Dist	COUNTY	ROUTE	POST MILES TOTAL PROJECT	SHEET No.	TOTAL SHEETS
05	SB	101	27.0/28.1	1	30

INDEX OF PLANS

SHEET No.	DESCRIPTION
1	TITLE AND LOCATION MAP
2	TYPICAL CROSS SECTIONS
3-7	LAYOUTS
8-9	CONSTRUCTION DETAILS
10-15	DRAINAGE PROFILES, DETAILS AND QUANTITIES
16	CONSTRUCTION AREA SIGNS
17-18	PAVEMENT DELINEATION, SIGN DETAILS AND QUANTITIES
19-20	SUMMARY OF QUANTITIES
21-25	EROSION CONTROL PLAN, LEGEND AND QUANTITIES
26-30	REVISED STANDARD PLANS

THE STANDARD PLANS LIST APPLICABLE TO THIS CONTRACT IS INCLUDED IN THE NOTICE TO BIDDERS AND SPECIAL PROVISIONS BOOK.

STATE OF CALIFORNIA

DEPARTMENT OF TRANSPORTATION

ACHSNHP-Q101(240)E

PROJECT PLANS FOR CONSTRUCTION ON

STATE HIGHWAY

IN SANTA BARBARA COUNTY
IN AND NEAR GOLETA
FROM 0.2 MILE NORTH OF CATHEDRAL OAKS ROAD OVERCROSSING TO 2 MILES SOUTH OF DOS PUEBLOS CREEK UNDERCROSSING

TO BE SUPPLEMENTED BY STANDARD PLANS DATED 2010

LOCATION MAP

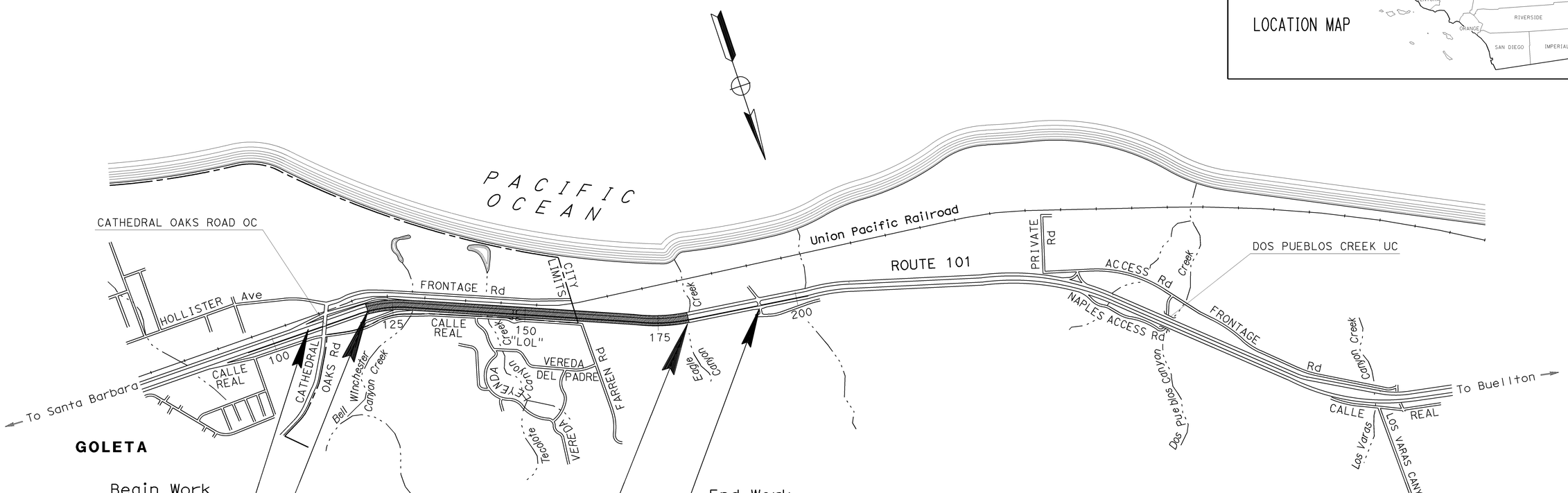

NO SCALE

Michael O'Neal 11-18-13
PROJECT ENGINEER DATE
REGISTERED CIVIL ENGINEER

REGISTERED PROFESSIONAL ENGINEER
MICHAEL A. O'NEAL
No. 81051
Exp. 9-30-15
CIVIL
STATE OF CALIFORNIA

November 18, 2013
PLANS APPROVAL DATE

THE STATE OF CALIFORNIA OR ITS OFFICERS OR AGENTS SHALL NOT BE RESPONSIBLE FOR THE ACCURACY OR COMPLETENESS OF SCANNED COPIES OF THIS PLAN SHEET.

PROJECT MANAGER: DAVID BEARD
DESIGN ENGINEER: STEVEN WYATT

THE CONTRACTOR SHALL POSSESS THE CLASS (OR CLASSES) OF LICENSE AS SPECIFIED IN THE "NOTICE TO BIDDERS."

CONTRACT No.	05-1C3404
PROJECT ID	0512000120

DATE PLOTTED => 08-JAN-2014
TIME PLOTTED => 10:33
LAST REVISION => 11-18-13

Dist	COUNTY	ROUTE	POST MILES TOTAL PROJECT	SHEET No.	TOTAL SHEETS
05	SB	101	27.0/28.1	2	30

Michael O'Neal 11-18-13
REGISTERED CIVIL ENGINEER DATE

11-18-13
PLANS APPROVAL DATE

REGISTERED PROFESSIONAL ENGINEER — MICHAEL A. O'NEAL — No. 81051 — Exp. 9-30-15 — CIVIL — STATE OF CALIFORNIA

THE STATE OF CALIFORNIA OR ITS OFFICERS OR AGENTS SHALL NOT BE RESPONSIBLE FOR THE ACCURACY OR COMPLETENESS OF SCANNED COPIES OF THIS PLAN SHEET.

NOTES:

1. DIMENSIONS OF THE PAVEMENT STRUCTURES (STRUCTURAL SECTIONS) ARE SUBJECT TO TOLERANCES SPECIFIED IN THE STANDARD SPECIFICATIONS.
2. FOR EXACT LOCATIONS OF RUMBLE STRIPS SEE LAYOUTS.

ABBREVIATIONS:

SC SAW CUT
BB PROFILE GRADE AT BOTTOM OF BARRIER

PAVEMENT CLIMATE REGION

SOUTH COAST

TYPICAL PAVEMENT STRUCTURAL SECTIONS

[1] Exist 0.40' AC / 0.67' PCC / 0.80' AB
[2] Exist 0.40' AC / 1.50' AB
[3] 0.40' HMA (TYPE A) / 0.80' Cl 2 AB
[4] 0.50' LCB

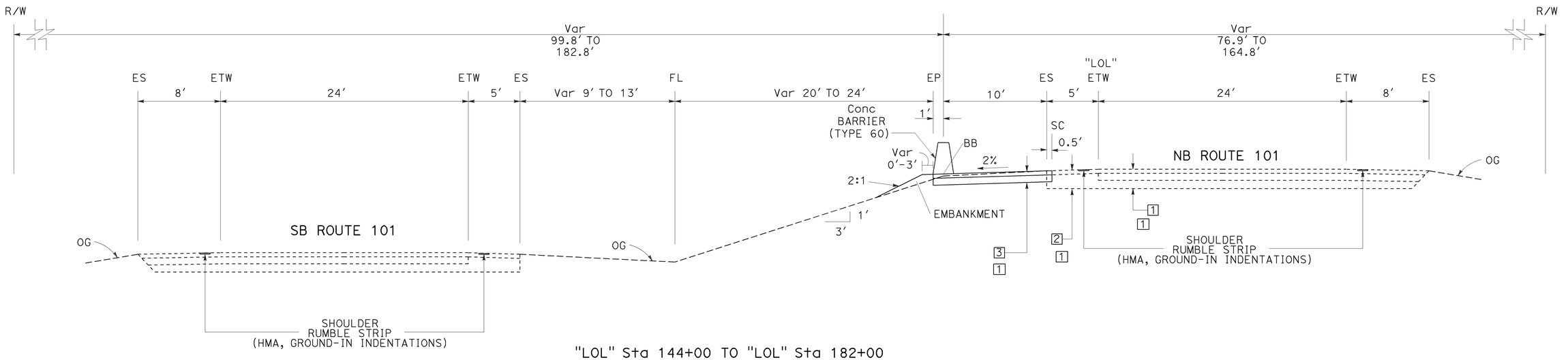

"LOL" Sta 144+00 TO "LOL" Sta 182+00

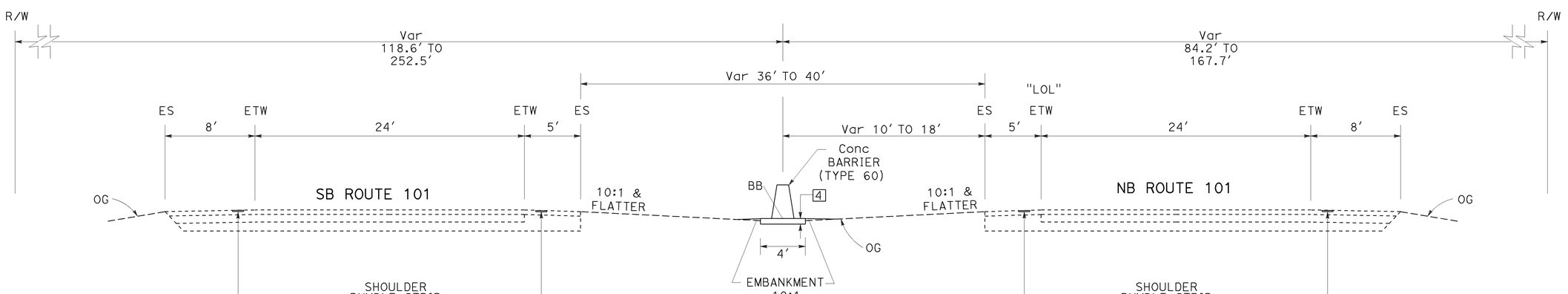

"LOL" Sta 119+41 TO "LOL" Sta 144+00

ROUTE 101

DESIGN DESIGNATION

ADT (2010) = 31,500	D = 64.5
ADT (2023) = 42,568	T = 11%
DHV = 4,650	V = 70 MPH
TI20 = 13	

TYPICAL CROSS SECTIONS

NO SCALE

X-1

REVISED BY | DATE REVISED
MICHAEL O'NEAL | CHRISTOPHER MANCINI
CALCULATED-DESIGNED BY | CHECKED BY
FUNCTIONAL SUPERVISOR: STEVEN WYATT
STATE OF CALIFORNIA - DEPARTMENT OF TRANSPORTATION
DESIGN
Caltrans

LAST REVISION | DATE PLOTTED => 08-JAN-2014
11-18-13 | TIME PLOTTED => 10:33

Dist	COUNTY	ROUTE	POST MILES TOTAL PROJECT	SHEET No.	TOTAL SHEETS
05	SB	101	27.0/28.1	3	30

Michael O'Neal 11-18-13
REGISTERED CIVIL ENGINEER DATE

11-18-13
PLANS APPROVAL DATE

MICHAEL A. O'NEAL No. 81051 Exp. 9-30-15 CIVIL — REGISTERED PROFESSIONAL ENGINEER — STATE OF CALIFORNIA

THE STATE OF CALIFORNIA OR ITS OFFICERS OR AGENTS SHALL NOT BE RESPONSIBLE FOR THE ACCURACY OR COMPLETENESS OF SCANNED COPIES OF THIS PLAN SHEET.

NOTES:

1. FOR ACCURATE RIGHT OF WAY DATA, CONTACT RIGHT OF WAY ENGINEERING AT THE DISTRICT OFFICE.
2. UTILITY OWNERSHIP ON THIS PROJECT; OIL = ELLWOOD PIPELINE Inc, GAS = SOUTHERN CALIFORNIA GAS COMPANY, FIBER OPTIC = LEVEL 3, WATER = GOLETA WATER DISTRICT.
3. EXACT LOCATIONS OF WILDLIFE PASSAGEWAYS (TYPE S) SHOWN ON Q-2.

ABBREVIATIONS:

BB PROFILE GRADE AT BOTTOM CENTER OF BARRIER
SC SAW CUT

LEGEND:

- REMOVE ROADSIDE SIGN
- RELOCATE ROADSIDE SIGN
- RESET ROADSIDE SIGN

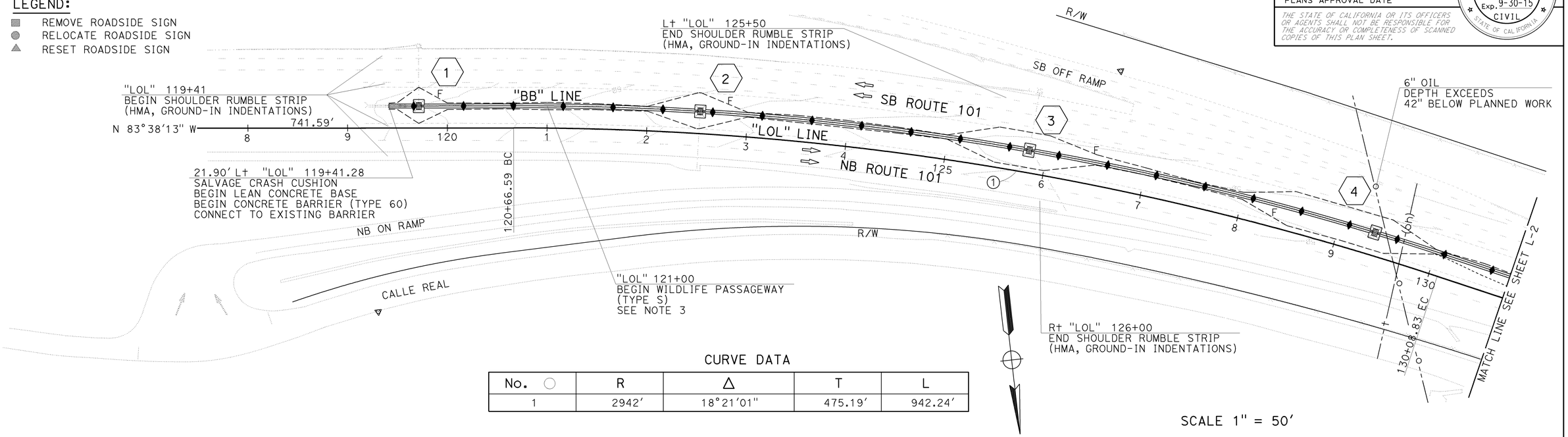

CURVE DATA

No. ○	R	Δ	T	L
1	2942'	18°21'01"	475.19'	942.24'

SCALE 1" = 50'

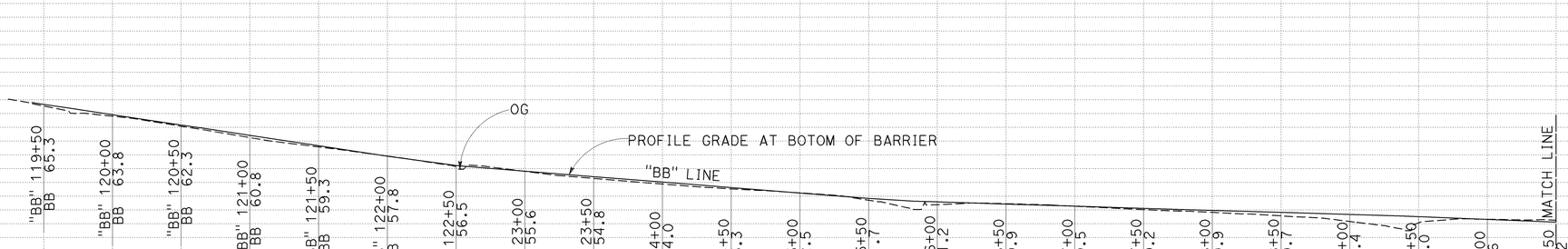

PROFILE "BB" LINE ROUTE 101

SCALE: Horiz 1" = 50'
Vert 1" = 10'

LAYOUT L-1

STATION	119+00	120+00	121+00	122+00	123+00	124+00	125+00	126+00	127+00	128+00	129+00	130+00	TOTAL
CY Exc	◄					53.2						►	53.2
CY Emb	◄					136.1						►	136.1

STATE OF CALIFORNIA - DEPARTMENT OF TRANSPORTATION
Caltrans® DESIGN
FUNCTIONAL SUPERVISOR: STEVEN WYATT
CALCULATED-DESIGNED BY: MICHAEL O'NEAL
CHECKED BY: CHRISTOPHER MANCINI
REVISED BY / DATE REVISED
LAST REVISION DATE PLOTTED => 08-JAN-2014
TIME PLOTTED => 10:33

BORDER LAST REVISED 7/2/2010
USERNAME => s123239
DGN FILE => 0512000120ea001.dgn
RELATIVE BORDER SCALE IS IN INCHES 0 1 2 3
UNIT 1450
PROJECT NUMBER & PHASE 05120001201

Dist	COUNTY	ROUTE	POST MILES TOTAL PROJECT	SHEET No.	TOTAL SHEETS
05	SB	101	27.0/28.1	4	30

Michael O'Neal 11-18-13
REGISTERED CIVIL ENGINEER DATE

11-18-13
PLANS APPROVAL DATE

THE STATE OF CALIFORNIA OR ITS OFFICERS OR AGENTS SHALL NOT BE RESPONSIBLE FOR THE ACCURACY OR COMPLETENESS OF SCANNED COPIES OF THIS PLAN SHEET.

REGISTERED PROFESSIONAL ENGINEER
MICHAEL A. O'NEAL
No. 81051
Exp. 9-30-15
CIVIL
STATE OF CALIFORNIA

NOTE:

FOR ACCURATE RIGHT OF WAY DATA, CONTACT
RIGHT OF WAY ENGINEERING AT THE DISTRICT OFFICE.

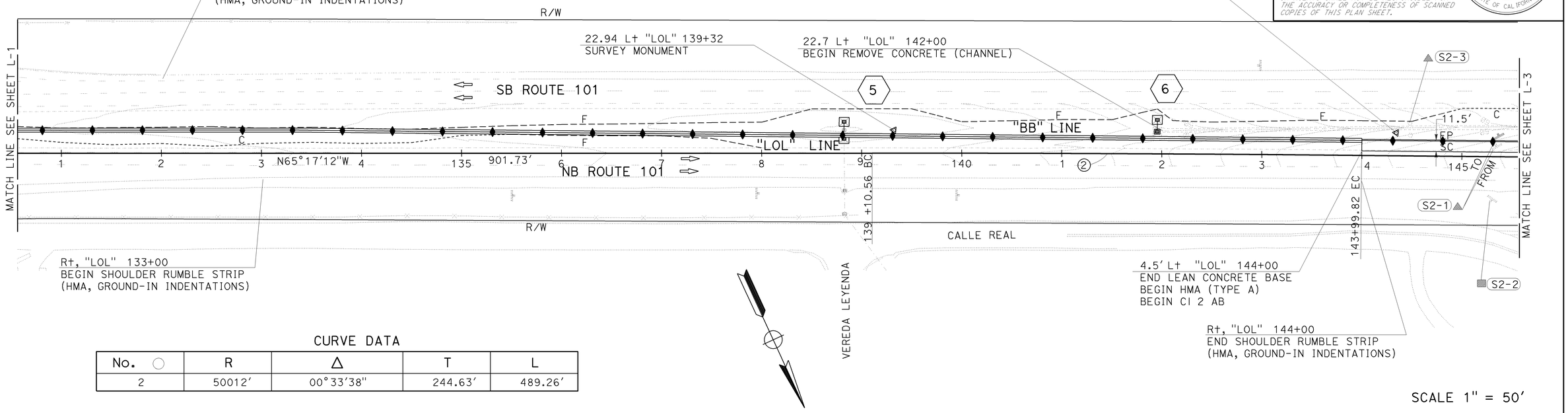

SCALE 1" = 50'

CURVE DATA

No. ○	R	Δ	T	L
2	50012′	00°33′38"	244.63′	489.26′

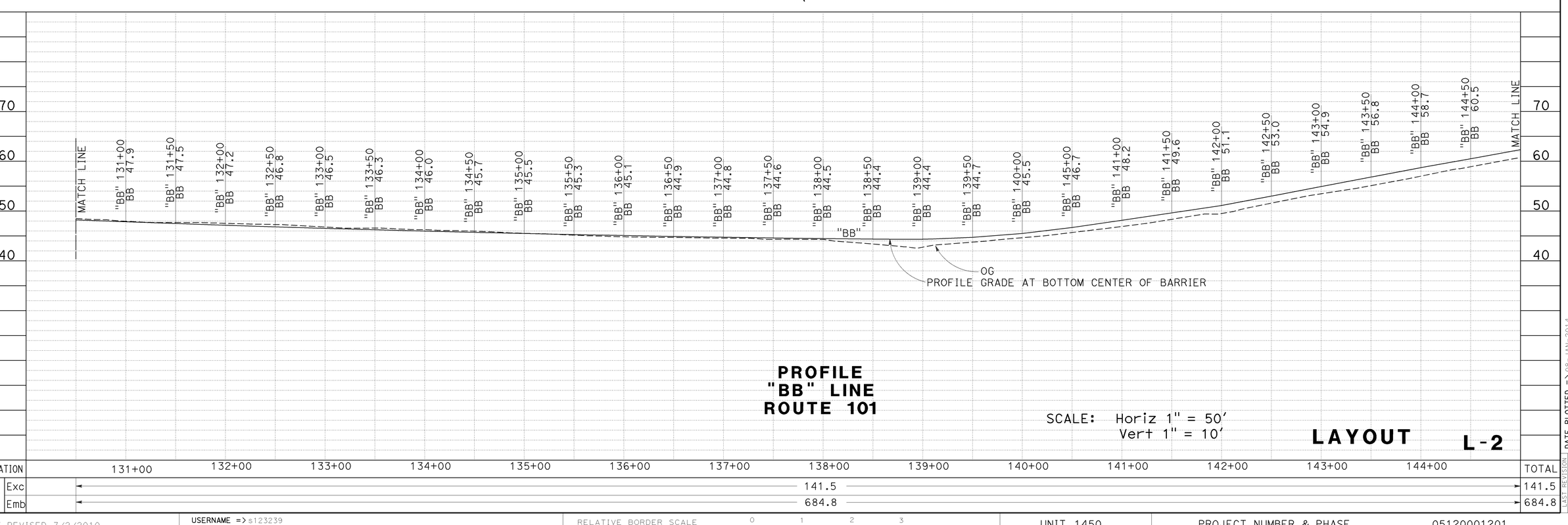

PROFILE
"BB" LINE
ROUTE 101

SCALE: Horiz 1" = 50′
Vert 1" = 10′

LAYOUT **L-2**

STATION		131+00	132+00	133+00	134+00	135+00	136+00	137+00	138+00	139+00	140+00	141+00	142+00	143+00	144+00	TOTAL
CY	Exc	◄													►	141.5
	Emb	◄													►	684.8

STATE OF CALIFORNIA - DEPARTMENT OF TRANSPORTATION
DESIGN
FUNCTIONAL SUPERVISOR: STEVEN WYATT
CALCULATED-DESIGNED BY: MICHAEL O'NEAL
CHECKED BY: CHRISTOPHER MANCINI
REVISED BY
DATE REVISED
LAST REVISION
DATE PLOTTED => 08-JAN-2014
TIME PLOTTED => 10:33
11-18-13

BORDER LAST REVISED 7/2/2010
USERNAME => s123239
DGN FILE => 0512000120ea002.dgn
RELATIVE BORDER SCALE IS IN INCHES 0 1 2 3
UNIT 1450
PROJECT NUMBER & PHASE 05120001201

Dist	COUNTY	ROUTE	POST MILES TOTAL PROJECT	SHEET No.	TOTAL SHEETS
05	SB	101	27.0/28.1	5	30

Michael O'Neal 11-18-13
REGISTERED CIVIL ENGINEER DATE

11-18-13
PLANS APPROVAL DATE

REGISTERED PROFESSIONAL ENGINEER
MICHAEL A. O'NEAL
No. 81051
Exp. 9-30-15
CIVIL
STATE OF CALIFORNIA

THE STATE OF CALIFORNIA OR ITS OFFICERS OR AGENTS SHALL NOT BE RESPONSIBLE FOR THE ACCURACY OR COMPLETENESS OF SCANNED COPIES OF THIS PLAN SHEET.

NOTE:

FOR ACCURATE RIGHT OF WAY DATA, CONTACT RIGHT OF WAY ENGINEERING AT THE DISTRICT OFFICE.

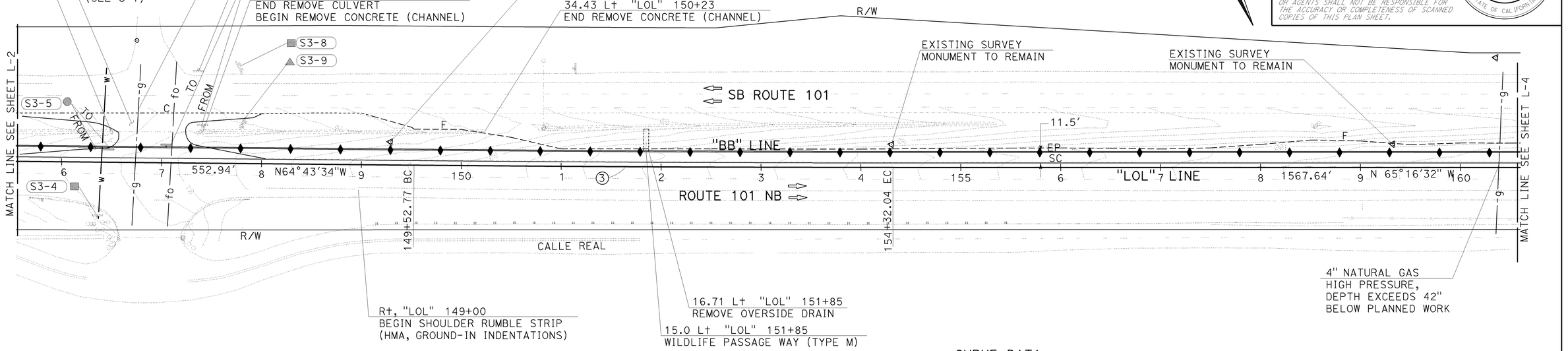

CURVE DATA

No. ○	R	Δ	T	L
3	49988′	00°32′58"	239.64′	479.27′

SCALE 1" = 50′

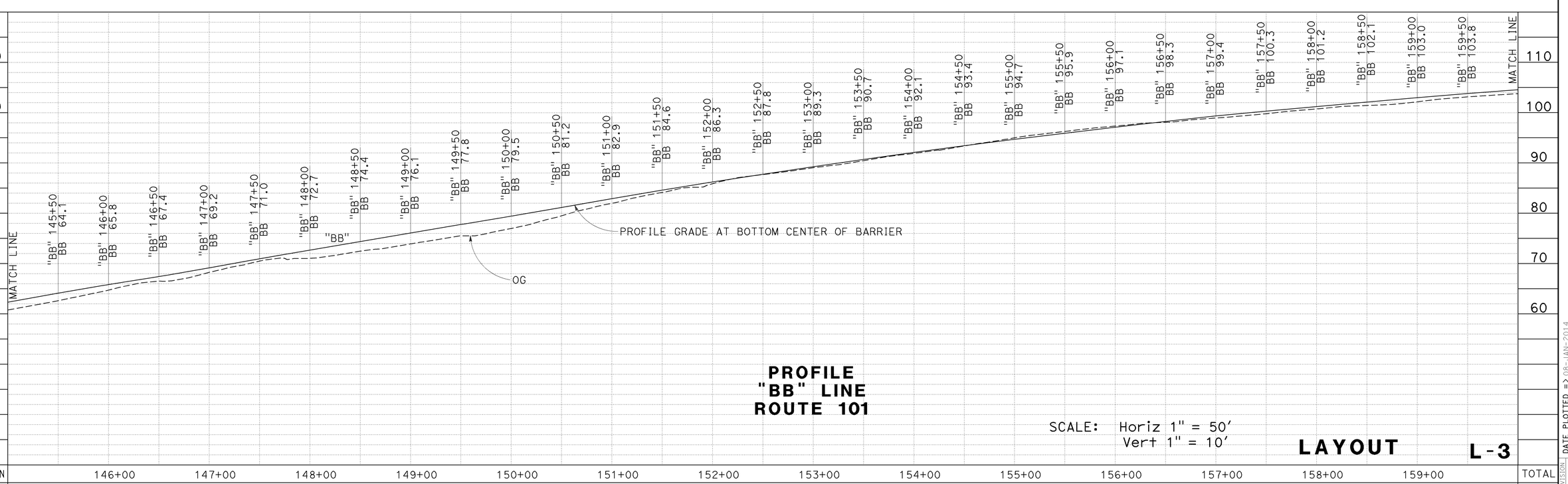

STATION	146+00	147+00	148+00	149+00	150+00	151+00	152+00	153+00	154+00	155+00	156+00	157+00	158+00	159+00	TOTAL
CY Exc	←														685.2 →
CY Emb	←														481.2 →

PROFILE "BB" LINE ROUTE 101

SCALE: Horiz 1" = 50′
Vert 1" = 10′

LAYOUT **L-3**

REVISED BY | DATE REVISED
MICHAEL O'NEAL | CHRISTOPHER MANCINI
CALCULATED-DESIGNED BY | CHECKED BY
FUNCTIONAL SUPERVISOR: STEVEN WYATT
STATE OF CALIFORNIA - DEPARTMENT OF TRANSPORTATION
Caltrans® DESIGN

LAST REVISION DATE PLOTTED => 08-JAN-2014
TIME PLOTTED => 10:33
11-18-13

BORDER LAST REVISED 7/2/2010
USERNAME => s123239
DGN FILE => 0512000120ea003.dgn
RELATIVE BORDER SCALE IS IN INCHES 0 1 2 3
UNIT 1450
PROJECT NUMBER & PHASE 05120001201

Dist	COUNTY	ROUTE	POST MILES TOTAL PROJECT	SHEET No.	TOTAL SHEETS
05	SB	101	27.0/28.1	6	30

Michael O'Neal 11-18-13
REGISTERED CIVIL ENGINEER DATE

11-18-13
PLANS APPROVAL DATE

MICHAEL A. O'NEAL No. 81051 Exp. 9-30-15 CIVIL — REGISTERED PROFESSIONAL ENGINEER — STATE OF CALIFORNIA

THE STATE OF CALIFORNIA OR ITS OFFICERS OR AGENTS SHALL NOT BE RESPONSIBLE FOR THE ACCURACY OR COMPLETENESS OF SCANNED COPIES OF THIS PLAN SHEET.

NOTE:

FOR ACCURATE RIGHT OF WAY DATA, CONTACT RIGHT OF WAY ENGINEERING AT THE DISTRICT OFFICE.

CURVE DATA

No. ◯	R	Δ	T	L
4	4988′	16°05′17"	704.93′	1400.58′

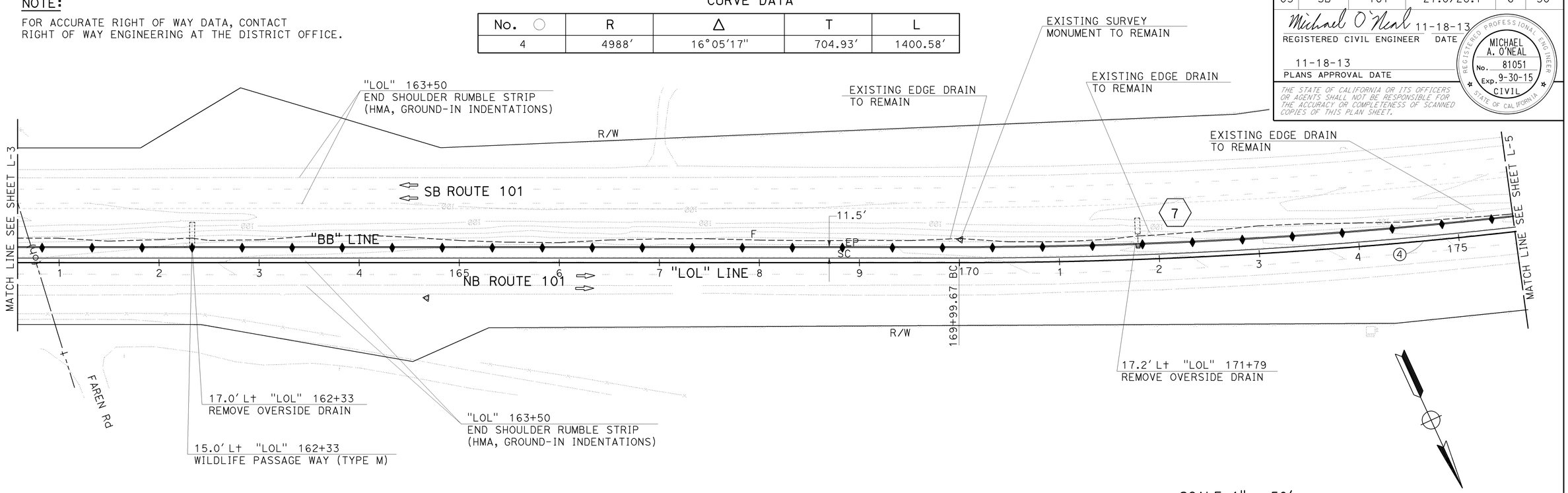

SCALE 1" = 50′

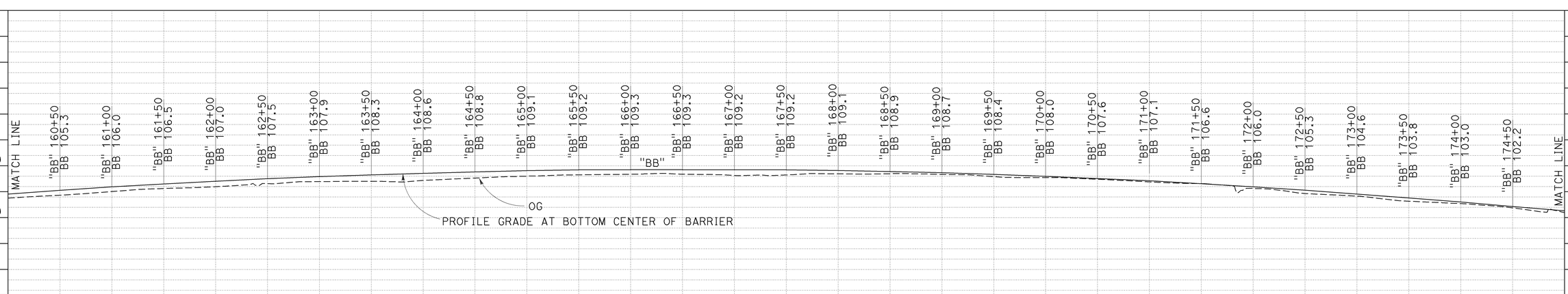

PROFILE
"BB" LINE
ROUTE 101

SCALE: Horiz 1" = 50′
Vert 1" = 10′

LAYOUT L-4

STATION		161+00	162+00	163+00	164+00	165+00	166+00	167+00	168+00	169+00	170+00	171+00	172+00	173+00	174+00	TOTAL
CY	Exc	←							467.7						→	467.7
	Emb	←							221.4						→	221.4

STATE OF CALIFORNIA - DEPARTMENT OF TRANSPORTATION
DESIGN
FUNCTIONAL SUPERVISOR: STEVEN WYATT
CALCULATED-DESIGNED BY: MICHAEL O'NEAL
CHECKED BY: CHRISTOPHER MANCINI
REVISED BY
DATE REVISED

LAST REVISION
DATE PLOTTED => 08-JAN-2014
TIME PLOTTED => 10:33
11-18-13

BORDER LAST REVISED 7/2/2010
USERNAME => s123239
DGN FILE => 0512000120ea004.dgn
RELATIVE BORDER SCALE IS IN INCHES 0 1 2 3
UNIT 1450
PROJECT NUMBER & PHASE 05120001201

Dist	COUNTY	ROUTE	POST MILES TOTAL PROJECT	SHEET No.	TOTAL SHEETS
05	SB	101	27.0/28.1	7	30

Michael O'Neal 11-18-13
REGISTERED CIVIL ENGINEER DATE

11-18-13
PLANS APPROVAL DATE

REGISTERED PROFESSIONAL ENGINEER
MICHAEL A. O'NEAL
No. 81051
Exp. 9-30-15
CIVIL
STATE OF CALIFORNIA

THE STATE OF CALIFORNIA OR ITS OFFICERS OR AGENTS SHALL NOT BE RESPONSIBLE FOR THE ACCURACY OR COMPLETENESS OF SCANNED COPIES OF THIS PLAN SHEET.

NOTE:

FOR ACCURATE RIGHT OF WAY DATA, CONTACT
RIGHT OF WAY ENGINEERING AT THE DISTRICT OFFICE.

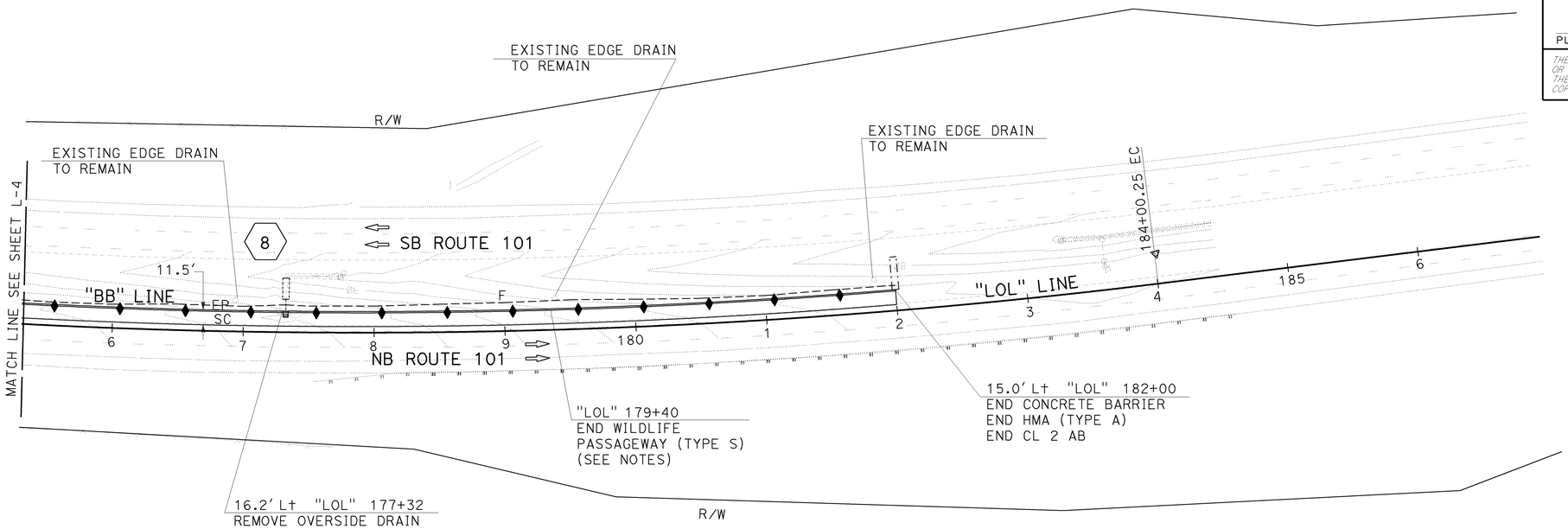

SCALE 1" = 50'

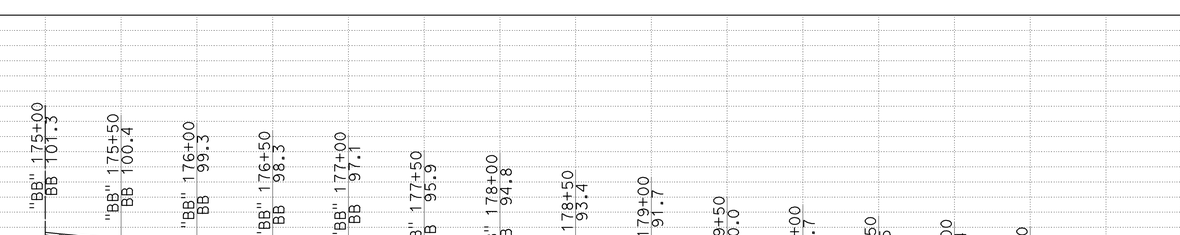

PROFILE
"BB" LINE
ROUTE 101

SCALE: Horiz 1" = 50'
Vert 1" = 10'

LAYOUT **L-5**

STATION		175+00	176+00	177+00	178+00	179+00	180+00	181+00	182+00	TOTAL
CY	Exc	← 270.1 →								270.1
	Emb	← 36.1 →								36.1

STATE OF CALIFORNIA - DEPARTMENT OF TRANSPORTATION
Caltrans®
DESIGN
FUNCTIONAL SUPERVISOR: STEVEN WYATT
CALCULATED-DESIGNED BY: MICHAEL O'NEAL
CHECKED BY: CHRISTOPHER MANCINI
REVISED BY
DATE REVISED

LAST REVISION DATE PLOTTED => 08-JAN-2014
TIME PLOTTED => 10:33
11-18-13

BORDER LAST REVISED 7/2/2010
USERNAME => s123239
DGN FILE => 0512000120ea005.dgn
RELATIVE BORDER SCALE IS IN INCHES 0 1 2 3
UNIT 1450
PROJECT NUMBER & PHASE 05120001201

Dist	COUNTY	ROUTE	POST MILES TOTAL PROJECT	SHEET No.	TOTAL SHEETS
05	SB	101	27.0/28.1	8	30

Michael O'Neal 11-18-13
REGISTERED CIVIL ENGINEER DATE

11-18-13
PLANS APPROVAL DATE

REGISTERED PROFESSIONAL ENGINEER
MICHAEL A. O'NEAL
No. 81051
Exp. 9-30-15
CIVIL
STATE OF CALIFORNIA

THE STATE OF CALIFORNIA OR ITS OFFICERS OR AGENTS SHALL NOT BE RESPONSIBLE FOR THE ACCURACY OR COMPLETENESS OF SCANNED COPIES OF THIS PLAN SHEET.

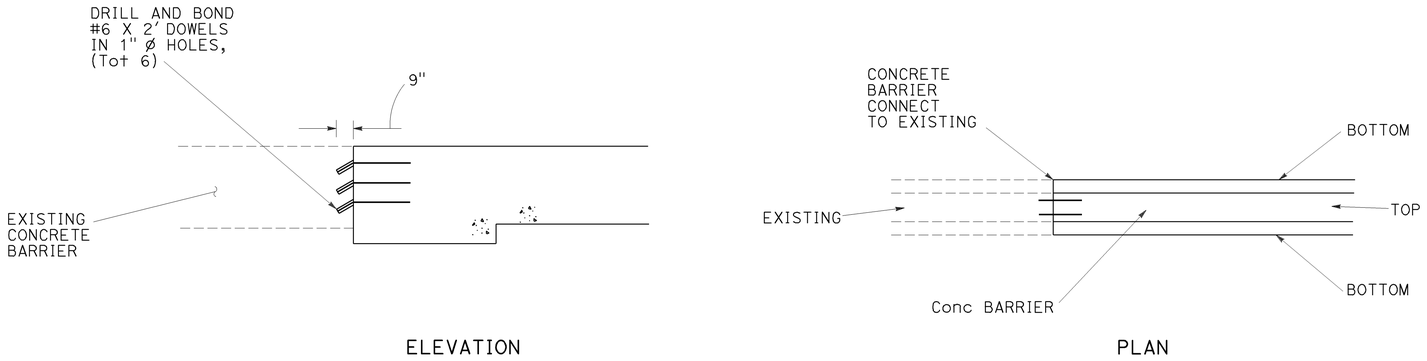

ELEVATION PLAN

CONCRETE BARRIER CONNECT TO EXISTING

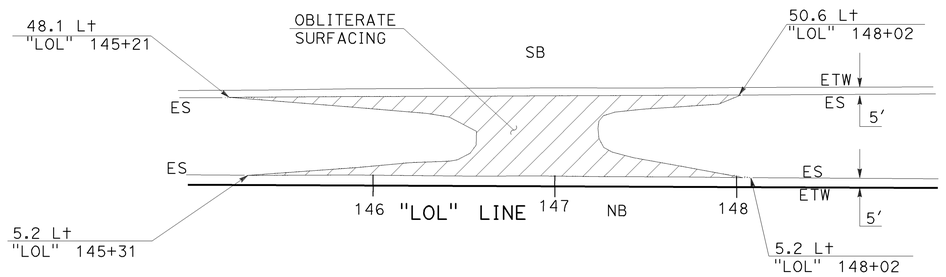

OBLITERATE SURFACING

NO SCALE

CONSTRUCTION DETAILS

C-1

STATE OF CALIFORNIA - DEPARTMENT OF TRANSPORTATION
DESIGN
FUNCTIONAL SUPERVISOR: STEVEN WYATT
CALCULATED-DESIGNED BY: MICHAEL O'NEAL
CHECKED BY: CHRISTOPHER MANCINI
REVISED BY
DATE REVISED

LAST REVISION DATE PLOTTED => 08-JAN-2014
11-18-13 TIME PLOTTED => 10:33

BORDER LAST REVISED 7/2/2010
USERNAME => s123239
DGN FILE => 0512000120ga001.dgn
RELATIVE BORDER SCALE IS IN INCHES 0 1 2 3
UNIT 1450
PROJECT NUMBER & PHASE 05120001201

Dist	COUNTY	ROUTE	POST MILES TOTAL PROJECT	SHEET No.	TOTAL SHEETS
05	SB	101	27.0/28.1	9	30

Michael O'Neal 11-18-13
REGISTERED CIVIL ENGINEER DATE

11-18-13
PLANS APPROVAL DATE

MICHAEL A. O'NEAL No. 81051 Exp. 9-30-15 CIVIL — REGISTERED PROFESSIONAL ENGINEER — STATE OF CALIFORNIA

THE STATE OF CALIFORNIA OR ITS OFFICERS OR AGENTS SHALL NOT BE RESPONSIBLE FOR THE ACCURACY OR COMPLETENESS OF SCANNED COPIES OF THIS PLAN SHEET.

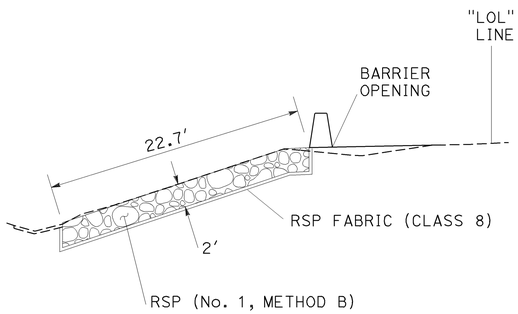

SECTION A-A

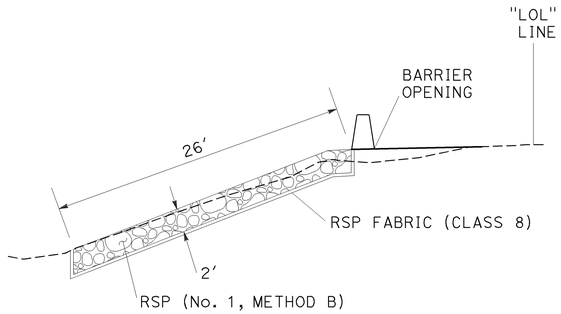

SECTION B-B

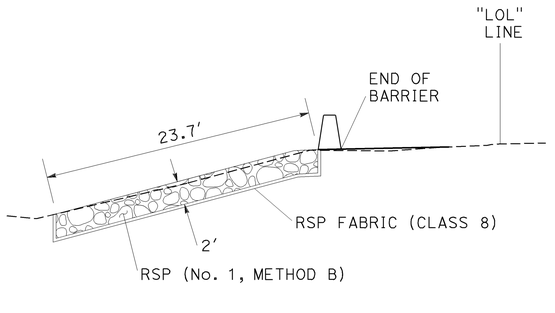

SECTION C-C

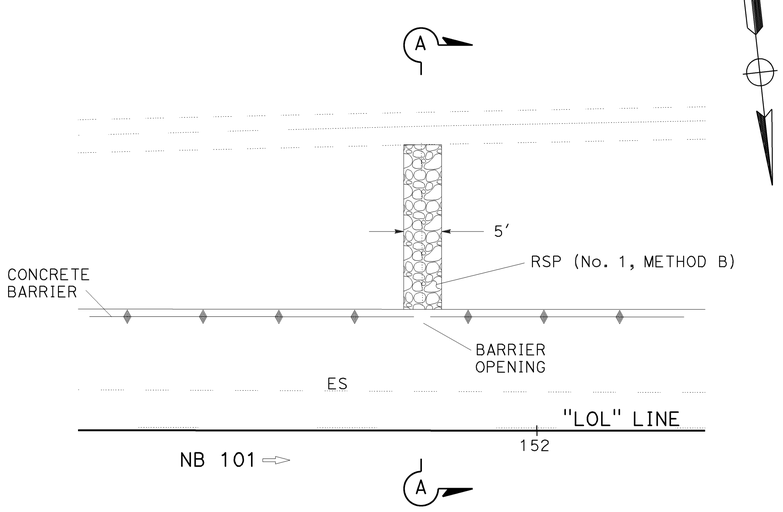

"LOL" Sta 151+85

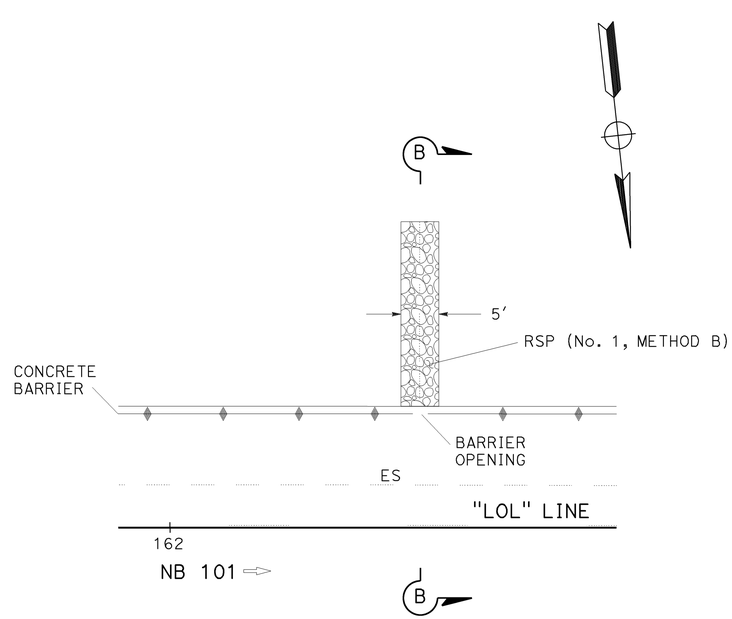

"LOL" Sta 162+33

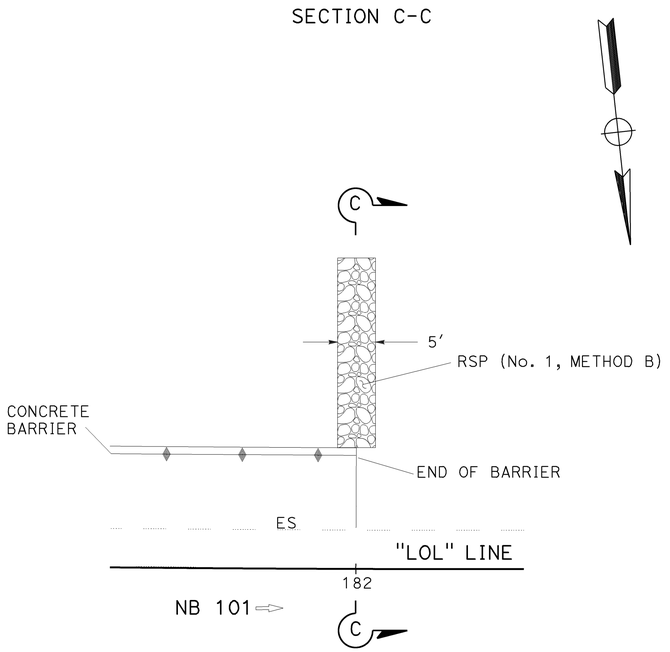

"LOL" Sta 182+00

BARRIER OPENING/END OF BARRIER RSP (No. 1, METHOD B)

CONSTRUCTION DETAILS

NO SCALE

C-2

STATE OF CALIFORNIA - DEPARTMENT OF TRANSPORTATION
DESIGN
FUNCTIONAL SUPERVISOR: STEVEN WYATT
CALCULATED-DESIGNED BY: MICHAEL O'NEAL
CHECKED BY: CHRISTOPHER MANCINI
REVISED BY / DATE REVISED

LAST REVISION 11-18-13
DATE PLOTTED => 08-JAN-2014
TIME PLOTTED => 10:33

BORDER LAST REVISED 7/2/2010
USERNAME => s123239
DGN FILE => 0512000120ga002.dgn
RELATIVE BORDER SCALE IS IN INCHES 0 1 2 3
UNIT 1450
PROJECT NUMBER & PHASE 05120001201

Dist	COUNTY	ROUTE	POST MILES TOTAL PROJECT	SHEET No.	TOTAL SHEETS
05	SB	101	27.0/28.1	10	30

Michael O'Neal 11-18-13
REGISTERED CIVIL ENGINEER DATE

11-18-13
PLANS APPROVAL DATE

MICHAEL A. O'NEAL No. 81051 Exp. 9-30-15 CIVIL — REGISTERED PROFESSIONAL ENGINEER — STATE OF CALIFORNIA

THE STATE OF CALIFORNIA OR ITS OFFICERS OR AGENTS SHALL NOT BE RESPONSIBLE FOR THE ACCURACY OR COMPLETENESS OF SCANNED COPIES OF THIS PLAN SHEET.

NOTES:

1. SEE DRAINAGE DETAILS.
2. ALL DRAINAGE STRUCTURES ARE RADIAL TO THE REFERENCED ALIGNMNET UNLESS OTHERWISE SHOWN.

ABBREVIATIONS:

COB CENTER OF BOX

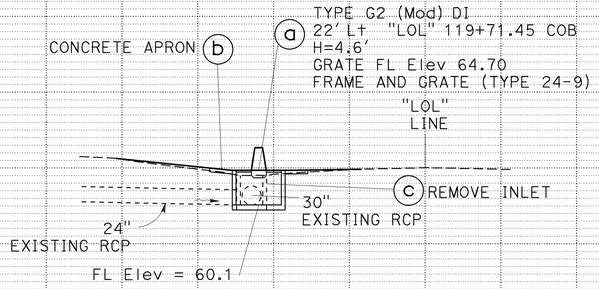

DRAINAGE SYSTEM No. 1
"LOL" Sta 119+71.45

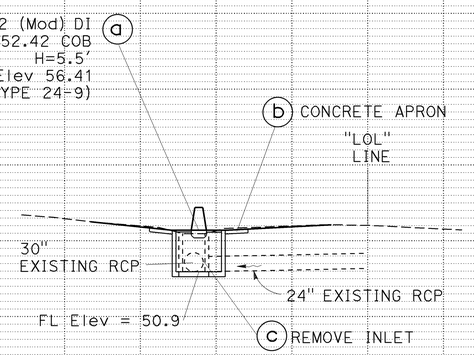

DRAINAGE SYSTEM No. 2
"LOL" Sta 122+52.42

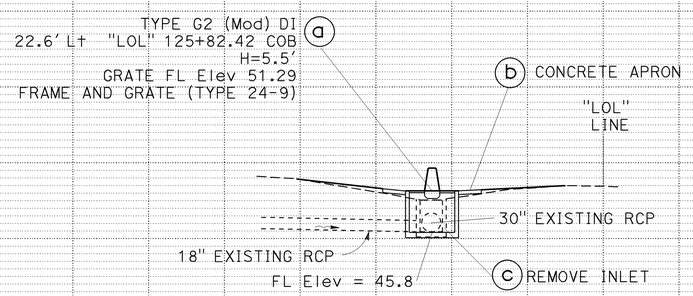

DRAINAGE SYSTEM No. 3
"LOL" Sta 125+82.42

APPROVED FOR DRAINAGE WORK ONLY

DRAINAGE PROFILES

SCALE: Horiz 1" = 10'
Vert 1" = 10'

DP-1

STATE OF CALIFORNIA - DEPARTMENT OF TRANSPORTATION
DESIGN
FUNCTIONAL SUPERVISOR: STEVEN WYATT
CALCULATED-DESIGNED BY: MICHAEL O'NEAL
CHECKED BY: CHRISTOPHER MANCINI
REVISED BY
DATE REVISED

LAST REVISION DATE PLOTTED => 08-JAN-2014
11-18-13 TIME PLOTTED => 10:33

BORDER LAST REVISED 7/2/2010
USERNAME => s123239
DGN FILE => 05120001201b001.dgn
RELATIVE BORDER SCALE IS IN INCHES 0 1 2 3
UNIT 1450
PROJECT NUMBER & PHASE 05120001201

Dist	COUNTY	ROUTE	POST MILES TOTAL PROJECT	SHEET No.	TOTAL SHEETS
05	SB	101	27.0/28.1	11	30

Michael O'Neal 11-18-13
REGISTERED CIVIL ENGINEER DATE

11-18-13
PLANS APPROVAL DATE

REGISTERED PROFESSIONAL ENGINEER
MICHAEL A. O'NEAL
No. 81051
Exp. 9-30-15
CIVIL
STATE OF CALIFORNIA

THE STATE OF CALIFORNIA OR ITS OFFICERS OR AGENTS SHALL NOT BE RESPONSIBLE FOR THE ACCURACY OR COMPLETENESS OF SCANNED COPIES OF THIS PLAN SHEET.

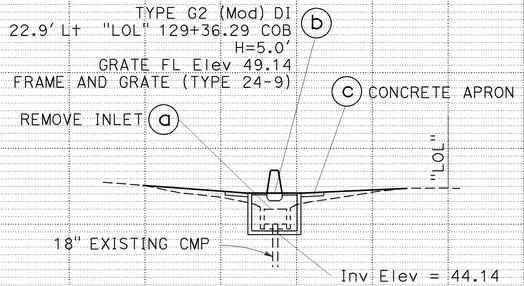

DRAINAGE SYSTEM No. 4

"LOL" Sta 129+36.29

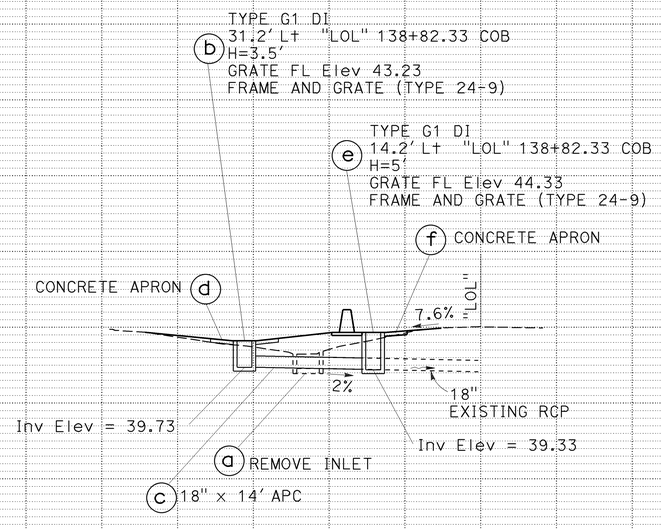

DRAINAGE SYSTEM No. 5

"LOL" Sta 138+82.33

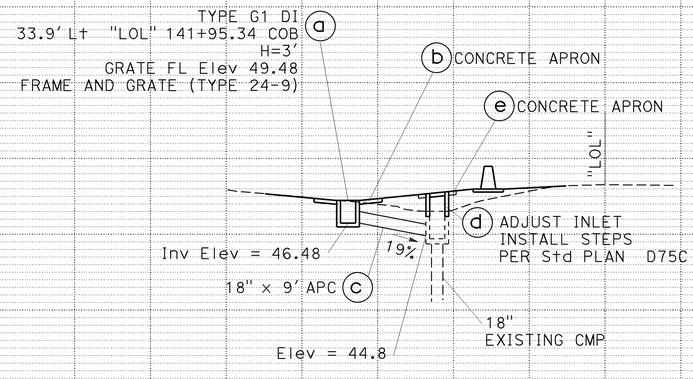

DRAINAGE SYSTEM No. 6

"LOL" Sta 141+95.34

APPROVED FOR DRAINAGE WORK ONLY

DRAINAGE PROFILES

SCALE: Horiz 1" = 10'
Vert 1" = 10'

DP-2

STATE OF CALIFORNIA - DEPARTMENT OF TRANSPORTATION
DESIGN
FUNCTIONAL SUPERVISOR: STEVEN WYATT
CALCULATED-DESIGNED BY: MICHAEL O'NEAL
CHECKED BY: CHRISTOPHER MANCINI
REVISED BY
DATE REVISED

LAST REVISION DATE PLOTTED => 08-JAN-2014
TIME PLOTTED => 10:33
11-18-13

BORDER LAST REVISED 7/2/2010
USERNAME => s123239
DGN FILE => 05120001201b002.dgn
RELATIVE BORDER SCALE IS IN INCHES 0 1 2 3
UNIT 1450
PROJECT NUMBER & PHASE 05120001201

Dist	COUNTY	ROUTE	POST MILES TOTAL PROJECT	SHEET No.	TOTAL SHEETS
05	SB	101	27.0/28.1	12	30

Michael O'Neal 11-18-13
REGISTERED CIVIL ENGINEER DATE

11-18-13
PLANS APPROVAL DATE

MICHAEL A. O'NEAL No. 81051 Exp. 9-30-15 CIVIL — REGISTERED PROFESSIONAL ENGINEER — STATE OF CALIFORNIA

THE STATE OF CALIFORNIA OR ITS OFFICERS OR AGENTS SHALL NOT BE RESPONSIBLE FOR THE ACCURACY OR COMPLETENESS OF SCANNED COPIES OF THIS PLAN SHEET.

CALCULATED-DESIGNED BY: MICHAEL O'NEAL
CHECKED BY: CHRISTOPHER MANCINI
REVISED BY / DATE REVISED
FUNCTIONAL SUPERVISOR: STEVEN WYATT
STATE OF CALIFORNIA - DEPARTMENT OF TRANSPORTATION
DESIGN

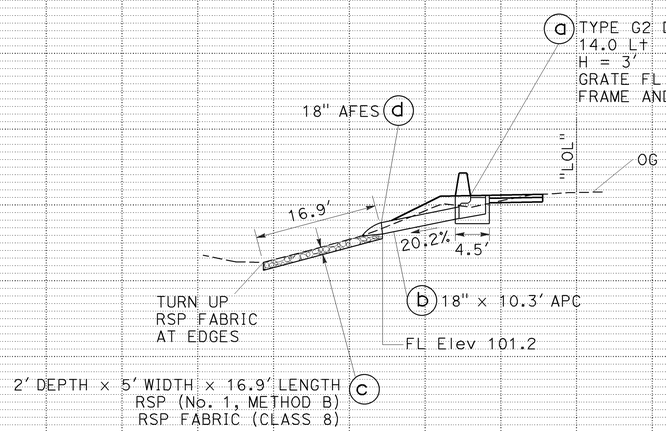

DRAINAGE SYSTEM No. 7

"LOL" Sta 171+79.01

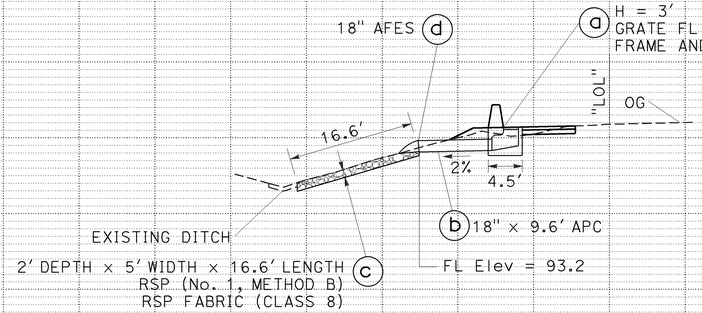

DRAINAGE SYSTEM No. 8

"LOL" Sta 177+32.25

APPROVED FOR DRAINAGE WORK ONLY

DRAINAGE PROFILES

SCALE: Horiz 1" = 10'
Vert 1" = 10'

DP-3

LAST REVISION | DATE PLOTTED => 08-JAN-2014
11-18-13 | TIME PLOTTED => 10:33

BORDER LAST REVISED 7/2/2010 | USERNAME => s123239 | DGN FILE => 05120001201b003.dgn | RELATIVE BORDER SCALE IS IN INCHES 0 1 2 3 | UNIT 1450 | PROJECT NUMBER & PHASE 05120001201

Dist	COUNTY	ROUTE	POST MILES TOTAL PROJECT	SHEET No.	TOTAL SHEETS
05	SB	101	27.0/28.1	13	30

Michael O'Neal 11-18-13
REGISTERED CIVIL ENGINEER DATE

11-18-13
PLANS APPROVAL DATE

REGISTERED PROFESSIONAL ENGINEER
MICHAEL A. O'NEAL
No. 81051
Exp. 9-30-15
CIVIL
STATE OF CALIFORNIA

THE STATE OF CALIFORNIA OR ITS OFFICERS OR AGENTS SHALL NOT BE RESPONSIBLE FOR THE ACCURACY OR COMPLETENESS OF SCANNED COPIES OF THIS PLAN SHEET.

NOTE:

FOR DETAILS NOT SHOWN SEE STANDARD PLAN D73

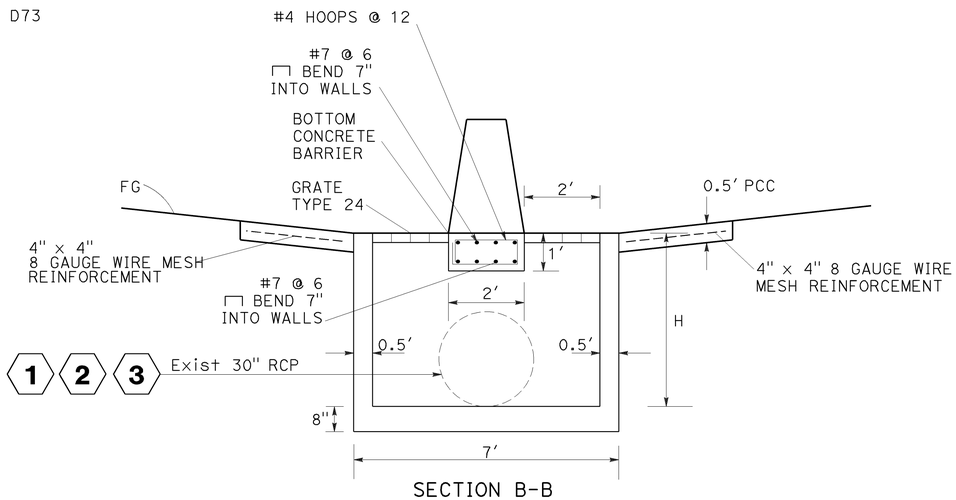

SECTION B-B

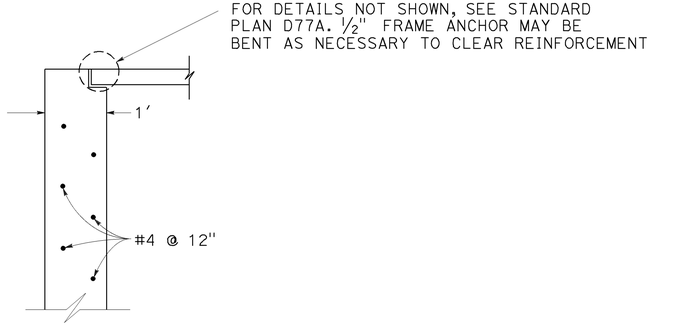

SECTION C-C

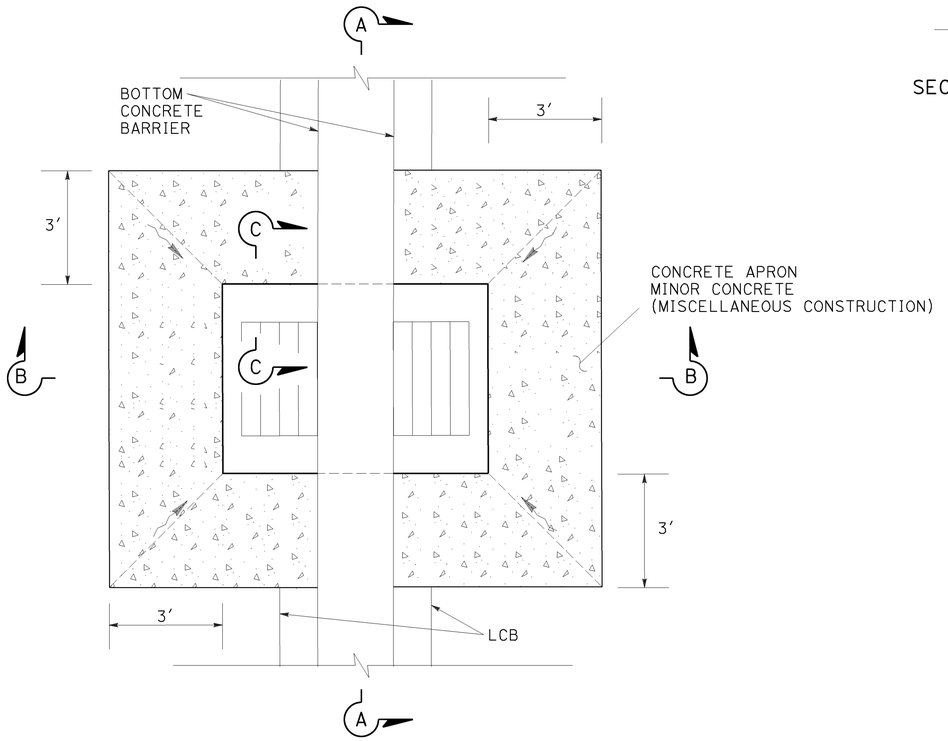

CONCRETE APRON DETAIL

1 b 2 b 3 b 4 c

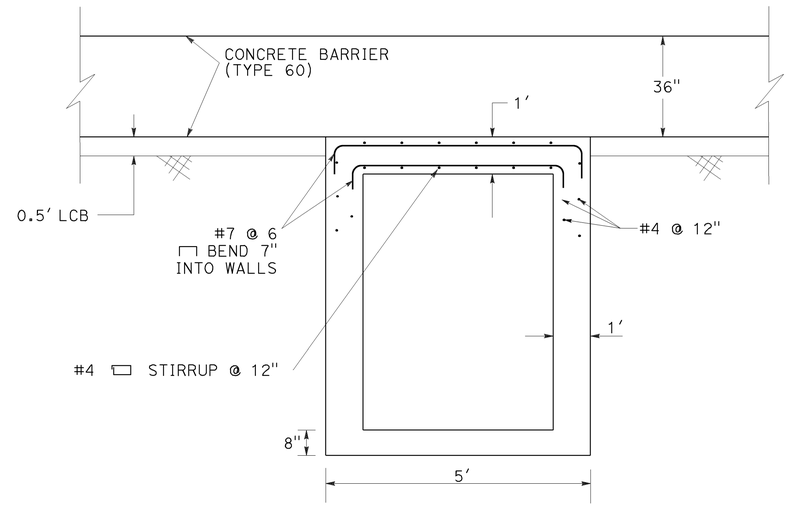

SECTION A-A

DRAINAGE DETAILS
DD-1

STATE OF CALIFORNIA - DEPARTMENT OF TRANSPORTATION
DESIGN
FUNCTIONAL SUPERVISOR: STEVEN WYATT
CALCULATED-DESIGNED BY: MICHAEL O'NEAL
CHECKED BY: CHRISTOPHER MANCINI
REVISED BY
DATE REVISED

LAST REVISION DATE PLOTTED => 08-JAN-2014
11-18-13 TIME PLOTTED => 10:33

BORDER LAST REVISED 7/2/2010
USERNAME => s123239
DGN FILE => 0512000120ic001.dgn
RELATIVE BORDER SCALE IS IN INCHES 0 1 2 3
UNIT 1450
PROJECT NUMBER & PHASE 05120001201

Dist	COUNTY	ROUTE	POST MILES TOTAL PROJECT	SHEET No.	TOTAL SHEETS
05	SB	101	27.0/28.1	14	30

Michael O'Neal 11-18-13
REGISTERED CIVIL ENGINEER DATE

11-18-13
PLANS APPROVAL DATE

REGISTERED PROFESSIONAL ENGINEER
MICHAEL A. O'NEAL
No. 81051
Exp. 9-30-15
CIVIL
STATE OF CALIFORNIA

THE STATE OF CALIFORNIA OR ITS OFFICERS OR AGENTS SHALL NOT BE RESPONSIBLE FOR THE ACCURACY OR COMPLETENESS OF SCANNED COPIES OF THIS PLAN SHEET.

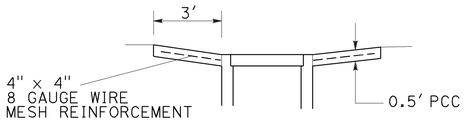

SECTION A-A

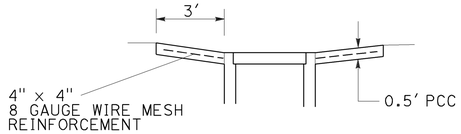

SECTION B-B

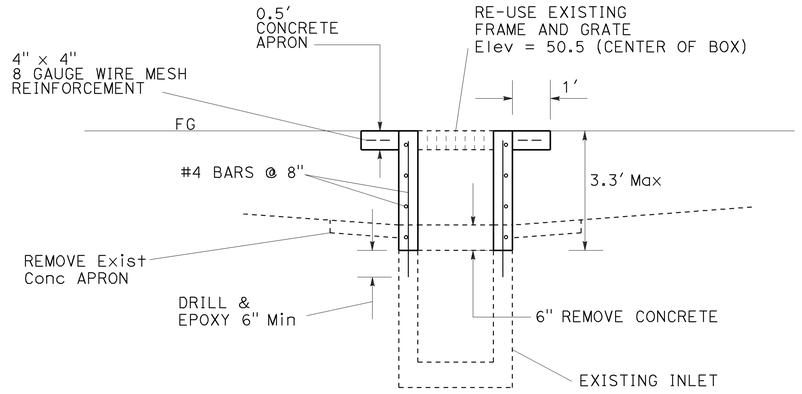

SECTION C-C

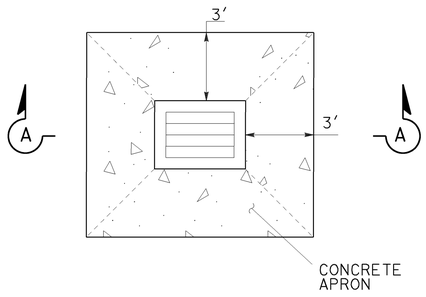

5 d 6 b

CONCRETE APRON

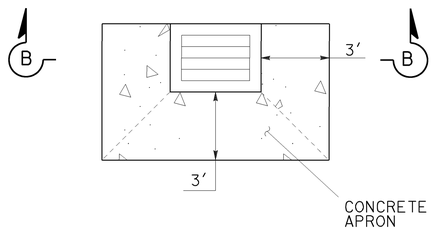

5 f

CONCRETE APRON

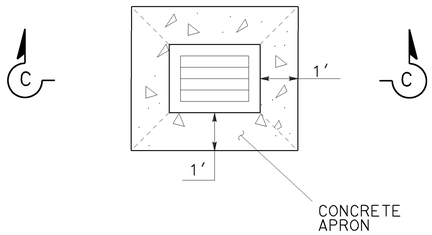

6

ADJUST INLET

DRAINAGE DETAILS
DD-2

NO SCALE

STATE OF CALIFORNIA - DEPARTMENT OF TRANSPORTATION
DESIGN
FUNCTIONAL SUPERVISOR: STEVEN WYATT
CALCULATED-DESIGNED BY
CHECKED BY
MICHAEL O'NEAL
CHRISTOPHER MANCINI
REVISED BY
DATE REVISED

LAST REVISION: DATE PLOTTED => 08-JAN-2014
11-18-13 TIME PLOTTED => 10:33

NOTE:

FOR RSP TOTAL SEE SHEET Q-1

APC ALLOWABLE PIPE MATERIAL

TYPE	Min THICKNESS/ CLASS
PLASTIC	TYPE S
RCP	SEE STANDARD Spec

AFES ALLOWABLE MATERIAL

TYPE	Min THICKNESS/CLASS
PLASTIC	SEE STANDARD Spec
RCP	SEE STANDARD Spec

Dist	COUNTY	ROUTE	POST MILES TOTAL PROJECT	SHEET No.	TOTAL SHEETS
05	SB	101	27.0/28.1	15	30

Michael O'Neal 11-18-13
REGISTERED CIVIL ENGINEER DATE

11-18-13
PLANS APPROVAL DATE

REGISTERED PROFESSIONAL ENGINEER
MICHAEL A. O'NEAL
No. 81051
Exp. 9-30-15
CIVIL
STATE OF CALIFORNIA

THE STATE OF CALIFORNIA OR ITS OFFICERS OR AGENTS SHALL NOT BE RESPONSIBLE FOR THE ACCURACY OR COMPLETENESS OF SCANNED COPIES OF THIS PLAN SHEET.

DRAINAGE QUANTITIES

DRAINAGE PLAN SHEET No.	DRAINAGE SYSTEM No. ⬡	DRAINAGE UNIT ◯	REMOVE INLET (EA)	ADJUST INLET (EA)	18" ALTERNATIVE FLARED END SECTION (EA)	18" ALTERNATIVE PIPE CULVERT (LF)	RSP FABRIC (CLASS 8) (SQYD)	RSP (No. 1, METHOD B) (CY)	MINOR Conc (MINOR Str) (CY)	INLET DEPRESSION (EA)	HEIGHT OF INLET "H" (N) (LF)	FRAME AND GRATE (TYPE 24-9) (N) (EA)	FRAME AND GRATE (TYPE 24-12) (N) (EA)	Misc IRON & STEEL (LB)	DESCRIPTION	LOCATION	DRAINAGE UNIT ◯	DS No. ⬡	DRAINAGE PLAN SHEET No.
DP-1	1	a							3.14		4.6	2		526	TYPE G2 (MODIFIED) DI	22.71 Lt "LOL" 119+71.45 COB	a	1	DP-1
		b								1					CONCRETE APRON		b		
		c	1												REMOVE INLET		c		
DP-1	2	a							3.59		5.5	2		526	TYPE G2 (MODIFIED) DI	21.80 Lt "LOL" 122+52.42 COB	a	2	DP-1
		b								1					CONCRETE APRON		b		
		c	1												REMOVE INLET		c		
DP-1	3	a							3.59		5.5	2		526	TYPE G2 (MODIFIED) DI	22.60 Lt "LOL" 125+82.42 COB	a	3	DP-1
		b								1					CONCRETE APRON		b		
		c	1												REMOVE INLET		c		
DP-2	4	a	1												REMOVE INLET	22.93 Lt "LOL" 129+36.29 COB	a	4	DP-2
		b							3.32		5	2		526	TYPE G2 (MODIFIED) DI		b		
		c								1					CONCRETE APRON		c		
DP-2	5	a	1												REMOVE INLET	31.17 Lt "LOL" 138+82.33 COB	a	5	DP-2
		b							1.06		3.5	1		263	TYPE G1 DI		b		
		c				14									18" APC		c		
		d								1					CONCRETE APRON		d		
		e							1.39		5	1		263	TYPE G1 DI		e		
		f								1					CONCRETE APRON		f		
DP-2	6	a							0.95		3	1		263	TYPE G1 DI	33.92 Lt "LOL" 141+95.34 COB	a	6	DP-2
		b								1					CONCRETE APRON		b		
		c				9									18" APC		c		
		d		1											ADJUST INLET		d		
		e								1					CONCRETE APRON		e		
DP-3	7	a							1.31		3		1	326	TYPE G2 DI	13.75 Lt "LOL" 171+79.01 COB	a	7	DP-3
		b				10.3									18" APC		b		
		c					19.1	6.3							RSP		c		
		d			1										18" AFES		d		
DP-3	8	a							1.31		3		1	326	TYPE G2 DI	13.75 Lt "LOL" 177+32.25 COB	a	8	DP-3
		b				9.6									18" APC		b		
		c					18.9	6.1							RSP		c		
		d			1										18" AFES		d		
TOTAL			5	1	2	42.9	38.0	12.4	19.7	8				3545					

(N) NOT A SEPERATE PAY ITEM, FOR INFORMATION ONLY.

DRAINAGE QUANTITIES
DQ-1

CALCULATED-DESIGNED BY: MICHAEL O'NEAL
CHECKED BY: CHRISTOPHER MANCINI
REVISED BY
DATE REVISED
FUNCTIONAL SUPERVISOR: STEVEN WYATT
STATE OF CALIFORNIA - DEPARTMENT OF TRANSPORTATION
DESIGN

LAST REVISION DATE PLOTTED => 08-JAN-2014
11-18-13 TIME PLOTTED => 10:33

BORDER LAST REVISED 7/2/2010
USERNAME => s123239
DGN FILE => 05120001201id001.dgn
RELATIVE BORDER SCALE IS IN INCHES 0 1 2 3
UNIT 1450
PROJECT NUMBER & PHASE 05120001201

Dist	COUNTY	ROUTE	POST MILES TOTAL PROJECT	SHEET No.	TOTAL SHEETS
05	SB	101	27.0/28.1	16	30

Michael O'Neal 11-18-13
REGISTERED CIVIL ENGINEER DATE

11-18-13
PLANS APPROVAL DATE

MICHAEL A. O'NEAL No. 81051 Exp. 9-30-15 CIVIL — REGISTERED PROFESSIONAL ENGINEER — STATE OF CALIFORNIA

THE STATE OF CALIFORNIA OR ITS OFFICERS OR AGENTS SHALL NOT BE RESPONSIBLE FOR THE ACCURACY OR COMPLETENESS OF SCANNED COPIES OF THIS PLAN SHEET.

STATIONARY MOUNTED CONSTRUCTION AREA SIGNS

SIGN No.	SIGN CODE		PANEL SIZE	SIGN MESSAGE	No. OF POSTS PER SIGN AND SIZE	No. OF SIGNS
	FEDERAL	CALIFORNIA				
Ⓐ	W20-1		60" x 60"	ROAD WORK AHEAD	2 - 4" x 6"	4
Ⓑ	W20-1		48" x 48"	ROAD WORK AHEAD	2 - 4" x 4"	2
Ⓒ	G20-2	C14	24" x 48"	END ROAD WORK	2 - 4" x 4"	2

EXACT SIGN LOCATIONS TO BE DETERMINED BY THE ENGINEER

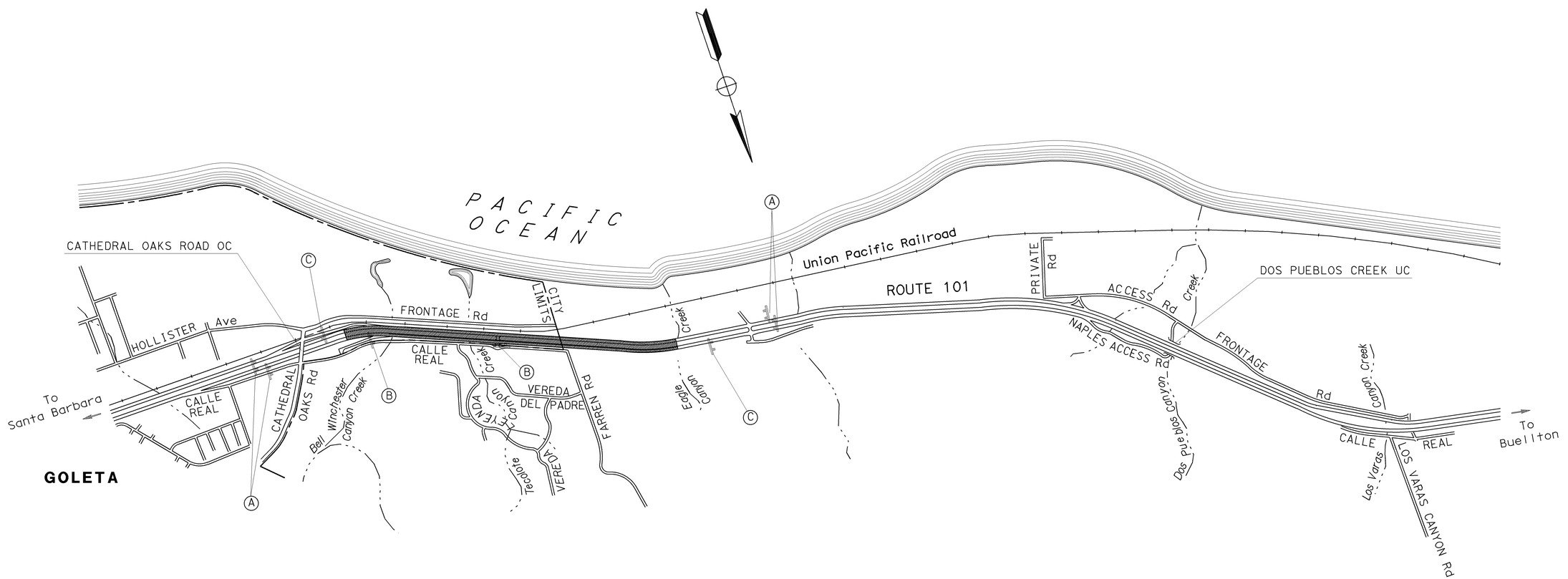

CONSTRUCTION AREA SIGNS
CS-1

APPROVED FOR CONSTRUCTION AREA SIGN WORK ONLY

NO SCALE

STATE OF CALIFORNIA - DEPARTMENT OF TRANSPORTATION
DESIGN
Caltrans
FUNCTIONAL SUPERVISOR: STEVEN WYATT
CALCULATED-DESIGNED BY: MICHAEL O'NEAL
CHECKED BY: CHRISTOPHER MANCINI
REVISED BY
DATE REVISED

LAST REVISION | DATE PLOTTED => 08-JAN-2014
11-18-13 | TIME PLOTTED => 10:33

BORDER LAST REVISED 7/2/2010
USERNAME => s123239
DGN FILE => 05120001201a001.dgn
RELATIVE BORDER SCALE IS IN INCHES 0 1 2 3
UNIT 1450
PROJECT NUMBER & PHASE 05120001201

Dist	COUNTY	ROUTE	POST MILES TOTAL PROJECT	SHEET No.	TOTAL SHEETS
05	SB	101	27.0/28.1	17	30

Michael O'Neal 11-18-13
REGISTERED CIVIL ENGINEER DATE

11-18-13
PLANS APPROVAL DATE

REGISTERED PROFESSIONAL ENGINEER
MICHAEL A. O'NEAL
No. 81051
Exp. 9-30-15
CIVIL
STATE OF CALIFORNIA

THE STATE OF CALIFORNIA OR ITS OFFICERS OR AGENTS SHALL NOT BE RESPONSIBLE FOR THE ACCURACY OR COMPLETENESS OF SCANNED COPIES OF THIS PLAN SHEET.

PAVEMENT DELINEATION QUANTITIES

LOCATION	DETAIL No.	REMOVE THERMOPLASTIC PAVEMENT MARKING	4" THERMOPLASTIC TRAFFIC STRIPE	PAVEMENT MARKER (RETROREFLECTIVE)	THERMOPLASTIC PAVEMENT MARKING		DESCRIPTION
			YELLOW	TYPE H	WHITE	YELLOW	
			LF	EA	SQFT		
"LOL" 147+00		48					LIMIT LINE
"LOL" 147+00		22					STOP
"LOL" 146+90	21		182			31	CHANNELIZATION
"LOL" 147+00					43		LIMIT LINE
"LOL" 147+00					22		STOP
"LOL" 147+00					15		TYPE IV (R) ARROW
"LOL" 147+00					22		ONLY
"LOL" 145+34 TO 148+05	25		271	8			
"LOL" 145+34 TO 148+05	25		271	8			
SUBTOTAL					102.0	31.0	
TOTAL		70.0	724.0	16.0	133.0		

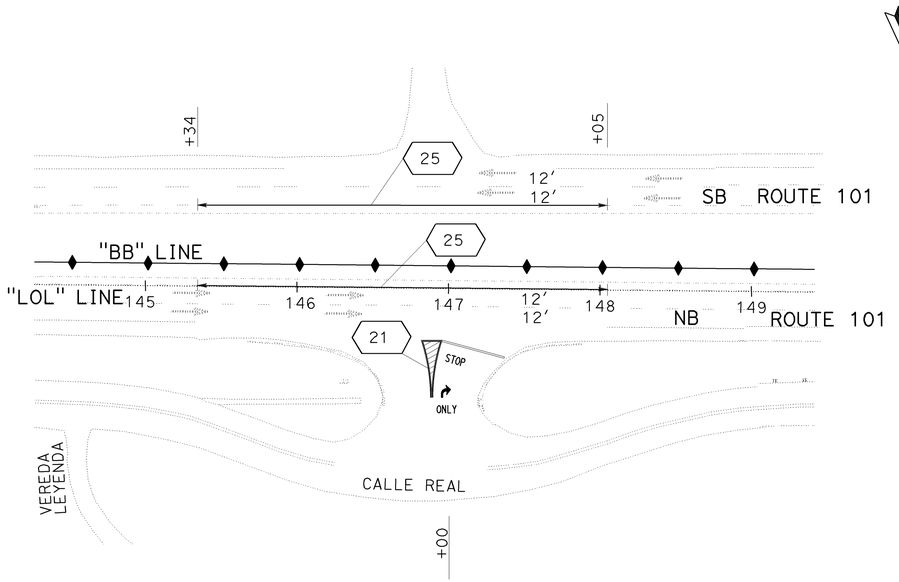

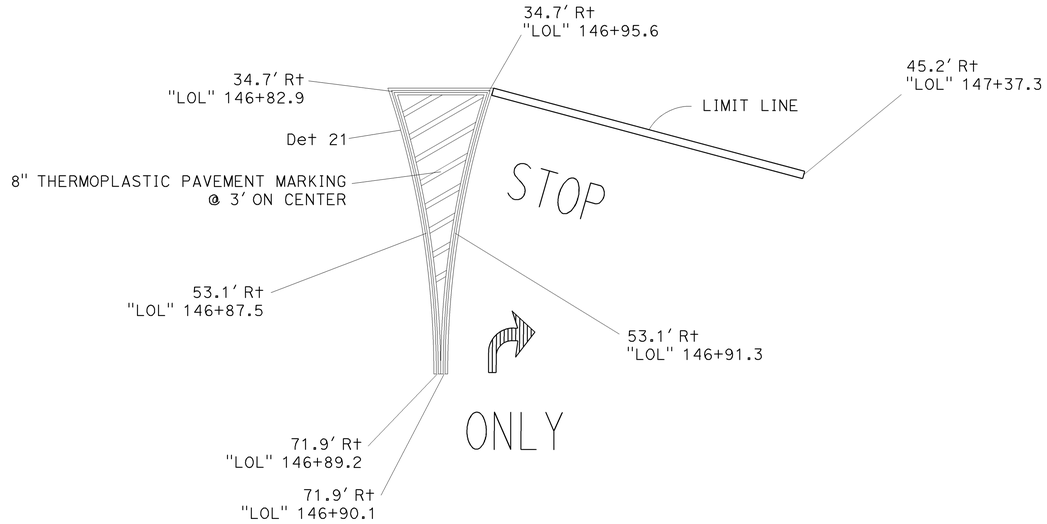

CHANNELIZATION DETAIL

PAVEMENT DELINEATION PLAN DETAILS AND QUANTITIES

NO SCALE

PDQ-1

REVISED BY | MICHAEL O'NEAL
DATE REVISED | CHRISTOPHER MANCINI
CALCULATED-DESIGNED BY
CHECKED BY
FUNCTIONAL SUPERVISOR | STEVEN WYATT
STATE OF CALIFORNIA - DEPARTMENT OF TRANSPORTATION | DESIGN

LAST REVISION | DATE PLOTTED => 08-JAN-2014
11-18-13 | TIME PLOTTED => 10:33

BORDER LAST REVISED 7/2/2010
USERNAME => s123239
DGN FILE => 0512000120na001.dgn
RELATIVE BORDER SCALE IS IN INCHES 0 1 2 3
UNIT 1450
PROJECT NUMBER & PHASE 05120001201

Dist	COUNTY	ROUTE	POST MILES TOTAL PROJECT	SHEET No.	TOTAL SHEETS
05	SB	101	27.0/28.1	18	30

Michael O'Neal 11-18-13
REGISTERED CIVIL ENGINEER DATE

11-18-13
PLANS APPROVAL DATE

REGISTERED PROFESSIONAL ENGINEER
MICHAEL A. O'NEAL
No. 81051
Exp. 9-30-15
CIVIL
STATE OF CALIFORNIA

THE STATE OF CALIFORNIA OR ITS OFFICERS OR AGENTS SHALL NOT BE RESPONSIBLE FOR THE ACCURACY OR COMPLETENESS OF SCANNED COPIES OF THIS PLAN SHEET.

NOTE:

EXACT LOCATIONS AND POSITION OF ROADSIDE SIGNS TO BE DETERMINED BY THE ENGINEER.

ROADSIDE SIGN QUANTITIES

SHEET NUMBER	SIGN NUMBER (SIGN-No.)	SIGN CODE		PANEL SIZE	REMOVE ROADSIDE SIGN (WOOD POST)	RESET ROADSIDE SIGN (TWO POST)	RELOCATE ROADSIDE SIGN	REMARKS
		CALIFORNIA	FEDERAL	INCHES	EA			
L-2	S2-1	R11, R11A		72" x 72" 21" x 72"		1		DO NOT ENTER WRONG WAY
L-2	S2-2	R11, R11A		72" x 72" 21" x 72"	1			DO NOT ENTER WRONG WAY
L-2	S2-3	G87				1		HOLLISTER Ave WINCHESTER Cyn Rd NEXT RIGHT
L-3	S3-4	R6-1		21" x 36"	1			ONE WAY
L-3	S3-5	R6-1		21" x 36"			1	ONE WAY-MOUNT ON Conc BARRIER
L-3	S3-6	R6-1		21" x 36"	1			ONE WAY
L-3	S3-7	R6-1		21" x 36"			1	ONE WAY-MOUNT ON Conc BARRIER
L-3	S3-8	R11, R11A		72" x 72" 21" x 72"	1			DO NOT ENTER WRONG WAY
L-3	S3-9	R11, R11A		72" x 72" 21" x 72"		1		DO NOT ENTER WRONG WAY
				TOTAL	4	3	2	

SIGN MOUNTED ON BARRIER DETAIL
* CAST-IN-PLACE INSERTS OR EXPANSION ANCHORS

SIGN DETAILS AND QUANTITIES SQ-1

REVISED BY | DATE REVISED
MICHAEL O'NEAL | CHRISTOPHER MANCINI
CALCULATED-DESIGNED BY | CHECKED BY
FUNCTIONAL SUPERVISOR: STEVEN WYATT
STATE OF CALIFORNIA - DEPARTMENT OF TRANSPORTATION
DESIGN

LAST REVISION: DATE PLOTTED => 08-JAN-2014
11-18-13 TIME PLOTTED => 10:33

BORDER LAST REVISED 7/2/2010 | USERNAME => s123239 | DGN FILE => 0512000120oc001.dgn | RELATIVE BORDER SCALE IS IN INCHES 0 1 2 3 | UNIT 1450 | PROJECT NUMBER & PHASE 05120001201

Dist	COUNTY	ROUTE	POST MILES TOTAL PROJECT	SHEET No.	TOTAL SHEETS
05	SB	101	27.0/28.1	19	30

Michael O'Neal 11-18-13
REGISTERED CIVIL ENGINEER DATE

11-18-13
PLANS APPROVAL DATE

MICHAEL A. O'NEAL No. 81051 Exp. 9-30-15 CIVIL — REGISTERED PROFESSIONAL ENGINEER — STATE OF CALIFORNIA

THE STATE OF CALIFORNIA OR ITS OFFICERS OR AGENTS SHALL NOT BE RESPONSIBLE FOR THE ACCURACY OR COMPLETENESS OF SCANNED COPIES OF THIS PLAN SHEET.

REMOVE

LOCATION	SALVAGE CRASH CUSHION	REMOVE CONCRETE (CHANNEL)	REMOVE CULVERT	REMOVE OVERSIDE DRAIN
	EA	CY	LF	EA
"LOL" 119+41	1			
"LOL" 142+00 TO 146+49		22		
"LOL" 147+38 TO 150+23		14		
"LOL" 146+49 TO 147+38			89	
"LOL" 151+85				1
"LOL" 162+33				1
"LOL" 171+79				1
"LOL" 177+32				1
TOTAL	1	36	89	4

TEMPORARY WATER POLLUTION CONTROL

LOCATION	Temp CHECK DAM	Temp DRAINAGE INLET PROTECTION	Temp Const ENTRANCE	Temp SOIL BINDER	Temp FIBER ROLL
		TYPE 2			
	LF	EA		SQYD	LF
"LOL" 119+41 TO 182+00	240	6	2	1000	500

EARTHWORK

LOCATION	ROADWAY EXCAVATION	(N) EMBANKMENT	OBLITERATE SURFACING
	CY		SQYD
"LOL" 119+41.28 TO 182+00	1617	1617	
"LOL" 146+78 TO 147+02			616
TOTAL	1617	1617	616

(N) NOT A SEPARATE PAY ITEM, FOR INFORMATION ONLY.

ROCK SLOPE PROTECTION

LOCATION	RSP FABRIC (CLASS 8)	RSP (NO. 1, METHOD B)
BARRIER OPENING RSP	SQYD	CY
"LOL" 151+85	24.9	8.4
"LOL" 162+33	28.2	9.6
"LOL" 182+00	25.9	8.8
FROM DRAINAGE DQ-1	38.0	12.4
TOTAL	117.0	39.2

SURVEY MONUMENT

LOCATION	EA	REMARKS
"LOL" 139+32.11	1	TYPE A
"LOL" 144+34.15	1	TYPE A
"LOL" 149+28.75	1	TYPE A
TOTAL	3	

SUMMARY OF QUANTITIES
Q-1

CALCULATED-DESIGNED BY: MICHAEL O'NEAL
CHECKED BY: CHRISTOPHER MANCINI
REVISED BY / DATE REVISED
FUNCTIONAL SUPERVISOR: STEVEN WYATT
STATE OF CALIFORNIA - DEPARTMENT OF TRANSPORTATION
DESIGN
Caltrans

LAST REVISION DATE PLOTTED => 08-JAN-2014
LAST REVISION TIME PLOTTED => 10:33
11-18-13

Dist	COUNTY	ROUTE	POST MILES TOTAL PROJECT	SHEET No.	TOTAL SHEETS
05	SB	101	27.0/28.1	20	30

Michael O'Neal 11-18-13
REGISTERED CIVIL ENGINEER DATE

11-18-13
PLANS APPROVAL DATE

MICHAEL A. O'NEAL No. 81051 Exp. 9-30-15 CIVIL — REGISTERED PROFESSIONAL ENGINEER — STATE OF CALIFORNIA

THE STATE OF CALIFORNIA OR ITS OFFICERS OR AGENTS SHALL NOT BE RESPONSIBLE FOR THE ACCURACY OR COMPLETENESS OF SCANNED COPIES OF THIS PLAN SHEET.

PAVEMENT STRUCTURE

LOCATION	CL 2 AB	TACK COAT	HMA (TYPE A)	LEAN CONCRETE BASE
	CY	TON		CY
"LOL" 119+41.28 TO 144+00				182
"LOL" 144+00 TO 182+00	1295	0.6	1311	
TOTAL	1295	0.6	1311	182

SHOULDER RUMBLE STRIP (HMA, GROUND-IN INDENTATIONS)

LOCATION	Rt/Lt	Shld	Sta
"LOL" 119+41 TO 126+00	Rt	OUTSIDE	6.59
"LOL" 133+00 TO 144+00	Rt	OUTSIDE	11
"LOL" 149+00 TO 163+50	Rt	OUTSIDE	14.5
"LOL" 119+41 TO 163+50	Rt	INSIDE	44.09
"LOL" 119+41 TO 125+50	Lt	OUTSIDE	6.09
"LOL" 132+00 TO 163+50	Lt	OUTSIDE	31.5
"LOL" 119+41 TO 163+50	Lt	INSIDE	44.09
		TOTAL	157.86

CONCRETE BARRIER

LOCATION	(TYPE 60)	WILDLIFE PASSAGEWAY (TYPE S)	WILDLIFE PASSAGEWAY (TYPE M)
	LF	EA	
"LOL" 119+41.28 TO 182+00	6259		
"LOL" 121+00		1	
"LOL" 122+00		1	
"LOL" 124+00		1	
"LOL" 127+50		1	
"LOL" 129+00		1	
"LOL" 131+00		1	
"LOL" 133+00		1	
"LOL" 134+00		1	
"LOL" 136+00		1	
"LOL" 138+25		1	
"LOL" 140+50		1	
"LOL" 142+65		1	
"LOL" 144+80		1	
"LOL" 146+95		1	
"LOL" 149+00		1	
"LOL" 151+50		1	
"LOL" 153+00		1	
"LOL" 154+00		1	
"LOL" 155+50		1	
"LOL" 157+00		1	
"LOL" 158+50		1	
"LOL" 161+00		1	
"LOL" 164+50		1	
"LOL" 166+25		1	
"LOL" 168+00		1	
"LOL" 169+90		1	
"LOL" 171+79		1	
"LOL" 173+00		1	
"LOL" 175+10		1	
"LOL" 176+00		1	
"LOL" 177+32		1	
"LOL" 179+40		1	
"LOL" 151+84.6			1
"LOL" 162+33.0			1
TOTAL	6259	32	2

SUMMARY OF QUANTITIES
Q-2

CALCULATED-DESIGNED BY: MICHAEL O'NEAL
CHECKED BY: CHRISTOPHER MANCINI
REVISED BY
DATE REVISED
FUNCTIONAL SUPERVISOR: STEVEN WYATT
STATE OF CALIFORNIA - DEPARTMENT OF TRANSPORTATION
DESIGN
Caltrans

LAST REVISION | DATE PLOTTED => 08-JAN-2014
11-18-13 | TIME PLOTTED => 10:33

BORDER LAST REVISED 7/2/2010
USERNAME => s123239
DGN FILE => 0512000120pa002.dgn
RELATIVE BORDER SCALE IS IN INCHES 0 1 2 3
UNIT 1450
PROJECT NUMBER & PHASE 05120001201

Dist	COUNTY	ROUTE	POST MILES TOTAL PROJECT	SHEET No.	TOTAL SHEETS
05	SB	101	27.0/28.1	21	30

LICENSED LANDSCAPE ARCHITECT

11-18-13
PLANS APPROVAL DATE

THE STATE OF CALIFORNIA OR ITS OFFICERS OR AGENTS SHALL NOT BE RESPONSIBLE FOR THE ACCURACY OR COMPLETENESS OF SCANNED COPIES OF THIS PLAN SHEET.

LICENSED LANDSCAPE ARCHITECT — David A. Emerson — Signature — 10-31-15 Renewal Date — 11-15-13 Date — STATE OF CALIFORNIA

NOTE:

FOR ACCURATE RIGHT OF WAY DATA, CONTACT
RIGHT OF WAY ENGINEERING AT THE DISTRICT OFFICE.

LEGEND:

EROSION CONTROL TYPE 1

COMPOST SOCK

COMPOST SOCK 200 LF (4 LOCATIONS, 50 LF EA)

EC TYPE 1 38,200 SQFT

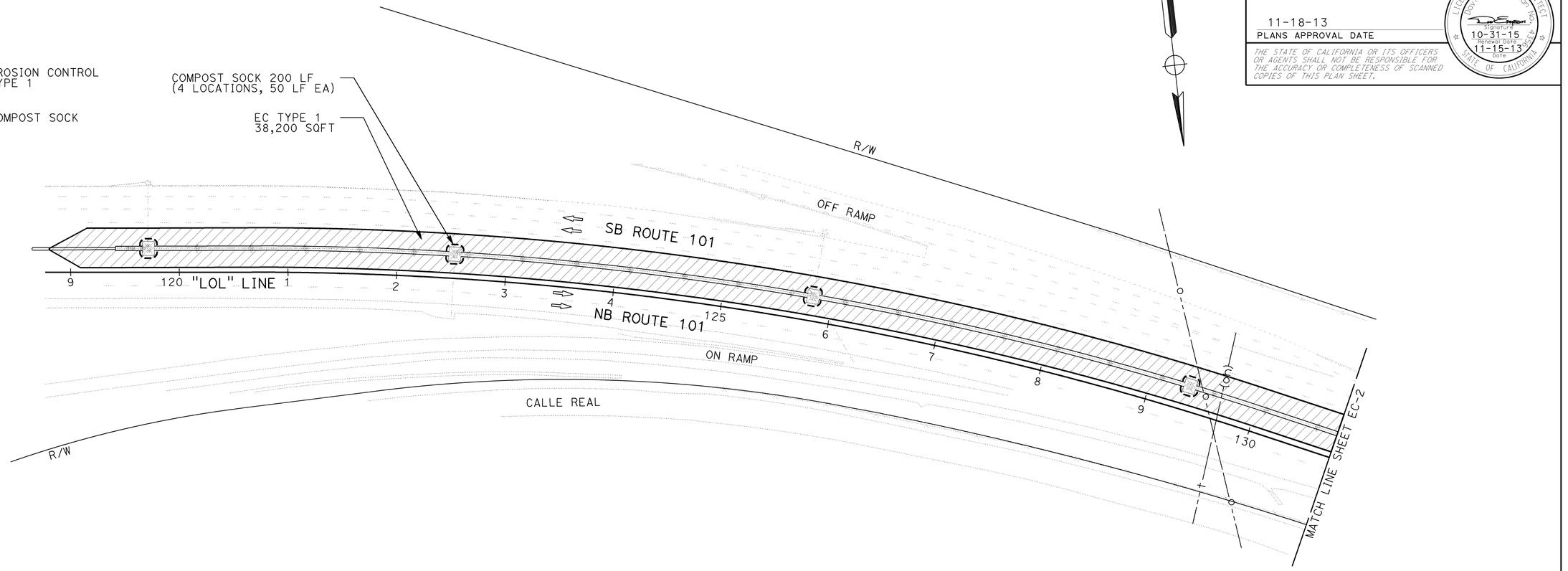

EROSION CONTROL TYPE 1

SEQUENCE	ITEM	MATERIAL		APPLICATION RATE
		DESCRIPTION	TYPE	
STEP 1	COMPOST	COMPOST	MEDIUM	70 CY/ACRE
STEP 2	HYDROSEED	SEED	MIX	40 LB/ACRE
		FIBER	WOOD	1000 LB/ACRE
		TACKIFIER	PSYLLIUM	150 LB/ACRE

COMPOST SOCK

SEQUENCE	ITEM	MATERIAL		REMARKS
		DESCRIPTION	TYPE	
INSTALLED PRIOR TO EROSION CONTROL	COMPOST SOCK	COMPOST	MEDIUM	TYPE 2 INSTALLATION

SEED MIX

SEED	BOTANICAL NAME (COMMON NAME)	PERCENT GERMINATION (MINIMUM)	POUNDS PURE LIVE SEED PER ACRE (SLOPE MEASUREMENT)
MIX	ACHILLEA MILLEFOLIUM (YARROW)	70	1.0
	ELYMUS ELYMOIDES (SQUIRRELTAIL)	50	22.0
	ESCHSCHOLZIA CALIFORNICA (CALIFORNIA POPPY)	70	3.4
	LASTHENIA CALIFORNICA (DWARF GOLDFIELDS)	40	1.0
	LAYIA PLATYGLOSS (TIDY TIPS)	60	4.7
	LOTUS PURSHIANUS (PURSHING)	60	1.1
	MELICA IMPERFECTA (COAST RANGE MELIC)	50	4.0
	VULPIA MICROSTACHYS (SMALL FESCUE)	70	2.8

APPROVED FOR EROSION CONTROL WORK ONLY

SCALE 1" = 50'

EROSION CONTROL PLAN AND LEGEND EC-1

STATE OF CALIFORNIA - DEPARTMENT OF TRANSPORTATION
LANDSCAPE ARCHITECTURE

SENIOR LANDSCAPE ARCHITECT: DENNIS REEVES

CALCULATED-DESIGNED BY: JO JACKSON
CHECKED BY: DAVID EMERSON

REVISED BY | DATE REVISED

LAST REVISION | DATE PLOTTED => 08-JAN-2014
11-18-13 | TIME PLOTTED => 10:33

BORDER LAST REVISED 7/2/2010

USERNAME => s123239
DGN FILE => 0512000120te001.dgn

RELATIVE BORDER SCALE IS IN INCHES 0 1 2 3

UNIT 1502

PROJECT NUMBER & PHASE 05120001201

Dist	COUNTY	ROUTE	POST MILES TOTAL PROJECT	SHEET No.	TOTAL SHEETS
05	SB	101	27.0/28.1	22	30

LICENSED LANDSCAPE ARCHITECT

11-18-13

PLANS APPROVAL DATE

LICENSED LANDSCAPE ARCHITECT David A. Emerson No. 4356 Signature 10-31-15 Renewal Date 11-15-13 Date STATE OF CALIFORNIA

THE STATE OF CALIFORNIA OR ITS OFFICERS OR AGENTS SHALL NOT BE RESPONSIBLE FOR THE ACCURACY OR COMPLETENESS OF SCANNED COPIES OF THIS PLAN SHEET.

NOTE:

FOR ACCURATE RIGHT OF WAY DATA, CONTACT RIGHT OF WAY ENGINEERING AT THE DISTRICT OFFICE.

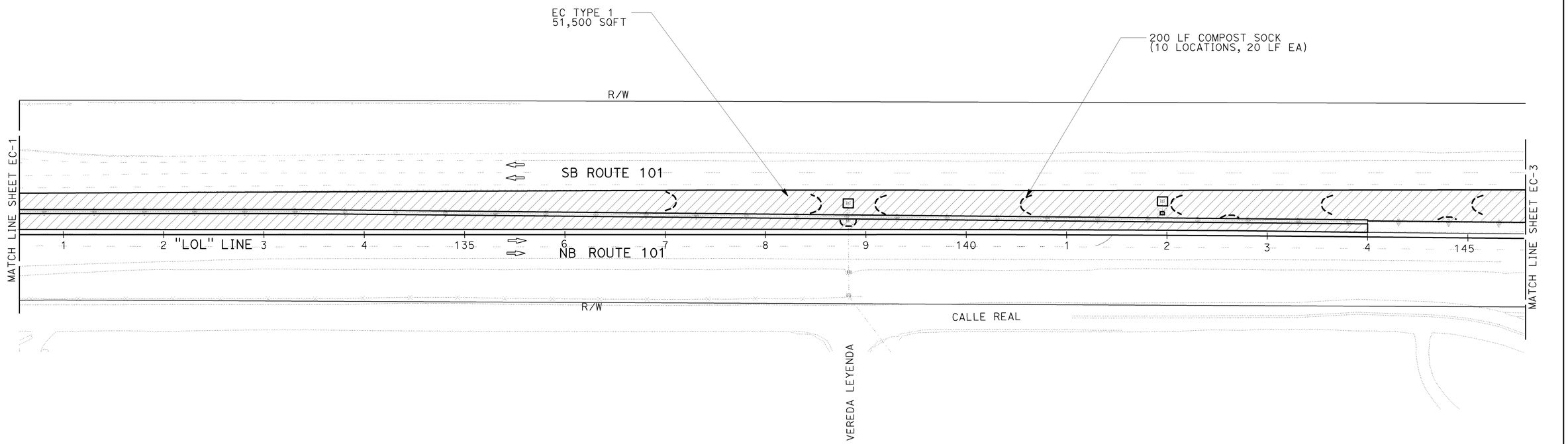

EROSION CONTROL PLAN
EC-2

SCALE 1" = 50'

APPROVED FOR EROSION CONTROL WORK ONLY

STATE OF CALIFORNIA - DEPARTMENT OF TRANSPORTATION

Caltrans® LANDSCAPE ARCHITECTURE

SENIOR LANDSCAPE ARCHITECT: DENNIS REEVES

CALCULATED-DESIGNED BY: DAVID EMERSON

CHECKED BY: JO JACKSON

REVISED BY

DATE REVISED

LAST REVISION 11-18-13

DATE PLOTTED => 08-JAN-2014

TIME PLOTTED => 10:33

Dist	COUNTY	ROUTE	POST MILES TOTAL PROJECT	SHEET No.	TOTAL SHEETS
05	SB	101	27.0/28.1	23	30

LICENSED LANDSCAPE ARCHITECT

11-18-13
PLANS APPROVAL DATE

THE STATE OF CALIFORNIA OR ITS OFFICERS OR AGENTS SHALL NOT BE RESPONSIBLE FOR THE ACCURACY OR COMPLETENESS OF SCANNED COPIES OF THIS PLAN SHEET.

LICENSED LANDSCAPE ARCHITECT
David A. Emerson
Signature
10-31-15
Renewal Date
11-15-13
Date
STATE OF CALIFORNIA

NOTE:

FOR ACCURATE RIGHT OF WAY DATA, CONTACT
RIGHT OF WAY ENGINEERING AT THE DISTRICT OFFICE.

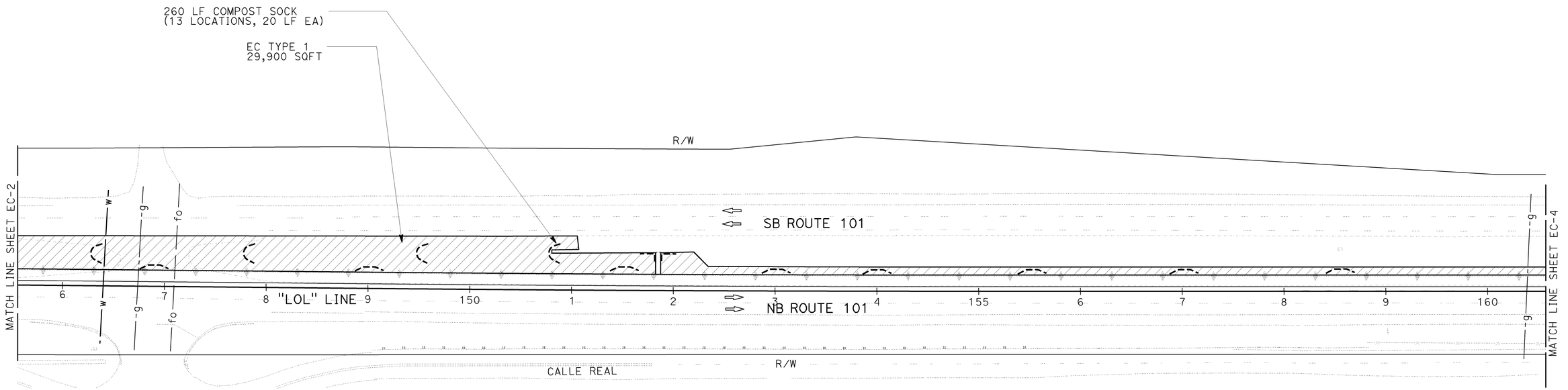

APPROVED FOR EROSION CONTROL WORK ONLY

EROSION CONTROL PLAN
SCALE 1" = 50'

EC-3

REVISED BY | DATE REVISED
DAVID EMERSON | JO JACKSON
CALCULATED-DESIGNED BY | CHECKED BY
SENIOR LANDSCAPE ARCHITECT | DENNIS REEVES
STATE OF CALIFORNIA - DEPARTMENT OF TRANSPORTATION
Caltrans® LANDSCAPE ARCHITECTURE

LAST REVISION 11-18-13
DATE PLOTTED => 08-JAN-2014
TIME PLOTTED => 10:33

BORDER LAST REVISED 7/2/2010
USERNAME => s123239
DGN FILE => 0512000120te003.dgn
RELATIVE BORDER SCALE IS IN INCHES 0 1 2 3
UNIT 1502
PROJECT NUMBER & PHASE 05120001201

Dist	COUNTY	ROUTE	POST MILES TOTAL PROJECT	SHEET No.	TOTAL SHEETS
05	SB	101	27.0/28.1	24	30

LICENSED LANDSCAPE ARCHITECT

11-18-13
PLANS APPROVAL DATE

THE STATE OF CALIFORNIA OR ITS OFFICERS OR AGENTS SHALL NOT BE RESPONSIBLE FOR THE ACCURACY OR COMPLETENESS OF SCANNED COPIES OF THIS PLAN SHEET.

LICENSED LANDSCAPE ARCHITECT
DOUG A. EMERSON
10-31-15
Renewal Date
11-15-13
Date
STATE OF CALIFORNIA

180 LF COMPOST SOCK
(9 LOCATIONS, 20 LF EA)

EC TYPE 1
15,600 SQFT

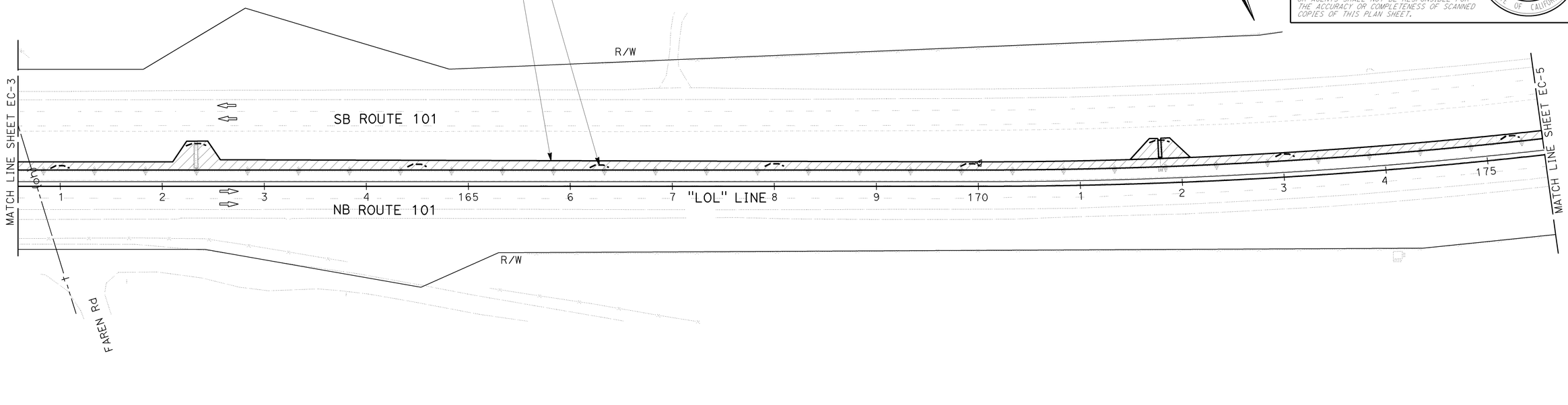

APPROVED FOR EROSION CONTROL WORK ONLY

EROSION CONTROL PLAN
EC-4

SCALE 1" = 50'

DAVID EMERSON
JO JACKSON
DENNIS REEVES

STATE OF CALIFORNIA - DEPARTMENT OF TRANSPORTATION
LANDSCAPE ARCHITECTURE

REVISED BY | DATE REVISED
CALCULATED-DESIGNED BY
CHECKED BY
SENIOR LANDSCAPE ARCHITECT

LAST REVISION 11-18-13
DATE PLOTTED => 08-JAN-2014
TIME PLOTTED => 10:33

BORDER LAST REVISED 7/2/2010
USERNAME => s123239
DGN FILE => 0512000120te004.dgn
RELATIVE BORDER SCALE IS IN INCHES 0 1 2 3
UNIT 1502
PROJECT NUMBER & PHASE 05120001201

Dist	COUNTY	ROUTE	POST MILES TOTAL PROJECT	SHEET No.	TOTAL SHEETS
05	SB	101	27.0/28.1	25	30

LICENSED LANDSCAPE ARCHITECT

11-18-13
PLANS APPROVAL DATE

THE STATE OF CALIFORNIA OR ITS OFFICERS OR AGENTS SHALL NOT BE RESPONSIBLE FOR THE ACCURACY OR COMPLETENESS OF SCANNED COPIES OF THIS PLAN SHEET.

LICENSED LANDSCAPE ARCHITECT
David A. Emerson No.
Signature
10-31-15
Renewal Date
11-15-13
Date
STATE OF CALIFORNIA

NOTE:

FOR ACCURATE RIGHT OF WAY DATA, CONTACT
RIGHT OF WAY ENGINEERING AT THE DISTRICT OFFICE.

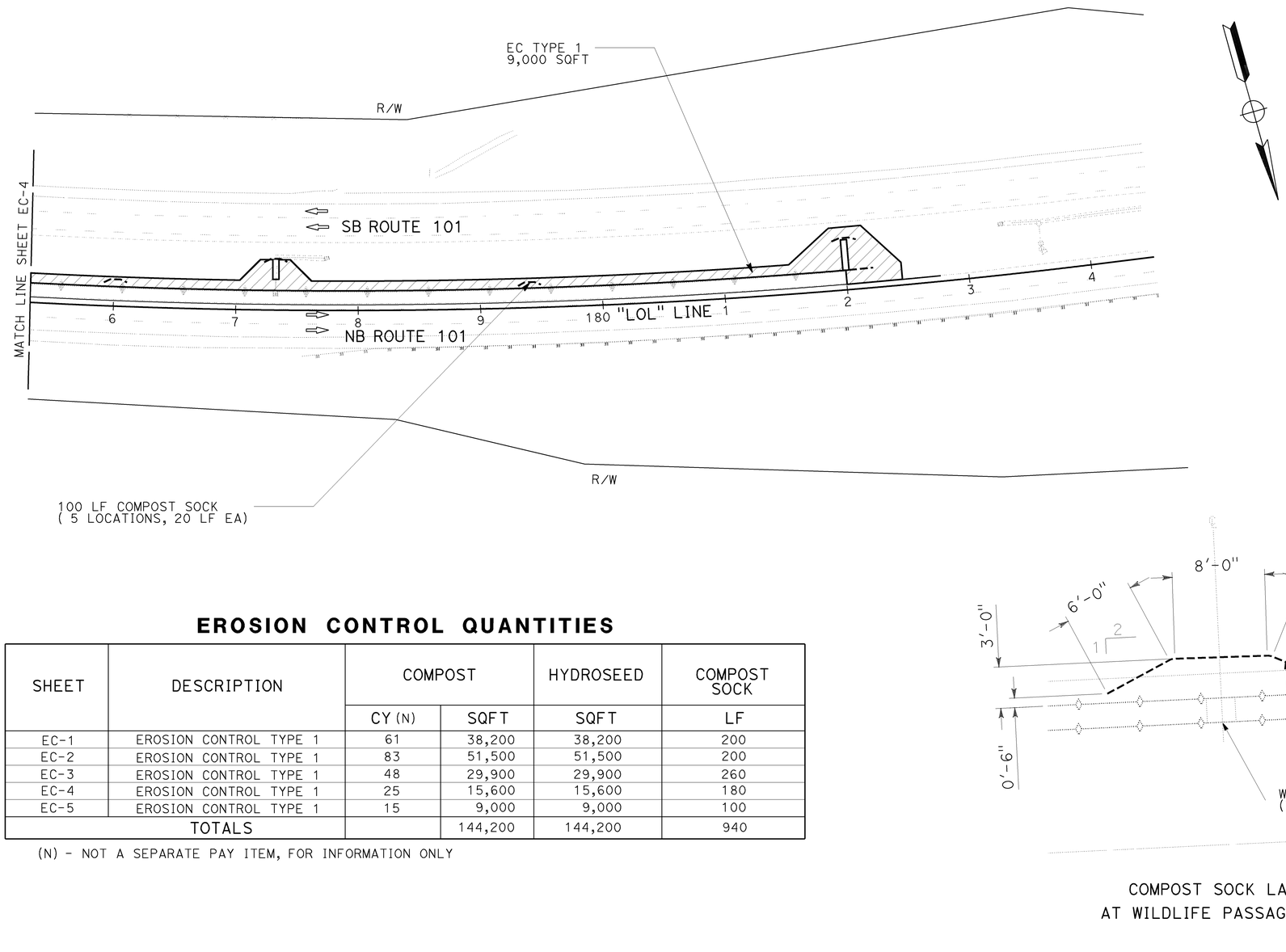

EROSION CONTROL QUANTITIES

SHEET	DESCRIPTION	COMPOST		HYDROSEED	COMPOST SOCK
		CY (N)	SQFT	SQFT	LF
EC-1	EROSION CONTROL TYPE 1	61	38,200	38,200	200
EC-2	EROSION CONTROL TYPE 1	83	51,500	51,500	200
EC-3	EROSION CONTROL TYPE 1	48	29,900	29,900	260
EC-4	EROSION CONTROL TYPE 1	25	15,600	15,600	180
EC-5	EROSION CONTROL TYPE 1	15	9,000	9,000	100
TOTALS			144,200	144,200	940

(N) - NOT A SEPARATE PAY ITEM, FOR INFORMATION ONLY

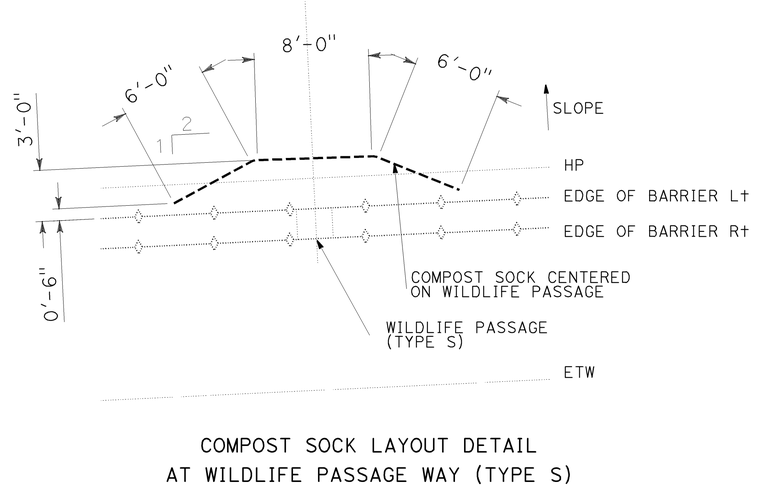

COMPOST SOCK LAYOUT DETAIL
AT WILDLIFE PASSAGE WAY (TYPE S)

APPROVED FOR EROSION CONTROL WORK ONLY

EROSION CONTROL PLAN AND QUANTITIES EC-5

SCALE 1" = 50'

STATE OF CALIFORNIA - DEPARTMENT OF TRANSPORTATION
LANDSCAPE ARCHITECTURE
SENIOR LANDSCAPE ARCHITECT: DENNIS REEVES
CALCULATED-DESIGNED BY: DAVID EMERSON
CHECKED BY: JO JACKSON
REVISED BY
DATE REVISED

LAST REVISION 11-18-13
DATE PLOTTED => 08-JAN-2014
TIME PLOTTED => 10:33

BORDER LAST REVISED 7/2/2010
USERNAME => s123239
DGN FILE => 0512000120te005.dgn
RELATIVE BORDER SCALE IS IN INCHES 0 1 2 3
UNIT 1502
PROJECT NUMBER & PHASE 05120001201

M

Maint	MAINTENANCE
Max	MAXIMUM
MB	METAL BEAM
MBB	METAL BEAM BARRIER
MBGR	METAL BEAM GUARD RAILING
Med	MEDIAN
MGS	MIDWEST GUARDRAIL SYSTEM
MH	MANHOLE
Min	MINIMUM
Misc	MISCELLANEOUS
Misc I & S	MISCELLANEOUS IRON AND STEEL
Mkr	MARKER
Mod	MODIFIED, MODIFY
Mon	MONUMENT
MP	METAL PLATE
MPGR	METAL PLATE GUARD RAILING
MR	MOVEMENT RATING
MSE	MECHANICALLY STABILIZED EMBANKMENT
Mt	MOUNTAIN, MOUNT
Mtl	MATERIAL
MVP	MAINTENANCE VEHICLE PULLOUT

N

N	NORTH
NB	NORTHBOUND
No.	NUMBER (MUST HAVE PERIOD)
Nos.	NUMBERS (MUST HAVE PERIOD)
NPS	NOMINAL PIPE SIZE
NS	NEAR SIDE
NSP	NEW STANDARD PLAN
NTS	NOT TO SCALE

O

Oblr	OBLITERATE
OC	OVERCROSSING
OD	OUTSIDE DIAMETER
OF	OUTSIDE FACE
OG	ORIGINAL GROUND
OGAC	OPEN GRADED ASPHALT CONCRETE
OGFC	OPEN GRADED FRICTION COURSE
OH	OVERHEAD
OHWM	ORDINARY HIGH WATER MARK
O-O	OUT TO OUT
Opp	OPPOSITE
OSD	OVERSIDE DRAIN

P

P	PAGE
PAP	PERFORATED ALUMINUM PIPE
PB	PULL BOX
PC	POINT OF CURVATURE, PRECAST
PCC	POINT OF COMPOUND CURVE, PORTLAND CEMENT CONCRETE
PCMS	PORTABLE CHANGEABLE MESSAGE SIGN
PCP	PERFORATED CONCRETE PIPE, PRESTRESSED CONCRETE PIPE
PCVC	POINT OF COMPOUND VERTICAL CURVE
PEC	PERMIT TO ENTER AND CONSTRUCT
Ped	PEDESTRIAN
Ped OC	PEDESTRIAN OVERCROSSING
Ped UC	PEDESTRIAN UNDERCROSSING
Perm Mtl	PERMEABLE MATERIAL

P continued

PG	PROFILE GRADE
PI	POINT OF INTERSECTION
PJP	PARTIAL JOINT PENETRATION
Pkwy	PARKWAY
℄,PL	PLATE
P/L	PROPERTY LINE
PM	POST MILE, TIME FROM NOON TO MIDNIGHT
PN	PAVING NOTCH
POC	POINT OF HORIZONTAL CURVE
POT	POINT OF TANGENT
POVC	POINT OF VERTICAL CURVE
PP	PIPE PILE, PLASTIC PIPE, POWER POLE
PPL	PREFORMED PERMEABLE LINER
PPP	PERFORATED PLASTIC PIPE
PRC	POINT OF REVERSE CURVE
PRF	PAVEMENT REINFORCING FABRIC
PRVC	POINT OF REVERSE VERTICAL CURVE
PS&E	PLANS, SPECIFICATIONS AND ESTIMATES
PS, P/S	PRESTRESSED
PSP	PERFORATED STEEL PIPE
PT	POINT OF TANGENCY
PVC	POLYVINYL CHLORIDE
Pvmt	PAVEMENT

Q

Qty	QUANTITY

R

R	RADIUS
R & D	REMOVE AND DISPOSE
R & S	REMOVE AND SALVAGE
R/C	RATE OF CHANGE
RCA	REINFORCED CONCRETE ARCH
RCB	REINFORCED CONCRETE BOX
RCP	REINFORCED CONCRETE PIPE
RCPA	REINFORCED CONCRETE PIPE ARCH
Rd	ROAD
Reinf	REINFORCED, REINFORCEMENT, REINFORCING
Rel	RELOCATE
Repl	REPLACEMENT
Ret	RETAINING
Rev	REVISED, REVISION
Rdwy	ROADWAY
RHMA	RUBBERIZED HOT MIX ASPHALT
Riv	RIVER
RM	ROAD-MIXED
RP	RADIUS POINT, REFERENCE POINT
RR	RAILROAD
RSP	ROCK SLOPE PROTECTION, REVISED STANDARD PLAN
Rt	RIGHT
Rte	ROUTE
RW	REDWOOD, RETAINING WALL
R/W	RIGHT OF WAY
Rwy	RAILWAY

S

S	SOUTH, SUPPLEMENT
SAE	STRUCTURE APPROACH EMBANKMENT
Salv	SALVAGE
SAPP	STRUCTURAL ALUMINUM PLATE PIPE
SB	SOUTHBOUND
SC	SAND CUSHION
SCSP	SLOTTED CORRUGATED STEEL PIPE
SD	STORM DRAIN
Sec	SECOND, SECTION
Sep	SEPARATION
SG	SUBGRADE
Shld	SHOULDER
Sht	SHEET
Sim	SIMILAR
℄	STATION LINE
SM	SELECTED MATERIAL
Spec	SPECIAL, SPECIFICATIONS
SPP	SLOTTED PLASTIC PIPE
SS	SLOPE STAKE
SSBM	STRAP AND SADDLE BRACKET METHOD
SSD	STRUCTURAL SECTION DRAIN
SSPA	STRUCTURAL STEEL PLATE ARCH
SSPP	STRUCTURAL STEEL PLATE PIPE
SSPPA	STRUCTURAL STEEL PLATE PIPE ARCH
SSRP	STEEL SPIRAL RIB PIPE
St	STREET
Sta	STATION
STBB	SINGLE THRIE BEAM BARRIER
Std	STANDARD
Str	STRUCTURE
Surf	SURFACING
SW	SIDEWALK, SOUND WALL
Swr	SEWER
Sym	SYMMETRICAL
S4S	SURFACE 4 SIDES

T

T	SEMI-TANGENT
Tan	TANGENT
TBB	THRIE BEAM BARRIER
Tbr	TIMBER
TC	TOP OF CURB
TCB	TRAFFIC CONTROL BOX
TCE	TEMPORARY CONSTRUCTION EASEMENT
Tel	TELEPHONE
Temp	TEMPORARY
TG	TOP OF GRADE
Tot	TOTAL
TP	TELEPHONE POLE
TPB	TREATED PERMEABLE BASE
TPM	TREATED PERMEABLE MATERIAL
Trans	TRANSITION

T continued

TS	TRANSVERSE, TRAFFIC SIGNAL, TUBULAR STEEL
Typ	TYPICAL

U

UC	UNDERCROSSING
UD	UNDERDRAIN
UG	UNDERGROUND
UON	UNLESS OTHERWISE NOTED
UP	UNDERPASS

V

V	VALVE, DESIGN SPEED
Var	VARIABLE, VARIES
VC	VERTICAL CURVE
VCP	VITRIFIED CLAY PIPE
Vert	VERTICAL
Via	VIADUCT
Vol	VOLUME

W

W	WEST, WIDTH
WB	WESTBOUND
WH	WEEP HOLE
WM	WIRE MESH
WS	WATER SURFACE
WSP	WELDED STEEL PIPE
Wt	WEIGHT
WV	WATER VALVE
WW	WINGWALL
WWLOL	WINGWALL LAYOUT LINE

X

X Sec	CROSS SECTION
Xing	CROSSING

Y

Yr	YEAR
Yrs	YEARS

Dist	COUNTY	ROUTE	POST MILES TOTAL PROJECT	SHEET No.	TOTAL SHEETS
05	SB	101	27.0/28.1	26	30

Grace M. Tsushima
REGISTERED CIVIL ENGINEER

July 19, 2013
PLANS APPROVAL DATE

REGISTERED PROFESSIONAL ENGINEER — Grace M. Tsushima — No. C49814 — Exp. 9-30-14 — CIVIL — STATE OF CALIFORNIA

THE STATE OF CALIFORNIA OR ITS OFFICERS OR AGENTS SHALL NOT BE RESPONSIBLE FOR THE ACCURACY OR COMPLETENESS OF SCANNED COPIES OF THIS PLAN SHEET.

TO ACCOMPANY PLANS DATED 11-18-13

UNIT OF MEASUREMENT SYMBOLS:

Some of the symbols used in the project plan quantity tables and in the Bid Item List are:

TABLE A

SYMBOL USED	DEFINITIONS
ACRE	ACRE
CF	CUBIC FOOT
CY	CUBIC YARD
EA	EACH
GAL	GALLON
LB	POUND
LF	LINEAR FOOT
SQFT	SQUARE FOOT
SQYD	SQUARE YARD
STA	100 FEET
TAB	TABLET
TON	2,000 POUNDS

Some of the symbols used in the plans other than in the project plan quantity tables are:

TABLE B

SYMBOL USED	DEFINITIONS
ksi	KIPS PER SQUARE INCH
ksf	KIPS PER SQUARE FOOT
psi	POUNDS PER SQUARE INCH
psf	POUNDS PER SQUARE FOOT
lb/ft^3, pcf	POUNDS PER CUBIC FOOT
tsf	TONS PER SQUARE FOOT
mph, MPH *	MILES PER HOUR
ø	NOMINAL DIAMETER
oz	OUNCE
lb	POUND
kip	1,000 POUNDS
cal	CALORIE
ft	FOOT OR FEET
gal	GALLON

* For use on a sign panel only

STATE OF CALIFORNIA
DEPARTMENT OF TRANSPORTATION

ABBREVIATIONS (SHEET 2 OF 2)

NO SCALE

RSP A10B DATED JULY 19, 2013 SUPERSEDES STANDARD PLAN A10B DATED MAY 20, 2011 - PAGE 2 OF THE STANDARD PLANS BOOK DATED 2010.

REVISED STANDARD PLAN RSP A10B

2010 REVISED STANDARD PLAN RSP A10B

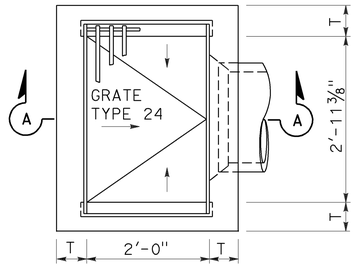

TYPE G1

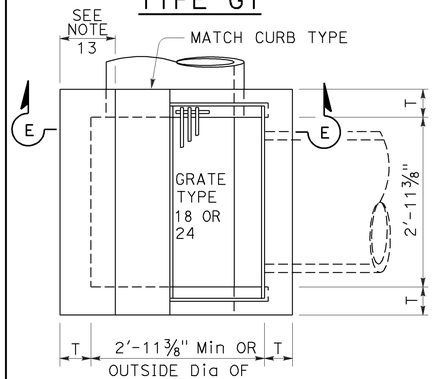

TYPE G4

SECTION A-A

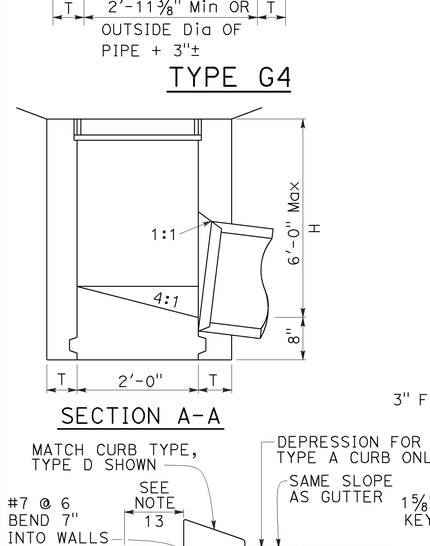

SECTION E-E

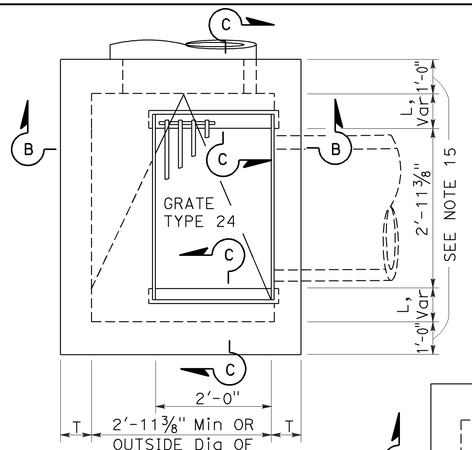

TYPE G2

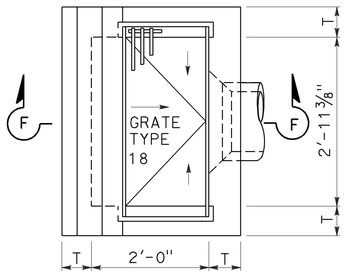

TYPE G5

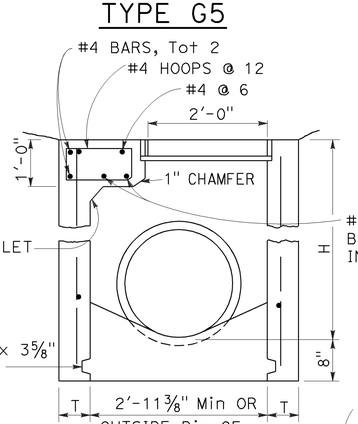

SECTION B-B

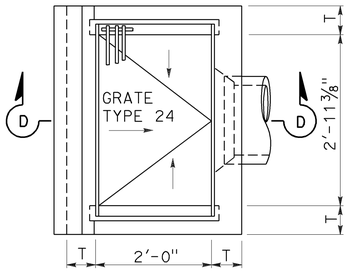

TYPE G3

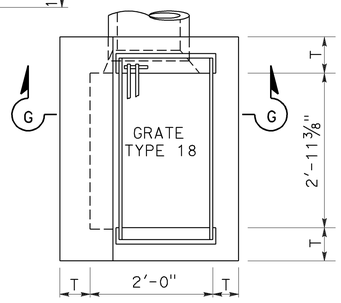

TYPE G6

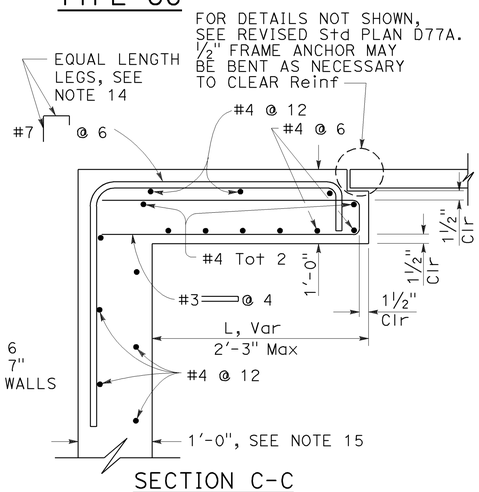

SECTION C-C

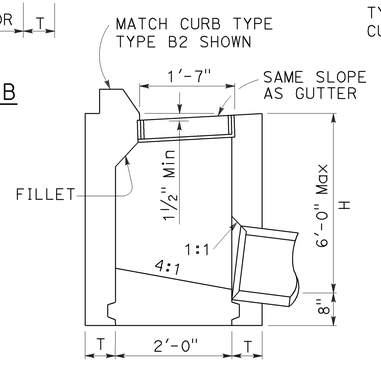

SECTION F-F

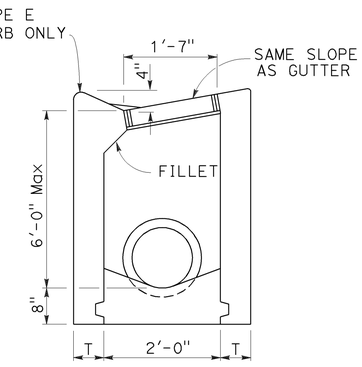

SECTION G-G

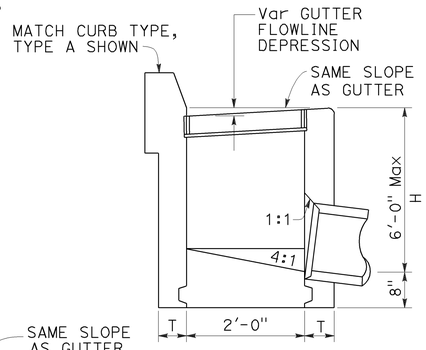

SECTION D-D

TO ACCOMPANY PLANS DATED 11-18-13

Dist	COUNTY	ROUTE	POST MILES TOTAL PROJECT	SHEET No.	TOTAL SHEETS
05	SB	101	27.0/28.1	27	30

Glenn DeCou
REGISTERED CIVIL ENGINEER

October 19, 2012
PLANS APPROVAL DATE

REGISTERED PROFESSIONAL ENGINEER
Glenn DeCou
No. C34547
Exp. 9-30-13
CIVIL
STATE OF CALIFORNIA

THE STATE OF CALIFORNIA OR ITS OFFICERS OR AGENTS SHALL NOT BE RESPONSIBLE FOR THE ACCURACY OR COMPLETENESS OF SCANNED COPIES OF THIS PLAN SHEET.

NOTES:

1. "H" is the difference in elevation between the outlet pipe flow line and the normal gutter grade line undepressed.
2. For "T" wall thickness, see Table A below.
3. Wall reinforcing not required when "H" is 8'-0" or less and the unsupported width or length is 7'-0" or less. Walls exceeding these limits shall be reinforced with #4 bars @ 1'-6" ± centers placed 1½" clear to inside of box unless otherwise shown.
4. Inlet bottom reinforcing not required. See Standard Plan D74C for alternative reinforced bottom and alternative half round bottom.
5. Steps-None required where "H" is less than 2'-6". Where "H" is 2'-6" or more, install steps with lowest rung 1'-0" above the floor and highest rung not more than 6" below top of inlet. The distance between steps shall not exceed 1'-0" and shall be uniform throughout the length of the wall. Place steps in the wall without an opening. Steps inserts may be substituted for the bar steps. Step inserts shall comply with State Industrial Safety requirements. See Standard Plan D74C for step details.
6. Details shown apply to both metal and concrete pipe.
7. Pipe(s) can be placed in any wall.
8. Curb section shall match adjacent curb.
9. Basin floors shall have wood trowel finish and a minimum slope of 12:3 from all directions toward outlet pipe.
10. Set inlet so that grate bars are parallel to direction of principal surface flow.
11. See Revised Standard Plans D77A and D77B for grate and frame details and weights of miscellaneous iron and steel.
12. See Standard Plan D78A for gutter depression details.
13. This dimenison will vary with different grates, curbs types, box width and wall thickness.
14. Bar may be rotated as necessary to clear opening. Where "L" is 6" or less, bar may be omitted.
15. Where "L" is 6" or less, wall thickness shall be as shown in Table A.
16. Cast-in-place inlets to be formed around all pipes/stubs intersecting the inlet, and concrete poured in one continuous operation. Precast inlets shall have mortared connections conforming to details for Type GCP Inlet shown on Standard Plan D75B. See Standard Specifications for mortar composition.

TABLE A

CONCRETE QUANTITIES				
TYPE	H=3'-0" TO 8'-0" (T=6")		H=8'-1" TO 20'-0" (T=8")	
	H=3'-0" (CY)	ADDITIONAL PCC PER FOOT (CY)	H=8'-1" (CY)	ADDITIONAL PCC PER FOOT (CY)
G-1	0.95	0.220	See Note A	SEE NOTE A
G-2*	1.31	0.255	3.50	0.357
G-3	1.03	0.220	See Note A	SEE NOTE A
G-4* (TYPE 24)	1.27	0.255	3.48	0.357
G-4* (TYPE 18)	1.30	0.255	3.50	0.357
G-5	1.02	0.220	SEE NOTE A	SEE NOTE A
G-6	1.04	0.220	SEE NOTE A	SEE NOTE A

TABLE BASED ON 8" FLOOR SLAB. NO DEDUCTIONS ARE TO BE MADE TO THESE QUANTITIES BECAUSE OF PIPE OPENINGS, DIFFERENT FLOOR ALTERNATIVES OR DIFFERENT CURB TYPES. * QUANTITIES FOR TYPE G-2 AND G-4 INLETS BASED ON THE MINIMUM INTERIOR DIMENSIONS.

NOTE A:

Maximum allowable height 6'-0".

STATE OF CALIFORNIA
DEPARTMENT OF TRANSPORTATION

DRAINAGE INLETS

NO SCALE

RSP D73 DATED OCTOBER 19, 2012 SUPERSEDES STANDARD PLAN D73 DATED MAY 20, 2011 - PAGE 156 OF THE STANDARD PLANS BOOK DATED 2010.

REVISED STANDARD PLAN RSP D73

2010 REVISED STANDARD PLAN RSP D73

Dist	COUNTY	ROUTE	POST MILES TOTAL PROJECT	SHEET No.	TOTAL SHEETS
05	SB	101	27.0/28.1	28	30

Raymond Don Tsztoo
REGISTERED CIVIL ENGINEER

April 19, 2013
PLANS APPROVAL DATE

REGISTERED PROFESSIONAL ENGINEER — Raymond Don Tsztoo — No. C37332 — Exp. 6-30-14 — CIVIL — STATE OF CALIFORNIA

THE STATE OF CALIFORNIA OR ITS OFFICERS OR AGENTS SHALL NOT BE RESPONSIBLE FOR THE ACCURACY OR COMPLETENESS OF SCANNED COPIES OF THIS PLAN SHEET.

TO ACCOMPANY PLANS DATED 11-18-13

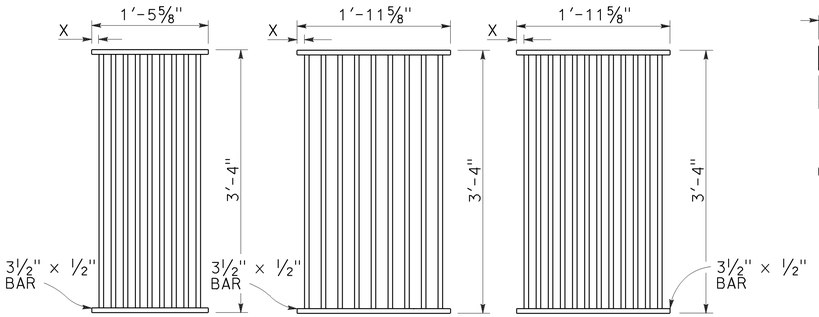

TYPE 18-9

1⅜" Clear spacing. Use within the roadbed on highways where bicycles and pedestrians are excluded.

TYPE 24-9

2" Clear spacing. Use in locations off the roadbed on all types of highways.

TYPE 24-12

1⅜" Clear spacing. Use within the roadbed on highways where bicycles and pedestrians are excluded.

RECTANGULAR GRATE DETAILS

(See table below)

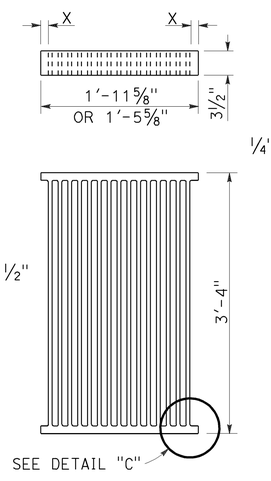

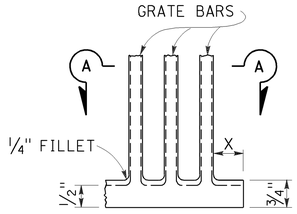

DETAIL "C"

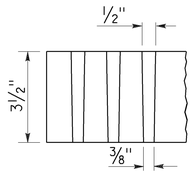

SECTION A-A

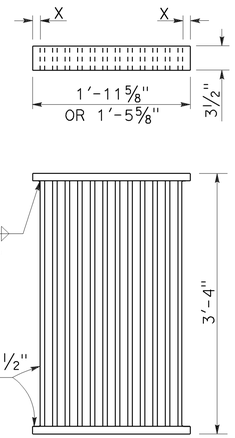

ALTERNATIVE CAST DUCTILE IRON GRATE OR CAST CARBON STEEL GRATE

ALTERNATIVE WELDED GRATE

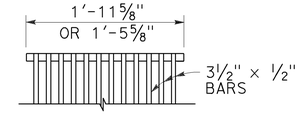

CAST END BLOCK

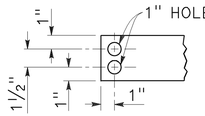

END OF BAR

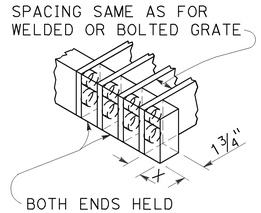

ALTERNATIVE CAST DUCTILE IRON OR CAST CARBON STEEL END BLOCK GRATE

NOTES:

1. Grate type numbers refer to approximate width of grate in inches and number of bars, respectively.
2. Contractor has the option of using cast ductile iron, cast carbon steel, welded, bolted, or cast end block grate.
3. Rounded top of bars optional on all grates.
4. Pipe inlets with a grate shall be placed so that bars parallel direction of principle surface flow.
5. Complete joint penetration butt welds may be substituted for the fillet welds on all anchors.
6. Standard square, hexagon, round or equivalent headed anchors may be substituted for the right angle hooks on the anchors shown on this plan.
7. Grate and frame weights are based on welded grates (weights of face angles, steps, protection bars, etc. are not included).
8. Connect chain to grate and frame only at locations shown on the plans. When chain is required, do not use cast ductile iron grates.

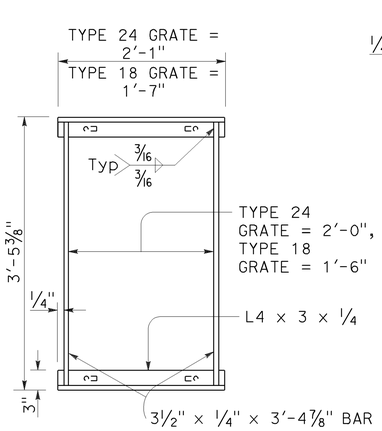

TYPICAL FRAME

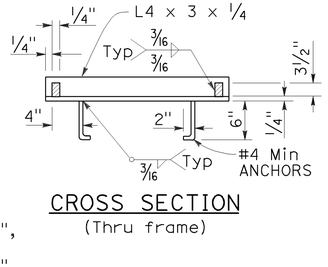

CROSS SECTION

(Thru frame)

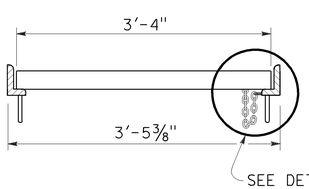

LONGITUDINAL SECTION

(Thru frame and grate)

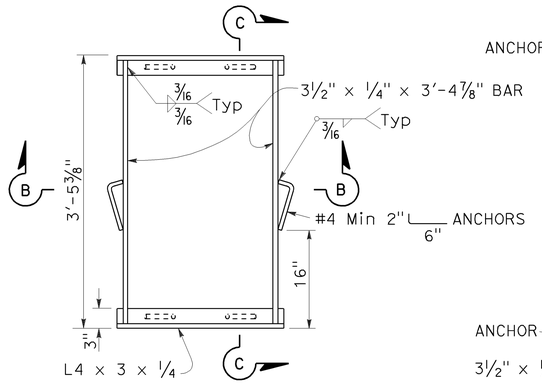

TYPICAL FRAME

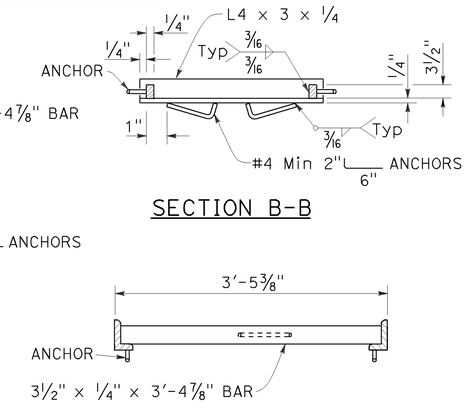

SECTION B-B

SECTION C-C

ALTERNATIVE ANCHOR FOR RECTANGULAR FRAME

(For details not shown, See Rectangular Frame Details)

RECTANGULAR FRAME DETAILS

(For all rectangular grates)

GRATE BAR SPACING TABLE

TYPE	No. OF BARS	CLEAR BAR SPACING	X
18-9	9	1⅜"	1 1/16"
24-9	9	2"	1 9/16"
24-12	12	1⅜"	1¼"

INLET TYPE	COVER TYPE	WEIGHT LB
OS	PLATE	174
OL-7	PLATE	170
OL-10	PLATE	170
OL-14	PLATE	170
OL-21	PLATE	170
OCP	PLATE	112
OCPI	PLATE	112
OCPI	REDWOOD	42
OMP	PLATE	177
OMPI	PLATE	177

INLET TYPE	GRATE TYPE	No. OF GRATES	WEIGHT LB
GDO	24-12	2	634
GOL-7	24-12	1	326
GOL-10	24-12	1	326
GO,G1,G2,G3,G4 (TYPE 24)	24-9	1	263
	24-12	1	326
G4 (TYPE 18),G5,G6	18-9	1	249
GT1	18-9	2	498
GT2	18-9	2	498
GT3	24-12	2	652
GT4	24-12	2	652
TRASH RACK			22
GRATE CHAIN			3

BASIS FOR Misc IRON & STEEL FINAL PAY WEIGHTS FOR DRAINAGE INLETS

(See Note 7)

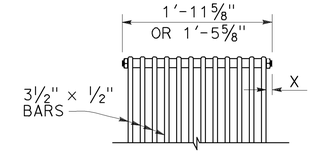

BOLTED END BLOCK

BOLTING DETAIL

ALTERNATIVE BOLTED GRATE

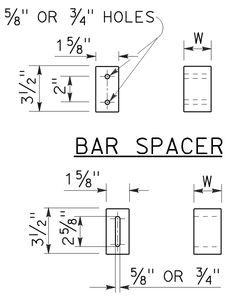

BAR SPACER

ALTERNATIVE SPACER

W = 1⅜" or 2"

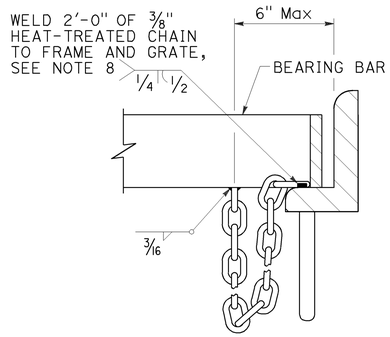

DETAIL "D"

(Steel grates only)

STATE OF CALIFORNIA
DEPARTMENT OF TRANSPORTATION

GRATE DETAILS No. 1

NO SCALE

RSP D77A DATED APRIL 19, 2013 SUPERSEDES RSP D77A DATED JULY 20, 2012 AND STANDARD PLAN D77A DATED MAY 20, 2011 - PAGE 164 OF THE STANDARD PLANS BOOK DATED 2010.

REVISED STANDARD PLAN RSP D77A

2010 REVISED STANDARD PLAN RSP D77A

Dist	COUNTY	ROUTE	POST MILES TOTAL PROJECT	SHEET No.	TOTAL SHEETS
05	SB	101	27.0/28.1	29	30

REGISTERED CIVIL ENGINEER

July 19, 2013
PLANS APPROVAL DATE

REGISTERED PROFESSIONAL ENGINEER
Gurinderpal Bhullar
No. C48815
Exp. 9-30-14
CIVIL
STATE OF CALIFORNIA

THE STATE OF CALIFORNIA OR ITS OFFICERS OR AGENTS SHALL NOT BE RESPONSIBLE FOR THE ACCURACY OR COMPLETENESS OF SCANNED COPIES OF THIS PLAN SHEET.

TO ACCOMPANY PLANS DATED 11-18-13

TABLE 1

TAPER LENGTH CRITERIA AND CHANNELIZING DEVICE SPACING

SPEED (S)	MINIMUM TAPER LENGTH * FOR WIDTH OF OFFSET 12 FEET (W)				MAXIMUM CHANNELIZING DEVICE SPACING		
					X	Y	Z **
	TANGENT 2L	MERGING L	SHIFTING L/2	SHOULDER L/3	TAPER	TANGENT	CONFLICT
mph	ft	ft	ft	ft	ft	ft	ft
20	160	80	40	27	20	40	10
25	250	125	63	42	25	50	12
30	360	180	90	60	30	60	15
35	490	245	123	82	35	70	17
40	640	320	160	107	40	80	20
45	1080	540	270	180	45	90	22
50	1200	600	300	200	50	100	25
55	1320	660	330	220	55	110	27
60	1440	720	360	240	60	120	30
65	1560	780	390	260	65	130	32
70	1680	840	420	280	70	140	35

* - For other offsets, use the following merging taper length formula for L:
For speed of 40 mph or less, $L = WS^2/60$
For speed of 45 mph or more, $L = WS$

Where: L = Taper length in feet
W = Width of offset in feet
S = Posted speed limit, off-peak 85th-percentile speed prior to work starting, or the anticipated operating speed in mph

** - Use for taper and tangent sections where there are no pavement markings or where there is a conflict between existing pavement markings and channelizers (CA).

TABLE 2

LONGITUDINAL BUFFER SPACE AND FLAGGER STATION SPACING

SPEED *	Min D **	DOWNGRADE Min D ***		
		-3%	-6%	-9%
mph	ft	ft	ft	ft
20	115	116	120	126
25	155	158	165	173
30	200	205	215	227
35	250	257	271	287
40	305	315	333	354
45	360	378	400	427
50	425	446	474	507
55	495	520	553	593
60	570	598	638	686
65	645	682	728	785
70	730	771	825	891

* - Speed is posted speed limit, off-peak 85th-percentile speed prior to work starting, or the anticipated operating speed in mph

** - Longitudinal buffer space or flagger station spacing

*** - Use on sustained downgrade steeper than -3 percent and longer than 1 mile.

TABLE 3

ADVANCE WARNING SIGN SPACING

ROAD TYPE	DISTANCE BETWEEN SIGNS *		
	A	B	C
	ft	ft	ft
URBAN - 25 mph OR LESS	100	100	100
URBAN - MORE THAN 25 mph TO 40 mph	250	250	250
URBAN - MORE THAN 40 mph	350	350	350
RURAL	500	500	500
EXPRESSWAY / FREEWAY	1000	1500	2640

* - The distances are approximate, are intended for guidance purposes only, and should be applied with engineering judgment. These distances should be adjusted by the Engineer for field conditions, if necessary, by increasing or decreasing the recommmended distances.

2010 REVISED STANDARD PLAN RSP T9

STATE OF CALIFORNIA
DEPARTMENT OF TRANSPORTATION

TRAFFIC CONTROL SYSTEM TABLES FOR LANE AND RAMP CLOSURES

NO SCALE

RSP T9 DATED JULY 19, 2013 SUPERSEDES RSP T9 DATED APRIL 19, 2013 THAT SUPPLEMENTS THE STANDARD PLANS BOOK DATED 2010.

REVISED STANDARD PLAN RSP T9

Dist	COUNTY	ROUTE	POST MILES TOTAL PROJECT	SHEET No.	TOTAL SHEETS
05	SB	101	27.0/28.1	30	30

REGISTERED CIVIL ENGINEER

April 19, 2013
PLANS APPROVAL DATE

REGISTERED PROFESSIONAL ENGINEER
Gurinderpal Bhullar
No. C48815
Exp. 9-30-14
CIVIL
STATE OF CALIFORNIA

THE STATE OF CALIFORNIA OR ITS OFFICERS OR AGENTS SHALL NOT BE RESPONSIBLE FOR THE ACCURACY OR COMPLETENESS OF SCANNED COPIES OF THIS PLAN SHEET.

TO ACCOMPANY PLANS DATED 11-18-13

NOTES:

See Revised Standard Plan RSP T9 for tables.

Use cone spacing X for taper segment, Y for tangent segment or Z for conflict situations, as approriate, per Table 1, unless X, Y, or Z cone spacing is shown on this sheet.

Unless otherwise specified in the special provisions, all temporary warning signs shall have black legend on fluorescent orange background.

California codes are designated by (CA). Otherwise, Federal (MUTCD) codes are shown.

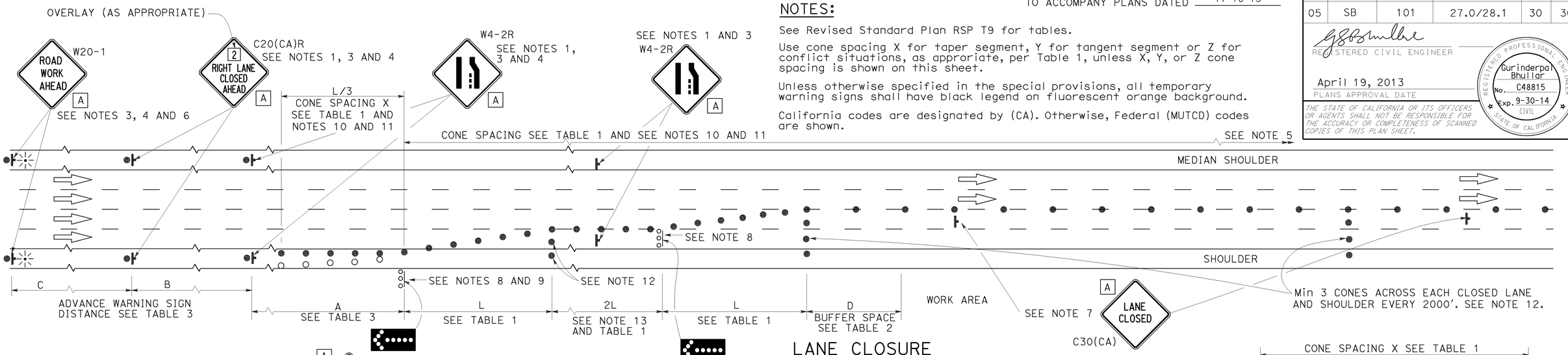

LANE CLOSURE

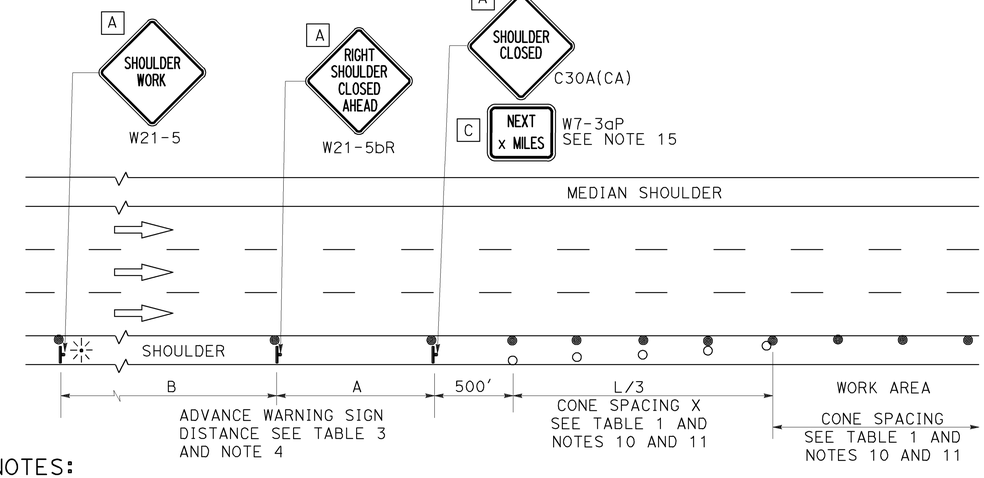

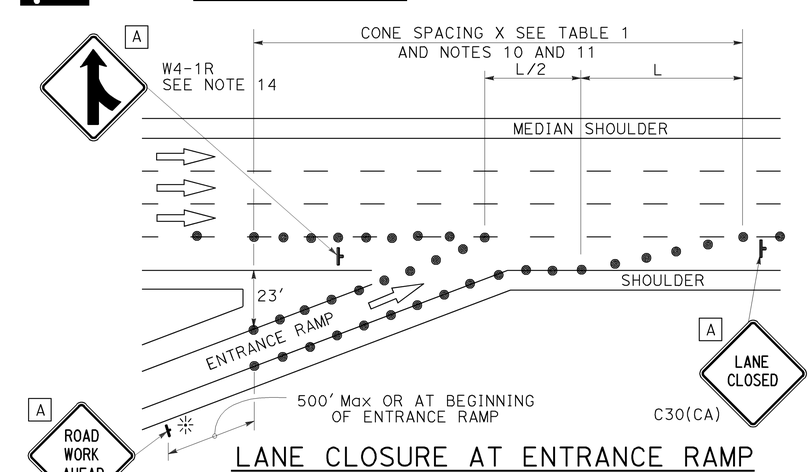

LANE CLOSURE AT ENTRANCE RAMP

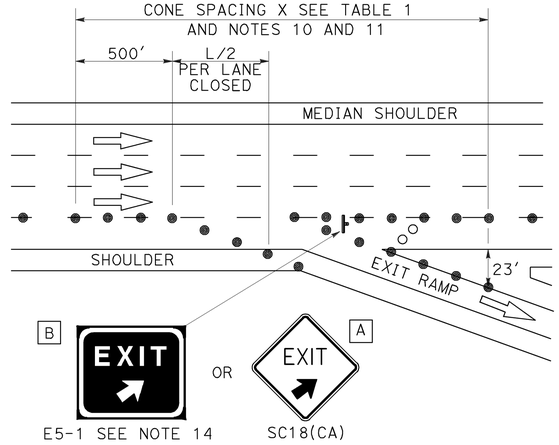

LANE CLOSURE AT EXIT RAMP

NOTES:

1. Median lane closures shall conform to the details as shown except that C20(CA)L and W4-2L signs shall be used.
2. At least one person shall be assigned to provide full time maintenance of traffic control devices for lane closures.
3. Duplicate sign installations are not required:
   a) On opposite shoulder if at least one-half of the available lanes remain open to traffic.
   b) In the median if the width of the median shoulder is less than 8' and the outside lanes are to be closed.
4. Each advance warning sign on each side of the roadway shall be equipped with at least two flags for daytime closure. Each flag shall be at least 16" x 16" in size and shall be orange or fluorescent red-orange in color. Flashing beacons shall be placed at the locations indicated for lane closure during hours of darkness.
5. A G20-2 "END ROAD WORK" sign, with minimum size of 48" x 24" as appropriate, shall be placed at the end of the lane closure unless the end of work area is obvious or ends within a larger project's limits.

SHOULDER CLOSURE

6. If the W20-1 sign would follow within 2000' of a stationary W20-1 or G20-1 "ROAD WORK NEXT _____ MILES", use a C20(CA) sign for the first advance warning sign.
7. Place a C30(CA) sign every 2000' throughout length of lane closure.
8. One flashing arrow sign for each lane closed. The flashing arrow signs shall be Type I.
9. A minimum 1500' of sight distance shall be provided where possible for vehicles approaching the first flashing arrow sign. Lane closures shall not begin at top of crest vertical curve or on a horizontal curve.
10. All cones used for lane closures during the hours of darkness shall be fitted with retroreflective bands (or sleeves) as specified in the specifications.
11. Portable delineators, placed at one-half the spacing indicated for traffic cones may be used instead of cones for daytime closures only.
12. Unless otherwise specified in the special provisions, a minimum of 3 cones shall be placed transversely across each closed lane and shoulder at each location where a taper across a traffic lane ends and every 2000' as shown on the "Lane Closure" detail. Two Type II barricades may be used instead of the 3 cones. The transverse alignment of the cones or barricades on the closed shoulder may be shifted from the transverse alignment to provide access to the work.
13. Unless otherwise specified in the special provisions, the 2L tangent shown along lane lines shall be used between the L tapers required for each closed traffic lane.
14. Unless otherwise specified in the special provisions, the E5-1 or SC18(CA) and W4-1 signs shall be used as shown.
15. A W7-3aP "NEXT___MILES" plaque must be used if theshoulder closure extends beyond the distance that can be perceived by road users.

LEGEND

- TRAFFIC CONE
- TRAFFIC CONE (OPTIONAL TAPER)
- TEMPORARY TRAFFIC CONTROL SIGN
- FLASHING ARROW SIGN (FAS)
- FAS SUPPORT OR TRAILER
- PORTABLE FLASHING BEACON

SIGN PANEL SIZE (Min)

A	48" x 48"
B	72" x 60"
C	36" x 30"

STATE OF CALIFORNIA
DEPARTMENT OF TRANSPORTATION

TRAFFIC CONTROL SYSTEM FOR LANE CLOSURE ON FREEWAYS AND EXPRESSWAYS

NO SCALE

RSP T10 DATED APRIL 19, 2013 SUPERSEDES STANDARD PLAN T10 DATED MAY 20, 2011 - PAGE 237 OF THE STANDARD PLANS BOOK DATED 2010.

REVISED STANDARD PLAN RSP T10

2010 REVISED STANDARD PLAN RSP T10