INDEX OF PLANS

SHEET No.	DESCRIPTION
1	TITLE AND LOCATION MAP
2-3	TYPICAL CROSS SECTIONS
4-8	CONSTRUCTION DETAILS
9-12	CONSTRUCTION AREA SIGNS
13-15	PAVEMENT DELINEATION DETAILS
16	PAVEMENT DELINEATION QUANTITIES
17-22	SUMMARY OF QUANTITIES
23	EROSION CONTROL QUANITIES
24-26	ELECTRICAL PLANS
27-48	REVISED STANDARD PLANS

THE STANDARD PLANS LIST APPLICABLE TO THIS CONTRACT IS INCLUDED IN THE NOTICE TO BIDDERS AND SPECIAL PROVISIONS BOOK.

STATE OF CALIFORNIA

DEPARTMENT OF TRANSPORTATION

ACHSSTP-P001(600)E

Dist	COUNTY	ROUTE	POST MILES TOTAL PROJECT	SHEET No.	TOTAL SHEETS
05	SLO	1	17.7/59.0	1	48

PROJECT PLANS FOR CONSTRUCTION ON

STATE HIGHWAY

IN SAN LUIS OBISPO COUNTY
IN AND NEAR SAN LUIS OBISPO AND SAN SIMEON
FROM HIGHLAND DRIVE TO 1.2 MILES
NORTH OF HEARST CASTLE ROAD

TO BE SUPPLEMENTED BY STANDARD PLANS DATED 2010

LOCATION MAP

NO SCALE

THE CONTRACTOR SHALL POSSESS THE CLASS (OR CLASSES) OF LICENSE AS SPECIFIED IN THE "NOTICE TO BIDDERS."

PROJECT MANAGER: AMY DONATELLO

DESIGN MANAGER: RON R. KRAEMER

PROJECT ENGINEER
REGISTERED CIVIL ENGINEER

6-8-15
DATE

KIAN K. HEMMATI
No. C81130
Exp. 9-30-15
CIVIL
REGISTERED PROFESSIONAL ENGINEER
STATE OF CALIFORNIA

June 8, 2015
PLANS APPROVAL DATE

THE STATE OF CALIFORNIA OR ITS OFFICERS OR AGENTS SHALL NOT BE RESPONSIBLE FOR THE ACCURACY OR COMPLETENESS OF SCANNED COPIES OF THIS PLAN SHEET.

CONTRACT No.	05-1C2404
PROJECT ID	0512000106

LAST REVISION 06-04-15
DATE PLOTTED => 24-JUL-2015
TIME PLOTTED => 08:49

Dist	COUNTY	ROUTE	POST MILES TOTAL PROJECT	SHEET No.	TOTAL SHEETS
05	SLO	1	17.7/59.0	2	48

6-8-15
REGISTERED CIVIL ENGINEER DATE

KIAN K. HEMMATI No. C81130 Exp.9-30-15 CIVIL
REGISTERED PROFESSIONAL ENGINEER — STATE OF CALIFORNIA

6-8-15
PLANS APPROVAL DATE

THE STATE OF CALIFORNIA OR ITS OFFICERS OR AGENTS SHALL NOT BE RESPONSIBLE FOR THE ACCURACY OR COMPLETENESS OF SCANNED COPIES OF THIS PLAN SHEET.

NOTES:

1. DIMENSIONS OF THE PAVEMENT STRUCTURES (STRUCTURAL SECTIONS) ARE SUBJECT TO TOLERANCES SPECIFIED IN THE STANDARD SPECIFICATIONS.
2. SUPERELEVATION AS SHOWN OR AS DIRECTED BY THE ENGINEER.
3. EXACT LOCATIONS AND TYPES OF DIKE, MIDWEST GAURDRAIL SYSTEM, AND REMOVE MBGR ARE SHOWN ON THE SUMMARY OF QUANTITY SHEETS.
4. EXISTING UTILITY FACILITIES HAVE NOT BEEN PLOTTTED ON THESE PLANS.
5. SEE CONSTRUCTION DETAILS FOR MGS VEGETATION CONTROL DIMENSIONS.

ORDER OF WORK:

1. CONSTRUCT FAILED SHOULDER WIDTH TO FG AT LOCATIONS SHOWN.
2. COLD PLANE SHOULDER AND PLACE HMA.

PAVEMENT CLIMATE REGION

CENTRAL COAST

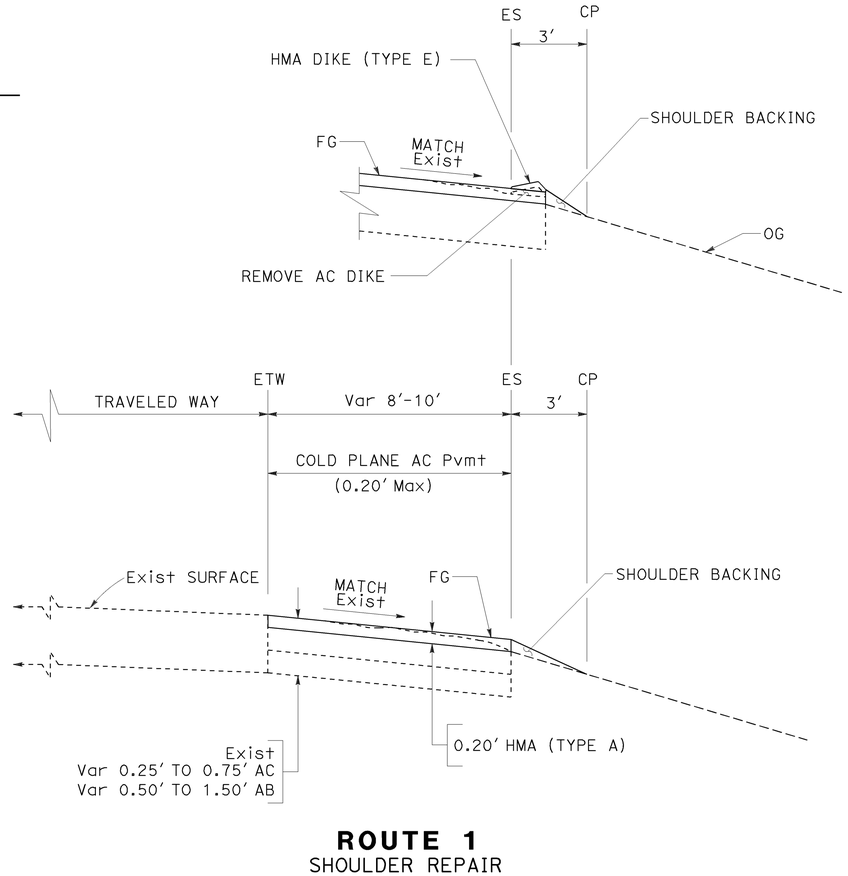

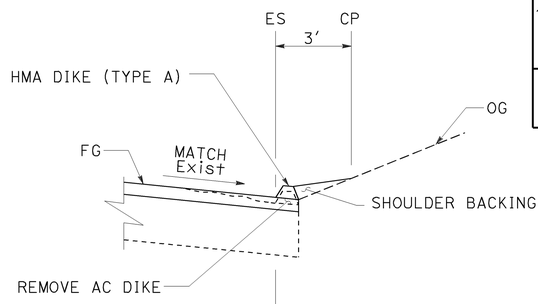

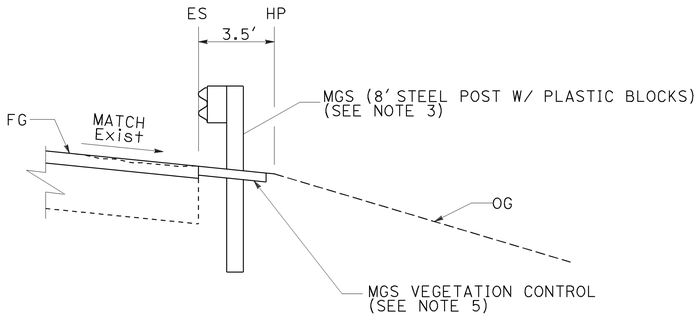

ROUTE 1
SHOULDER REPAIR

SOUTHBOUND	NORTHBOUND
PM 19.06 TO PM 19.18	PM 17.70 TO PM 17.96
PM 22.30 TO PM 22.34	PM 22.48 TO PM 22.62
PM 29.28 TO PM 29.36	PM 38.90 TO PM 38.97
PM R35.17 TO PM R35.19	
PM R35.89 TO PM R35.90	
PM R36.54 TO PM R36.62	
PM 43.09 TO PM 43.23	
PM 43.92 TO PM 43.95	

TYPICAL CROSS SECTIONS

NO SCALE

X-1

REVISED BY	DATE REVISED

CALCULATED-DESIGNED BY: RAHIM IBRAHIMI
CHECKED BY: KIAN K. HEMMATI
FUNCTIONAL SUPERVISOR: RON KRAEMER

STATE OF CALIFORNIA - DEPARTMENT OF TRANSPORTATION
Caltrans® DESIGN

LAST REVISION DATE PLOTTED => 12-JUN-2015
TIME PLOTTED => 10:55
06-08-15

Dist	COUNTY	ROUTE	POST MILES TOTAL PROJECT	SHEET No.	TOTAL SHEETS
05	SLO	1	17.7/59.0	3	48

6-8-15
REGISTERED CIVIL ENGINEER DATE

KIAN K. HEMMATI No. C81130 Exp.9-30-15 CIVIL
REGISTERED PROFESSIONAL ENGINEER
STATE OF CALIFORNIA

6-8-15
PLANS APPROVAL DATE

THE STATE OF CALIFORNIA OR ITS OFFICERS OR AGENTS SHALL NOT BE RESPONSIBLE FOR THE ACCURACY OR COMPLETENESS OF SCANNED COPIES OF THIS PLAN SHEET.

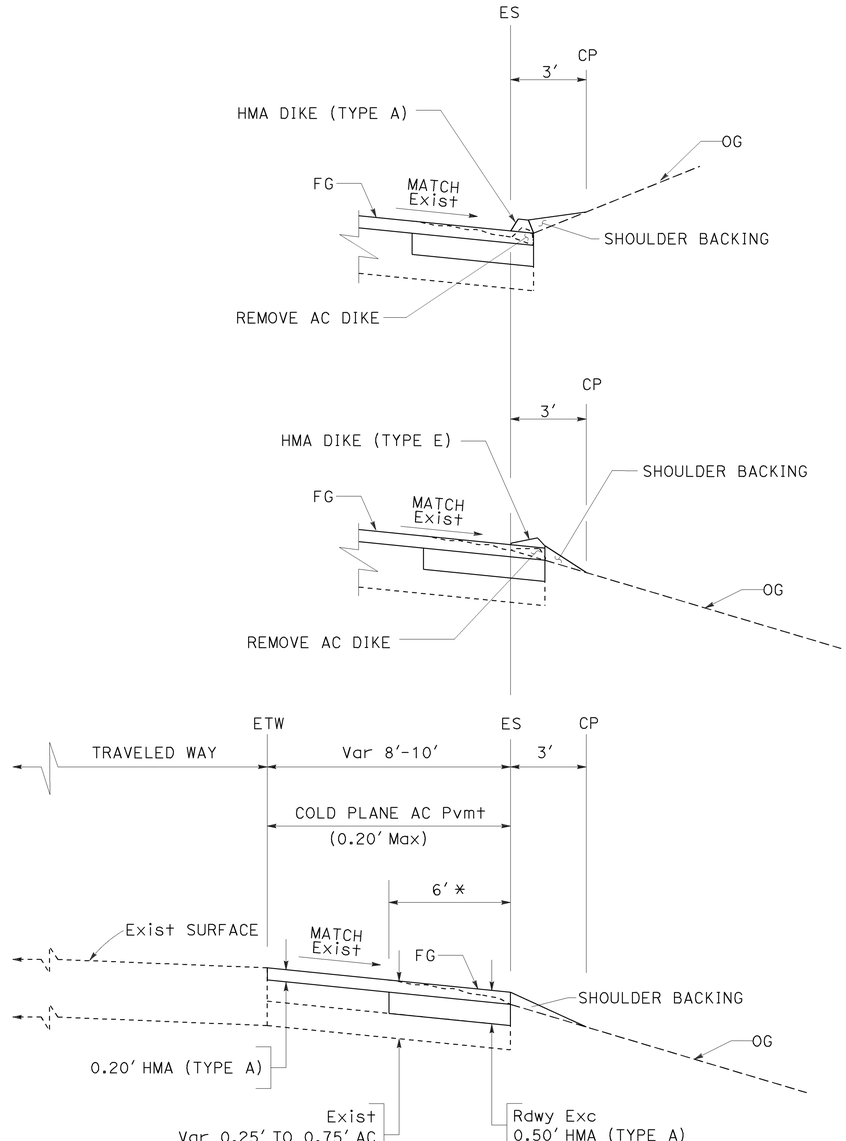

ROUTE 1

SHOULDER REPAIR

* FAILED SHOULDER WIDTH

SOUTHBOUND

PM R34.85 TO PM R34.86
PM 37.45 TO PM 37.57
PM 39.72 TO PM 39.75

NORTHBOUND

PM 22.29 TO PM 22.32
PM 23.01 TO PM 23.34
PM R35.46 TO PM R35.47
PM R36.56 TO PM R36.76
PM 37.45 TO PM 37.64
PM 38.04 TO PM 38.32
PM 38.51 TO PM 38.57
PM 39.30 TO PM 39.37
PM 42.49 TO PM 42.52
PM 43.47 TO PM 43.64

TYPICAL CROSS SECTIONS

NO SCALE

X-2

STATE OF CALIFORNIA - DEPARTMENT OF TRANSPORTATION
DESIGN
FUNCTIONAL SUPERVISOR: RON KRAEMER
CALCULATED-DESIGNED BY: RAHIM IBRAHIMI
CHECKED BY: KIAN K. HEMMATI
REVISED BY
DATE REVISED

LAST REVISION | DATE PLOTTED => 12-JUN-2015
06-08-15 | TIME PLOTTED => 10:55

BORDER LAST REVISED 7/2/2010
USERNAME => s109144
DGN FILE => 0512000106ca002.dgn
RELATIVE BORDER SCALE IS IN INCHES 0 1 2 3
UNIT 1451
PROJECT NUMBER & PHASE 05120001061

Dist	COUNTY	ROUTE	POST MILES TOTAL PROJECT	SHEET No.	TOTAL SHEETS
05	SLO	1	17.7/59.0	4	48

6-8-15
REGISTERED CIVIL ENGINEER DATE

KIAN K. HEMMATI
No. C81130
Exp. 9-30-15
CIVIL
REGISTERED PROFESSIONAL ENGINEER
STATE OF CALIFORNIA

6-8-15
PLANS APPROVAL DATE

THE STATE OF CALIFORNIA OR ITS OFFICERS OR AGENTS SHALL NOT BE RESPONSIBLE FOR THE ACCURACY OR COMPLETENESS OF SCANNED COPIES OF THIS PLAN SHEET.

NOTE:

1. TYPICAL RUMBLE STRIP DETAILS APPLY TO BOTH THE TWO AND FOUR LANE SECTIONS OF ROUTE 1.

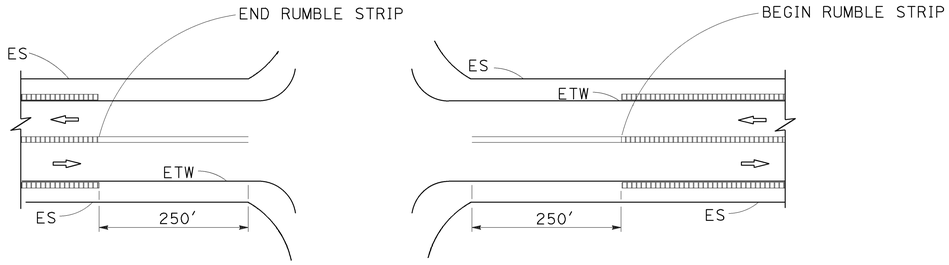

TYPICAL RUMBLE STRIP AT INTERSECTION

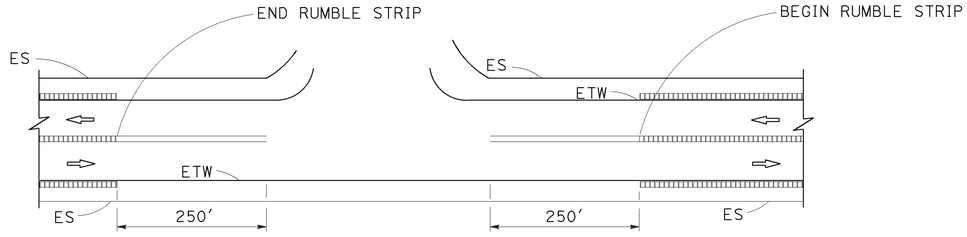

TYPICAL RUMBLE STRIP AT T-INTERSECTION

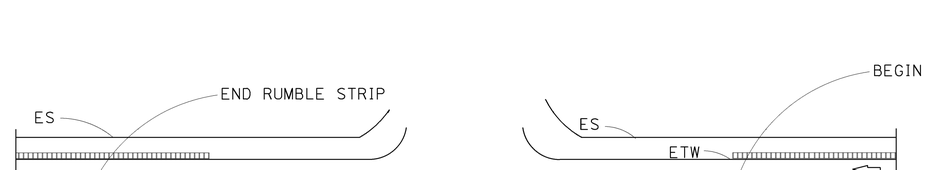

TYPICAL RUMBLE STRIP AT INTERSECTION WITH RIGHT TURN CHANNELIZATION

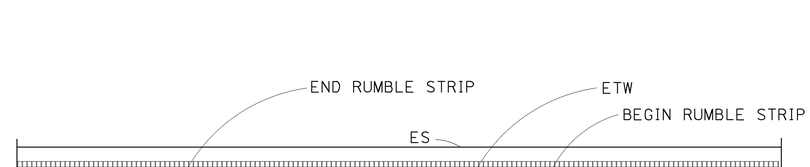

TYPICAL RUMBLE STRIP AT PRIVATE Dwy/ FARM ACCESS ROAD

CONSTRUCTION DETAILS

NO SCALE

C-1

CALCULATED-DESIGNED BY: KIAN K. HEMMATI
CHECKED BY: RON R. KRAEMER
FUNCTIONAL SUPERVISOR: RON KRAEMER
STATE OF CALIFORNIA - DEPARTMENT OF TRANSPORTATION
DESIGN
Caltrans

REVISED BY | DATE REVISED

LAST REVISION 06-08-15
DATE PLOTTED => 12-JUN-2015
TIME PLOTTED => 10:55

BORDER LAST REVISED 7/2/2010
USERNAME => s109144
DGN FILE => 0512000106ga001.dgn
RELATIVE BORDER SCALE IS IN INCHES 0 1 2 3
UNIT 1451
PROJECT NUMBER & PHASE 05120001061

Dist	COUNTY	ROUTE	POST MILES TOTAL PROJECT	SHEET No.	TOTAL SHEETS
05	SLO	1	17.7/59.0	5	48

6-8-15
REGISTERED CIVIL ENGINEER DATE

KIAN K. HEMMATI
No. C81130
Exp. 9-30-15
CIVIL
REGISTERED PROFESSIONAL ENGINEER
STATE OF CALIFORNIA

6-8-15
PLANS APPROVAL DATE

THE STATE OF CALIFORNIA OR ITS OFFICERS OR AGENTS SHALL NOT BE RESPONSIBLE FOR THE ACCURACY OR COMPLETENESS OF SCANNED COPIES OF THIS PLAN SHEET.

NOTES:

1. TYPICAL RUMBLE STRIP DETAILS APPLY TO BOTH THE TWO AND FOUR LANE SECTIONS OF ROUTE 1.
2. RUMBLE STRIPS STOP 1' ON EITHER SIDE OF LOOP DETECTOR CONDUCTORS TO PROTECT IN PLACE.

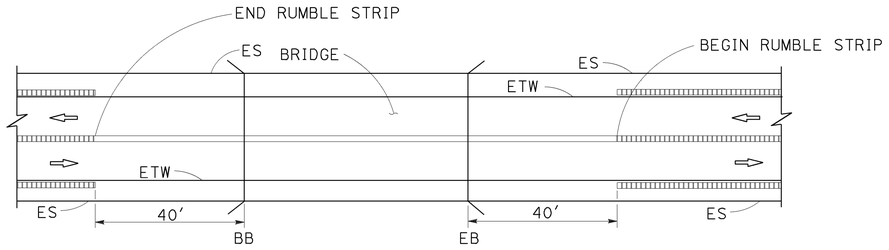

TYPICAL RUMBLE STRIP AT BRIDGES

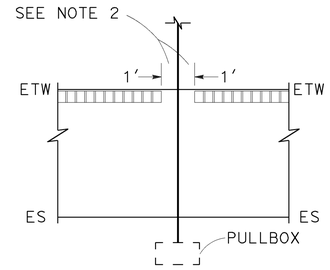

TYPICAL RUMBLE STRIP SKIP AT Exist HIGHWAY CENSUS AND SIGNAL LOOP DETECTORS

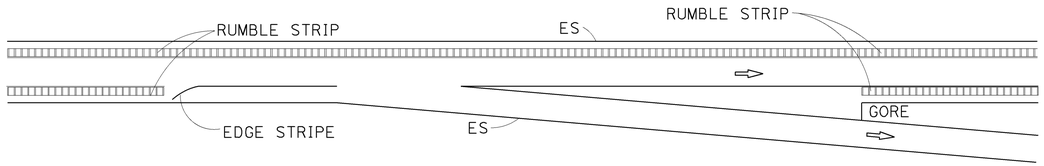

TYPICAL RUMBLE STRIP PLACEMENT NEAR ON AND OFF RAMPS

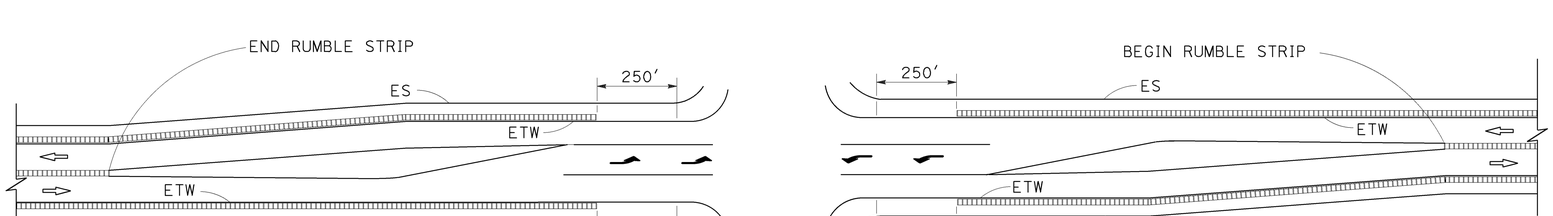

TYPICAL RUMBLE STRIP AT INTERSECTION WITH LEFT TURN CHANNELIZATION

CONSTRUCTION DETAILS

NO SCALE

C-2

STATE OF CALIFORNIA - DEPARTMENT OF TRANSPORTATION
DESIGN
FUNCTIONAL SUPERVISOR: RON KRAEMER
CALCULATED-DESIGNED BY: KIAN K. HEMMATI
CHECKED BY: RON R. KRAEMER
REVISED BY
DATE REVISED

LAST REVISION DATE PLOTTED => 12-JUN-2015
TIME PLOTTED => 10:55
06-08-15

BORDER LAST REVISED 7/2/2010
USERNAME => s109144
DGN FILE => 0512000106ga002.dgn
RELATIVE BORDER SCALE IS IN INCHES 0 1 2 3
UNIT 1451
PROJECT NUMBER & PHASE 05120001061

Dist	COUNTY	ROUTE	POST MILES TOTAL PROJECT	SHEET No.	TOTAL SHEETS
05	SLO	1	17.7/59.0	6	48

6-8-15
REGISTERED CIVIL ENGINEER DATE

KIAN K. HEMMATI
No. C81130
Exp. 9-30-15
CIVIL
REGISTERED PROFESSIONAL ENGINEER
STATE OF CALIFORNIA

6-8-15
PLANS APPROVAL DATE

THE STATE OF CALIFORNIA OR ITS OFFICERS OR AGENTS SHALL NOT BE RESPONSIBLE FOR THE ACCURACY OR COMPLETENESS OF SCANNED COPIES OF THIS PLAN SHEET.

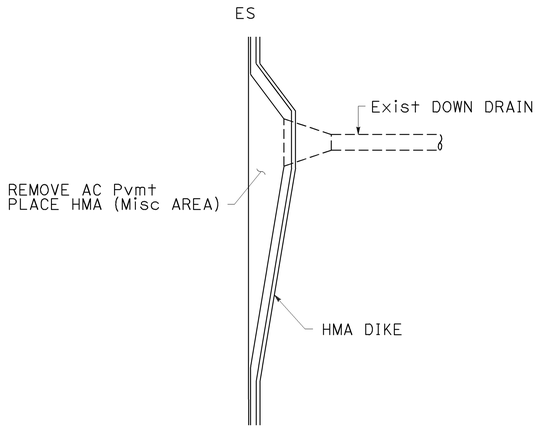

DOWN DRAIN

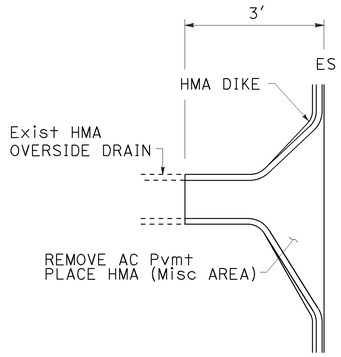

OVERSIDE DRAIN

PLAN

DRAINAGE INLET CONFORM

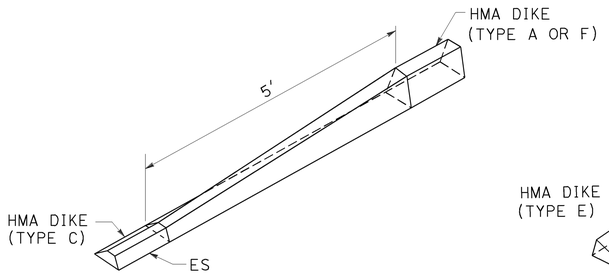

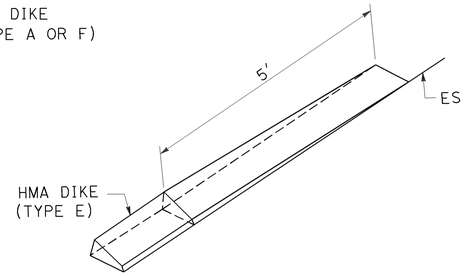

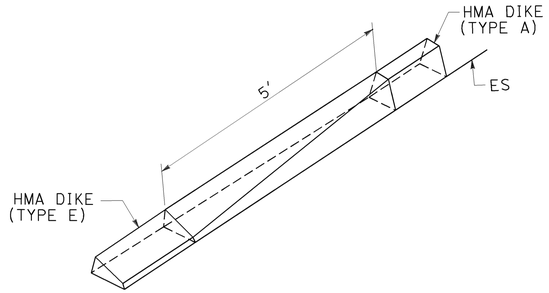

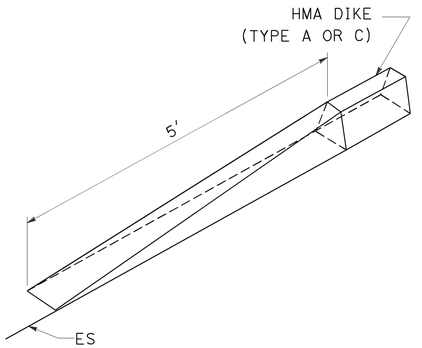

HMA DIKE TRANSITION DETAILS

CONSTRUCTION DETAILS

NO SCALE

C-3

STATE OF CALIFORNIA - DEPARTMENT OF TRANSPORTATION
DESIGN
Caltrans
FUNCTIONAL SUPERVISOR: RON KRAEMER
CALCULATED-DESIGNED BY: RAHIM IBRAHIMI
CHECKED BY: KIAN K. HEMMATI
REVISED BY
DATE REVISED

BORDER LAST REVISED 7/2/2010
USERNAME => s109144
DGN FILE => 0512000106ga003.dgn
RELATIVE BORDER SCALE IS IN INCHES 0 1 2 3
UNIT 1451
PROJECT NUMBER & PHASE 05120001061
LAST REVISION DATE PLOTTED => 12-JUN-2015
TIME PLOTTED => 10:55
06-08-15

Dist	COUNTY	ROUTE	POST MILES TOTAL PROJECT	SHEET No.	TOTAL SHEETS
05	SLO	1	17.7/59.0	7	48

6-8-15
REGISTERED CIVIL ENGINEER DATE

KIAN K. HEMMATI
No. C81130
Exp. 9-30-15
CIVIL
REGISTERED PROFESSIONAL ENGINEER
STATE OF CALIFORNIA

6-8-15
PLANS APPROVAL DATE

THE STATE OF CALIFORNIA OR ITS OFFICERS OR AGENTS SHALL NOT BE RESPONSIBLE FOR THE ACCURACY OR COMPLETENESS OF SCANNED COPIES OF THIS PLAN SHEET.

NOTES:

1. FOR ADDITIONAL DETAILS NOT SHOWN ON THIS PLAN, REFER TO RSP A77L1 AND RSP A77L2.
2. CONTROLLED RELEASING TERMINAL POST TO BE WOOD ONLY.

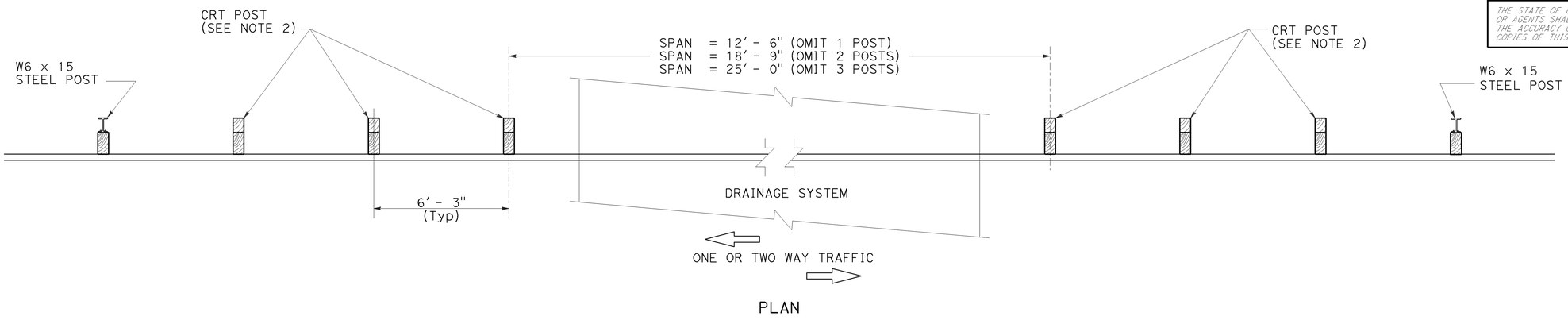

PLAN

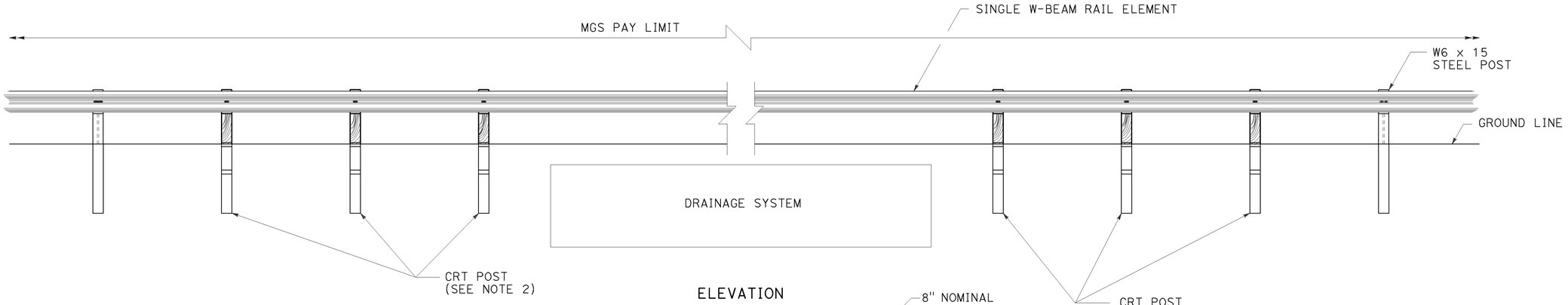

ELEVATION

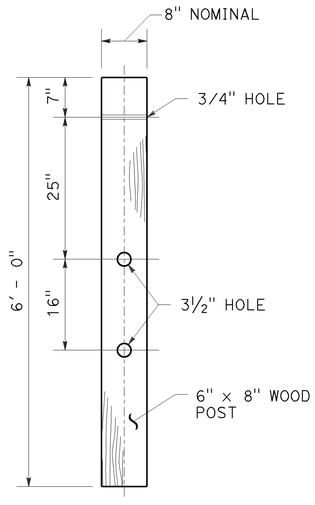

CONTROLLED RELEASING TERMINAL POST DETAIL

LONG SPAN NESTED GUARD RAILING

CONSTRUCTION DETAILS

NO SCALE

C-4

CALCULATED-DESIGNED BY
CHECKED BY
KIAN K. HEMMATI
RON R. KRAEMER
REVISED BY
DATE REVISED
FUNCTIONAL SUPERVISOR
RON KRAEMER
STATE OF CALIFORNIA - DEPARTMENT OF TRANSPORTATION
DESIGN

LAST REVISION DATE PLOTTED => 12-JUN-2015
TIME PLOTTED => 10:55
06-08-15

BORDER LAST REVISED 7/2/2010
USERNAME => s109144
DGN FILE => 0512000106ga004.dgn
RELATIVE BORDER SCALE IS IN INCHES 0 1 2 3
UNIT 1451
PROJECT NUMBER & PHASE 05120001061

Dist	COUNTY	ROUTE	POST MILES TOTAL PROJECT	SHEET No.	TOTAL SHEETS
05	SLO	1	17.7/59.0	8	48

6-8-15
REGISTERED CIVIL ENGINEER DATE

KIAN K. HEMMATI
No. C81130
Exp. 9-30-15
CIVIL
REGISTERED PROFESSIONAL ENGINEER
STATE OF CALIFORNIA

6-8-15
PLANS APPROVAL DATE

THE STATE OF CALIFORNIA OR ITS OFFICERS OR AGENTS SHALL NOT BE RESPONSIBLE FOR THE ACCURACY OR COMPLETENESS OF SCANNED COPIES OF THIS PLAN SHEET.

NOTES:

1. WHERE DIKE IS CONSTRUCTED UNDER RAILING, CONSTRUCT VEGETATION CONTROL TO BACK EDGE OF DIKE. WHERE PAVED SHOULDER IS CONSTRUCTED WITHIN 36" IN FRONT OF THE POST, CONSTRUCT VEGETATION CONTROL TO THE EDGE OF PAVED SHOULDER.
2. DIRECTION OF ADJACENT TRAFFIC INDICATED BY ⇦

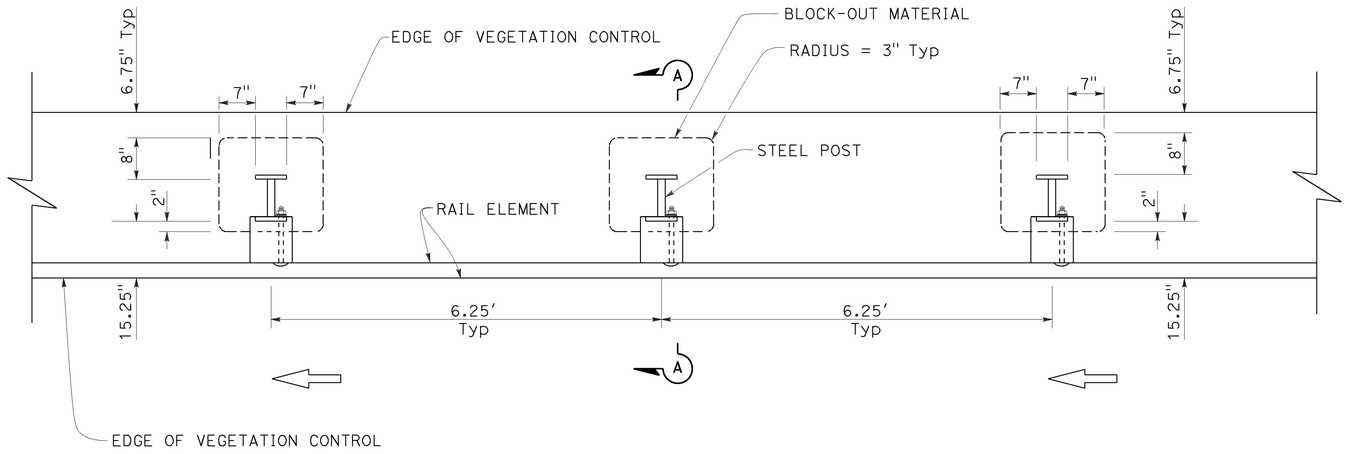

PLAN

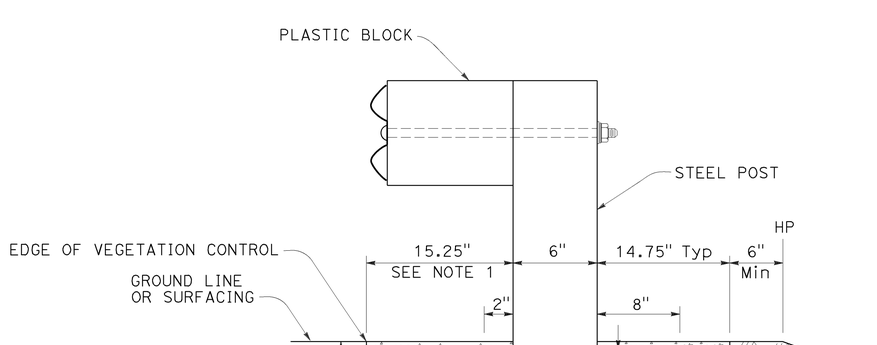

SECTION A-A

MGS Typ VEGETATION CONTROL FOR STANDARD RAILING SECTION

CONSTRUCTION DETAILS

NO SCALE **C-5**

CALCULATED-DESIGNED BY
CHECKED BY
KIAN K. HEMMATI
RON R. KRAEMER
REVISED BY
DATE REVISED
FUNCTIONAL SUPERVISOR
RON KRAEMER
STATE OF CALIFORNIA - DEPARTMENT OF TRANSPORTATION
DESIGN

LAST REVISION 06-08-15
DATE PLOTTED => 12-JUN-2015
TIME PLOTTED => 10:55

BORDER LAST REVISED 7/2/2010
USERNAME => s109144
DGN FILE => 0512000106ga005.dgn
RELATIVE BORDER SCALE IS IN INCHES 0 1 2 3
UNIT 1451
PROJECT NUMBER & PHASE 05120001061

Dist	COUNTY	ROUTE	POST MILES TOTAL PROJECT	SHEET No.	TOTAL SHEETS
05	SLO	1	17.7/59.0	9	48

REGISTERED CIVIL ENGINEER — 6-8-15 DATE

PLANS APPROVAL DATE — 6-8-15

REGISTERED PROFESSIONAL ENGINEER — FAWZI YAGHMOUR — No. 54750 — Exp. 12-31-15 — CIVIL — STATE OF CALIFORNIA

THE STATE OF CALIFORNIA OR ITS OFFICERS OR AGENTS SHALL NOT BE RESPONSIBLE FOR THE ACCURACY OR COMPLETENESS OF SCANNED COPIES OF THIS PLAN SHEET.

STATIONARY MOUNTED CONSTRUCTION AREA SIGNS

NOTE:

LOCATION OF CONSTRUCTION AREA SIGNS ARE APPROXIMATE. EXACT LOCATIONS WILL BE DETERMINED BY THE ENGINEER.

SIGN No. (X)	SIGN CODE		PANEL SIZE	SIGN MESSAGE	NUMBER OF POSTS AND SIZE	NUMBER OF SIGNS
	FEDERAL	CALIFORNIA				
(A)	W20-1		60" x 60"	ROAD WORK AHEAD	2 - 6" x 6"	2
(B)	W20-1		48" x 48"	ROAD WORK AHEAD	1 - 6" x 6"	96
(C)		G20-2	24" x 18"	END ROAD WORK	1 - 4" x 4"	95
(D)		G20-1	90" x 48"	ROAD WORK NEXT 42 MILES	2 - 6" x 6"	2

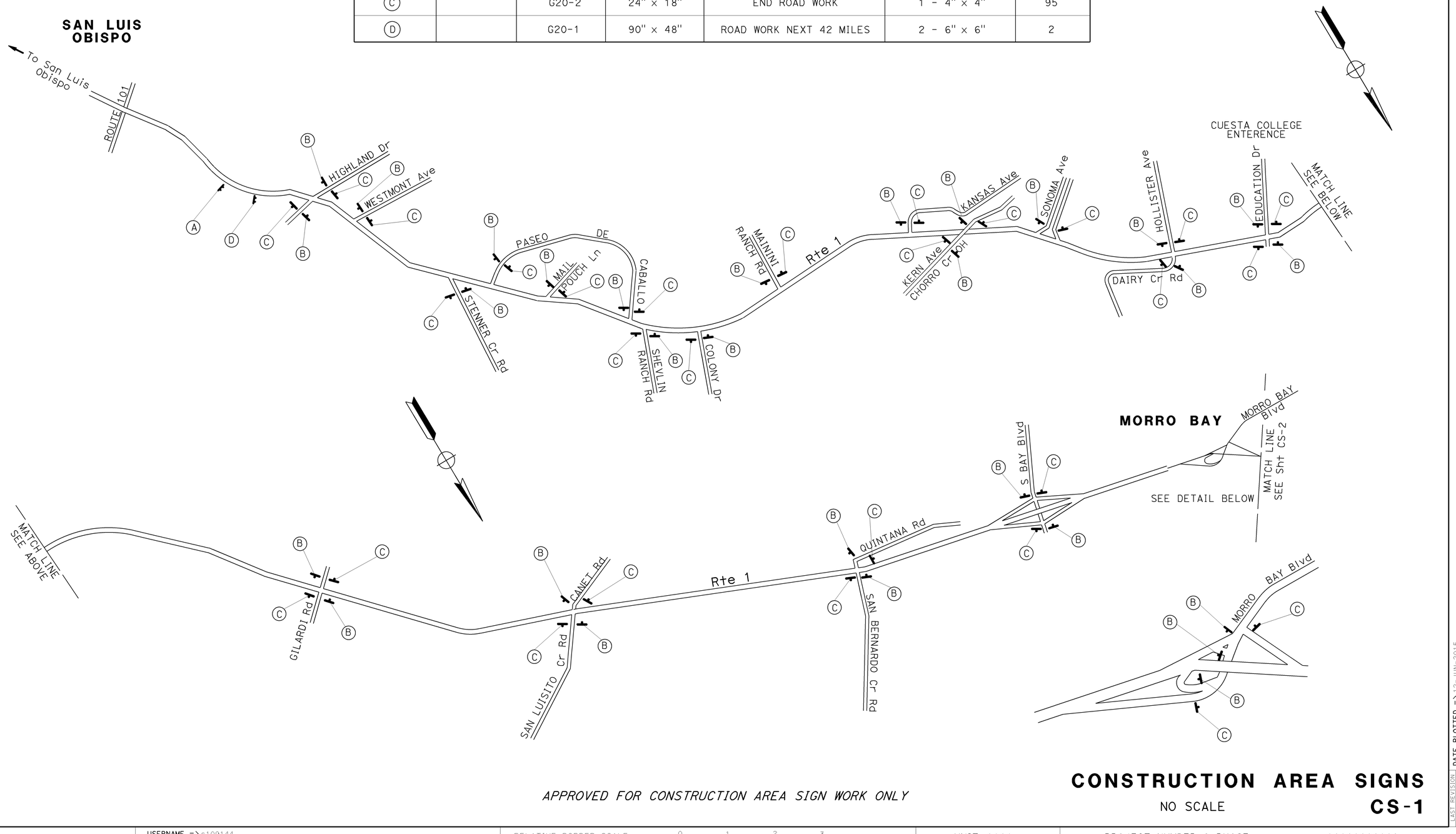

APPROVED FOR CONSTRUCTION AREA SIGN WORK ONLY

CONSTRUCTION AREA SIGNS

NO SCALE

CS-1

STATE OF CALIFORNIA - DEPARTMENT OF TRANSPORTATION
TRAFFIC DESIGN
FUNCTIONAL SUPERVISOR: MOHAMMED OATAMI
CALCULATED-DESIGNED BY: FAWZI YAGHMOUR
CHECKED BY: GURMIT GILL
REVISED BY / DATE REVISED

LAST REVISION — DATE PLOTTED => 12-JUN-2015 — TIME PLOTTED => 01:55 — 06-04-15

BORDER LAST REVISED 7/2/2010 | USERNAME => s109144 | DGN FILE => 0512000106la001.dgn | RELATIVE BORDER SCALE IS IN INCHES 0 1 2 3 | UNIT 0000 | PROJECT NUMBER & PHASE 00000000001

Dist	COUNTY	ROUTE	POST MILES TOTAL PROJECT	SHEET No.	TOTAL SHEETS
05	SLO	1	17.7/59.0	10	48

REGISTERED CIVIL ENGINEER — 6-8-15 DATE

FAWZI YAGHMOUR No. 54750 Exp 12-31-15 CIVIL — REGISTERED PROFESSIONAL ENGINEER — STATE OF CALIFORNIA

6-8-15
PLANS APPROVAL DATE

THE STATE OF CALIFORNIA OR ITS OFFICERS OR AGENTS SHALL NOT BE RESPONSIBLE FOR THE ACCURACY OR COMPLETENESS OF SCANNED COPIES OF THIS PLAN SHEET.

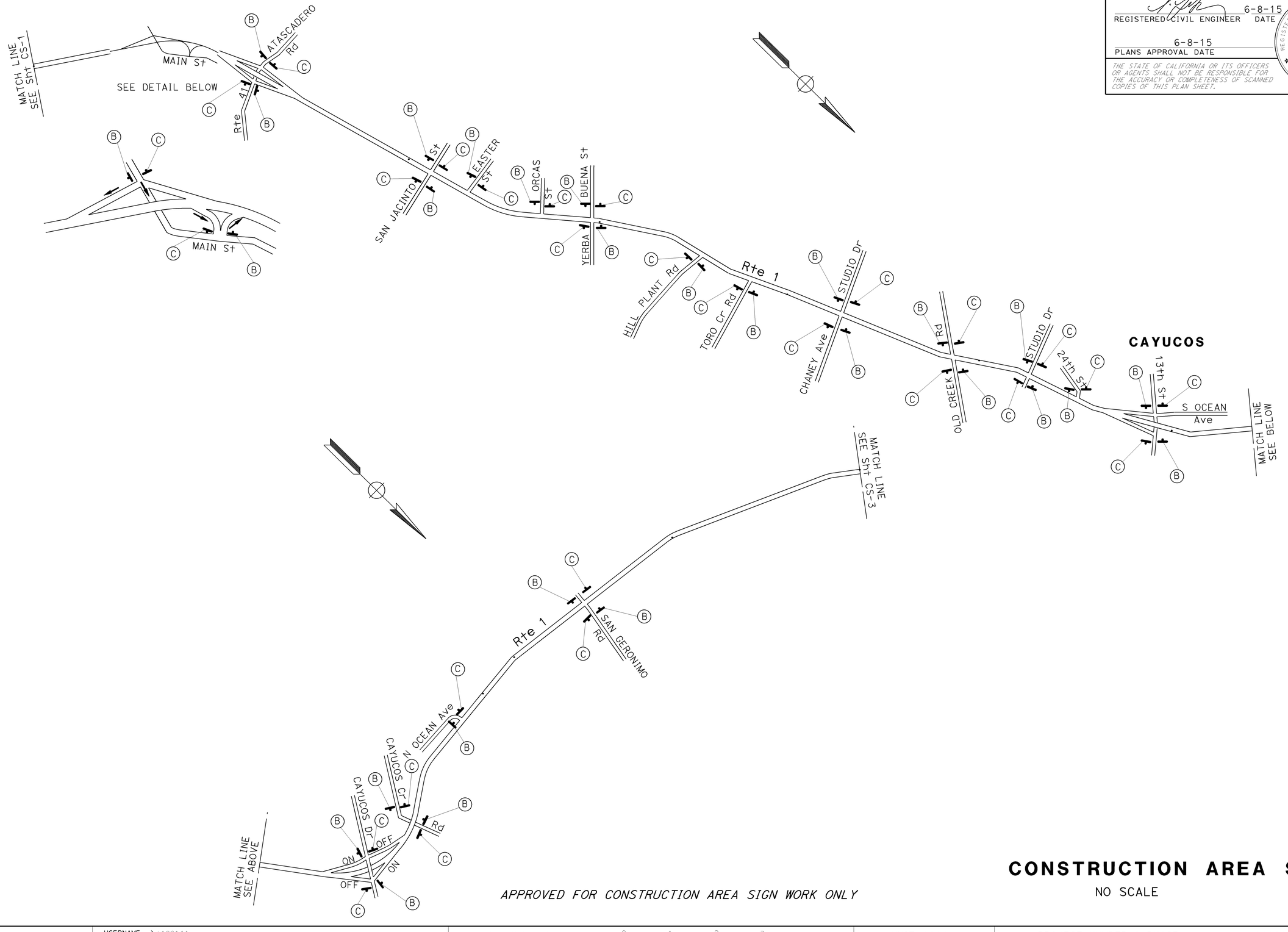

APPROVED FOR CONSTRUCTION AREA SIGN WORK ONLY

CONSTRUCTION AREA SIGNS

NO SCALE

CS-2

STATE OF CALIFORNIA - DEPARTMENT OF TRANSPORTATION
Caltrans® TRAFFIC DESIGN

FUNCTIONAL SUPERVISOR: MOHAMMED OATAMI

CALCULATED-DESIGNED BY: GURMIT GILL
CHECKED BY: FAWZI YAGHMOUR

REVISED BY | DATE REVISED

LAST REVISION | DATE PLOTTED => 12-JUN-2015
06-04-15 | TIME PLOTTED => 10:55

BORDER LAST REVISED 7/2/2010

USERNAME => s109144
DGN FILE => 05120001061a002.dgn

RELATIVE BORDER SCALE IS IN INCHES 0 1 2 3

UNIT 0000

PROJECT NUMBER & PHASE 00000000001

Dist	COUNTY	ROUTE	POST MILES TOTAL PROJECT	SHEET No.	TOTAL SHEETS
05	SLO	1	17.7/59.0	11	48

6-8-15
REGISTERED CIVIL ENGINEER DATE

FAWZI YAGHMOUR
No. 54750
Exp 12-31-15
CIVIL
REGISTERED PROFESSIONAL ENGINEER
STATE OF CALIFORNIA

6-8-15
PLANS APPROVAL DATE

THE STATE OF CALIFORNIA OR ITS OFFICERS OR AGENTS SHALL NOT BE RESPONSIBLE FOR THE ACCURACY OR COMPLETENESS OF SCANNED COPIES OF THIS PLAN SHEET.

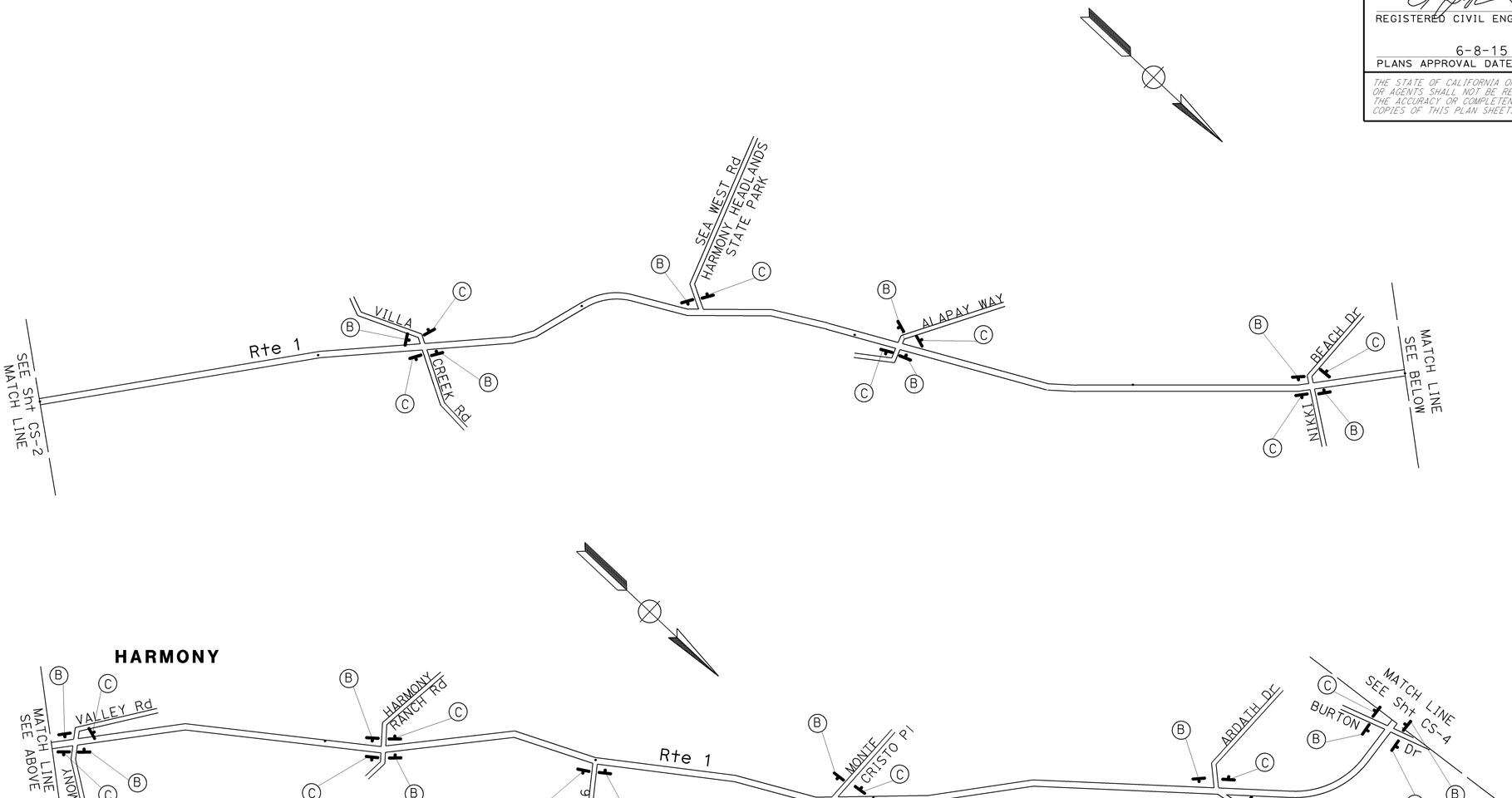

APPROVED FOR CONSTRUCTION AREA SIGN WORK ONLY

CONSTRUCTION AREA SIGNS

NO SCALE

CS-3

STATE OF CALIFORNIA - DEPARTMENT OF TRANSPORTATION
Caltrans®
TRAFFIC DESIGN

FUNCTIONAL SUPERVISOR: MOHAMMED QATAMI
CALCULATED-DESIGNED BY: GURMIT GILL
CHECKED BY: FAWZI YAGHMOUR
REVISED BY
DATE REVISED

LAST REVISION 06-04-15
DATE PLOTTED => 12-JUN-2015
TIME PLOTTED => 10:55

BORDER LAST REVISED 7/2/2010
USERNAME => s109144
DGN FILE => 05120001061a003.dgn
RELATIVE BORDER SCALE IS IN INCHES 0 1 2 3
UNIT 0000
PROJECT NUMBER & PHASE 00000000001

Dist	COUNTY	ROUTE	POST MILES TOTAL PROJECT	SHEET No.	TOTAL SHEETS
05	SLO	1	17.7/59.0	12	48

REGISTERED CIVIL ENGINEER — 6-8-15 DATE

FAWZI YAGHMOUR No. 54750 Exp 12-31-15 CIVIL — REGISTERED PROFESSIONAL ENGINEER — STATE OF CALIFORNIA

6-8-15
PLANS APPROVAL DATE

THE STATE OF CALIFORNIA OR ITS OFFICERS OR AGENTS SHALL NOT BE RESPONSIBLE FOR THE ACCURACY OR COMPLETENESS OF SCANNED COPIES OF THIS PLAN SHEET.

APPROVED FOR CONSTRUCTION AREA SIGN WORK ONLY

CONSTRUCTION AREA SIGNS

NO SCALE

CS-4

STATE OF CALIFORNIA - DEPARTMENT OF TRANSPORTATION
Caltrans®
TRAFFIC DESIGN

FUNCTIONAL SUPERVISOR: MOHAMMED QATAMI
CALCULATED-DESIGNED BY:
CHECKED BY: FAWZI YAGHMOUR
REVISED BY: GURMIT GILL
DATE REVISED:

LAST REVISION 06-04-15
DATE PLOTTED => 12-JUN-2015
TIME PLOTTED => 10:55

BORDER LAST REVISED 7/2/2010
USERNAME => s109144
DGN FILE => 0512000106la004.dgn
RELATIVE BORDER SCALE IS IN INCHES 0 1 2 3
UNIT 0000
PROJECT NUMBER & PHASE 00000000001

Dist	COUNTY	ROUTE	POST MILES TOTAL PROJECT	SHEET No.	TOTAL SHEETS
05	SLO	1	17.7/59.0	13	48

6-8-15
REGISTERED CIVIL ENGINEER DATE

KIAN K. HEMMATI No. C81130 Exp.9-30-15 CIVIL — REGISTERED PROFESSIONAL ENGINEER — STATE OF CALIFORNIA

6-8-15
PLANS APPROVAL DATE

THE STATE OF CALIFORNIA OR ITS OFFICERS OR AGENTS SHALL NOT BE RESPONSIBLE FOR THE ACCURACY OR COMPLETENESS OF SCANNED COPIES OF THIS PLAN SHEET.

NOTES:

1. DO NOT PLACE RUMBLE STRIPS WHERE THE OUTSIDE SHOULDER WIDTH IS LESS THAN 5′.
2. DO NOT PLACE RUMBLE STRIPS IN INSIDE SHOULDERS THAT ARE LESS THAN 3′ OR ADJACENT TO SLOTTED DRAINS.

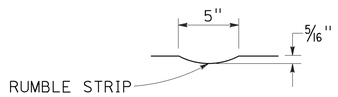

SECTION A-A

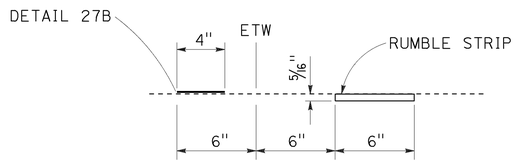

SECTION B-B

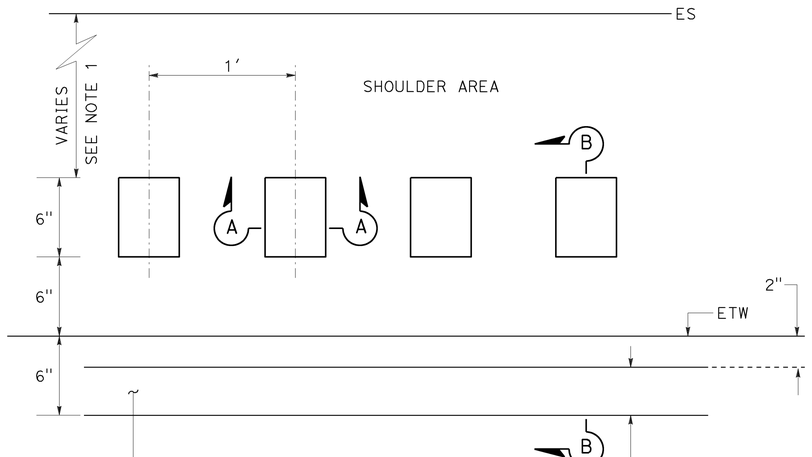

PLAN

EDGE LINE RUMBLE STRIP ADJACENT TO PCC LANES

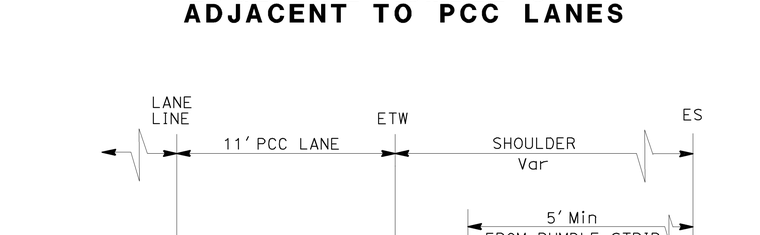

EDGE LINE RUMBLE STRIP PLACEMENT RIGHT OF DIRECTION OF TRAVEL ADJACENT TO PCC LANES PM 17.7/23.3

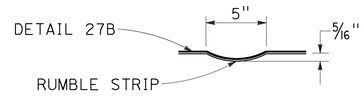

SECTION C-C

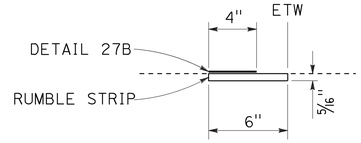

SECTION D-D

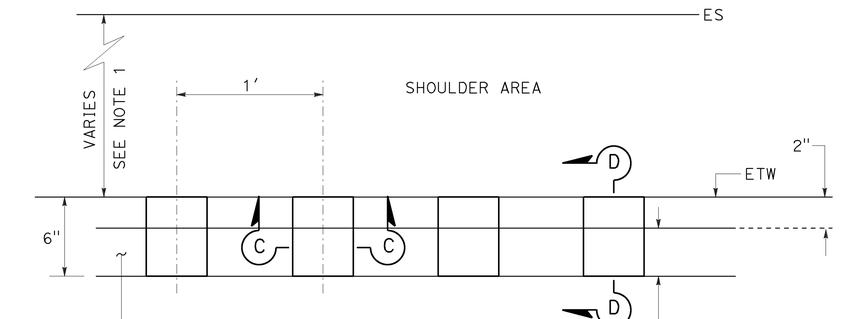

PLAN

EDGE LINE RUMBLE STRIP ADJACENT TO HMA LANES

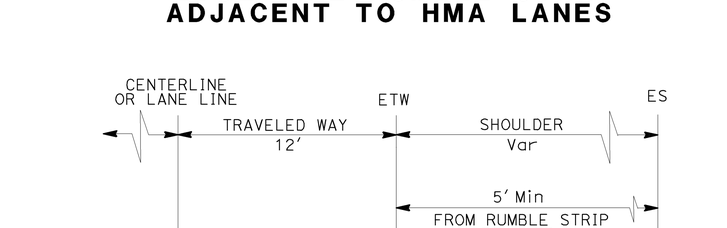

EDGE LINE RUMBLE STRIP PLACEMENT RIGHT OF DIRECTION OF TRAVEL ADJACENT TO HMA LANES PM 17.7/59.0

PAVEMENT DELINEATION DETAILS

NO SCALE

PDD-1

STATE OF CALIFORNIA - DEPARTMENT OF TRANSPORTATION
DESIGN
FUNCTIONAL SUPERVISOR: RON KRAEMER
CALCULATED-DESIGNED BY: KIAN K. HEMMATI
CHECKED BY: RON R. KRAEMER
REVISED BY
DATE REVISED

LAST REVISION: DATE PLOTTED => 12-JUN-2015 TIME PLOTTED => 10:55
06-08-15

BORDER LAST REVISED 7/2/2010
USERNAME => s109144
DGN FILE => 0512000106nb001.dgn
RELATIVE BORDER SCALE IS IN INCHES 0 1 2 3
UNIT 1451
PROJECT NUMBER & PHASE 05120001061

Dist	COUNTY	ROUTE	POST MILES TOTAL PROJECT	SHEET No.	TOTAL SHEETS
05	SLO	1	17.7/59.0	14	48

6-8-15
REGISTERED CIVIL ENGINEER DATE

KIAN K. HEMMATI
No. C81130
Exp. 9-30-15
CIVIL
REGISTERED PROFESSIONAL ENGINEER
STATE OF CALIFORNIA

6-8-15
PLANS APPROVAL DATE

THE STATE OF CALIFORNIA OR ITS OFFICERS OR AGENTS SHALL NOT BE RESPONSIBLE FOR THE ACCURACY OR COMPLETENESS OF SCANNED COPIES OF THIS PLAN SHEET.

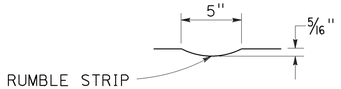

SECTION A-A

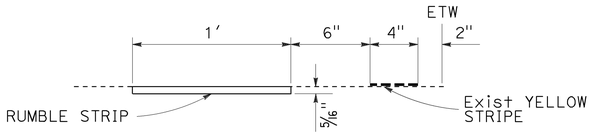

SECTION B-B

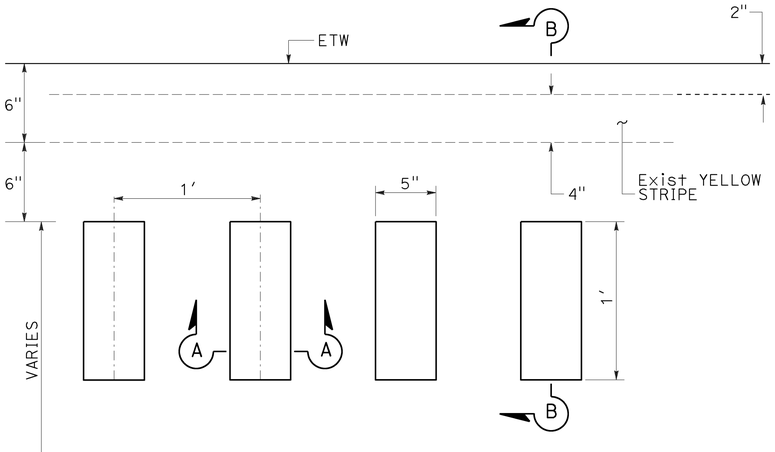

PLAN

EDGE LINE RUMBLE STRIP LEFT OF DIRECTION OF TRAVEL

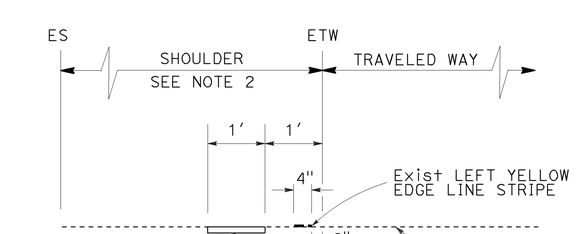

EDGE LINE RUMBLE STRIP PLACEMENT LEFT OF DIRECTION OF TRAVEL PM 17.7/37.0

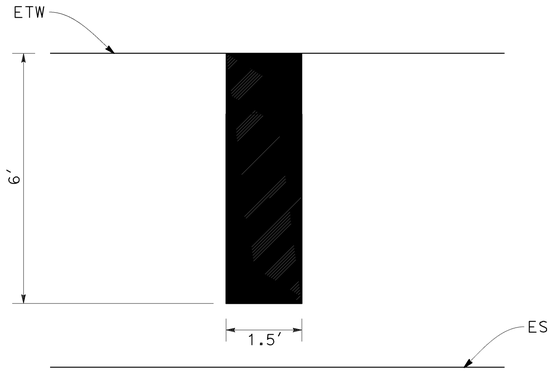

AERIAL PATROL MARKING

PAVEMENT DELINEATION DETAILS

NO SCALE

PDD-2

STATE OF CALIFORNIA - DEPARTMENT OF TRANSPORTATION
DESIGN
FUNCTIONAL SUPERVISOR: RON KRAEMER
CALCULATED-DESIGNED BY: KIAN K. HEMMATI
CHECKED BY: RON R. KRAEMER
REVISED BY
DATE REVISED

LAST REVISION DATE PLOTTED => 12-JUN-2015
06-08-15 TIME PLOTTED => 10:55

Dist	COUNTY	ROUTE	POST MILES TOTAL PROJECT	SHEET No.	TOTAL SHEETS
05	SLO	1	17.7/59.0	15	48

6-8-15
REGISTERED CIVIL ENGINEER DATE

KIAN K. HEMMATI
No. C81130
Exp. 9-30-15
CIVIL
REGISTERED PROFESSIONAL ENGINEER
STATE OF CALIFORNIA

6-8-15
PLANS APPROVAL DATE

THE STATE OF CALIFORNIA OR ITS OFFICERS OR AGENTS SHALL NOT BE RESPONSIBLE FOR THE ACCURACY OR COMPLETENESS OF SCANNED COPIES OF THIS PLAN SHEET.

LEGEND:

- 4" YELLOW THERMOPLASTIC TRAFFIC STRIPE (SPRAYABLE)
- TYPE D TWO-WAY YELLOW RETROREFLECTIVE Pvmt Mkr
- TYPE H ONE-WAY YELLOW RETROREFLECTIVE Pvmt Mkr
- DIRECTION OF TRAFFIC

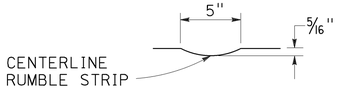

SECTION A-A

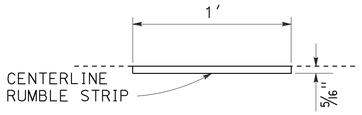

SECTION B-B

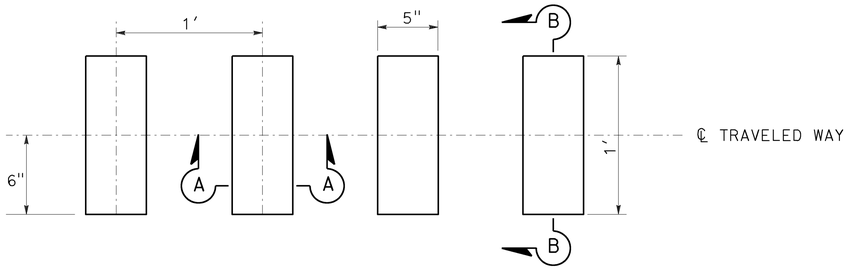

CENTERLINE RUMBLE STRIP
PLAN

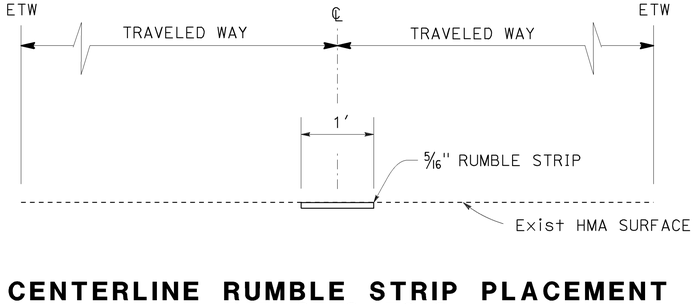

CENTERLINE RUMBLE STRIP PLACEMENT
PM 37.0/59.0

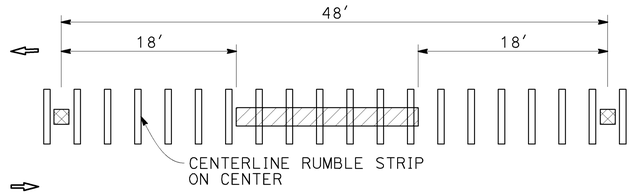

DETAIL 6
WITH CENTERLINE RUMBLE STRIP

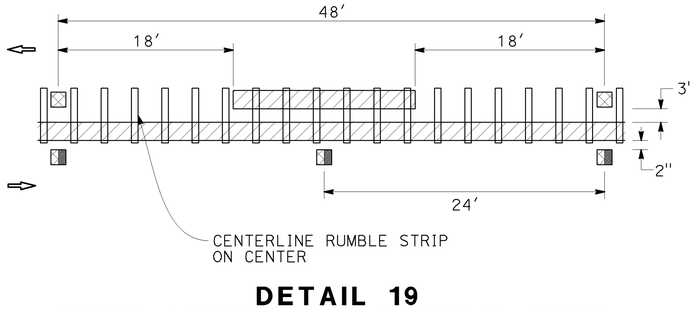

DETAIL 19
WITH CENTERLINE RUMBLE STRIP

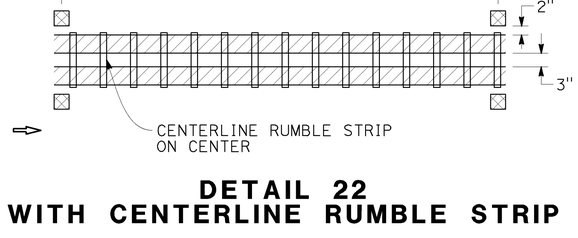

DETAIL 22
WITH CENTERLINE RUMBLE STRIP

PAVEMENT DELINEATION DETAILS
NO SCALE

PDD-3

STATE OF CALIFORNIA - DEPARTMENT OF TRANSPORTATION
DESIGN
FUNCTIONAL SUPERVISOR: RON KRAEMER
CALCULATED-DESIGNED BY: KIAN K. HEMMATI
CHECKED BY: RON R. KRAEMER
REVISED BY
DATE REVISED

LAST REVISION
DATE PLOTTED => 12-JUN-2015
TIME PLOTTED => 10:55

BORDER LAST REVISED 7/2/2010
USERNAME => s109144
DGN FILE => 0512000106nb003.dgn
RELATIVE BORDER SCALE IS IN INCHES 0 1 2 3
UNIT 1451
PROJECT NUMBER & PHASE 05120001061

Dist	COUNTY	ROUTE	POST MILES TOTAL PROJECT	SHEET No.	TOTAL SHEETS
05	SLO	1	17.7/59.0	16	48

6-8-15
REGISTERED CIVIL ENGINEER DATE

KIAN K. HEMMATI No. C81130 Exp.9-30-15 CIVIL
REGISTERED PROFESSIONAL ENGINEER
STATE OF CALIFORNIA

6-8-15
PLANS APPROVAL DATE

THE STATE OF CALIFORNIA OR ITS OFFICERS OR AGENTS SHALL NOT BE RESPONSIBLE FOR THE ACCURACY OR COMPLETENESS OF SCANNED COPIES OF THIS PLAN SHEET.

PAVEMENT DELINEATION QUANTITIES

LOCATION	DETAIL No.	PAVEMENT MARKER (RETROREFLECTIVE)		THERMOPLASTIC TRAFFIC STRIPE (SPRAYABLE)	THERMOPLASTIC PAVEMENT MARKING	REMOVE THERMOPLASTIC TRAFFIC STRIPE	REMOVE YELLOW THERMOPLASTIC TRFFIC STRIPE (HAZARDOUS WASTE)	REMOVE PAVEMENT MARKER	DESCRIPTION
		TYPE D	TYPE H	4"					
		EA	EA	LF	SQFT	LF	LF	EA	
MAINLINE (4 LANES) SLO 1 17.7/37.0 (NB & SB)	27B			409,116		409,116			
	27C			1,405		281			
					342				AERIAL PATROL MARKING
MAINLINE (2 LANES) SLO 1 37.0/59.0 (NB & SB)	6	706		33,845			8,461	706	
	19	678	1,355	64,986			40,616	2,033	
	22	2,513		60,266			60,266	2,513	
					396				AERIAL PATROL MARKING
SUBTOTAL		3,897	1,355	569,618	738	409,397	109,343	5,252	
TOTAL		5,252		569,618	738	409,397	109,343	5,252	

REVISED BY | DATE REVISED
RAHIM IBRAHIMI | KIAN K. HEMMATI
CALCULATED-DESIGNED BY | CHECKED BY
FUNCTIONAL SUPERVISOR: RON KRAEMER
STATE OF CALIFORNIA - DEPARTMENT OF TRANSPORTATION
DESIGN

PAVEMENT DELINEATION QUANTITIES

PDQ-1

LAST REVISION | DATE PLOTTED => 12-JUN-2015
06-08-15 | TIME PLOTTED => 10:55

Dist	COUNTY	ROUTE	POST MILES TOTAL PROJECT	SHEET No.	TOTAL SHEETS
05	SLO	1	17.7/59.0	17	48

6-8-15
REGISTERED CIVIL ENGINEER DATE

KIAN K. HEMMATI
No. C81130
Exp. 9-30-15
CIVIL
REGISTERED PROFESSIONAL ENGINEER
STATE OF CALIFORNIA

6-8-15
PLANS APPROVAL DATE

THE STATE OF CALIFORNIA OR ITS OFFICERS OR AGENTS SHALL NOT BE RESPONSIBLE FOR THE ACCURACY OR COMPLETENESS OF SCANNED COPIES OF THIS PLAN SHEET.

SHOULDER RUMBLE STRIP (HMA, GROUND-IN INDENTATIONS)

NORTHBOUND POST MILE	SIDE	Sta	REMARKS
17.80			HIGHLAND Dr
17.86 TO 17.95	Rt	4.75	
17.97			PRIVATE Dwy
17.99 TO 18.49	Rt	26.40	
18.59			STENNER CREEK Rd
18.65 TO 18.88	Rt	12.14	
18.89			PRIVATE Dwy
18.91 TO 19.55	Rt	33.79	
19.56			SHEVLIN RANCH Rd
19.58			PRIVATE Dwy
19.59 TO 19.73	Rt	7.39	
19.81			COLONY Dr
19.87 TO 20.25	Rt	20.06	
20.27			PRIVATE Dwy
20.29 TO 20.91	Rt	32.74	
20.96			KANSAS Ave
21.01 TO 21.14	Rt	6.86	
21.15 TO 21.23			CHORRO CREEK OH No. 49-63
21.24 TO 22.12	Rt	46.46	
22.23			DAIRY CREEEK Rd
22.28 TO 22.38	Rt	5.28	
22.40			PRIVATE Dwy
22.41 to 22.60	Rt	10.03	
22.68			EDUCATION Dr
22.73 TO 24.31	Rt	83.42	
24.36			GILARDI Rd
24.41 TO 25.54	Rt	59.66	
25.59			SAN LUISITO CREEK Rd
25.64 TO 26.94	Rt	68.64	
26.99			SAN BERNARDO CREEK Rd
27.04 TO 27.63	Rt	31.15	
27.73			SOUTH BAY Blvd OFF-RAMP
27.79 TO 27.88	Rt	4.75	
27.88 TO 27.90			SOUTH BAY Blvd UC No. 49-177
27.91 TO 28.00	Rt	4.75	
28.01			SOUTH BAY Blvd ON-RAMP
28.16 TO 28.48	Rt	16.90	
28.57			MORRO BAY Blvd OFF-RAMP
28.64 TO 28.74	Rt	5.28	
28.78			MORRO BAY Blvd OFF-RAMP
28.84 TO 29.56	Rt	38.02	
29.61 TO 29.63			NORTH MORRO BAY UC No. 49-109
29.67			MAIN St OFF-RAMP
29.74 to 29.83	Rt	4.75	
29.86			MAIN St ON-RAMP
29.94			Rte 41/1 OFF-RAMP
29.98 TO 30.00	Rt	1.06	
30.00 TO 30.02			MORRO CREEK Br No. 49-181
30.03 TO 30.13	Rt	5.28	
30.14 TO 30.16			Jct Rte 41/1 Sep No. 49-182
30.16 TO 30.26	Rt	5.28	
30.30			Rte 41/1 ON-RAMP
30.36 TO 31.06	Rt	36.96	
31.14	Rt		SAN JACINTO St
31.19 TO 31.90	Rt	37.49	
31.98			YERBA BUENA St
32.03 TO 32.50	Rt	24.82	
32.55			HILL PLANT Rd
32.61 TO 32.64			TORO CREEK Br No. 49-68
32.64 TO 32.77	Rt	6.86	
32.82			TORO CREEK Rd
SUBTOTAL		640.97	

SHOULDER RUMBLE STRIP (HMA, GROUND-IN INDENTATIONS)

NORTHBOUND POST MILE	SIDE	Sta	REMARKS
32.87 TO 33.24	Rt	19.54	
33.29			CHANEY Ave
33.34 TO 33.82	Rt	25.34	
33.87			OLD CREEK Rd
33.92 34.22	Rt	15.84	
34.27			STUDIO Dr
34.32 TO 34.45	Rt	6.86	
34.46 TO 34.48			OLD CREEK Br No. 49-70
34.49 TO 34.65	Rt	8.45	
R34.74			13th St OFF-RAMP
R34.80 TO R34.90	Rt	5.28	
R34.90 TO R34.94			OLD CREEK Rd No. 49-197
R34.94 TO R35.71	Rt	40.66	
R35.80			CAYUCOS Dr OFF-RAMP
R35.86 TO R36.09	Rt	12.14	
R36.15 TO R36.21			CAYUCOS CREEK Rd UC No. 49-199
R36.22 TO R36.85	Rt	33.26	
R36.87			PRIVATE Dwy
R36.89 TO R37.39	Rt	26.40	
37.44			SAN GERONIMO Rd
37.49 TO 38.66	Rt	61.78	
38.68			PRIVATE Dwy
38.70 TO 39.80	Rt	58.08	
39.82			PRIVATE Dwy
39.83 TO 40.26	Rt	22.70	
40.27 TO 40.29			VILLA CREEK Br No. 49-73
40.29 TO 40.34	Rt	2.64	
40.36			VILLA CREEK Rd
40.38 TO 41.38	Rt	52.80	
41.40			PRIVATE Dwy
41.42 TO 42.09	Rt	35.38	
42.14			ALAPAY WAY
42.19 TO 43.22	Rt	54.38	
43.23			PRIVATE Dwy
43.24 TO 43.59	Rt	18.48	
43.64			NIKKI BEACH Dr
43.69 TO 44.02	Rt	17.42	
44.07			HARMONY VALLEY Rd
44.12 TO 45.13	Rt	53.33	
45.18			HARMONY RANCH Rd
45.23 TO 45.92	Rt	36.43	
45.97			Jct Rte 46/1
46.02 TO 47.32	Rt	68.64	
47.34			PRIVATE Dwy
47.35 TO 48.14	Rt	41.71	
48.24			MAIN St
48.29 TO 48.90	Rt	32.21	
48.95			BURTON Dr
49.00 TO 49.88	Rt	46.46	
49.89 TO 49.91			SANTA ROSA CREEK Br No. 49-186
49.92 TO 50.04	Rt	6.34	
50.10			CAMBRIA Dr
50.15 TO 50.57	Rt	22.18	
50.62			WINDSOR Blvd
50.67 TO 50.95	Rt	14.78	
51.00			WEYMOUTH St
51.05 TO 51.30	Rt	13.20	
51.35			CAMBRIA PINES Rd
51.40 TO 52.12	Rt	38.02	
52.17			EXOTIC GARDEN Dr
52.22 TO 52.72	Rt	26.40	
SUBTOTAL		917.13	

SHOULDER RUMBLE STRIP (HMA, GROUND-IN INDENTATIONS)

NORTHBOUND POST MILE	SIDE	Sta	REMARKS
52.77			REST AREA EXIT
52.82 TO 52.87	Rt	2.64	
52.87 TO 52.95			SAN SIMEON CREEK Rd No. 49-46
52.96 TO 53.12	Rt	8.45	
53.17			SAN SIMEON CREEK Rd
53.22 TO 54.00	Rt	41.18	Shld NARROWS
54.29			VISTA DEL MAR Ave
54.50 TO 54.65	Rt	7.92	Shld WIDENS BACK UP
54.70			PICO Ave
54.75 TO 54.90			PICO CREEK Br No. 49-47
54.91 TO 54.97	Rt	3.17	
55.03			PICO CREEK Rd
55.08 TO 56.18	Rt	58.08	
56.20			PRIVATE Dwy
56.21 TO 56.28	Rt	3.70	
56.28 TO 56.37			LITTLE PICO CREEK Br
56.38 TO 56.79	Rt	21.65	
56.80			PRIVATE Dwy
56.82 TO 57.29	Rt	24.82	
57.30			PRIVATE Dwy
57.31 TO 57.71	Rt	21.12	
57.76			HEARST CASTLE Rd
57.81 TO 57.96	Rt	7.92	
57.98			PRIVATE Dwy
57.99 TO 58.14	Rt	7.92	
58.19			SAN SIMEON Rd
58.24 TO 58.85	Rt	32.21	
SUBTOTAL		240.78	
NB SUBTOTAL		1,798.88	

SUMMARY OF QUANTITIES
Q-1

STATE OF CALIFORNIA - DEPARTMENT OF TRANSPORTATION
DESIGN
FUNCTIONAL SUPERVISOR: RON KRAEMER
CALCULATED-DESIGNED BY: RAHIM IBRAHIMI
CHECKED BY: KIAN K. HEMMATI
REVISED BY
DATE REVISED

LAST REVISION DATE PLOTTED => 12-JUN-2015
TIME PLOTTED => 10:55
06-08-15

BORDER LAST REVISED 7/2/2010
USERNAME => s109144
DGN FILE => 0512000106pa001.dgn
RELATIVE BORDER SCALE IS IN INCHES 0 1 2 3
UNIT 1451
PROJECT NUMBER & PHASE 05120001061

Dist	COUNTY	ROUTE	POST MILES TOTAL PROJECT	SHEET No.	TOTAL SHEETS
05	SLO	1	17.7/59.0	18	48

6-8-15
REGISTERED CIVIL ENGINEER DATE

KIAN K. HEMMATI No. C81130 Exp.9-30-15 CIVIL — REGISTERED PROFESSIONAL ENGINEER — STATE OF CALIFORNIA

6-8-15
PLANS APPROVAL DATE

THE STATE OF CALIFORNIA OR ITS OFFICERS OR AGENTS SHALL NOT BE RESPONSIBLE FOR THE ACCURACY OR COMPLETENESS OF SCANNED COPIES OF THIS PLAN SHEET.

SHOULDER RUMBLE STRIP (HMA, GROUND-IN INDENTATIONS)

SOUTHBOUND POST MILE	SIDE	Sta	REMARKS
17.80			HIGHLAND Dr
17.93 TO 18.01	Rt	4.22	
18.06			WESTMONT Ave
18.08			PRIVATE Dwy/CALIFORNIA FIRE
18.12			PRIVATE Dwy/CALFORNIA FIRE
18.17 TO 18.57	Rt	21.12	
18.58			PRIVATE Dwy
18.59 TO 18.74	Rt	7.92	
18.79			PASEO DE CABALLO
18.84 TO 19.02	Rt	9.50	
19.07			MAIL POUCH LANE
19.12 TO 19.43	Rt	16.37	
19.48			PASEO DE CABALLO
19.53 TO 19.76	Rt	12.14	
19.81			COLONEY Dr
19.86 TO 20.21	Rt	18.48	
20.26			MAININI RANCH Rd
20.31 TO 20.89	Rt	30.62	
20.96			KANSAS Ave
21.08 TO 21.14	Rt	3.17	
21.15 TO 21.23			CHORRO CREEK OH No. 49-63
21.27 TO 21.48	Rt	11.09	
21.58			SONOMA Ave
21.77 TO 22.17	Rt	21.12	
22.23			HOLLISTER Ave
22.29 TO 22.62	Rt	17.42	
22.68			EDUCATION Dr
22.74 TO 24.31	Rt	82.90	
24.36			GILARDI Rd
24.41 TO 25.54	Rt	59.66	
25.59			CANET Rd
25.64 TO 26.93	Rt	68.11	
26.99			QUINTANA Rd
27.05 TO 27.70	Rt	34.32	
27.73			SOUTH BAY BLVD ON-RAMP
27.82 TO 27.87	Rt	2.64	
27.88 TO 27.90			SOUTH BAY BLVD UC NO. 49-177
27.91 TO 28.04	Rt	6.86	
28.09			SOUTH BAY BLVD OFF-RAMP
28.18 TO 28.65	Rt	24.82	
28.70			MORRO BAY BLVD ON-RAMP
28.79 TO 28.96	Rt	8.98	
29.04			MORRO BAY BLVD OFF-RAMP
29.12 TO 29.39	Rt	14.26	
29.43			MAIN ST ON-RAMP
29.50 TO 29.60	Rt	5.28	
29.61 to 29.63			NORTH MORRO BAY UC NO. 49-109
29.64 TO 29.77	Rt	6.86	
29.97 TO 29.99	Rt	1.06	
30.00 TO 30.02			MORRO CREEK BRIDGE NO. 49-181
30.02 TO 30.13	Rt	5.81	
30.14 TO 30.16			Jct ROUTE 41/1 Sep NO. 49-182
30.23 TO 30.29	Rt	3.17	
30.37			41 OFF-RAMP
30.45 TO 30.50	Rt	2.64	
30.56			PRIVATE Dwy
30.62 TO 31.10	Rt	25.34	
31.14			SAN JACINTO St
31.22 TO 31.31	Rt	4.75	
31.37			EASTER St
31.43 TO 31.69	Rt	13.73	
SUBTOTAL		544.36	

SHOULDER RUMBLE STRIP (HMA, GROUND-IN INDENTATIONS)

SOUTHBOUND POST MILE	SIDE	Sta	REMARKS
31.75			ORCAS St
31.81 TO 31.92	Rt	5.81	
31.98			YERBA BUENA St
32.04 TO 32.50	Rt	24.29	
32.55			HILL PLANT Rd
32.61 TO 32.64			TORO CREEK BRIDGE No. 49-48
32.66 TO 32.77	Rt	5.81	
32.82			TORO CREEK Rd
32.87 TO 33.23	Rt	19.01	
33.29			CHANEY Ave
33.35 TO 33.81	Rt	24.29	
33.87			OLD CREEK Rd
33.94 TO 34.22	Rt	14.78	
34.27			STUDIO Dr
34.33 TO 34.45	Rt	6.34	
34.46 TO 34.48			OLD CREEK BRIDGE No. 49-70
34.55			24th St
34.59 TO 34.68	Rt	4.75	
R34.70			13th St ON-RAMP
R34.77 TO R34.89	Rt	6.34	
R34.90 TO R34.94			OLD CREEK Rd No. 49-197
R34.95 TO R35.73	Rt	41.18	
R35.76			CAYUCOS Dr ON-RAMP
R35.84 TO R36.11	Rt	14.26	
R36.15			CAYUCOS Dr OFF-RAMP
R36.15 TO R36.21			CAYUCOS CREEK Rd UC No. 49-199
R36.28 TO R36.79	Rt	26.93	
R36.87			NORTH OCEAN Ave
R36.95 TO R37.39	Rt	23.23	
37.44			SAN GERONIMO Rd
37.49 TO 38.67	Rt	62.30	
38.68			PRIVATE Dwy
38.69 TO 39.81	Rt	59.14	
39.82			PRIVATE Dwy
39.83 TO 40.26	Rt	22.70	
40.27 TO 40.29			VILLA CREEK BRIDGE No. 49-73
40.36			VILLA CREEK Rd
40.40 TO 41.35	Rt	50.16	
41.40			PRIVATE Dwy TO HOMES
41.45 42.09	Rt	33.79	
42.14			ALAPAY Way
42.19 TO 43.18	Rt	52.27	
43.23			PRIVATE Dwy TO HOMES
43.28 to 43.59	Rt	16.37	
43.64			NIKKI BEACH Dr
43.69 TO 44.02	Rt	17.42	
44.07			HARMONEY VALLEY Rd
44.12 TO 45.13	Rt	53.33	
45.18			HARMONY RANCH Rd
45.23 TO 45.92	Rt	36.43	
45.97			Jct Rte 46/1
46.02 TO 46.79	Rt	40.66	
46.84			MONTE CRISTO PLACE
46.89 TO 47.29	Rt	21.12	
47.34			PRIVATE Dwy TO HOMES
47.39 TO 48.19	Rt	42.24	
48.24			ARDATH Dr
48.29 TO 48.90	Rt	32.21	
48.95			BURTON Dr
49.00 TO 49.88	Rt	46.46	
49.89 TO 49.91			SANTA ROSA CREEK Br No. 49-186
SUBTOTAL		803.62	

SHOULDER RUMBLE STRIP (HMA, GROUND-IN INDENTATIONS)

SOUTHBOUND POST MILE	SIDE	Sta	REMARKS
49.92 50.09	Rt	8.98	
50.10			CAMBRIA Dr
50.15 TO 50.57	Rt	22.18	
50.67			WINDSOR Blvd
50.67 TO 50.95	Rt	14.78	
51.00			WEYMOUTH St
51.05 TO 52.12	Rt	56.50	
52.17			EXOTIC GARDEN Dr
52.22 TO 52.72	Rt	26.40	
52.77			VISTA POINT
52.87 TO 52.95			SAN SIMEON CREEK Rd No. 49-46
53.07 TO 53.12	Rt	2.64	
53.17			LAKE PALM Dr
53.22 TO 54.00	Rt	41.18	Shld WIDENS BACK UP
54.29			VISTA DEL MAR Ave
54.50 TO 54.65	Rt	7.92	Shld NARROWS
54.70			PICO Ave
54.75 TO 54.90			PICO CREEK Br No. 49-47
54.96 TO 54.98	Rt	1.06	
55.03			PICO CREEK Rd
55.08 TO 55.40	Rt	16.90	
55.45			VISTA POINT
55.50 TO 55.85	Rt	18.48	
55.90			VISTA POINT
55.95 TO 55.96	Rt	0.53	
56.01			VISTA POINT
56.06 TO 56.27	RT	11.09	
56.28 TO 56.37			LITTLE PICO CREEK Br
56.38 TO 56.79	Rt	21.65	
56.80			PRIVATE Dwy
56.81 TO 57.00	Rt	10.03	
57.09			VISTA POINT
57.14 TO 57.73	Rt	31.15	
57.76			HEARST CASTLE Rd
57.86 TO 58.14	Rt	14.78	
58.19			SAN SIMEON Rd
58.26 TO 59.00	Rt	39.07	
SUBTOTAL		345.32	
SB SUBTOTAL		1,693.30	

SUMMARY OF QUANTITIES
Q-2

CALCULATED-DESIGNED BY	CHECKED BY	REVISED BY	DATE REVISED
RAHIM IBRAHIMI	KIAN K. HEMMATI		

FUNCTIONAL SUPERVISOR: RON KRAEMER

STATE OF CALIFORNIA - DEPARTMENT OF TRANSPORTATION — DESIGN

Caltrans

LAST REVISION DATE PLOTTED => 12-JUN-2015
TIME PLOTTED => 10:55
06-08-15

Dist	COUNTY	ROUTE	POST MILES TOTAL PROJECT	SHEET No.	TOTAL SHEETS
05	SLO	1	17.7/59.0	19	48

6-8-15
REGISTERED CIVIL ENGINEER DATE

KIAN K. HEMMATI
No. C81130
Exp. 9-30-15
CIVIL
REGISTERED PROFESSIONAL ENGINEER
STATE OF CALIFORNIA

6-8-15
PLANS APPROVAL DATE

THE STATE OF CALIFORNIA OR ITS OFFICERS OR AGENTS SHALL NOT BE RESPONSIBLE FOR THE ACCURACY OR COMPLETENESS OF SCANNED COPIES OF THIS PLAN SHEET.

SHOULDER RUMBLE STRIP (HMA, GROUND-IN INDENTATIONS)

NORTHBOUND POST MILE	SIDE	Sta	REMARKS
17.80			HIGHLAND Dr
18.59			STENNER CREEK Rd
18.89			PRIVATE Dwy
19.56			SHEVLIN RANCH Rd
19.59			PRIVATE Dwy
19.81			COLONEY Dr
20.27			PRIVATE Dwy
20.96			KANSAS Ave
21.15 TO 21.23			CHORRO CREEK OH No. 49-63
21.73 TO 21.92	Lt	10.03	
22.23			DAIRY CREEK Rd
22.26 TO 22.46	Lt	10.56	
22.40			PRIVATE Dwy
22.68			EDUCATION Dr
22.73 TO 24.24	Lt	79.73	
24.36			GILARDI Rd
24.48 TO 25.47	Lt	52.27	
25.59			SAN LUISITO CREEK Rd
25.72 TO 26.86	Lt	60.19	
26.99			SAN BERNARDINO CREEK Rd
27.11 TO 27.88	Lt	40.66	
27.73			SOUTH BAY Blvd OFF-RAMP
27.88 TO 27.90			SOUTH BAY Blvd UC No. 49-177
27.90 TO 29.61	Lt	90.29	
28.01			SOUTH BAY Blvd ON-RAMP
28.57			MORRO BAY Blvd OFF-RAMP
28.78			MORRO BAY Blvd ON-RAMP
29.61 TO 29.63			NORTH MORRO BAY UC No. 49-109
29.63 TO 30.00	Lt	19.54	
29.67			MAIN St OFF-RAMP
29.86			MAIN St ON-RAMP
29.94			Rte 41/1 OFF-RAMP
30.00 TO 30.02			MORRO CREEK Br No. 49-181
30.02 TO 30.14	Lt	6.34	
30.14 TO 30.16			Jct Rte 41/1 Sep No. 49-182
30.30			Rte 41/1 ON-RAMP
30.16 TO 30.99	Lt	43.82	
31.14			SAN JACINTO St
31.36 TO 31.62	Lt	13.73	
31.75 TO 31.87	Lt	6.34	
31.98			YERBA BUENA St
32.10 TO 32.51	Lt	21.65	
32.55			HILL PLANT Rd
32.61 32.64			TORO CREEK Br No. 49-68
32.64 TO 32.75	Lt	5.81	
32.82			TORO CREEK Rd
32.94 TO 33.17	Lt	12.14	
33.29			CHANEY Ave
33.41 TO 33.75	Lt	17.95	
33.87			OLD CREEK Rd
33.99 TO 34.14	Lt	7.92	
34.27			STUDIO Dr
34.38 TO 34.44	Lt	3.17	
NB SUBTOTAL		502.14	

SHOULDER RUMBLE STRIP (HMA, GROUND-IN INDENTATIONS)

SOUTHBOUND POST MILE	SIDE	Sta	REMARKS
17.80			HIGHLAND Dr
18.06			WESTMOUNT Ave
18.08			PRIVATE Dwy/CALIFORNIA FIRE
18.12			PRIVATE Dwy/CALIFORNIA FIRE
18.58			PRIVATE Dwy
18.79			PASEO DE CABALLO
19.07			MAIL POUCH Ln
19.48			PASEO DE CABALLO
20.26			MAININI RANCH Rd
20.96			KANSAS Ave
21.15 TO 21.23			CHORRO Cr OH No. 49-63
21.58			SONOMA Ave
21.75 TO 22.21	Lt	24.29	
22.23			HOLLISTER Ave
22.34 TO 22.66	Lt	16.90	
22.68			EDUCATION Dr
22.83 TO 24.27	Lt	76.03	
24.36			GILARDI Rd
24.51 TO 25.49	Lt	51.74	
25.59			CANET Rd
25.74 TO 26.89	Lt	60.72	
26.99			QUINTANA Rd
27.14 TO 27.88	Lt	39.07	
27.73			SOUTH BAY Blvd ON-RAMP
27.88 TO 27.90			SOUTH BAY Blvd UC No. 49-177
27.90 TO 29.61	Lt	90.29	
29.09			SOUTH BAY Blvd OFF-RAMP
28.70			MORRO BAY Blvd ON-RAMP
29.04			MORRO BAY Blvd OFF-RAMP
29.43			MAIN St ON-RAMP
29.61 TO 29.63			NORTH MORRO BAY UC No. 49-109
29.63 TO 30.00	Lt	19.54	
30.00 TO 30.02			MORRO CREEK Br No. 49-181
30.02 30.14	Lt	6.34	
30.14 TO 30.16			Jct Rte 41/1 Sep No. 49-182
30.16 TO 31.04	Lt	46.46	
30.37			Rte 41 OFF-RAMP
30.56			PRIVATE Dwy
31.14			SAN JACINTO St
31.37			EASTER St
31.39 TO 31.65	Lt	13.73	
31.75			ORCAS St
31.77 TO 31.90	Lt	6.86	
31.98			YERBA BUENA St
32.13 TO 32.53	Lt	21.12	
32.55			HILL PLANT Rd
32.61 TO 32.64			TORO CREEK Br No. 49-68
32.64 TO 32.79	Lt	7.92	
32.82			TORO CREEK Rd
32.97 TO 33.20	Lt	12.14	
33.29			CHANEY Ave
33.45 TO 33.77	Lt	16.90	
33.87			OLD CREEK Rd
34.02 TO 34.16	Lt	7.39	
34.27			STUDIO Dr
34.41 TO 34.46	Lt	2.64	
34.46 TO 34.48			OLD CREEK Br No. 49-70
34.55			24TH St
34.70			13TH St ON-RAMP
R34.90 TO R34.94			OLD CREEK Rd No. 49-197
R35.76			CAYUCOS Dr ON-RAMP
R36.15			CAYUCOS Dr OFF-RAMP
SB SUBTOTAL		520.08	

SHOULDER RUMBLE STRIP (HMA, GROUND-IN INDENTATIONS)

LOCATION/SHEET	Sta
Q-1 NB SUBTOTAL	1,798.88
Q-2 SB SUBTOTAL	1,693.30
Q-3 NB SUBTOTAL	502.14
Q-3 SB SUBTOTAL	520.08
TOTAL	4,514.40

SUMMARY OF QUANTITIES
Q-3

REVISED BY	DATE REVISED

CALCULATED-DESIGNED BY: RAHIM IBRAHIMI
CHECKED BY: KIAN K. HEMMATI
FUNCTIONAL SUPERVISOR: RON KRAEMER

STATE OF CALIFORNIA - DEPARTMENT OF TRANSPORTATION
DESIGN

LAST REVISION: DATE PLOTTED => 12-JUN-2015
06-08-15 TIME PLOTTED => 10:55

Dist	COUNTY	ROUTE	POST MILES TOTAL PROJECT	SHEET No.	TOTAL SHEETS
05	SLO	1	17.7/59.0	20	48

6-8-15
REGISTERED CIVIL ENGINEER DATE

KIAN K. HEMMATI No. C81130 Exp.9-30-15 CIVIL — REGISTERED PROFESSIONAL ENGINEER — STATE OF CALIFORNIA

6-8-15
PLANS APPROVAL DATE

THE STATE OF CALIFORNIA OR ITS OFFICERS OR AGENTS SHALL NOT BE RESPONSIBLE FOR THE ACCURACY OR COMPLETENESS OF SCANNED COPIES OF THIS PLAN SHEET.

CENTERLINE RUMBLE STRIP (HMA, GROUND-IN INDENTATIONS)

CENTERLINE POST MILE	Sta	REMARKS
R37.05 TO 37.39	17.95	
37.44		SAN GERONIMO Rd
37.49 TO 38.67	62.30	
38.68		PRIVATE Dwy
38.69 TO 39.81	59.14	
39.82		PRIVATE Dwy
39.83 TO 40.26	22.70	
40.27 TO 40.29		VILLA CREE Br No. 49-73
40.36		VILLA CREEK Rd
40.41 to 41.39	51.74	
41.40		PRIVATE Dwy
41.41 TO 42.09	35.90	
42.14		ALAPAY WAY
42.19 TO 43.22	54.38	
43.23		PRIVATE Dwy
43.24 TO 43.59	18.48	
43.64		NIKKI BEACH Dr
43.69 TO 43.92	12.14	
44.07		HARMONEY VALLEY Rd
44.31 TO 45.13	43.30	
45.18		HARMONEY RANCH Rd
45.23 TO 45.82	31.15	
45.97		Jct Rte 46/1
46.11 TO 46.77	34.85	
46.82		MONTE CRISTO PLACE
46.87 TO 47.33	24.29	
47.34		PRIVATE Dwy
47.35 TO 48.02	35.38	
48.24		MAIN St
48.41 TO 48.77	19.01	
48.95		BURTON Dr
49.12 TO 49.88	40.13	
49.89 TO 49.91		SANTA ROSA CREEK Br No. 49-186
49.92 TO 49.98	3.17	
50.10		CAMBRIA Dr
50.28 TO 50.49	11.09	
50.62		WINDSOR Blvd
50.78 TO 50.95	8.98	
51.00		WEYMOUTH St
51.05 TO 51.22	8.98	
51.35		CAMBRIA PINES Rd
51.54 52.12	30.62	
52.17		EXOTIC GARDEN Dr
52.22 TO 52.59	19.54	
52.77		REST AREA EXIT
52.87 TO 52.95		SAN SIMEON CREEK Rd No. 49-46
52.96 TO 53.02	3.17	
53.17		SAN SIMEON CREEK Rd
53.32 TO 54.06	39.07	
54.29		VISTA DEL MAR Ave
54.43 to 54.65	11.62	
54.70		PICO Ave
54.75 TO 54.90		PICO CREEK Br No. 49-47
54.91 TO 54.98	3.70	
55.03		PICO CREEK Rd
55.08 TO 55.40	16.90	
55.45		VISTA POINT
SUBTOTAL	719.68	

CENTERLINE RUMBLE STRIP (HMA, GROUND-IN INDENTATIONS)

CENTERLINE POST MILE	Sta	REMARKS
55.50 TO 55.85	18.48	
55.90		VISTA POINT
56.01		VISTA POINT
56.06 TO 56.19	6.86	
56.20		PRIVATE Dwy
56.21 TO 56.27	3.17	
56.28 TO 56.37		LITTLE PICO CREEK Br
56.38 TO 56.79	21.65	
56.80		PRIVATE Dwy
56.81 TO 57.04	12.14	
57.09		VISTA POINT
57.14 TO 57.29	7.92	
57.30		PRIVATE Dwy
57.31 TO 57.60	15.31	
57.76		HEARST CASTLE Rd
57.93 TO 57.97	2.11	
57.98		PRIVATE Dwy
57.99 TO 58.14	7.92	
58.19		SAN SIMEON Rd
58.24 TO 59.00	40.13	
SUBTOTAL	135.69	
TOTAL	855.37	

SURVEY MONUMENT

POST MILE	LOCATION	ABANDONED (N)	(TYPE D)
		EA	EA
R36.57	NB Rt Shld	1	1
37.58	NB Rt Shld	1	1
38.18	NB Rt Shld	1	1
38.90	NB Rt Shld	1	1
43.50	NB Rt Shld	1	1
	TOTAL		5

(N) - NOT A SEPARATE PAY ITEM, FOR INFORMATION ONLY

HOT MIX ASPHALT DIKE QUANTITIES

POST MILE	DIRECTION	PLACE HOT MIX ASPHALT DIKE (TYPE A)	PLACE HOT MIX ASPHALT DIKE (TYPE C)	PLACE HOT MIX ASPHALT DIKE (TYPE E)	* HOT MIX ASPHALT (TYPE A)	REMOVE ASPHALT CONCRETE DIKE
		LF	LF	LF	TON	LF
22.30 TO 22.34	SB			190	5.00	190
29.28 TO 29.36	SB			444	11.68	444
R34.85 TO R34.86	SB			58	1.53	58
R35.17 TO R35.19	SB	127			3.46	127
R35.89 TO R35.90	SB	53			1.44	53
R36.83 TO R36.84	SB		69		0.53	69
37.45 TO 37.57	SB			639	16.82	639
39.72 TO 39.75	SB			164	4.31	164
43.92 TO 43.95	SB			148	3.89	148
SB SUBTOTAL		180	69	1,643	48.66	1,892

POST MILE	DIRECTION	PLACE HOT MIX ASPHALT DIKE (TYPE A)	PLACE HOT MIX ASPHALT DIKE (TYPE C)	PLACE HOT MIX ASPHALT DIKE (TYPE E)	* HOT MIX ASPHALT (TYPE A)	REMOVE ASPHALT CONCRETE DIKE
		LF	LF	LF	TON	LF
22.29 TO 22.32	NB			158	4.17	158
22.48 TO 22.62	NB	739			20.21	739
23.01 TO 23.06	NB	238			6.50	238
23.07 TO 23.34	NB			1,399	36.83	1,399
R35.46 TO R35.47	NB			42	1.11	42
R36.56 TO R36.75	NB			1019	26.83	1,019
R36.75 TO R36.76	NB	37			1.01	37
37.45 TO 37.64	NB			993	26.13	993
38.04 TO 38.32	NB			1,468	38.64	1,468
38.51 TO 38.57	NB			312	8.20	312
38.90 TO 38.97	NB			391	10.29	391
39.30 TO 39.37	NB			349	9.17	349
42.49 TO 42.52	NB			206	5.42	206
NB SUBTOTAL		1,014	0	6,337	194.51	7,351
SB SUBTOTAL		180	69	1,643	48.66	1,892
TOTAL		1,194	69	7,980	243.17	9,243

* QUANTITY INCLUDED IN ROADWAY QUANTITIES TABLE, SEE SHEET Q-6

SUMMARY OF QUANTITIES
Q-4

REVISED BY | DATE REVISED
RAHIM IBRAHIMI | KIAN K. HEMMATI
CALCULATED-DESIGNED BY | CHECKED BY
FUNCTIONAL SUPERVISOR: RON KRAEMER
STATE OF CALIFORNIA - DEPARTMENT OF TRANSPORTATION
DESIGN
Caltrans

LAST REVISION | DATE PLOTTED => 12-JUN-2015 | TIME PLOTTED => 10:55
06-08-15

BORDER LAST REVISED 7/2/2010 | USERNAME => s109144 | DGN FILE => 0512000106pa004.dgn | RELATIVE BORDER SCALE IS IN INCHES 0 1 2 3 | UNIT 1451 | PROJECT NUMBER & PHASE 05120001061

Dist	COUNTY	ROUTE	POST MILES TOTAL PROJECT	SHEET No.	TOTAL SHEETS
05	SLO	1	17.7/59.0	21	48

6-8-15
REGISTERED CIVIL ENGINEER DATE

KIAN K. HEMMATI No. C81130 Exp.9-30-15 CIVIL — REGISTERED PROFESSIONAL ENGINEER — STATE OF CALIFORNIA

6-8-15
PLANS APPROVAL DATE

THE STATE OF CALIFORNIA OR ITS OFFICERS OR AGENTS SHALL NOT BE RESPONSIBLE FOR THE ACCURACY OR COMPLETENESS OF SCANNED COPIES OF THIS PLAN SHEET.

DOWNDRAIN

POST MILE	REMOVE ASPHALT CONCRETE PAVEMENT (SQFT) *	PLACE HOT MIX ASPHALT (Misc AREA) *	HOT MIX ASPHALT (TYPE A) *	OBJECT MARKER (TYPE L)	TEMPORARY DRAINAGE INLET PROTECTION
	SQFT	SQYD	TON	EA	EA
SB 23.30 RIGHT SIDE	18.0	2.0	0.45	1	1
SB 37.52 RIGHT SIDE	18.0	2.0	0.45	1	1
NB 22.29 RIGHT SIDE	18.0	2.0	0.45	1	1
NB 22.32 RIGHT SIDE	18.0	2.0	0.45	1	1
NB 23.12 RIGHT SIDE	18.0	2.0	0.45	1	1
NB 23.16 RIGHT SIDE	18.0	2.0	0.45	1	1
NB 23.20 RIGHT SIDE	18.0	2.0	0.45	1	1
NB 23.23 RIGHT SIDE	18.0	2.0	0.45	1	1
NB 23.27 RIGHT SIDE	18.0	2.0	0.45	1	1
NB 37.51 RIGHT SIDE	18.0	2.0	0.45	1	1
NB 37.56 RIGHT SIDE	18.0	2.0	0.45	1	1
NB 38.13 RIGHT SIDE	18.0	2.0	0.45	1	1
NB 38.27 RIGHT SIDE	18.0	2.0	0.45	1	1
SUBTOTAL	234.0	26.0	5.85	13	13

* QUANTITY INCLUDED IN ROADWAY QUANTITIES TABLE, SEE SHEET Q-6

OVERSIDE DRAIN

POST MILE	REMOVE ASPHALT CONCRETE PAVEMENT (SQFT) *	PLACE HOT MIX ASPHALT (Misc AREA) *	HOT MIX ASPHALT (TYPE A) *	OBJECT MARKER (TYPE L)	TEMPORARY DRAINAGE INLET PROTECTION
	SQFT	SQYD	TON	EA	EA
NB 23.06 RIGHT SIDE	19.5	2.2	0.49	1	1
NB 23.30 RIGHT SIDE	19.5	2.2	0.49	1	1
NB R36.57 RIGHT SIDE	19.5	2.2	0.49	1	1
NB R36.74 RIGHT SIDE	19.5	2.2	0.49	1	1
NB 37.63 RIGHT SIDE	19.5	2.2	0.49	1	1
NB 38.04 RIGHT SIDE	19.5	2.2	0.49	1	1
NB 38.21 RIGHT SIDE	19.5	2.2	0.49	1	1
NB 38.32 RIGHT SIDE	19.5	2.2	0.49	1	1
NB 38.52 RIGHT SIDE	19.5	2.2	0.49	1	1
NB 38.56 RIGHT SIDE	19.5	2.2	0.49	1	1
NB 38.97 RIGHT SIDE	19.5	2.2	0.49	1	1
NB 39.36 RIGHT SIDE	19.5	2.2	0.49	1	1
NB 42.52 RIGHT SIDE	19.5	2.2	0.49	1	1
SUBTOTAL	253.5	28.6	6.37	13	13
TOTAL				26	26

* QUANTITY INCLUDED IN ROADWAY QUANTITIES TABLE, SEE SHEET Q-6

MIDWEST GUARDRAIL SYSTEM AND END TREATMENTS

POST MILE	DIRECTION	REMOVE GUARDRAIL	MIDWEST GUARDRAIL SYSTEM (8' POST)	ALTERNATIVE FLARED TERMINAL SYSTEM	(N) BURIED POST END ANCHOR	TREATED WOOD WASTE	GUARD RAILING DELINEATOR	REMARKS
		LF	LF	EA	EA	LB	EA	
R36.54 TO R36.62	SB	425				1,956		DO NOT REMOVE EXISTING DIKE
R36.54 TO R36.84	SB		1,585	1	1		12	REFER TO RSP A77N3 FOR MGS NARROW ROADWAY INSTALLATION
TOTAL		425	1,585	1		1,956	12	

(N) - NOT A SEPARATE PAY ITEM, FOR INFORMATION ONLY

VEGETATION CONTROL (MINOR CONCRETE)

POST MILE	DIRECTION	SIDE	SQYD
R36.54 TO R36.84	SB	R†	590
TOTAL			590

SUMMARY OF QUANTITIES
Q-5

CALCULATED-DESIGNED BY: RAHIM IBRAHIMI
CHECKED BY: KIAN K. HEMMATI
REVISED BY
DATE REVISED
FUNCTIONAL SUPERVISOR: RON KRAEMER
STATE OF CALIFORNIA - DEPARTMENT OF TRANSPORTATION
DESIGN
Caltrans

LAST REVISION DATE PLOTTED => 12-JUN-2015
06-08-15 TIME PLOTTED => 10:55

BORDER LAST REVISED 7/2/2010
USERNAME => s109144
DGN FILE => 0512000106pa005.dgn
RELATIVE BORDER SCALE IS IN INCHES 0 1 2 3
UNIT 1451
PROJECT NUMBER & PHASE 05120001061

Dist	COUNTY	ROUTE	POST MILES TOTAL PROJECT	SHEET No.	TOTAL SHEETS
05	SLO	1	17.7/59.0	22	48

6-8-15
REGISTERED CIVIL ENGINEER DATE

KIAN K. HEMMATI
No. C81130
Exp.9-30-15
CIVIL
REGISTERED PROFESSIONAL ENGINEER
STATE OF CALIFORNIA

6-8-15
PLANS APPROVAL DATE

THE STATE OF CALIFORNIA OR ITS OFFICERS OR AGENTS SHALL NOT BE RESPONSIBLE FOR THE ACCURACY OR COMPLETENESS OF SCANNED COPIES OF THIS PLAN SHEET.

ROADWAY QUANTITIES

POST MILE	DIRECTION	SHOULDER BACKING TON	COLD PLANE ASPHALT CONCRETE PAVEMENT SQYD	TACK COAT TON	HOT MIX ASPHALT (TYPE A) TON	ROADWAY EXCAVATION CY	REMOVE ASPHALT CONCRETE PAVEMENT (SQFT) SQFT	PLACE HOT MIX ASPHALT (Misc AREA) SQYD	REMARKS
17.70 TO 17.96	NB	0	1220	0.15	164.74	0.0			
22.29 TO 22.32	NB	9	141	0.03	54.65	17.6			FAILED SHOULDER WIDTH = 6′
22.48 TO 22.62	NB	40	657	0.08	88.7	0.0			
23.01 TO 23.34	NB	89	1525	0.33	592.02	190.7			FAILED SHOULDER WIDTH = 6′
35.46 TO 35.47	NB	2	38	0.01	14.57	4.7			FAILED SHOULDER WIDTH = 6′
36.56 TO 36.76	NB	57	939	0.21	364.32	117.3			FAILED SHOULDER WIDTH = 6′
37.45 TO 37.64	NB	54	993	0.21	357.35	110.3			FAILED SHOULDER WIDTH = 6′
38.04 TO 38.32	NB	80	1305	0.29	506.40	163.1			FAILED SHOULDER WIDTH = 6′
38.51 TO 38.57	NB	17	294	0.06	109.81	34.6			FAILED SHOULDER WIDTH = 6′
38.90 TO 38.97	NB	21	391	0.05	52.75	0.0			
39.30 TO 39.37	NB	19	310	0.07	120.23	38.7			FAILED SHOULDER WIDTH = 6′
42.49 TO 42.52	NB	11	229	0.05	77.22	22.9			FAILED SHOULDER WIDTH = 6′
43.47 TO 43.64	NB	0	840	0.18	326.07	105.0			FAILED SHOULDER WIDTH = 6′
19.06 TO 19.18	SB	0	639	0.08	86.25	0.0			
22.30 TO 22.34	SB	10	180	0.02	24.24	0.0			
29.28 TO 29.36	SB	24	394	0.05	53.22	0.0			
R34.85 TO R34.86	SB	3	52	0.01	20.04	6.5			FAILED SHOULDER WIDTH = 6′
R35.17 TO R35.19	SB	7	113	0.01	15.21	0.0			
R35.89 TO R35.90	SB	3	47	0.01	6.34	0.0			
R36.54 TO R36.62	SB	0	371	0.05	50.05	0.0			
37.45 TO 37.57	SB	35	639	0.13	230.00	71.0			FAILED SHOULDER WIDTH = 6′
39.72 TO 39.75	SB	9	146	0.03	56.47	18.2			FAILED SHOULDER WIDTH = 6′
43.09 TO 43.23	SB	0	657	0.08	88.70	0.0			
43.92 TO 43.95	SB	8	131	0.02	17.74	0.0			
22.29 TO 43.95	NB/SB				243.17				DIKE, SEE SHEET Q-4
22.29 TO 38.27	NB/SB				5.85		234.0	26.0	DOWNDRAIN, SEE SHEET Q-5
23.06 TO 42.52	NB/SB				6.37		253.5	28.6	OVERSIDE DRAINS, SEE SHEET Q-5
TOTAL		498	12,251	2.21	3,732.48	900.6	487.5	54.6	

SUMMARY OF QUANTITIES
Q-6

CALCULATED-DESIGNED BY: RAHIM IBRAHIMI
CHECKED BY: KIAN K. HEMMATI
REVISED BY
DATE REVISED
FUNCTIONAL SUPERVISOR: RON KRAEMER
STATE OF CALIFORNIA - DEPARTMENT OF TRANSPORTATION
Caltrans®
DESIGN

LAST REVISION | DATE PLOTTED => 12-JUN-2015
06-08-15 | TIME PLOTTED => 10:55

BORDER LAST REVISED 7/2/2010
USERNAME => s109144
DGN FILE => 0512000106pa006.dgn
RELATIVE BORDER SCALE IS IN INCHES 0 1 2 3
UNIT 1451
PROJECT NUMBER & PHASE 05120001061

Dist	COUNTY	ROUTE	POST MILES TOTAL PROJECT	SHEET No.	TOTAL SHEETS
05	SLO	1	17.7/59.0	23	48

LICENSED LANDSCAPE ARCHITECT

6-8-15
PLANS APPROVAL DATE

LICENSED LANDSCAPE ARCHITECT
Laurie D. Dunn No. 3506
Signature
4-30-16
Renewal Date
6-8-15
Date
STATE OF CALIFORNIA

THE STATE OF CALIFORNIA OR ITS OFFICERS OR AGENTS SHALL NOT BE RESPONSIBLE FOR THE ACCURACY OR COMPLETENESS OF SCANNED COPIES OF THIS PLAN SHEET.

EROSION CONTROL

SEQUENCE	ITEM	MATERIAL		APPLICATION RATE
		DESCRIPTION	TYPE	
STEP 1	HYDROSEED	SEED	MIX	48 LB/ACRE
		FIBER	WOOD	1500 LB/ACRE
		TACKIFIER	PSYLLIUM	125 LB/ACRE

SEED MIX

BOTANICAL NAME (COMMON NAME)	PERCENT GERMINATION (MINIMUM)	POUNDS PURE LIVE SEED PER ACRE (SLOPE MEASUREMENT)
ERIOGONUM PARVIFOLIUM (COASTAL BUCKWHEAT)	40	5
ESCHSCHOLZIA CALIFORNICA (CALIFORNIA POPPY)	80	7
LUPINUS NANUS (SKY LUPINE)	75	12
VULPIA MICROSTACHYS (SMALL FESCUE)	80	24

EROSION CONTROL QUANTITIES

SHEET	LOCATION			DESCRIPTION	HYDROSEED	REMARKS
	POST MILES	SB	NB		SQFT	
NOT SHOWN ON PLANS*	PM 22.28 TO PM 43.95	X	X	EROSION CONTROL	33,000	*APPLY TO ALL DISTURBED SOIL AREAS INCLUDING AREAS AT DIKE, DOWNDRAINS, OVERSIDE DRAINS, MIDWEST GUARDRAIL, AND VEGETATION CONTROL.
TOTAL					33,000	

EROSION CONTROL QUANTITIES
ECQ-1

STATE OF CALIFORNIA - DEPARTMENT OF TRANSPORTATION
Caltrans® LANDSCAPE ARCHITECTURE

SENIOR LANDSCAPE ARCHITECT: DENNIS REEVES
CALCULATED-DESIGNED BY: LAURIE D. DUNN (CUMMINGS)
CHECKED BY: SCOTT DOWLAN
REVISED BY
DATE REVISED

LAST REVISION 02-18-15
DATE PLOTTED => 12-JUN-2015
TIME PLOTTED => 10:55

Dist	COUNTY	ROUTE	POST MILES TOTAL PROJECT	SHEET No.	TOTAL SHEETS
05	SLO	1	17.7/59.0	24	48

Xavier Alfaro 6-10-15
REGISTERED CIVIL ENGINEER DATE

06-08-15
PLANS APPROVAL DATE

REGISTERED PROFESSIONAL ENGINEER XAVIER I. ALFARO No. E17488 Exp. 6-30-17 ELECTRICAL STATE OF CALIFORNIA

THE STATE OF CALIFORNIA OR ITS OFFICERS OR AGENTS SHALL NOT BE RESPONSIBLE FOR THE ACCURACY OR COMPLETENESS OF SCANNED COPIES OF THIS PLAN SHEET.

NOTE:

EXACT PLACEMENT OF LOOP DETECTORS MUST BE DETERMINED BY THE ENGINEER.

LEGEND:

[1] RAMP CENSUS LOOP DETECTORS, SEE SHEET E-2 DETAIL C.

[2] HIGHWAY CENSUS LOOP DETECTORS, SEE SHEET E-2 DETAIL B.

[3] HIGHWAY CENSUS LOOP DETECTORS, SEE SHEET E-2 DETAIL D.

[4] [AB] Exist TRAFFIC Sig LOOP DETECTORS.
FURNISH AND INSTALL TRAFFIC Sig LOOP DETECTOR SEE SHEET E-2 DETAIL A.

RAMP CENSUS LOOP DETECTORS

PM	DIRECTION OF TRAVEL	LOCATION DESCRIPTION	No. OF LOOP DETECTORS [1]	No. OF PB's
27.75	SB	S BAY Blvd ON-RAMP	1	1
27.76	NB	S BAY Blvd OFF-RAMP	1	1
28.03	SB	S BAY Blvd OFF-RAMP	1	1
28.04	NB	S BAY Blvd ON-RAMP	1	1
28.62	NB	S MORRO BAY NB OFF-RAMP	1	1
28.74	NB	S MORRO BAY NB ON-RAMP	1	1
28.75	SB	S MORRO BAY SB ON-RAMP	1	1
28.95	SB	S MORRO BAY SB OFF-RAMP	1	1
29.46	SB	N MORRO BAY SB ON-RAMP	1	1
29.72	NB	N MORRO BAY NB OFF-RAMP	1	1
29.75	SB	N MORRO BAY SB OFF-RAMP	1	1
29.84	NB	N MORRO BAY NB ON-RAMP	1	1
29.96	NB	Rte 1/41 Sep NB-OFF-RAMP	1	1
29.97	SB	Rte 1/41 Sep NB-ON-RAMP	1	1
30.26	NB	Rte 1/41 Sep NB-ON-RAMP	1	1
30.27	SB	Rte 1/41 Sep NB-OFF-RAMP	1	1
35.84	NB	CAYUCOS Dr NB OFF-RAMP	1	1
35.85	SB	CAYUCOS Dr NB ON-RAMP	1	1
36.10	NB	CAYUCOS Dr NB ON-RAMP	1	1
36.11	SB	CAYUCOS Dr NB OFF-RAMP	1	1
		TOTAL	20	20

HIGHWAY CENSUS LOOP DETECTORS

PM	DIRECTION OF TRAVEL	LOCATION DESCRIPTION	No. OF LOOP DETECTORS	No. OF PB's
17.71	NB/SB	HIGHLAND Dr	4 [2]	2
17.91	NB/SB	HIGHLAND Dr	4 [2]	2
19.70	NB/SB	COLONY Dr	4 [2]	2
19.87	NB/SB	COLONY Dr	4 [2]	2
21.42	NB/SB	CAMP SAN LUIS OBISPO	4 [2]	2
21.71	NB/SB	CAMP SAN LUIS OBISPO	4 [2]	2
22.39	NB/SB	CUESTA COLLEGE	4 [2]	2
23.56	NB/SB	CUESTA COLLEGE	4 [2]	2
31.24	NB/SB	SAN JACINTO St	4 [2]	2
31.85	NB/SB	YERBA BUENA St	4 [2]	2
32.10	NB/SB	YERBA BUENA St	4 [2]	2
34.56	NB/SB	OLD CREEK Rd/STUDIO Dr	4 [2]	2
36.75	NB/SB	OLD CREEK Rd/STUDIO Dr	4 [2]	2
46.16	NB/SB	ROUTE 46	2 [3]	1
46.90	NB/SB	MONTE CRISTO PLACE	2 [3]	1
48.44	NB/SB	ARDATH Dr/MAIN St	2 [3]	1
		TOTAL	58	29

REPLACE EXISTING TRAFFIC SIGNAL LOOP DETECTORS

PM	DIRECTION OF TRAVEL	LOCATION DESCRIPTION	No. OF LOOP DETECTORS [4]
22.57	NB	EDUCATION Dr MID LOOP DETECTOR	2
22.54	NB	EDUCATION Dr ADV LOOP DETECTOR	2
22.29	SB	HOLLISTER Dr MID LOOP DETECTOR	2
		TOTAL	6

XAVIER ALFARO — CALCULATED-DESIGNED BY
PAUL MATOS — CHECKED BY
XIA — REVISED BY
06-10-15 — DATE REVISED
ALI BAKHDOUD — FUNCTIONAL SUPERVISOR

STATE OF CALIFORNIA - DEPARTMENT OF TRANSPORTATION
ELECTRICAL DESIGN

APPROVED FOR ELECTRICAL WORK ONLY

INDUCTIVE LOOP DETECTORS
E-1

LAST REVISION 06-10-15
DATE PLOTTED => 24-JUN-2015
TIME PLOTTED => 08:38

BORDER LAST REVISED 7/2/2010
USERNAME => s109144
DGN FILE => 0512000106ua001.dgn
RELATIVE BORDER SCALE IS IN INCHES 0 1 2 3
UNIT 1515
PROJECT NUMBER & PHASE 05120001061

Dist	COUNTY	ROUTE	POST MILES TOTAL PROJECT	SHEET No.	TOTAL SHEETS
05	SLO	1	17.7/59.0	25	48

Xavier Alfaro 06-10-15
REGISTERED CIVIL ENGINEER DATE

06-08-15
PLANS APPROVAL DATE

REGISTERED PROFESSIONAL ENGINEER
XAVIER I. ALFARO
No. E17488
Exp. 6-30-17
ELECTRICAL
STATE OF CALIFORNIA

THE STATE OF CALIFORNIA OR ITS OFFICERS OR AGENTS SHALL NOT BE RESPONSIBLE FOR THE ACCURACY OR COMPLETENESS OF SCANNED COPIES OF THIS PLAN SHEET.

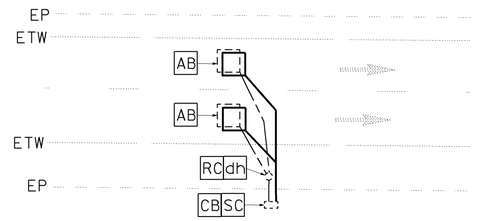

TYPICAL TRAFFIC Sig
LOOP DETECTOR INSTALLATION

DETAIL A

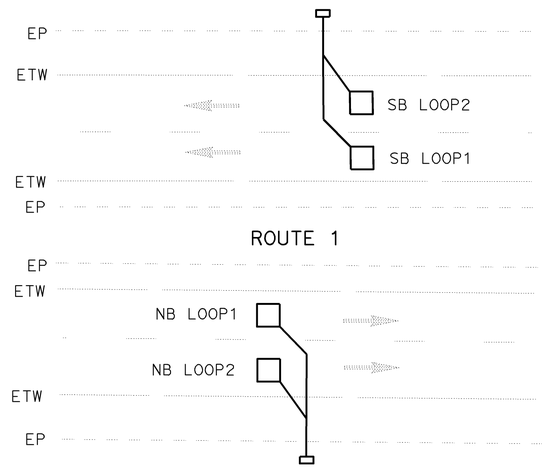

TYPICAL HIGHWAY CENSUS
LOOP DETECTOR INSTALLATION

DETAIL B

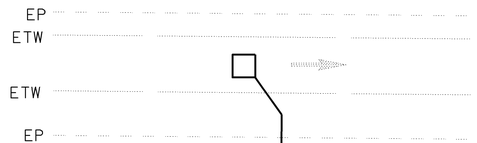

TYPICAL RAMP CENSUS
LOOP DETECTOR INSTALLATION

DETAIL C

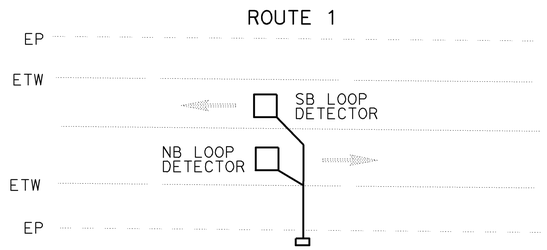

TYPICAL HIGHWAY CENSUS
LOOP DETECTOR INSTALLATION

DETAIL D

APPROVED FOR ELECTRICAL WORK ONLY

ELECTRICAL DETAILS

NO SCALE

E-2

CALCULATED-DESIGNED BY	REVISED BY	FUNCTIONAL SUPERVISOR
CHECKED BY	DATE REVISED	
XAVIER ALFARO	XIA	ALI BAKHDOUD
PAUL MATOS	06-10-15	

STATE OF CALIFORNIA - DEPARTMENT OF TRANSPORTATION
Caltrans® **ELECTRICAL DESIGN**

LAST REVISION 06-10-15 | DATE PLOTTED => 24-JUN-2015 | TIME PLOTTED => 08:38

BORDER LAST REVISED 7/2/2010 | USERNAME => s109144 | DGN FILE => 0512000106ua002.dgn | RELATIVE BORDER SCALE IS IN INCHES 0 1 2 3 | UNIT 1515 | PROJECT NUMBER & PHASE 05120001061

Dist	COUNTY	ROUTE	POST MILES TOTAL PROJECT	SHEET No.	TOTAL SHEETS
05	SLO	1	17.7/59.0	26	48

Xavier Alfaro 06-10-15
REGISTERED CIVIL ENGINEER DATE

06-08-15
PLANS APPROVAL DATE

REGISTERED PROFESSIONAL ENGINEER XAVIER I. ALFARO No. E17488 Exp. 6-30-17 ELECTRICAL STATE OF CALIFORNIA

THE STATE OF CALIFORNIA OR ITS OFFICERS OR AGENTS SHALL NOT BE RESPONSIBLE FOR THE ACCURACY OR COMPLETENESS OF SCANNED COPIES OF THIS PLAN SHEET.

MAINTAINING EXISTING TRAFFIC MANAGEMENT SYSTEM ELEMENTS DURING CONSTRUCTION

PM	DIRECTION OF TRAVEL	LOCATION DESCRIPTION	ITEM DESCRIPTION
17.18	NB/SB	HIGHLAND Dr	TRAFFIC SIGNAL
19.80	NB/SB	CALIFORNIA MENS COLONY	TRAFFIC SIGNAL
20.89	NB/SB	KANSAS Ave	TRAFFIC SIGNAL
22.21	NB/SB	HOLLISTER Rd	TRAFFIC SIGNAL
22.65	NB/SB	EDUCATION Dr	TRAFFIC SIGNAL
28.10	NB/SB	NORTH OF BAYWOOD PARK Rd	TMS/CENSUS INDUCTIVE LOOP DETECORS
30.35	NB/SB	NORTH OF Rte 41 NORTHEAST Jct	TMS/CENSUS INDUCTIVE LOOP DETECORS
31.13	NB/SB	SAN JACINTO/INDIGO St	TRAFFIC SIGNAL
32.00	NB/SB	YERBA BUAENA St	TRAFFIC SIGNAL
33.86	NB/SB	OLD CREEK Rd/STUDIO Dr	TRAFFIC SIGNAL
45.59	NB	SOUTH OF Rte 46	TMS/CENSUS INDUCTIVE LOOP DETECORS
45.72	NB	SOUTH OF Rte 46	CMS/CCTV SYSTEM
48.26	NB/SB	ARDATH Dr/MAIN St	TRAFFIC SIGNAL
48.37	NB	NORTH OF ARDATH Rd	TMS/CENSUS INDUCTIVE LOOP DETECORS
48.98	NB/SB	BURTON Dr	TRAFFIC SIGNAL
50.13	NB/SB	CAMBRIA Rd	TRAFFIC SIGNAL
50.67	NB/SB	WINDSOR Blvd	TRAFFIC SIGNAL

INDUCTIVE LOOP DETECTORS

SHEET No.	No. 5 PB	TYPE A LOOP DETECTOR	1"C TYPE 3
	EA		FT
E-1	49	84	500

THE QUANTITIES ON THIS TABLE ARE NOT A SEPARATE PAY ITEM, FOR INFORMATION ONLY. FOR COMPLETE ELECTRICAL WORK, SEE ELECTRICAL SHEETS.

APPROVED FOR ELECTRICAL WORK ONLY

ELECTRICAL QUANTITIES
E-3

STATE OF CALIFORNIA - DEPARTMENT OF TRANSPORTATION
Caltrans® ELECTRICAL DESIGN

FUNCTIONAL SUPERVISOR: ALI BAKHDOUD
CALCULATED-DESIGNED BY: XAVIER ALFARO
CHECKED BY: PAUL MATOS
REVISED BY: XIA
DATE REVISED: 06-10-15

LAST REVISION 06-10-15
DATE PLOTTED => 24-JUN-2015
TIME PLOTTED => 08:38

M

Maint	MAINTENANCE
Max	MAXIMUM
MB	METAL BEAM
MBB	METAL BEAM BARRIER
MBGR	METAL BEAM GUARD RAILING
Med	MEDIAN
MGS	MIDWEST GUARDRAIL SYSTEM
MH	MANHOLE
Min	MINIMUM
Misc	MISCELLANEOUS
Misc I & S	MISCELLANEOUS IRON AND STEEL
Mkr	MARKER
Mod	MODIFIED, MODIFY
Mon	MONUMENT
MP	METAL PLATE
MPGR	METAL PLATE GUARD RAILING
MR	MOVEMENT RATING
MSE	MECHANICALLY STABILIZED EMBANKMENT
Mt	MOUNTAIN, MOUNT
Mtl	MATERIAL
MVP	MAINTENANCE VEHICLE PULLOUT

N

N	NORTH
NB	NORTHBOUND
No.	NUMBER (MUST HAVE PERIOD)
Nos.	NUMBERS (MUST HAVE PERIOD)
NPS	NOMINAL PIPE SIZE
NS	NEAR SIDE
NSP	NEW STANDARD PLAN
NTS	NOT TO SCALE

O

Oblr	OBLITERATE
OC	OVERCROSSING
OD	OUTSIDE DIAMETER
OF	OUTSIDE FACE
OG	ORIGINAL GROUND
OGAC	OPEN GRADED ASPHALT CONCRETE
OGFC	OPEN GRADED FRICTION COURSE
OH	OVERHEAD
OHWM	ORDINARY HIGH WATER MARK
O-O	OUT TO OUT
Opp	OPPOSITE
OSD	OVERSIDE DRAIN

P

P	PAGE
PAP	PERFORATED ALUMINUM PIPE
PB	PULL BOX
PC	POINT OF CURVATURE, PRECAST
PCC	POINT OF COMPOUND CURVE, PORTLAND CEMENT CONCRETE
PCMS	PORTABLE CHANGEABLE MESSAGE SIGN
PCP	PERFORATED CONCRETE PIPE, PRESTRESSED CONCRETE PIPE
PCVC	POINT OF COMPOUND VERTICAL CURVE
PEC	PERMIT TO ENTER AND CONSTRUCT
Ped	PEDESTRIAN
Ped OC	PEDESTRIAN OVERCROSSING
Ped UC	PEDESTRIAN UNDERCROSSING
Perm Mtl	PERMEABLE MATERIAL

P continued

PG	PROFILE GRADE
PI	POINT OF INTERSECTION
PJP	PARTIAL JOINT PENETRATION
Pkwy	PARKWAY
℄,PL	PLATE
P/L	PROPERTY LINE
PM	POST MILE, TIME FROM NOON TO MIDNIGHT
PN	PAVING NOTCH
POC	POINT OF HORIZONTAL CURVE
POT	POINT OF TANGENT
POVC	POINT OF VERTICAL CURVE
PP	PIPE PILE, PLASTIC PIPE, POWER POLE
PPL	PREFORMED PERMEABLE LINER
PPP	PERFORATED PLASTIC PIPE
PRC	POINT OF REVERSE CURVE
PRF	PAVEMENT REINFORCING FABRIC
PRVC	POINT OF REVERSE VERTICAL CURVE
PS&E	PLANS, SPECIFICATIONS AND ESTIMATES
PS, P/S	PRESTRESSED
PSP	PERFORATED STEEL PIPE
PT	POINT OF TANGENCY
PVC	POLYVINYL CHLORIDE
Pvmt	PAVEMENT

Q

Qty	QUANTITY

R

R	RADIUS
R & D	REMOVE AND DISPOSE
R & S	REMOVE AND SALVAGE
R/C	RATE OF CHANGE
RCA	REINFORCED CONCRETE ARCH
RCB	REINFORCED CONCRETE BOX
RCP	REINFORCED CONCRETE PIPE
RCPA	REINFORCED CONCRETE PIPE ARCH
Rd	ROAD
Reinf	REINFORCED, REINFORCEMENT, REINFORCING
Rel	RELOCATE
Repl	REPLACEMENT
Ret	RETAINING
Rev	REVISED, REVISION
Rdwy	ROADWAY
RHMA	RUBBERIZED HOT MIX ASPHALT
Riv	RIVER
RM	ROAD-MIXED
RP	RADIUS POINT, REFERENCE POINT
RR	RAILROAD
RSP	ROCK SLOPE PROTECTION, REVISED STANDARD PLAN
Rt	RIGHT
Rte	ROUTE
RW	REDWOOD, RETAINING WALL
R/W	RIGHT OF WAY
Rwy	RAILWAY

S

S	SOUTH, SUPPLEMENT
SAE	STRUCTURE APPROACH EMBANKMENT
Salv	SALVAGE
SAPP	STRUCTURAL ALUMINUM PLATE PIPE
SB	SOUTHBOUND
SC	SAND CUSHION
SCSP	SLOTTED CORRUGATED STEEL PIPE
SD	STORM DRAIN
Sec	SECOND, SECTION
Sep	SEPARATION
SG	SUBGRADE
Shld	SHOULDER
Sht	SHEET
Sim	SIMILAR
℄	STATION LINE
SM	SELECTED MATERIAL
Spec	SPECIAL, SPECIFICATIONS
SPP	SLOTTED PLASTIC PIPE
SS	SLOPE STAKE
SSBM	STRAP AND SADDLE BRACKET METHOD
SSD	STRUCTURAL SECTION DRAIN
SSPA	STRUCTURAL STEEL PLATE ARCH
SSPP	STRUCTURAL STEEL PLATE PIPE
SSPPA	STRUCTURAL STEEL PLATE PIPE ARCH
SSRP	STEEL SPIRAL RIB PIPE
St	STREET
Sta	STATION
STBB	SINGLE THRIE BEAM BARRIER
Std	STANDARD
Str	STRUCTURE
Surf	SURFACING
SW	SIDEWALK, SOUND WALL
Swr	SEWER
Sym	SYMMETRICAL
S4S	SURFACE 4 SIDES

T

T	SEMI-TANGENT
Tan	TANGENT
TBB	THRIE BEAM BARRIER
Tbr	TIMBER
TC	TOP OF CURB
TCB	TRAFFIC CONTROL BOX
TCE	TEMPORARY CONSTRUCTION EASEMENT
Tel	TELEPHONE
Temp	TEMPORARY
TG	TOP OF GRADE
Tot	TOTAL
TP	TELEPHONE POLE
TPB	TREATED PERMEABLE BASE
TPM	TREATED PERMEABLE MATERIAL
Trans	TRANSITION

T continued

TS	TRANSVERSE, TRAFFIC SIGNAL, TUBULAR STEEL
Typ	TYPICAL

U

UC	UNDERCROSSING
UD	UNDERDRAIN
UG	UNDERGROUND
UON	UNLESS OTHERWISE NOTED
UP	UNDERPASS

V

V	VALVE, DESIGN SPEED
Var	VARIABLE, VARIES
VC	VERTICAL CURVE
VCP	VITRIFIED CLAY PIPE
Vert	VERTICAL
Via	VIADUCT
Vol	VOLUME

W

W	WEST, WIDTH
WB	WESTBOUND
WH	WEEP HOLE
WM	WIRE MESH
WS	WATER SURFACE
WSP	WELDED STEEL PIPE
Wt	WEIGHT
WV	WATER VALVE
WW	WINGWALL
WWLOL	WINGWALL LAYOUT LINE

X

X Sec	CROSS SECTION
Xing	CROSSING

Y

Yr	YEAR
Yrs	YEARS

Dist	COUNTY	ROUTE	POST MILES TOTAL PROJECT	SHEET No.	TOTAL SHEETS
05	SLO	1	17.7/59.0	27	48

Grace M. Tsushima
REGISTERED CIVIL ENGINEER

July 19, 2013
PLANS APPROVAL DATE

REGISTERED PROFESSIONAL ENGINEER — Grace M. Tsushima No. C49814 Exp. 9-30-14 CIVIL — STATE OF CALIFORNIA

THE STATE OF CALIFORNIA OR ITS OFFICERS OR AGENTS SHALL NOT BE RESPONSIBLE FOR THE ACCURACY OR COMPLETENESS OF SCANNED COPIES OF THIS PLAN SHEET.

TO ACCOMPANY PLANS DATED 6-8-15

UNIT OF MEASUREMENT SYMBOLS:

Some of the symbols used in the project plan quantity tables and in the Bid Item List are:

TABLE A

SYMBOL USED	DEFINITIONS
ACRE	ACRE
CF	CUBIC FOOT
CY	CUBIC YARD
EA	EACH
GAL	GALLON
LB	POUND
LF	LINEAR FOOT
SQFT	SQUARE FOOT
SQYD	SQUARE YARD
STA	100 FEET
TAB	TABLET
TON	2,000 POUNDS

Some of the symbols used in the plans other than in the project plan quantity tables are:

TABLE B

SYMBOL USED	DEFINITIONS
ksi	KIPS PER SQUARE INCH
ksf	KIPS PER SQUARE FOOT
psi	POUNDS PER SQUARE INCH
psf	POUNDS PER SQUARE FOOT
lb/ft^3, pcf	POUNDS PER CUBIC FOOT
tsf	TONS PER SQUARE FOOT
mph, MPH *	MILES PER HOUR
ø	NOMINAL DIAMETER
oz	OUNCE
lb	POUND
kip	1,000 POUNDS
cal	CALORIE
ft	FOOT OR FEET
gal	GALLON

* For use on a sign panel only

STATE OF CALIFORNIA
DEPARTMENT OF TRANSPORTATION

ABBREVIATIONS (SHEET 2 OF 2)

NO SCALE

RSP A10B DATED JULY 19, 2013 SUPERSEDES STANDARD PLAN A10B DATED MAY 20, 2011 - PAGE 2 OF THE STANDARD PLANS BOOK DATED 2010.

REVISED STANDARD PLAN RSP A10B

2010 REVISED STANDARD PLAN RSP A10B

6-7-13

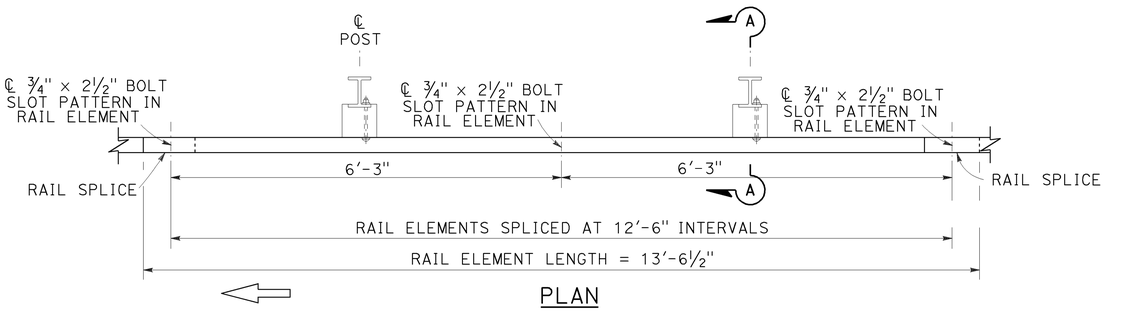

PLAN

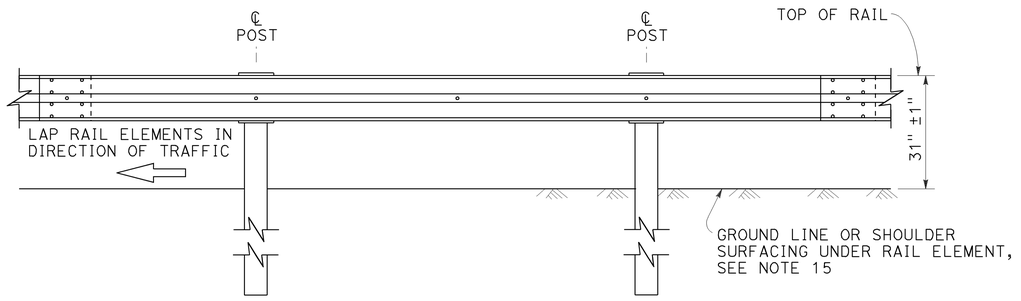

ELEVATION

MIDWEST GUARDRAIL SYSTEM WITH STEEL POSTS AND NOTCHED WOOD OR NOTCHED RECYCLED PLASTIC BLOCKS

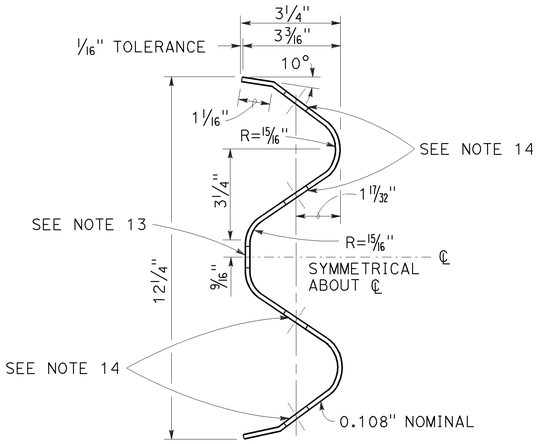

SECTION THRU RAIL ELEMENT

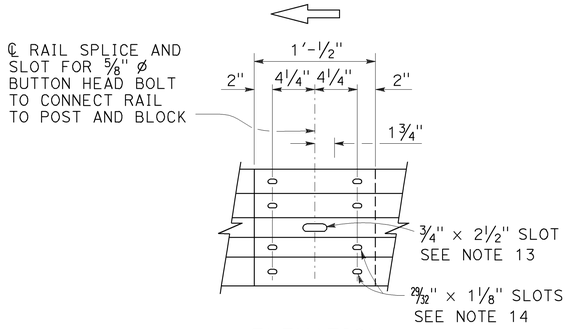

ELEVATION

RAIL ELEMENT SPLICE DETAIL

a) Connect the over lapped end of the rail elements with ⅝" ø × 1⅜" button head oval shoulder splice bolts inserted into the 29/32" × 1⅛" slots and bolted together with ⅝" ø recessed hex nuts. Recess of hex nut points toward rail element. A total of 8 bolts and nuts are to be used at each rail splice connection.

b) The ends of the rail elements are to be overlapped in the direction of traffic (see details).

c) Where end cap is to be attached to the end of a rail element, a total of 4 of the above described splice bolts and nuts are to be used.

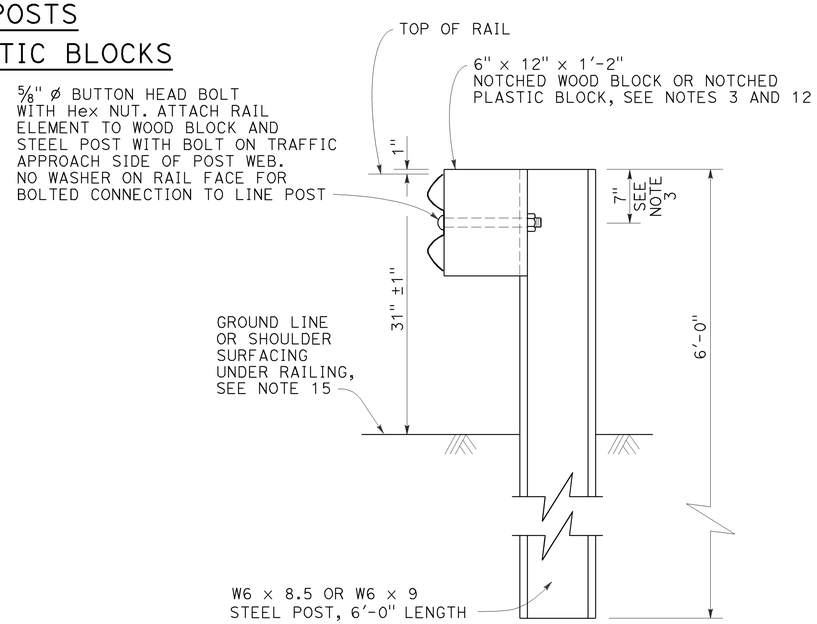

SECTION A-A

TYPICAL STEEL LINE POST INSTALLATION

See Note 4

Dist	COUNTY	ROUTE	POST MILES TOTAL PROJECT	SHEET No.	TOTAL SHEETS
05	SLO	1	17.7/59.0	28	48

Randell D. Hiatt
REGISTERED CIVIL ENGINEER

July 19, 2013
PLANS APPROVAL DATE

REGISTERED PROFESSIONAL ENGINEER — Randell D. Hiatt — No. C50200 — Exp. 6-30-15 — CIVIL — STATE OF CALIFORNIA

THE STATE OF CALIFORNIA OR ITS OFFICERS OR AGENTS SHALL NOT BE RESPONSIBLE FOR THE ACCURACY OR COMPLETENESS OF SCANNED COPIES OF THIS PLAN SHEET.

TO ACCOMPANY PLANS DATED 6-8-15

NOTES:

1. For details of wood post installations, see Revised Standard Plan RSP A77L1.
2. For details of standard hardware used to construct MGS, see Revised Standard Plan RSP A77M1.
3. For details of steel posts and notched wood blocks used to construct MGS, see Revised Standard Plan RSP A77N2.
4. For additional installation details, see Revised Standard Plan RSP A77N3.
5. MGS post spacing to be 6'-3" center to center, except as otherwise noted.
6. For MGS typical layouts, see the A77P, A77Q and A77R Series of Standard Plans.
7. If railing is connected to terminal system end treatment, use 31" height terminal system end treatment.
8. For MGS end anchor details, see Revised Standard Plans RSP A77S1 and RSP A77T2.
9. For details of MGS transition to bridge railing, see Revised Standard Plan RSP A77U4.
10. For additional details of MGS connection to bridge railings, see Revised Standard Plans RSP A77U1, RSP A77U2 and RSP A77V1.
11. For dike positioning and MGS delineation details, see Revised Standard Plan RSP A77N4.
12. Notched face of block faces steel post.
13. Slotted hole for bolted connection of rail element to block and post. See "Section Thru Rail Element".
14. Slotted holes for splice bolts to overlap ends of rail element. See "Section Thru Rail Element".
15. Install posts in soil.

STATE OF CALIFORNIA
DEPARTMENT OF TRANSPORTATION

MIDWEST GUARDRAIL SYSTEM STANDARD RAILING SECTION (STEEL POST WITH NOTCHED WOOD OR NOTCHED RECYCLED PLASTIC BLOCK)

NO SCALE

RSP A77L2 DATED JULY 19, 2013 SUPPLEMENTS THE STANDARD PLANS BOOK DATED 2010.

REVISED STANDARD PLAN RSP A77L2

2010 REVISED STANDARD PLAN RSP A77L2

7-3-13

Dist	COUNTY	ROUTE	POST MILES TOTAL PROJECT	SHEET No.	TOTAL SHEETS
05	SLO	1	17.7/59.0	29	48

Randell D. Hiatt
REGISTERED CIVIL ENGINEER

July 19, 2013
PLANS APPROVAL DATE

REGISTERED PROFESSIONAL ENGINEER
Randell D. Hiatt
No. C50200
Exp. 6-30-15
CIVIL
STATE OF CALIFORNIA

THE STATE OF CALIFORNIA OR ITS OFFICERS OR AGENTS SHALL NOT BE RESPONSIBLE FOR THE ACCURACY OR COMPLETENESS OF SCANNED COPIES OF THIS PLAN SHEET.

TO ACCOMPANY PLANS DATED 6-8-15

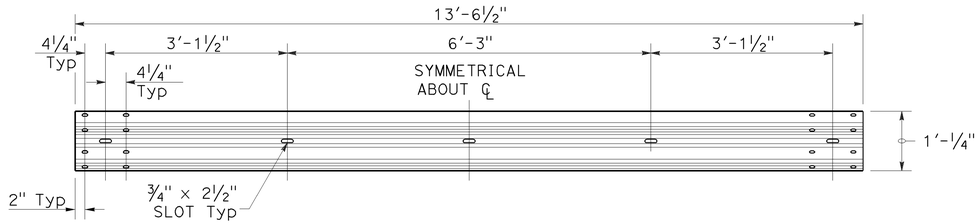

TYPICAL RAIL ELEMENT

NOTE:

1. Slotted holes for splice bolts to overlap ends of rail element.

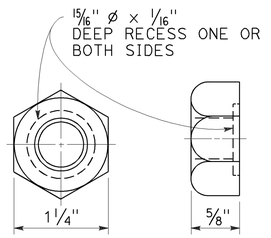

⅝" Ø RECESS NUT

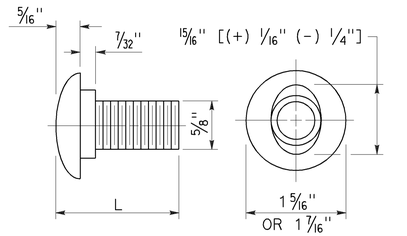

⅝" Ø BUTTON HEAD BOLT

BUTTON HEAD BOLT

L	THREAD LENGTH
1⅜"	FULL THREAD LENGTH
2"	FULL THREAD LENGTH
10"	4" Min THREAD LENGTH
18"	4" Min THREAD LENGTH
20"	4" Min THREAD LENGTH
22"	4" Min THREAD LENGTH
26"	4" Min THREAD LENGTH
36"	4" Min THREAD LENGTH
** 2¾"	2" Min THREAD LENGTH
** 19"	4" Min THREAD LENGTH

** For nested rail applications.

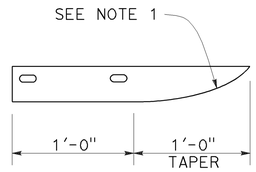

PLAN

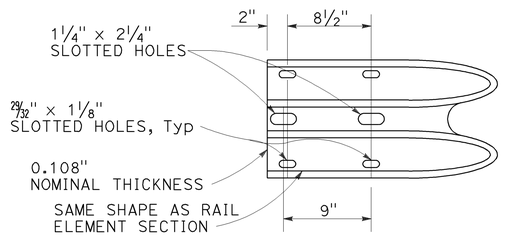

ELEVATION

END CAP (TYPE A)

STATE OF CALIFORNIA
DEPARTMENT OF TRANSPORTATION

MIDWEST GUARDRAIL SYSTEM STANDARD HARDWARE

NO SCALE

RSP A77M1 DATED JULY 19, 2013 SUPPLEMENTS THE STANDARD PLANS BOOK DATED 2010.

REVISED STANDARD PLAN RSP A77M1

2010 REVISED STANDARD PLAN RSP A77M1

7-3-13

Dist	COUNTY	ROUTE	POST MILES TOTAL PROJECT	SHEET No.	TOTAL SHEETS
05	SLO	1	17.7/59.0	30	48

Randell D. Hiatt
REGISTERED CIVIL ENGINEER

November 15, 2013
PLANS APPROVAL DATE

REGISTERED PROFESSIONAL ENGINEER
Randell D. Hiatt
No. C50200
Exp. 6-30-15
CIVIL
STATE OF CALIFORNIA

THE STATE OF CALIFORNIA OR ITS OFFICERS OR AGENTS SHALL NOT BE RESPONSIBLE FOR THE ACCURACY OR COMPLETENESS OF SCANNED COPIES OF THIS PLAN SHEET.

TO ACCOMPANY PLANS DATED 6-8-15

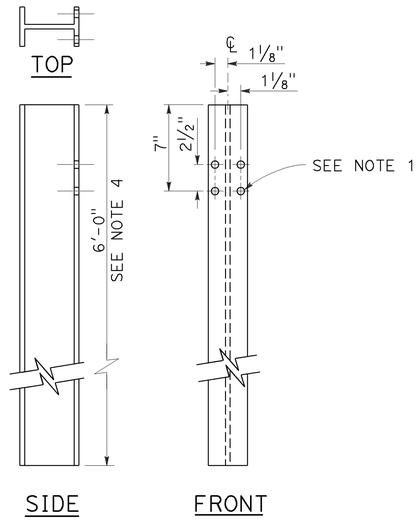

W6 x 9 OR W6 x 8.5
STEEL POST
See Note 4

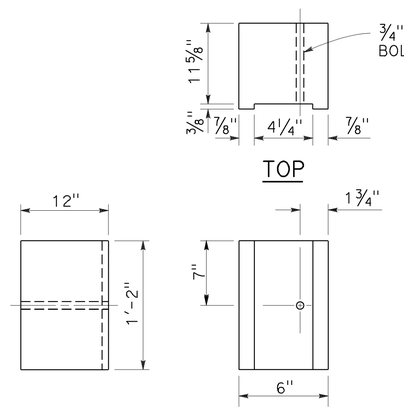

6" x 12"
NOTCHED WOOD BLOCK
See Notes 2 and 3

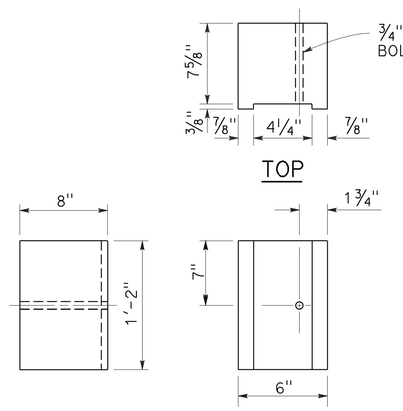

6" x 8"
NOTCHED WOOD BLOCK
Only for use with metal beam guard railing. See Note 5

NOTES:

1. All holes in steel post shall be 13/16" Dia maximum.
2. Dimensions shown for wood block are nominal.
3. Notched face of block faces steel post.
4. 6'-0" length posts to be used for typical roadway installation. See Revised Standard Plan RSP A77N3.
5. See Revised Standard Plan RSP A77L3 for use of 6" x 8" and 8" x 8" notched wood blocks.
6. This post and 8" x 12" block combination to be used for line post sections of MGS on narrow roadways and where strengthened line post sections of MGS are warranted to shield fixed objects.

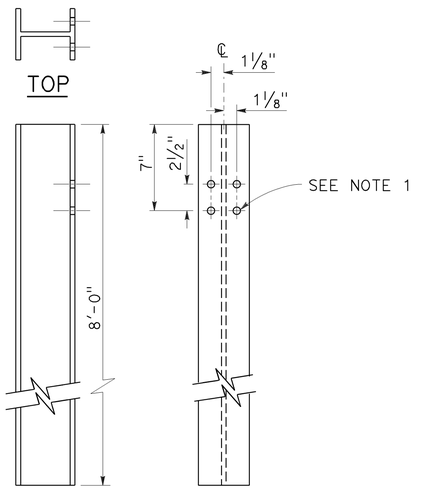

W6 x 15
STEEL POST
See Note 6

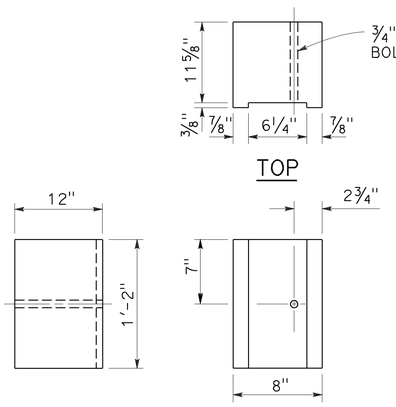

8" x 12"
NOTCHED WOOD BLOCK
See Notes 2 and 3

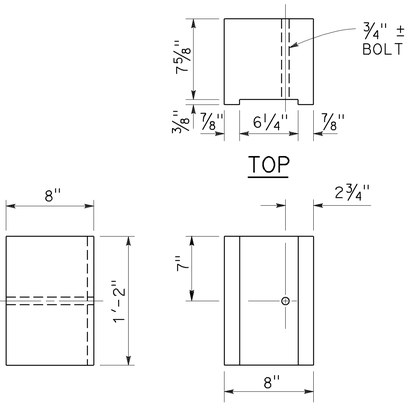

8" x 8"
NOTCHED WOOD BLOCK
Only for use with metal beam guard railing. See Note 5

STATE OF CALIFORNIA
DEPARTMENT OF TRANSPORTATION

MIDWEST GUARDRAIL SYSTEM STEEL POST AND NOTCHED WOOD BLOCK DETAILS

NO SCALE

RSP A77N2 DATED NOVEMBER 15, 2013 SUPERSEDES RSP A77N2
DATED JULY 19, 2013 THAT SUPPLEMENTS THE STANDARD PLANS BOOK DATED 2010.

REVISED STANDARD PLAN RSP A77N2

2010 REVISED STANDARD PLAN RSP A77N2

10-29-13

Dist	COUNTY	ROUTE	POST MILES TOTAL PROJECT	SHEET No.	TOTAL SHEETS
05	SLO	1	17.7/59.0	31	48

Randell D. Hiatt
REGISTERED CIVIL ENGINEER

November 15, 2013
PLANS APPROVAL DATE

REGISTERED PROFESSIONAL ENGINEER
Randell D. Hiatt
No. C50200
Exp. 6-30-15
CIVIL
STATE OF CALIFORNIA

THE STATE OF CALIFORNIA OR ITS OFFICERS OR AGENTS SHALL NOT BE RESPONSIBLE FOR THE ACCURACY OR COMPLETENESS OF SCANNED COPIES OF THIS PLAN SHEET.

TO ACCOMPANY PLANS DATED 6-8-15

2010 REVISED STANDARD PLAN RSP A77N3

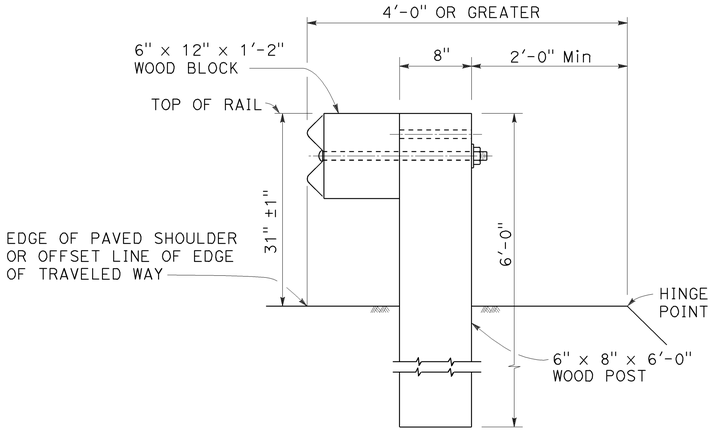

DETAIL A

TYPICAL ROADWAY INSTALLATION

See Note 1

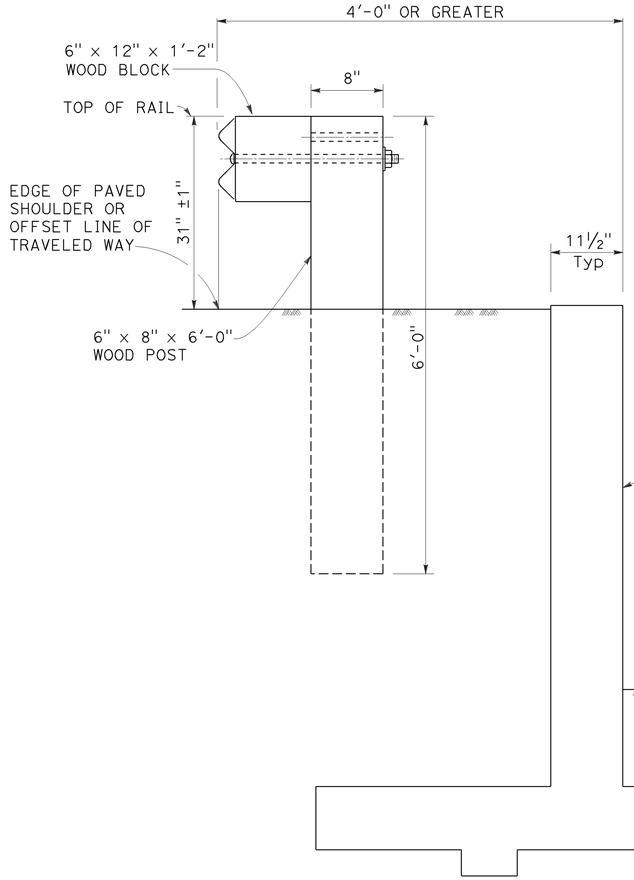

DETAIL C

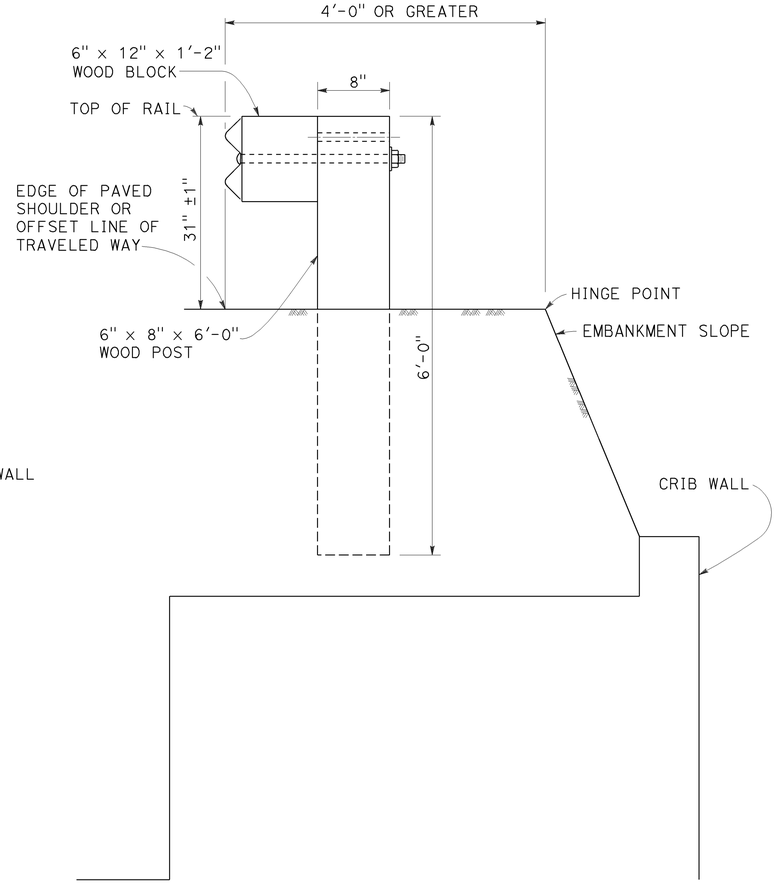

DETAIL D

DETAIL B

NARROW ROADWAY INSTALLATION

See Note 1

POST EMBEDMENT

INSTALLATION AT EARTH RETAINING WALLS

NOTES:

1. These installation details also applicable to steel line post installations. For Detail A, C, and D, where steel line post installations are constructed, W6 x 8.5 or W6 x 9 steel post, 6'-0" in length, with 6" x 12" x 1'-2" notched wood blocks or notched recycled plastic blocks are to be used in place of the size of wood post and wood block shown. For Detail B, where steel line post installations are constructed, W6 x 15 steel post, 8'-0" in length, with 8" x 12" x 1'-2" notched wood blocks or notched recycled plastic blocks are to be used in place of the size of wood post and wood block shown. For additional installation details, see Revised Standard Plan RSP A77L1 and RSP A77L2.
2. Where the distance between the face of the rail and the hinge point is less than 2'-6", see the Project Plans for special details.
3. For dike positioning with MGS installations, see Revised Standard Plan RSP A77N4.

STATE OF CALIFORNIA
DEPARTMENT OF TRANSPORTATION

MIDWEST GUARDRAIL SYSTEM TYPICAL LINE POST EMBEDMENT AND HINGE POINT OFFSET DETAILS

NO SCALE

RSP A77N3 DATED NOVEMBER 15, 2013 SUPERSEDES RSP A77N3 DATED JULY 19, 2013 THAT SUPPLEMENTS THE STANDARD PLANS BOOK DATED 2010.

REVISED STANDARD PLAN RSP A77N3

10-29-13

Dist	COUNTY	ROUTE	POST MILES TOTAL PROJECT	SHEET No.	TOTAL SHEETS
05	SLO	1	17.7/59.0	32	48

Randell D. Hiatt
REGISTERED CIVIL ENGINEER

July 19, 2013
PLANS APPROVAL DATE

REGISTERED PROFESSIONAL ENGINEER
Randell D. Hiatt
No. C50200
Exp. 6-30-15
CIVIL
STATE OF CALIFORNIA

THE STATE OF CALIFORNIA OR ITS OFFICERS OR AGENTS SHALL NOT BE RESPONSIBLE FOR THE ACCURACY OR COMPLETENESS OF SCANNED COPIES OF THIS PLAN SHEET.

TO ACCOMPANY PLANS DATED 6-8-15

NOTES:

1. When necessary to place dike more than 7" in front of face of MGS, only Type C dike may be used. For dike details, see Revised Standard Plan RSP A87B.
2. For standard railing post embedment, see Revised Standard Plan RSP A77N3.
3. MGS delineation to be used where shown on the Project Plans.
4. When dike or curb is placed under MGS, the maximum height of the dike or curb shall be 6". Mountable dike should not be used. For dike and curb details, see Revised Standard Plans RSP A87A and RSP A87B.
5. For details of typical distance between the face of rail and hinge point, see Revised Standard Plan RSP A77N3.
6. For steel line posts, use 1/4 - 20 self-tapping screws in 0.22" diameter holes or 1/4" bolts in 9/32" diameter holes.

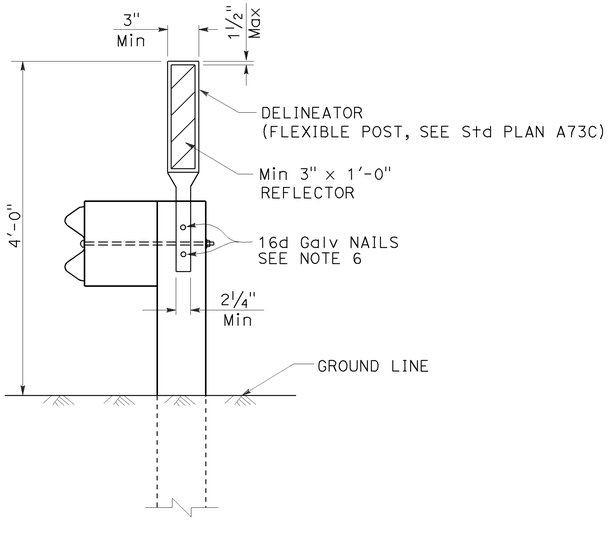

MGS DELINEATION

See Note 3

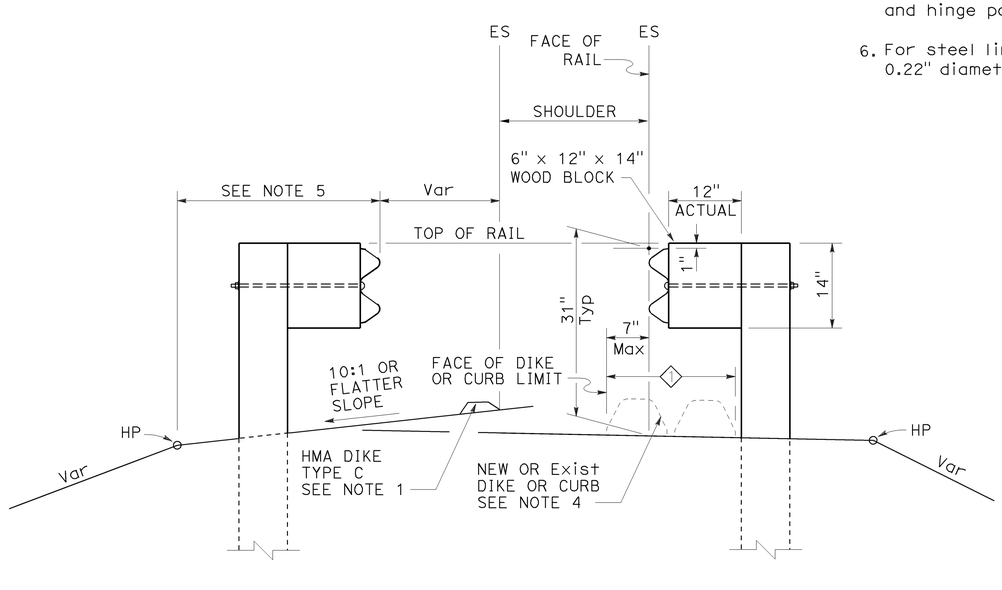

DIKE POSITIONING

See Note 1

◇1 PERMISSIBLE DIKE OR CURB PLACEMENT AREA

STATE OF CALIFORNIA
DEPARTMENT OF TRANSPORTATION

MIDWEST GUARDRAIL SYSTEM TYPICAL RAILING DELINEATION AND DIKE POSITIONING DETAILS

NO SCALE

RSP A77N4 DATED JULY 19, 2013 SUPPLEMENTS THE STANDARD PLANS BOOK DATED 2010.

REVISED STANDARD PLAN RSP A77N4

2010 REVISED STANDARD PLAN RSP A77N4

7-10-13

Dist	COUNTY	ROUTE	POST MILES TOTAL PROJECT	SHEET No.	TOTAL SHEETS
05	SLO	1	17.7/59.0	33	48

Randell D. Hiatt
REGISTERED CIVIL ENGINEER

July 19, 2013
PLANS APPROVAL DATE

REGISTERED PROFESSIONAL ENGINEER
Randell D. Hiatt
No. C50200
Exp. 6-30-15
CIVIL
STATE OF CALIFORNIA

THE STATE OF CALIFORNIA OR ITS OFFICERS OR AGENTS SHALL NOT BE RESPONSIBLE FOR THE ACCURACY OR COMPLETENESS OF SCANNED COPIES OF THIS PLAN SHEET.

TO ACCOMPANY PLANS DATED 6-8-15

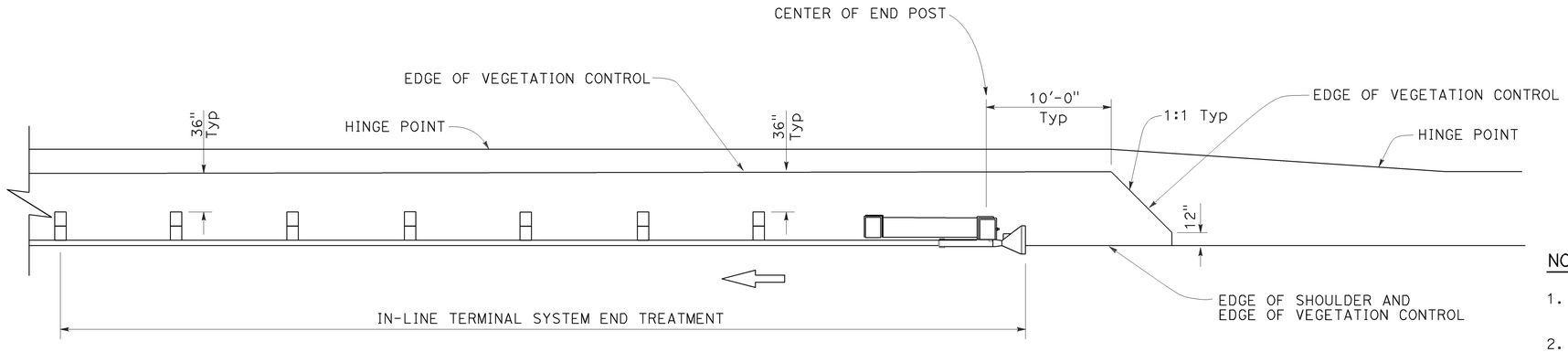

PLAN

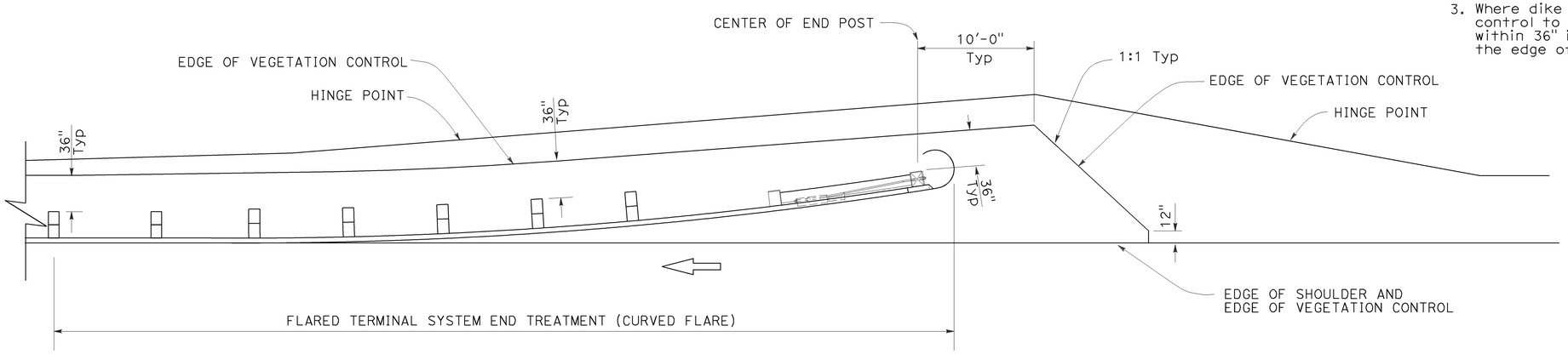

PLAN

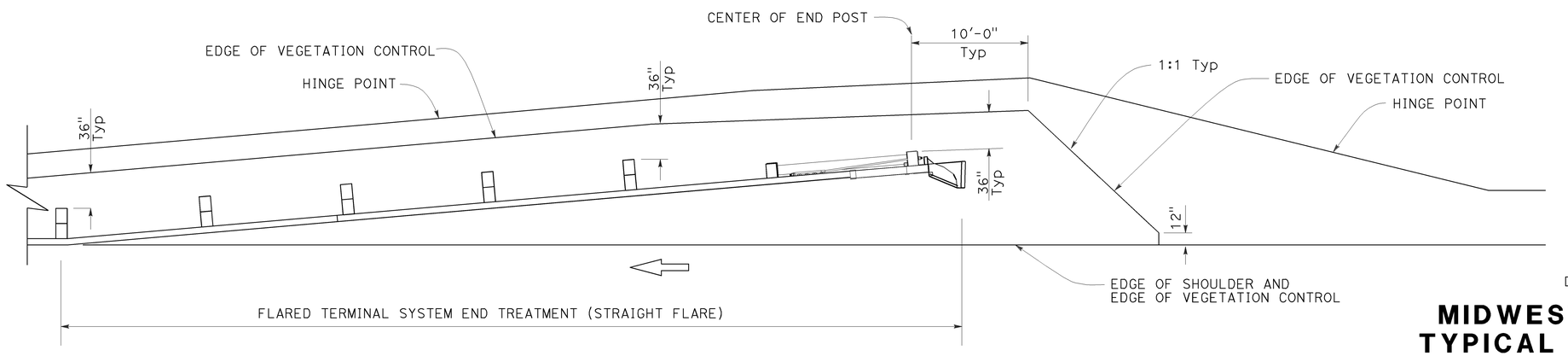

PLAN

NOTES:

1. See Revised Standard Plan RSP A77N5 for additional vegetation control details.
2. Where the distance between back of post and hinge point is less than 42", construct vegetation control to 6" from hinge point while maintaining the 8" block-out at back of post. If the 8" block-out at back of post can not be maintained, construct vegetation control flush with the back edge of post.
3. Where dike is constructed under railing, construct vegetation control to back edge of dike. Where paved shoulder is constructed within 36" in front of the post, construct vegetation control to the edge of paved shoulder.

STATE OF CALIFORNIA
DEPARTMENT OF TRANSPORTATION

MIDWEST GUARDRAIL SYSTEM TYPICAL VEGETATION CONTROL FOR TERMINAL SYSTEM END TREATMENTS

NO SCALE

RSP A77N6 DATED JULY 19, 2013 SUPPLEMENTS THE STANDARD PLANS BOOK DATED 2010.

REVISED STANDARD PLAN RSP A77N6

2010 REVISED STANDARD PLAN RSP A77N6

6-12-13

Dist	COUNTY	ROUTE	POST MILES TOTAL PROJECT	SHEET No.	TOTAL SHEETS
05	SLO	1	17.7/59.0	34	48

Randell D. Hiatt
REGISTERED CIVIL ENGINEER

July 19, 2013
PLANS APPROVAL DATE

REGISTERED PROFESSIONAL ENGINEER
Randell D. Hiatt
No. C50200
Exp. 6-30-15
CIVIL
STATE OF CALIFORNIA

THE STATE OF CALIFORNIA OR ITS OFFICERS OR AGENTS SHALL NOT BE RESPONSIBLE FOR THE ACCURACY OR COMPLETENESS OF SCANNED COPIES OF THIS PLAN SHEET.

TO ACCOMPANY PLANS DATED 6-8-15

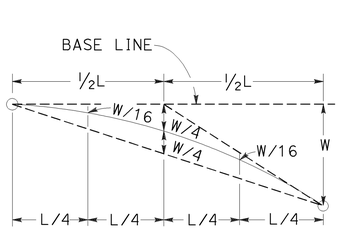

TYPICAL PARABOLIC LAYOUT

BASE LINE (EDGE OF PAVED SHOULDER OR OFFSET LINE OF EDGE OF TRAVELED WAY)

$$Y = \frac{WX^2}{L^2}$$

Y = OFFSET FROM BASE LINE
W = MAXIMUM OFFSET
X = DISTANCE ALONG BASE LINE
L = LENGTH OF FLARE

PARABOLIC FLARE OFFSETS

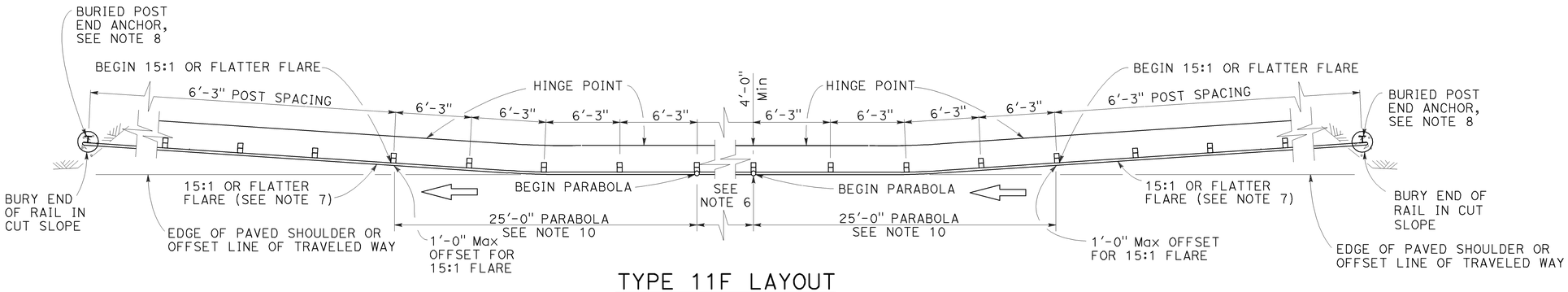

TYPE 11F LAYOUT

(Embankment MGS installation with a buried end anchor treatment at each end of railing)
See Notes 4 and 9

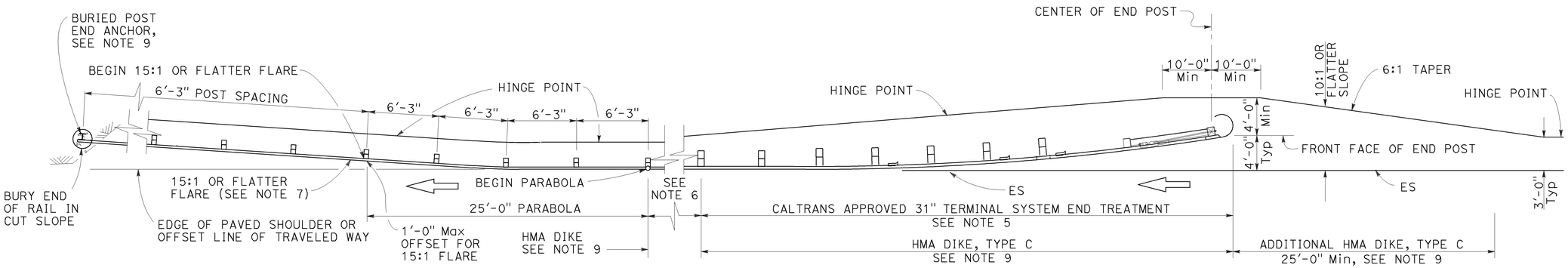

TYPE 11G LAYOUT

(Embankment MGS installation with 31" flared end treatment and a buried end anchor treatment at the ends of railing)
See Notes 4 and 9

NOTES:

1. Line post, blocks and hardware to be used are shown on Revised Standard Plans RSP A77L1, RSP A77L2, RSP A77M1, RSP A77N1 and RSP A77N2.
2. MGS post spacing to be 6'-3" center to center, except as otherwise noted.
3. Except as noted, line posts are 6" x 8" x 6'-0" wood with 6" x 12" x 1'-2" wood blocks. W6 x 8.5 or W6 x 9 steel posts, 6'-0" in length, with 6" x 12" x 1'-2" notched wood blocks or plastic blocks may be used for 6" x 8" x 6'-0" wood post with 6" x 12" x 1'-2" wood blocks where applicable and when specified.
4. Layout Types 11D through 11L, shown on the A77P Series of Standard Plans, are typically used where MGS is recommended to shield embankment slopes and a crashworthy 31" end treatment is required for both directions of traffic.
5. The type of 31" terminal system end treatment to be used will be shown on the Project Plans.
6. Dependent on site conditions (embankment height and side slope), construction of additional MGS (length equal to multiples of 12'-6" with 6'-3" post spacing) may be advisable.
7. The 15:1 or flatter flare used with buried end anchors is based on the edge of the paved shoulder or offset line of edge of the traveled way. The length of MGS within the 15:1 or flatter flare is based on site conditions and should be a length equal to multiples of 12'-6".
8. For details of the buried post end anchor used with Type 11F and 11G Layouts, see Revised Standard Plan RSP A77T2.
9. Where placement of dike is required with MGS installations, see Revised Standard Plan RSP A77N4 for dike positioning details.
10. For typical flare offsets for 25'-0" length parabola with maximum offset of 1'-0", see Revised Standard Plan RSP A77P1.

STATE OF CALIFORNIA
DEPARTMENT OF TRANSPORTATION

MIDWEST GUARDRAIL SYSTEM TYPICAL LAYOUTS FOR EMBANKMENTS

NO SCALE

RSP A77P3 DATED JULY 19, 2013 SUPPLEMENTS THE STANDARD PLANS BOOK DATED 2010.

REVISED STANDARD PLAN RSP A77P3

2010 REVISED STANDARD PLAN RSP A77P3

6-19-13

Dist	COUNTY	ROUTE	POST MILES TOTAL PROJECT	SHEET No.	TOTAL SHEETS
05	SLO	1	17.7/59.0	35	48

Randell D. Hiatt
REGISTERED CIVIL ENGINEER

November 15, 2013
PLANS APPROVAL DATE

REGISTERED PROFESSIONAL ENGINEER
Randell D. Hiatt
No. C50200
Exp. 6-30-15
CIVIL
STATE OF CALIFORNIA

THE STATE OF CALIFORNIA OR ITS OFFICERS OR AGENTS SHALL NOT BE RESPONSIBLE FOR THE ACCURACY OR COMPLETENESS OF SCANNED COPIES OF THIS PLAN SHEET.

TO ACCOMPANY PLANS DATED 6-8-15

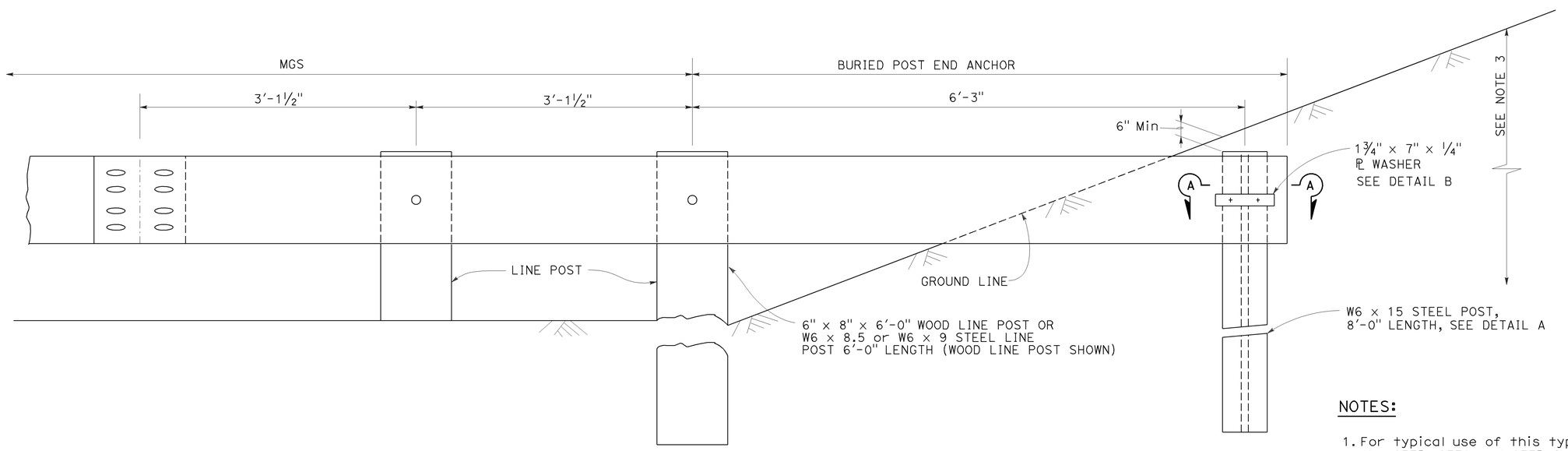

BURIED POST END ANCHOR

See Note 3

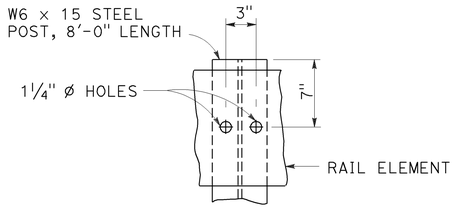

DETAIL A

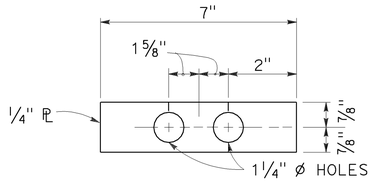

DETAIL B

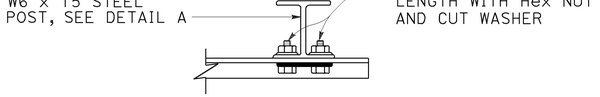

SECTION A-A

NOTES:

1. For typical use of this type of end anchor with MGS see the A77P, A77Q and A77R Series of the Standard Plans.
2. Holes excavation in the slope to construct the buried post end anchor shall be backfilled with selected earth, placed in layers approximately 1'-0" thick. Each layer shall be moistened and thoroughly compacted.
3. The buried post end anchor shall only be constructed at those locations where the slope perpendicular to the roadway is non-traversable.

STATE OF CALIFORNIA
DEPARTMENT OF TRANSPORTATION

MIDWEST GUARDRAIL SYSTEM BURIED POST END ANCHOR

NO SCALE

RSP A77T2 DATED NOVEMBER 15, 2013 SUPERSEDES RSP A77T2
DATED JULY 19, 2013 THAT SUPPLEMENTS THE STANDARD PLANS BOOK DATED 2010.

REVISED STANDARD PLAN RSP A77T2

2010 REVISED STANDARD PLAN RSP A77T2

10-4-13

Dist	COUNTY	ROUTE	POST MILES TOTAL PROJECT	SHEET No.	TOTAL SHEETS
05	SLO	1	17.7/59.0	36	48

REGISTERED CIVIL ENGINEER

July 19, 2013
PLANS APPROVAL DATE

REGISTERED PROFESSIONAL ENGINEER
Michael Janzen
No. 44788
Exp. 03-31-14
CIVIL
STATE OF CALIFORNIA

THE STATE OF CALIFORNIA OR ITS OFFICERS OR AGENTS SHALL NOT BE RESPONSIBLE FOR THE ACCURACY OR COMPLETENESS OF SCANNED COPIES OF THIS PLAN SHEET.

TO ACCOMPANY PLANS DATED 6-8-15

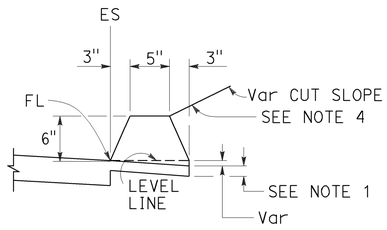

TYPE A
See Note 3

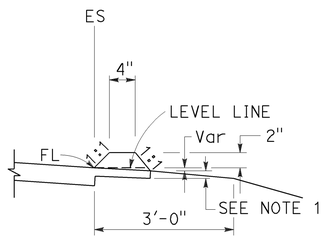

TYPE C

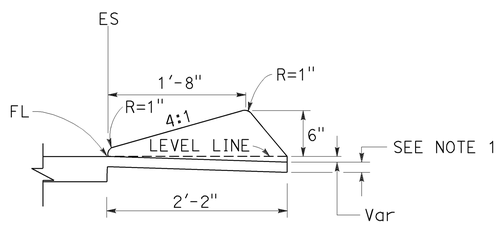

TYPE D

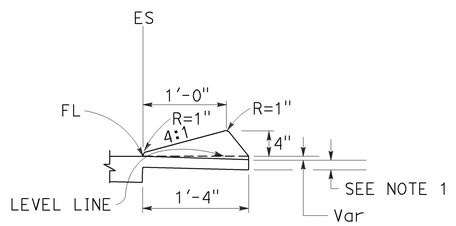

TYPE E

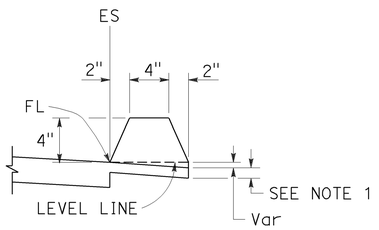

TYPE F
See Note 5

DIKES

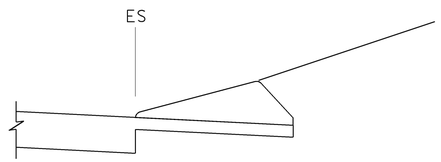

CASE C-1
Cut Slope

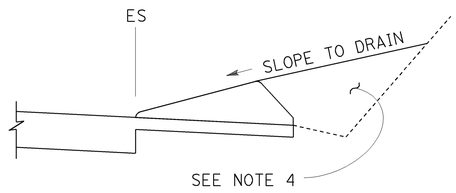

CASE C-2
Cut Slope

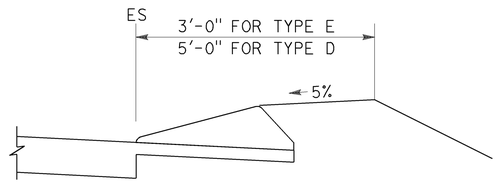

CASE F

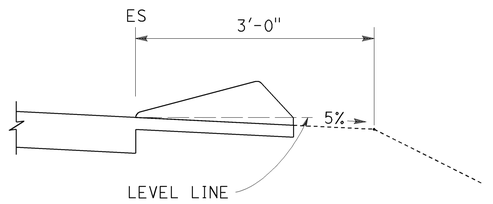

CASE R
See Note 2

TYPE D AND E BACKFILL DETAILS

NOTES:

1. For HMA shoulders only, extend top layer of HMA placed on the shoulder under dike with no joint at the ES. For projects with OGFC shoulders, do not extend OGFC under dike. See project plans for modified dike detail.
2. Case R applies to retrofit only projects where restrictive conditions do not provide enough width for Case F backfill.
3. Type A dike only to be used where restrictive slope conditions do not provide enough width to use Type D or Type E dike.
4. Fill and compact with excavated material to top of dike.
5. Use Type F dike, where dike is required with guard railing installations. See Revised Standard Plan RSP A77N4 for dike positioning details.

DIKE QUANTITIES

TYPE	CUBIC YARDS PER LINEAR FOOT
A	0.0135
C	0.0038
D	0.0293
E	0.0130
F	0.0066

Quantities based on 5% cross slope.

STATE OF CALIFORNIA
DEPARTMENT OF TRANSPORTATION

HOT MIX ASPHALT DIKES

NO SCALE

RSP A87B DATED JULY 19, 2013 SUPERSEDES STANDARD PLAN A87B
DATED MAY 20, 2011 - PAGE 120 OF THE STANDARD PLANS BOOK DATED 2010.

REVISED STANDARD PLAN RSP A87B

Dist	COUNTY	ROUTE	POST MILES TOTAL PROJECT	SHEET No.	TOTAL SHEETS
05	SLO	1	17.7/59.0	37	48

REGISTERED CIVIL ENGINEER

July 19, 2013
PLANS APPROVAL DATE

REGISTERED PROFESSIONAL ENGINEER
Gurinderpal Bhullar
No. C48815
Exp. 9-30-14
CIVIL
STATE OF CALIFORNIA

THE STATE OF CALIFORNIA OR ITS OFFICERS OR AGENTS SHALL NOT BE RESPONSIBLE FOR THE ACCURACY OR COMPLETENESS OF SCANNED COPIES OF THIS PLAN SHEET.

TO ACCOMPANY PLANS DATED 6-8-15

TABLE 1

TAPER LENGTH CRITERIA AND CHANNELIZING DEVICE SPACING

SPEED (S)	MINIMUM TAPER LENGTH * FOR WIDTH OF OFFSET 12 FEET (W)				MAXIMUM CHANNELIZING DEVICE SPACING		
					X	Y	Z **
	TANGENT 2L	MERGING L	SHIFTING L/2	SHOULDER L/3	TAPER	TANGENT	CONFLICT
mph	ft	ft	ft	ft	ft	ft	ft
20	160	80	40	27	20	40	10
25	250	125	63	42	25	50	12
30	360	180	90	60	30	60	15
35	490	245	123	82	35	70	17
40	640	320	160	107	40	80	20
45	1080	540	270	180	45	90	22
50	1200	600	300	200	50	100	25
55	1320	660	330	220	55	110	27
60	1440	720	360	240	60	120	30
65	1560	780	390	260	65	130	32
70	1680	840	420	280	70	140	35

* - For other offsets, use the following merging taper length formula for L:
For speed of 40 mph or less, $L = WS^2/60$
For speed of 45 mph or more, $L = WS$

Where: L = Taper length in feet
W = Width of offset in feet
S = Posted speed limit, off-peak 85th-percentile speed prior to work starting, or the anticipated operating speed in mph

** - Use for taper and tangent sections where there are no pavement markings or where there is a conflict between existing pavement markings and channelizers (CA).

TABLE 2

LONGITUDINAL BUFFER SPACE AND FLAGGER STATION SPACING

SPEED *	Min D **	DOWNGRADE Min D ***		
		-3%	-6%	-9%
mph	ft	ft	ft	ft
20	115	116	120	126
25	155	158	165	173
30	200	205	215	227
35	250	257	271	287
40	305	315	333	354
45	360	378	400	427
50	425	446	474	507
55	495	520	553	593
60	570	598	638	686
65	645	682	728	785
70	730	771	825	891

* - Speed is posted speed limit, off-peak 85th-percentile speed prior to work starting, or the anticipated operating speed in mph

** - Longitudinal buffer space or flagger station spacing

*** - Use on sustained downgrade steeper than -3 percent and longer than 1 mile.

TABLE 3

ADVANCE WARNING SIGN SPACING

ROAD TYPE	DISTANCE BETWEEN SIGNS *		
	A	B	C
	ft	ft	ft
URBAN - 25 mph OR LESS	100	100	100
URBAN - MORE THAN 25 mph TO 40 mph	250	250	250
URBAN - MORE THAN 40 mph	350	350	350
RURAL	500	500	500
EXPRESSWAY / FREEWAY	1000	1500	2640

* - The distances are approximate, are intended for guidance purposes only, and should be applied with engineering judgment. These distances should be adjusted by the Engineer for field conditions, if necessary, by increasing or decreasing the recommmended distances.

2010 REVISED STANDARD PLAN RSP T9

STATE OF CALIFORNIA
DEPARTMENT OF TRANSPORTATION

TRAFFIC CONTROL SYSTEM TABLES FOR LANE AND RAMP CLOSURES

NO SCALE

RSP T9 DATED JULY 19, 2013 SUPERSEDES RSP T9 DATED APRIL 19, 2013 THAT SUPPLEMENTS THE STANDARD PLANS BOOK DATED 2010.

REVISED STANDARD PLAN RSP T9

4-30-13

Dist	COUNTY	ROUTE	POST MILES TOTAL PROJECT	SHEET No.	TOTAL SHEETS
05	SLO	1	17.7/59.0	38	48

REGISTERED CIVIL ENGINEER

April 19, 2013
PLANS APPROVAL DATE

REGISTERED PROFESSIONAL ENGINEER
Gurinderpal Bhullar
No. C48815
Exp. 9-30-14
CIVIL
STATE OF CALIFORNIA

THE STATE OF CALIFORNIA OR ITS OFFICERS OR AGENTS SHALL NOT BE RESPONSIBLE FOR THE ACCURACY OR COMPLETENESS OF SCANNED COPIES OF THIS PLAN SHEET.

TO ACCOMPANY PLANS DATED 6-8-15

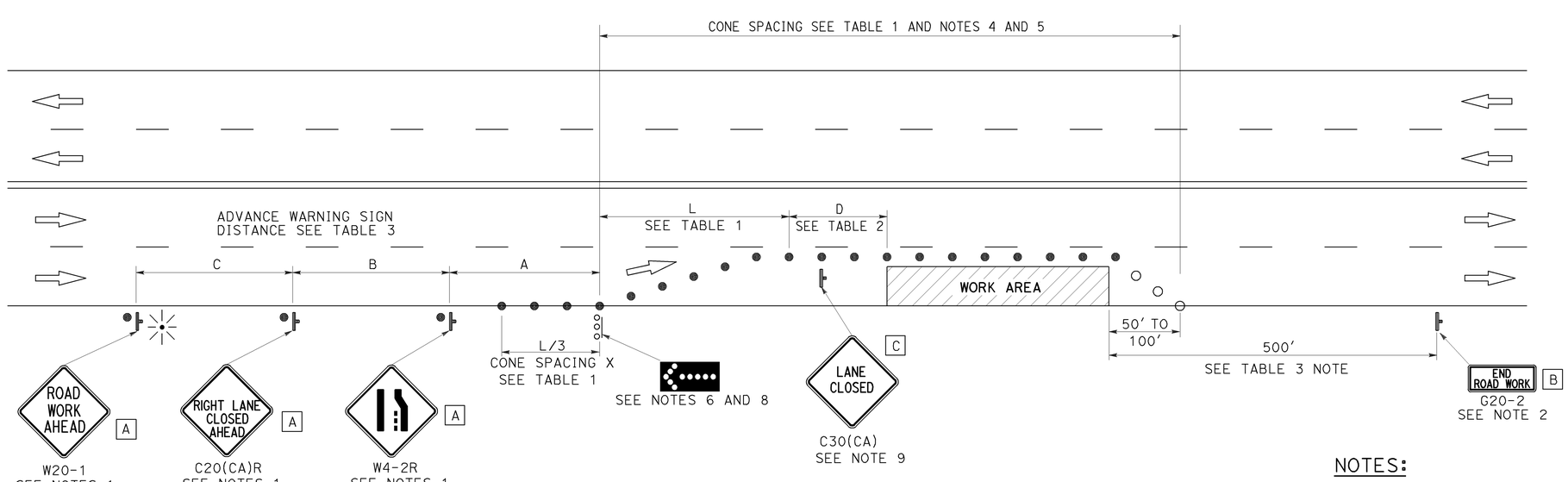

TYPICAL LANE CLOSURE

NOTES:

1. Each advance warning sign shall be equipped with at least two flags for daytime closure. Each flag shall be at least 16" x 16" in size and shall be orange or fluorescent red-orange in color. Flashing beacons shall be placed at the locations indicated for lane closure during hours of darkness.
2. A G20-2 "END ROAD WORK" sign, as appropriate, shall be placed at the end of the lane closure unless the end of work area is obvious, or ends within a larger project's limits.
3. If the W20-1 sign would follow within 2000' of a stationary W20-1 or G20-1 "ROAD WORK NEXT _____ MILES", use a C20(CA) sign for the first advance warning sign.
4. All cones used for lane closures during the hours of darkness shall be fitted with retroreflective bands (or sleeves) as specified in the specifications.
5. Portable delineators, placed at one-half the spacing indicated for traffic cones, may be used instead of cones for daytime closures only.
6. Flashing arrow sign shall be either Type I or Type II.
7. For approach speeds over 50 mph, use the "Traffic Control System for Lane Closure On Freeways And Expressways" plan for lane closure details and requirements.
8. A minimum 1500' of sight distance shall be provided where possible for vehicles approaching the first flashing arrow sign. Lane closures shall not begin at the top of crest vertical curve or on a horizontal curve.
9. Place a C30(CA) sign every 2000' throughout length of lane closure.
10. Median lane closures shall conform to the details as shown except that C20(CA)L and W4-2L signs shall be used.
11. At least one person shall be assigned to provide full time maintenance of traffic control devices for lane closure unless, otherwise directed by the Engineer.

NOTES:

See Revised Standard Plan RSP T9 for tables.

Use cone spacing X for taper segment, Y for tangent segment or Z for conflict situations, as approriate, per Table 1, unless X, Y, or Z cone spacing is shown on this sheet.

Unless otherwise specified in the special provisions, all temporary warning signs shall have black legend on fluorescent orange background.

California codes are designated by (CA). Otherwise, Federal (MUTCD) codes are shown.

LEGEND

- TRAFFIC CONE
- TRAFFIC CONE (OPTIONAL TAPER)
- TEMPORARY TRAFFIC CONTROL SIGN
- FLASHING ARROW SIGN (FAS)
- FAS SUPPORT OR TRAILER
- PORTABLE FLASHING BEACON

SIGN PANEL SIZE (Min)

A	48" x 48"
B	36" x 18"
C	30" x 30"

STATE OF CALIFORNIA
DEPARTMENT OF TRANSPORTATION

TRAFFIC CONTROL SYSTEM FOR LANE CLOSURE ON MULTILANE CONVENTIONAL HIGHWAYS

NO SCALE

RSP T11 DATED APRIL 19, 2013 SUPERSEDES STANDARD PLAN T11 DATED MAY 20, 2011 - PAGE 239 OF THE STANDARD PLANS BOOK DATED 2010.

REVISED STANDARD PLAN RSP T11

2010 REVISED STANDARD PLAN RSP T11

4-2-13

Dist	COUNTY	ROUTE	POST MILES TOTAL PROJECT	SHEET No.	TOTAL SHEETS
05	SLO	1	17.7/59.0	39	48

Devinder Singh
REGISTERED CIVIL ENGINEER

October 17, 2014
PLANS APPROVAL DATE

REGISTERED PROFESSIONAL ENGINEER
Devinder Singh
No. C50470
Exp. 6-30-15
CIVIL
STATE OF CALIFORNIA

THE STATE OF CALIFORNIA OR ITS OFFICERS OR AGENTS SHALL NOT BE RESPONSIBLE FOR THE ACCURACY OR COMPLETENESS OF SCANNED COPIES OF THIS PLAN SHEET.

TO ACCOMPANY PLANS DATED 6-8-15

NOTES:

See Revised Standard Plan RSP T9 for tables.

Use cone spacing X for taper segment, Y for tangent segment or Z for conflict situations, as approriate, per Table 1, unless X, Y, or Z cone spacing is shown on this sheet.

Unless otherwise specified in the special provisions, all temporary warning signs shall have black legend on fluorescent orange background.

California codes are designated by (CA). Otherwise, Federal (MUTCD) codes are shown.

TYPICAL LANE CLOSURE WITH REVERSIBLE CONTROL

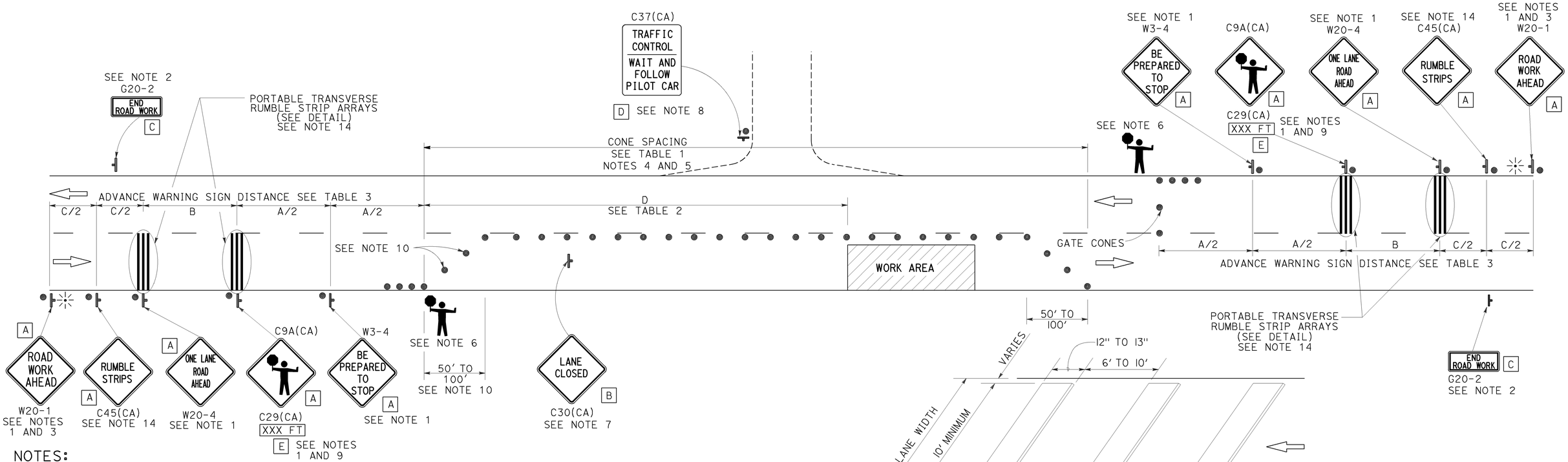

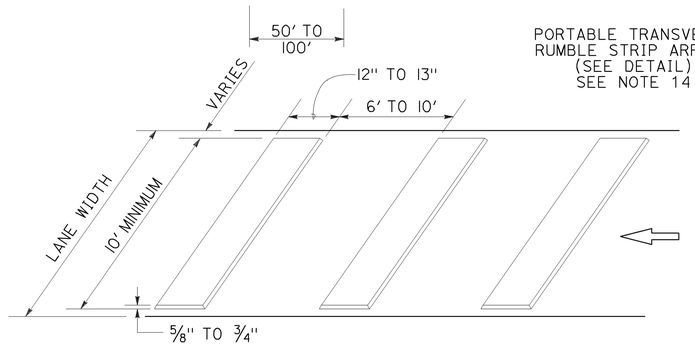

PORTABLE TRANSVERSE RUMBLE STRIP ARRAY DETAIL

NOTES:

1. Each advance warning sign in each direction of travel shall be equipped with at least two flags for daytime closure. Each flag shall be at least 16" x 16" in size and shall be orange or fluorescent red-orange in color. Flashing beacons shall be placed at the locations indicated for lane closure during hours of darkness.
2. A G20-2 "END ROAD WORK" sign, as appropriate, shall be placed at the end of the lane control unless the end of work area is obvious, or ends within a larger project's limits.
3. If the W20-1 sign would follow within 2000' of a stationary W20-1 or G20-1 "ROAD WORK NEXT _____ MILES", use a W20-4 sign for the first advance warning sign.
4. All cones used for lane closures during the hours of darkness shall be fitted with retroreflective bands (or sleeves) as specified in the specifications.
5. Portable delineators, placed at one-half the spacing indicated for traffic cones, may be used instead of cones for daytime closures only.
6. Additional advance flaggers may be required. Flagger should stand in a conspicuous place, be visible to approaching traffic as well as approaching vehicles after the first vehicle has stopped. During the hours of darkness, the flagging-station and flagger shall be illuminated and clearly visible to approaching traffic. The illumination footprint of the lighting on the ground shall be at least 20' in diameter. Place a minimum of four cones at 50' intervals in advance of flagger station as shown.
7. Place C30(CA) "LANE CLOSED" sign at 500' to 1000' intervals throughout extended work areas. They are optional if the work area is visible from the flagger station.
8. When a pilot car is used, place a C37(CA) "TRAFFIC CONTROL-WAIT AND FOLLOW PILOT CAR" sign with black legend on white background at all intersections, driveways and alleys without a flagger within traffic control area. Signs shall be clean and visible at all times. Where traffic can not be effectively self-regulated, at least one flagger shall be used at each intersection within traffic control area.
9. An optional C29(CA) sign may be placed below the C9A(CA) sign.
10. Either traffic cones or barricades shall be placed on the taper. Barricades shall be Type I, II, or III.
11. The color of the portable transverse rumble strips shall be black or orange. Use 2 arrays, each array shall consist of 3 rumble strips.
12. Portable transverse rumble strips shall not be placed on sharp horizontal or vertical curves nor shall they be placed through pedestrian crossings.
13. If the portable transverse rumble strips become out of alignment (skewed) by more than 6 inches, measured from one end to the other, they shall be readjusted to bring the placement back to the original location.
14. Portable transverse rumble strips are not required if any one of the following conditions is satisfied:
    A. Work duration occupies a location for four hours or less
    B. Posted speed limit is below 45 MPH
    C. Work is of emergency nature
    D. Work zone is in snow or icy weather conditions

LEGEND

- TRAFFIC CONE
- TEMPORARY TRAFFIC CONTROL SIGN
- PORTABLE FLASHING BEACON
- FLAGGER

SIGN PANEL SIZE (Min)

A	48" x 48"
B	30" x 30"
C	36" x 18"
D	36" x 42"
E	20" x 7"

STATE OF CALIFORNIA
DEPARTMENT OF TRANSPORTATION

TRAFFIC CONTROL SYSTEM FOR LANE CLOSURE ON TWO LANE CONVENTIONAL HIGHWAYS

NO SCALE

RSP T13 DATED OCTOBER 17, 2014 SUPERSEDES RSP T13 DATED JULY 18, 2014 AND RSP T13 DATED APRIL 19, 2013 AND STANDARD PLAN T13 DATED MAY 20, 2011 - PAGE 241 OF THE STANDARD PLANS BOOK DATED 2010.

REVISED STANDARD PLAN RSP T13

2010 REVISED STANDARD PLAN RSP T13

9-26-14

TYPICAL RAMP CLOSURES

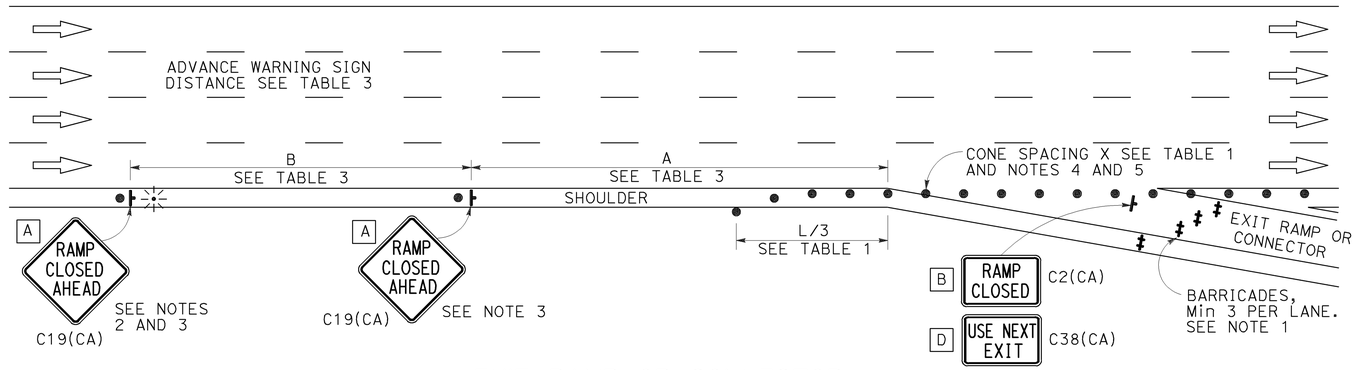

EXIT RAMP OR CONNECTOR

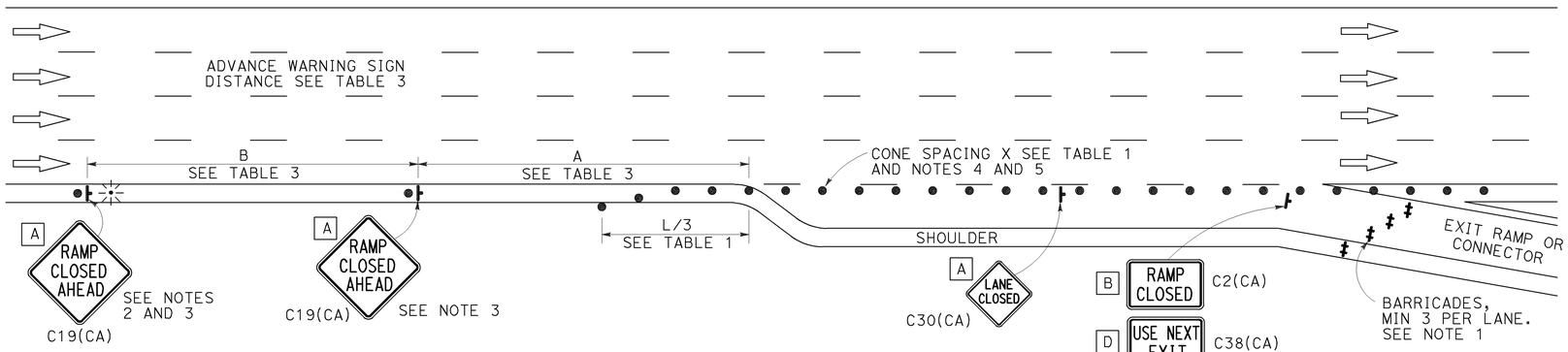

EXIT RAMP OR CONNECTOR WITH ADDITIONAL LANE

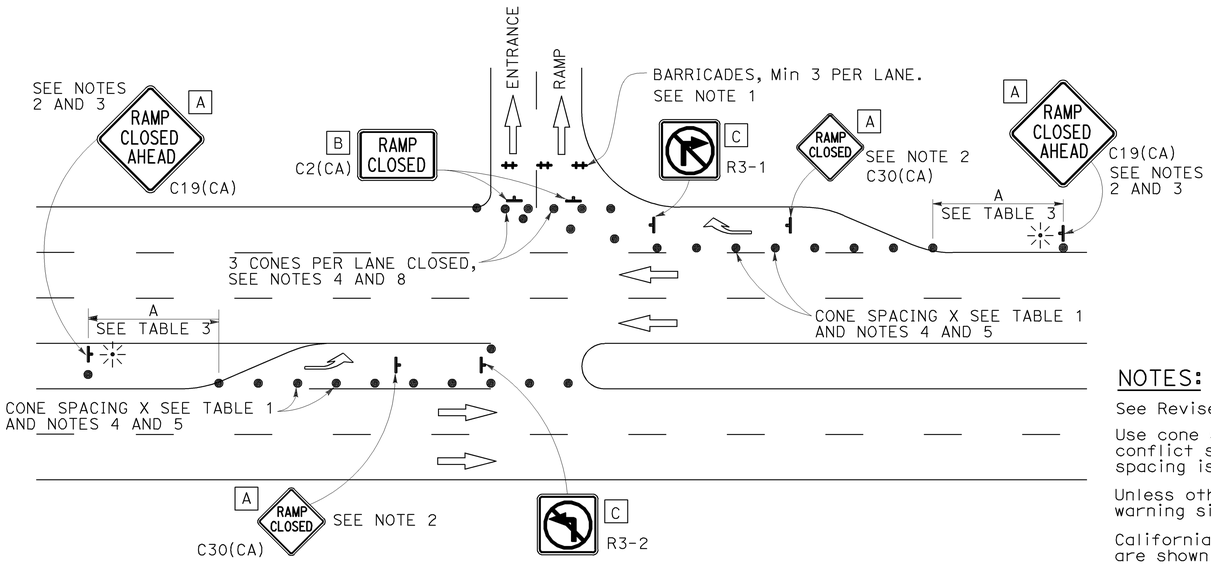

ENTRANCE RAMP WITH TURNING POCKETS

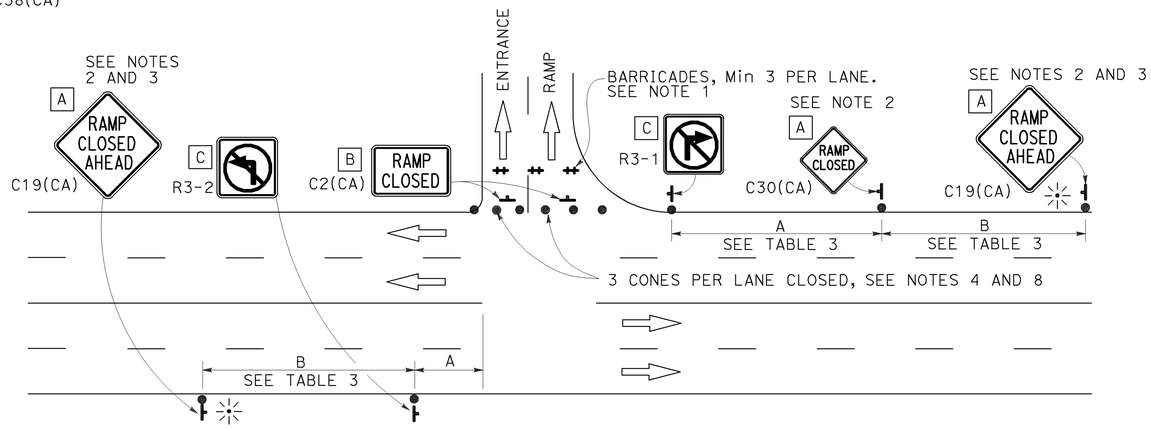

ENTRANCE RAMP WITHOUT TURNING POCKETS

SIGN PANEL SIZE (Min)

- A 48" × 48"
- B 48" × 30"
- C 36" × 36"
- D 48" × 36"

LEGEND

- ● TRAFFIC CONE
- ⊢ TEMPORARY TRAFFIC CONTROL SIGN
- ‡ BARRICADES
- ✳ PORTABLE FLASHING BEACON

Dist	COUNTY	ROUTE	POST MILES TOTAL PROJECT	SHEET No.	TOTAL SHEETS
05	SLO	1	17.7/59.0	40	48

REGISTERED CIVIL ENGINEER

April 19, 2013
PLANS APPROVAL DATE

REGISTERED PROFESSIONAL ENGINEER
Gurinderpal Bhullar
No. C48815
Exp. 9-30-14
CIVIL
STATE OF CALIFORNIA

THE STATE OF CALIFORNIA OR ITS OFFICERS OR AGENTS SHALL NOT BE RESPONSIBLE FOR THE ACCURACY OR COMPLETENESS OF SCANNED COPIES OF THIS PLAN SHEET.

TO ACCOMPANY PLANS DATED 6-8-15

NOTES:

1. Barricades shall be Type I, II, or III for closures lasting one week or less and Type III for closures lasting longer than one week.
2. In addition to placing the C19(CA) "RAMP CLOSED AHEAD" and C30(CA) "RAMP CLOSED" signs, black on orange overlay plates with the word "CLOSED" may be mounted, as directed by the Engineer, on all guide signs that refer to the closed ramp. The letter size on the overlay shall be the same as the guide sign.
3. Each advance C19(CA) "RAMP CLOSED AHEAD" sign shall be equipped with at least two flags for daytime closure. Each flag shall be at least 16" × 16" in size and shall be orange or fluorescent red-orange in color. A flashing beacon shall be placed on top of the first C19(CA) sign during hours of darkness.
4. All cones used for ramp closures during the hours of darkness shall be fitted with retroreflective bands (or sleeves) as specified in the specifications.
5. Portable delineators, placed at one-half the spacing indicated for traffic cones, may be used instead of cones for daytime ramp closures only.
6. At least one person shall be assigned to provide full time maintenance of traffic control devices, unless otherwise directed by the Engineer.
7. The existing "EXIT" signs shall be covered during ramp closures.
8. A minimum of 3 cones shall be placed transversely across each closed lane and shoulder.

NOTES:

See Revised Standard Plan RSP T9 for tables.

Use cone spacing X for taper segment, Y for tangent segment or Z for conflict situations, as approriate, per Table 1, unless X, Y, or Z cone spacing is shown on this sheet.

Unless otherwise specified in the special provisions, all temporary warning signs shall have black legend on fluorescent orange background.

California codes are designated by (CA). Otherwise, Federal (MUTCD) codes are shown.

STATE OF CALIFORNIA
DEPARTMENT OF TRANSPORTATION

TRAFFIC CONTROL SYSTEM FOR RAMP CLOSURE

NO SCALE

RSP T14 DATED APRIL 19, 2013 SUPERSEDES STANDARD PLAN T14
DATED MAY 20, 2011 - PAGE 242 OF THE STANDARD PLANS BOOK DATED 2010.

REVISED STANDARD PLAN RSP T14

2010 REVISED STANDARD PLAN RSP T14

12-18-12

Dist	COUNTY	ROUTE	POST MILES TOTAL PROJECT	SHEET No.	TOTAL SHEETS
05	SLO	1	17.7/59.0	41	48

REGISTERED CIVIL ENGINEER

April 19, 2013
PLANS APPROVAL DATE

REGISTERED PROFESSIONAL ENGINEER
Gurinderpal Bhullar
No. C48815
Exp. 9-30-14
CIVIL
STATE OF CALIFORNIA

THE STATE OF CALIFORNIA OR ITS OFFICERS OR AGENTS SHALL NOT BE RESPONSIBLE FOR THE ACCURACY OR COMPLETENESS OF SCANNED COPIES OF THIS PLAN SHEET.

TO ACCOMPANY PLANS DATED 6-8-15

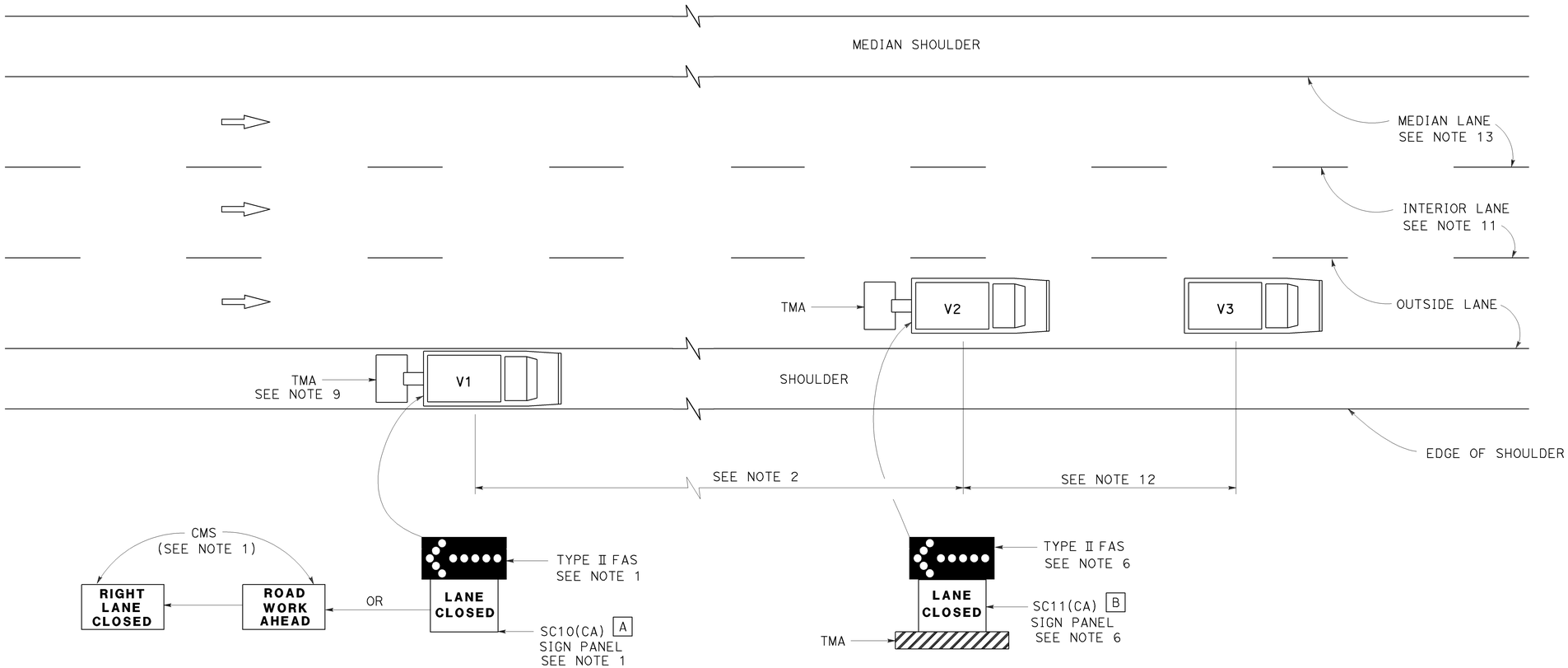

SIGN PANEL SIZE (Min)

A 66" x 36"

B 54" x 42"

LEGEND

V1	SIGN VEHICLE
V2	SHADOW VEHICLE
V3	WORK/APPLICATION VEHICLE
	FLASHING ARROW SIGN (FAS)
CMS	CHANGEABLE MESSAGE SIGN
TMA	TRUCK-MOUNTED ATTENUATOR

MOVING LANE CLOSURE ON MEDIAN LANE OR OUTSIDE LANE OF MULTILANE HIGHWAYS

NOTES:

1. Either a changeable message sign or a SC10(CA) sign panel and a Type II flashing arrow sign shall be mounted on the rear of sign vehicle V1. The changeable message sign shall be sequenced to show the "ROAD WORK AHEAD" message first, followed by the "RIGHT LANE CLOSED" message. For median lane closure, the flashing arrow symbol shall be reversed with the arrowhead on the right and the changeable message sign shall show "LEFT LANE CLOSED".
2. If traffic queues develop, sign vehicle V1 should be positioned upstream from the end of queue. Sign vehicle V1 shall be positioned where highly visible when shoulders are not available.
3. A minimum sight distance of 1500′ should be provided in advance of sign vehicle V1.
4. Sign vehicle V1 should remain at the beginning of horizontal or vertical curves until the other vehicles (V2 and V3) are far enough beyond the curve to resume the minimum sight distance of 1500′.
5. Vehicle-mounted sign panels shall have Type III or above retroreflective sheeting, black on white, or black on fluorescent orange, with 6" minimum series D letters per Caltrans sign specifications.
6. Shadow vehicle V2 shall be equipped with a truck-mounted attenuator. The sign panel shown and a Type II flashing arrow sign shall be mounted on the rear of shadow vehicle V2. For median lane closure the flashing arrow sign symbol shall be displayed with the arrowhead on the right.
7. All vehicles used for lane closures shall be equipped with two-way radios, and the vehicle operators shall maintain communication during the work or application operation.
8. All vehicles shall be equipped with flashing or rotating amber lights.
9. If sign vehicle V1 encroaches into the traffic lane due to insufficient shoulder width, sign vehicle V1 shall be equipped with a truck-mounted attenuator. Sign vehicle V1 shall stay as close to the edge of shoulder as practicable.
10. Where workers would be on foot in the work area, a stationary type lane closure (Revised Standard Plan T10, T11, etc., as applicable) shall be used instead of this plan.
11. For moving lane closure on interior lane of multilane highways, use Revised Standard Plan T16.
12. The spacing between work vehicle(s) and the shadow vehicles, and between each shadow vehicle should be minimized to deter road users from driving in between.
13. When the work/application vehicle V3 occupies the median lane, sign vehicle V1 should drive in the median shoulder and indicate left lane closed ahead.

STATE OF CALIFORNIA
DEPARTMENT OF TRANSPORTATION

TRAFFIC CONTROL SYSTEM FOR MOVING LANE CLOSURE ON MULTILANE HIGHWAYS

NO SCALE

RSP T15 DATED APRIL 19, 2013 SUPERSEDES STANDARD PLAN T15
DATED MAY 20, 2011 - PAGE 243 OF THE STANDARD PLANS BOOK DATED 2010.

REVISED STANDARD PLAN RSP T15

2010 REVISED STANDARD PLAN RSP T15

12-18-12

Dist	COUNTY	ROUTE	POST MILES TOTAL PROJECT	SHEET No.	TOTAL SHEETS
05	SLO	1	17.7/59.0	42	48

REGISTERED CIVIL ENGINEER

April 19, 2013
PLANS APPROVAL DATE

Gurinderpal Bhullar
No. C48815
Exp. 9-30-14
CIVIL
REGISTERED PROFESSIONAL ENGINEER
STATE OF CALIFORNIA

THE STATE OF CALIFORNIA OR ITS OFFICERS OR AGENTS SHALL NOT BE RESPONSIBLE FOR THE ACCURACY OR COMPLETENESS OF SCANNED COPIES OF THIS PLAN SHEET.

TO ACCOMPANY PLANS DATED 6-8-15

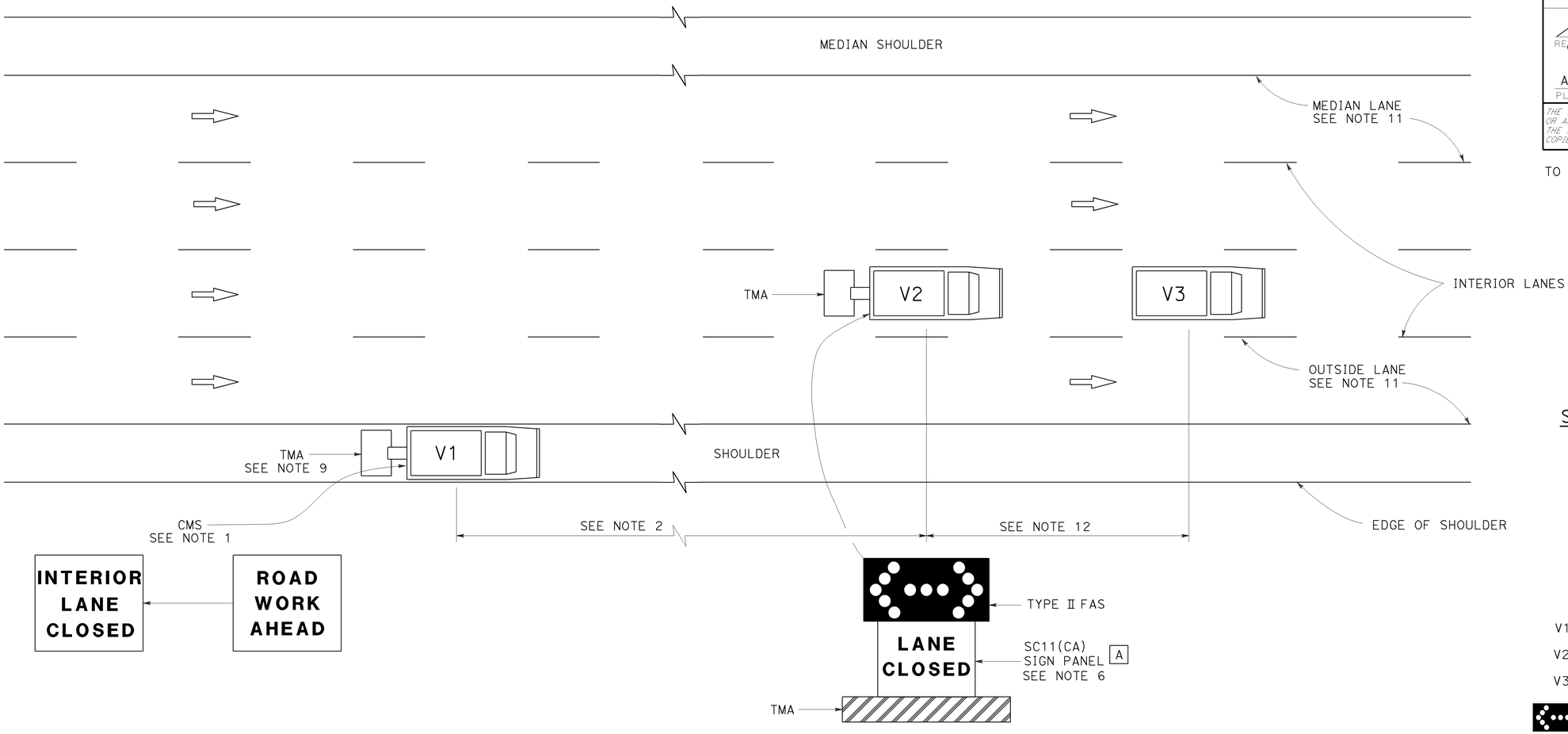

MOVING LANE CLOSURE ON INTERIOR LANE OF MULTILANE HIGHWAYS

SIGN PANEL SIZE (Min)

A 54" x 42"

LEGEND

V1	SIGN VEHICLE
V2	SHADOW VEHICLE
V3	WORK/APPLICATION VEHICLE
	FLASHING ARROW SIGN (FAS) IN FLASHING DOUBLE ARROW MODE
CMS	CHANGEABLE MESSAGE SIGN
TMA	TRUCK-MOUNTED ATTENUATOR

NOTES:

1. A changeable message sign shall be mounted on the rear of sign vehicle V1. The changeable message sign shall be sequenced to show the "ROAD WORK AHEAD" message first, followed by the "INTERIOR LANE CLOSED" message. The message "CENTER LANE CLOSED" may be used in place of the "INTERIOR LANE CLOSED" message.
2. If traffic queues develop, sign vehicle V1 should be positioned upstream from the end of queue. Sign vehicle V1 shall be positioned where highly visible when shoulders are not available.
3. A minimum sight distance of 1500′ should be provided in advance of sign vehicle V1.
4. Sign vehicle V1 should remain at the beginning of horizontal or vertical curves until the other vehicles (V2 and V3) are far enough beyond the curve to resume the minimum sight distance of 1500′.
5. Vehicle-mounted sign panels shall have Type III or above retroreflective sheeting, black on white, or black on fluorescent orange, with 6" minimum series D letters per Caltrans sign specifications.
6. Shadow vehicle V2 shall be equipped with a truck-mounted attenuator. The sign panel shown and a Type II flashing arrow sign shall be mounted on the rear of shadow vehicle V2.
7. All vehicles used for lane closures shall be equipped with two-way radios, and the vehicle operators shall maintain communication during the work or application operation.
8. All vehicles shall be equipped with flashing or rotating amber lights.
9. If sign vehicle V1 encroaches into the traffic lane due to insufficient shoulder width, sign vehicle V1 shall be equipped with a truck-mounted attenuator. Sign vehicle V1 shall stay as close to the edge of shoulder as practicable.
10. Where workers would be on foot in the work area, a stationary type lane closure (Revised Standard Plan T10, T11 etc., as applicable) shall be used instead of this plan.
11. For moving lane closure on median lane or outside lane of multilane highways, use Revised Standard Plan T15.
12. The spacing between work vehicle(s) and the shadow vehicles, and between each shadow vehicle should be minimized to deter road users from driving in between.

STATE OF CALIFORNIA
DEPARTMENT OF TRANSPORTATION

TRAFFIC CONTROL SYSTEM FOR MOVING LANE CLOSURE ON MULTILANE HIGHWAYS

NO SCALE

RSP T16 DATED APRIL 19, 2013 SUPERSEDES STANDARD PLAN T16
DATED MAY 20, 2011 - PAGE 244 OF THE STANDARD PLANS BOOK DATED 2010.

REVISED STANDARD PLAN RSP T16

2010 REVISED STANDARD PLAN RSP T16

12-18-12

Dist	COUNTY	ROUTE	POST MILES TOTAL PROJECT	SHEET No.	TOTAL SHEETS
05	SLO	1	17.7/59.0	43	48

REGISTERED CIVIL ENGINEER

April 19, 2013
PLANS APPROVAL DATE

REGISTERED PROFESSIONAL ENGINEER
Gurinderpal Bhullar
No. C48815
Exp. 9-30-14
CIVIL
STATE OF CALIFORNIA

THE STATE OF CALIFORNIA OR ITS OFFICERS OR AGENTS SHALL NOT BE RESPONSIBLE FOR THE ACCURACY OR COMPLETENESS OF SCANNED COPIES OF THIS PLAN SHEET.

TO ACCOMPANY PLANS DATED 6-8-15

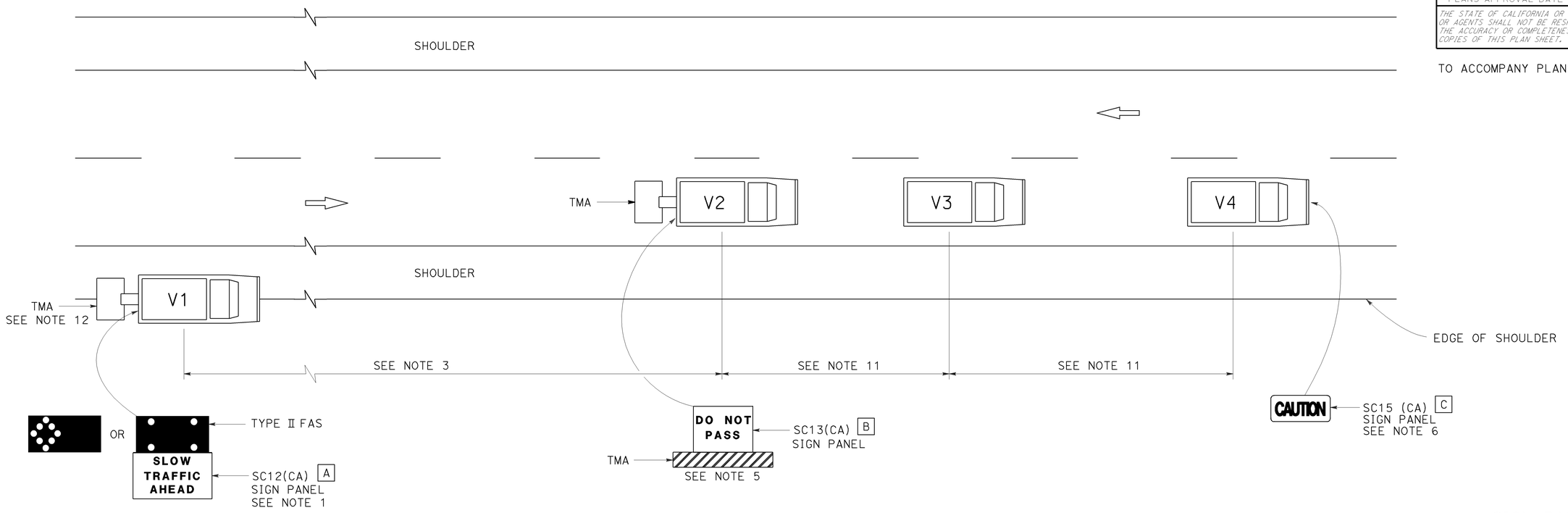

NOTES:

1. Either a changeable message sign or a SC12(CA) "SLOW TRAFFIC AHEAD" sign shall be mounted on the rear of sign vehicle V1. The changeable message sign shall be sequenced to show the "CAUTION" message first, follow by the "SLOW TRAFFIC AHEAD" message. A Type II flashing arrow sign may be used with the SC12(CA) sign panel.
2. Sign vehicle V1 should be positioned where highly visible when shoulders are not available.
3. If traffic queues develop, sign vehicle V1 should be positioned upstream from the end of queue.
4. Vehicle-mounted sign panels shall have Type III or above retroreflective sheeting, black on white, or black on fluorescent orange, with 6" minimum series D letters per Caltrans sign specifications.
5. Shadow vehicle shall be equipped with a truck-mounted attenuator. The sign panel shown shall be mounted on the rear of shadow vehicle V2. The message "LANE CLOSED" may be used in place of the "DO NOT PASS" message.
6. The sign panel shown shall be mounted on the front of sign vehicle V4, facing opposing traffic.
7. All vehicles shall be equipped with flashing or rotating amber lights.
8. Sign vehicle V4 will not be required when the work and vehicles V2 and V3 are 2' or more from the centerline of the highway during the work or application operations.
9. All vehicles used for lane closures shall be equipped with two-way radios and the vehicle operators shall maintain communication during the work or application operation.
10. This plan shall not be used where workers would be on foot in the work area. Use a stationary type lane closure (Revised Standard Plan T13) for this condition.
11. Minimize spacing between vehicles V2 and V3 and vehicles V3 and V4 to deter road users from driving in between them.
12. If sign vehicle V1 encroaches into the traffic lane due to insufficient shoulder width, sign vehicle V1 shall be equipped with a truck-mounted attenuator. Sign vehicle V1 shall stay as close to the edge of shoulder as practicable.

LEGEND

V1	SIGN VEHICLE
V2	SHADOW VEHICLE
V3	WORK/APPLICATION VEHICLE
V4	SIGN VEHICLE
TMA	TRUCK-MOUNTED ATTENUATOR
	FLASHING ARROW SIGN (FAS) IN FLASHING CAUTION MODE
	FLASHING ARROW SIGN (FAS) IN ALTERNATING DIAMOND CAUTION

SIGN PANEL SIZE (Min)

A	72" x 42"
B	54" x 42"
C	54" x 24"

STATE OF CALIFORNIA
DEPARTMENT OF TRANSPORTATION

TRAFFIC CONTROL SYSTEM FOR MOVING LANE CLOSURE ON TWO LANE HIGHWAYS

NO SCALE

RSP T17 DATED APRIL 19, 2013 SUPERSEDES STANDARD PLAN T17
DATED MAY 20, 2011 - PAGE 245 OF THE STANDARD PLANS BOOK DATED 2010.

REVISED STANDARD PLAN RSP T17

2010 REVISED STANDARD PLAN RSP T17

12-18-12

LEGEND:

AB	ABANDON. IF APPLIED TO CONDUIT, REMOVE CONDUCTORS
BC	INSTALL PULL BOX IN EXISTING CONDUIT RUN
BP	PEDESTRIAN BARRICADE, TYPE AS INDICATED ON PLAN
CB	INSTALL CONDUIT INTO EXISTING PULL BOX
CC	CONNECT NEW AND EXISTING CONDUIT. REMOVE EXISTING CONDUCTORS AND INSTALL CONDUCTORS AS INDICATED
CF	CONDUIT TO REMAIN FOR FUTURE USE. REMOVE CONDUCTORS. INSTALL PULL TAPE
DH	DETECTOR HANDHOLE
FA	FOUNDATION TO BE ABANDONED
IS	INSTALL SIGN ON SIGNAL MAST ARM
NS	NO SLIP BASE ON STANDARD
PEC	PHOTOELECTRIC CONTROL
PEU	PHOTOELECTRIC UNIT
RC	EQUIPMENT OR MATERIAL TO BE REMOVED AND BECOME THE PROPERTY OF THE CONTRACTOR
RE	REMOVE ELECTROLIER, FUSES AND BALLAST. TAPE ENDS OF CONDUCTORS
RL	RELOCATE EQUIPMENT
RR	REMOVE AND REUSE EQUIPMENT
RS	REMOVE AND SALVAGE EQUIPMENT
SC	SPLICE NEW TO EXISTING CONDUCTORS
SD	SERVICE DISCONNECT
TSP	TELEPHONE SERVICE POINT

ABBREVIATIONS

APS	ACCESSIBLE PEDESTRIAN SIGNAL
BBS	BATTERY BACKUP SYSTEM
BC	BOLT CIRCLE
BPB	BICYCLE PUSH BUTTON
C	CONDUIT
CB	CIRCUIT BREAKER
CCTV	CLOSED CIRCUIT TELEVISION
Ckt	CIRCUIT
CMS	CHANGEABLE MESSAGE SIGN
Ctid	CALTRANS IDENTIFICATION
Comm	COMMUNICATION
DLC	LOOP DETECTOR LEAD-IN CABLE
EMS	EXTINGUISHABLE MESSAGE SIGN
EVUC	EMERGENCY VEHICLE UNIT CABLE
EVUD	EMERGENCY VEHICLE UNIT DETECTOR
FB	FLASHING BEACON
FBCA	FLASHING BEACON CONTROL ASSEMBLY
FBS	FLASHING BEACON WITH SLIP BASE
FO	FIBER OPTIC
G	EQUIPMENT GROUNDING CONDUCTOR
GB	GROUND BUS
GFCI	GROUND FAULT CIRCUIT INTERRUPTER
HAR	HIGHWAY ADVISORY RADIO
Hex	HEXAGONAL
HPS	HIGH PRESSURE SODIUM
IISNS	INTERNALLY ILLUMINATED STREET NAME SIGN
ISL	INDUCTION SIGN LIGHTING
LED	LIGHT EMITTING DIODE
LMA	LUMINAIRE MAST ARM
LPS	LOW PRESSURE SODIUM
Ltg	LIGHTING
Lum	LUMINAIRE
M	METERED
MAT	MAST ARM MOUNTING TOP ATTACHMENT
MAS	MAST ARM MOUNTING SIDE ATTACHMENT
M/M	MULTIPLE TO MULTIPLE TRANSFORMER
Mtg	MOUNTING
MV	MERCURY VAPOR LIGHTING FIXTURE
MVDS	MICROWAVE VEHICLE DETECTION SYSTEM
N	NEUTRAL (GROUNDED CONDUCTOR)
NB	NEUTRAL BUS
NC	NORMALLY CLOSE
NO	NORMALLY OPEN
P	CIRCUIT BREAKER'S POLE
PB	PULL BOX
PBA	PUSH BUTTON ASSEMBLY
PEC	PHOTOELECTRIC CONTROL
Ped	PEDESTRIAN
PEU	PHOTOELECTRIC UNIT
PT	CONDUIT WITH PULL TAPE
RE	RELOCATED EQUIPMENT
RM	RAMP METERING
RWIS	ROADSIDE WEATHER INFORMATION SYSTEM
SB	SLIP BASE
SIC	SIGNAL INTERCONNECT CABLE
Sig	SIGNAL
SMA	SIGNAL MAST ARM
SNS	STREET NAME SIGN
SP	SERVICE POINT
TDC	TELEPHONE DEMARCATION CABINET
TMS	TRAFFIC MONITORING STATION
TOS	TRAFFIC OPERATIONS SYSTEM
Veh	VEHICLE
VIVDS	VIDEO IMAGE VEHICLE DETECTION SYSTEM
WIM	WEIGH-IN-MOTION
Xfmr	TRANSFORMER

Dist	COUNTY	ROUTE	POST MILES TOTAL PROJECT	SHEET No.	TOTAL SHEETS
05	SLO	1	17.7/59.0	44	48

Theresa Gabriel
REGISTERED ELECTRICAL ENGINEER

Theresa Aziz Gabriel
No. E15129
Exp. 6-30-14
ELECTRICAL
REGISTERED PROFESSIONAL ENGINEER
STATE OF CALIFORNIA

July 19, 2013
PLANS APPROVAL DATE

THE STATE OF CALIFORNIA OR ITS OFFICERS OR AGENTS SHALL NOT BE RESPONSIBLE FOR THE ACCURACY OR COMPLETENESS OF SCANNED COPIES OF THIS PLAN SHEET.

TO ACCOMPANY PLANS DATED 6-8-15

SOFFIT AND WALL MOUNTED LUMINAIRES

- PENDANT, 70 W HPS UNLESS OTHERWISE SPECIFIED
- FLUSH, 70 W HPS UNLESS OTHERWISE SPECIFIED
- WALL SURFACE, 70 W HPS UNLESS OTHERWISE SPECIFIED
- EXISTING SOFFIT OR WALL LUMINAIRE TO REMAIN UNMODIFIED
- (M) EXISTING SOFFIT OR WALL LUMINAIRE TO BE MODIFIED AS SPECIFIED

NOTE:
Arrow indicates "street side" of luminaire.

COMMONLY USED SYMBOLS FOR UNITED STATES CUSTOMARY UNITS OF MEASUREMENT:

SYMBOL USED	DEFINITIONS
Ω	OHMS
min	MINUTE
s	SECOND
bps	BITS PER SECOND
Bps	BYTES PER SECOND
A	AMPERE
V	VOLT
V(dc)	VOLT (DIRECT CURRENT)
V(ac)	VOLT (ALTERNATING CURRENT)
FC	FOOT - CANDLE
W	WATTS
VA	VOLT-AMPERE
M	MEGA
k	KILO
m	MILLI
μ	MICRO
p	PICO
Hz	HERTZ

MISCELLANEOUS ELECTROLIERS

NEW	EXISTING	
		LUMINAIRE ON WOOD POLE
		NON-STANDARD ELECTROLIER (SEE PROJECT NOTES OR PROJECT PLANS)
		CITY ELECTROLIER
		ELECTROLIER FOUNDATION (FUTURE INSTALLATION)

NOTES:

1. HPS luminaires shall be 310 W HPS when installed on Type 21, 21D, 30, 31 and 32 Standards, unless otherwise specified. HPS luminaires shall be 200 W when installed on other type standards or poles, unless otherwise specified.
2. LED luminaires shall be 235 W when installed on Type 21, 21D, 30, 31 and 32 Standards, unless otherwise specified. LED luminaires shall be 165 W when installed on other type standards or poles, unless otherwise specified.
3. Luminaires shall be the cutoff type, ANSI Type III medium cutoff lighting distribution, unless otherwise specified.

STANDARD ELECTROLIER

NEW	EXISTING	STANDARD TYPE
		15
		15D
S	S	15 STRUCTURE
S	S	15D STRUCTURE
		21
		21D
		21 STRUCTURE
		21D STRUCTURE
		30
		31
		32

STATE OF CALIFORNIA
DEPARTMENT OF TRANSPORTATION

ELECTRICAL SYSTEMS (LEGEND AND ABBREVIATIONS)

NO SCALE

RSP ES-1A DATED JULY 19, 2013 SUPERSEDES STANDARD PLAN ES-1A DATED MAY 20, 2011 - PAGE 425 OF THE STANDARD PLANS BOOK DATED 2010.

REVISED STANDARD PLAN RSP ES-1A

2010 REVISED STANDARD PLAN RSP ES-1A

7-15-13

CONDUIT

NEW	EXISTING	
		LIGHTING CONDUIT, UNLESS OTHERWISE INDICATED OR NOTED
		TRAFFIC SIGNAL CONDUIT
C	c	COMMUNICATION CONDUIT
T	t	TELEPHONE CONDUIT
F	f	FIRE ALARM CONDUIT
FO	fo	FIBER OPTIC CONDUIT
		CONDUIT TERMINATION
R	r	CONDUIT RISER ATTACHED TO THE STRUCTURE OR SERVICE POLE

SERVICE EQUIPMENT

NEW	EXISTING	
OH	oh	OVERHEAD LINES
U	U	WOOD POLE, "U" INDICATES UTILITY OWNED
		POLE GUY WITH ANCHOR
		UTILITY TRANSFORMER - GROUND MOUNTED
III	III	SERVICE EQUIPMENT ENCLOSURE TYPE. DOOR INDICATES FRONT OF ENCLOSURE
T	t	TELEPHONE DEMARCATION CABINET

POLE-MOUNTED SERVICE DESIGNATION

TYPE H SERVICE, 28'-10" — TYPE OF INSTALLATION AND POLE HEIGHT ABOVE GRADE

FLASHING BEACON

NEW	EXISTING	
R	R	FLASHING BEACON (ONE VEHICLE SIGNAL HEAD WITH BACKPLATE AND VISOR) "R" INDICATES RED INDICATION, "Y" INDICATES YELLOW INDICATION
Y Y	Y Y	FLASHING BEACON WITH TYPE 15-FBS STANDARD AND A SIGN.
R R	R R	FLASHING BEACON WITH TYPES 9, 9A OR 9B SIGN UNLESS OTHERWISE SPECIFIED OR INDICATED

SIGNAL EQUIPMENT

NEW	EXISTING	
C	C	PEDESTRIAN SIGNAL HEAD "C" INDICATES COUNTDOWN PEDESTRIAN HEAD
		PUSH BUTTON ASSEMBLY POST
		PEDESTRIAN BARRICADE
		VEHICLE SIGNAL HEAD (WITH BACKPLATE AND 3-SECTIONS: RED, YELLOW AND GREEN)
		VEHICLE SIGNAL HEAD WITH ANGLE VISOR
PV	PV	MODIFICATIONS OF BASIC SYMBOL: "L" INDICATES ALL NON-ARROW SECTIONS LOUVERED "LG" INDICATES LOUVERED GREEN SECTION ONLY "PV" INDICATES ALL 12" SECTIONS PROGRAMMED VISIBILITY "8" INDICATES ALL 8" SECTIONS (ONLY WHEN SPECIFIED)
		VEHICLE SIGNAL HEAD CONSISTING OF RED, YELLOW AND GREEN LEFT ARROW SECTIONS
		VEHICLE SIGNAL HEAD CONSISTING OF RED AND YELLOW SECTIONS WITH AN UP GREEN ARROW SECTION
		VEHICLE SIGNAL HEAD (5 SECTION) CONSISTING OF RED, YELLOW AND GREEN SECTIONS WITH YELLOW AND GREEN RIGHT ARROW SECTIONS
		TYPE 15TS STANDARD WITH VEHICLE SIGNAL HEAD AND LUMINAIRE
		TYPE 21TS STANDARD WITH VEHICLE SIGNAL HEAD AND LUMINAIRE
		STANDARD WITH LUMINAIRE AND SIGNAL MAST ARMS AND ATTACHED VEHICLE SIGNAL HEADS
		TYPE 1 STANDARD WITH ATTACHED VEHICLE SIGNAL HEADS
		STANDARD WITH A SIGNAL MAST ARM, ATTACHED VEHICLE SIGNAL HEADS AND INTERNALLY ILLUMINATED STREET NAME SIGN
		CONTROLLER ASSEMBLY. DOOR INDICATES FRONT OF CABINET

Dist	COUNTY	ROUTE	POST MILES TOTAL PROJECT	SHEET No.	TOTAL SHEETS
05	SLO	1	17.7/59.0	45	48

Theresa Gabriel
REGISTERED ELECTRICAL ENGINEER

Theresa Aziz Gabriel No. E15129 Exp. 6-30-14 ELECTRICAL — REGISTERED PROFESSIONAL ENGINEER — STATE OF CALIFORNIA

July 19, 2013
PLANS APPROVAL DATE

THE STATE OF CALIFORNIA OR ITS OFFICERS OR AGENTS SHALL NOT BE RESPONSIBLE FOR THE ACCURACY OR COMPLETENESS OF SCANNED COPIES OF THIS PLAN SHEET.

TO ACCOMPANY PLANS DATED 6-8-15

SIGNAL EQUIPMENT Cont

NEW	EXISTING	
		GUARD POST
		TYPE 1 STANDARD WITH RAMP METERING SIGN
		OPTICAL DETECTOR FOR THE EMERGENCY VEHICLE DETECTION SYSTEM

NOTES:

1. All signal sections shall be 12" unless shown otherwise.
2. Signal heads shall be provided with backplates unless shown otherwise.

ILLUMINATED OVERHEAD SIGN

NEW	EXISTING	
		SINGLE POST, SINGLE ILLUMINATED SIGN, BALANCED BUTTERFLY
		SINGLE POST, DOUBLE ILLUMINATED SIGN, BALANCED BUTTERFLY
		SINGLE POST, SINGLE ILLUMINATED SIGN, FULL CANTILEVER
		DOUBLE POST, SINGLE ILLUMINATED SIGN
		SINGLE ILLUMINATED SIGN MOUNTED ON STRUCTURE
		DOUBLE POST, SINGLE ILLUMINATED SIGN WITH ELECTROLIER

STATE OF CALIFORNIA
DEPARTMENT OF TRANSPORTATION

ELECTRICAL SYSTEMS (LEGEND AND ABBREVIATIONS)

NO SCALE

RSP ES-1B DATED JULY 19, 2013 SUPERSEDES STANDARD PLAN ES-1B DATED MAY 20, 2011 - PAGE 426 OF THE STANDARD PLANS BOOK DATED 2010.

REVISED STANDARD PLAN RSP ES-1B

2010 REVISED STANDARD PLAN RSP ES-1B

7-15-13

Dist	COUNTY	ROUTE	POST MILES TOTAL PROJECT	SHEET No.	TOTAL SHEETS
05	SLO	1	17.7/59.0	46	48

Theresa Gabriel
REGISTERED ELECTRICAL ENGINEER

Theresa Aziz Gabriel No. E15129 Exp. 6-30-14 ELECTRICAL — REGISTERED PROFESSIONAL ENGINEER — STATE OF CALIFORNIA

July 19, 2013
PLANS APPROVAL DATE

THE STATE OF CALIFORNIA OR ITS OFFICERS OR AGENTS SHALL NOT BE RESPONSIBLE FOR THE ACCURACY OR COMPLETENESS OF SCANNED COPIES OF THIS PLAN SHEET.

TO ACCOMPANY PLANS DATED 6-8-15

EQUIPMENT IDENTIFICATION

ILLUMINATED SIGN IDENTIFICATION NUMBER:

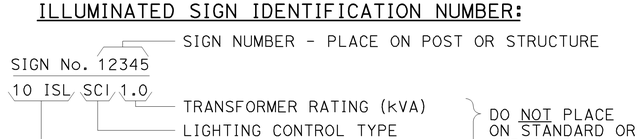

ELECTROLIER OR EQUIPMENT IDENTIFICATION NUMBER:

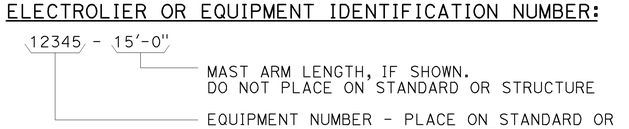

CONDUIT AND CONDUCTOR IDENTIFICATION:

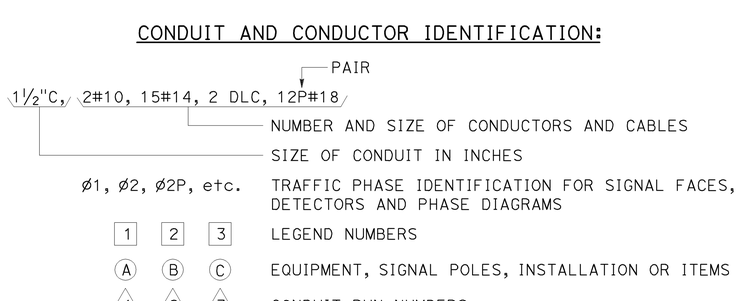

SIGNAL AND LIGHTING STANDARD (TYPICAL DESIGNATION):

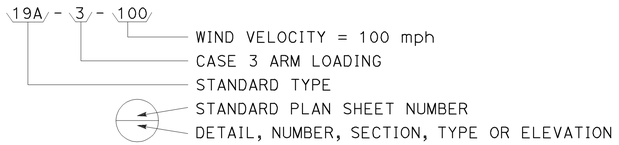

MISCELLANEOUS EQUIPMENT

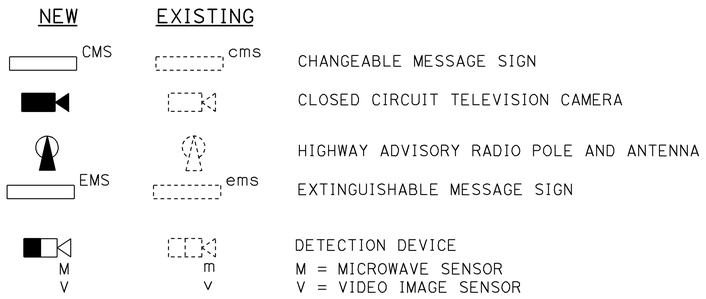

WIRING DIAGRAM LEGEND

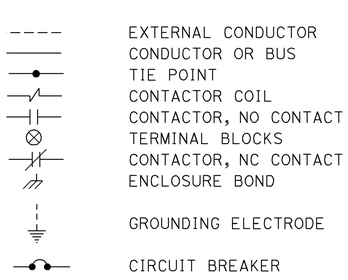

PULL BOXES

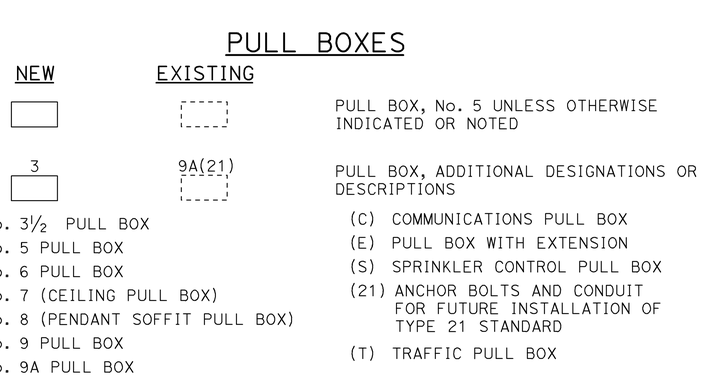

3 No. 3½ PULL BOX
5 No. 5 PULL BOX
6 No. 6 PULL BOX
7 No. 7 (CEILING PULL BOX)
8 No. 8 (PENDANT SOFFIT PULL BOX)
9 No. 9 PULL BOX
9A No. 9A PULL BOX

VEHICLE DETECTORS

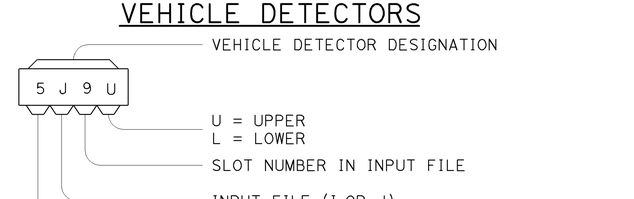

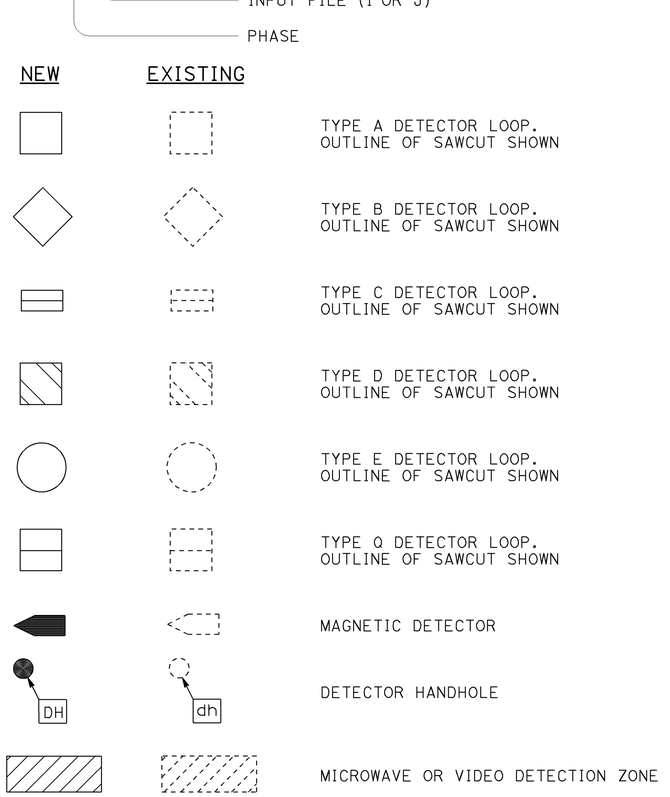

STATE OF CALIFORNIA
DEPARTMENT OF TRANSPORTATION

ELECTRICAL SYSTEMS (LEGEND AND ABBREVIATIONS)

NO SCALE

RSP ES-1C DATED JULY 19, 2013 SUPERSEDES STANDARD PLAN ES-1C DATED MAY 20, 2011 - PAGE 427 OF THE STANDARD PLANS BOOK DATED 2010.

REVISED STANDARD PLAN RSP ES-1C

2010 REVISED STANDARD PLAN RSP ES-1C

7-11-13

Dist	COUNTY	ROUTE	POST MILES TOTAL PROJECT	SHEET No.	TOTAL SHEETS
05	SLO	1	17.7/59.0	47	48

Theresa Gabriel
REGISTERED ELECTRICAL ENGINEER

July 19, 2013
PLANS APPROVAL DATE

REGISTERED PROFESSIONAL ENGINEER
Theresa Aziz Gabriel
No. E15129
Exp. 6-30-14
ELECTRICAL
STATE OF CALIFORNIA

THE STATE OF CALIFORNIA OR ITS OFFICERS OR AGENTS SHALL NOT BE RESPONSIBLE FOR THE ACCURACY OR COMPLETENESS OF SCANNED COPIES OF THIS PLAN SHEET.

TO ACCOMPANY PLANS DATED 6-8-15

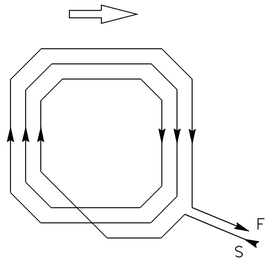

WINDING DETAIL

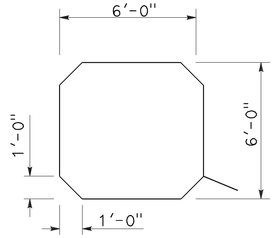

SAWCUT DETAIL

TYPE A LOOP DETECTOR CONFIGURATION

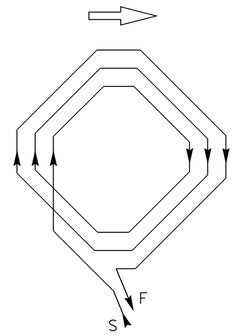

WINDING DETAIL

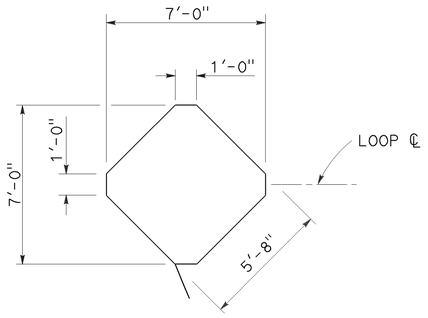

SAWCUT DETAIL

TYPE B LOOP DETECTOR CONFIGURATION

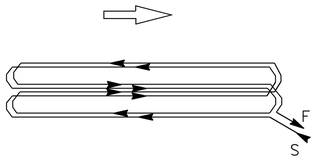

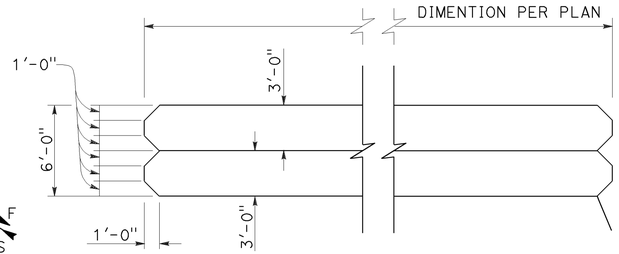

WINDING DETAIL SAWCUT DETAIL

TYPE C LOOP DETECTOR CONFIGURATION

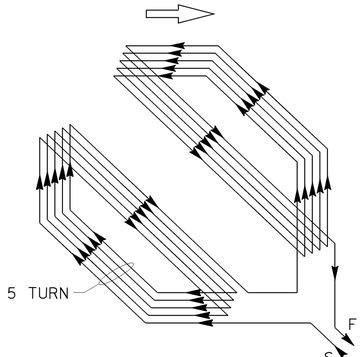

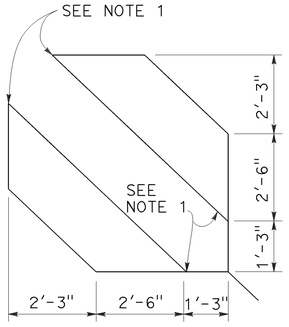

WINDING DETAIL SAWCUT DETAIL

TYPE D LOOP DETECTOR CONFIGURATION

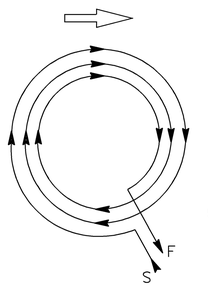

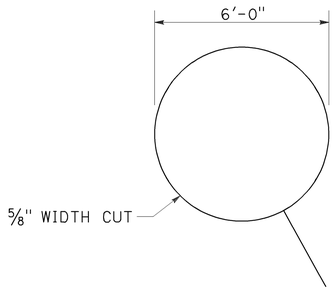

WINDING DETAIL SAWCUT DETAIL

TYPE E LOOP DETECTOR CONFIGURATION

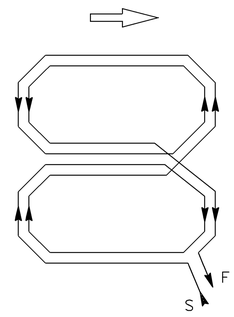

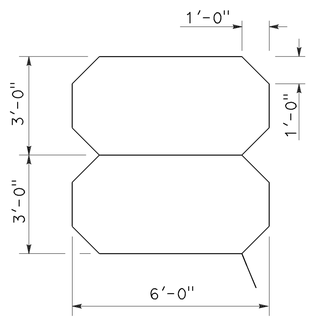

WINDING DETAIL SAWCUT DETAIL

TYPE Q LOOP DETECTOR CONFIGURATION

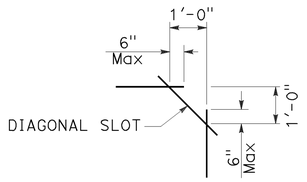

PLAN VIEW OF DIAGONAL SLOT AT CORNERS

NOTES:

1. Round corners of acute angle sawcuts to prevent damage to conductors.
2. Typical distance separating loops from edge to edge is 10' for Type A, B, D and E installation in single lane.

STATE OF CALIFORNIA
DEPARTMENT OF TRANSPORTATION

ELECTRICAL SYSTEMS (DETECTORS)

NO SCALE

RSP ES-5B DATED JULY 19, 2013 SUPERSEDES STANDARD PLAN ES-5B DATED MAY 20, 2011 - PAGE 449 OF THE STANDARD PLANS BOOK DATED 2010.

REVISED STANDARD PLAN RSP ES-5B

2010 REVISED STANDARD PLAN RSP ES-5B

7-9-13

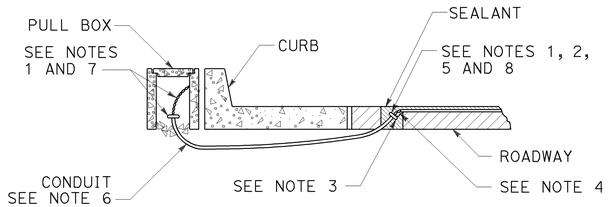

TYPE A

CURB TERMINATION DETAIL

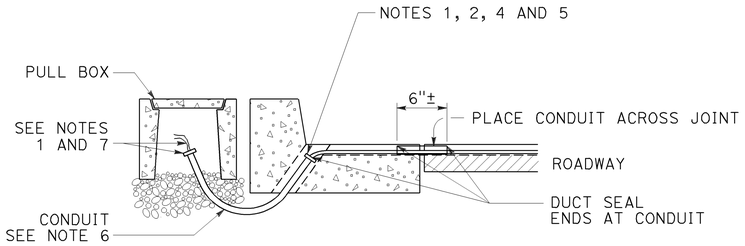

CROSS SECTION

PLAN VIEW

SECTION C-C

TYPE B

CURB TERMINATION DETAIL

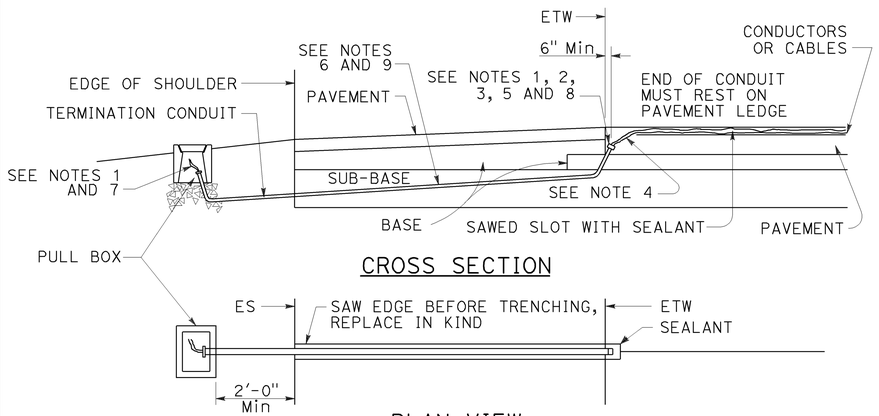

CROSS SECTION

PLAN VIEW

SHOULDER TERMINATION DETAILS

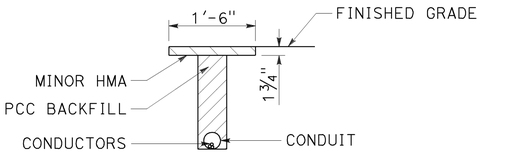

"T" TRENCH DETAIL T

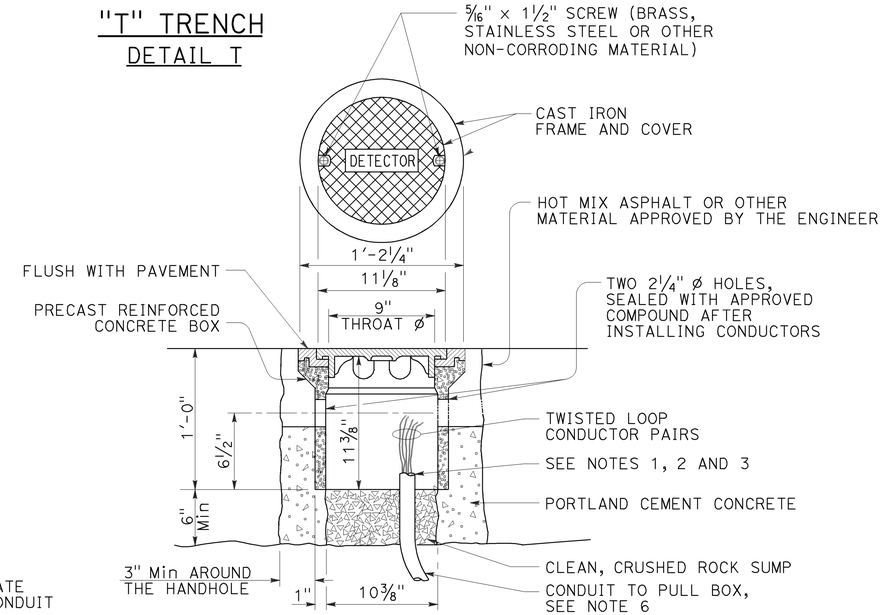

DETECTOR HANDHOLE DETAIL

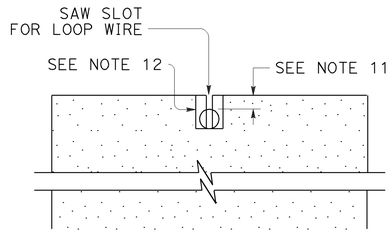

SECTION A-A

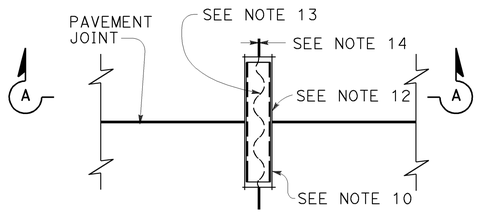

PLAN VIEW

TYPICAL LOOP LEAD-IN DETAIL AT PAVEMENT JOINT

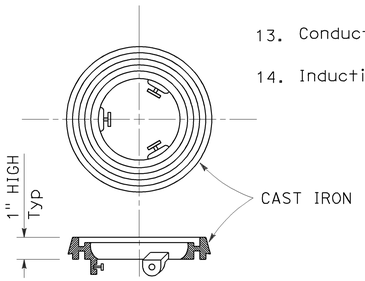

LOCKING GRADE RING

Dist	COUNTY	ROUTE	POST MILES TOTAL PROJECT	SHEET No.	TOTAL SHEETS
05	SLO	1	17.7/59.0	48	48

Theresa Gabriel
REGISTERED ELECTRICAL ENGINEER

July 19, 2013
PLANS APPROVAL DATE

Theresa Aziz Gabriel No. E15129 Exp. 6-30-14 ELECTRICAL — REGISTERED PROFESSIONAL ENGINEER — STATE OF CALIFORNIA

THE STATE OF CALIFORNIA OR ITS OFFICERS OR AGENTS SHALL NOT BE RESPONSIBLE FOR THE ACCURACY OR COMPLETENESS OF SCANNED COPIES OF THIS PLAN SHEET.

TO ACCOMPANY PLANS DATED 6-8-15

NOTES:

1. Bushing shall be used at end of conduit.
2. Tape detector conductors or cables 3" each side of bushings.
3. Install duct seal compound to each end of termination conduit before installing sealant.
4. Round all sharp edges where detector conductors or cables have to pass.
5. End of conduit shall be 3⅛" below roadway surface.
6.

Conduit size	Loop conductors
1"C minimum	1 to 2 pairs
1½"C minimum	3 to 4 pairs
2"C minimum	5 or more pairs

7. Splice detector conductors or cables to detector lead-in-cable.
8. Location of detector handhole when shown on plans.
9. When the shoulder and traveled way are paved with the same material and there is no joint between them, the conduit shall extend only 2'-0" into the shoulder pavement.
10. ¾"C, Type 3 conduit 6" long minimum, plug both ends with duct compound to keep out sealant.
11. ½" Minimum between top of conduit and pavement surface.
12. Sawcut shall not exceed 1" in width and ⅛" longer than conduit to be installed.
13. Conductors with ½" minimum slack inside conduit.
14. Inductive loop detector saw slot.

STATE OF CALIFORNIA
DEPARTMENT OF TRANSPORTATION

ELECTRICAL SYSTEMS (CURB TERMINATION AND HANDHOLE)

NO SCALE

RSP ES-5D DATED JULY 19, 2013 SUPERSEDES STANDARD PLAN ES-5D DATED MAY 20, 2011 - PAGE 451 OF THE STANDARD PLANS BOOK DATED 2010.

REVISED STANDARD PLAN RSP ES-5D

2010 REVISED STANDARD PLAN RSP ES-5D

7-9-13