Dist	COUNTY	ROUTE	POST MILES TOTAL PROJECT	SHEET No.	TOTAL SHEETS
05	SB	101,154,166, 192,217	Var	1	25

STATE OF CALIFORNIA

DEPARTMENT OF TRANSPORTATION

PROJECT PLANS FOR CONSTRUCTION ON

STATE HIGHWAY

IN SANTA BARBARA COUNTY AT VARIOUS LOCATIONS

TO BE SUPPLEMENTED BY STANDARD PLANS DATED 2010

INDEX OF PLANS

SHEET No.	DESCRIPTION
1	TITLE AND LOCATION MAP
2	CONSTRUCTION DETAILS
3	CONSTRUCTION AREA SIGNS
4	PAVEMENT DELINEATION QUANTITIES
5-7	TRAFFIC CONTROL SYSTEM
8-10	REVISED STANDARD PLANS
	STRUCTURE PLANS
11-18	GENERAL PLANS
19-24	JOINT SEAL DETAILS
25	MAXIMUM MOVEMENT RATING

THE STANDARD PLANS LIST APPLICABLE TO THIS CONTRACT IS INCLUDED IN THE NOTICE TO BIDDERS AND SPECIAL PROVISIONS BOOK.

LOCATIONS OF CONSTRUCTION

Loc	Co	ROUTE	PM	BRIDGE NAME	BRIDGE No.
1	SB	192	1.77	SAN ROQUE CANYON	51-0104
2	SB	101	20.06	TURNPIKE ROAD OC	51-0099
3	SB	101	20.95	MARIA YGNACIO CREEK	51-0162K
4	SB	217	2.67	E217-S101 CONNECTOR OH	51-0297G
5	SB	101	24.77	STORKE ROAD OC	51-0307
6	SB	101	54.71	NOJOQUI CREEK	51-0020R/L
7	SB	101	54.85	NOJOQUI CREEK	51-0074R/L
8	SB	101	55.66	NOJOQUI CREEK	51-0019L
9	SB	101	56.00	NOJOQUI CREEK	51-0018R/L
10	SB	154	0.50	ROUTE 154/101 SEPARATION	51-0329
11	SB	101	86.59	BETTERAVIA ROAD OC	51-0306
12	SB	101	89.13	ALVIN AVENUE OC	51-0040
13	SB	166	R30.37	CUYAMA RIVER	51-0218
14	SB	166	R34.95	CUYAMA RIVER	51-0041
15	SB	166	R69.94	CUYAMA RIVER	51-0066

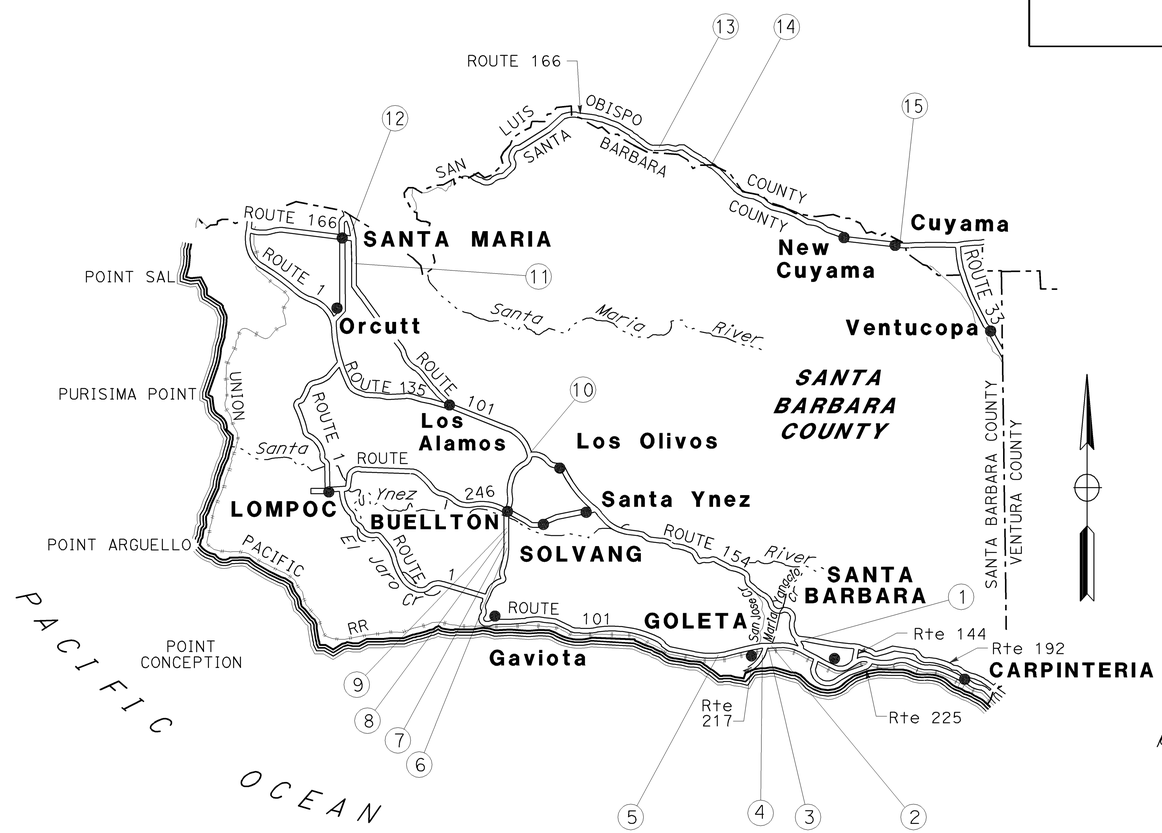

NO SCALE

THE CONTRACTOR SHALL POSSESS THE CLASS (OR CLASSES) OF LICENSE AS SPECIFIED IN THE "NOTICE TO BIDDERS."

PROJECT MANAGER KELLY J.McCLAIN

DESIGN ENGINEER KELLY J.McCLAIN

12-31-12

PROJECT ENGINEER DATE
REGISTERED CIVIL ENGINEER

December 31, 2012

PLANS APPROVAL DATE

REGISTERED PROFESSIONAL ENGINEER K.L.McKINLEY No. 49413 Exp. 9-30-14 CIVIL STATE OF CALIFORNIA

THE STATE OF CALIFORNIA OR ITS OFFICERS OR AGENTS SHALL NOT BE RESPONSIBLE FOR THE ACCURACY OR COMPLETENESS OF SCANNED COPIES OF THIS PLAN SHEET.

CONTRACT No.	05-1A7904
PROJECT ID	0512000023

LAST REVISION 11-27-12

DATE PLOTTED => 02-JAN-2013
TIME PLOTTED => 10:14

Dist	COUNTY	ROUTE	POST MILES TOTAL PROJECT	SHEET No.	TOTAL SHEETS
05	SB	101,154,166, 192,217	Var	2	25

REGISTERED CIVIL ENGINEER 12-31-12 DATE

12-31-12
PLANS APPROVAL DATE

REGISTERED PROFESSIONAL ENGINEER K.L.McKINLEY No. 49413 Exp. 9-30-14 CIVIL STATE OF CALIFORNIA

THE STATE OF CALIFORNIA OR ITS OFFICERS OR AGENTS SHALL NOT BE RESPONSIBLE FOR THE ACCURACY OR COMPLETENESS OF SCANNED COPIES OF THIS PLAN SHEET.

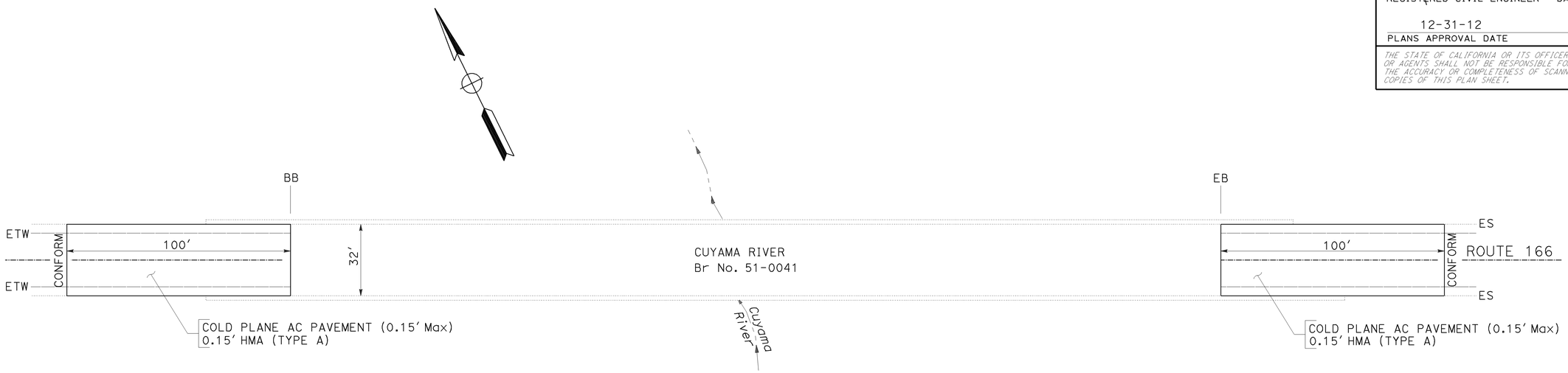

PLAN

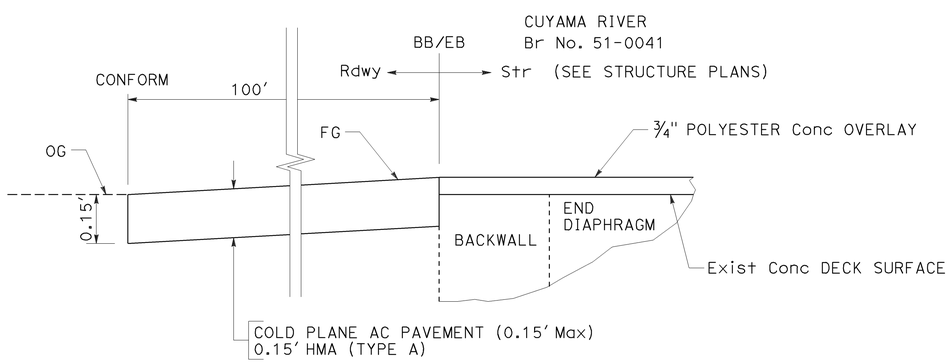

ELEVATION

PAVING QUANTITIES

COLD PLANE ASPHALT CONCRETE PAVEMENT	HOT MIX ASPHALT (TYPE A)	TACK COAT	COMMENTS
SQYD	TON	TON	
711	72	0.18	PAVEMENT TRANSITION TAPERS

PAVEMENT TRANSITION TAPER DETAIL

NO SCALE

CONSTRUCTION DETAILS

CUYAMA RIVER Br No. 51-0041
(LOCATION 14)

C-1

STATE OF CALIFORNIA - DEPARTMENT OF TRANSPORTATION
Caltrans MAINTENANCE DESIGN

FUNCTIONAL SUPERVISOR: KELLY J.McCLAIN
CALCULATED-DESIGNED BY: KELLY L.McKINLEY
CHECKED BY: KELLY J.McCLAIN
REVISED BY
DATE REVISED

LAST REVISION 11-27-12
DATE PLOTTED => 02-JAN-2013
TIME PLOTTED => 10:14

Dist	COUNTY	ROUTE	POST MILES TOTAL PROJECT	SHEET No.	TOTAL SHEETS
05	SB	101,154,166, 192,217	Var	3	25

REGISTERED CIVIL ENGINEER DATE 12-31-12

PLANS APPROVAL DATE 12-31-12

REGISTERED PROFESSIONAL ENGINEER K.L.McKINLEY No. 49413 Exp. 9-30-14 CIVIL STATE OF CALIFORNIA

THE STATE OF CALIFORNIA OR ITS OFFICERS OR AGENTS SHALL NOT BE RESPONSIBLE FOR THE ACCURACY OR COMPLETENESS OF SCANNED COPIES OF THIS PLAN SHEET.

NOTES:

1. EXACT LOCATION OF CONSTRUCTION AREA SIGNS TO BE DETERMINED BY THE ENGINEER.
2. EXISTING UTILITY FACILITIES HAVE NOT BEEN PLOTTED ON THESE PLANS.
3. R9-10 TO BE USED WHEN EXISTING STRUCTURE HAS TWO SIDEWALKS.
4. SPECIAL SIGN "D" TO BE USED WHEN EXISTING STRUCTURE HAS ONE SIDEWALK.
5. TO BE USED ONLY WHEN WORK IS IN PROGRESS AND WITHIN 6 ft OF SW.

LEGEND:

CONSTRUCTION AREA SIGN

TYPE II BARRICADE

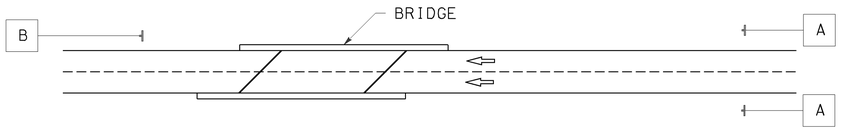

LOCATION 3, 6, 9

Loc	Co	ROUTE	PM	NAME OF BRIDGE	BRIDGE No.	SIGN A	SIGN B
3	SB	101	20.95	MARIA YGNACIO CREEK	51-0162K	2	1
6	SB	101	54.71	NOJOQUI CREEK	51-0020L	-	1
6	SB	101	54.71	NOJOQUI CREEK	51-0020R	2	-
9	SB	101	56.00	NOJOQUI CREEK	51-0018L	2	-
9	SB	101	56.00	NOJOQUI CREEK	51-0018R	-	1
SUBTOTAL						6	3

BLACK LETTERS ON WHITE BACKGROUND
MOUNT PANEL ON TYPE II BARRICADE

SPECIAL SIGN "D"

CONSTRUCTION AREA SIGNS (SUMMARY)

SIGN	CODE	MESSAGE	PANEL SIZE	No. OF SIGNS	No. OF POSTS AND SIZE	COMMENTS
A	W20-1	ROAD WORK AHEAD	48" x 48"	34	1 - 4" x 6"	STATIONARY MOUNTED
B	G20-2	END ROAD WORK	48" x 24"	31	1 - 4" x 6"	STATIONARY MOUNTED
C	R9-10	SIDEWALK CLOSED USE OTHER SIDE	24" x 24"	12	-	BARRICADE MOUNTED NOTES 3, 5
D	"D"	SIDEWALK CLOSED PEDESTRIANS PROHIBITED	24" x 24"	4	-	
E	W20-1	ROAD WORK AHEAD	36" x 36"	6	1 - 4" x 4"	STATIONARY MOUNTED
F	G20-2	END ROAD WORK	36" x 18"	6	1 - 4" x 4"	STATIONARY MOUNTED

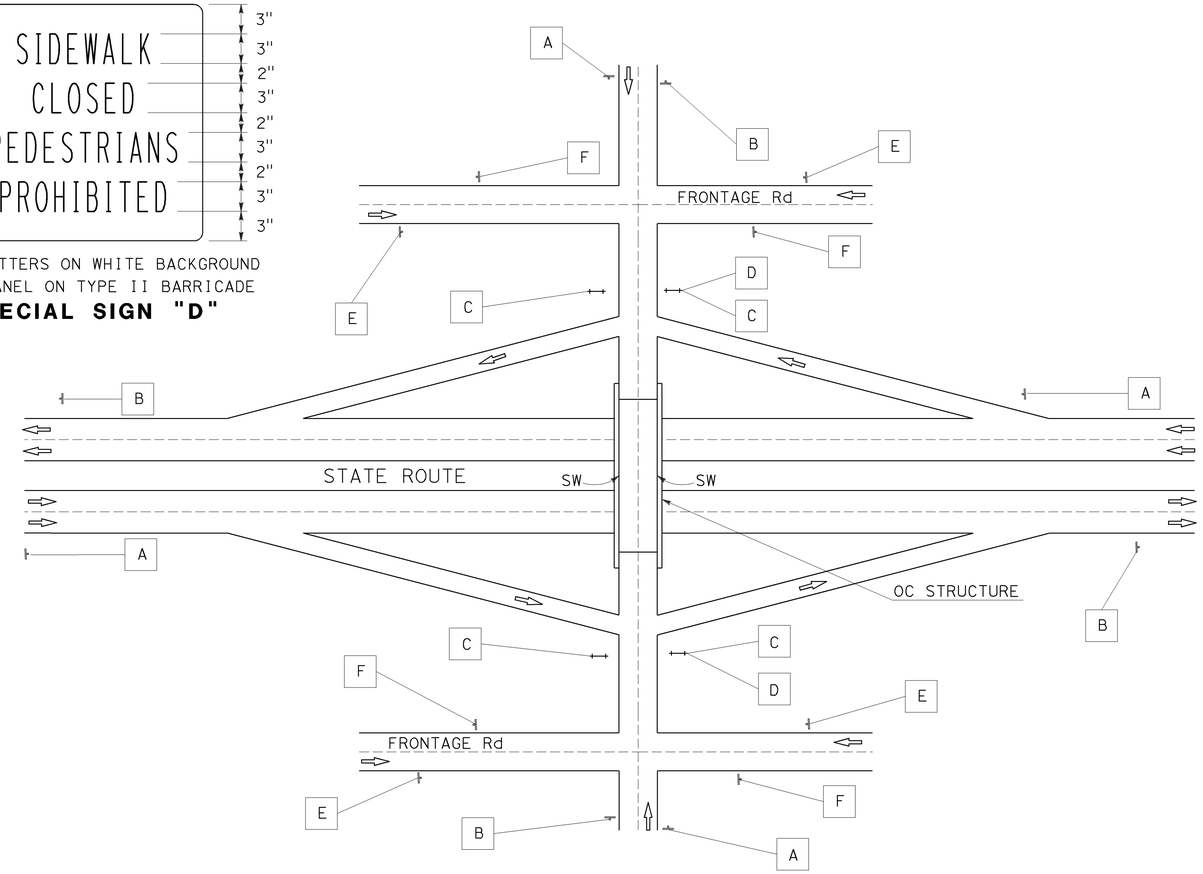

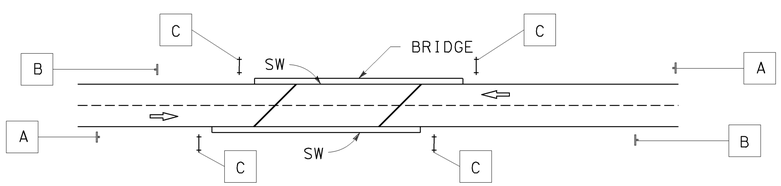

LOCATION 1, 4, 12, 13, 14, 15

Loc	Co	ROUTE	PM	NAME OF BRIDGE	BRIDGE No.	SIGN A	SIGN B	SIGN C
1	SB	192	1.77	SAN ROQUE CANYON	51-0104	2	2	4
4	SB	217	2.67	E217-S101 Conn OH	51-0297G	2	2	-
12	SB	101	89.13	ALVIN Ave OC	51-0040	2	2	4
13	SB	166	R30.37	CUYAMA RIVER	51-0218	2	2	-
14	SB	166	R34.95	CUYAMA RIVER	51-0041	2	2	-
15	SB	166	R69.94	CUYAMA RIVER	51-0066	2	2	-
SUBTOTAL						12	12	8

LOCATION 2, 5, 10, 11

Loc	Co	ROUTE	PM	NAME OF BRIDGE	BRIDGE No.	SIGN A	SIGN B	SIGN C	SIGN D	SIGN E	SIGN F	COMMENTS
2	SB	101	20.06	TURNPIKE Rd OC	51-0099	4	4	4	-	2	2	FRONTAGE Rd: CALLE REAL
5	SB	101	24.77	STORKE Rd OC	51-0307	4	4	-	2	2	2	FRONTAGE Rd: CALLE REAL
10	SB	154	0.50	Rte 154/101 Sep	51-0329	4	4	-	-	-	-	NO FRONTAGE Rd SIGNAGE
11	SB	101	86.59	BETTERAVIA Rd OC	51-0306	4	4	-	2	2	2	S BRADLEY Rd, BRADLEY Rd, NICHOLSON Ave
SUBTOTAL						16	16	4	4	6	6	

APPROVED FOR CONSTRUCTION AREA SIGN WORK ONLY

CONSTRUCTION AREA SIGNS

NO SCALE

CS-1

STATE OF CALIFORNIA - DEPARTMENT OF TRANSPORTATION
Caltrans® MAINTENANCE DESIGN

FUNCTIONAL SUPERVISOR: KELLY J.McCLAIN
CALCULATED-DESIGNED BY: KELLY L.McKINLEY
CHECKED BY: KELLY J.McCLAIN
REVISED BY
DATE REVISED

LAST REVISION 11-27-12
DATE PLOTTED => 02-JAN-2013
TIME PLOTTED => 10:14

Dist	COUNTY	ROUTE	POST MILES TOTAL PROJECT	SHEET No.	TOTAL SHEETS
05	SB	101,154,166, 192,217	Var	4	25

REGISTERED CIVIL ENGINEER 12-31-12 DATE

12-31-12
PLANS APPROVAL DATE

REGISTERED PROFESSIONAL ENGINEER K.L.McKINLEY No. 49413 Exp. 9-30-14 CIVIL STATE OF CALIFORNIA

THE STATE OF CALIFORNIA OR ITS OFFICERS OR AGENTS SHALL NOT BE RESPONSIBLE FOR THE ACCURACY OR COMPLETENESS OF SCANNED COPIES OF THIS PLAN SHEET.

NOTE:

NO PAVEMENT DELINEATION WORK AT LOCATIONS 6 - 9, 13 AND 15.

LEGEND:

BLS - BIKE LANE SYMBOL WITH PERSON

REMOVE PAVEMENT DELINEATION

Loc	Co ROUTE PM	NAME OF BRIDGE	BRIDGE No.	REMOVE YELLOW THERMOPLASTIC TRAFFIC STRIPE (HAZARDOUS WASTE)		REMOVE THERMOPLASTIC TRAFFIC STRIPE		REMOVE TRAFFIC STRIPE*		REMOVE PAVEMENT MARKER (N)	REMOVE THERMOPLASTIC PAVEMENT MARKING
				DETAIL	LF	DETAIL	LF	DETAIL	LF	EA	SQFT
1	SB-192-1.77	SAN ROQUE CANYON	51-0104	22	978	27B	978	22	489	80	
2	SB-101-20.06	TURNPIKE Rd OC	51-0099	22	490	8, 28, 39	1,838	22	245	29	313
3	SB-101-20.95	MARIA YGNACIO CREEK	51-0162K	25	162	27B	162			4	
4	SB-217-2.67	E217-S101 CONNECTOR OH	51-0297G	22	482	9, 27B, 38	603			72	
5	SB-101-24.77	STORKE Rd OC	51-0307	25	440	11, 27B	2,548	25	220	62	116
10	SB-154-0.50	Rte 154/101 SEPARATION	51-0329	22	426	27B	426	22	213	19	
11	SB-101-86.59	BETTERAVIA Rd OC	51-0306	22	394	27B	1,379	22	197	122	90
12	SB-101-89.13	ALVIN Ave	51-0040	22	612	9	178	22		41	
14	SB-166-R34.95	CUYAMA RIVER	51-0041	6, 16	171	27B	1,248	16	48	14	
TOTAL					4,155		9,360		1,412		519

(N) - NOT A SEPARATE PAY ITEM, FOR INFORMATION ONLY
* - BLACK PAINT

PAVEMENT DELINEATION

Loc	Co ROUTE PM	NAME OF BRIDGE	BRIDGE No.	THERMOPLASTIC TRAFFIC STRIPE (SPRAYABLE)											PAVEMENT MARKER					THERMOPLASTIC PAVEMENT MARKING								
				YELLOW					WHITE						(NON-REFLECTIVE)	(RETROREFLECTIVE)				ARROWS TYPE			WORDS & SYMBOLS					
				DETAIL											DETAILS 10,13	DETAILS 6,9,10,13,14A,16,21,22,25,38												
				6	16	21	22	25	14A	9	11	27B	38	39	TYPE A	TYPE C	TYPE D	TYPE G	TYPE H	IV (L)	V	BIKE	BIKE	LANE	BLS	NO	RIGHT	TURN
				LF											EA	EA				SQFT								
1	SB-192-1.77	SAN ROQUE CANYON	51-0104				489					978					44											
2	SB-101-20.06	TURNPIKE Rd OC	51-0099			245			490				490	490		11		22		90	66	7	10	12		28	52	48
3	SB-101-20.95	MARIA YGNACIO CREEK	51-0162K					162				162							4									
4	SB-217-2.67	E217-S101 CONNECTOR OH	51-0297G					482			482	482			40			11	11									
5	SB-101-24.77	STORKE Rd OC	51-0307				220			440			660	440			20	40		105		7	5	6	7			
10	SB-154-0.50	Rte 154/101 SEPARATION	51-0329				212					425					20											
11	SB-101-86.59	BETTERAVIA Rd OC	51-0306				197						394	394	74		18	32		90								
12	SB-101-89.13	ALVIN Ave	51-0040				306			612							28	14										
14	SB-166-R34.95	CUYAMA RIVER	51-0041	368	48							832					11		4									
SUBTOTAL				368	48	245	1,424	644	490	1,052	482	2,879	1,544	1,324		11	148	119	19	285	66	14	15	18	7	28	52	48
TOTAL				10,500											114	297				533								

PAVEMENT DELINEATION QUANTITIES
PDQ-1

STATE OF CALIFORNIA - DEPARTMENT OF TRANSPORTATION
Caltrans® MAINTENANCE DESIGN

FUNCTIONAL SUPERVISOR: KELLY J.McCLAIN
CALCULATED-DESIGNED BY: KELLY L.McKINLEY
CHECKED BY: KELLY J.McCLAIN
REVISED BY / DATE REVISED

LAST REVISION 11-27-12
DATE PLOTTED => 02-JAN-2013
TIME PLOTTED => 10:14

Dist	COUNTY	ROUTE	POST MILES TOTAL PROJECT	SHEET No.	TOTAL SHEETS
05	SB	101,154,166, 192,217	Var	5	25

REGISTERED CIVIL ENGINEER 12-7-12 DATE

12-31-12
PLANS APPROVAL DATE

REGISTERED PROFESSIONAL ENGINEER Gurinderpal Bhullar No. C48815 Exp. 9-30-14 CIVIL STATE OF CALIFORNIA

THE STATE OF CALIFORNIA OR ITS OFFICERS OR AGENTS SHALL NOT BE RESPONSIBLE FOR THE ACCURACY OR COMPLETENESS OF SCANNED COPIES OF THIS PLAN SHEET.

TYPICAL LANE CLOSURE

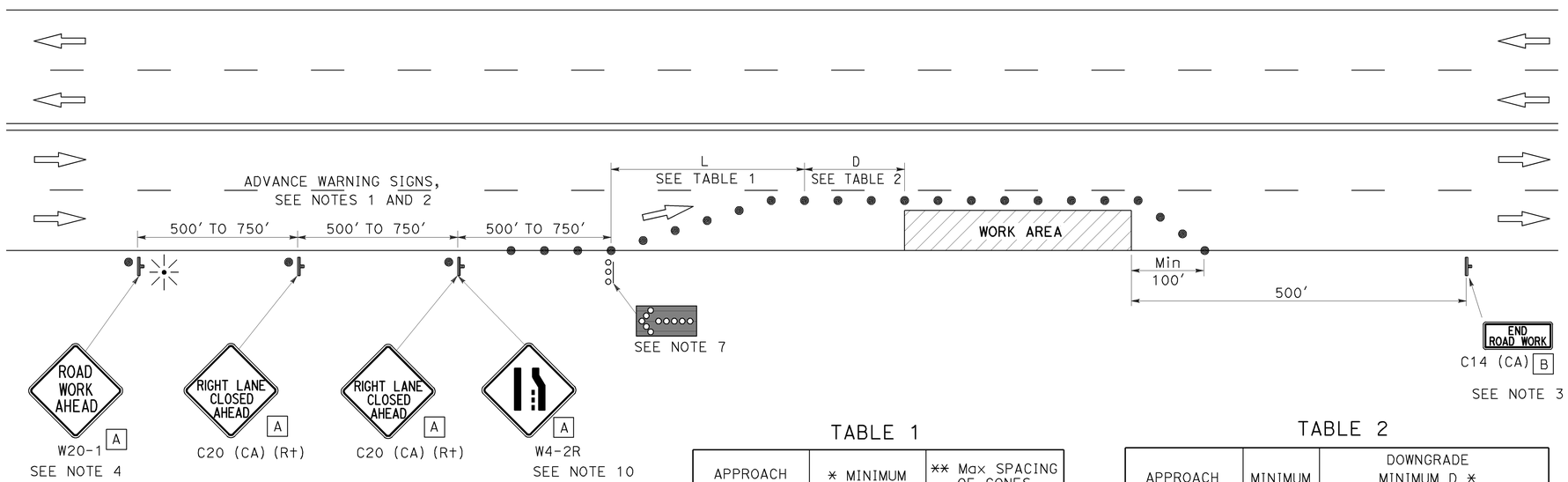

NOTES:

Unless otherwise specified in the special provisions, all temporary warning signs shall have black legend on orange background.

California code are designated by (CA). Otherwise, Federal (MUTCD) codes are shown.

LEGEND

- TRAFFIC CONE
- TEMPORARY SIGN
- FLASHING ARROW SIGN (FAS)
- FAS SUPPORT OR TRAILER
- PORTABLE FLASHING BEACON

SIGN PANEL SIZE (Min)

A 36" x 36"

B 36" x 18"

TABLE 1

APPROACH SPEED	* MINIMUM L	** Max SPACING OF CONES ALONG TAPER
mph	ft	ft
20 AND BELOW	80	20
25	125	25
30	180	30
35	245	35
40	320	40
45	540	45
50	600	50
Over 50	SEE NOTE 9	

* USE L FOR LANE WIDTHS LESS THAN OR EQUAL TO 12'.
** SEE NOTE 8.

TABLE 2

APPROACH SPEED	MINIMUM D	DOWNGRADE MINIMUM D *		
		-3%	-6%	-9%
mph	ft	ft	ft	ft
25 AND BELOW	155	158	165	173
30	200	205	215	227
35	250	257	271	287
40	305	315	333	354
45	360	378	400	427
50	425	446	474	507
OVER 50	SEE NOTE 9			

* USE ON SUSTAINED DOWNGRADE STEEPER THAN -3 PERCENT AND LONGER THAN 1 MILE.

NOTES:

1. Where approach speeds are low, advance warning signs may be placed at 300' spacing and placed closer in urban areas.
2. Each advance warning sign shall be equipped with at least two flags for daytime closure. Each flag shall be at least 16" x 16" in size and shall be orange or fluorescent red-orange in color. Flashing beacons shall be placed at the locations indicated for lane closure during hours of darkness.
3. A C14 (CA) "END ROAD WORK" sign, as appropriate, shall be placed at the end of the lane closure unless the end of work area is obvious, or ends within a larger project's limits.
4. If the W20-1 sign would follow within 2000' of a stationary W20-1 or C11 (CA) "ROAD WORK NEXT _____ MILES", use a C20 (CA) sign for the first advance warning sign.
5. All cones used for lane closures during the hours of darkness shall be fitted with retroreflective bands (or sleeves) as specified in the specifications.
6. Portable delineators, placed at one-half the spacing indicated for traffic cones, may be used instead of cones for daytime closures only.
7. Flashing arrow sign shall be either Type I or Type II.
8. The maximum spacing between cones along a tangent shall be 50' and along a taper shall be approximately as shown in Table 1.
9. For approach speeds over 50 mph, use the "Traffic Control System for Lane Closure On Freeways And Expressways" plan for lane closure details and requirements.
10. When specified in the special provisions, a W4-2 "LANE ENDS" symbol sign is to be used in place of the C20 (CA) "RIGHT LANE CLOSED AHEAD" sign.

STATE OF CALIFORNIA
DEPARTMENT OF TRANSPORTATION

TRAFFIC CONTROL SYSTEM FOR LANE CLOSURE ON MULTILANE CONVENTIONAL HIGHWAYS

NO SCALE

TCS-1

STATE OF CALIFORNIA - DEPARTMENT OF TRANSPORTATION

Caltrans

FUNCTIONAL SUPERVISOR

CALCULATED-DESIGNED BY | CHECKED BY

REVISED BY | DATE REVISED

LAST REVISION 12-28-12 | DATE PLOTTED => 10-DEC-2012 | TIME PLOTTED => 09:45

Dist	COUNTY	ROUTE	POST MILES TOTAL PROJECT	SHEET No.	TOTAL SHEETS
05	SB	101,154,166, 192,217	Var	6	25

REGISTERED CIVIL ENGINEER 12-7-12 DATE

12-31-12
PLANS APPROVAL DATE

REGISTERED PROFESSIONAL ENGINEER Gurinderpal Bhullar No. C48815 Exp. 9-30-14 CIVIL STATE OF CALIFORNIA

THE STATE OF CALIFORNIA OR ITS OFFICERS OR AGENTS SHALL NOT BE RESPONSIBLE FOR THE ACCURACY OR COMPLETENESS OF SCANNED COPIES OF THIS PLAN SHEET.

NOTES:

Unless otherwise specified in the special provisions, all temporary warning signs shall have black legend on orange background.

California code are designated by (CA). Otherwise, Federal (MUTCD) codes are shown.

TYPICAL LANE CLOSURE WITH REVERSIBLE CONTROL

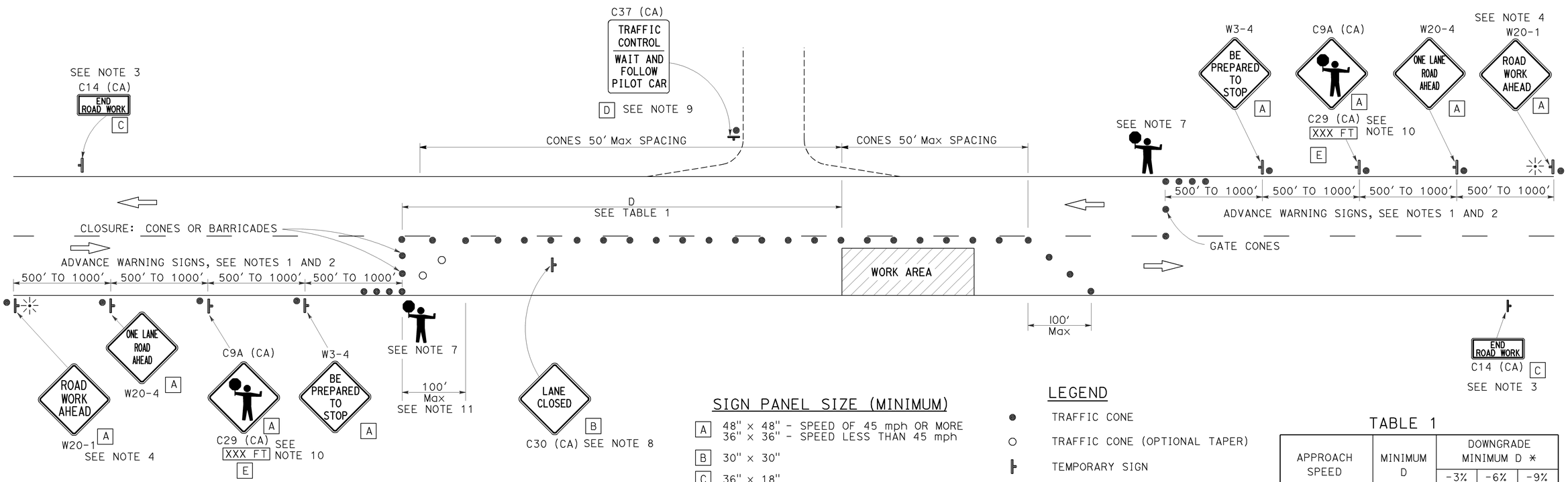

SIGN PANEL SIZE (MINIMUM)

A	48" x 48" - SPEED OF 45 mph OR MORE 36" x 36" - SPEED LESS THAN 45 mph
B	30" x 30"
C	36" x 18"
D	36" x 42"
E	36" x 9"

LEGEND

- ● TRAFFIC CONE
- ○ TRAFFIC CONE (OPTIONAL TAPER)
- TEMPORARY SIGN
- PORTABLE FLASHING BEACON
- FLAGGER

TABLE 1

APPROACH SPEED	MINIMUM D	DOWNGRADE MINIMUM D *		
		-3%	-6%	-9%
mph	ft	ft	ft	ft
25 AND BELOW	155	158	165	173
30	200	205	215	227
35	250	257	271	287
40	305	315	333	354
45	360	378	400	427
50	425	446	474	507
55	495	520	553	593
60	570	598	638	686
65	645	682	728	785

* USE ON SUSTAINED DOWNGRADE STEEPER THAN -3 PERCENT AND LONGER THAN 1 MILE.

NOTES:

1. Where approach speeds are low, advance warning signs may be placed at 300' spacing, and closer in urban areas.
2. Each advance warning sign in each direction of travel shall be equipped with at least two flags for daytime closure. Each flag shall be at least 16" x 16" in size and shall be orange or fluorescent red-orange in color. Flashing beacons shall be placed at the locations indicated for lane closure during hours of darkness.
3. A C14 (CA) "END ROAD WORK" sign, as appropriate, shall be placed at the end of the lane control unless the end of work area is obvious, or ends within a larger project's limits.
4. If the W20-1 sign would follow within 2000' of a stationary W20-1 or C11 (CA) "ROAD WORK NEXT _____MILES", use a W20-4 sign for the first advance warning sign.
5. All cones used for lane closures during the hours of darkness shall be fitted with retroreflective bands (or sleeves) as specified in the specifications.
6. Portable delineators, placed at one-half the spacing indicated for traffic cones, may be used instead of cones for daytime closures only.
7. Additional advance flaggers may be required. Flagger should stand in a conspicuous place, be visible to approaching traffic as well as approaching vehicles after the first vehicle has stopped. During the hours of darkness, the flagging-station and flagger shall be illuminated and clearly visible to approaching traffic. The illumination footprint of the lighting on the ground shall be at least 20' in diameter. Place a minimum of four cones at 50' intervals in advance of flagger station as shown.
8. Place C30 (CA) "LANE CLOSED" sign at 500' to 1000' intervals throughout extended work areas. They are optional if the work area is visible from the flagger station.
9. When a pilot car is used, place a C37 (CA) "TRAFFIC CONTROL-WAIT AND FOLLOW PILOT CAR" sign at all intersections within traffic control area. Signs shall be clean and visible at all times.
10. An optional C29 (CA) sign may be placed below the C9A (CA) sign.
11. Traffic cones or barricades may be placed on the optional taper as shown, barricades shall be Type I, II, or III.

STATE OF CALIFORNIA
DEPARTMENT OF TRANSPORTATION

TRAFFIC CONTROL SYSTEM FOR LANE CLOSURE ON TWO LANE CONVENTIONAL HIGHWAYS

NO SCALE

TCS-2

STATE OF CALIFORNIA - DEPARTMENT OF TRANSPORTATION

FUNCTIONAL SUPERVISOR | CALCULATED-DESIGNED BY | CHECKED BY | REVISED BY | DATE REVISED

LAST REVISION 12-28-12 | DATE PLOTTED => 10-DEC-2012 | TIME PLOTTED => 09:45

Dist	COUNTY	ROUTE	POST MILES TOTAL PROJECT	SHEET No.	TOTAL SHEETS
05	SB	101,154,166, 192,217	Var	7	25

REGISTERED CIVIL ENGINEER 12-7-12 DATE

12-31-12
PLANS APPROVAL DATE

REGISTERED PROFESSIONAL ENGINEER Gurinderpal Bhullar No. C48815 Exp. 9-30-14 CIVIL STATE OF CALIFORNIA

THE STATE OF CALIFORNIA OR ITS OFFICERS OR AGENTS SHALL NOT BE RESPONSIBLE FOR THE ACCURACY OR COMPLETENESS OF SCANNED COPIES OF THIS PLAN SHEET.

TYPICAL RAMP CLOSURES

SIGN PANEL SIZE (Min)

- A 48" x 48"
- B 48" x 30"
- C 30" x 30"
- D 48" x 48" - SPEED OF 50 mph OR MORE
  36" x 36" - SPEED LESS THAN 50 mph
- E 48" x 36"

LEGEND

- TRAFFIC CONE
- TEMPORARY SIGN
- BARRICADES

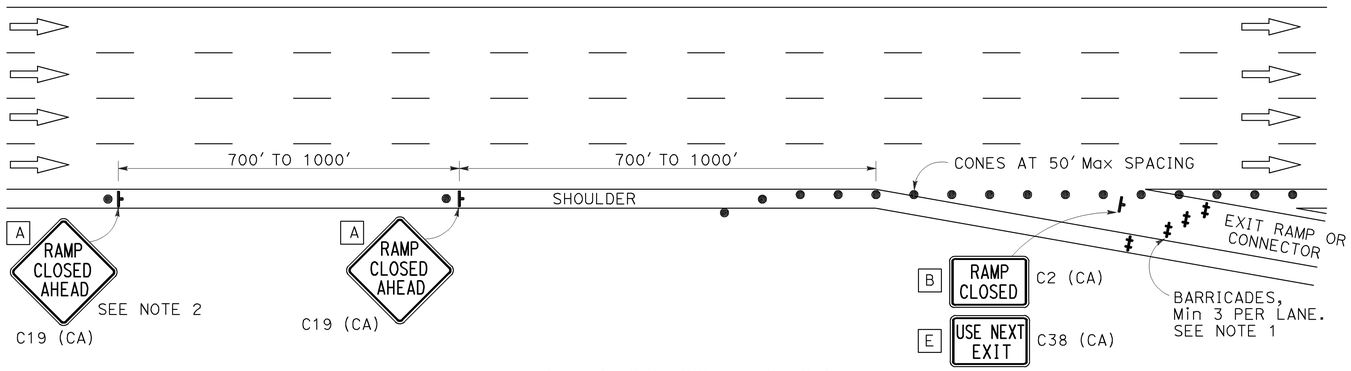

EXIT RAMP OR CONNECTOR

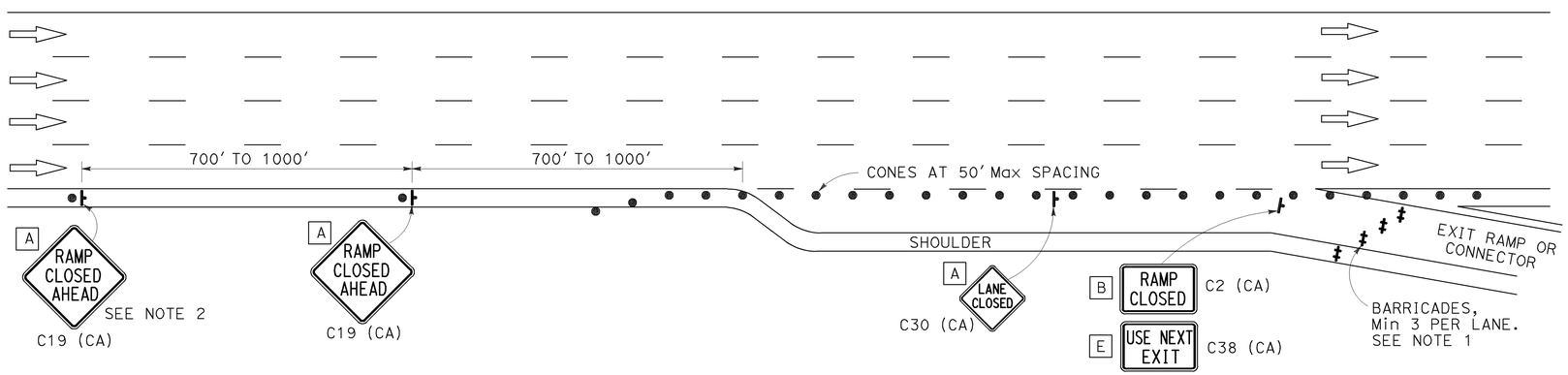

EXIT RAMP OR CONNECTOR WITH ADDITIONAL LANE

NOTES:

1. Barricades shall be Type I, II, or III for closures lasting one week or less and Type III for closures lasting longer than one week.
2. In addition to placing the C19 (CA) "RAMP CLOSED AHEAD" and C30 (CA) "RAMP CLOSED" signs, black on orange overlay plates with the word "CLOSED" may be mounted, as directed by the Engineer, on all guide signs that refer to the closed ramp. The letter size on the overlay shall be the same as the guide sign.
3. Each advance C19 (CA) "RAMP CLOSED AHEAD" sign shall be equipped with at least two flags for daytime closure. Each flag shall be at least 16" x 16" in size and shall be orange or fluorescent red-orange in color.
4. All cones used for ramp closures during the hours of darkness shall be fitted with retroreflective bands (or sleeves) as specified in the specifications.
5. Portable delineators, placed at one-half the spacing indicated for traffic cones, may be used instead of cones for daytime ramp closures only.
6. At least one person shall be assigned to provide full time maintenance of traffic control devices, unless otherwise directed by the Engineer.
7. The existing "EXIT" sign in the gore area shall be covered during ramp closures.

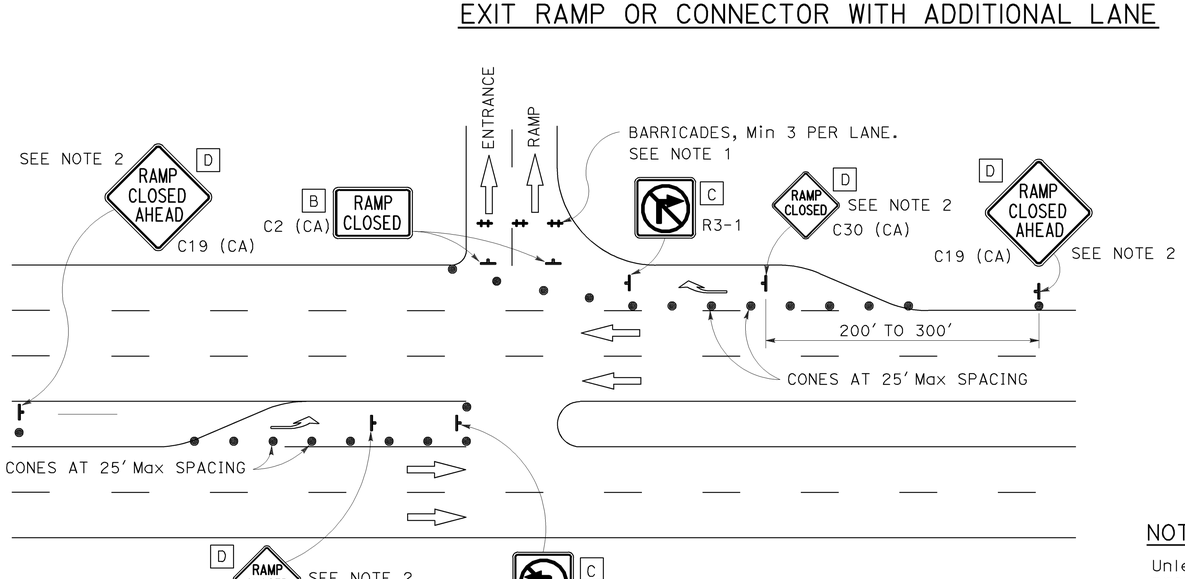

ENTRANCE RAMP WITH TURNING POCKETS

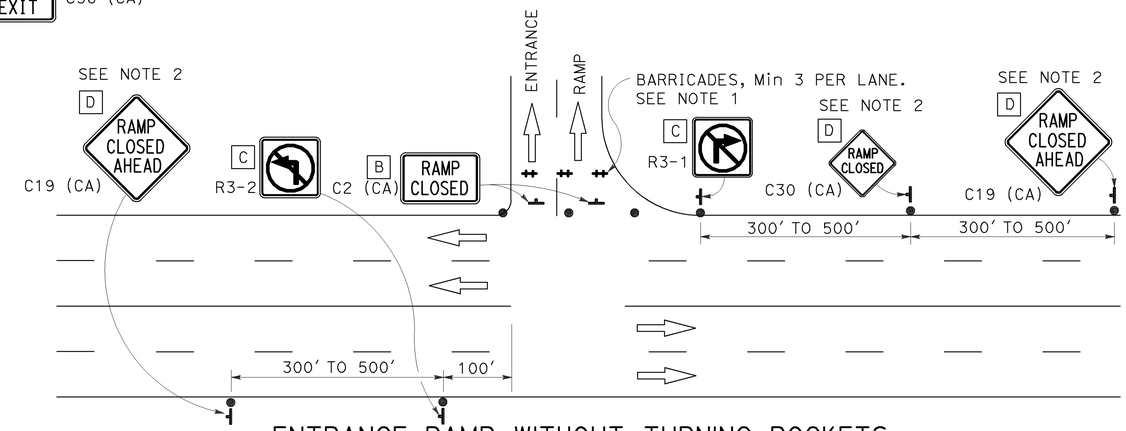

ENTRANCE RAMP WITHOUT TURNING POCKETS

NOTES:

Unless otherwise specified in the special provisions, all temporary warning signs shall have black legend on orange background.

California code are designated by (CA). Otherwise, Federal (MUTCD) codes are shown.

STATE OF CALIFORNIA
DEPARTMENT OF TRANSPORTATION

TRAFFIC CONTROL SYSTEM FOR RAMP CLOSURE

NO SCALE

TCS-3

STATE OF CALIFORNIA - DEPARTMENT OF TRANSPORTATION

Caltrans

FUNCTIONAL SUPERVISOR | CALCULATED-DESIGNED BY | CHECKED BY | REVISED BY | DATE REVISED

LAST REVISION 12-28-12 | DATE PLOTTED => 10-DEC-2012 | TIME PLOTTED => 09:45

Dist	COUNTY	ROUTE	POST MILES TOTAL PROJECT	SHEET No.	TOTAL SHEETS
05	SB	101,154,166, 192,217	Var	8	25

REGISTERED CIVIL ENGINEER

April 20, 2012
PLANS APPROVAL DATE

REGISTERED PROFESSIONAL ENGINEER
Roberta L. McLaughlin
No. C40375
Exp. 3-31-13
CIVIL
STATE OF CALIFORNIA

THE STATE OF CALIFORNIA OR ITS OFFICERS OR AGENTS SHALL NOT BE RESPONSIBLE FOR THE ACCURACY OR COMPLETENESS OF SCANNED COPIES OF THIS PLAN SHEET.

TO ACCOMPANY PLANS DATED 12-31-12

2010 REVISED STANDARD PLAN RSP A24A

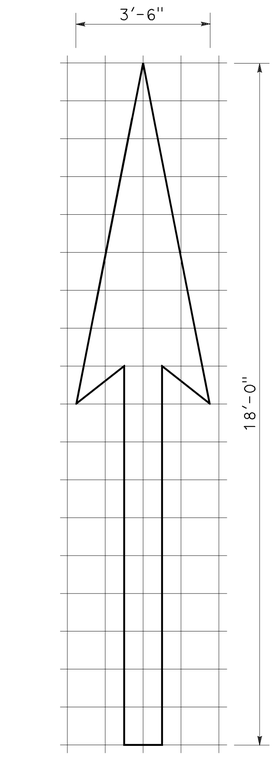

A=25 ft^2

TYPE I 18'-0" ARROW

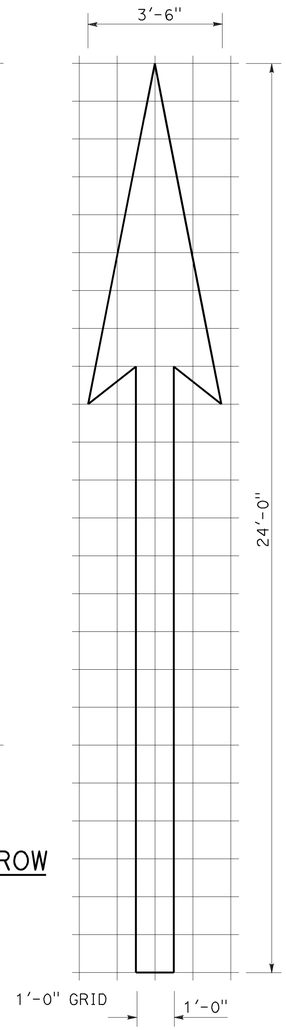

A=31 ft^2

TYPE I 24'-0" ARROW

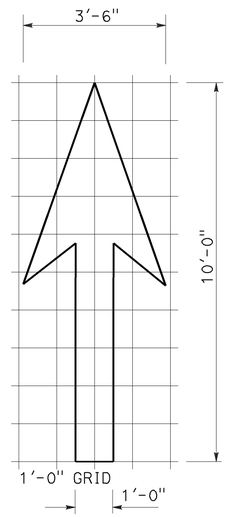

A=14 ft^2

TYPE I 10'-0" ARROW

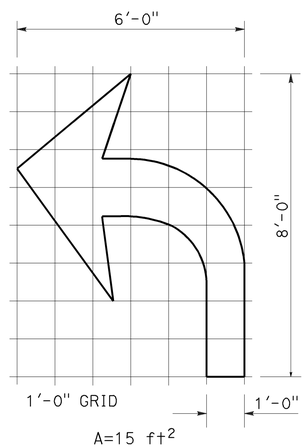

A=15 ft^2

TYPE IV (L) ARROW

(For Type IV (R) arrow, use mirror image)

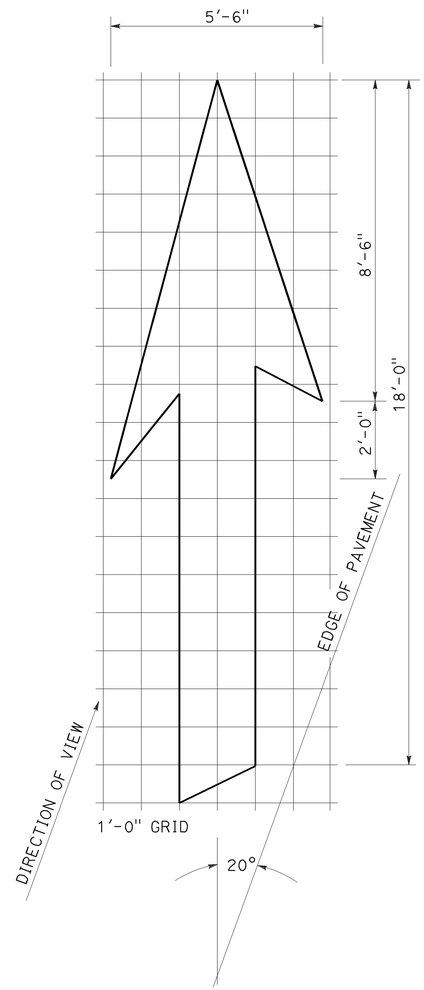

A=42 ft^2

TYPE VI ARROW

Right lane drop arrow
(For left lane, use mirror image)

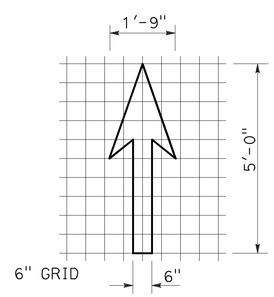

A=3.5 ft^2

BIKE LANE ARROW

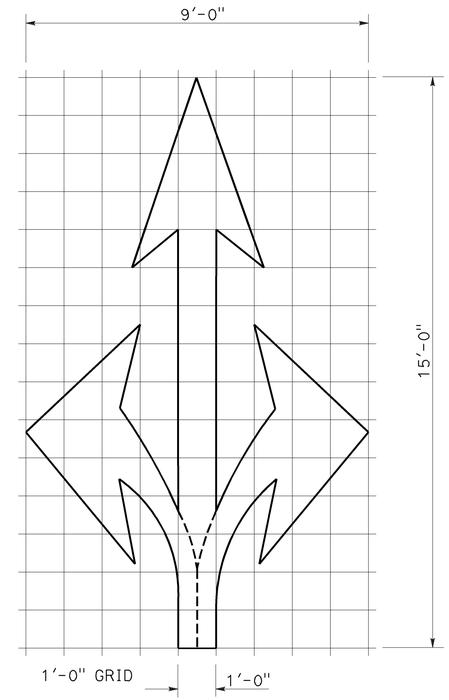

A=36 ft^2

TYPE VIII ARROW

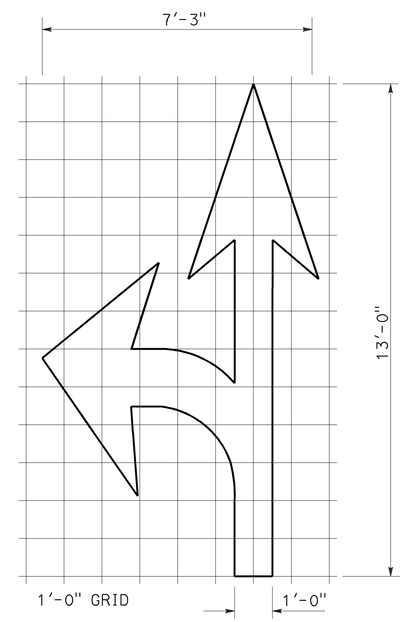

A=27 ft^2

TYPE VII (L) ARROW

(For Type VII (R) arrow, use mirror image)

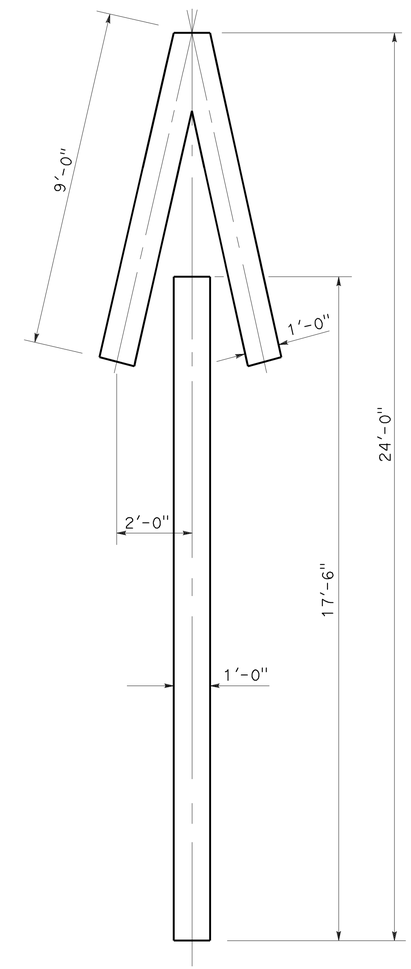

A=33 ft^2

TYPE V ARROW

NOTE:
Minor variations in dimensions may be accepted by the Engineer.

STATE OF CALIFORNIA
DEPARTMENT OF TRANSPORTATION

PAVEMENT MARKINGS ARROWS

NO SCALE

RSP A24A DATED APRIL 20, 2012 SUPERSEDES STANDARD PLAN A24A DATED MAY 20, 2011 - PAGE 13 OF THE STANDARD PLANS BOOK DATED 2010.

REVISED STANDARD PLAN RSP A24A

3-14-12

Dist	COUNTY	ROUTE	POST MILES TOTAL PROJECT	SHEET No.	TOTAL SHEETS
05	SB	101,154,166, 192,217	Var	9	25

REGISTERED CIVIL ENGINEER

October 19, 2012
PLANS APPROVAL DATE

REGISTERED PROFESSIONAL ENGINEER Roberta L. McLaughlin No. C40375 Exp. 3-31-13 CIVIL STATE OF CALIFORNIA

THE STATE OF CALIFORNIA OR ITS OFFICERS OR AGENTS SHALL NOT BE RESPONSIBLE FOR THE ACCURACY OR COMPLETENESS OF SCANNED COPIES OF THIS PLAN SHEET.

NOTE: TO ACCOMPANY PLANS DATED 12-31-12

Minor variations in dimensions may be accepted by the Engineer.

2010 REVISED STANDARD PLAN RSP A24C

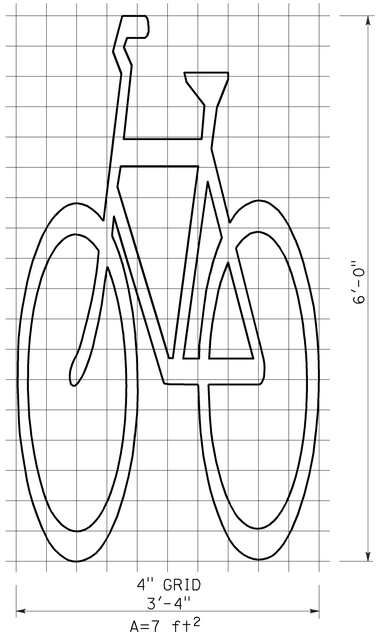

BIKE LANE SYMBOL WITHOUT PERSON

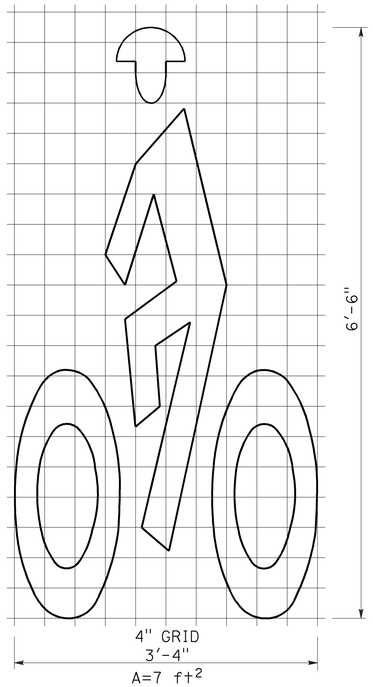

BIKE LANE SYMBOL WITH PERSON

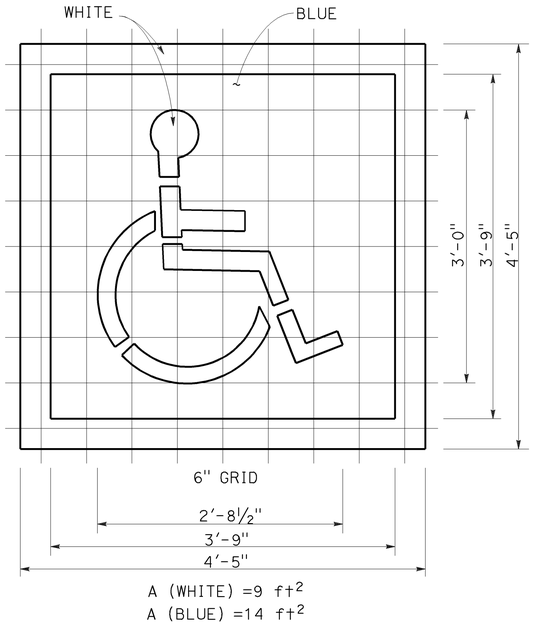

INTERNATIONAL SYMBOL OF ACCESSIBILITY (ISA) MARKING

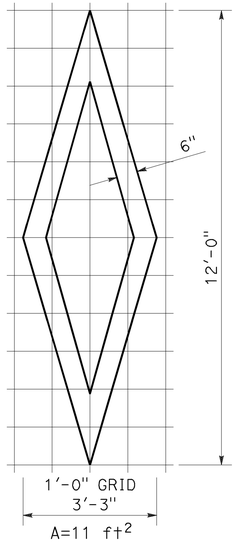

DIAMOND SYMBOL

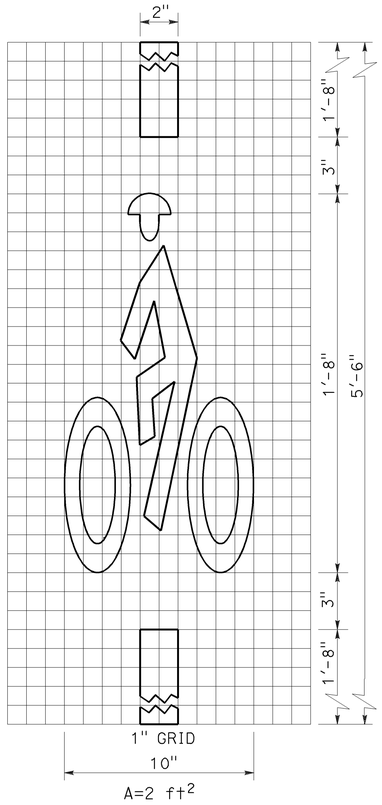

BICYCLE LOOP DETECTOR SYMBOL

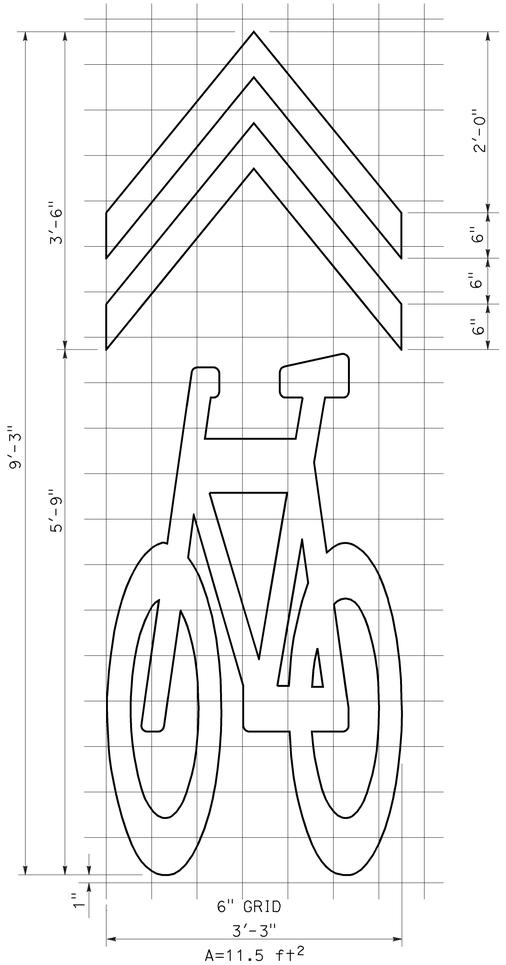

SHARED ROADWAY BICYCLE MARKING

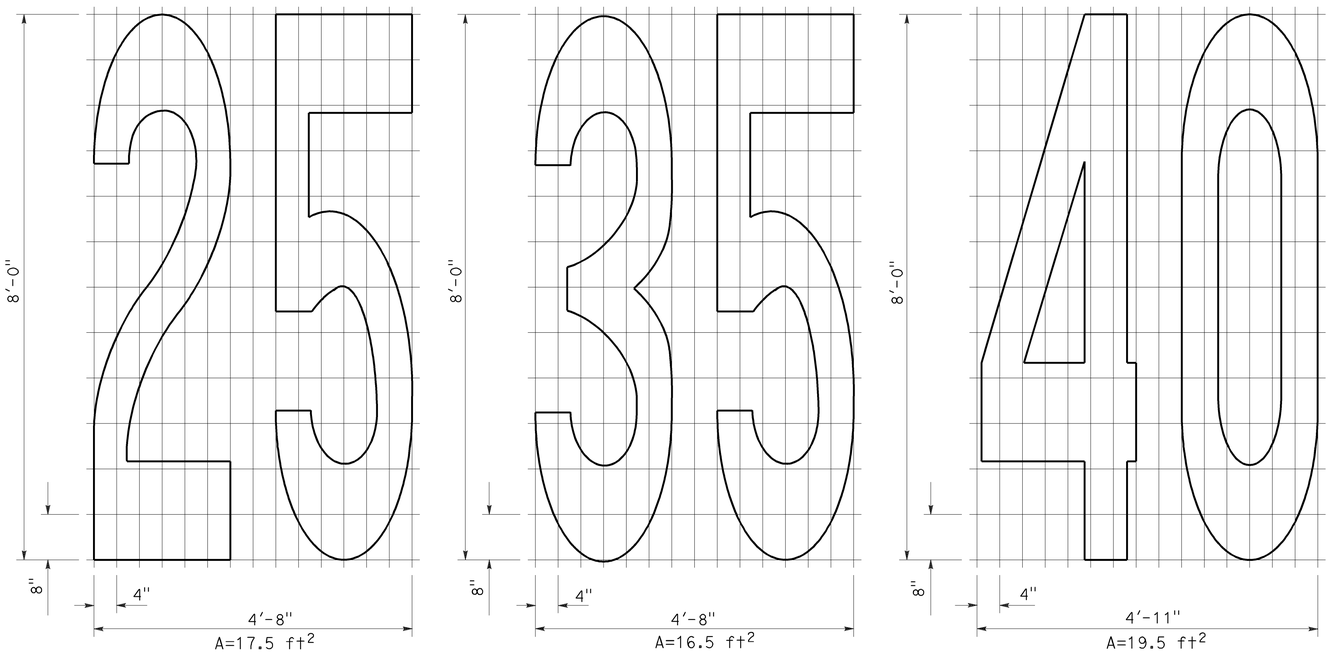

NUMERALS

STATE OF CALIFORNIA
DEPARTMENT OF TRANSPORTATION

PAVEMENT MARKINGS SYMBOLS AND NUMERALS

NO SCALE

RSP A24C DATED OCTOBER 19, 2012 SUPERSEDES STANDARD PLAN A24C DATED MAY 20, 2011 - PAGE 15 OF THE STANDARD PLANS BOOK DATED 2010.

REVISED STANDARD PLAN RSP A24C

6-28-12

Dist	COUNTY	ROUTE	POST MILES TOTAL PROJECT	SHEET No.	TOTAL SHEETS
05	SB	101,154,166, 192,217	Var	10	25

REGISTERED CIVIL ENGINEER

July 20, 2012
PLANS APPROVAL DATE

REGISTERED PROFESSIONAL ENGINEER
Roberta L. McLaughlin
No. C40375
Exp. 3-31-13
CIVIL
STATE OF CALIFORNIA

THE STATE OF CALIFORNIA OR ITS OFFICERS OR AGENTS SHALL NOT BE RESPONSIBLE FOR THE ACCURACY OR COMPLETENESS OF SCANNED COPIES OF THIS PLAN SHEET.

TO ACCOMPANY PLANS DATED 12-31-12

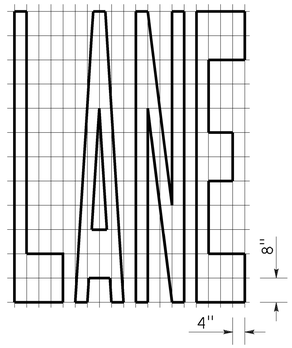

A=24 ft^2

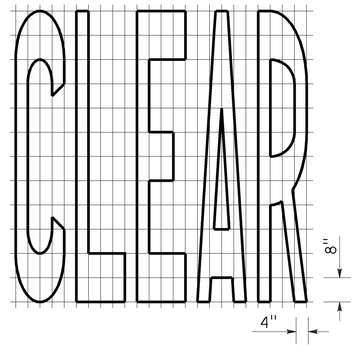

A=27 ft^2

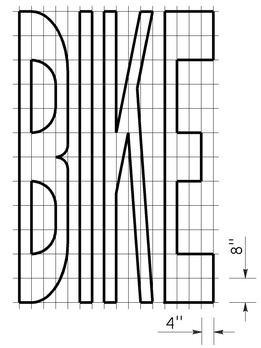

A=21 ft^2

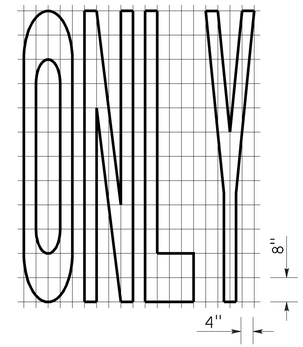

A=22 ft^2

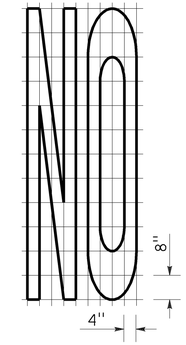

A=14 ft^2

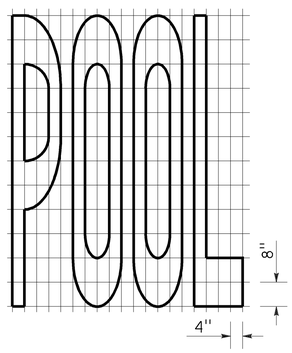

A=23 ft^2

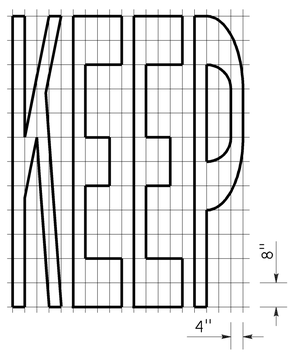

A=24 ft^2

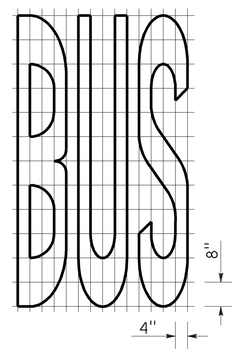

A=20 ft^2

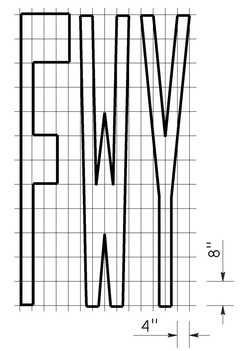

A=16 ft^2

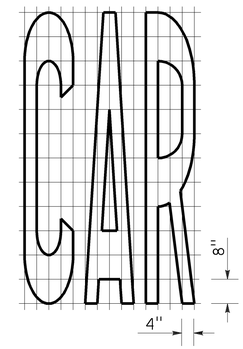

A=17 ft^2

WORD MARKINGS			
ITEM	ft^2	ITEM	ft^2
LANE	24	NO	14
POOL	23	BIKE	21
CAR	17	BUS	20
CLEAR	27	ONLY	22
KEEP	24	FWY	16

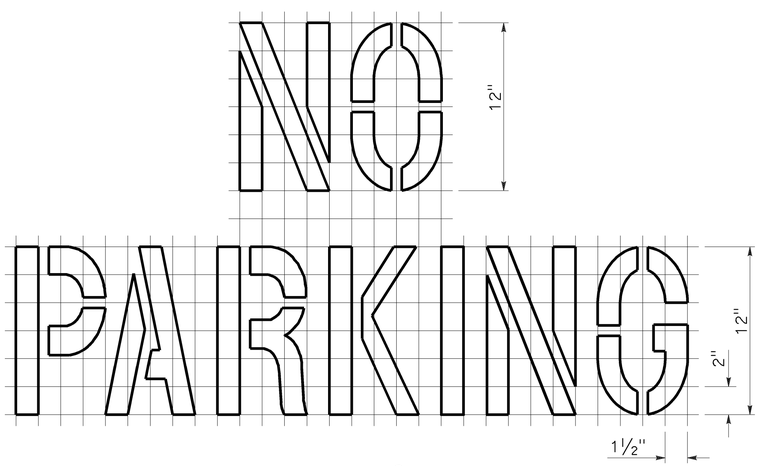

A=2 ft^2
See Notes 6 and 7

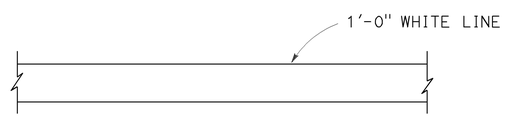

LIMIT LINE (STOP LINE)

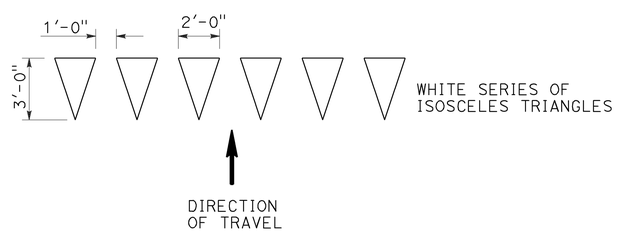

YIELD LINE

NOTES:

1. If a message consists of more than one word, it should read "UP", i.e., the first word should be nearest the driver.
2. The space between words should be at least four times the height of the characters for low speed roads, but not more than ten times the height of the characters. The space may be reduced appropriately where there is limited space because of local conditions.
3. Minor variations in dimensions may be accepted by the Engineer.
4. Portions of a letter, number or symbol may be separated by connecting segments not to exceed 2" in width.
5. The words "NO PARKING" pavement marking is to be used for parking facilities. For typical locations of markings, see Standard Plans A90A and A90B.
6. The words "NO PARKING", shall be painted in white letters no less than 1'-0" high on a contrasting background and located so that it is visible to traffic enforcement officials.

STATE OF CALIFORNIA
DEPARTMENT OF TRANSPORTATION

PAVEMENT MARKINGS WORDS, LIMIT AND YIELD LINES

NO SCALE

RSP A24E DATED JULY 20, 2012 SUPERSEDES STANDARD PLAN A24E
DATED MAY 20, 2011 - PAGE 17 OF THE STANDARD PLANS BOOK DATED 2010.

REVISED STANDARD PLAN RSP A24E

2010 REVISED STANDARD PLAN RSP A24E

6-12-12

DIST	COUNTY	ROUTE	POST MILES TOTAL PROJECT	SHEET No.	TOTAL SHEETS
05	SB	101,154,166, 192,217	Var	11	25

REGISTERED CIVIL ENGINEER 9-11-12 DATE

12-31-12
PLANS APPROVAL DATE

REGISTERED PROFESSIONAL ENGINEER DIOSDADO ACOBA No. 52003 Exp. 12-31-12 CIVIL STATE OF CALIFORNIA

The State of California or its officers or agents shall not be responsible for the accuracy or completeness of electronic copies of this plan sheet.

NOTE: (APPLY TO ALL SHEETS)
---·--·-- Indicates existing.

NOTES: (APPLY TO THIS SHEET ONLY)

Indicates limits of prepare and treat bridge deck with high molecular weight methacrylate or epoxy resin and core (2" Dia x 5" deep) treated bridge deck (2 cores per span with a maximum 8 cores).

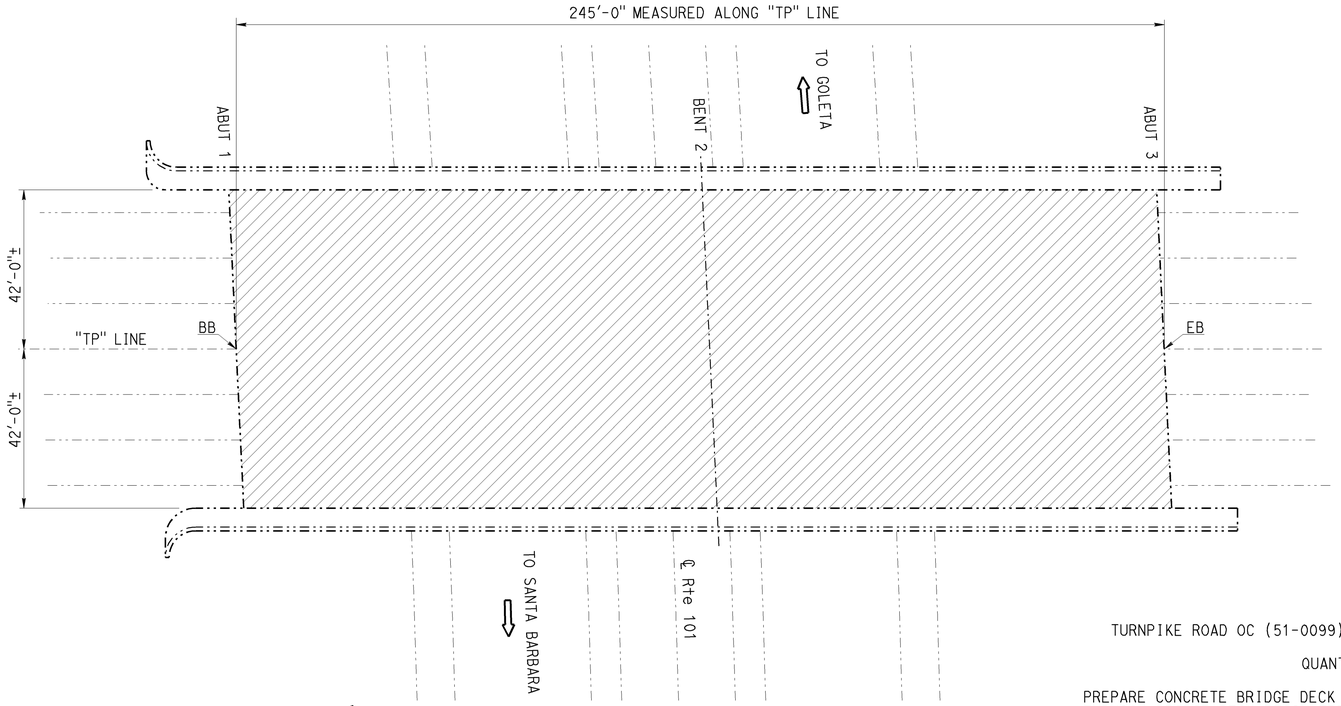

TURNPIKE ROAD OVERCROSSING

Br. No. 51-0099, ROUTE 101, SB, PM 20.06
1" = 20'

TURNPIKE ROAD OC (51-0099)

QUANTITIES

PREPARE CONCRETE BRIDGE DECK SURFACE	20,580	SQFT
FURNISH BRIDGE DECK RESIN TREATMENT MATERIAL	230	GAL
CORE TREATED BRIDGE DECK	4	EA
TREAT BRIDGE DECK	20,580	SQFT

INDEX TO PLANS

SHEET NO.	TITLE
1	GENERAL PLAN NO. 1
2	GENERAL PLAN NO. 2
3	GENERAL PLAN NO. 3
4	GENERAL PLAN NO. 4
5	GENERAL PLAN NO. 5
6	GENERAL PLAN NO. 6
7	GENERAL PLAN NO. 7
8	GENERAL PLAN NO. 8
9	JOINT SEAL DETAILS NO. 1
10	JOINT SEAL DETAILS NO. 2
11	JOINT SEAL DETAILS NO. 3
12	JOINT SEAL DETAILS NO. 4
13	JOINT SEAL DETAILS NO. 5
14	JOINT SEAL DETAILS NO. 6
15	JOINT SEAL ASSEMBLY (MAXIMUM MOVEMENT RATING = 4")

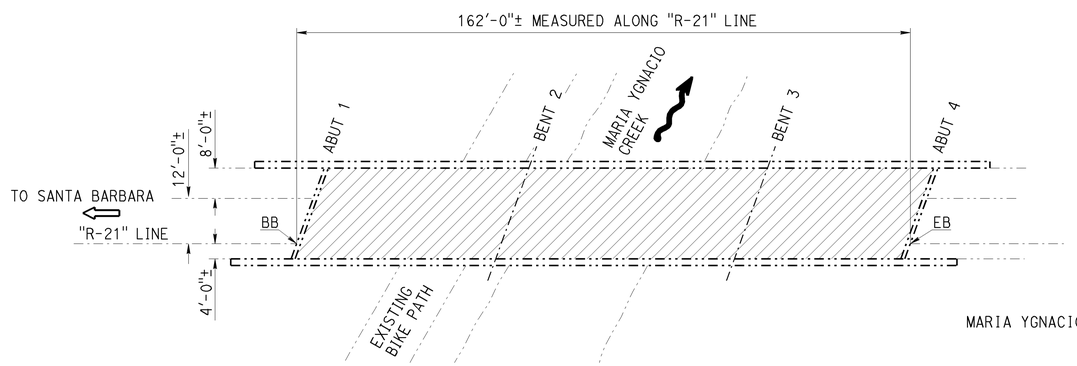

MARIA YGNACIO CREEK

Br. No. 51-0162K, ROUTE 101, SB, PM 20.95
1" = 20'

MARIA YGNACIO CREEK (51-0162K)

QUANTITIES

PREPARE CONCRETE BRIDGE DECK SURFACE	3,890	SQFT
FURNISH BRIDGE DECK RESIN TREATMENT MATERIAL	45	GAL
CORE TREATED BRIDGE DECK	6	EA
TREAT BRIDGE DECK	3,890	SQFT

STANDARD PLANS DATED 2010

SHEET NO.	TITLE
A10A	ABBREVIATIONS (SHEET 1 OF 2)
A10B	ABBREVIATIONS (SHEET 2 OF 2)
B6-21	JOINT SEALS (MAXIMUM MOVEMENT RATING = 2")

STANDARD PLAN SHEET NO.
DETAIL NO.

NOTE:
THE CONTRACTOR SHALL VERIFY ALL CONTROLLING FIELD DIMENSIONS BEFORE ORDERING OR FABRICATING ANY MATERIAL.

DESIGN ENGINEER 9-11-12	DESIGN	BY M. Hashimoto	CHECKED Matt Lee	LOAD FACTOR DESIGN	LIVE LOADING: HS20-44 AND ALTERNATIVE AND PERMIT DESIGN LOAD
	DETAILS	BY Dale Kubochi	CHECKED Matt Lee	LAYOUT	BY Dale Kubochi / CHECKED M. Hashimoto
	QUANTITIES	BY M. Hashimoto	CHECKED Matt Lee	SPECIFICATIONS	BY Adam Menke / PLANS AND SPECS COMPARED Adam Menke

STATE OF CALIFORNIA
DEPARTMENT OF TRANSPORTATION

DIVISION OF MAINTENANCE
STRUCTURE MAINTENANCE DESIGN

BRIDGE NO. VARIOUS
POST MILE VARIES

ROUTE 101, 154, 166, 192, 217 BRIDGES
GENERAL PLAN NO. 1

STRUCTURES MAINTENANCE GENERAL PLAN SHEET (ENGLISH) (REV. 09-01-10)

ORIGINAL SCALE IN INCHES FOR REDUCED PLANS 0 1 2 3

UNIT: 3488
PROJECT NUMBER & PHASE: 0512000023
CONTRACT NO.: 05-1A7901

DISREGARD PRINTS BEARING EARLIER REVISION DATES

REVISION DATES 5-15-12 8-3-12

SHEET 1 OF 15

FILE => 05-1a7901-a-gp01.dgn

USERNAME => s124428 DATE PLOTTED => 31-DEC-2012 TIME PLOTTED => 10:37

DIST	COUNTY	ROUTE	POST MILES TOTAL PROJECT	SHEET No.	TOTAL SHEETS
05	SB	101,154,166, 192,217	Var	12	25

REGISTERED CIVIL ENGINEER 9-11-12 DATE

12-31-12
PLANS APPROVAL DATE

REGISTERED PROFESSIONAL ENGINEER DIOSDADO ACOBA No. 52003 Exp. 12-31-12 CIVIL STATE OF CALIFORNIA

The State of California or its officers or agents shall not be responsible for the accuracy or completeness of electronic copies of this plan sheet.

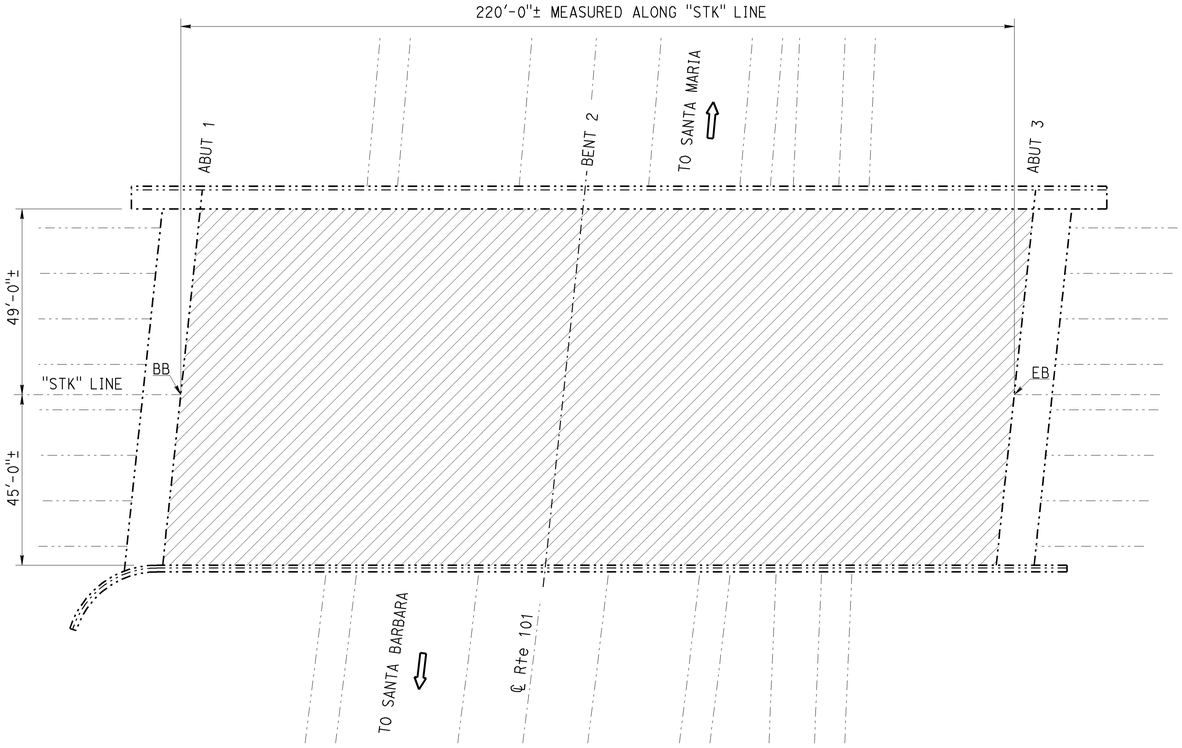

STORKE ROAD OVERCROSSING

Br. No. 51-0307, ROUTE 101, SB, PM 24.77
1" = 20'

STORKE ROAD OC (51-0307)

QUANTITIES

PREPARE CONCRETE BRIDGE DECK SURFACE	20,680	SQFT
FURNISH BRIDGE DECK RESIN TREATMENT MATERIAL	230	GAL
CORE TREATED BRIDGE DECK	4	EA
TREAT BRIDGE DECK	20,680	SQFT

NOTES: (APPLY TO THIS SHEET ONLY)

Indicates limits of prepare and treat bridge deck with high molecular weight methacrylate or epoxy resin and core (2" Dia x 5" deep) treated bridge deck (2 cores per span with a maximum 8 cores).

Indicates location of remove existing joint seal and place new asphaltic plug joint seal. For "Section A-A" & "Section B-B", see "JOINT SEAL DETAILS NO. 1" sheet.

Indicates location of remove existing AC, asphaltic plug joint seal and place new asphaltic plug joint seal. For "Section C-C", see "JOINT SEAL DETAILS NO. 2" sheet.

✳ - Limits for "Section B-B"

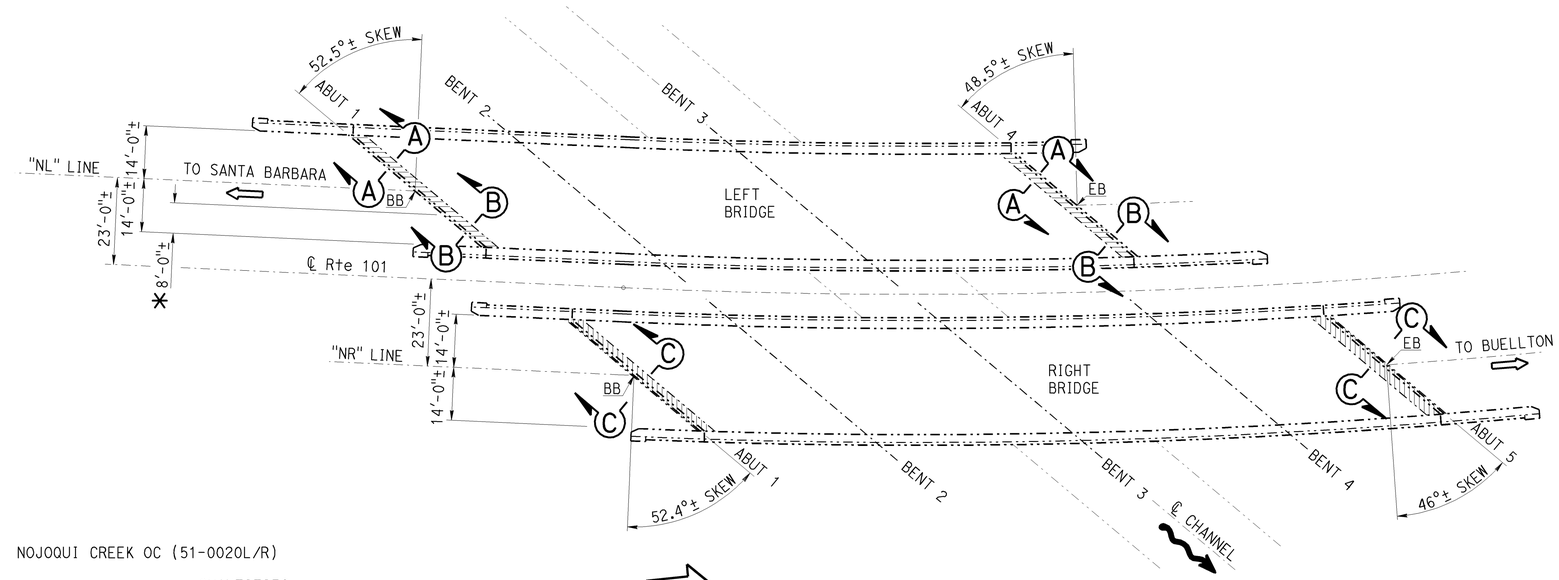

NOJOQUI CREEK OC (51-0020L/R)

QUANTITIES

BRIDGE REMOVAL (PORTION), LOCATION A	LUMP	SUM
STRUCTURAL CONCRETE, BRIDGE	1	CY
JOINT SEAL (ASPHALTIC PLUG)	175	LF
BAR REINFORCING STEEL (BRIDGE)	230	LB

NOJOQUI CREEK

Br. No. 51-0020L/R, ROUTE 101, SB, PM 54.71
1" = 20'

NOTE:
THE CONTRACTOR SHALL VERIFY ALL CONTROLLING FIELD DIMENSIONS BEFORE ORDERING OR FABRICATING ANY MATERIAL.

DESIGN ENGINEER 9-11-12	DESIGN	BY M. Hashimoto	CHECKED Matt Lee	LOAD FACTOR DESIGN	LIVE LOADING: HS20-44 AND ALTERNATIVE AND PERMIT DESIGN LOAD
	DETAILS	BY Dale Kubochi	CHECKED Matt Lee	LAYOUT	BY Dale Kubochi / CHECKED M. Hashimoto
	QUANTITIES	BY M. Hashimoto	CHECKED Matt Lee	SPECIFICATIONS	BY Adam Menke / PLANS AND SPECS COMPARED Adam Menke

STATE OF CALIFORNIA
DEPARTMENT OF TRANSPORTATION

DIVISION OF MAINTENANCE
STRUCTURE MAINTENANCE DESIGN

BRIDGE NO. VARIOUS
POST MILE VARIES

ROUTE 101, 154, 166, 192, 217 BRIDGES
GENERAL PLAN NO. 2

STRUCTURES MAINTENANCE GENERAL PLAN SHEET (ENGLISH) (REV. 09-01-10)

ORIGINAL SCALE IN INCHES FOR REDUCED PLANS 0 1 2 3

UNIT: 3488
PROJECT NUMBER & PHASE: 0512000023
CONTRACT NO.: 05-1A7901

DISREGARD PRINTS BEARING EARLIER REVISION DATES

REVISION DATES 5-18-12 8-3-12

SHEET 2 OF 15

FILE => 05-1a7901-a-gp02.dgn

USERNAME => s124428 DATE PLOTTED => 31-DEC-2012 TIME PLOTTED => 10:37

DIST	COUNTY	ROUTE	POST MILES TOTAL PROJECT	SHEET No.	TOTAL SHEETS
05	SB	101,154,166, 192,217	Var	13	25

REGISTERED CIVIL ENGINEER 9-11-12 DATE

12-31-12
PLANS APPROVAL DATE

REGISTERED PROFESSIONAL ENGINEER DIOSDADO ACOBA No. 52003 Exp. 12-31-12 CIVIL STATE OF CALIFORNIA

The State of California or its officers or agents shall not be responsible for the accuracy or completeness of electronic copies of this plan sheet.

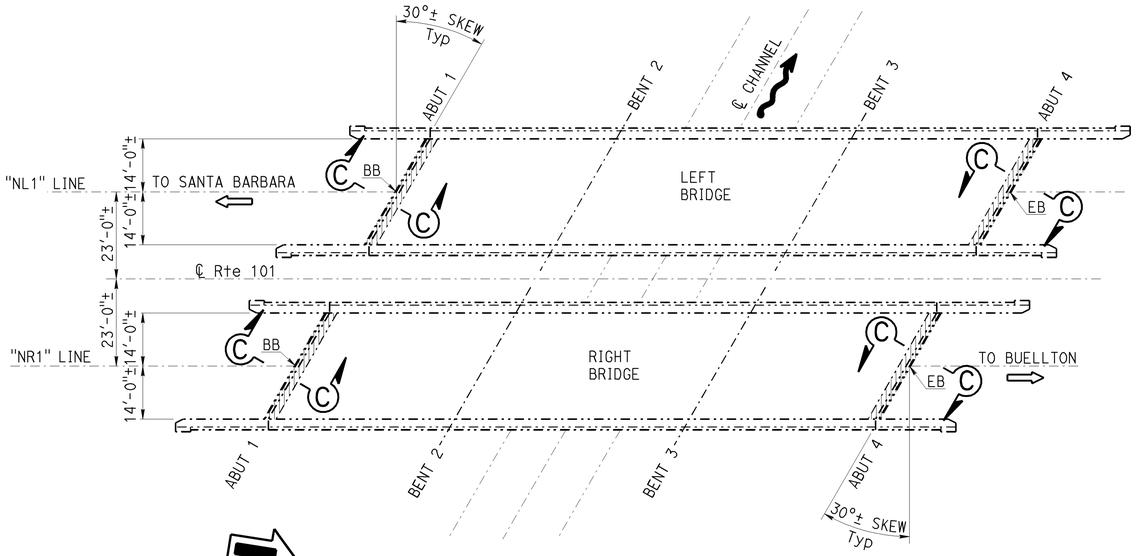

NOJOQUI CREEK

Br. No. 51-0074L/R, ROUTE 101, SB, PM 54.85
1" = 20'

NOTES: (APPLY TO THIS SHEET ONLY)

Indicates location of remove existing AC, asphaltic plug joint seal and place new asphaltic plug joint seal. For "Section C-C", see "JOINT SEAL DETAILS NO. 2" sheet.

NOJOQUI CREEK OC (51-0074L/R)

QUANTITIES

JOINT SEAL (ASPHALTIC PLUG)	130 LF

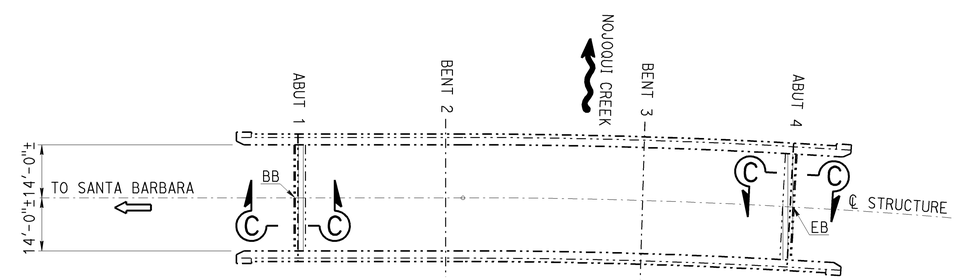

NOJOQUI CREEK

Br. No. 51-0019L, ROUTE 101, SB, PM 55.66
1" = 20'

NOJOQUI CREEK OC (51-0019L)

QUANTITIES

JOINT SEAL (ASPHALTIC PLUG)	56 LF

NOTE:
THE CONTRACTOR SHALL VERIFY ALL CONTROLLING FIELD DIMENSIONS BEFORE ORDERING OR FABRICATING ANY MATERIAL.

DESIGN ENGINEER 9-11-12	DESIGN	BY M. Hashimoto	CHECKED Matt Lee	LOAD FACTOR DESIGN	LIVE LOADING: HS20-44 AND ALTERNATIVE AND PERMIT DESIGN LOAD
	DETAILS	BY Dale Kubochi	CHECKED Matt Lee	LAYOUT	BY Dale Kubochi / CHECKED M. Hashimoto
	QUANTITIES	BY M. Hashimoto	CHECKED Matt Lee	SPECIFICATIONS	BY Adam Menke / PLANS AND SPECS COMPARED Adam Menke

STATE OF CALIFORNIA
DEPARTMENT OF TRANSPORTATION

DIVISION OF MAINTENANCE
STRUCTURE MAINTENANCE DESIGN

BRIDGE NO. VARIOUS
POST MILE VARIES

ROUTE 101, 154, 166, 192, 217 BRIDGES
GENERAL PLAN NO. 3

STRUCTURES MAINTENANCE GENERAL PLAN SHEET (ENGLISH) (REV. 09-01-10)

ORIGINAL SCALE IN INCHES FOR REDUCED PLANS 0 1 2 3

UNIT: 3488
PROJECT NUMBER & PHASE: 0512000023
CONTRACT NO.: 05-1A7901

DISREGARD PRINTS BEARING EARLIER REVISION DATES

REVISION DATES 5-15-12

SHEET 3 OF 15

FILE => 05-1a7901-a-gp03.dgn

USERNAME => s124428 DATE PLOTTED => 31-DEC-2012 TIME PLOTTED => 10:38

DIST	COUNTY	ROUTE	POST MILES TOTAL PROJECT	SHEET No.	TOTAL SHEETS
05	SB	101,154,166, 192,217	Var	14	25

REGISTERED CIVIL ENGINEER 9-11-12 DATE

12-31-12
PLANS APPROVAL DATE

REGISTERED PROFESSIONAL ENGINEER DIOSDADO ACOBA No. 52003 Exp. 12-31-12 CIVIL STATE OF CALIFORNIA

The State of California or its officers or agents shall not be responsible for the accuracy or completeness of electronic copies of this plan sheet.

NOTES: (APPLY TO THIS SHEET ONLY)

Indicates location of remove existing AC, asphaltic plug joint seal and place new asphaltic plug joint seal. For "Section C-C", see "JOINT SEAL DETAILS NO. 2" sheet.

Indicates location of remove existing AC and place new asphaltic plug joint seal. For "Section E-E" & "Section F-F", see "JOINT SEAL DETAILS NO. 3" sheet.

Indicates limits of prepare and treat bridge deck with high molecular weight methacrylate or epoxy resin and core (2" Dia x 5" deep) treated bridge deck (2 cores per span with a maximum 8 cores).

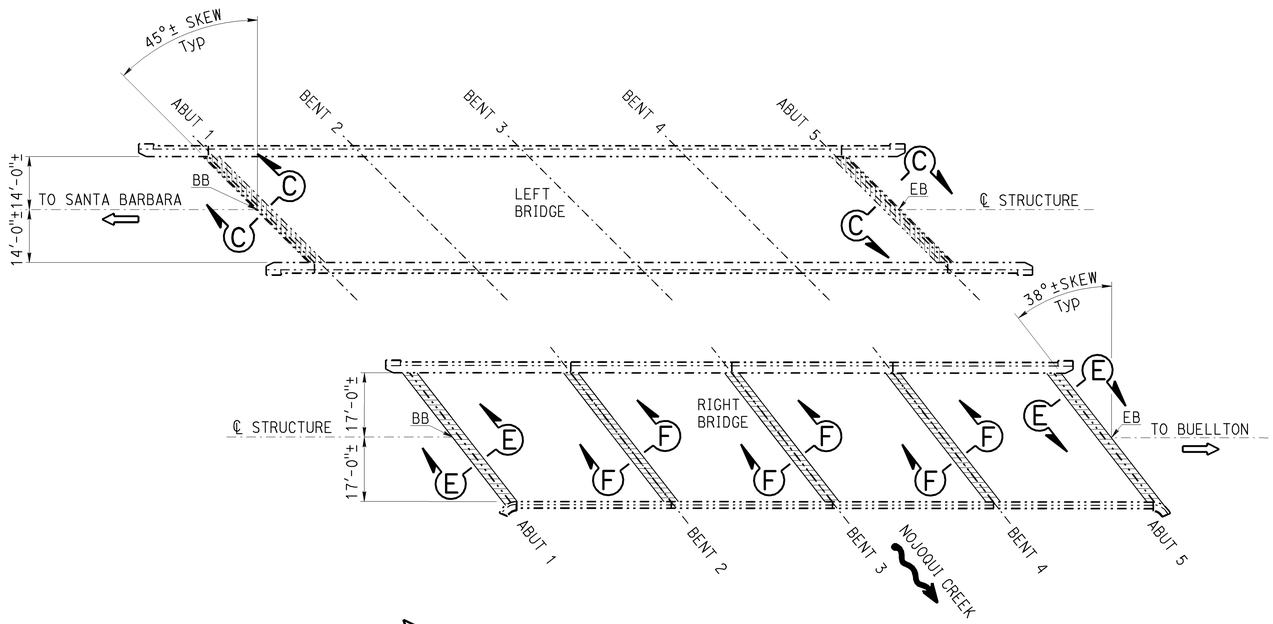

NOJOQUI CREEK

Br. No. 51-0018L/R, ROUTE 101, SB, PM 56.00
1" = 20'

NOJOQUI CREEK OC (51-0018L/R)

QUANTITIES

JOINT SEAL (ASPHALTIC PLUG)	295	LF

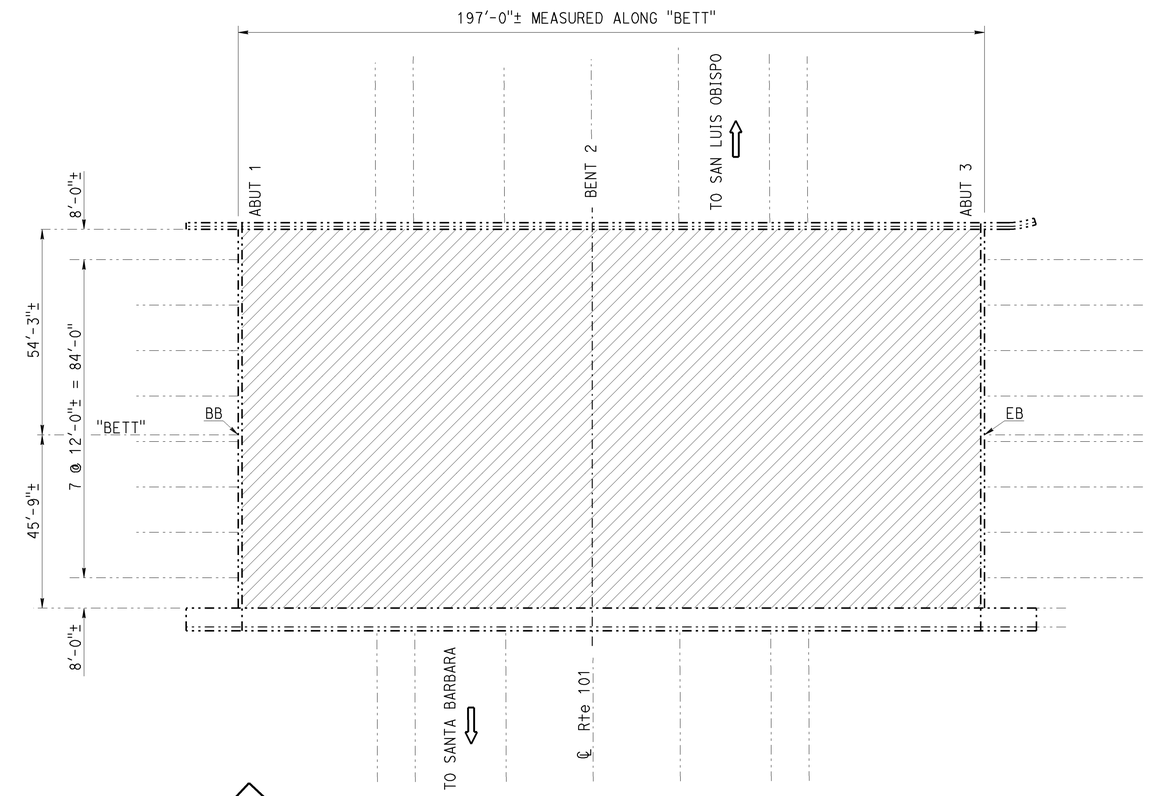

BETTERAVIA ROAD OVERCROSSING

Br. No. 51-0306, ROUTE 101, SB, PM 86.59
1" = 20'

BETTERAVIA ROAD OC (51-0306)

QUANTITIES

PREPARE CONCRETE BRIDGE DECK SURFACE	19,700	SQFT
FURNISH BRIDGE DECK RESIN TREATMENT MATERIAL	220	GAL
CORE TREATED BRIDGE DECK	4	EA
TREAT BRIDGE DECK	19,700	SQFT

NOTE:
THE CONTRACTOR SHALL VERIFY ALL CONTROLLING FIELD DIMENSIONS BEFORE ORDERING OR FABRICATING ANY MATERIAL.

DESIGN ENGINEER 9-11-12	DESIGN	BY M. Hashimoto	CHECKED Matt Lee	LOAD FACTOR DESIGN	LIVE LOADING: HS20-44 AND ALTERNATIVE AND PERMIT DESIGN LOAD
	DETAILS	BY Dale Kubochi	CHECKED Matt Lee	LAYOUT	BY Dale Kubochi / CHECKED M. Hashimoto
	QUANTITIES	BY M. Hashimoto	CHECKED Matt Lee	SPECIFICATIONS	BY Adam Menke / PLANS AND SPECS COMPARED Adam Menke

STATE OF CALIFORNIA
DEPARTMENT OF TRANSPORTATION

DIVISION OF MAINTENANCE
STRUCTURE MAINTENANCE DESIGN

BRIDGE NO. VARIOUS
POST MILE VARIES

ROUTE 101, 154, 166, 192, 217 BRIDGES
GENERAL PLAN NO. 4

STRUCTURES MAINTENANCE GENERAL PLAN SHEET (ENGLISH) (REV. 09-01-10)

ORIGINAL SCALE IN INCHES FOR REDUCED PLANS 0 1 2 3

UNIT: 3488
PROJECT NUMBER & PHASE: 0512000023
CONTRACT NO.: 05-1A7901

DISREGARD PRINTS BEARING EARLIER REVISION DATES

REVISION DATES 5-3-12 8-3-12

SHEET 4 OF 15

FILE => 05-1a7901-a-gp04.dgn

USERNAME => s124428 DATE PLOTTED => 31-DEC-2012 TIME PLOTTED => 10:38

DIST	COUNTY	ROUTE	POST MILES TOTAL PROJECT	SHEET No.	TOTAL SHEETS
05	SB	101,154,166, 192,217	Var	15	25

REGISTERED CIVIL ENGINEER 9-11-12 DATE

12-31-12
PLANS APPROVAL DATE

REGISTERED PROFESSIONAL ENGINEER
DIOSDADO ACOBA
No. 52003
Exp. 12-31-12
CIVIL
STATE OF CALIFORNIA

The State of California or its officers or agents shall not be responsible for the accuracy or completeness of electronic copies of this plan sheet.

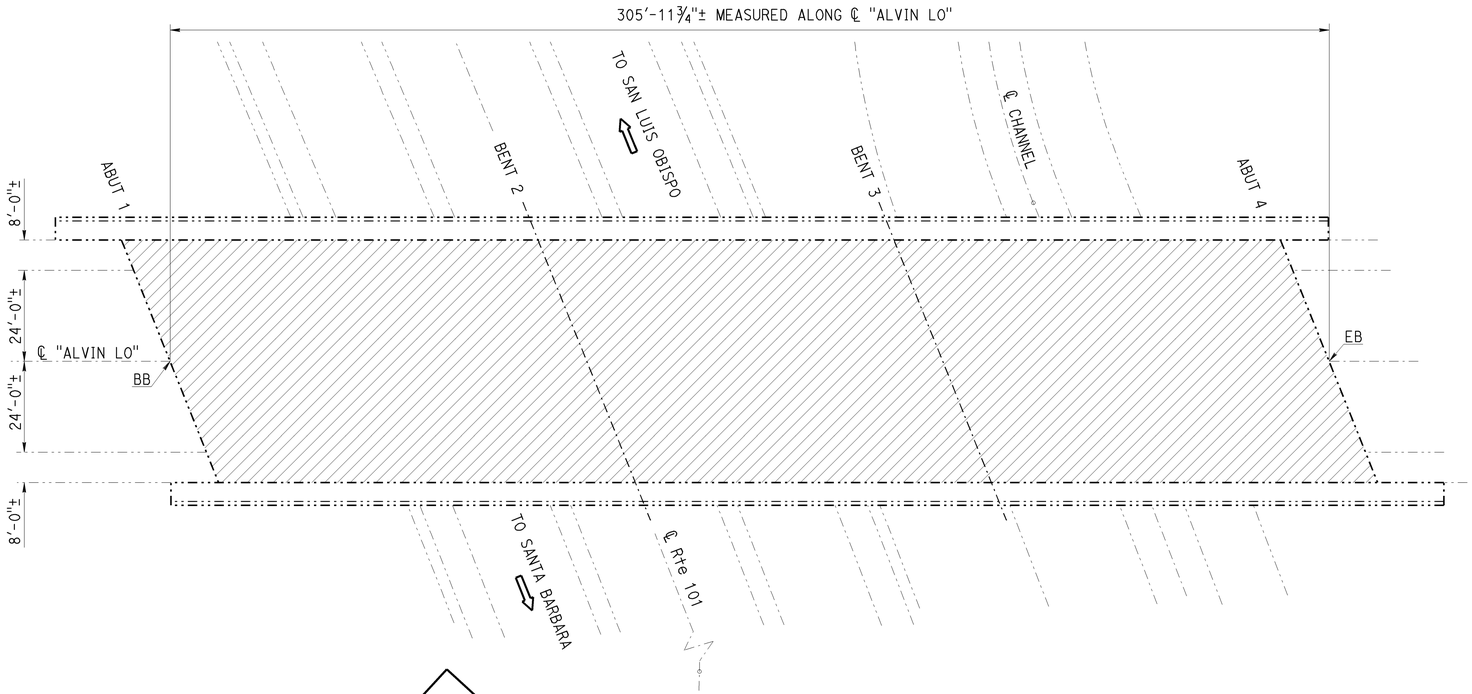

ALVIN AVENUE OVERCROSSING

Br. No. 51-0040, ROUTE 101, SB, PM 89.13
1" = 20'

NOTES: (APPLY TO THIS SHEET ONLY)

Indicates limits of prepare and treat bridge deck with high molecular weight methacrylate or epoxy resin and core (2" Dia x 5" deep) treated bridge deck (2 cores per span with a maximum 8 cores).

ALVIN AVENUE OC (51-0040)

QUANTITIES

PUBLIC SAFETY PLAN	LUMP	SUM
PREPARE CONCRETE BRIDGE DECK SURFACE	19,590	SQFT
FURNISH BRIDGE DECK RESIN TREATMENT MATERIAL	220	GAL
CORE TREATED BRIDGE DECK	6	EA
TREAT BRIDGE DECK	19,590	SQFT

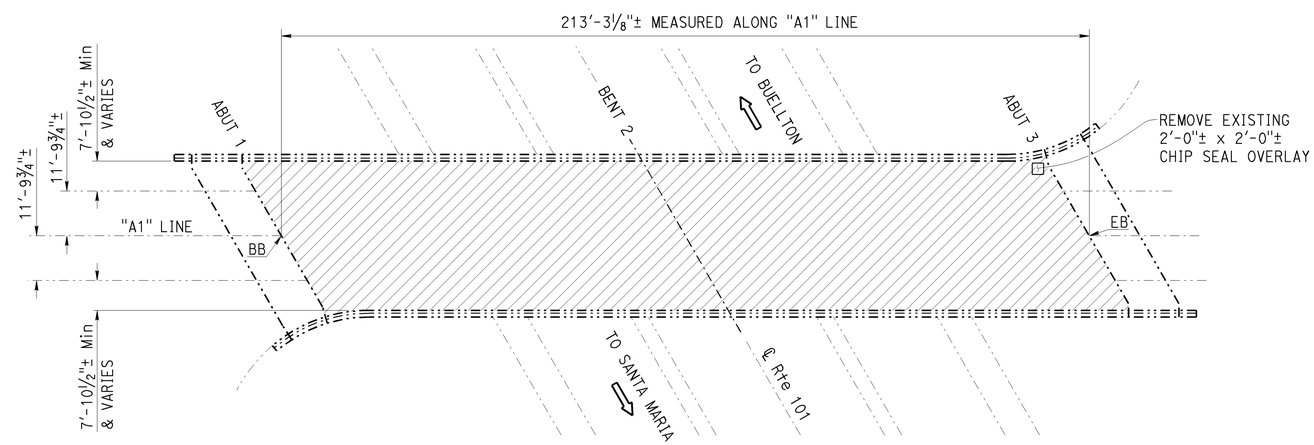

ROUTE 154/101 SEP. (51-0329)

QUANTITIES

PREPARE CONCRETE BRIDGE DECK SURFACE	8,400	SQFT
REMOVE CHIP SEAL	4	SQFT
FURNISH BRIDGE DECK RESIN TREATMENT MATERIAL	95	GAL
CORE TREATED BRIDGE DECK	4	EA
TREAT BRIDGE DECK	8,400	SQFT

NOTE:
THE CONTRACTOR SHALL VERIFY ALL CONTROLLING FIELD DIMENSIONS BEFORE ORDERING OR FABRICATING ANY MATERIAL.

ROUTE 154/101 SEPARATION

Br. No. 51-0329, ROUTE 154, SB, PM 63.30
1" = 20'

DESIGN ENGINEER 9-11-12	DESIGN	BY M. Hashimoto	CHECKED Matt Lee	LOAD FACTOR DESIGN	LIVE LOADING: HS20-44 AND ALTERNATIVE AND PERMIT DESIGN LOAD
	DETAILS	BY Dale Kubochi	CHECKED Matt Lee	LAYOUT	BY Dale Kubochi / CHECKED M. Hashimoto
	QUANTITIES	BY M. Hashimoto	CHECKED Matt Lee	SPECIFICATIONS	BY Adam Menke / PLANS AND SPECS COMPARED Adam Menke

STATE OF CALIFORNIA
DEPARTMENT OF TRANSPORTATION

DIVISION OF MAINTENANCE
STRUCTURE MAINTENANCE DESIGN

BRIDGE NO. VARIOUS
POST MILE VARIES

ROUTE 101, 154, 166, 192, 217 BRIDGES
GENERAL PLAN NO. 5

STRUCTURES MAINTENANCE GENERAL PLAN SHEET (ENGLISH) (REV. 09-01-10)

ORIGINAL SCALE IN INCHES FOR REDUCED PLANS 0 1 2 3

UNIT: 3488
PROJECT NUMBER & PHASE: 0512000023
CONTRACT NO.: 05-1A7901

DISREGARD PRINTS BEARING EARLIER REVISION DATES
REVISION DATES 8-1-12 8-2-12 8-7-12

SHEET 5 OF 15

FILE => 05-1a7901-a-gp05.dgn

USERNAME => s124428 DATE PLOTTED => 31-DEC-2012 TIME PLOTTED => 10:38

DIST	COUNTY	ROUTE	POST MILES TOTAL PROJECT	SHEET No.	TOTAL SHEETS
05	SB	101,154,166, 192,217	Var	16	25

REGISTERED CIVIL ENGINEER 9-11-12 DATE

12-31-12
PLANS APPROVAL DATE

REGISTERED PROFESSIONAL ENGINEER DIOSDADO ACOBA No. 52003 Exp. 12-31-12 CIVIL STATE OF CALIFORNIA

The State of California or its officers or agents shall not be responsible for the accuracy or completeness of electronic copies of this plan sheet.

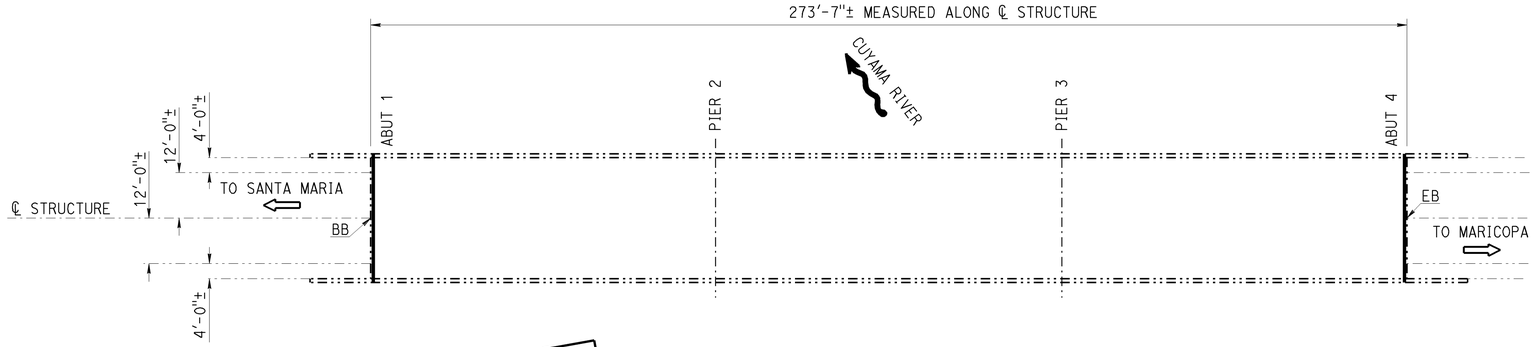

CUYAMA RIVER

Br. No. 51-0218, ROUTE 166, SB, PM R30.37
1" = 20'

CUYAMA RIVER (51-0218)

QUANTITIES

CLEAN EXPANSION JOINT	66	LF
JOINT SEAL (MR 1")	66	LF

NOTES: (APPLY TO THIS SHEET ONLY)

Indicates limits of prepare concrete bridge deck surface, furnish and place new ¾" minimum depth polyester concrete overlay. Prior to placing new polyester concrete overlay, remove unsound concrete and patch with rapid setting concrete as shown on the "Deck Repair Detail - Overlay" on "JOINT SEAL DETAILS NO. 6" sheet.

Indicates location of existing joint seal removal and placement of new joint seal.

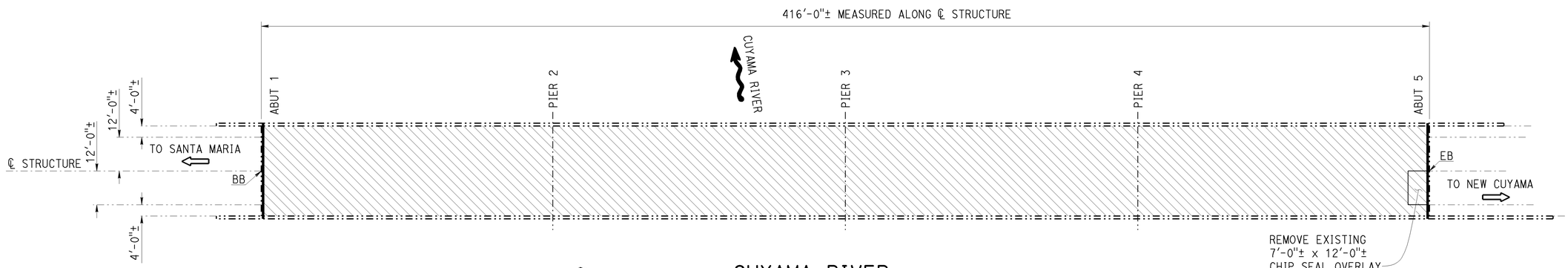

CUYAMA RIVER

Br. No. 51-0041, ROUTE 166, SB, PM R34.95
1" = 20'

CUYAMA RIVER (51-0041)

QUANTITIES

REMOVE UNSOUND CONCRETE	33	CF
PREPARE CONCRETE BRIDGE DECK SURFACE	13,320	SQFT
REMOVE CHIP SEAL	84	SQFT
CLEAN EXPANSION JOINT	66	LF
RAPID SETTING CONCRETE (PATCH)	33	CF
FURNISH POLYESTER CONCRETE OVERLAY	1,000	CF
PLACE POLYESTER CONCRETE OVERLAY	13,320	SQFT
JOINT SEAL (MR 1 1/2")	33	LF
JOINT SEAL (MR 2")	33	LF

NOTE:
THE CONTRACTOR SHALL VERIFY ALL CONTROLLING FIELD DIMENSIONS BEFORE ORDERING OR FABRICATING ANY MATERIAL.

9-11-12 DESIGN ENGINEER	DESIGN	BY M. Hashimoto	CHECKED Matt Lee	LOAD FACTOR DESIGN	LIVE LOADING: HS20-44 AND ALTERNATIVE AND PERMIT DESIGN LOAD	
	DETAILS	BY Dale Kubochi	CHECKED Matt Lee	LAYOUT	BY Dale Kubochi	CHECKED M. Hashimoto
	QUANTITIES	BY M. Hashimoto	CHECKED Matt Lee	SPECIFICATIONS	BY Adam Menke	PLANS AND SPECS COMPARED Adam Menke

STATE OF CALIFORNIA
DEPARTMENT OF TRANSPORTATION

DIVISION OF MAINTENANCE
STRUCTURE MAINTENANCE DESIGN

BRIDGE NO. VARIOUS
POST MILE VARIES

ROUTE 101, 154, 166, 192, 217 BRIDGES
GENERAL PLAN NO. 6

STRUCTURES MAINTENANCE GENERAL PLAN SHEET (ENGLISH) (REV. 09-01-10)

ORIGINAL SCALE IN INCHES FOR REDUCED PLANS 0 1 2 3

UNIT: 3488
PROJECT NUMBER & PHASE: 0512000023
CONTRACT NO.: 05-1A7901

DISREGARD PRINTS BEARING EARLIER REVISION DATES

REVISION DATES 5-13-12 8-7-12

SHEET 6 OF 15

FILE => 05-1a7901-a-gp06.dgn

USERNAME => s124428 DATE PLOTTED => 31-DEC-2012 TIME PLOTTED => 10:38

DIST	COUNTY	ROUTE	POST MILES TOTAL PROJECT	SHEET No.	TOTAL SHEETS
05	SB	101,154,166, 192,217	Var	17	25

REGISTERED CIVIL ENGINEER 9-11-12 DATE

12-31-12
PLANS APPROVAL DATE

REGISTERED PROFESSIONAL ENGINEER DIOSDADO ACOBA No. 52003 Exp. 12-31-12 CIVIL STATE OF CALIFORNIA

The State of California or its officers or agents shall not be responsible for the accuracy or completeness of electronic copies of this plan sheet.

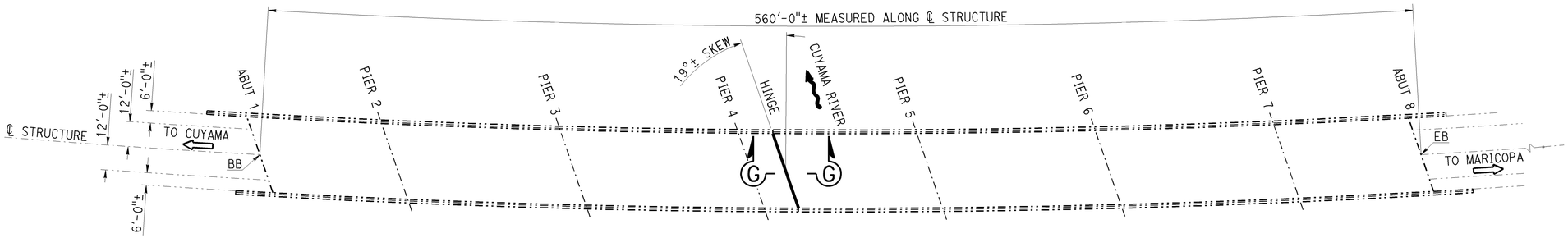

CUYAMA RIVER

Br. No. 51-0066, ROUTE 166, SB, PM R69.94
1" = 30'

CUYAMA RIVER (51-0066)

QUANTITIES

BRIDGE REMOVAL (PORTION), LOCATION B	LUMP	SUM
STRUCTURAL CONCRETE, BRIDGE	1	CY
JOINT SEAL ASSEMBLY (MR 3")	40	LF
BAR REINFORCING STEEL (BRIDGE)	165	LB

NOTES: (APPLY TO THIS SHEET ONLY)

Indicates limits of prepare and treat bridge deck with high molecular weight methacrylate or epoxy resin and core (2" Dia x 5" deep) treated bridge deck (2 cores per span with a maximum 8 cores).

Indicates location of existing joint seal removal and placement of new joint seal.

- For "Section G-G" and "Section H-H", see "JOINT SEAL DETAILS NO. 4" sheet.

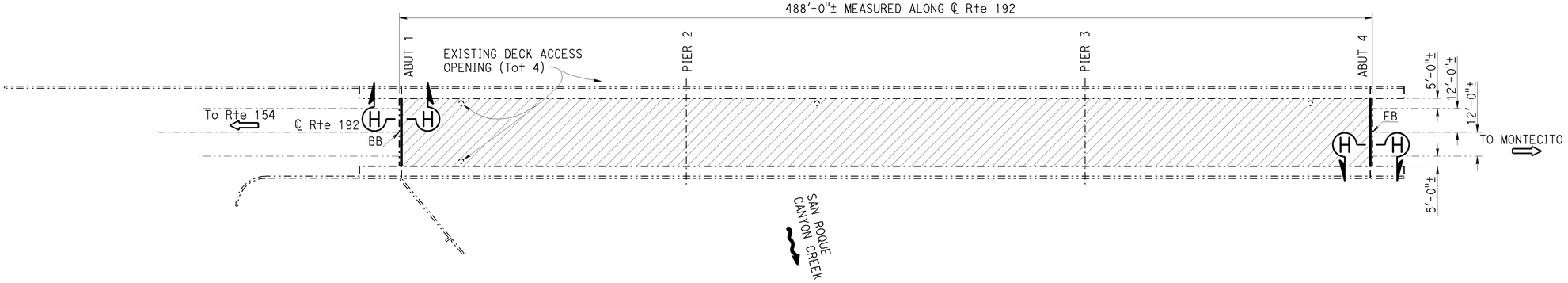

SAN ROQUE CANYON

Br. No. 51-0104, ROUTE 192, SB, PM 1.77
1" = 30'

SAN ROQUE CANYON (51-0104)

QUANTITIES

PUBLIC SAFETY PLAN	LUMP	SUM
PREPARE CONCRETE BRIDGE DECK SURFACE	16,600	SQFT
FURNISH BRIDGE DECK RESIN TREATMENT MATERIAL	185	GAL
CORE TREATED BRIDGE DECK	6	EA
BRIDGE REMOVAL (PORTION), LOCATION C	LUMP	SUM
STRUCTURAL CONCRETE, BRIDGE	6	CY
JOINT SEAL (MR 1 1/2")	35	LF
JOINT SEAL (MR 2")	35	LF
BAR REINFORCING STEEL (BRIDGE)	237	LB
TREAT BRIDGE DECK	16,600	SQFT

NOTE:
THE CONTRACTOR SHALL VERIFY ALL CONTROLLING FIELD DIMENSIONS BEFORE ORDERING OR FABRICATING ANY MATERIAL.

DESIGN ENGINEER 9-11-12

	BY	CHECKED			
DESIGN	M. Hashimoto	Matt Lee	LOAD FACTOR DESIGN	LIVE LOADING: HS20-44 AND ALTERNATIVE AND PERMIT DESIGN LOAD	
DETAILS	Dale Kubochi	Matt Lee	LAYOUT	Dale Kubochi	M. Hashimoto
QUANTITIES	M. Hashimoto	Matt Lee	SPECIFICATIONS	Adam Menke	Adam Menke

STATE OF CALIFORNIA
DEPARTMENT OF TRANSPORTATION

DIVISION OF MAINTENANCE
STRUCTURE MAINTENANCE DESIGN

BRIDGE NO. VARIOUS
POST MILE VARIES

ROUTE 101, 154, 166, 192, 217 BRIDGES
GENERAL PLAN NO. 7

STRUCTURES MAINTENANCE GENERAL PLAN SHEET (ENGLISH) (REV. 09-01-10)

ORIGINAL SCALE IN INCHES FOR REDUCED PLANS 0 1 2 3

UNIT: 3488
PROJECT NUMBER & PHASE: 0512000023
CONTRACT NO.: 05-1A7901

DISREGARD PRINTS BEARING EARLIER REVISION DATES

REVISION DATES 5-13-12 8-1-12 9-24-12

SHEET 7 OF 15

FILE => 05-1a7901-a-gp07.dgn

USERNAME => s124428 DATE PLOTTED => 31-DEC-2012 TIME PLOTTED => 10:38

DIST	COUNTY	ROUTE	POST MILES TOTAL PROJECT	SHEET No.	TOTAL SHEETS
05	SB	101,154,166, 192,217	Var	18	25

REGISTERED CIVIL ENGINEER 9-11-12 DATE

12-31-12
PLANS APPROVAL DATE

REGISTERED PROFESSIONAL ENGINEER
DIOSDADO ACOBA
No. 52003
Exp. 12-31-12
CIVIL
STATE OF CALIFORNIA

The State of California or its officers or agents shall not be responsible for the accuracy or completeness of electronic copies of this plan sheet.

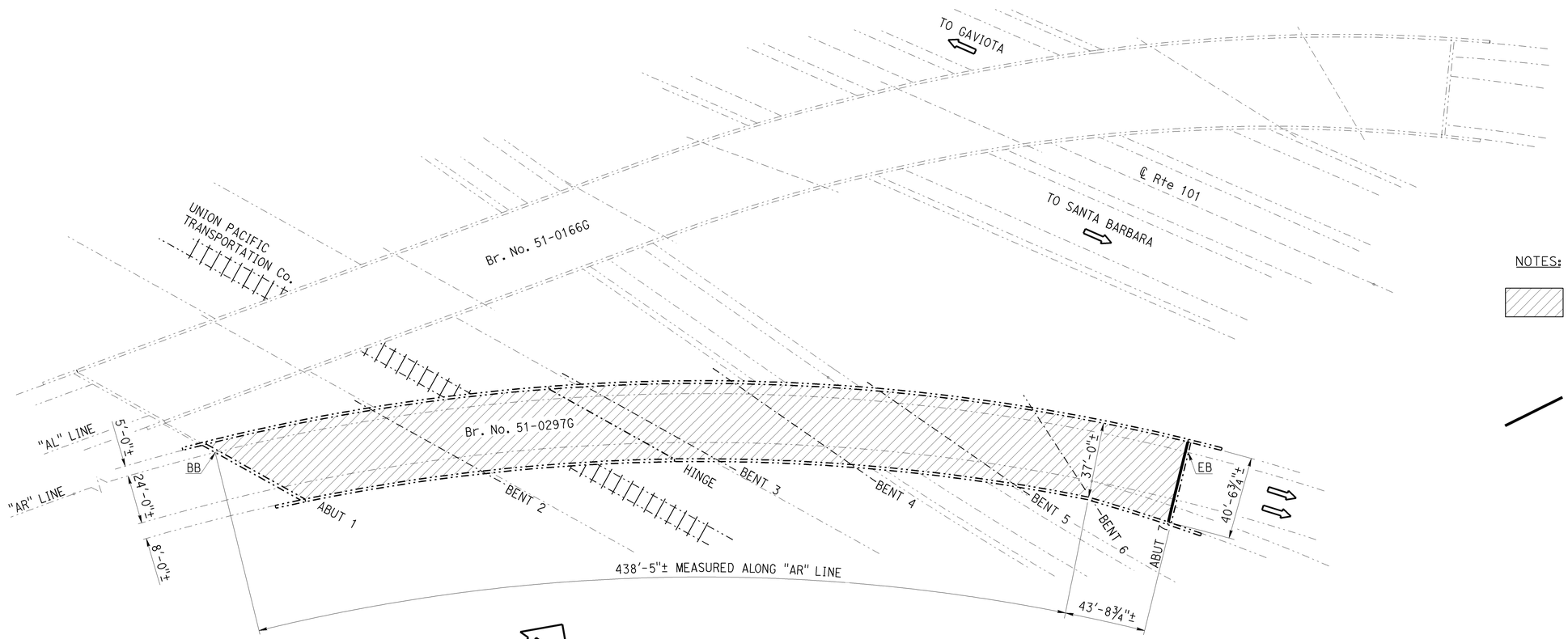

E217-S101 CONNECTOR

Br. No. 51-0297G, ROUTE 217, SB, PM 2.67
1" = 30'

NOTES: (APPLY TO THIS SHEET ONLY)

Indicates limits of prepare and treat bridge deck with high molecular weight methacrylate or epoxy resin and core (2" Dia x 5" deep) treated bridge deck (2 cores per span with a maximum 8 cores).

Indicates location of existing joint seal removal and placement of new joint seal.

E217-S101 CONNECTOR (51-0297G)

QUANTITIES

PUBLIC SAFETY PLAN	LUMP	SUM
PREPARE CONCRETE BRIDGE DECK SURFACE	18,630	SQFT
FURNISH BRIDGE DECK RESIN TREATMENT MATERIAL	210	GAL
CORE TREATED BRIDGE DECK	8	EA
CLEAN EXPANSION JOINT	41	LF
JOINT SEAL (MR 1")	41	LF
TREAT BRIDGE DECK	18,630	SQFT

NOTE:
THE CONTRACTOR SHALL VERIFY ALL CONTROLLING FIELD DIMENSIONS BEFORE ORDERING OR FABRICATING ANY MATERIAL.

DIST	COUNTY	ROUTE	POST MILES TOTAL PROJECT	SHEET No.	TOTAL SHEETS
05	SB	101,154,166, 192,217	Var	19	25

REGISTERED CIVIL ENGINEER 9-11-12 DATE

12-31-12
PLANS APPROVAL DATE

REGISTERED PROFESSIONAL ENGINEER
DIOSDADO ACOBA
No. 52003
Exp. 12-31-12
CIVIL
STATE OF CALIFORNIA

The State of California or its officers or agents shall not be responsible for the accuracy or completeness of electronic copies of this plan sheet.

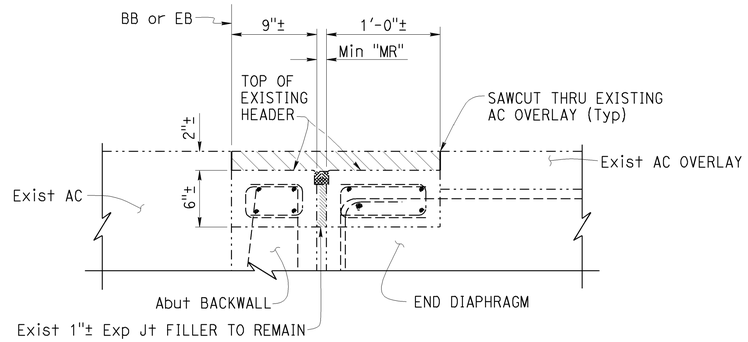

EXISTING

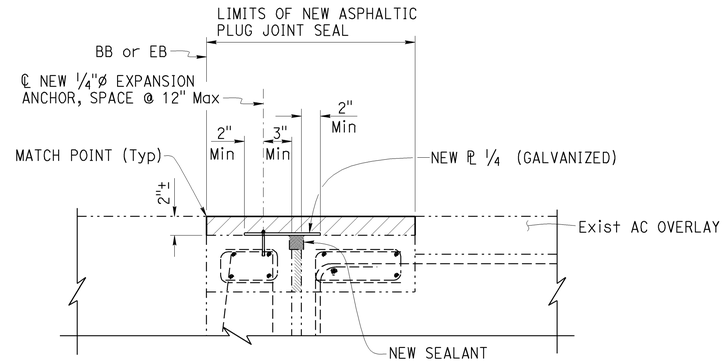

RECONSTRUCTION

SECTION A-A

1½" = 1'-0"

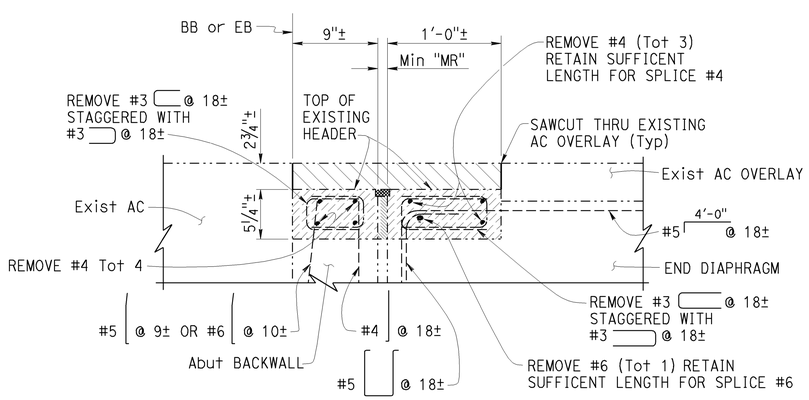

EXISTING

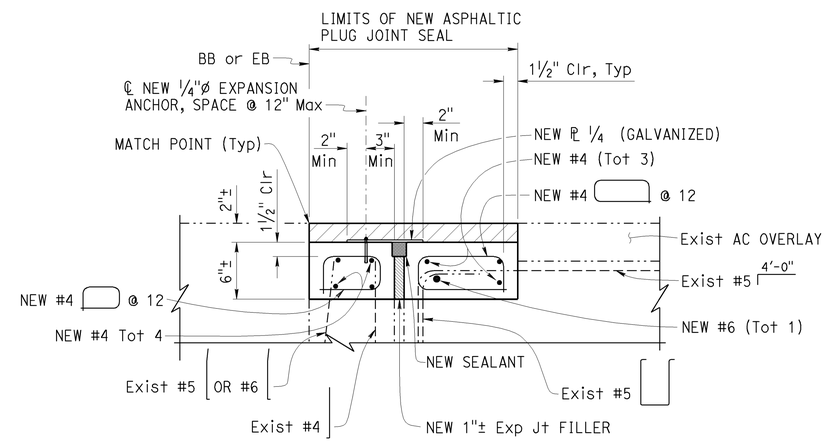

RECONSTRUCTION

SECTION B-B

1½" = 1'-0"

NOTES: (APPLY TO THIS SHEET ONLY)

Indicates limits of existing concrete removal and placement of new concrete. Retain all existing reinforcement, except where noted otherwise.

Indicates limits of remove existing AC overlay and prepare top of header surfaces.

Indicates limits of place new Asphaltic Plug Joint Seal.

NOTE:
THE CONTRACTOR SHALL VERIFY ALL CONTROLLING FIELD DIMENSIONS BEFORE ORDERING OR FABRICATING ANY MATERIAL.

	BY	CHECKED
DESIGN	M. Hashimoto	Matt Lee
DETAILS	Dale Kubochi	Matt Lee
QUANTITIES	M. Hashimoto	Matt Lee

STATE OF CALIFORNIA
DEPARTMENT OF TRANSPORTATION

DIVISION OF MAINTENANCE
STRUCTURE MAINTENANCE DESIGN

BRIDGE NO. VARIOUS
POST MILE VARIES

ROUTE 101, 154, 166, 192, 217 BRIDGES
JOINT SEAL DETAILS NO. 1

STRUCTURES MAINTENANCE DETAIL SHEET (ENGLISH) (REV. 09-01-10)

ORIGINAL SCALE IN INCHES FOR REDUCED PLANS 0 1 2 3

UNIT: 3488
PROJECT NUMBER & PHASE: 0512000023
CONTRACT NO.: 05-1A7901

DISREGARD PRINTS BEARING EARLIER REVISION DATES

REVISION DATES: 5-15-12

SHEET 9 OF 15

FILE => 05-1a7901-d-det01.dgn

USERNAME => s124428 DATE PLOTTED => 31-DEC-2012 TIME PLOTTED => 10:39

DIST	COUNTY	ROUTE	POST MILES TOTAL PROJECT	SHEET No.	TOTAL SHEETS
05	SB	101,154,166, 192,217	Var	20	25

REGISTERED CIVIL ENGINEER 9-11-12 DATE

12-31-12
PLANS APPROVAL DATE

REGISTERED PROFESSIONAL ENGINEER
DIOSDADO ACOBA
No. 52003
Exp. 12-31-12
CIVIL
STATE OF CALIFORNIA

The State of California or its officers or agents shall not be responsible for the accuracy or completeness of electronic copies of this plan sheet.

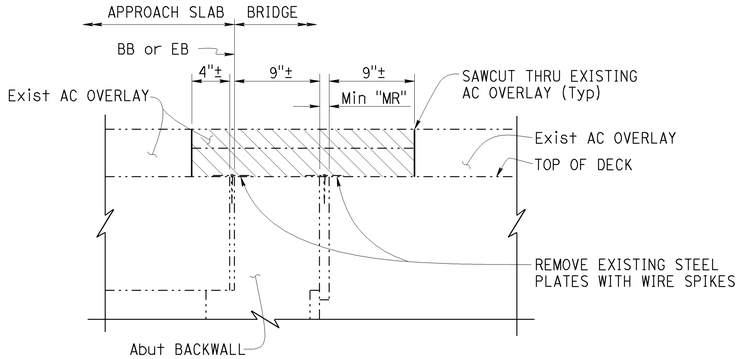

EXISTING

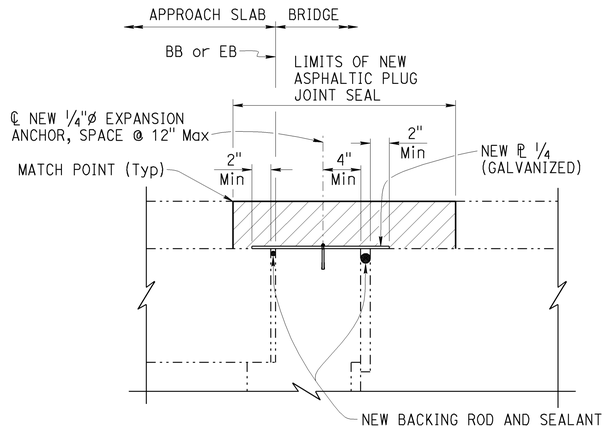

RECONSTRUCTION

SECTION C-C

1½" = 1'-0"

NOTES: (APPLY TO THIS SHEET ONLY)

Indicates limits of remove existing AC, Asphaltic Plug Joint Seal.

Indicates limits of place new Asphaltic Plug Joint Seal.

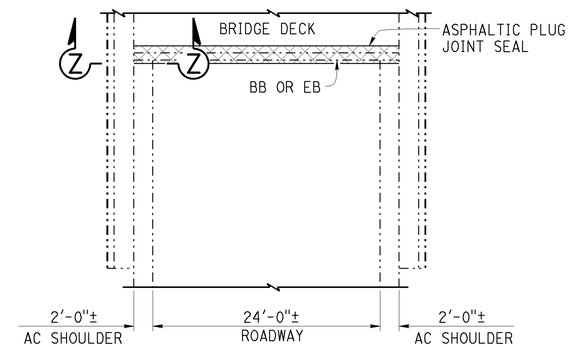

PLAN (JOINT END DETAIL)

1/6" = 1'-0"

Note: Detail shown for abutment only

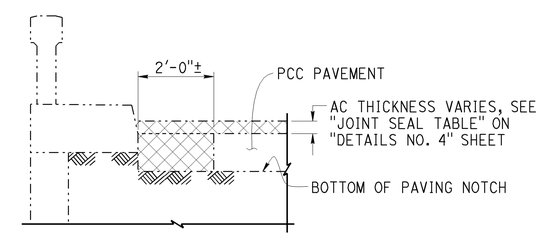

SECTION Z-Z

1/2" = 1'-0"

Note: Left side shown, right side similar

NOTE:
THE CONTRACTOR SHALL VERIFY ALL CONTROLLING FIELD DIMENSIONS BEFORE ORDERING OR FABRICATING ANY MATERIAL.

	BY	CHECKED
DESIGN	M. Hashimoto	Matt Lee
DETAILS	Dale Kubochi	Matt Lee
QUANTITIES	M. Hashimoto	Matt Lee

STATE OF CALIFORNIA
DEPARTMENT OF TRANSPORTATION

DIVISION OF MAINTENANCE
STRUCTURE MAINTENANCE DESIGN

BRIDGE NO. VARIOUS
POST MILE VARIES

ROUTE 101, 154, 166, 192, 217 BRIDGES
JOINT SEAL DETAILS NO. 2

STRUCTURES MAINTENANCE DETAIL SHEET (ENGLISH) (REV. 09-01-10)

ORIGINAL SCALE IN INCHES FOR REDUCED PLANS 0 1 2 3

UNIT: 3488
PROJECT NUMBER & PHASE: 0512000023
CONTRACT NO.: 05-1A7901

DISREGARD PRINTS BEARING EARLIER REVISION DATES

REVISION DATES 5-15-12

SHEET 10 OF 15

FILE => 05-1a7901-d-det02.dgn

USERNAME => s124428 DATE PLOTTED => 31-DEC-2012 TIME PLOTTED => 10:39

DIST	COUNTY	ROUTE	POST MILES TOTAL PROJECT	SHEET No.	TOTAL SHEETS
05	SB	101,154,166, 192,217	Var	21	25

REGISTERED CIVIL ENGINEER 9-11-12 DATE

12-31-12
PLANS APPROVAL DATE

REGISTERED PROFESSIONAL ENGINEER DIOSDADO ACOBA No. 52003 Exp. 12-31-12 CIVIL STATE OF CALIFORNIA

The State of California or its officers or agents shall not be responsible for the accuracy or completeness of electronic copies of this plan sheet.

NOTES: (APPLY TO THIS SHEET ONLY)

Indicates limits of remove existing AC.

Indicates limits of place new Asphaltic Plug Joint Seal.

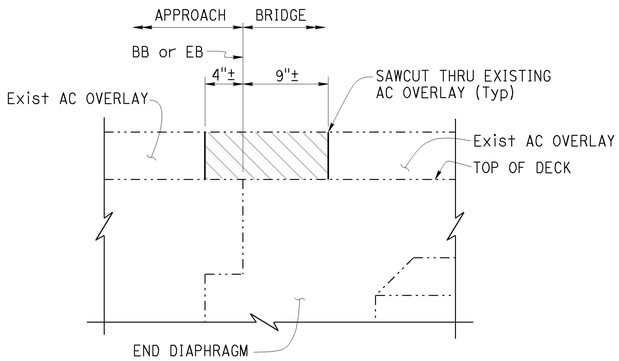

EXISTING

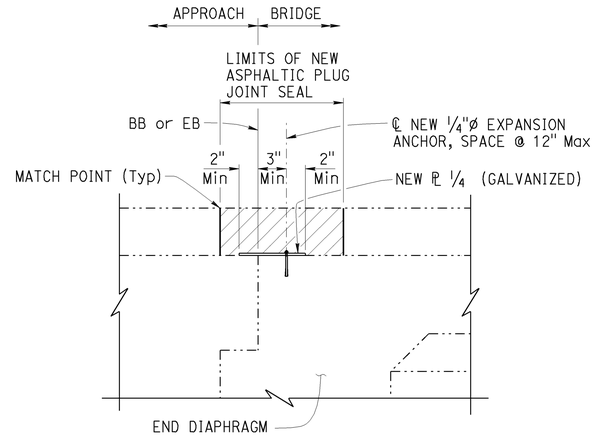

RECONSTRUCTION

SECTION E-E

1½" = 1'-0"

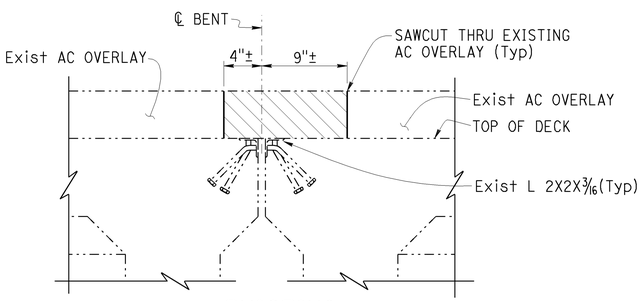

EXISTING

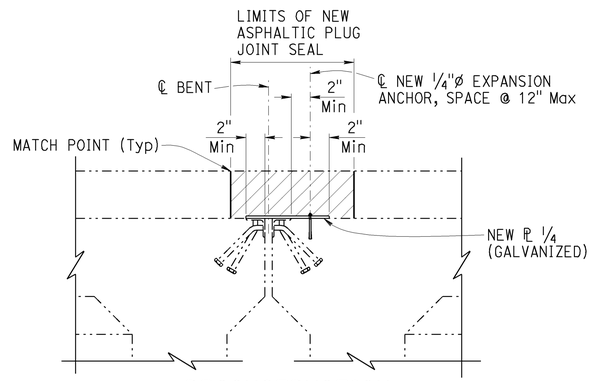

RECONSTRUCTION

SECTION F-F

1½" = 1'-0"

NOTE:
THE CONTRACTOR SHALL VERIFY ALL CONTROLLING FIELD DIMENSIONS BEFORE ORDERING OR FABRICATING ANY MATERIAL.

	BY	CHECKED
DESIGN	M. Hashimoto	Matt Lee
DETAILS	Dale Kubochi	Matt Lee
QUANTITIES	M. Hashimoto	Matt Lee

STATE OF CALIFORNIA
DEPARTMENT OF TRANSPORTATION

DIVISION OF MAINTENANCE
STRUCTURE MAINTENANCE DESIGN

BRIDGE NO. VARIOUS
POST MILE VARIES

ROUTE 101, 154, 166, 192, 217 BRIDGES
JOINT SEAL DETAILS NO. 3

STRUCTURES MAINTENANCE DETAIL SHEET (ENGLISH) (REV. 09-01-10)

ORIGINAL SCALE IN INCHES FOR REDUCED PLANS 0 1 2 3

UNIT: 3488
PROJECT NUMBER & PHASE: 0512000023
CONTRACT NO.: 05-1A7901

DISREGARD PRINTS BEARING EARLIER REVISION DATES

REVISION DATES 5-15-12

SHEET 11 OF 15

FILE => 05-1a7901-d-det03.dgn

USERNAME => s124428 DATE PLOTTED => 31-DEC-2012 TIME PLOTTED => 10:39

DIST	COUNTY	ROUTE	POST MILES TOTAL PROJECT	SHEET No.	TOTAL SHEETS
05	SB	101,154,166, 192,217	Var	22	25

REGISTERED CIVIL ENGINEER 9-11-12 DATE

12-31-12
PLANS APPROVAL DATE

REGISTERED PROFESSIONAL ENGINEER DIOSDADO ACOBA No. 52003 Exp. 12-31-12 CIVIL STATE OF CALIFORNIA

The State of California or its officers or agents shall not be responsible for the accuracy or completeness of electronic copies of this plan sheet.

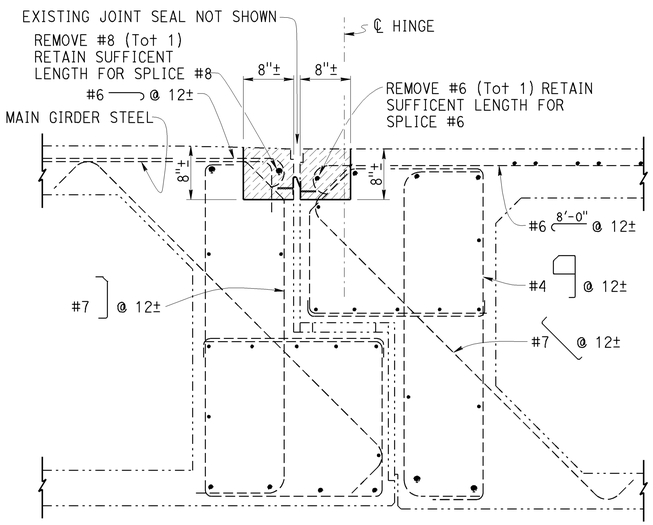

EXISTING

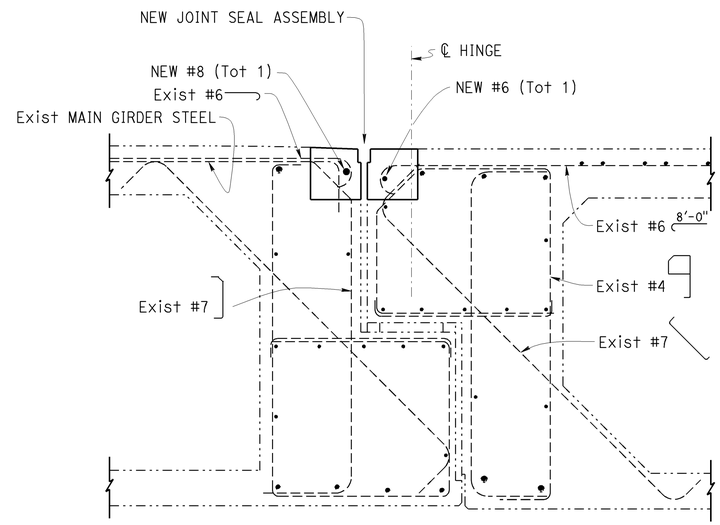

RECONSTRUCTION

SECTION G-G

1" = 1'-0"

NOTES: (APPLY TO THIS SHEET ONLY)

Indicates limits of existing concrete removal and placement of new concrete. Retain all existing reinforcement, except where noted otherwise.

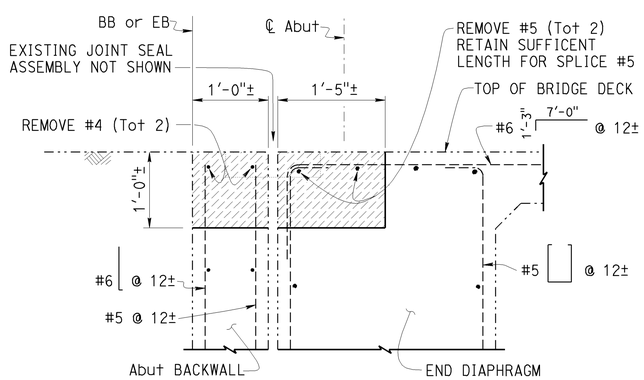

EXISTING

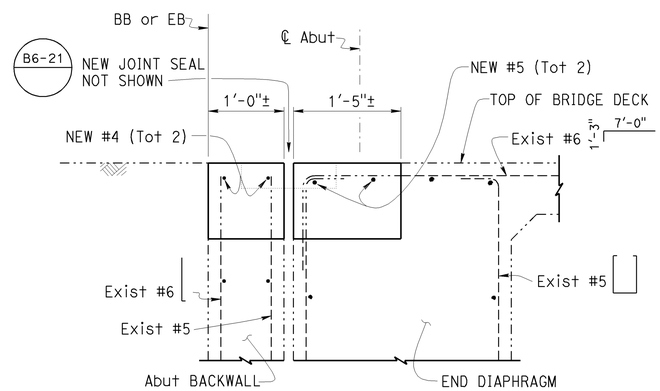

RECONSTRUCTION

SECTION H-H

1" = 1'-0"

NOTE:
THE CONTRACTOR SHALL VERIFY ALL CONTROLLING FIELD DIMENSIONS BEFORE ORDERING OR FABRICATING ANY MATERIAL.

	BY	CHECKED
DESIGN	M. Hashimoto	Matt Lee
DETAILS	Dale Kubochi	Matt Lee
QUANTITIES	M. Hashimoto	Matt Lee

STATE OF CALIFORNIA
DEPARTMENT OF TRANSPORTATION

DIVISION OF MAINTENANCE
STRUCTURE MAINTENANCE DESIGN

BRIDGE NO. VARIOUS
POST MILE VARIES

ROUTE 101, 154, 166, 192, 217 BRIDGES
JOINT SEAL DETAILS NO. 4

STRUCTURES MAINTENANCE DETAIL SHEET (ENGLISH) (REV. 09-01-10)

ORIGINAL SCALE IN INCHES FOR REDUCED PLANS 0 1 2 3

UNIT: 3488
PROJECT NUMBER & PHASE: 0512000023
CONTRACT NO.: 05-1A7901

DISREGARD PRINTS BEARING EARLIER REVISION DATES

REVISION DATES 5-15-12 8-27-12 8-7-12

SHEET 12 OF 15

FILE => 05-1a7901-d-det04.dgn

USERNAME => s124428 DATE PLOTTED => 31-DEC-2012 TIME PLOTTED => 10:39

DIST	COUNTY	ROUTE	POST MILES TOTAL PROJECT	SHEET No.	TOTAL SHEETS
05	SB	101,154,166, 192,217	Var	23	25

REGISTERED CIVIL ENGINEER 9-11-12 DATE

12-31-12
PLANS APPROVAL DATE

REGISTERED PROFESSIONAL ENGINEER DIOSDADO ACOBA No. 52003 Exp. 12-31-12 CIVIL STATE OF CALIFORNIA

The State of California or its officers or agents shall not be responsible for the accuracy or completeness of electronic copies of this plan sheet.

JOINT SEAL TABLE

BRIDGE NAME	BRIDGE NUMBER	LOCATION		MINIMUM "MR" (INCHES)	APPROXIMATE LENGTH (FEET)	EXISTING WATERSTOP	APPROX DEPTH TO CLEAN EXP JOINT (INCHES)
NOJOQUI CREEK	51-0020L/R	Abut 1 (SB) ✳	BW	½	47	NO	
		Abut 4 (SB) ✳	BW	1	43	NO	
		Abut 1 (NB) ✳	BB	½	47	NO	
		Abut 1 (NB) ✳	BW	1	47	NO	
		Abut 5 (NB) ✳	BW	½	41	NO	
		Abut 5 (NB) ✳	EB	½	41	NO	
NOJOQUI CREEK	51-0074L/R	Abut 1 (SB) ✳	BB	½	32	NO	
		Abut 1 (SB) ✳	BW	½	32	NO	
		Abut 4 (SB) ✳	BW	1	32	NO	
		Abut 4 (SB) ✳	EB	½	32	NO	
		Abut 1 (NB) ✳	BB	½	32	NO	
		Abut 1 (NB) ✳	BW	½	32	NO	
		Abut 4 (NB) ✳	BW	1	32	NO	
		Abut 4 (NB) ✳	EB	½	32	NO	
NOJOQUI CREEK	51-0019L	Abut 1 ✳	BB	½	28	NO	
		Abut 1 ✳	BW	½	28	NO	
		Abut 4 ✳	BW	½	28	NO	
		Abut 4 ✳	EB	½	28	NO	
NOJOQUI CREEK	51-0018L/R	Abut 1 (SB) ✳	BB	½	40	NO	
		Abut 1 (SB) ✳	BW	½	40	NO	
		Abut 5 (SB) ✳	BW	1	40	NO	
		Abut 5 (SB) ✳	EB	½	40	NO	
		Abut 1 (NB) ✳	BB	½	44	NO	
		Bent 2 (NB) ✳	JT	½	43.5	NO	
		Bent 3 (NB) ✳	JT	½	43.5	NO	
		Bent 4 (NB) ✳	JT	½	43.5	NO	
		Abut 5 (NB) ✳	EB	½	43.5	NO	
CUYAMA RIVER	51-0218	Abut 1	BW	1	33	YES	8
		Abut 4	BW	1	33	YES	8
CUYAMA RIVER	51-0041	Abut 1	BW	2	33	YES	6
		Abut 5	BW	1½	33	YES	6
CUYAMA RIVER	51-0066	Hinge near Pier 4	H	3	38.5	YES	8
SAN ROQUE CANYON	51-0104	Abut 1	BW	2	35	NO	12
		Abut 4	BW	1½	35	NO	12
E217-S101 CONNECTOR	51-0297G	Abut 7	BW	1	41	NO	9

LEGEND:

BW - Abutment backwall joint
BB - Paving Notch at beginning of bridge
EB - Paving Notch at end of bridge
JT - Expansion Joint
H - Hinge Joint
✳ - Asphaltic Plug Joint Seal

NOTE:
THE CONTRACTOR SHALL VERIFY ALL CONTROLLING FIELD DIMENSIONS BEFORE ORDERING OR FABRICATING ANY MATERIAL.

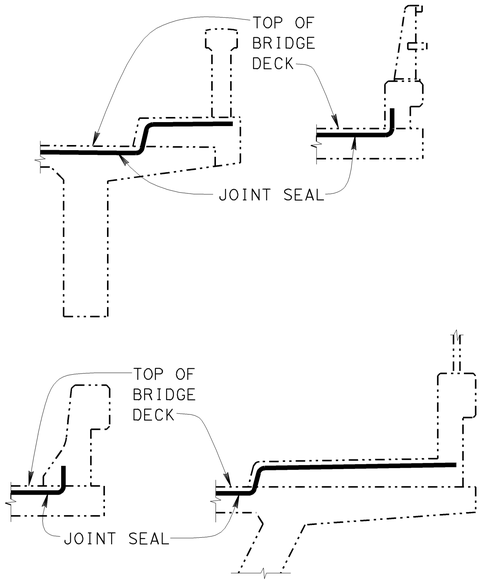

BARRIER RAIL

JOINT SEAL AT LOW SIDE OF DECK

Notes: Details shown for illustration purposes only. For use only where deck joint matches the sidewalk, curb or barrier rail joint.

The following notes apply to JOINT SEAL TYPE B:

1) Seal must satisfy both minimum Movement Rating (MR) and minimum W1 requirements.
2) Minimum W1 is the calculated maximum width of the joint based on field measurements. After the joints have been cleaned, minimum W1 is to be calculated by the Engineer.
3) W1 shall be the smaller of the values determined as follows:
   A) 0.85 times the manufacturer's designed minimum uncompressed width of the seal.
   B) The width of the seal on the third successive test cycle of the pressure deflection test, when compressed to an average pressure of 3 psi.
4) Bend Type B joint seal 6" up into curb or rail on the low side of the deck where deck joint matches curb or rail joint.
5) For details not shown, see RSP B6-21

The following notes apply to JOINT SEAL TYPE A:

1) Install Type A joint seal 3" up into rail on the low side of deck where joint matches curb or rail joint.
2) For details not shown, see RSP B6-21

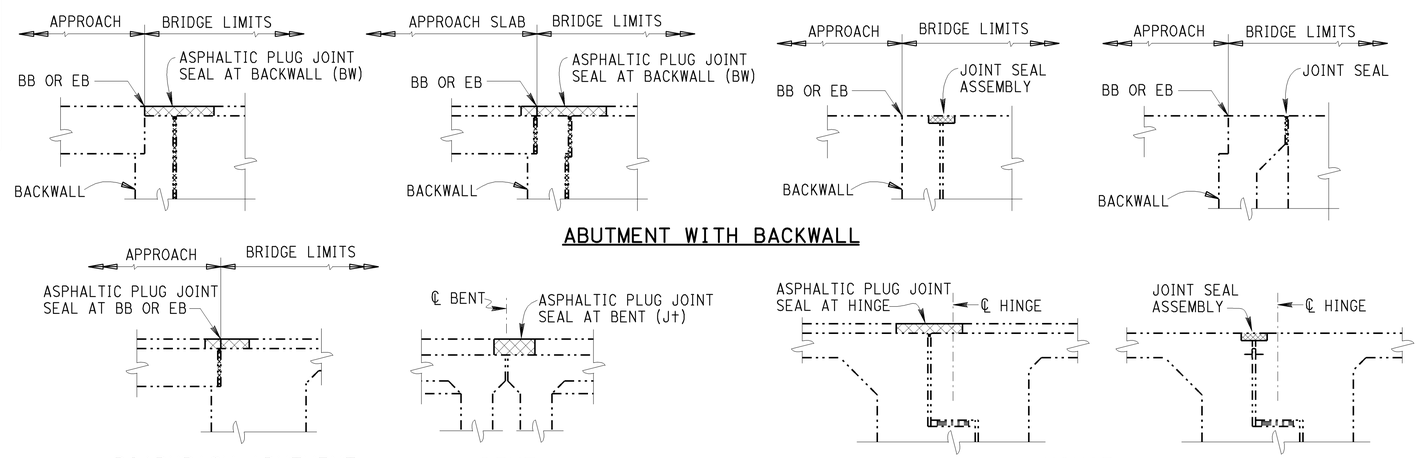

ABUTMENT WITH BACKWALL

DIAPHRAGM ABUTMENT

BENT

HINGE

JOINT SEAL LOCATION

DESIGN	BY M. Hashimoto	CHECKED Matt Lee	
DETAILS	BY Dale Kubochi	CHECKED Matt Lee	
QUANTITIES	BY M. Hashimoto	CHECKED Matt Lee	

STATE OF CALIFORNIA
DEPARTMENT OF TRANSPORTATION

DIVISION OF MAINTENANCE
STRUCTURE MAINTENANCE DESIGN

BRIDGE NO. VARIOUS
POST MILE VARIES

ROUTE 101, 154, 166, 192, 217 BRIDGES
JOINT SEAL DETAILS NO. 5

STRUCTURES MAINTENANCE DETAIL SHEET (ENGLISH) (REV. 09-01-10)

ORIGINAL SCALE IN INCHES FOR REDUCED PLANS 0 1 2 3

UNIT: 3488
PROJECT NUMBER & PHASE: 0512000023
CONTRACT NO.: 05-1A7901

DISREGARD PRINTS BEARING EARLIER REVISION DATES

REVISION DATES 5-16-12 8-3-12

SHEET 13 OF 15

FILE => 05-1a7901-d-det05.dgn

USERNAME => s124428 DATE PLOTTED => 31-DEC-2012 TIME PLOTTED => 10:39

DIST	COUNTY	ROUTE	POST MILES TOTAL PROJECT	SHEET No.	TOTAL SHEETS
05	SB	101,154,166, 192,217	Var	24	25

REGISTERED CIVIL ENGINEER 9-11-12 DATE

12-31-12
PLANS APPROVAL DATE

REGISTERED PROFESSIONAL ENGINEER
DIOSDADO ACOBA
No. 52003
Exp. 12-31-12
CIVIL
STATE OF CALIFORNIA

The State of California or its officers or agents shall not be responsible for the accuracy or completeness of electronic copies of this plan sheet.

GENERAL NOTES
LOAD FACTOR DESIGN

DESIGN: BRIDGE DESIGN SPECIFICATIONS
(1996 AASHTO with Interims and Revisions by CALTRANS)

DEAD LOAD: Includes 35 psf for future wearing surface.
LIVE LOADING: HS20-44 and alternative and permit design load.

REINFORCED CONCRETE: fy = 60,000 psi
f'c = 4,000 psi
n = 9

TEMPORARY DECK PLATE LOAD CRITERIA

MOMENT DEMAND/FOOT (kips-ft/ft)	BOLT SHEAR/FOOT (kips/ft)	BOLT TENSION (kips) / bolt
15.6	7.8	10.4

Plate deflection shall not exceed s/12 inches (s = span of plate).
Maximum anchor bolt spacing = 1'-0".

DECK REPAIR TABLE
REMOVE UNSOUND CONCRETE AND RAPID SETTING CONCRETE (PATCH)

BRIDGE NAME	BRIDGE NUMBER	APPROXIMATE AREA DAMAGED (PERCENT)	APPROXIMATE DEPTH (INCHES)
CUYAMA RIVER	51-0041	1	3

Locations to be determined by the Engineer. For details see "DECK REPAIR DETAIL - OVERLAY".

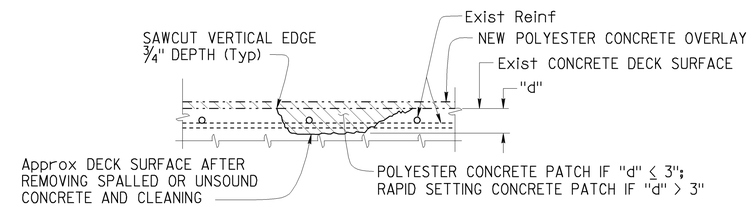

DECK REPAIR DETAIL - OVERLAY

Note: Locations to be determined by the Engineer.
Reinforcement may be encountered during
deck concrete removal.

NO SCALE

NOTE:
THE CONTRACTOR SHALL VERIFY ALL
CONTROLLING FIELD DIMENSIONS
BEFORE ORDERING OR FABRICATING
ANY MATERIAL.

	BY	CHECKED
DESIGN	M. Hashimoto	Matt Lee
DETAILS	Dale Kubochi	Matt Lee
QUANTITIES	M. Hashimoto	Matt Lee

STATE OF CALIFORNIA
DEPARTMENT OF TRANSPORTATION

DIVISION OF MAINTENANCE
STRUCTURE MAINTENANCE DESIGN

BRIDGE NO. VARIOUS
POST MILE VARIES

ROUTE 101, 154, 166, 192, 217 BRIDGES
JOINT SEAL DETAILS NO. 6

STRUCTURES MAINTENANCE DETAIL SHEET (ENGLISH) (REV. 09-01-10)

ORIGINAL SCALE IN INCHES FOR REDUCED PLANS 0 1 2 3

UNIT: 3488
PROJECT NUMBER & PHASE: 0512000023
CONTRACT NO.: 05-1A7901

DISREGARD PRINTS BEARING EARLIER REVISION DATES

REVISION DATES: 5-1-12, 8-3-12

SHEET 14 OF 15

FILE => 05-1a7901-d-det06.dgn

USERNAME => s124428 DATE PLOTTED => 31-DEC-2012 TIME PLOTTED => 10:39

DIST	COUNTY	ROUTE	POST MILES TOTAL PROJECT	SHEET No.	TOTAL SHEETS
05	SB	101,154,166, 192,217	Var	25	25

REGISTERED CIVIL ENGINEER 9-11-12 DATE

12-31-12
PLANS APPROVAL DATE

REGISTERED PROFESSIONAL ENGINEER DIOSDADO ACOBA No. 52003 Exp. 12-31-12 CIVIL STATE OF CALIFORNIA

The State of California or its officers or agents shall not be responsible for the accuracy or completeness of electronic copies of this plan sheet.

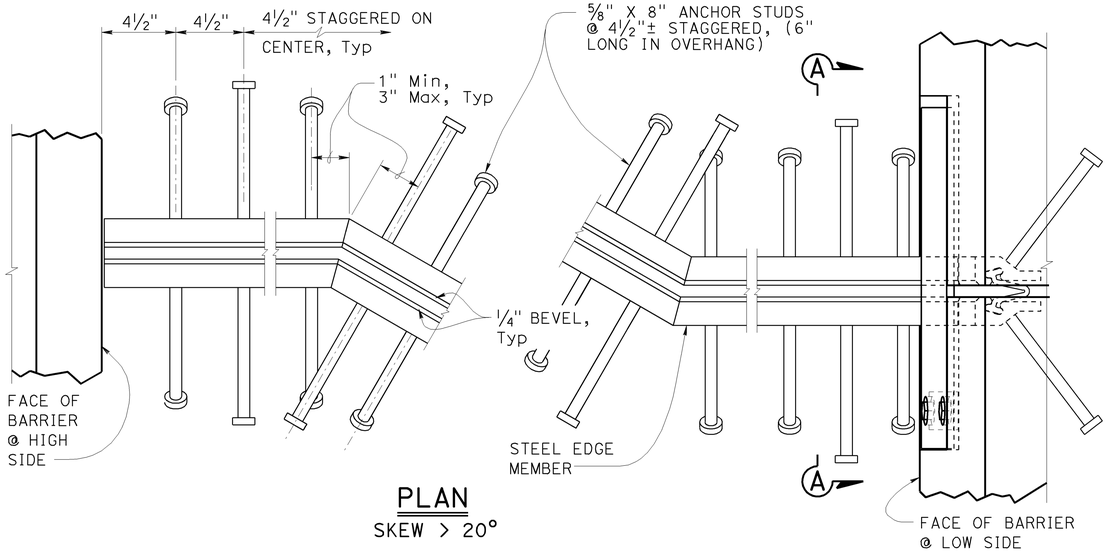

PLAN
SKEW > 20°

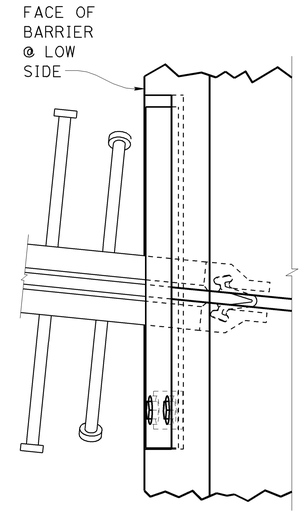

PLAN
SKEW ≤ 20°

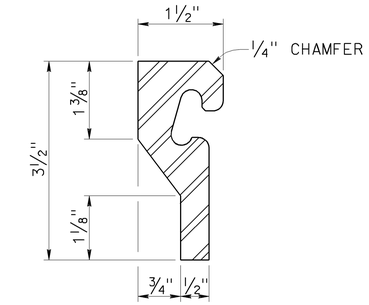

STEEL EDGE MEMBER

NOTES:

1. Full penetration butt welds may be substituted for fillet welds on all anchor studs
2. Alternate types of anchor studs may be permitted subject to the approval by the Engineer
3. Joint seal assembly to be used in conjunction with closure pour. (See other sheets for limits). Closure pour shall not be placed until final deck surface is within the tolerances specified
4. Use joint at crown of roadway, at any change in traverse slope in deck and at changes in horizontal direction. Place other joints at or near lanes. All metal parts to be painted or galvanized after fabrication
5. Sheet Neoprene shall be fabricated in one continuous piece and shall be fabricated to bend around corners
6. Insert assembly or expansion anchorage for ⅝" x 1¾" bolts. Use installation bolts extended ½" minimum past nut and coat with bond breaker, after concrete has cured, remove installation bolts, install A325 bolts and sheet neoprene
7. Sidewalk Detail similar to Barrier Detail on low side at both sides if the roadway is crowned or if the difference in elevation between the ends of the seal is 0.5′ or less
8. a_C, a_S, are the thermal expansion coefficients for concrete and steel respectfully.

JOINT INFORMATION			"a" DIMENSIONS		
LOCATION	MOVEMENT RATING (MR)	SKEW	WINTER	SPRING & FALL	SUMMER
HINGE	3"	19°	3¾"	2"	½"

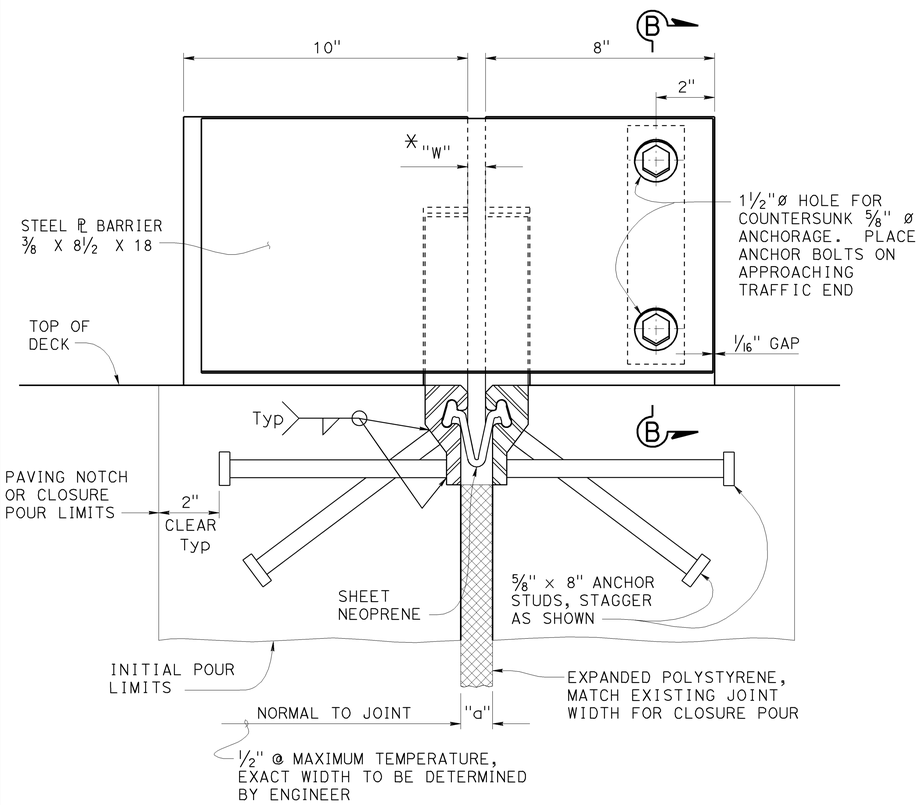

SECTION A-A

✳ TO SET MINIMUM JOINT OPENING "W"

"W" = ½"+[(Max Str temperature in F°)-(actual Str temperature in F°)]✳(a_C or a_S)(12)(contributory L in feet)

½" Minimum
a_C = 0.0000060
a_S = 0.0000065

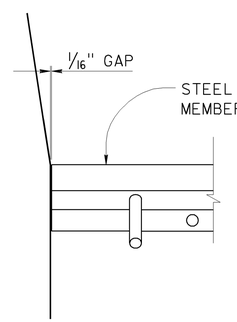

BARRIER DETAIL
HIGH SIDE

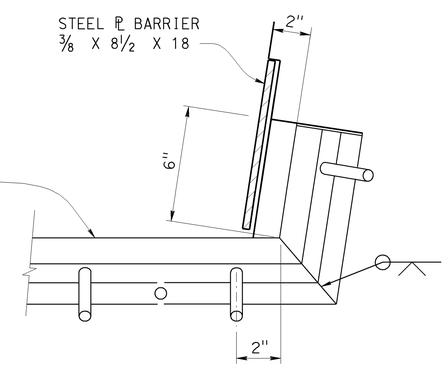

BARRIER DETAIL
LOW SIDE

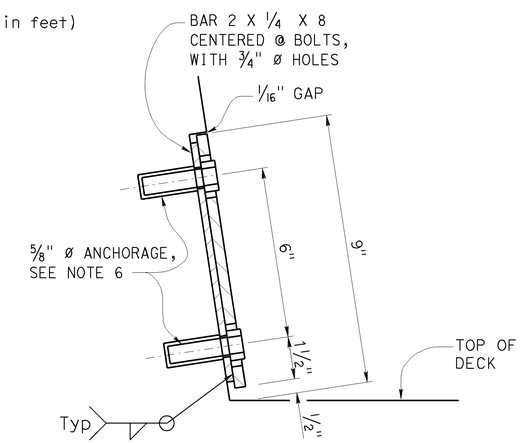

SECTION B-B

NO SCALE

ROUTE 101, 154,166,192,217 BRIDGES

JOINT SEAL ASSEMBLY

MAXIMUM MOVEMENT RATING = 4"

STANDARD DRAWING

FILE NO. **xs8-010**

APPROVAL DATE October 2011

STATE OF **CALIFORNIA** DEPARTMENT OF TRANSPORTATION

DIVISION OF ENGINEERING SERVICES

BRIDGE NO. VARIOUS

POST MILE VARIES

DS OSD 2147A (ENGLISH STANDARD DRAWING "XS" BORDER REV. (02-02-11)

ORIGINAL SCALE IN INCHES FOR REDUCED PLANS 0 1 2 3

UNIT: 3488
PROJECT NUMBER & PHASE: 0512000023
CONTRACT NO.: 05-1A7901

DISREGARD PRINTS BEARING EARLIER REVISION DATES

REVISION DATES 5-1-12 8-3-12

SHEET 15 OF 15

FILE => 05-1a7901-j-jt-seal-assem.dgn

USERNAME => s124428 DATE PLOTTED => 31-DEC-2012 TIME PLOTTED => 10:39