INDEX OF PLANS

SHEET No.	DESCRIPTION
1	TITLE AND LOCATION MAP
2	TYPICAL CROSS SECTIONS
3-9	LAYOUT
10	CONSTRUCTION DETAILS
11-14	DRAINAGE PROFILES
15-16	DRAINAGE DETAILS
17	DRAINAGE QUANTITIES
18	CONSTRUCTION AREA SIGNS
19	SUMMARY OF QUANTITIES
20-26	EROSION CONTROL
27	PLANT LIST
28	PLANTING
29	IRRIGATION PLAN
30-45	REVISED AND NEW STANDARD PLANS

THE STANDARD PLANS LIST APPLICABLE TO THIS CONTRACT IS INCLUDED IN THE NOTICE TO BIDDERS AND SPECIAL PROVISIONS BOOK.

STATE OF CALIFORNIA

DEPARTMENT OF TRANSPORTATION

ACNH-Q101(216)E

Dist	COUNTY	ROUTE	POST MILES TOTAL PROJECT	SHEET No.	TOTAL SHEETS
05	SB	101	78.4/82.2	1	45

PROJECT PLANS FOR CONSTRUCTION ON

STATE HIGHWAY

IN SANTA BARBARA COUNTY NEAR SANTA MARIA FROM 0.3 MILE SOUTH OF SOLOMON SUMMIT UNDERCROSSING TO CLARK AVENUE OVERCROSSING

TO BE SUPPLEMENTED BY STANDARD PLANS DATED MAY 2006

LOCATION MAP

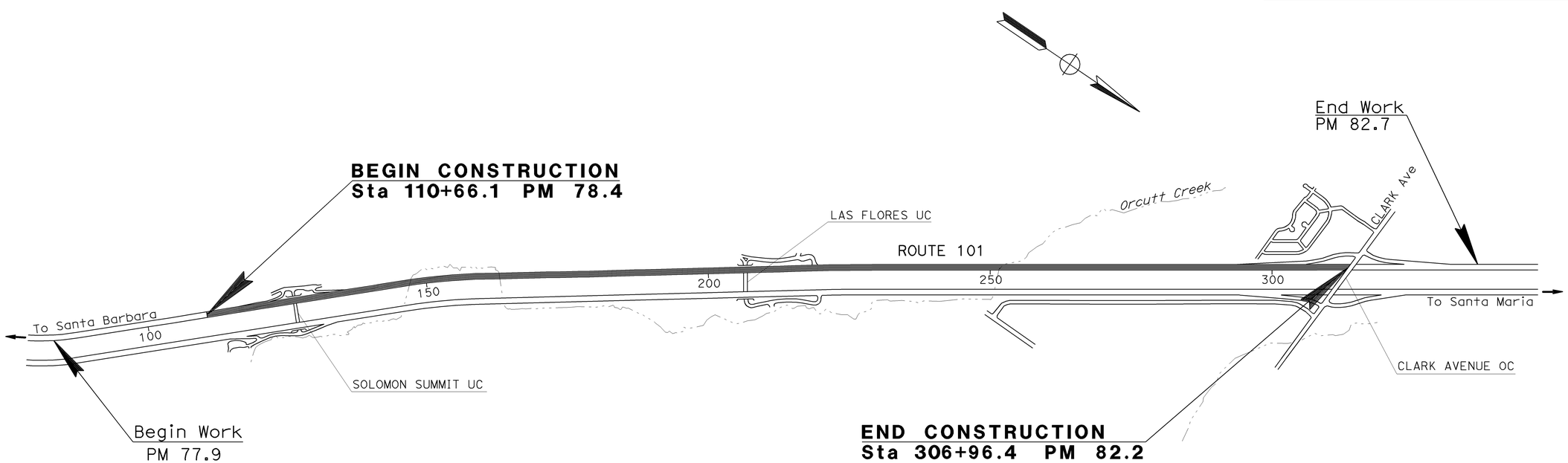

NO SCALE

PROJECT MANAGER: AMY DONATELLO

DESIGN ENGINEER: STEVE WYATT

THE CONTRACTOR SHALL POSSESS THE CLASS (OR CLASSES) OF LICENSE AS SPECIFIED IN THE "NOTICE TO BIDDERS."

1-27-12
PROJECT ENGINEER — DATE
REGISTERED CIVIL ENGINEER

REGISTERED PROFESSIONAL ENGINEER — SCOTT D. KIRKISH — No. 76829 — Exp. 12/31/12 — CIVIL — STATE OF CALIFORNIA

January 30, 2012
PLANS APPROVAL DATE

THE STATE OF CALIFORNIA OR ITS OFFICERS OR AGENTS SHALL NOT BE RESPONSIBLE FOR THE ACCURACY OR COMPLETENESS OF SCANNED COPIES OF THIS PLAN SHEET.

CONTRACT No.	05-1A2204
PROJECT ID	0500020303

LAST REVISION 01-27-12
DATE PLOTTED => 07-FEB-2012
TIME PLOTTED => 15:47

BORDER LAST REVISED 7/2/2010 | CALTRANS WEB SITE IS: HTTP//WWW.DOT.CA.GOV/ | RELATIVE BORDER SCALE IS IN INCHES 0 1 2 3 | USERNAME => s118989 DGN FILE => 0500020303ab001.dgn | UNIT 1450 | PROJECT NUMBER & PHASE 05000203031

Dist	COUNTY	ROUTE	POST MILES TOTAL PROJECT	SHEET No.	TOTAL SHEETS
05	SB	101	78.4/82.2	2	45

1-27-12
REGISTERED CIVIL ENGINEER DATE

1-30-12
PLANS APPROVAL DATE

SCOTT D. KIRKISH No. 76829 Exp. 12/31/12 CIVIL — REGISTERED PROFESSIONAL ENGINEER — STATE OF CALIFORNIA

THE STATE OF CALIFORNIA OR ITS OFFICERS OR AGENTS SHALL NOT BE RESPONSIBLE FOR THE ACCURACY OR COMPLETENESS OF SCANNED COPIES OF THIS PLAN SHEET.

NOTE:

DIMENSIONS OF THE PAVEMENT STRUCTURES (STRUCTURAL SECTIONS) ARE SUBJECT TO TOLERANCES SPECIFIED IN THE STANDARD SPECIFICATIONS.

DESIGN DESIGNATION

PM 78.4 TO 81.8		PM 81.8 TO 82.2	
ADT (2009)	29,000	ADT (2009)	38,000
ADT (2033)	39,644	ADT (2033)	52,696
DHV (2009)	3,300	DHV (2009)	4,200
DHV (2033)	3,909	DHV (2033)	5,362
D	60%	D	55%
T	3%	T	5%
% TRUCKS	12%	% TRUCKS	8%
TI (Shld, 2033)	8	TI (Shld, 2033)	8

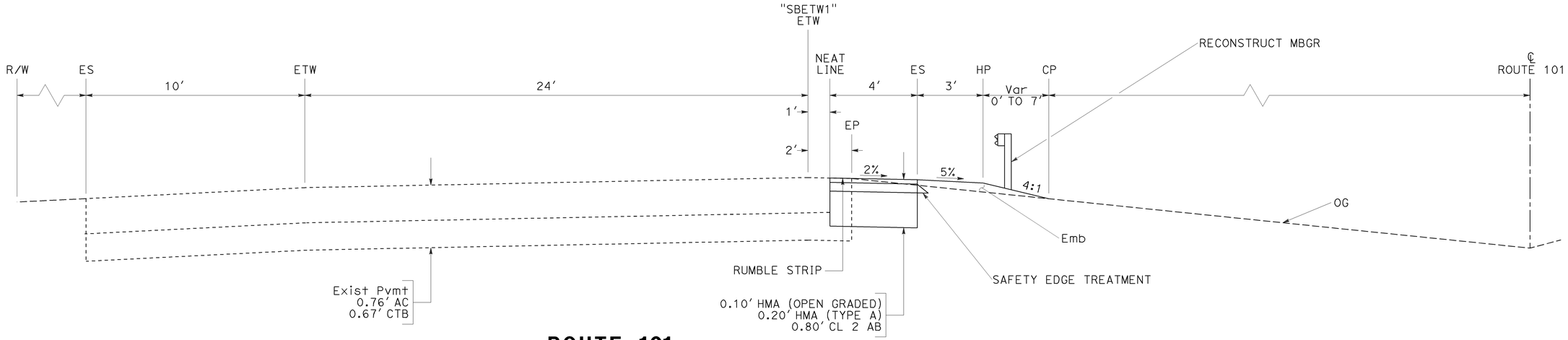

ROUTE 101
SOUTHBOUND
Sta 298+87 TO 304+50

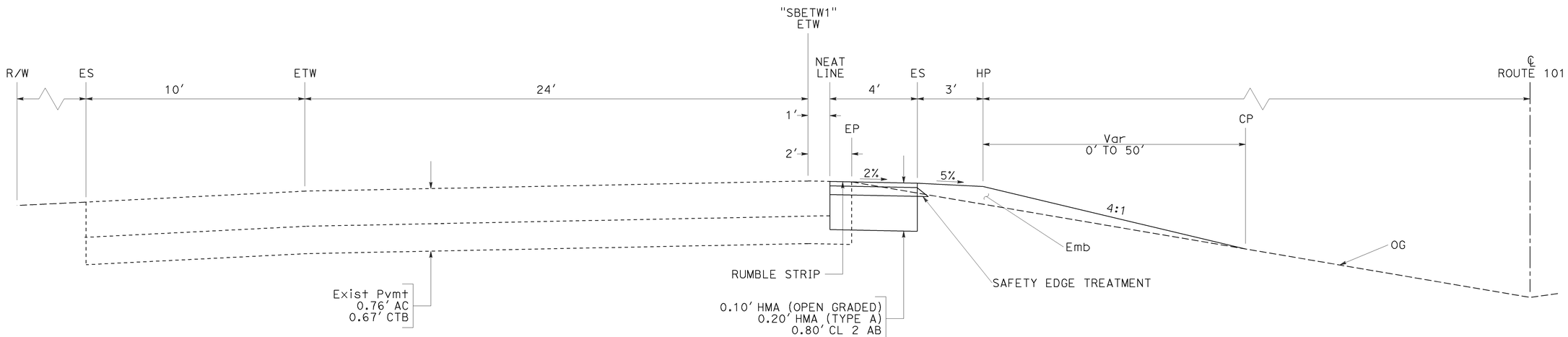

ROUTE 101
SOUTHBOUND
Sta 110+66.1 TO 298+87
Sta 304+50 TO 306+96.4

TYPICAL CROSS SECTIONS

NO SCALE **X-1**

REVISED BY | DATE REVISED
SCOTT KIRKISH | STEVE WYATT
CALCULATED-DESIGNED BY | CHECKED BY
FUNCTIONAL SUPERVISOR: STEVE WYATT
STATE OF CALIFORNIA - DEPARTMENT OF TRANSPORTATION
DESIGN
Caltrans

LAST REVISION | DATE PLOTTED => 07-FEB-2012
01-27-12 | TIME PLOTTED => 13:47

Dist	COUNTY	ROUTE	POST MILES TOTAL PROJECT	SHEET No.	TOTAL SHEETS
05	SB	101	78.4/82.2	3	45

REGISTERED CIVIL ENGINEER — DATE 1-27-12

PLANS APPROVAL DATE 1-30-12

REGISTERED PROFESSIONAL ENGINEER — SCOTT D. KIRKISH — No. 76829 — Exp. 12/31/12 — CIVIL — STATE OF CALIFORNIA

THE STATE OF CALIFORNIA OR ITS OFFICERS OR AGENTS SHALL NOT BE RESPONSIBLE FOR THE ACCURACY OR COMPLETENESS OF SCANNED COPIES OF THIS PLAN SHEET.

NOTE:

FOR ACCURATE RIGHT OF WAY DATA, CONTACT RIGHT OF WAY ENGINEERING AT DISTRICT OFFICE.

LEGEND

- X — DRAINAGE SYSTEM No.
- (X) — DRAINAGE UNIT No.
- L-1 — OBJECT MARKER (TYPE L-1)
- RL-1 — RESET OBJECT MARKER (TYPE L-1)
- F — DELINEATOR CLASS-1 (TYPE F)

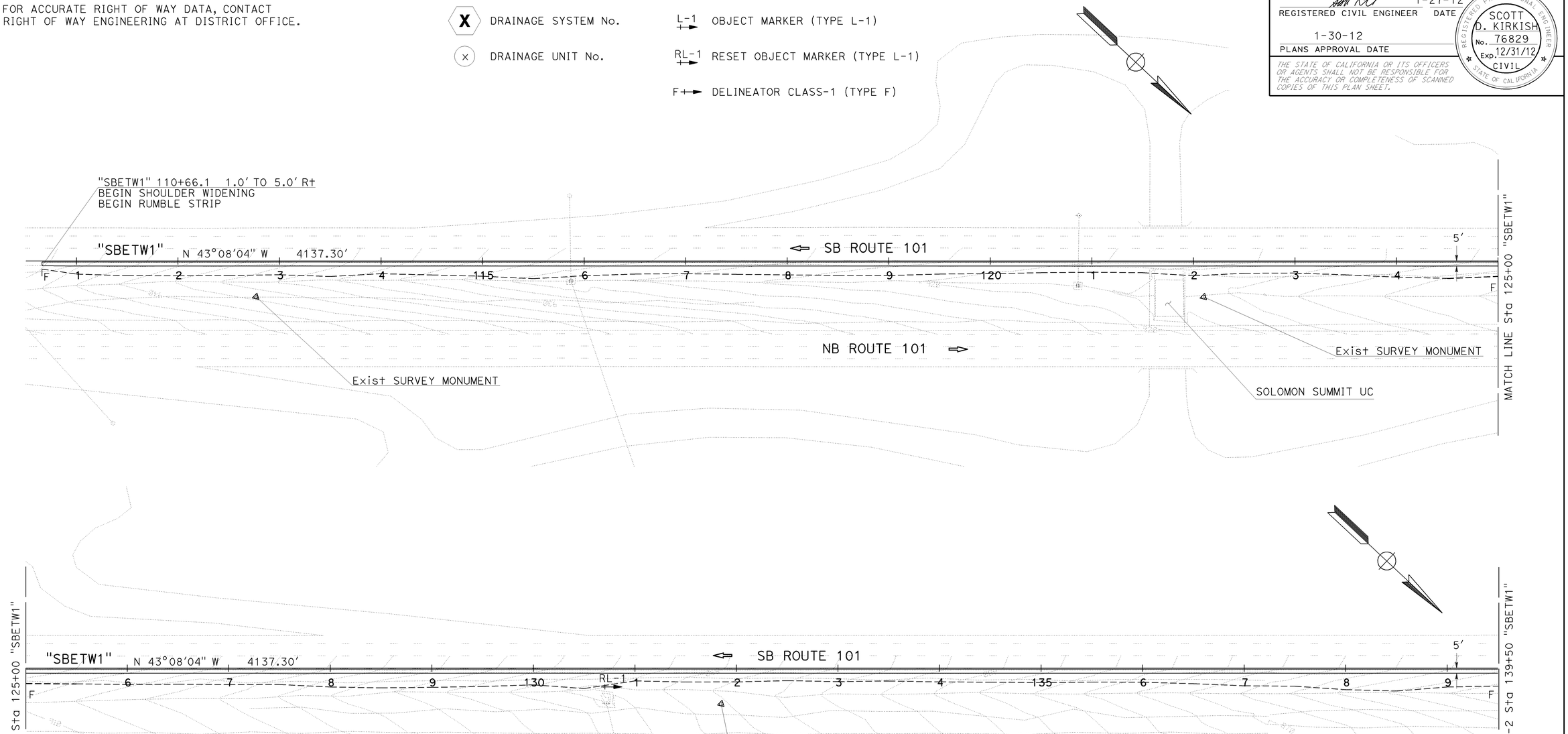

LAYOUT

SCALE : 1" = 50'

L-1

REVISED BY | DATE REVISED

SCOTT KIRKISH | STEVE WYATT

CALCULATED-DESIGNED BY | CHECKED BY

FUNCTIONAL SUPERVISOR: STEVE WYATT

STATE OF CALIFORNIA - DEPARTMENT OF TRANSPORTATION

DESIGN

Caltrans

LAST REVISION | DATE PLOTTED => 07-FEB-2012
01-27-12 | TIME PLOTTED => 13:47

BORDER LAST REVISED 7/2/2010

USERNAME => s118989
DGN FILE => 0500020303ea001.dgn

RELATIVE BORDER SCALE IS IN INCHES 0 1 2 3

UNIT 1450

PROJECT NUMBER & PHASE 05000203031

Dist	COUNTY	ROUTE	POST MILES TOTAL PROJECT	SHEET No.	TOTAL SHEETS
05	SB	101	78.4/82.2	4	45

REGISTERED CIVIL ENGINEER — DATE 1-27-12

PLANS APPROVAL DATE 1-30-12

REGISTERED PROFESSIONAL ENGINEER — SCOTT D. KIRKISH — No. 76829 — Exp. 12/31/12 — CIVIL — STATE OF CALIFORNIA

THE STATE OF CALIFORNIA OR ITS OFFICERS OR AGENTS SHALL NOT BE RESPONSIBLE FOR THE ACCURACY OR COMPLETENESS OF SCANNED COPIES OF THIS PLAN SHEET.

NOTE:

FOR ACCURATE RIGHT OF WAY DATA, CONTACT RIGHT OF WAY ENGINEERING AT DISTRICT OFFICE.

CURVE DATA

No. ⑪	R	Δ	T	L
1	9900′	7°28′53"	647.27′	1292.70′

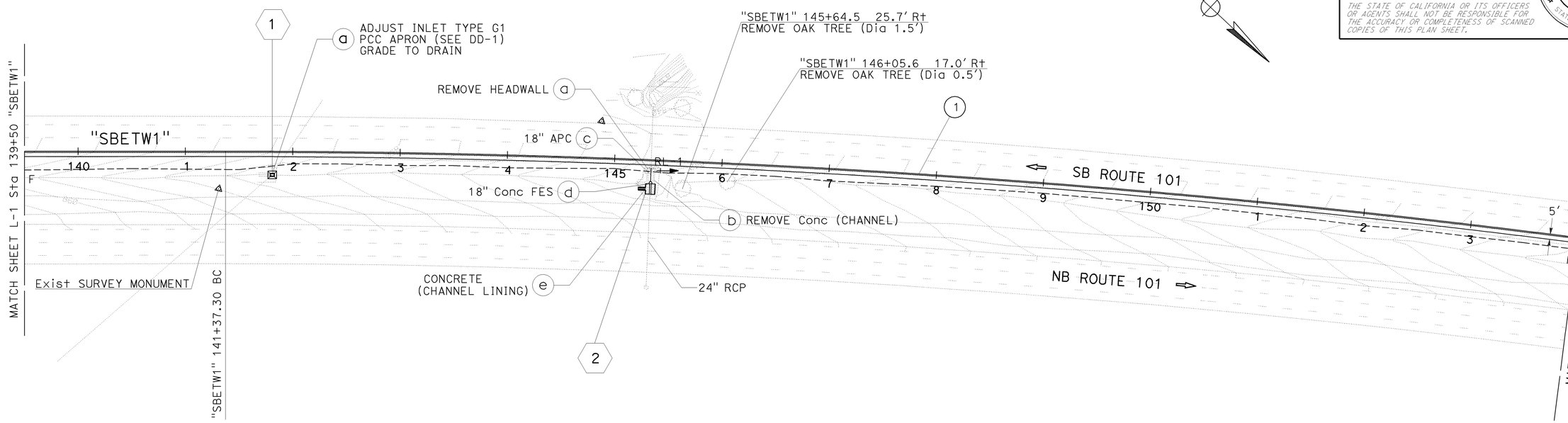

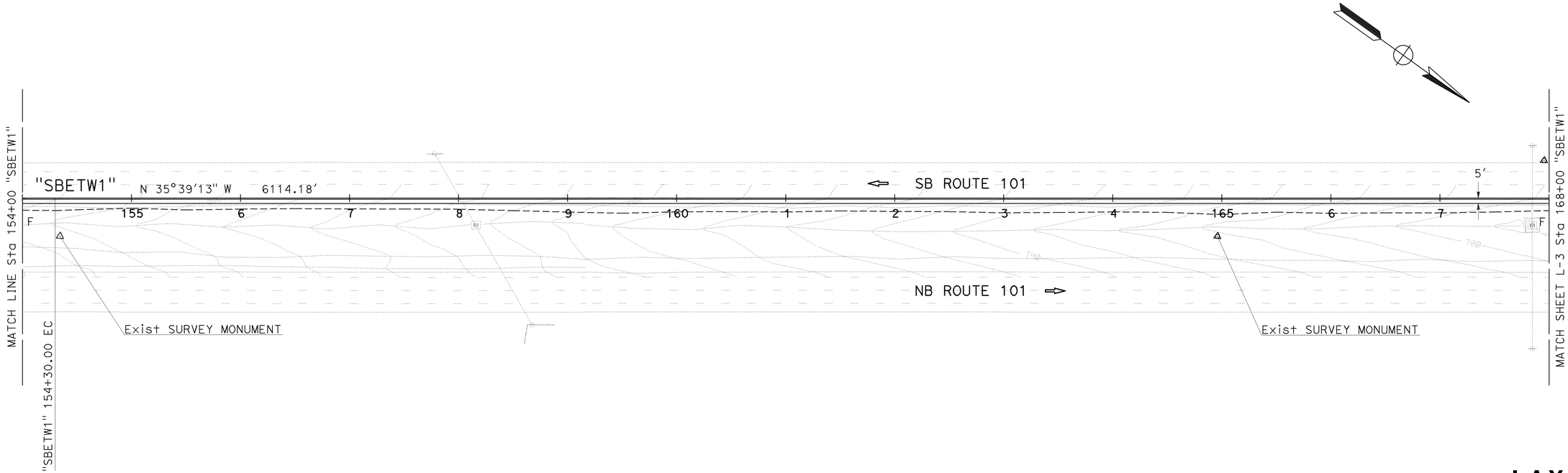

LAYOUT

SCALE : 1" = 50′ **L-2**

STATE OF CALIFORNIA - DEPARTMENT OF TRANSPORTATION — DESIGN

SCOTT KIRKISH — CALCULATED-DESIGNED BY

STEVE WYATT — FUNCTIONAL SUPERVISOR

CHECKED BY — DATE REVISED — REVISED BY

LAST REVISION 01-27-12 — DATE PLOTTED => 07-FEB-2012 — TIME PLOTTED => 13:47

BORDER LAST REVISED 7/2/2010 — USERNAME => s118989 — DGN FILE => 0500020303ea002.dgn — RELATIVE BORDER SCALE IS IN INCHES 0 1 2 3 — UNIT 1450 — PROJECT NUMBER & PHASE 05000203031

Dist	COUNTY	ROUTE	POST MILES TOTAL PROJECT	SHEET No.	TOTAL SHEETS
05	SB	101	78.4/82.2	5	45

REGISTERED CIVIL ENGINEER — DATE 1-27-12

PLANS APPROVAL DATE 1-30-12

REGISTERED PROFESSIONAL ENGINEER — SCOTT D. KIRKISH — No. 76829 — Exp. 12/31/12 — CIVIL — STATE OF CALIFORNIA

THE STATE OF CALIFORNIA OR ITS OFFICERS OR AGENTS SHALL NOT BE RESPONSIBLE FOR THE ACCURACY OR COMPLETENESS OF SCANNED COPIES OF THIS PLAN SHEET.

NOTE:

FOR ACCURATE RIGHT OF WAY DATA, CONTACT RIGHT OF WAY ENGINEERING AT DISTRICT OFFICE.

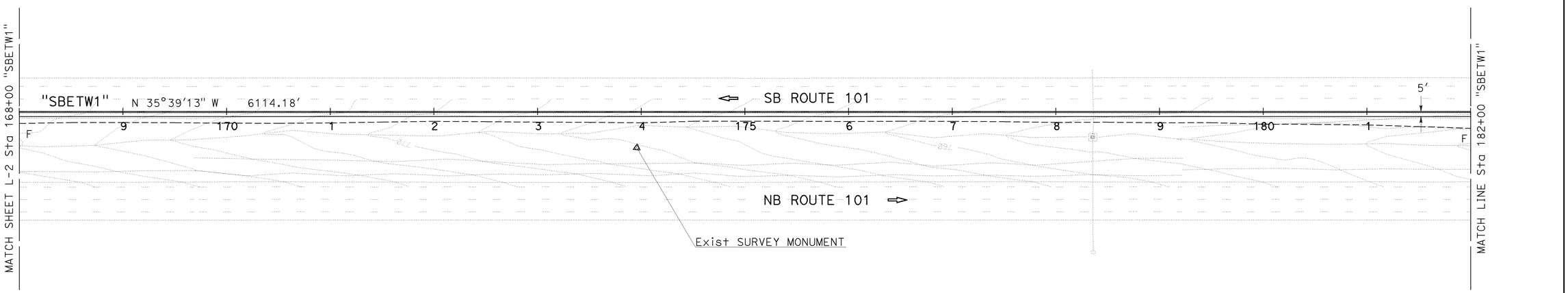

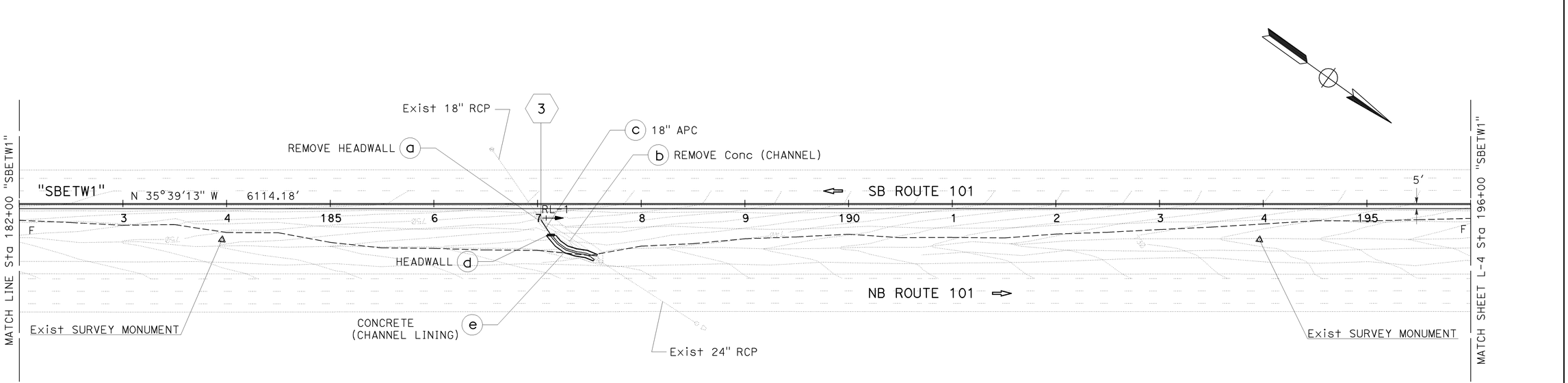

LAYOUT

SCALE : 1" = 50' **L-3**

STATE OF CALIFORNIA - DEPARTMENT OF TRANSPORTATION — DESIGN

FUNCTIONAL SUPERVISOR: STEVE WYATT

CALCULATED-DESIGNED BY: SCOTT KIRKISH

CHECKED BY: STEVE WYATT

REVISED BY | DATE REVISED

LAST REVISION | DATE PLOTTED => 07-FEB-2012 | TIME PLOTTED => 13:47 | 01-27-12

BORDER LAST REVISED 7/2/2010

USERNAME => s118989
DGN FILE => 0500020303ea003.dgn

RELATIVE BORDER SCALE IS IN INCHES 0 1 2 3

UNIT 1450

PROJECT NUMBER & PHASE 05000203031

Dist	COUNTY	ROUTE	POST MILES TOTAL PROJECT	SHEET No.	TOTAL SHEETS
05	SB	101	78.4/82.2	6	45

REGISTERED CIVIL ENGINEER — DATE: 1-27-12

PLANS APPROVAL DATE: 1-30-12

THE STATE OF CALIFORNIA OR ITS OFFICERS OR AGENTS SHALL NOT BE RESPONSIBLE FOR THE ACCURACY OR COMPLETENESS OF SCANNED COPIES OF THIS PLAN SHEET.

REGISTERED PROFESSIONAL ENGINEER — SCOTT D. KIRKISH — No. 76829 — Exp. 12/31/12 — CIVIL — STATE OF CALIFORNIA

NOTE:

FOR ACCURATE RIGHT OF WAY DATA, CONTACT RIGHT OF WAY ENGINEERING AT DISTRICT OFFICE.

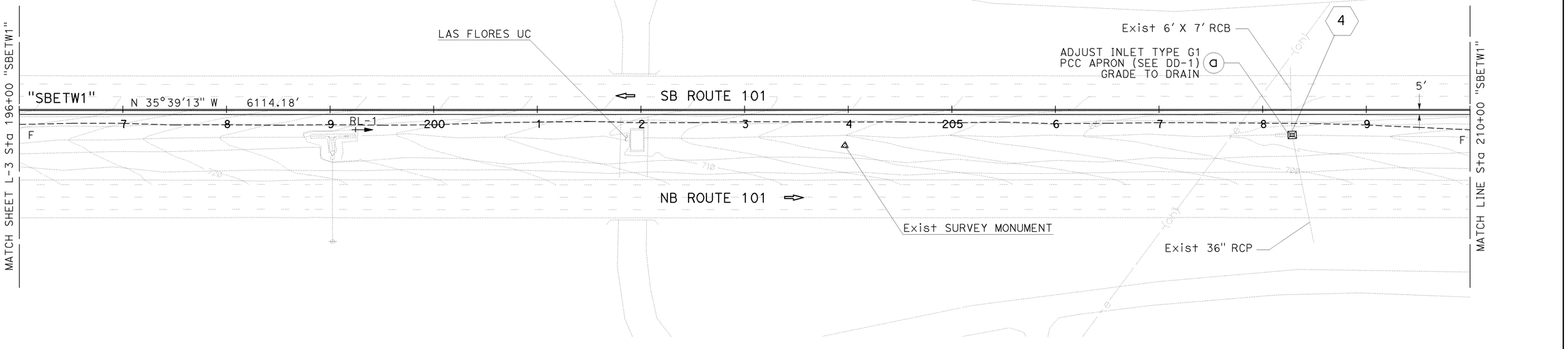

CURVE DATA

No. ⑪	R	Δ	T	L
2	19900′	1°29′51"	260.06′	520.09′

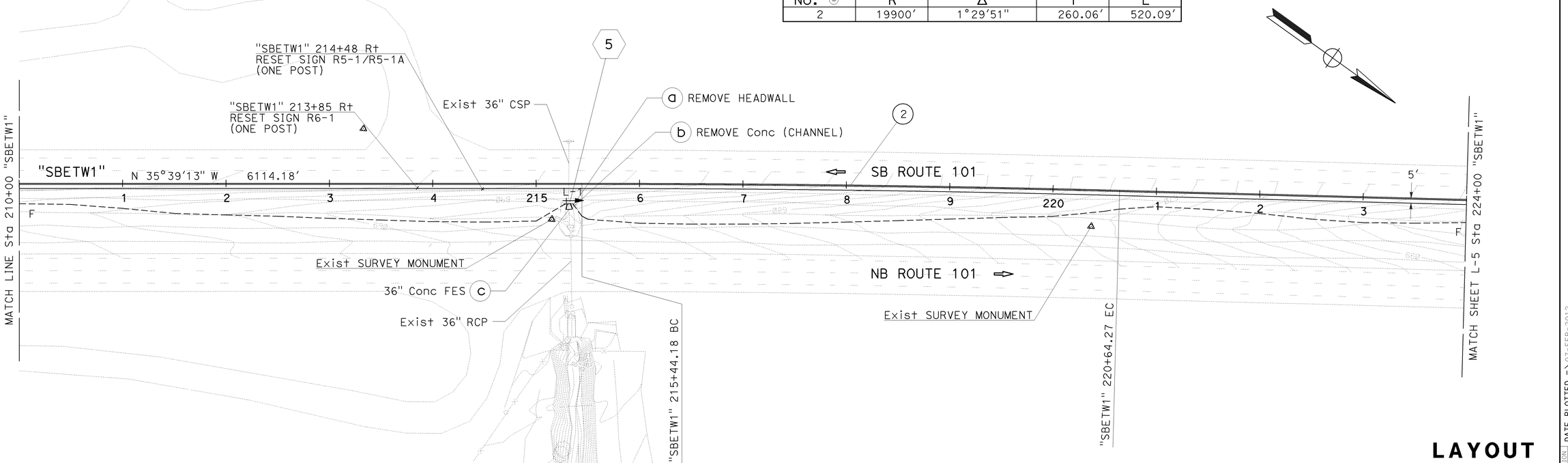

LAYOUT

SCALE : 1" = 50′ **L-4**

STATE OF CALIFORNIA - DEPARTMENT OF TRANSPORTATION — DESIGN

FUNCTIONAL SUPERVISOR: STEVE WYATT

CALCULATED-DESIGNED BY: SCOTT KIRKISH

CHECKED BY: STEVE WYATT

REVISED BY | DATE REVISED

LAST REVISION | DATE PLOTTED => 07-FEB-2012 | TIME PLOTTED => 13:47 | 01-27-12

BORDER LAST REVISED 7/2/2010 | USERNAME => s118989 | DGN FILE => 0500020303ea004.dgn | RELATIVE BORDER SCALE IS IN INCHES 0 1 2 3 | UNIT 1450 | PROJECT NUMBER & PHASE 05000203031

Dist	COUNTY	ROUTE	POST MILES TOTAL PROJECT	SHEET No.	TOTAL SHEETS
05	SB	101	78.4/82.2	7	45

REGISTERED CIVIL ENGINEER — DATE: 1-27-12

PLANS APPROVAL DATE: 1-30-12

REGISTERED PROFESSIONAL ENGINEER — SCOTT D. KIRKISH — No. 76829 — Exp. 12/31/12 — CIVIL — STATE OF CALIFORNIA

THE STATE OF CALIFORNIA OR ITS OFFICERS OR AGENTS SHALL NOT BE RESPONSIBLE FOR THE ACCURACY OR COMPLETENESS OF SCANNED COPIES OF THIS PLAN SHEET.

NOTE:

FOR ACCURATE RIGHT OF WAY DATA, CONTACT RIGHT OF WAY ENGINEERING AT DISTRICT OFFICE.

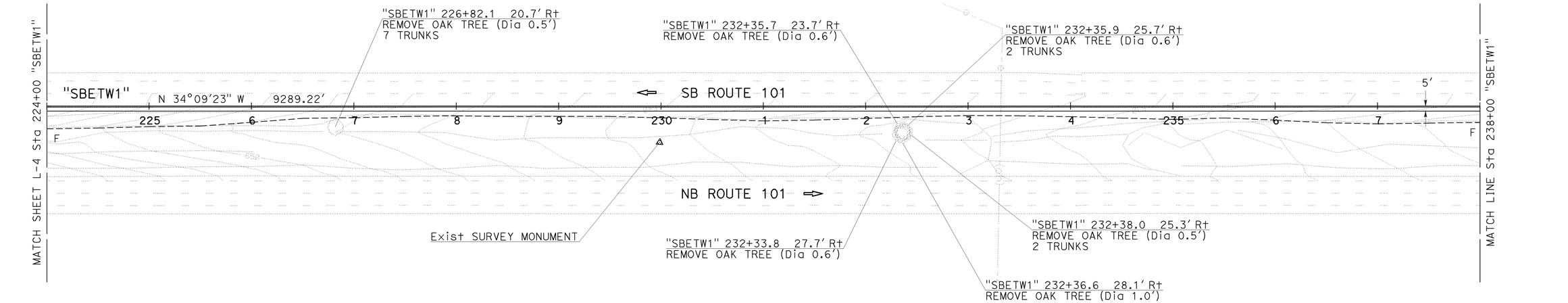

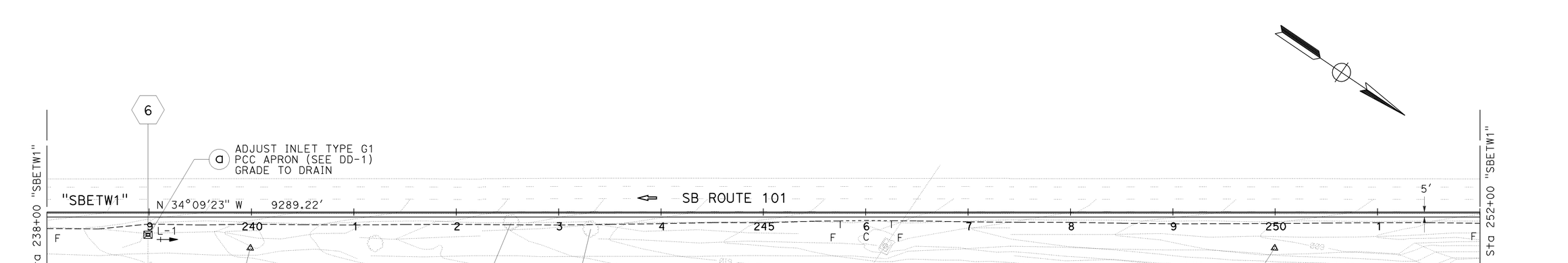

LAYOUT

SCALE : 1" = 50'

L-5

STATE OF CALIFORNIA - DEPARTMENT OF TRANSPORTATION — DESIGN

FUNCTIONAL SUPERVISOR: STEVE WYATT

CALCULATED-DESIGNED BY: SCOTT KIRKISH

CHECKED BY: STEVE WYATT

REVISED BY | DATE REVISED

LAST REVISION: 01-27-12

DATE PLOTTED => 07-FEB-2012

TIME PLOTTED => 13:47

BORDER LAST REVISED 7/2/2010

USERNAME => s118989

DGN FILE => 0500020303ea005.dgn

RELATIVE BORDER SCALE IS IN INCHES 0 1 2 3

UNIT 1450

PROJECT NUMBER & PHASE 05000203031

Dist	COUNTY	ROUTE	POST MILES TOTAL PROJECT	SHEET No.	TOTAL SHEETS
05	SB	101	78.4/82.2	8	45

REGISTERED CIVIL ENGINEER — DATE: 1-27-12

PLANS APPROVAL DATE: 1-30-12

SCOTT D. KIRKISH No. 76829 Exp. 12/31/12 CIVIL — REGISTERED PROFESSIONAL ENGINEER — STATE OF CALIFORNIA

THE STATE OF CALIFORNIA OR ITS OFFICERS OR AGENTS SHALL NOT BE RESPONSIBLE FOR THE ACCURACY OR COMPLETENESS OF SCANNED COPIES OF THIS PLAN SHEET.

NOTE:

FOR ACCURATE RIGHT OF WAY DATA, CONTACT RIGHT OF WAY ENGINEERING AT DISTRICT OFFICE.

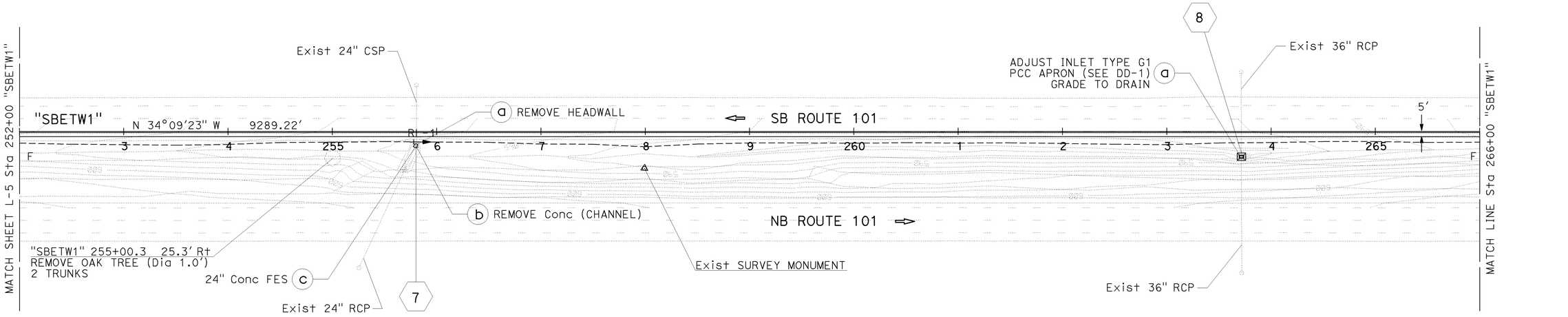

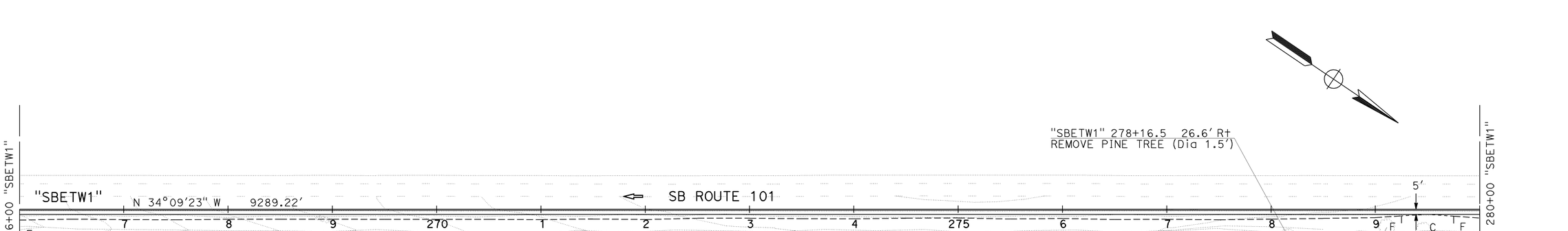

LAYOUT

SCALE : 1" = 50' **L-6**

REVISED BY | DATE REVISED

SCOTT KIRKISH | STEVE WYATT

CALCULATED-DESIGNED BY | CHECKED BY

FUNCTIONAL SUPERVISOR: STEVE WYATT

STATE OF CALIFORNIA - DEPARTMENT OF TRANSPORTATION

DESIGN

Caltrans

LAST REVISION 01-27-12 | DATE PLOTTED => 07-FEB-2012 | TIME PLOTTED => 13:47

BORDER LAST REVISED 7/2/2010 | USERNAME => s118989 | DGN FILE => 0500020303ea006.dgn | RELATIVE BORDER SCALE IS IN INCHES 0 1 2 3 | UNIT 1450 | PROJECT NUMBER & PHASE 05000203031

Dist	COUNTY	ROUTE	POST MILES TOTAL PROJECT	SHEET No.	TOTAL SHEETS
05	SB	101	78.4/82.2	9	45

REGISTERED CIVIL ENGINEER — DATE: 1-27-12

PLANS APPROVAL DATE: 1-30-12

SCOTT D. KIRKISH No. 76829 Exp. 12/31/12 CIVIL — REGISTERED PROFESSIONAL ENGINEER — STATE OF CALIFORNIA

THE STATE OF CALIFORNIA OR ITS OFFICERS OR AGENTS SHALL NOT BE RESPONSIBLE FOR THE ACCURACY OR COMPLETENESS OF SCANNED COPIES OF THIS PLAN SHEET.

NOTE:

FOR ACCURATE RIGHT OF WAY DATA, CONTACT RIGHT OF WAY ENGINEERING AT DISTRICT OFFICE.

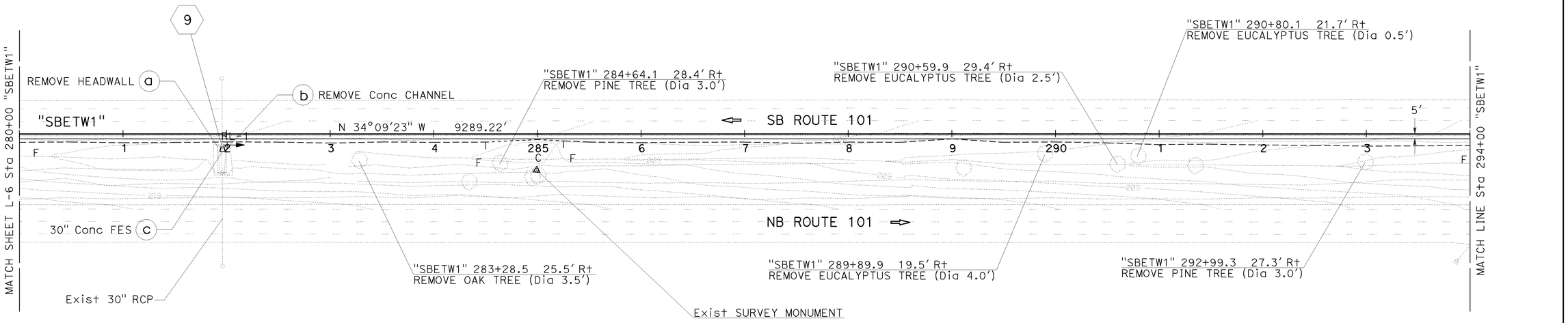

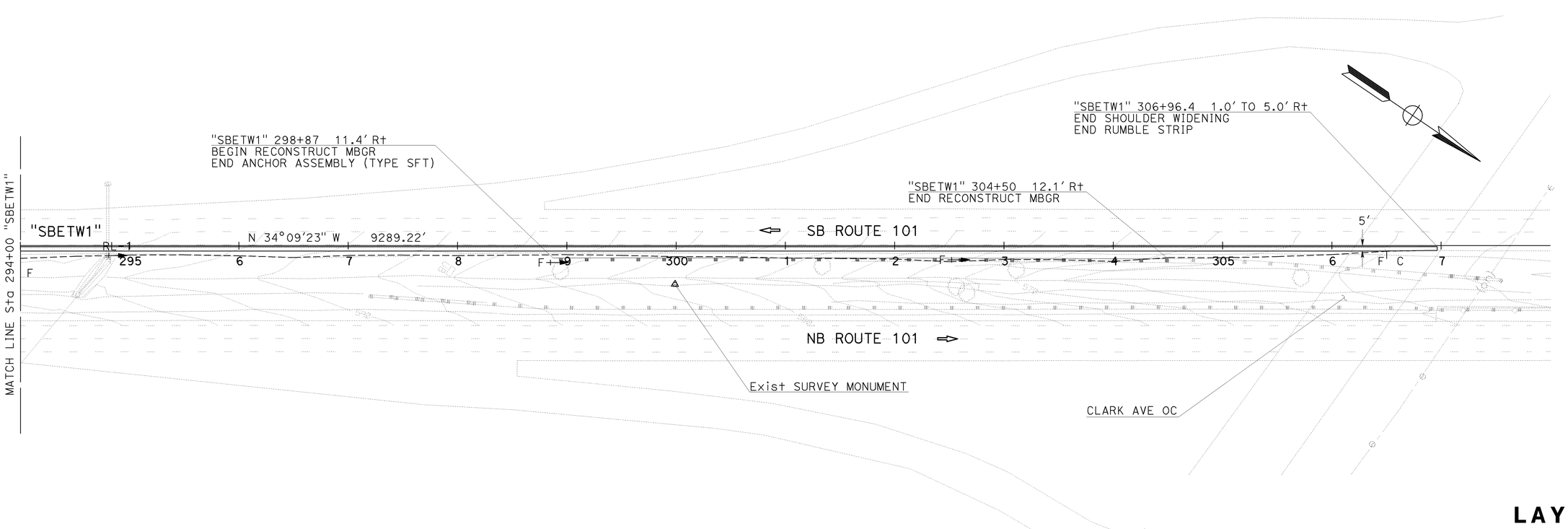

LAYOUT

SCALE : 1" = 50'

L-7

STATE OF CALIFORNIA - DEPARTMENT OF TRANSPORTATION — DESIGN

FUNCTIONAL SUPERVISOR: STEVE WYATT

CALCULATED-DESIGNED BY: SCOTT KIRKISH

CHECKED BY:

REVISED BY / DATE REVISED:

LAST REVISION: DATE PLOTTED => 07-FEB-2012 TIME PLOTTED => 13:47

01-27-12

BORDER LAST REVISED 7/2/2010

USERNAME => s118989
DGN FILE => 0500020303ea007.dgn

RELATIVE BORDER SCALE IS IN INCHES 0 1 2 3

UNIT 1450

PROJECT NUMBER & PHASE 05000203031

Dist	COUNTY	ROUTE	POST MILES TOTAL PROJECT	SHEET No.	TOTAL SHEETS
05	SB	101	78.4/82.2	10	45

REGISTERED CIVIL ENGINEER — DATE: 1-27-12

PLANS APPROVAL DATE: 1-30-12

REGISTERED PROFESSIONAL ENGINEER — SCOTT D. KIRKISH — No. 76829 — Exp. 12/31/12 — CIVIL — STATE OF CALIFORNIA

THE STATE OF CALIFORNIA OR ITS OFFICERS OR AGENTS SHALL NOT BE RESPONSIBLE FOR THE ACCURACY OR COMPLETENESS OF SCANNED COPIES OF THIS PLAN SHEET.

NOTES:

1. GRADE EXISTING GROUND FLUSH WITH HMA (TYPE A) SURFACE. 1' MINIMUM WIDTH.
2. FOR LOCATION AND LIMITS OF EMBANKMENT SEE LAYOUT SHEETS.

ADDITIONAL HMA QUANTITIES FOR SAFETY EDGE TREATMENT/MILE

PAVEMENT THICKNESS (FT)	HMA (TYPE A) (TON)
0.20	13.7

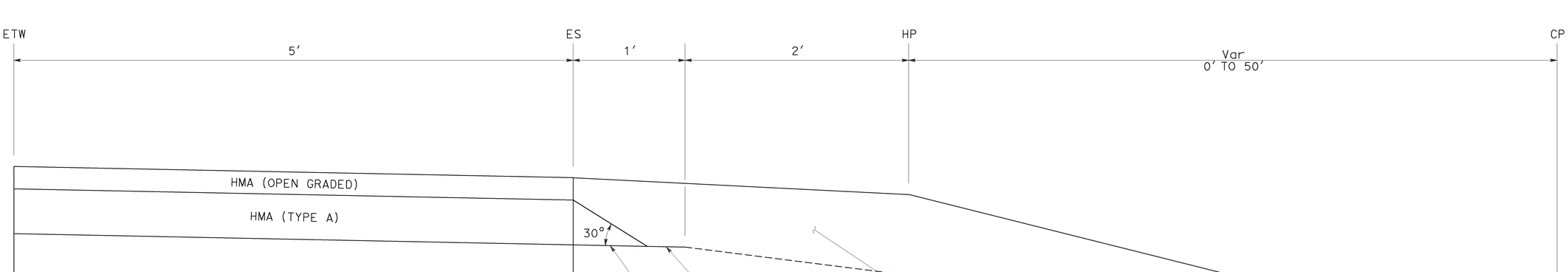

SAFETY EDGE TREATMENT DETAILS

CONSTRUCTION DETAILS

NO SCALE

C-1

STATE OF CALIFORNIA - DEPARTMENT OF TRANSPORTATION
DESIGN
FUNCTIONAL SUPERVISOR: STEVE WYATT
CALCULATED-DESIGNED BY: SCOTT KIRKISH
CHECKED BY: STEVE WYATT
REVISED BY
DATE REVISED

LAST REVISION: 01-27-12
DATE PLOTTED => 07-FEB-2012
TIME PLOTTED => 13:47

Dist	COUNTY	ROUTE	POST MILES TOTAL PROJECT	SHEET No.	TOTAL SHEETS
05	SB	101	78.4/82.2	11	45

LICENSED LANDSCAPE ARCHITECT

1-30-12

PLANS APPROVAL DATE

THE STATE OF CALIFORNIA OR ITS OFFICERS OR AGENTS SHALL NOT BE RESPONSIBLE FOR THE ACCURACY OR COMPLETENESS OF SCANNED COPIES OF THIS PLAN SHEET.

LICENSED LANDSCAPE ARCHITECT Patrick K Bolger 3622 Signature 11-30-2012 Renewal date 1-27-2012 Date STATE OF CALIFORNIA

NOTE:

FOR ACCURATE RIGHT OF WAY DATA, CONTACT RIGHT OF WAY ENGINEERING AT THE DISTRICT OFFICE.

LEGEND:

EROSION CONTROL (COMPOST BLANKET) 33.6 CY/ACRE
EROSION CONTROL (HYDROSEED)

EXISTING VEGETATION

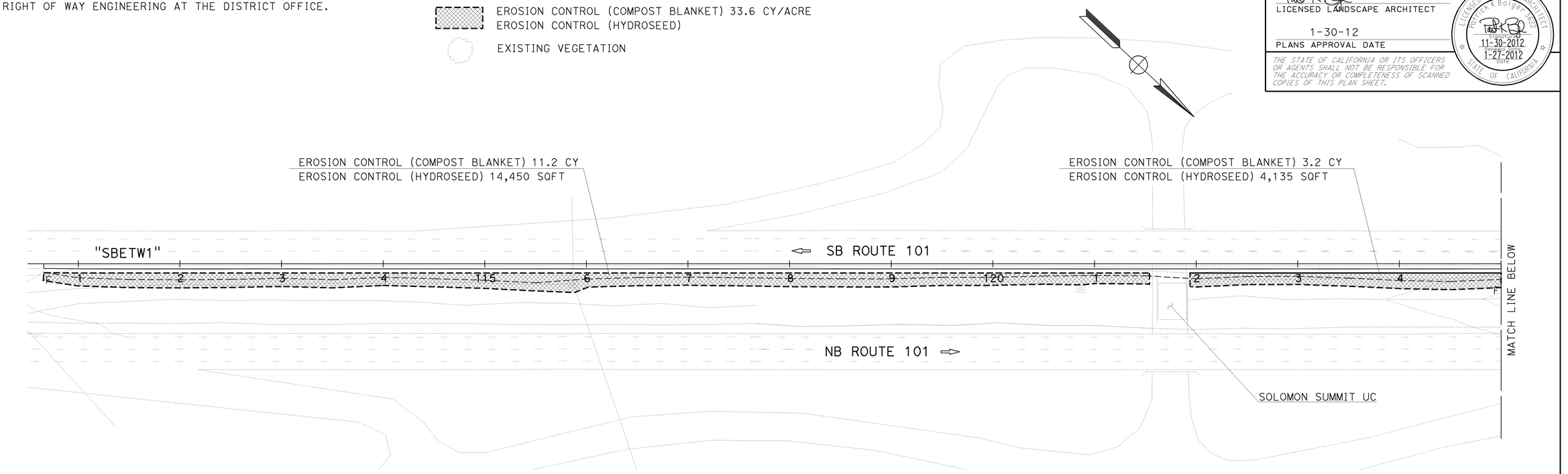

EROSION CONTROL PLAN

SCALE : 1" = 50'

EC-1

APPROVED FOR EROSION CONTROL WORK ONLY

STATE OF CALIFORNIA - DEPARTMENT OF TRANSPORTATION
Caltrans LANDSCAPE ARCHITECTURE

FUNCTIONAL SUPERVISOR: DENNIS REEVES
CALCULATED-DESIGNED BY: PATRICK BOLGER
CHECKED BY: KRISTEN LANGAGER
REVISED BY
DATE REVISED

LAST REVISION 01-27-12
DATE PLOTTED => 07-FEB-2012
TIME PLOTTED => 13:47

Dist	COUNTY	ROUTE	POST MILES TOTAL PROJECT	SHEET No.	TOTAL SHEETS
05	SB	101	78.4/82.2	12	45

LICENSED LANDSCAPE ARCHITECT

1-30-12
PLANS APPROVAL DATE

THE STATE OF CALIFORNIA OR ITS OFFICERS OR AGENTS SHALL NOT BE RESPONSIBLE FOR THE ACCURACY OR COMPLETENESS OF SCANNED COPIES OF THIS PLAN SHEET.

LICENSED LANDSCAPE ARCHITECT
Patrick K Bolger 3622
Signature
11-30-2012
Renewal Date
1-27-2012
Date
STATE OF CALIFORNIA

NOTE:

FOR ACCURATE RIGHT OF WAY DATA, CONTACT RIGHT OF WAY ENGINEERING AT THE DISTRICT OFFICE.

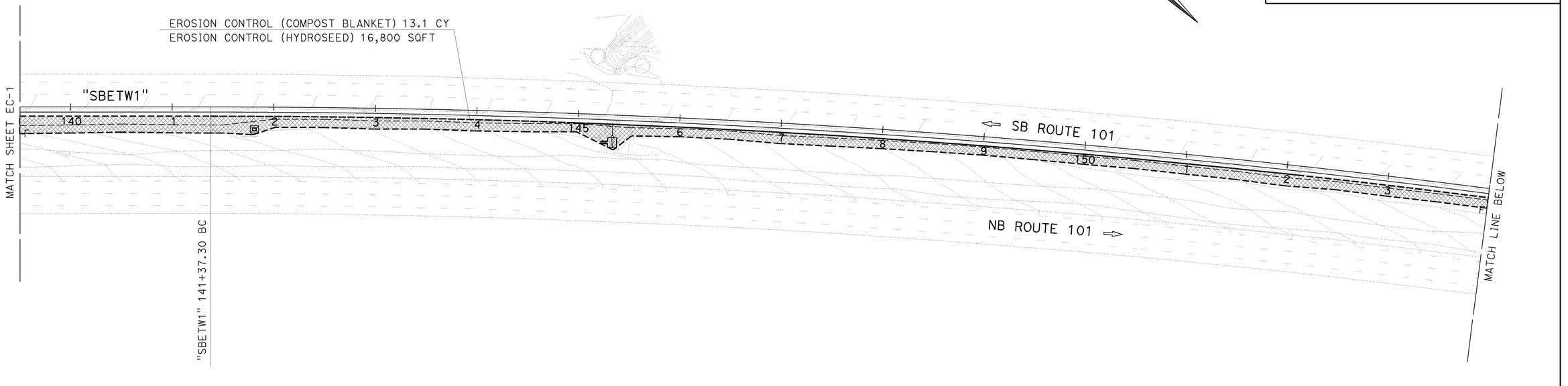

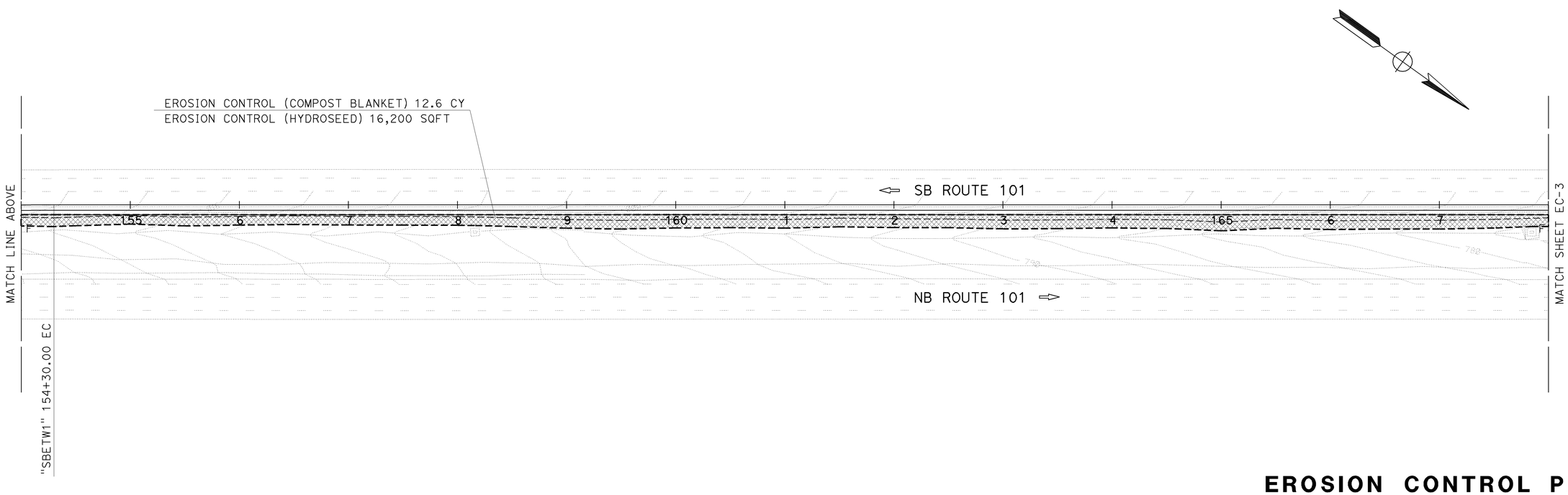

EROSION CONTROL PLAN

SCALE : 1" = 50'

EC-2

APPROVED FOR EROSION CONTROL WORK ONLY

STATE OF CALIFORNIA - DEPARTMENT OF TRANSPORTATION
Caltrans LANDSCAPE ARCHITECTURE

FUNCTIONAL SUPERVISOR: DENNIS REEVES
CALCULATED-DESIGNED BY: PATRICK BOLGER
CHECKED BY: KRISTEN LANGAGER
REVISED BY
DATE REVISED

LAST REVISION 01-27-12
DATE PLOTTED => 07-FEB-2012
TIME PLOTTED => 13:47

Dist	COUNTY	ROUTE	POST MILES TOTAL PROJECT	SHEET No.	TOTAL SHEETS
05	SB	101	78.4/82.2	13	45

LICENSED LANDSCAPE ARCHITECT

1-30-12

PLANS APPROVAL DATE

THE STATE OF CALIFORNIA OR ITS OFFICERS OR AGENTS SHALL NOT BE RESPONSIBLE FOR THE ACCURACY OR COMPLETENESS OF SCANNED COPIES OF THIS PLAN SHEET.

LICENSED LANDSCAPE ARCHITECT Patrick K Bolger 3622 Signature 11-30-2012 Renewal Date 1-27-2012 Date STATE OF CALIFORNIA

NOTE:

FOR ACCURATE RIGHT OF WAY DATA, CONTACT RIGHT OF WAY ENGINEERING AT THE DISTRICT OFFICE.

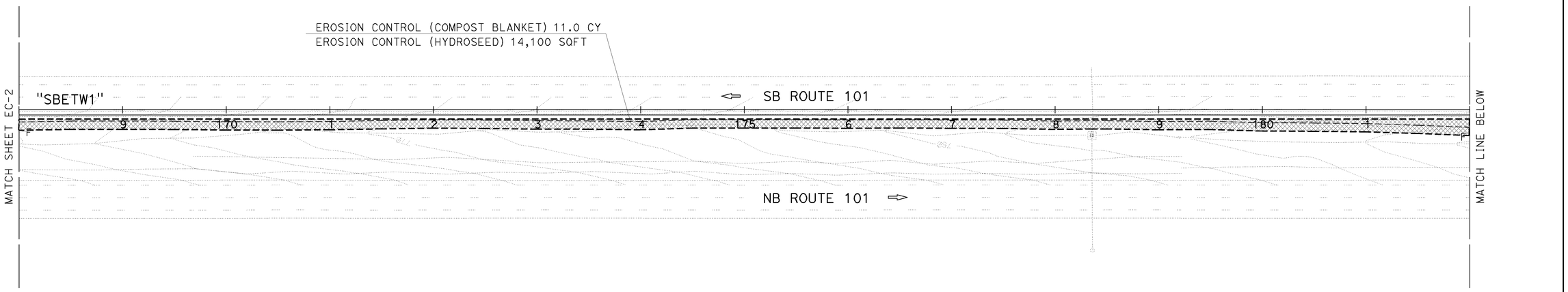

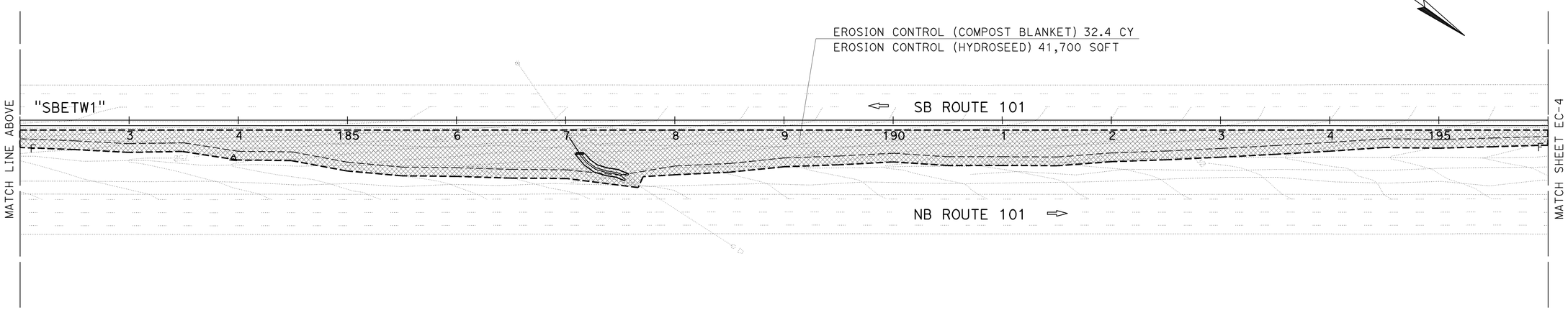

APPROVED FOR EROSION CONTROL WORK ONLY

EROSION CONTROL PLAN

SCALE : 1" = 50'

EC-3

STATE OF CALIFORNIA - DEPARTMENT OF TRANSPORTATION

Caltrans LANDSCAPE ARCHITECTURE

FUNCTIONAL SUPERVISOR: DENNIS REEVES

CALCULATED-DESIGNED BY: PATRICK BOLGER

CHECKED BY: KRISTEN LANGAGER

REVISED BY

DATE REVISED

LAST REVISION 01-27-12

DATE PLOTTED => 07-FEB-2012

TIME PLOTTED => 13:47

Dist	COUNTY	ROUTE	POST MILES TOTAL PROJECT	SHEET No.	TOTAL SHEETS
05	SB	101	78.4/82.2	14	45

LICENSED LANDSCAPE ARCHITECT

1-30-12
PLANS APPROVAL DATE

THE STATE OF CALIFORNIA OR ITS OFFICERS OR AGENTS SHALL NOT BE RESPONSIBLE FOR THE ACCURACY OR COMPLETENESS OF SCANNED COPIES OF THIS PLAN SHEET.

LICENSED LANDSCAPE ARCHITECT Patrick K Bolger 3622 Signature 11-30-2012 Renewal Date 1-27-2012 Date STATE OF CALIFORNIA

NOTE:

FOR ACCURATE RIGHT OF WAY DATA, CONTACT RIGHT OF WAY ENGINEERING AT THE DISTRICT OFFICE.

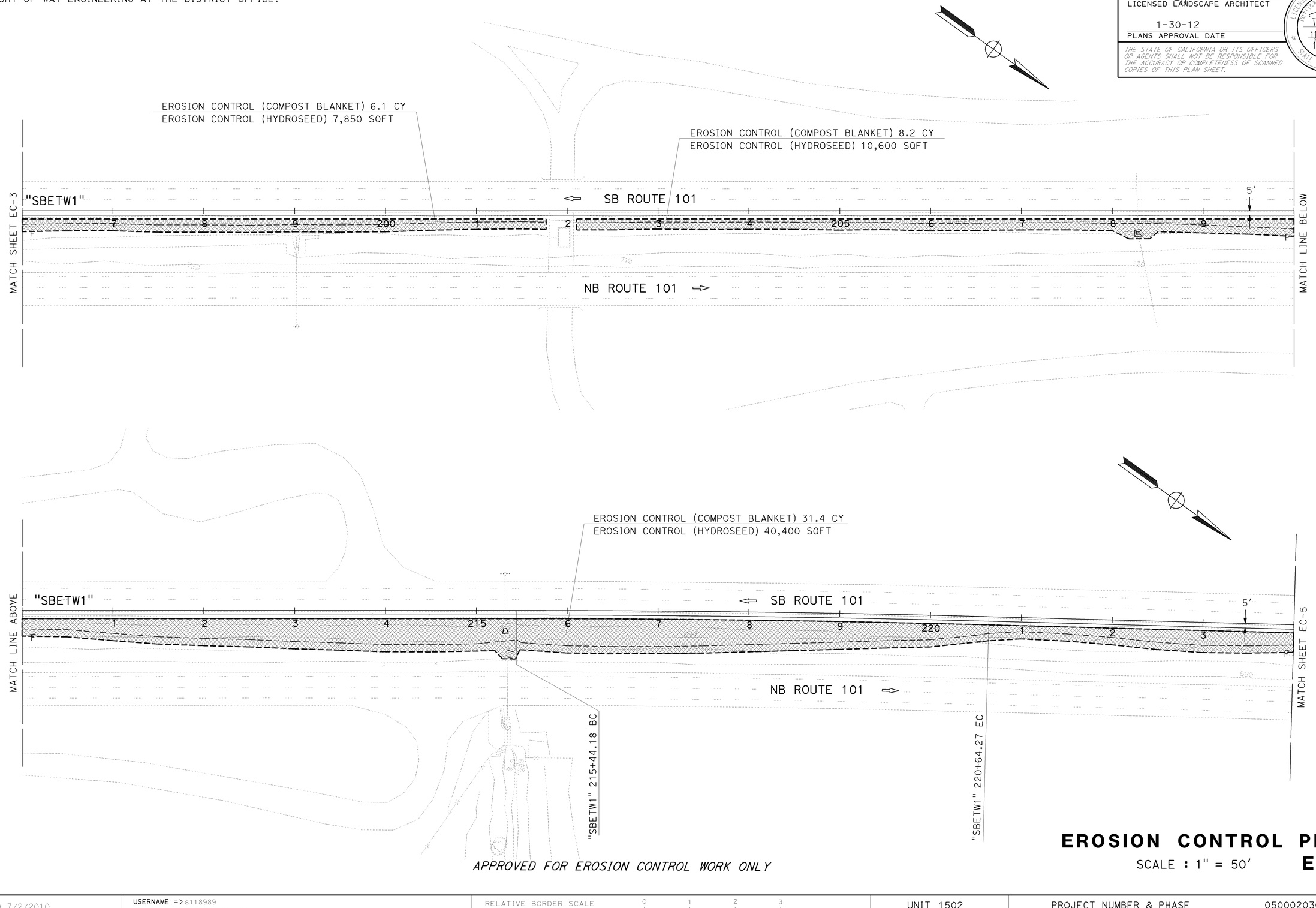

APPROVED FOR EROSION CONTROL WORK ONLY

EROSION CONTROL PLAN

SCALE : 1" = 50'

EC-4

STATE OF CALIFORNIA - DEPARTMENT OF TRANSPORTATION
Caltrans LANDSCAPE ARCHITECTURE

FUNCTIONAL SUPERVISOR: DENNIS REEVES
CALCULATED-DESIGNED BY: PATRICK BOLGER
CHECKED BY: KRISTEN LANGAGER
REVISED BY
DATE REVISED

LAST REVISION 01-27-12
DATE PLOTTED => 07-FEB-2012
TIME PLOTTED => 13:47

Dist	COUNTY	ROUTE	POST MILES TOTAL PROJECT	SHEET No.	TOTAL SHEETS
05	SB	101	78.4/82.2	15	45

LICENSED LANDSCAPE ARCHITECT

1-30-12

PLANS APPROVAL DATE

THE STATE OF CALIFORNIA OR ITS OFFICERS OR AGENTS SHALL NOT BE RESPONSIBLE FOR THE ACCURACY OR COMPLETENESS OF SCANNED COPIES OF THIS PLAN SHEET.

LICENSED LANDSCAPE ARCHITECT
Patrick K Bolger 3622
Signature
11-30-2012
Renewal Date
1-27-2012
Date
STATE OF CALIFORNIA

NOTE:

FOR ACCURATE RIGHT OF WAY DATA, CONTACT RIGHT OF WAY ENGINEERING AT THE DISTRICT OFFICE.

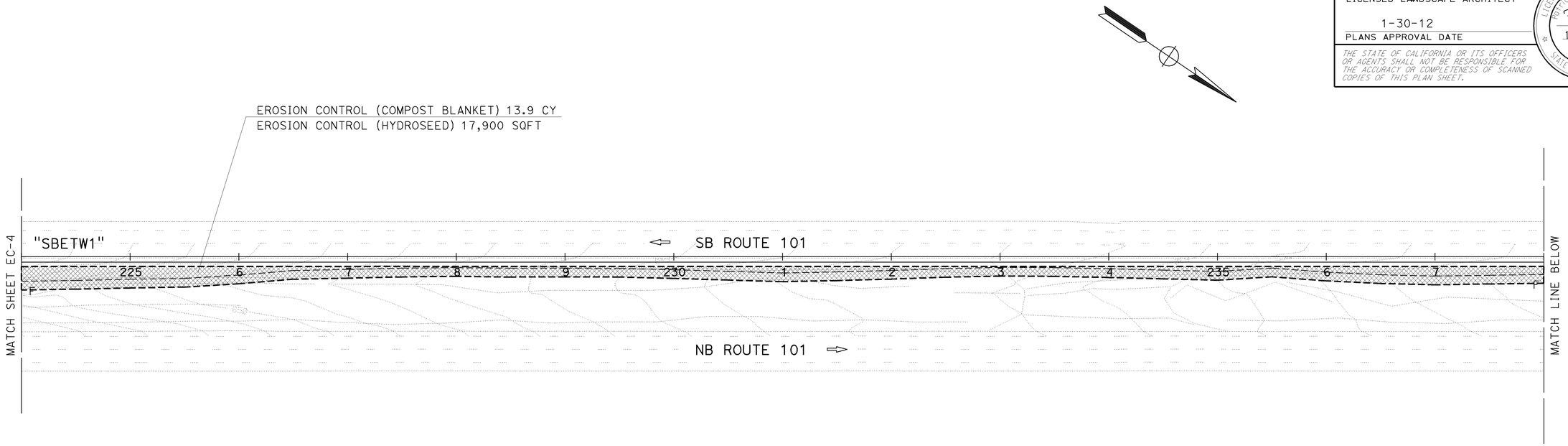

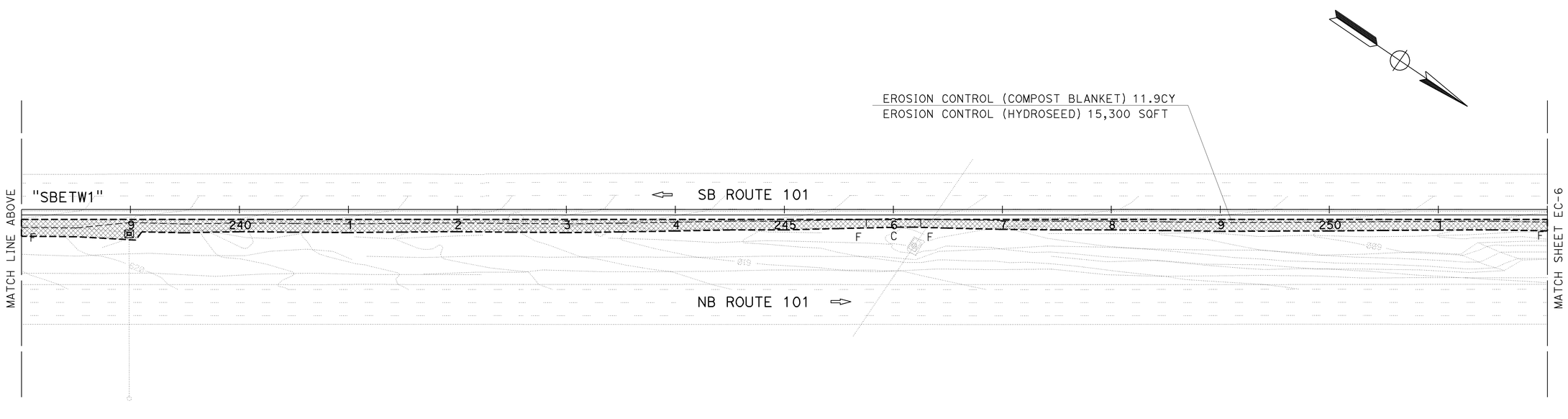

APPROVED FOR EROSION CONTROL WORK ONLY

EROSION CONTROL PLAN

SCALE : 1" = 50'

EC-5

STATE OF CALIFORNIA - DEPARTMENT OF TRANSPORTATION

Caltrans® LANDSCAPE ARCHITECTURE

FUNCTIONAL SUPERVISOR: DENNIS REEVES

CALCULATED-DESIGNED BY: PATRICK BOLGER

CHECKED BY: KRISTEN LANGAGER

REVISED BY

DATE REVISED

LAST REVISION 01-27-12

DATE PLOTTED => 07-FEB-2012

TIME PLOTTED => 13:47

Dist	COUNTY	ROUTE	POST MILES TOTAL PROJECT	SHEET No.	TOTAL SHEETS
05	SB	101	78.4/82.2	16	45

LICENSED LANDSCAPE ARCHITECT

1-30-12

PLANS APPROVAL DATE

THE STATE OF CALIFORNIA OR ITS OFFICERS OR AGENTS SHALL NOT BE RESPONSIBLE FOR THE ACCURACY OR COMPLETENESS OF SCANNED COPIES OF THIS PLAN SHEET.

LICENSED LANDSCAPE ARCHITECT Patrick K Bolger 3622 Signature 11-30-2012 Renewal Date 1-27-2012 Date STATE OF CALIFORNIA

NOTE:

FOR ACCURATE RIGHT OF WAY DATA, CONTACT RIGHT OF WAY ENGINEERING AT THE DISTRICT OFFICE.

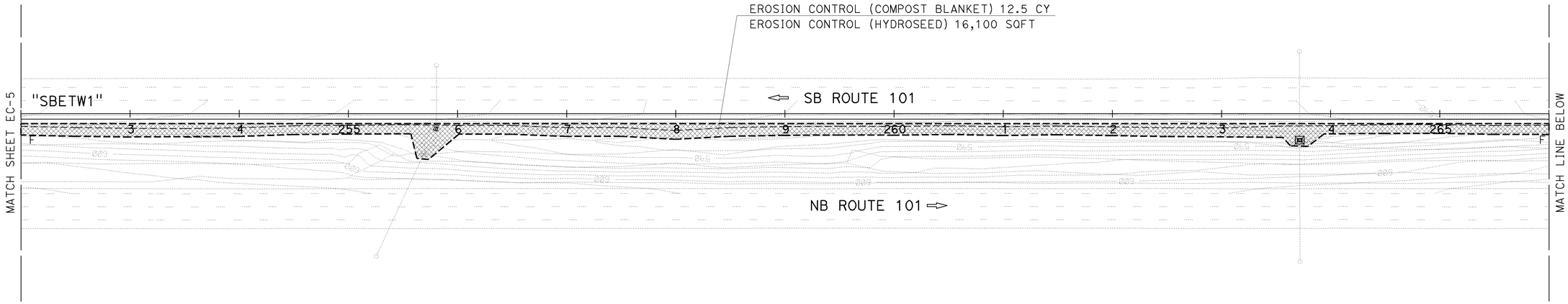

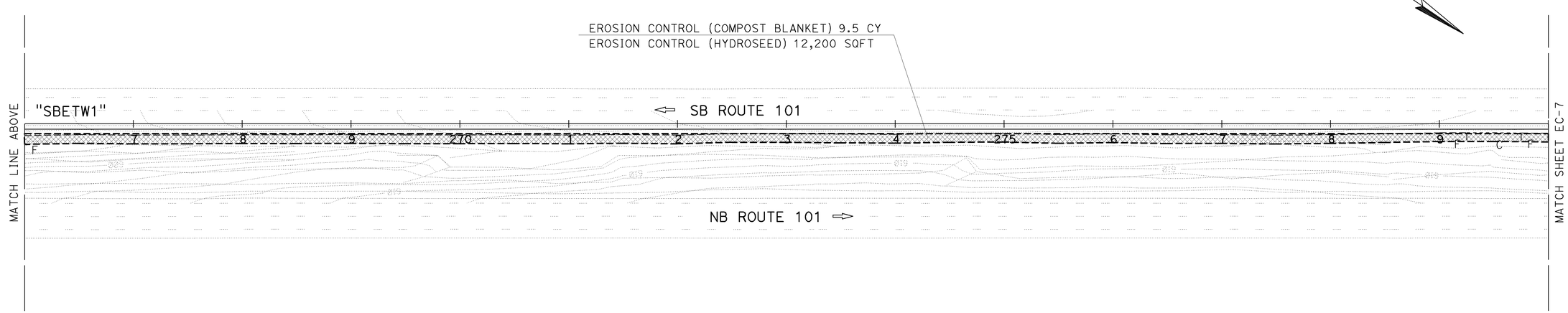

APPROVED FOR EROSION CONTROL WORK ONLY

EROSION CONTROL PLAN

SCALE : 1" = 50'

EC-6

STATE OF CALIFORNIA - DEPARTMENT OF TRANSPORTATION

Caltrans LANDSCAPE ARCHITECTURE

FUNCTIONAL SUPERVISOR: DENNIS REEVES

CALCULATED-DESIGNED BY: PATRICK BOLGER

CHECKED BY: KRISTEN LANGAGER

REVISED BY

DATE REVISED

LAST REVISION 01-27-12

DATE PLOTTED => 07-FEB-2012

TIME PLOTTED => 13:47

Dist	COUNTY	ROUTE	POST MILES TOTAL PROJECT	SHEET No.	TOTAL SHEETS
05	SB	101	78.4/82.2	17	45

LICENSED LANDSCAPE ARCHITECT

1-30-12

PLANS APPROVAL DATE

THE STATE OF CALIFORNIA OR ITS OFFICERS OR AGENTS SHALL NOT BE RESPONSIBLE FOR THE ACCURACY OR COMPLETENESS OF SCANNED COPIES OF THIS PLAN SHEET.

LICENSED LANDSCAPE ARCHITECT Patrick K Bolger 3622 Signature 11-30-2012 Renewal Date 1-27-2012 Date STATE OF CALIFORNIA

NOTE:

FOR ACCURATE RIGHT OF WAY DATA, CONTACT RIGHT OF WAY ENGINEERING AT THE DISTRICT OFFICE.

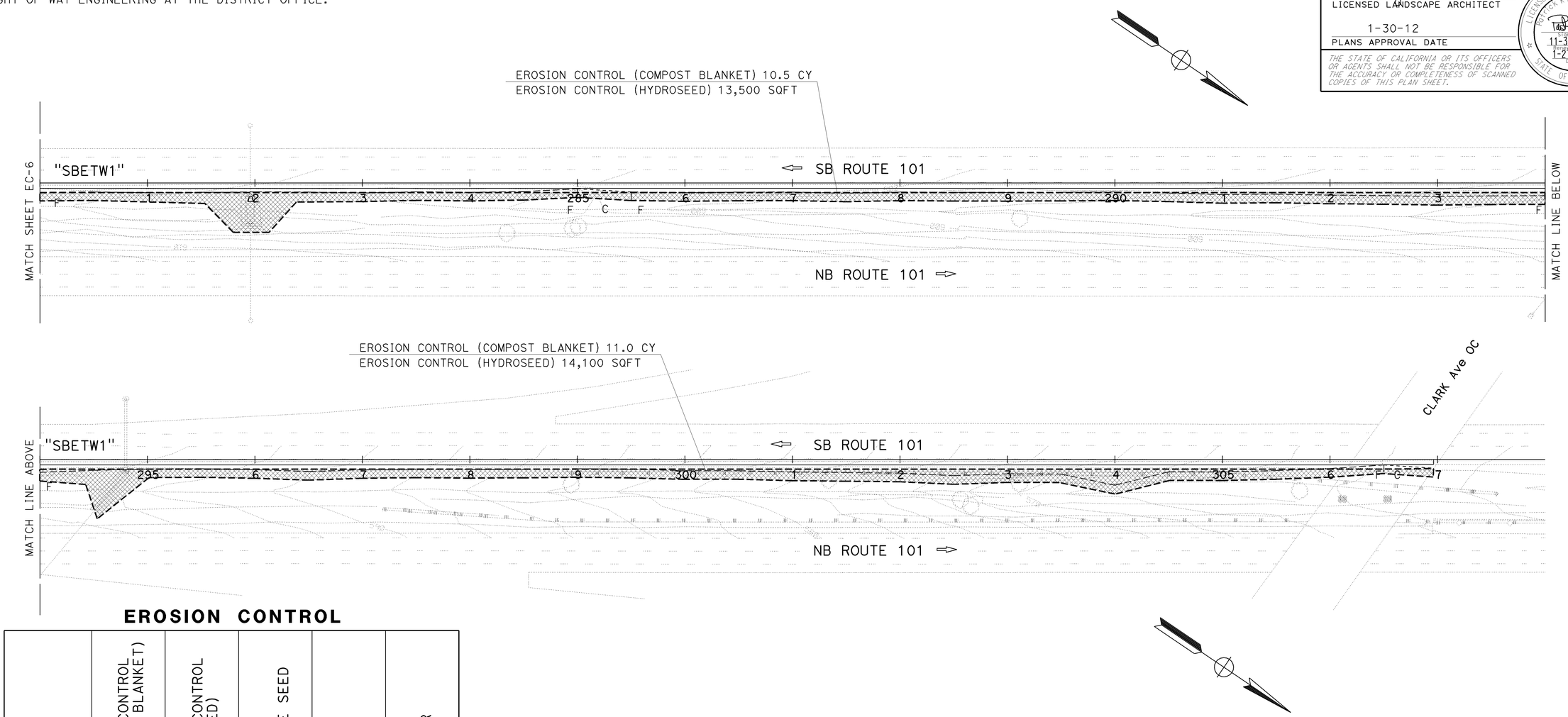

EROSION CONTROL

SHEET	EROSION CONTROL (COMPOST BLANKET)	EROSION CONTROL (HYDROSEED)	(N) PURE LIVE SEED	(N) FIBER	(N) TACKIFIER
	CY	SQFT	LB	LB	LB
EC-1	31.9	41,085	37.8	940.0	14.1
EC-2	25.7	33,000	30.3	757.6	113.6
EC-3	43.4	55,800	51.2	1,281.0	192.1
EC-4	45.7	58,850	54.0	1,351.0	202.7
EC-5	25.8	33,200	30.5	762.2	114.3
EC-6	22.0	28,300	26.0	650.0	97.5
EC-7	21.5	27,600	25.3	633.6	95.0
TOTAL	216	277,835	255.1	6,375.4	829.3

(N) NOT A SEPARATE PAY ITEM. FOR INFORMATION ONLY.

APPROVED FOR EROSION CONTROL WORK ONLY

EROSION CONTROL PLAN AND QUANTITIES

SCALE : 1" = 50'

EC-7

STATE OF CALIFORNIA - DEPARTMENT OF TRANSPORTATION

Caltrans® LANDSCAPE ARCHITECTURE

FUNCTIONAL SUPERVISOR: DENNIS REEVES

CALCULATED-DESIGNED BY: PATRICK BOLGER

CHECKED BY: KRISTEN LANGAGER

REVISED BY

DATE REVISED

LAST REVISION 01-27-12

DATE PLOTTED => 07-FEB-2012

TIME PLOTTED => 13:47

Dist	COUNTY	ROUTE	POST MILES TOTAL PROJECT	SHEET No.	TOTAL SHEETS
05	SB	101	78.4/82.2	18	45

REGISTERED CIVIL ENGINEER — DATE: 1-27-12

1-30-12
PLANS APPROVAL DATE

REGISTERED PROFESSIONAL ENGINEER
SCOTT D. KIRKISH
No. 76829
Exp. 12/31/12
CIVIL
STATE OF CALIFORNIA

THE STATE OF CALIFORNIA OR ITS OFFICERS OR AGENTS SHALL NOT BE RESPONSIBLE FOR THE ACCURACY OR COMPLETENESS OF SCANNED COPIES OF THIS PLAN SHEET.

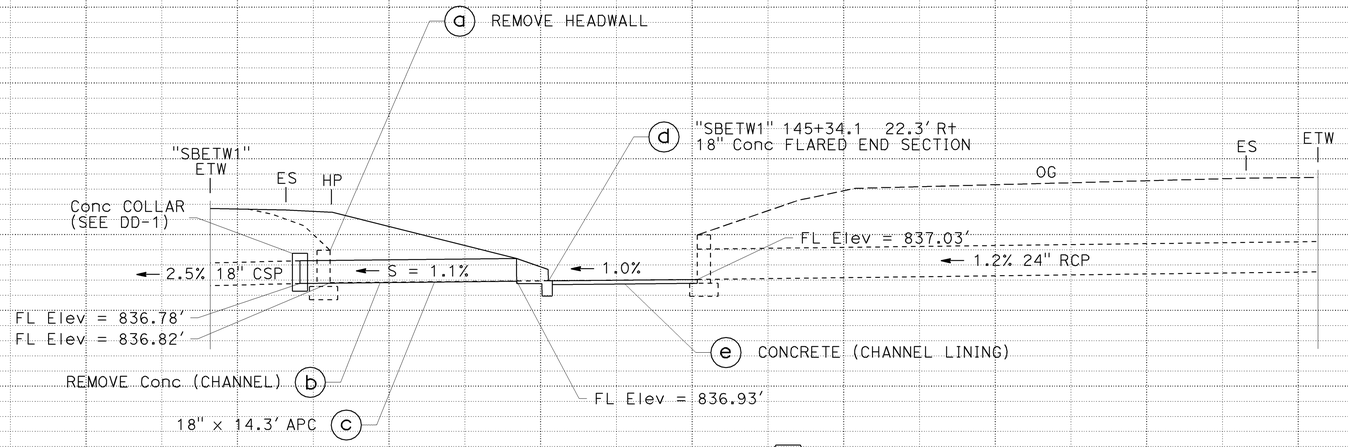

DRAINAGE SYSTEM No. 2
Sta "SBETW1" 145+34.1

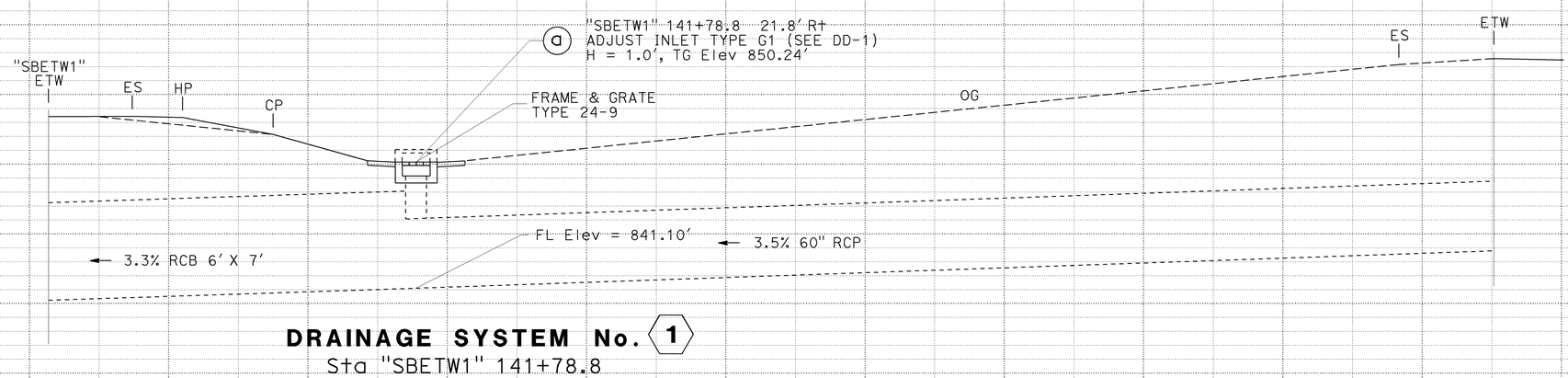

DRAINAGE SYSTEM No. 1
Sta "SBETW1" 141+78.8

DRAINAGE PROFILES
DP-1

SCALE : Horiz 1" = 5'
Vert 1" = 5'

STATE OF CALIFORNIA - DEPARTMENT OF TRANSPORTATION — DESIGN
FUNCTIONAL SUPERVISOR: STEVE WYATT
CALCULATED-DESIGNED BY
CHECKED BY: STEVE WYATT
REVISED BY | DATE REVISED

STATION | TOTAL
CY: Exc | Emb

LAST REVISION | DATE PLOTTED => 07-FEB-2012 | TIME PLOTTED => 13:47
01-27-12

BORDER LAST REVISED 7/2/2010
USERNAME => s118989
DGN FILE => 0500020303ib001.dgn
RELATIVE BORDER SCALE IS IN INCHES 0 1 2 3
UNIT 1450
PROJECT NUMBER & PHASE 05000203031

Dist	COUNTY	ROUTE	POST MILES TOTAL PROJECT	SHEET No.	TOTAL SHEETS
05	SB	101	78.4/82.2	19	45

REGISTERED CIVIL ENGINEER — DATE 1-27-12

PLANS APPROVAL DATE 1-30-12

REGISTERED PROFESSIONAL ENGINEER — SCOTT D. KIRKISH No. 76829 Exp. 12/31/12 CIVIL — STATE OF CALIFORNIA

THE STATE OF CALIFORNIA OR ITS OFFICERS OR AGENTS SHALL NOT BE RESPONSIBLE FOR THE ACCURACY OR COMPLETENESS OF SCANNED COPIES OF THIS PLAN SHEET.

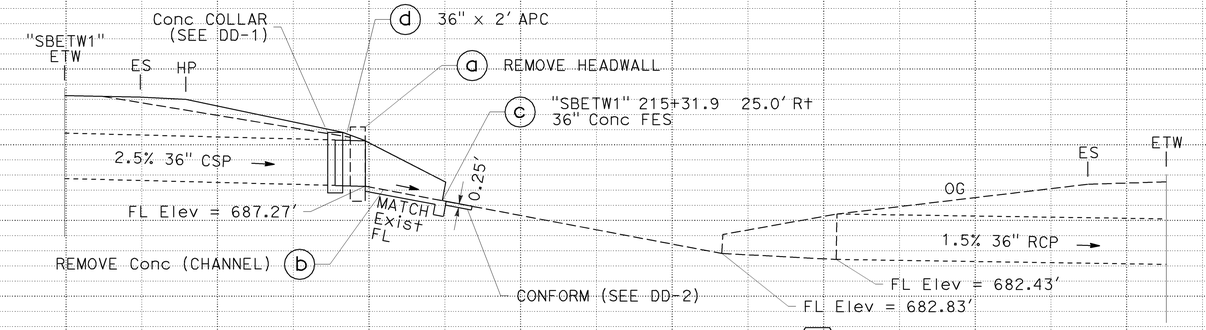

DRAINAGE SYSTEM No. 5

Sta "SBETW1" 215+31.9

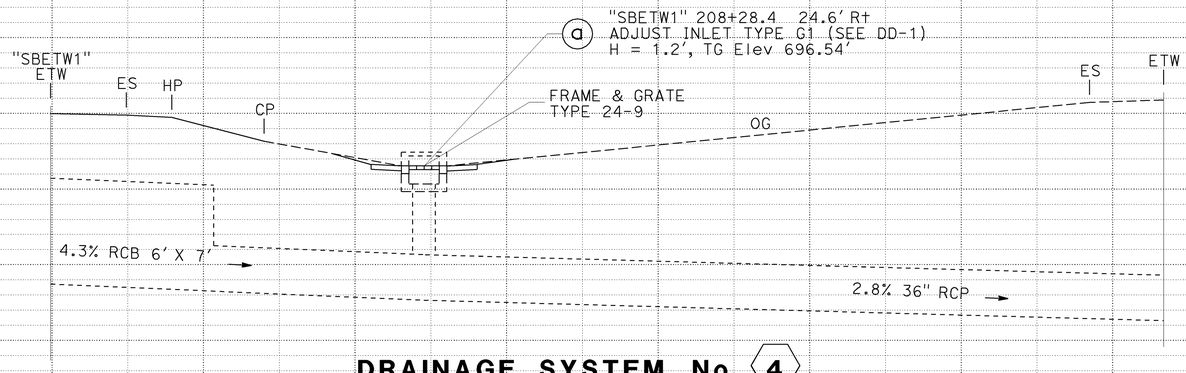

DRAINAGE SYSTEM No. 4

Sta "SBETW1" 208+28.4

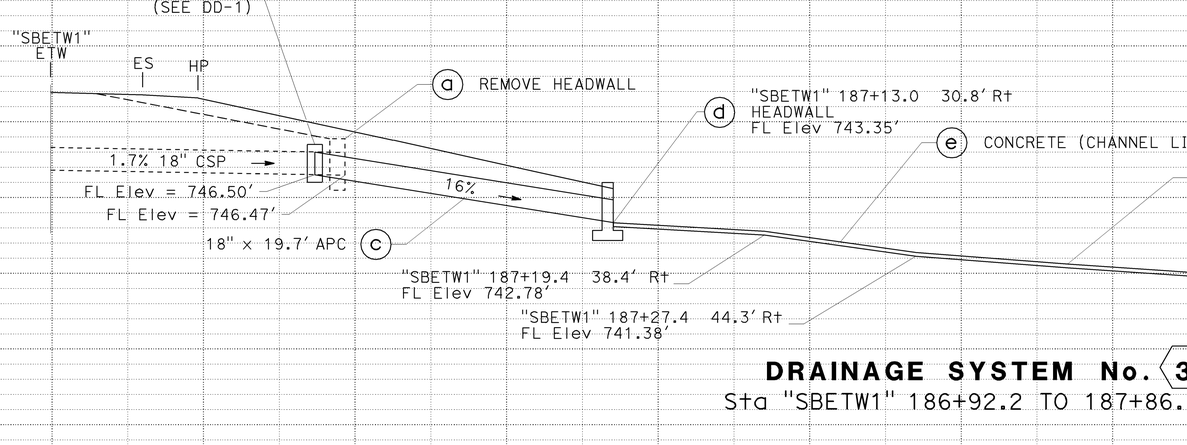

DRAINAGE SYSTEM No. 3

Sta "SBETW1" 186+92.2 TO 187+86.1

DRAINAGE PROFILES DP-2

SCALE : Horiz 1" = 5'
Vert 1" = 5'

STATION		TOTAL
CY	Exc	
	Emb	

REVISED BY | DATE REVISED
SCOTT KIRKISH | STEVE WYATT
CALCULATED-DESIGNED BY | CHECKED BY
FUNCTIONAL SUPERVISOR: STEVE WYATT
STATE OF CALIFORNIA - DEPARTMENT OF TRANSPORTATION — DESIGN — Caltrans

LAST REVISION DATE PLOTTED => 07-FEB-2012
01-27-12 TIME PLOTTED => 13:47

BORDER LAST REVISED 7/2/2010 | USERNAME => s118989 | DGN FILE => 0500020303ib002.dgn | RELATIVE BORDER SCALE IS IN INCHES 0 1 2 3 | UNIT 1450 | PROJECT NUMBER & PHASE 05000203031

Dist	COUNTY	ROUTE	POST MILES TOTAL PROJECT	SHEET No.	TOTAL SHEETS
05	SB	101	78.4/82.2	20	45

REGISTERED CIVIL ENGINEER — DATE: 1-27-12

1-30-12
PLANS APPROVAL DATE

THE STATE OF CALIFORNIA OR ITS OFFICERS OR AGENTS SHALL NOT BE RESPONSIBLE FOR THE ACCURACY OR COMPLETENESS OF SCANNED COPIES OF THIS PLAN SHEET.

REGISTERED PROFESSIONAL ENGINEER
SCOTT D. KIRKISH
No. 76829
Exp. 12/31/12
CIVIL
STATE OF CALIFORNIA

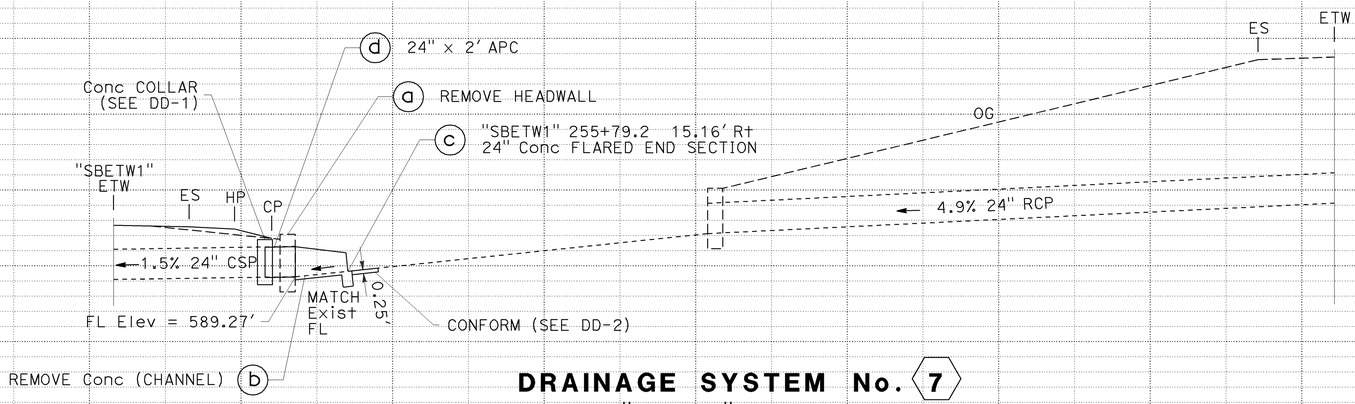

DRAINAGE SYSTEM No. 7
Sta "SBETW1" 255+79.2

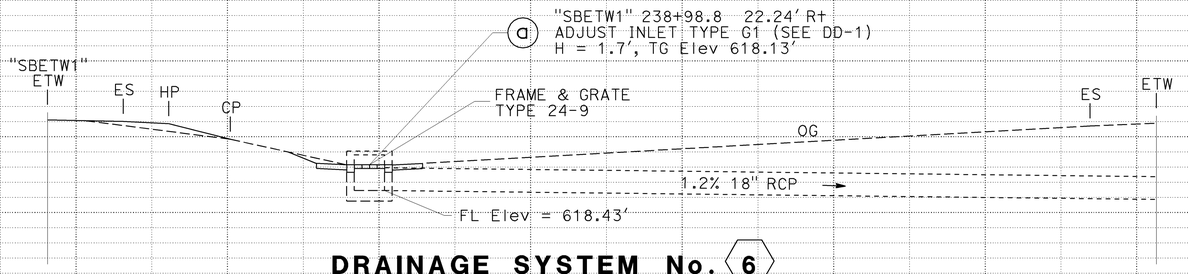

DRAINAGE SYSTEM No. 6
Sta "SBETW1" 238+98.8

DRAINAGE PROFILES
DP-3

SCALE : Horiz 1" = 5'
Vert 1" = 5'

STATION		TOTAL
CY	Exc	
	Emb	

STATE OF CALIFORNIA - DEPARTMENT OF TRANSPORTATION
DESIGN
FUNCTIONAL SUPERVISOR: STEVE WYATT
CALCULATED-DESIGNED BY: SCOTT KIRKISH
CHECKED BY: STEVE WYATT
REVISED BY
DATE REVISED

LAST REVISION DATE PLOTTED => 07-FEB-2012
TIME PLOTTED => 13:47
01-27-12

BORDER LAST REVISED 7/2/2010
USERNAME => s118989
DGN FILE => 05000203031ib003.dgn
RELATIVE BORDER SCALE IS IN INCHES 0 1 2 3
UNIT 1450
PROJECT NUMBER & PHASE 05000203031

Dist	COUNTY	ROUTE	POST MILES TOTAL PROJECT	SHEET No.	TOTAL SHEETS
05	SB	101	78.4/82.2	21	45

REGISTERED CIVIL ENGINEER — DATE: 1-27-12

1-30-12
PLANS APPROVAL DATE

REGISTERED PROFESSIONAL ENGINEER — SCOTT D. KIRKISH No. 76829 Exp. 12/31/12 CIVIL — STATE OF CALIFORNIA

THE STATE OF CALIFORNIA OR ITS OFFICERS OR AGENTS SHALL NOT BE RESPONSIBLE FOR THE ACCURACY OR COMPLETENESS OF SCANNED COPIES OF THIS PLAN SHEET.

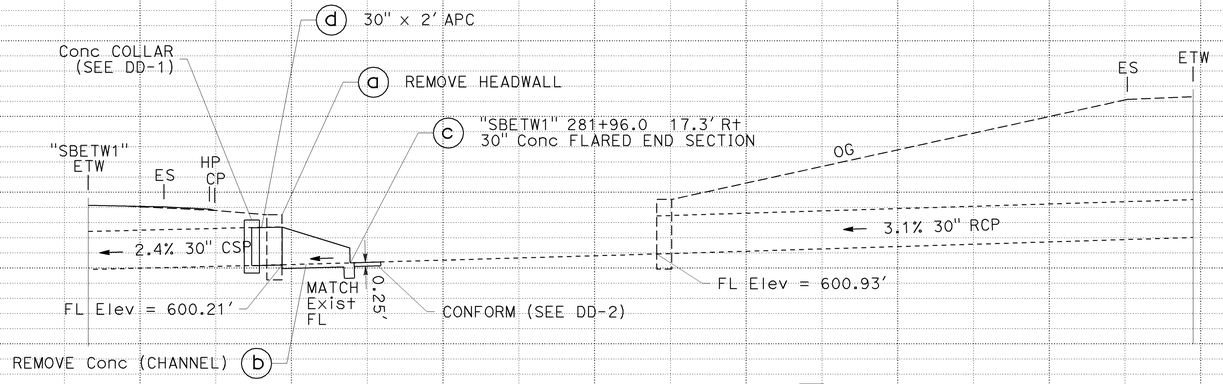

DRAINAGE SYSTEM No. 9
Sta "SBETW1" 281+96.0

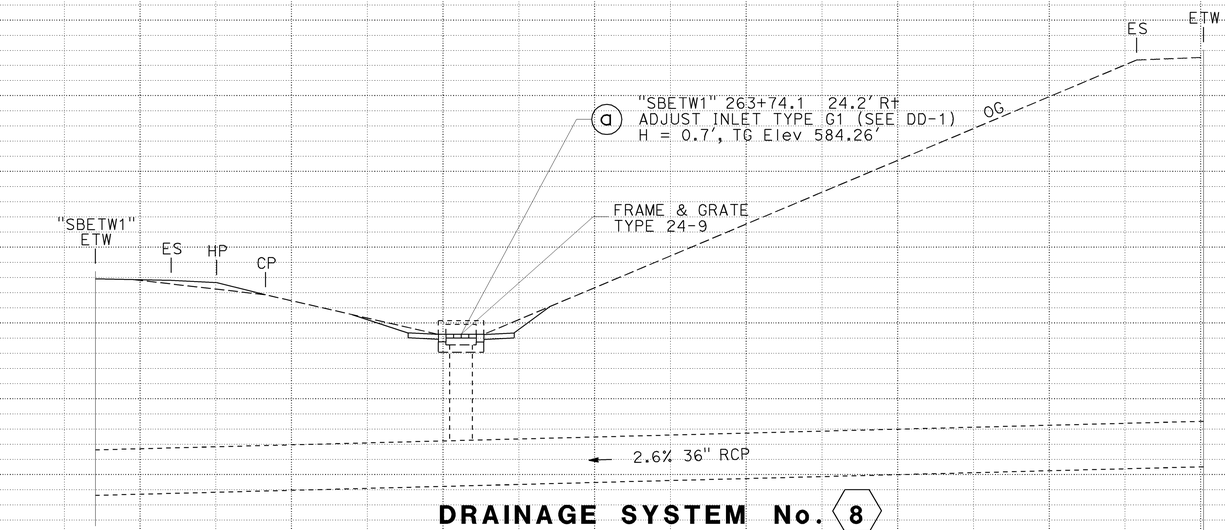

DRAINAGE SYSTEM No. 8
Sta "SBETW1" 263+74.1

DRAINAGE PROFILES
DP-4

SCALE : Horiz 1" = 5'
Vert 1" = 5'

STATION		TOTAL
CY	Exc	
	Emb	

STATE OF CALIFORNIA - DEPARTMENT OF TRANSPORTATION — DESIGN
FUNCTIONAL SUPERVISOR: STEVE WYATT
CALCULATED-DESIGNED BY: SCOTT KIRKISH
CHECKED BY: STEVE WYATT
REVISED BY / DATE REVISED

LAST REVISION DATE PLOTTED => 07-FEB-2012
TIME PLOTTED => 13:47
01-12-12

BORDER LAST REVISED 7/2/2010
USERNAME => s118989
DGN FILE => 05000203031ib004.dgn
RELATIVE BORDER SCALE IS IN INCHES 0 1 2 3
UNIT 1450
PROJECT NUMBER & PHASE 05000203031

Dist	COUNTY	ROUTE	POST MILES TOTAL PROJECT	SHEET No.	TOTAL SHEETS
05	SB	101	78.4/82.2	22	45

REGISTERED CIVIL ENGINEER 1-27-12 DATE

1-30-12
PLANS APPROVAL DATE

REGISTERED PROFESSIONAL ENGINEER SCOTT D. KIRKISH No. 76829 Exp. 12/31/12 CIVIL STATE OF CALIFORNIA

THE STATE OF CALIFORNIA OR ITS OFFICERS OR AGENTS SHALL NOT BE RESPONSIBLE FOR THE ACCURACY OR COMPLETENESS OF SCANNED COPIES OF THIS PLAN SHEET.

TOP OF GRADE ELEVATION

DRAINAGE SYSTEM No.	DRAINAGE UNIT No.	ELEVATION
1	a	850.24′
4	a	696.54′
6	a	618.13′
8	a	584.26′

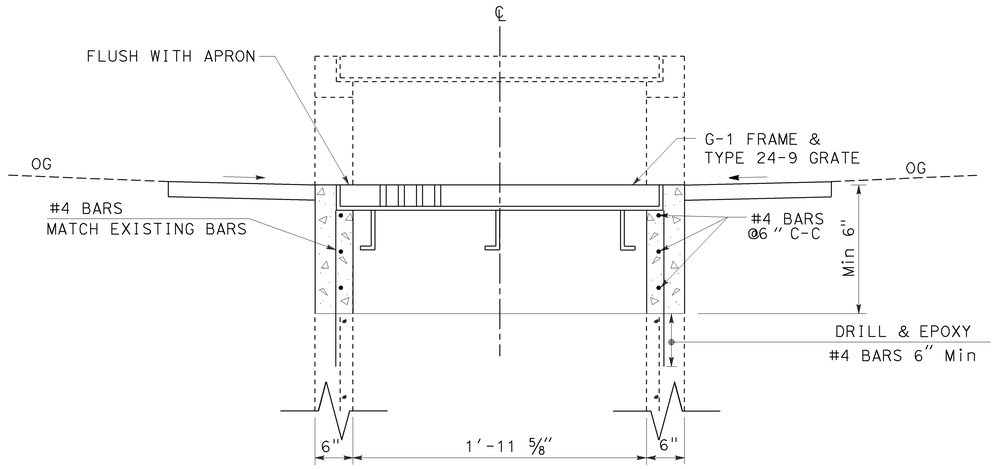

ADJUST INLET TYPE G-1

1 a, 4 a, 6 a, 8 a

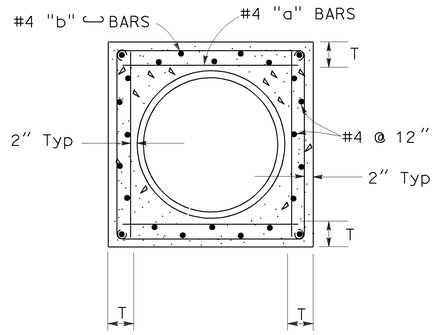

SECTION B-B

NOTES:

1. WHERE PIPE OF DIFFERENT DIAMETERS ARE JOINED WITH A CONCRETE COLLAR. "L" SHALL BE THOSE OF THE LARGER PIPE. D=D1 OR D2 WHICHEVER IS GREATER.
2. JOIN PIPES AT INVERTS.
3. "b" BARS TO BE LOCKED AROUND LONGITUDUNAL REINFORCEMENT. ROTATE BARS AS NECESSARY.
4. CONCRETE COLLAR SHOWN IS ADEQUATE FOR UP TO 40 FEET OF FILL.
5. FOR PIPE SIZE NOT LISTED USE NEXT LARGER.

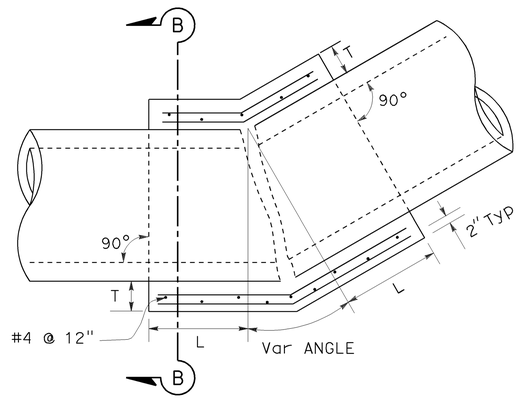

D	L	T	"a"	"b"
18"	1.0′	6"	@ 6"	@ 6"
24"	1.0′	6"	@ 6"	@ 6"
30"	1.0′	6"	@ 6"	@ 6"
36"	1.5′	8"	@ 6"	@ 6"

TYPICAL CONCRETE COLLAR FIELD BEND

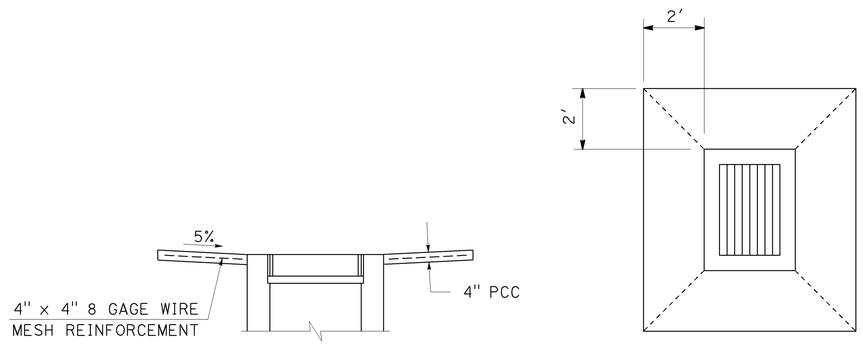

TYPICAL PCC APRON

MINOR CONCRETE (MINOR STRUCTURE)

1 a, 4 a, 6 a, 8 a

DRAINAGE DETAILS

NO SCALE **DD-1**

STATE OF CALIFORNIA - DEPARTMENT OF TRANSPORTATION
Caltrans
DESIGN
FUNCTIONAL SUPERVISOR: STEVE WYATT
CALCULATED-DESIGNED BY: SCOTT KIRKISH
CHECKED BY: STEVE WYATT
REVISED BY
DATE REVISED

LAST REVISION 01-27-12
DATE PLOTTED => 07-FEB-2012
TIME PLOTTED => 13:47

Dist	COUNTY	ROUTE	POST MILES TOTAL PROJECT	SHEET No.	TOTAL SHEETS
05	SB	101	78.4/82.2	23	45

1-27-12
REGISTERED CIVIL ENGINEER DATE

1-30-12
PLANS APPROVAL DATE

REGISTERED PROFESSIONAL ENGINEER
SCOTT D. KIRKISH
No. 76829
Exp. 12/31/12
CIVIL
STATE OF CALIFORNIA

THE STATE OF CALIFORNIA OR ITS OFFICERS OR AGENTS SHALL NOT BE RESPONSIBLE FOR THE ACCURACY OR COMPLETENESS OF SCANNED COPIES OF THIS PLAN SHEET.

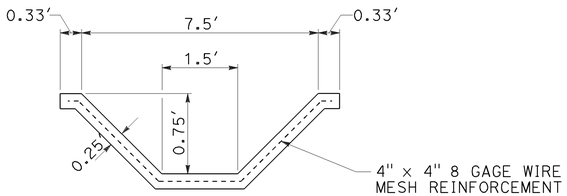

3 (e) CONCRETE (CHANNEL LINING) TYPICAL CROSS SECTION

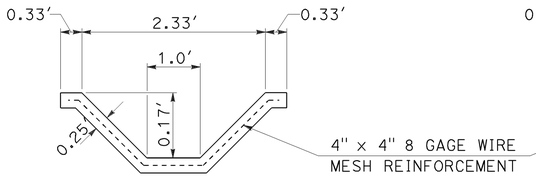

SECTION B-B
CONCRETE (CHANNEL LINING)

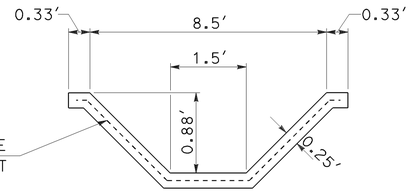

SECTION A-A
CONCRETE (CHANNEL LINING)

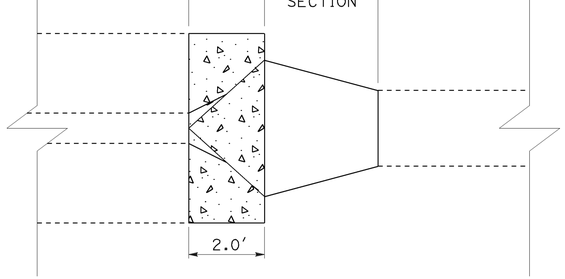

TYPICAL FLARED END SECTION CONFORM

5 (c), 7 (c), 9 (c)

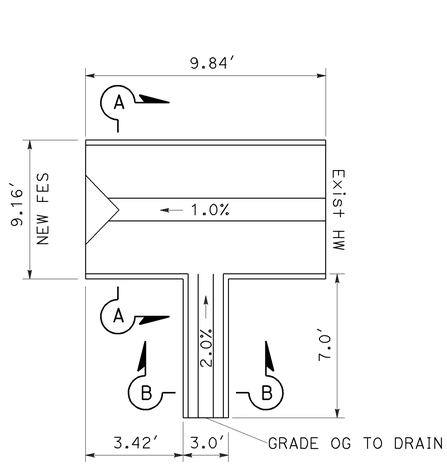

2 (e) PLAN DETAIL OF CONCRETE (CHANNEL LINING)

DRAINAGE DETAILS
NO SCALE **DD-2**

REVISED BY | DATE REVISED
SCOTT KIRKISH | STEVE WYATT
CALCULATED-DESIGNED BY | CHECKED BY
FUNCTIONAL SUPERVISOR: STEVE WYATT
STATE OF CALIFORNIA - DEPARTMENT OF TRANSPORTATION
DESIGN
Caltrans

LAST REVISION | DATE PLOTTED => 07-FEB-2012
01-27-12 | TIME PLOTTED => 13:47

BORDER LAST REVISED 7/2/2010
USERNAME => s118989
DGN FILE => 0500020303ic002.dgn
RELATIVE BORDER SCALE IS IN INCHES 0 1 2 3
UNIT 1450
PROJECT NUMBER & PHASE 05000203031

Dist	COUNTY	ROUTE	POST MILES TOTAL PROJECT	SHEET No.	TOTAL SHEETS
05	SB	101	78.4/82.2	24	45

REGISTERED CIVIL ENGINEER — DATE 1-27-12

PLANS APPROVAL DATE 1-30-12

SCOTT D. KIRKISH No. 76829 Exp. 12/31/12 CIVIL — REGISTERED PROFESSIONAL ENGINEER — STATE OF CALIFORNIA

THE STATE OF CALIFORNIA OR ITS OFFICERS OR AGENTS SHALL NOT BE RESPONSIBLE FOR THE ACCURACY OR COMPLETENESS OF SCANNED COPIES OF THIS PLAN SHEET.

APC ALLOWABLE PIPE MATERIAL

TYPE	Min THICKNESS/CLASS
PLASTIC	SMOOTH INTERIOR
RCP	SEE STANDARD Specs

DRAINAGE QUANTITIES

PLAN SHEET No.	DRAINAGE SYSTEM No. ⬡	DRAINAGE UNIT No. ○	REMOVE HEADWALL	ADJUST INLET	REMOVE Conc (CHANNEL)	MINOR CONCRETE (MINOR STRUCTURE)	18" APC	24" APC	30" APC	36" APC	18" Conc FES	24" Conc FES	30" Conc FES	36" Conc FES	CONCRETE (CHANNEL LINING)	MISCELLANEOUS IRON AND STEEL	(N) FRAME AND GRATE TYPE 24-9	(N) HEIGHT OF INLET "H"	(N) CONCRETE COLLAR	DESCRIPTION	STATION
			EA	EA	CY	CY	LF	LF	LF	LF	EA	EA	EA	EA	CY	LB	EA	FT	EA		
L-2	1	a		1		0.54										263	1	1.0		TYPE G1, TG Elev = 850.24′, PCC APRON	141+78.8 "SBETW1" 21.8′ R†
L-2	2	a	1																	REMOVE HEADWALL 7.0′ x 2.7′	145+34.1 "SBETW1" 7.9′ R†
		b			2.5															REMOVE Conc (CHANNEL)	145+34.1 "SBETW1" 7.9′ R† TO 22.3′ R†
		c					14.3												1	18" APC, CONCRETE COLLAR	145+34.1 "SBETW1" 7.9′ R† TO 22.3′ R†
		d									1									18" Conc FES	145+34.1 "SBETW1" 22.3′ R†
		e													1.1					CONCRETE (CHANNEL LINING)	145+22.7 "SBETW1" 27.2′ R† TO 145+34.1 "SBETW1" 27.2′ R† 145+34.1 "SBETW1" 7.9′ TO 32.1′ R†
L-3	3	a	1																	REMOVE HEADWALL 5.5′ x 2.4′	187+02.9 "SBETW1" 15.9′ R†
		b			5.1															REMOVE Conc (CHANNEL)	187+02.9 "SBETW1" 15.9′ R† TO 187+55.8 "SBETW1" 52.4′ R†
		c					19.7												1	18" APC, CONCRETE COLLAR	187+02.9 "SBETW1" 15.9′ R† TO 187+13.0 "SBETW1" 30.8′ R†
		d				0.91														HEADWALL	187+13.0 "SBETW1" 30.8′ R†
		e													3.9					CONCRETE (CHANNEL LINING)	187+13.0 "SBETW1" 30.8′ R† TO 187+55.8 "SBETW1" 52.4′ R†
L-4	4	a		1		0.54										263	1	1.2		TYPE G1, TG Elev = 696.54′, PCC APRON	208+28.4 "SBETW1" 24.6′ R†
L-4	5	a	1																	REMOVE HEADWALL 10.5′ x 3.9′	215+31.5 "SBETW1" 19.9′ R†
		b			0.7															REMOVE Conc (CHANNEL)	215+31.5 "SBETW1" 19.9′ R† TO 215+31.9 "SBETW1" 25.0′ R†
		c												1	0.2					36" Conc FES, CONFORM	215+31.9 "SBETW1" 25.0′ R†
		d								2.0									1	36" APC, CONCRETE COLLAR	215+31.9 "SBETW1" 23.0′ TO 25.0′ R†
L-5	6	a		1		0.54										263	1	1.7		TYPE G1, TG Elev = 618.13′, PCC APRON	238+98.8 "SBETW1" 22.2′ R†
L-6	7	a	1																	REMOVE HEADWALL 6.0′ x 2.8′ x 4.2′	255+80.7 "SBETW1" 12.0′ R†
		b			0.4															REMOVE Conc (CHANNEL)	255+80.7 "SBETW1" 12.0′ R† TO 255+79.2 "SBETW1" 15.2′ R†
		c										1			0.2					24" Conc FES, CONFORM	255+79.2 "SBETW1" 15.2′ R†
		d						2.0											1	24" APC, CONCRETE COLLAR	255+79.2 "SBETW1" 13.2′ TO 15.2′ R†
L-6	8	a		1		0.54										263	1	0.7		TYPE G1, TG Elev = 584.26′, PCC APRON	263+74.1 "SBETW1" 24.2′ R†
L-7	9	a	1																	REMOVE HEADWALL 9.0′ x 3.3′	281+96.0 "SBETW1" 12.8′ R†
		b			0.7															REMOVE Conc (CHANNEL)	281+96.0 "SBETW1" 12.8′ R† 17.3′ R†
		c											1		0.2					30" Conc FES, CONFORM	281+96.0 "SBETW1" 17.3′ R†
		d							2.0										1	30" APC, CONCRETE COLLAR	281+96.0 "SBETW1" 15.3′ TO 17.3′ R†
DRAINAGE TOTALS			5	4	9.4	3.07	34.0	2.0	2.0	2.0	1	1	1	1	5.6	1052					

(N) FOR INFORMATION ONLY. NOT A SEPARATE PAY ITEM

DRAINAGE QUANTITIES
DQ-1

REVISED BY | DATE REVISED

SCOTT KIRKISH | STEVE WYATT

CALCULATED-DESIGNED BY | CHECKED BY

FUNCTIONAL SUPERVISOR: STEVE WYATT

STATE OF CALIFORNIA - DEPARTMENT OF TRANSPORTATION

DESIGN

LAST REVISION DATE PLOTTED => 07-FEB-2012
01-27-12 TIME PLOTTED => 13:47

Dist	COUNTY	ROUTE	POST MILES TOTAL PROJECT	SHEET No.	TOTAL SHEETS
05	SB	101	78.4/82.2	25	45

REGISTERED CIVIL ENGINEER 1-27-12 DATE

1-30-12
PLANS APPROVAL DATE

REGISTERED PROFESSIONAL ENGINEER SCOTT D. KIRKISH No. 76829 Exp. 12/31/12 CIVIL STATE OF CALIFORNIA

THE STATE OF CALIFORNIA OR ITS OFFICERS OR AGENTS SHALL NOT BE RESPONSIBLE FOR THE ACCURACY OR COMPLETENESS OF SCANNED COPIES OF THIS PLAN SHEET.

STATIONARY MOUNTED CONSTRUCTION AREA SIGNS

SIGN No.	SIGN CODE	SIGN MESSAGE	PANEL SIZE	No. OF POST AND SIZE	No. OF SIGNS
A	W20-1	ROAD WORK AHEAD	60" x 60"	2-4" x 6"	4
B	W20-1	ROAD WORK AHEAD	36" x 36"	1-4" x 4"	5
C	G20-2	END ROAD WORK	36" x 18"	1-4" x 4"	3

NOTE: EXACT LOCATIONS TO BE DETERMINED BY THE ENGINEER.

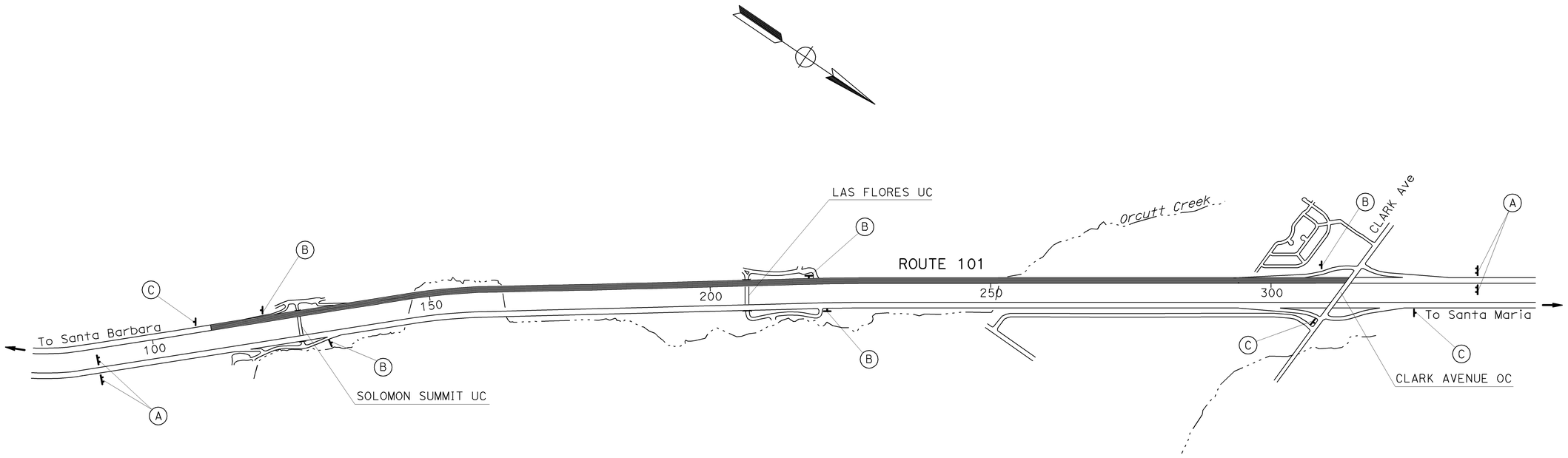

APPROVED FOR CONSTRUCTION AREA SIGN WORK ONLY

CONSTRUCTION AREA SIGNS
NO SCALE
CS-1

STATE OF CALIFORNIA - DEPARTMENT OF TRANSPORTATION
Caltrans
DESIGN

FUNCTIONAL SUPERVISOR: STEVE WYATT
CALCULATED-DESIGNED BY: SCOTT KIRKISH
CHECKED BY: STEVE WYATT
REVISED BY
DATE REVISED

LAST REVISION 01-27-12
DATE PLOTTED => 07-FEB-2012
TIME PLOTTED => 13:47

Dist	COUNTY	ROUTE	POST MILES TOTAL PROJECT	SHEET No.	TOTAL SHEETS
05	SB	101	78.4/82.2	26	45

1-27-12
REGISTERED CIVIL ENGINEER DATE

1-30-12
PLANS APPROVAL DATE

REGISTERED PROFESSIONAL ENGINEER
SCOTT D. KIRKISH
No. 76829
Exp. 12/31/12
CIVIL
STATE OF CALIFORNIA

THE STATE OF CALIFORNIA OR ITS OFFICERS OR AGENTS SHALL NOT BE RESPONSIBLE FOR THE ACCURACY OR COMPLETENESS OF SCANNED COPIES OF THIS PLAN SHEET.

TREE REMOVALS

STATION	OFFSET "SBETW1"	REMOVE TREE
		EA
Sta 145+64.5	25.7	1
Sta 146+05.6	17.0	1
Sta 226+82.1	20.7	7
Sta 232+33.8	27.7	1
Sta 232+35.7	23.7	1
Sta 232+35.9	25.7	2
Sta 232+36.6	28.1	1
Sta 232+38.0	25.3	2
Sta 242+53.7	10.1	1
Sta 243+31.5	16.6	1
Sta 255+00.3	25.3	2
Sta 278+16.5	26.6	1
Sta 279+10.9	17.0	1
Sta 279+46.4	20.5	1
Sta 283+28.5	25.5	1
Sta 284+64.1	28.4	1
Sta 289+89.9	19.5	1
Sta 290+59.9	29.4	1
Sta 290+80.1	21.7	1
Sta 292+99.3	27.3	1

FOR INFORMATION ONLY, PART OF CLEARING AND GRUBBING

TEMPORARY WATER POLLUTION CONTROL QUANTITIES

STATION	TEMPORARY CONSTRUCTION ENTRANCE	TEMPORARY CHECK DAM	TEMPORARY DRAINAGE INLET PROTECTION	TEMPORARY SOIL BINDER
	EA	LF	EA	SQYD
Sta 110+66.1 TO Sta 306+96.4	2	550	18	7720
TOTAL	2	550	18	7720

PAVEMENT STRUCTURE QUANTITIES

STATION	CLASS 2 AGGREGATE BASE	HOT MIX ASPHALT (TYPE A)	HOT MIX ASPHALT (OPEN GRADED)	RUMBLE STRIP	TACK COAT
	CY	TON	TON	STA	TON
Sta 110+66.1 TO Sta 306+96.4	2326.6	1228.8	588.9	196.3	2.2
TOTAL	2326.6	1228.8	588.9	196.3	2.2

EARTHWORK QUANTITIES

STATION	ROADWAY EXCAVATION	(N) EMBANKMENT	IMPORTED BORROW (CY)
	CY	CY	CY
Sta 110+66.1 TO Sta 306+96.4	2647	1847	2585
TOTAL	2647		2585

(N) NOT A SEPARATE PAY ITEM, FOR INFORMATION ONLY.

PAVEMENT DELINEATION QUANTITIES

LOCATION	RESET OBJECT MARKER	DELINEATOR CLASS-1	OBJECT MARKER (TYPE L-1)
	TYPE L-1	TYPE F	
	EA	EA	EA
"SBETW1" 130+72 Rt	1		
"SBETW1" 145+42 Rt	1		
"SBETW1" 187+10 Rt	1		
"SBETW1" 199+26 Rt	1		
"SBETW1" 215+31 Rt			1
"SBETW1" 239+00 Rt			1
"SBETW1" 255+80 Rt	1		
"SBETW1" 282+03 Rt	1		
"SBETW1" 285+85 Rt	1		
"SBETW1" 298+87 Rt		1	
"SBETW1" 304+00 Rt		1	
TOTAL	7	2	2

METAL BEAM GUARD RAILING QUANTITIES

STATION	LOCATION	RECONSTRUCT METAL BEAM GUARD RAILING	END ANCHOR ASSEMBLY (TYPE SFT)
		LF	EA
Sta 298+87 TO Sta 304+50	Rt OF SBETW1	563	1
TOTAL		563	1

RESET ROADSIDE SIGN QUANTITIES

LOCATION	SIGN CODE	RESET ROADSIDE SIGN (ONE POST)	REMARKS
		EA	
"SBETW1" 213+85 Rt	R6-1	1	"ONE WAY"
"SBETW1" 214+48 Rt	R5-1	1	"DO NOT ENTER"
	R5-1A		"WRONG WAY"
TOTAL		2	

SUMMARY OF QUANTITIES
Q-1

REVISED BY	DATE REVISED
SCOTT KIRKISH	STEVE WYATT
CALCULATED-DESIGNED BY	CHECKED BY
FUNCTIONAL SUPERVISOR	STEVE WYATT

STATE OF CALIFORNIA - DEPARTMENT OF TRANSPORTATION
DESIGN

LAST REVISION DATE PLOTTED => 07-FEB-2012
01-27-12 TIME PLOTTED => 13:47

Dist	COUNTY	ROUTE	POST MILES TOTAL PROJECT	SHEET No.	TOTAL SHEETS
05	SB	101	78.4/82.2	27	45

LICENSED LANDSCAPE ARCHITECT

1-30-12
PLANS APPROVAL DATE

THE STATE OF CALIFORNIA OR ITS OFFICERS OR AGENTS SHALL NOT BE RESPONSIBLE FOR THE ACCURACY OR COMPLETENESS OF SCANNED COPIES OF THIS PLAN SHEET.

LICENSED LANDSCAPE ARCHITECT — PATRICK K. BOLGER — 4582 — 11-30-2012 — STATE OF CALIFORNIA

PLANT LIST AND PLANTING SPECIFICATIONS

PLANT GROUP	PLANT No.	SYMBOL	BOTANICAL NAME	COMMON NAME	SIZE	QUANTITY EACH	HOLE SIZE (INCH) Dia	HOLE SIZE (INCH) DEPTH	BASIN TYPE	IRON SULFATE	SOIL AMEND	COMMERCIAL FERTILIZER ① PLANTING	COMMERCIAL FERTILIZER ① PLT ESTB	BASIN MULCH (CY)	STAKING	PLANTING LIMITS MINIMUM DISTANCE (ft) FROM ETW	Pvmt	FENCE	WALL	PAVED DITCH	EARTH DITCH	ON CENTER (ft)	REMARKS
A	1	⊙	QUERCUS AGRIFOLIA	COAST LIVE OAK	No. 1	105	20	12	I I	-	0.08 CY	2 Pkt	7 Oz	0.22	-	32	-	20	15	15	17	③	TREE ④⑤
	2	○	HETEROMELES ARBUTIFOLIA	TOYON	No. 1	10	20	12	I I	-	0.08 CY	2 Pkt	7 Oz	0.22	-	-	15	15	10	10	12	③	SHRUB ④⑤

APPLICABLE WHEN CIRCLED:

① - QUANTITIES SHOWN ARE "PER PLANT" UNLESS SHOWN AS SQFT OR SQYD APPLICATION RATES
2 - SUFFICIENT TO RECEIVE ROOT BALL AND AMENDMENTS IF REQUIRED
③ - AS SHOWN ON PLANS
④ - FOLIAGE PROTECTOR REQUIRED
⑤ - ROOT PROTECTOR REQUIRED

NOTE:
UNDERLINED PORTIONS OF BOTANICAL NAME INDICATE ABBREVIATIONS USED ON PLANTING PLANS.

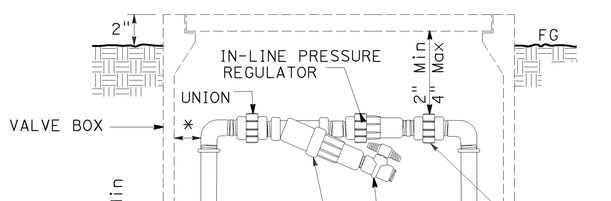

FILTER ASSEMBLY UNIT

SPRINKLER SCHEDULE

SYMBOL	TYPE	DESCRIPTION	SPRAY PATTERN	OPERATING PRESSURE (PSI)	PRESSURE COMPENSATING	PLUS/MINUS 5% DISCHARGE GALLONS PER MINUTE (GPM)	PLUS/MINUS 5% DISCHARGE GALLONS PER HOUR (GPH)	RADIUS (Ft)	WIDTH x LENGTH (Ft)	MATERIAL	INLET CONNECTION (NPT INCH)	POSITIVE-LOCKING ADJ ARC STOP	BACKSPLASH PREVENTER	DIFFUSER PIN	DISTANCE CONTROL FLAP	ADJ DISCHARGE	RISER TYPE	RISER MATERIAL PLASTIC	RISER MATERIAL GALVANIZED	RISER SIZE (IPS INCH)	RISER HEIGHT (INCH)	RISER FLOW SHUTOFF DEVICE	SWING JOINT (TYPE)	RISER SUPPORT	SPRINKLER PROTECTOR (TYPE)	REMARKS
-	D-1	EMITTER	-	30	X	-	4.0	-	-	PL	-	-	-	-	-	-	-	-	-	-	-	-	-	-	-	① ②

X IN BOX DENOTES REQUIREMENT

APPLICABLE WHEN CIRCLED BELOW:

① - Two per plant. Emitters to be installed on opposite sides of plant.
② - Emitters to be installed within planting basin at edge of rootball.

ABBREVIATIONS

Ft — feet/foot
GPM — gallons per minute
GPH — gallons per hour
Adj — adjustable
PL — plastic
B/B — brass/bronze
B/PL — brass/plastic
B/B/PL — brass/bronze/plastic
NPT — national pipe thread
IPS — iron pipe size
PSI — pounds per square inch

PLANT LIST, IRRIGATION SCHEDULE AND DETAILS
PL-1

REVISED BY | DATE REVISED
PATRICK BOLGER | KRISTEN LANGAGER
CALCULATED-DESIGNED BY | CHECKED BY
SENIOR LANDSCAPE ARCHITECT | DENNIS REEVES
STATE OF CALIFORNIA - DEPARTMENT OF TRANSPORTATION
Caltrans® LANDSCAPE ARCHITECTURE

LAST REVISION 01-27-12
DATE PLOTTED => 07-FEB-2012
TIME PLOTTED => 13:47

Dist	COUNTY	ROUTE	POST MILES TOTAL PROJECT	SHEET No.	TOTAL SHEETS
05	SB	101	78.4/82.2	28	45

LICENSED LANDSCAPE ARCHITECT

1-30-12
PLANS APPROVAL DATE

THE STATE OF CALIFORNIA OR ITS OFFICERS OR AGENTS SHALL NOT BE RESPONSIBLE FOR THE ACCURACY OR COMPLETENESS OF SCANNED COPIES OF THIS PLAN SHEET.

LICENSED LANDSCAPE ARCHITECT
PATRICK K BOLGER
Registered
11-30-2012
Renewal Date
1-27-2012
Date
STATE OF CALIFORNIA

NOTE:

FOR ACCURATE RIGHT OF WAY DATA, CONTACT RIGHT OF WAY ENGINEERING AT DISTRICT OFFICE.

LEGEND:

MULCH AREA

EXISTING VEGETATION

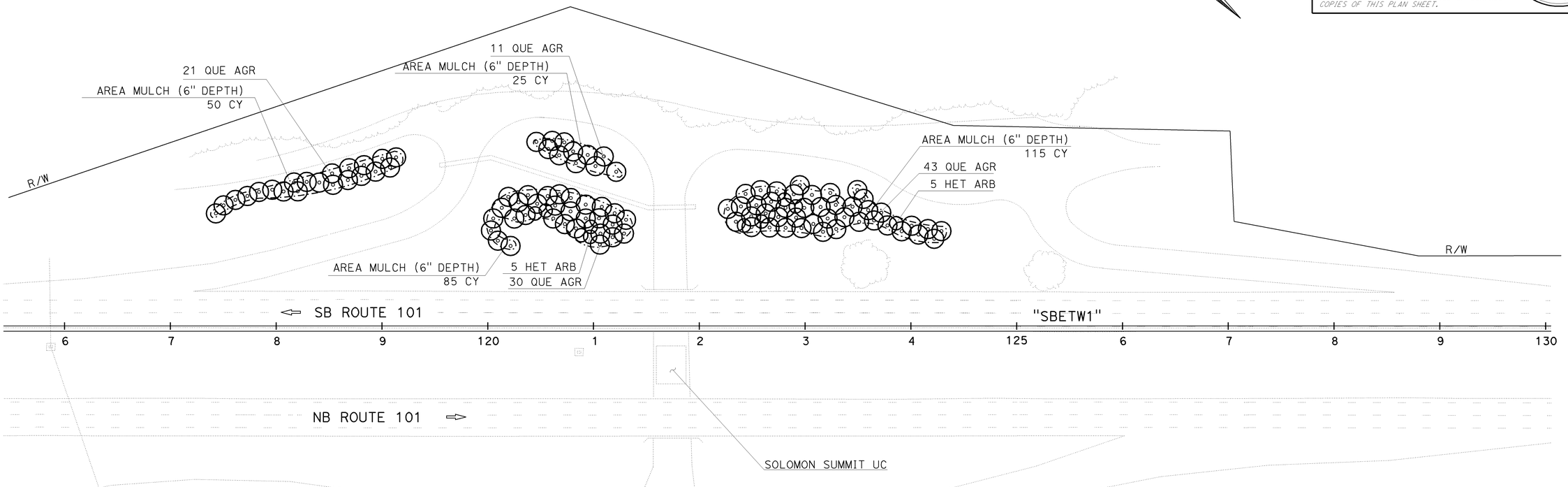

APPROVED FOR PLANTING WORK ONLY

PLANTING PLAN

SCALE : 1" = 50'

P-1

REVISED BY | DATE REVISED

PATRICK BOLGER | KRISTEN LANGAGER

CALCULATED-DESIGNED BY | CHECKED BY

SENIOR LANDSCAPE ARCHITECT

DENNIS REEVES

STATE OF CALIFORNIA - DEPARTMENT OF TRANSPORTATION

LANDSCAPE ARCHITECTURE

LAST REVISION | DATE PLOTTED => 07-FEB-2012 | TIME PLOTTED => 13:47 | 01-27-12

BORDER LAST REVISED 7/2/2010

USERNAME => s118989
DGN FILE => 0500020303ti001.dgn

RELATIVE BORDER SCALE IS IN INCHES 0 1 2 3

UNIT 1502

PROJECT NUMBER & PHASE 05000203031

Dist	COUNTY	ROUTE	POST MILES TOTAL PROJECT	SHEET No.	TOTAL SHEETS
05	SB	101	78.4/82.2	29	45

LICENSED LANDSCAPE ARCHITECT

1-30-12

PLANS APPROVAL DATE

THE STATE OF CALIFORNIA OR ITS OFFICERS OR AGENTS SHALL NOT BE RESPONSIBLE FOR THE ACCURACY OR COMPLETENESS OF SCANNED COPIES OF THIS PLAN SHEET.

LICENSED LANDSCAPE ARCHITECT Patrick K Bolger 3622 Signature 11-30-2012 Renewal Date 1-27-2012 Date STATE OF CALIFORNIA

NOTE:

FOR ACCURATE RIGHT OF WAY DATA, CONTACT RIGHT OF WAY ENGINEERING AT DISTRICT OFFICE.

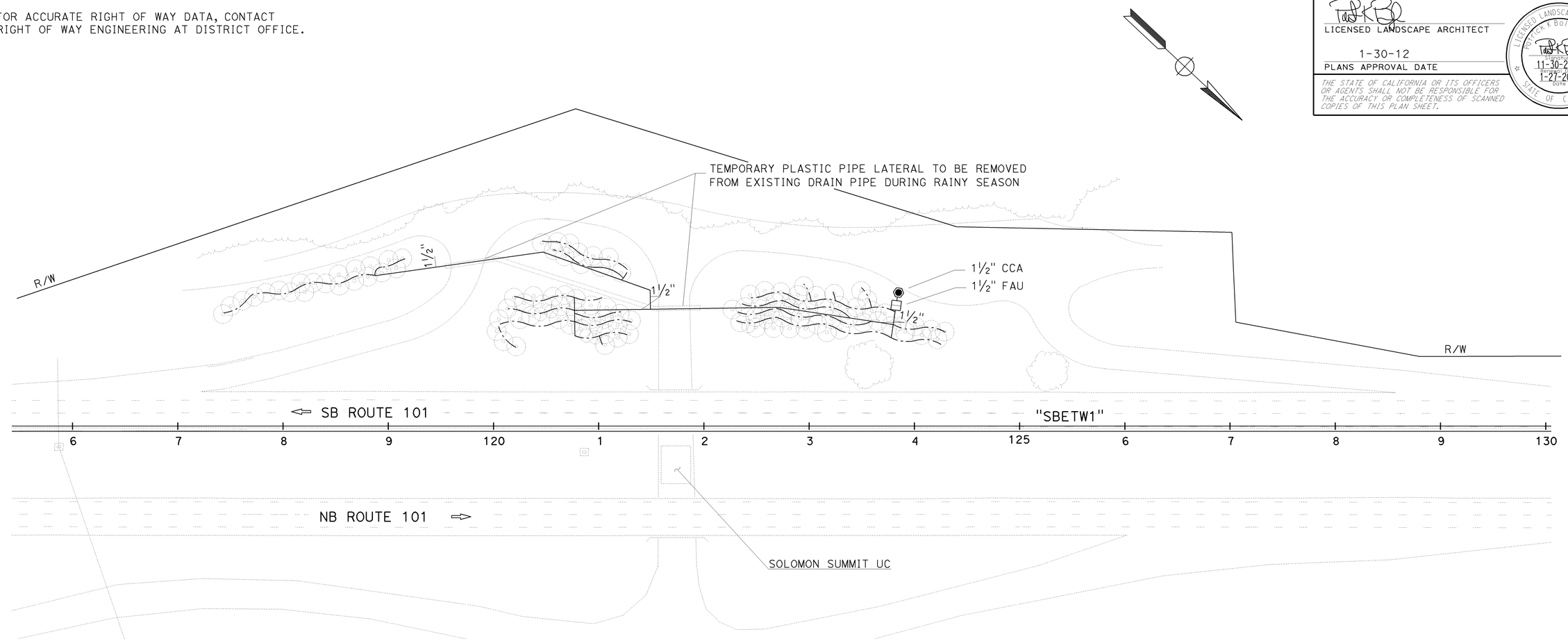

APPROVED FOR IRRIGATION WORK ONLY

IRRIGATION PLAN

SCALE : 1" = 50'

IP-1

STATE OF CALIFORNIA - DEPARTMENT OF TRANSPORTATION

Caltrans® LANDSCAPE ARCHITECTURE

SENIOR LANDSCAPE ARCHITECT: DENNIS REEVES

CALCULATED-DESIGNED BY: PATRICK BOLGER

CHECKED BY: KRISTEN LANGAGER

REVISED BY

DATE REVISED

LAST REVISION 01-27-12

DATE PLOTTED => 07-FEB-2012

TIME PLOTTED => 13:47

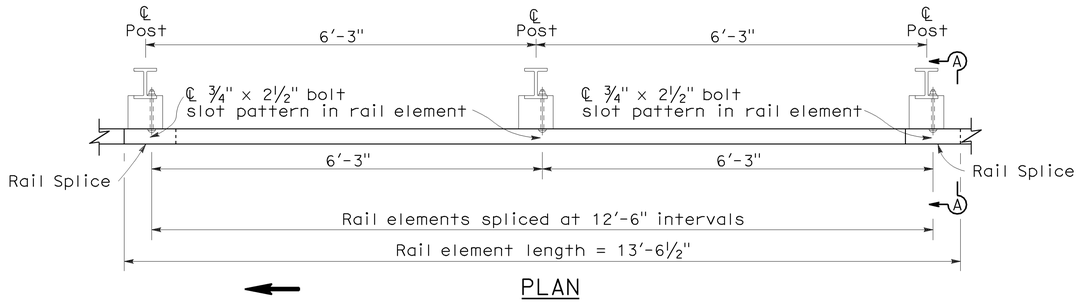

PLAN

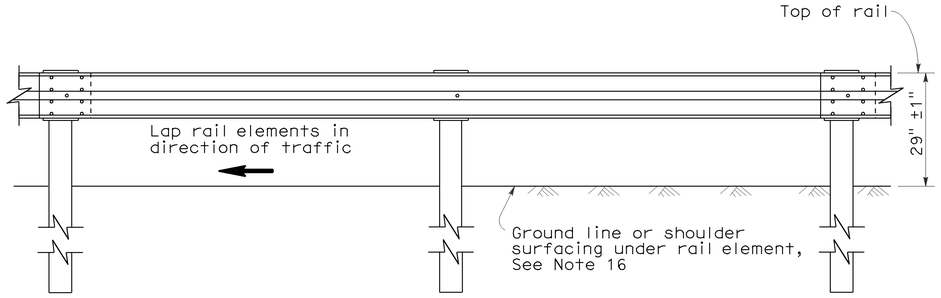

ELEVATION

METAL BEAM GUARD RAILING WITH STEEL POSTS AND NOTCHED WOOD OR NOTCHED RECYCLED PLASTIC BLOCKS

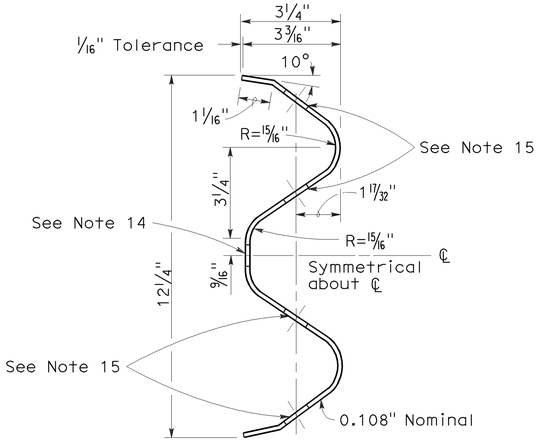

SECTION THRU RAIL ELEMENT

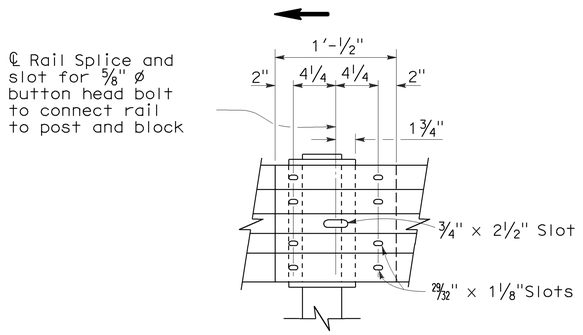

ELEVATION

RAIL ELEMENT SPLICE DETAIL

a) Connect the over lapped end of the rail elements with ⅝" ø x 1⅜" button head oval shoulder splice bolts inserted into the 29/32" x 1⅛" slots and bolted together with ⅝" ø recessed hex nuts. Recess of hex nut points toward rail element. A total of 8 bolts and nuts are to be used at each rail splice connection.

b) The ends of the rail elements are to be overlapped in the direction of traffic (see details).

c) Where end cap is to be attached to the end of a rail element, a total of 4 of the above described splice bolts and nuts are to be used.

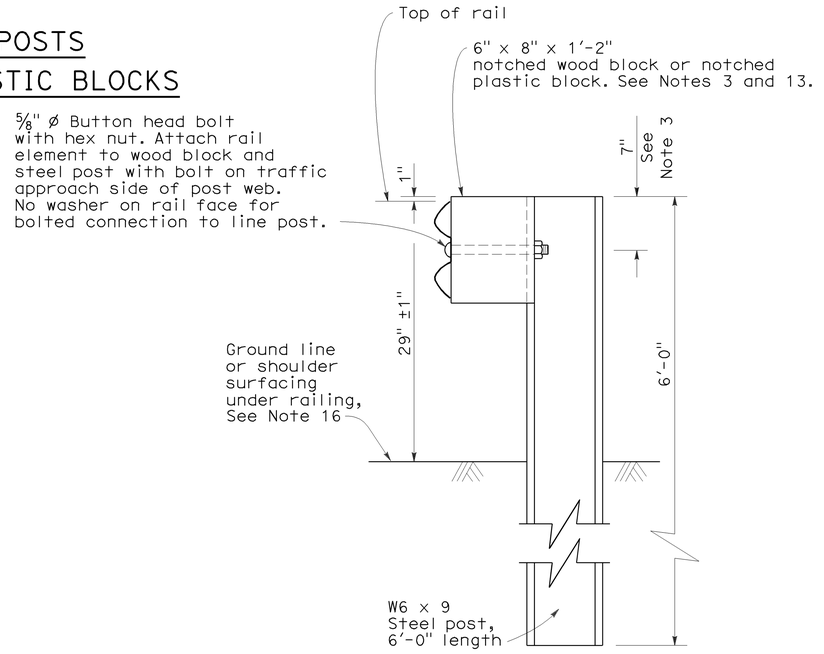

SECTION A-A

TYPICAL STEEL LINE POST INSTALLATION

See Note 4

Dist	COUNTY	ROUTE	POST MILES TOTAL PROJECT	SHEET No.	TOTAL SHEETS
05	SB	101	78.4/82.2	30	45

Randell D. Hiatt
REGISTERED CIVIL ENGINEER

May 20, 2011
PLANS APPROVAL DATE

REGISTERED PROFESSIONAL ENGINEER — Randell D. Hiatt — No. C50200 — Exp. 6-30-11 — CIVIL — STATE OF CALIFORNIA

The State of California or its officers or agents shall not be responsible for the accuracy or completeness of electronic copies of this plan sheet.

To accompany plans dated 1-30-12

NOTES:

1. For details of wood post installations, see Standard Plan A77A1.
2. For details of standard hardware used to construct guard railing, see Standard Plan A77B1.
3. For details of steel posts and notched wood blocks used to construct guard railing, see Standard Plan A77C2.
4. For additional installation details, see Standard Plan A77C3.
5. Guard railing post spacing to be 6′-3" center to center, except as otherwise noted.
6. For guard railing typical layouts, see the A77E, A77F and A77G Series of Standard Plans.
7. For terminal system end treatment details, see the A77L Series of Standard Plans. To connect railing to terminal system end treatment, transition the top of railing height at a ratio of 120:1 to terminal system end treatment height plus one 12′-6" standard railing section at the transitioned height for a horizontal connection to the end treatment.
8. For guard railing end anchor details, see Standard Plans A77H1 and A77I2.
9. For details of guard railing transition to bridge railing, see Standard Plan A77J4.
10. For additional details of guard railing connection to bridge railings, see Standard Plans A77J1, A77J2 and A77K1.
11. For dike positioning and guard railing delineation details, see Standard Plan A77C4.
12. Direction of adjacent traffic indicated by → .
13. Notched face of block faces steel post.
14. Slotted hole for bolted connection of rail element to block and post. See "Section Thru Rail Element".
15. Slotted holes for splice bolts to overlap ends of rail element. See "Section Thru Rail Element".
16. Install posts in soil.

STATE OF CALIFORNIA
DEPARTMENT OF TRANSPORTATION

METAL BEAM GUARD RAILING STANDARD RAILING SECTION (STEEL POST WITH NOTCHED WOOD OR NOTCHED RECYCLED PLASTIC BLOCK)

NO SCALE

RSP A77A2 DATED MAY 20, 2011 SUPERSEDES STANDARD PLAN A77A2
DATED MAY 1, 2006 - PAGE 42 OF THE STANDARD PLANS BOOK DATED MAY 2006.

REVISED STANDARD PLAN RSP A77A2

2006 REVISED STANDARD PLAN RSP A77A2

5-4-11

Dist	COUNTY	ROUTE	POST MILES TOTAL PROJECT	SHEET No.	TOTAL SHEETS
05	SB	101	78.4/82.2	31	45

Randell D. Hiatt
REGISTERED CIVIL ENGINEER

May 20, 2011
PLANS APPROVAL DATE

REGISTERED PROFESSIONAL ENGINEER
Randell D. Hiatt
No. C50200
Exp. 6-30-11
CIVIL
STATE OF CALIFORNIA

The State of California or its officers or agents shall not be responsible for the accuracy or completeness of electronic copies of this plan sheet.

To accompany plans dated 1-30-12

NOTES:

1. When necessary to place dike in front of face of guard railing, only Type C dike may be used. For dike details, see Standard Plan A87B.
2. For standard railing post embedment, see Standard Plans A77C3.
3. Guard railing delineation to be used where shown on the Project Plans.
4. When dike or curb is placed under guard railing, the maximum height of the dike or curb shall be 4". Mountable dike should not be used. For dike and curb details, see Standard Plans A87A and A87B.
5. For details of typical distance between the face of rail and hinge point, see Standard Plan A77C3.
6. For steel line posts, use ¼ - 20 self-tapping screws in 0.22" diameter holes or ¼" bolts in 9/32" diameter holes.

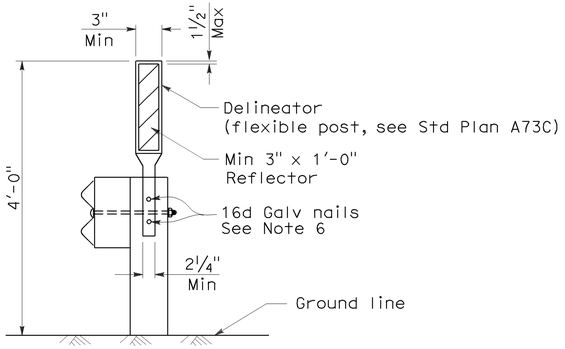

GUARD RAILING DELINEATION
See Note 3

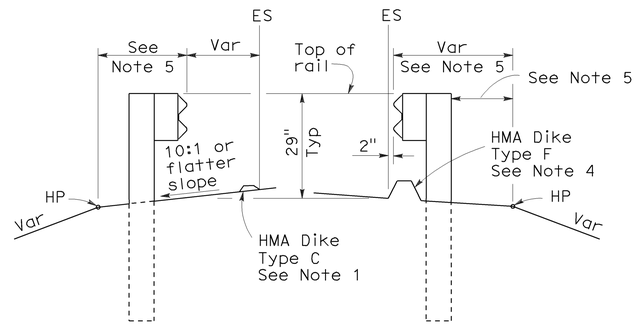

DIKE POSITIONING
See Note 1

STATE OF CALIFORNIA
DEPARTMENT OF TRANSPORTATION

METAL BEAM GUARD RAILING TYPICAL RAILING DELINEATION AND DIKE POSITIONING DETAILS

NO SCALE

RSP A77C4 DATED MAY 20, 2011 SUPERSEDES RSP A77C4 DATED JUNE 6, 2008 AND STANDARD PLAN A77C4 DATED MAY 1, 2006 - PAGE 47 OF THE STANDARD PLANS BOOK DATED MAY 2006.

REVISED STANDARD PLAN RSP A77C4

2006 REVISED STANDARD PLAN RSP A77C4

3-10-11

Dist	COUNTY	ROUTE	POST MILES TOTAL PROJECT	SHEET No.	TOTAL SHEETS
05	SB	101	78.4/82.2	32	45

Randell D. Hiatt
REGISTERED CIVIL ENGINEER

May 20, 2011
PLANS APPROVAL DATE

REGISTERED PROFESSIONAL ENGINEER
Randell D. Hiatt
No. C50200
Exp. 6-30-11
CIVIL
STATE OF CALIFORNIA

The State of California or its officers or agents shall not be responsible for the accuracy or completeness of electronic copies of this plan sheet.

To accompany plans dated 1-30-12

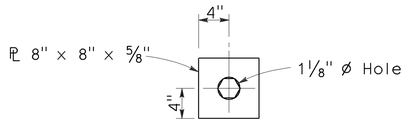

DETAIL A
CABLE CONNECTION END PLATE

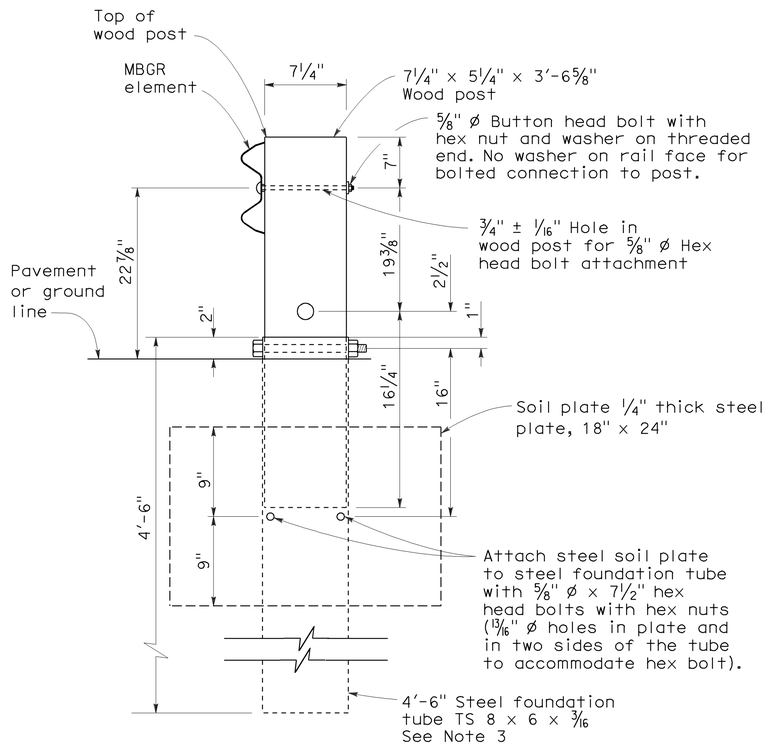

SECTION A-A

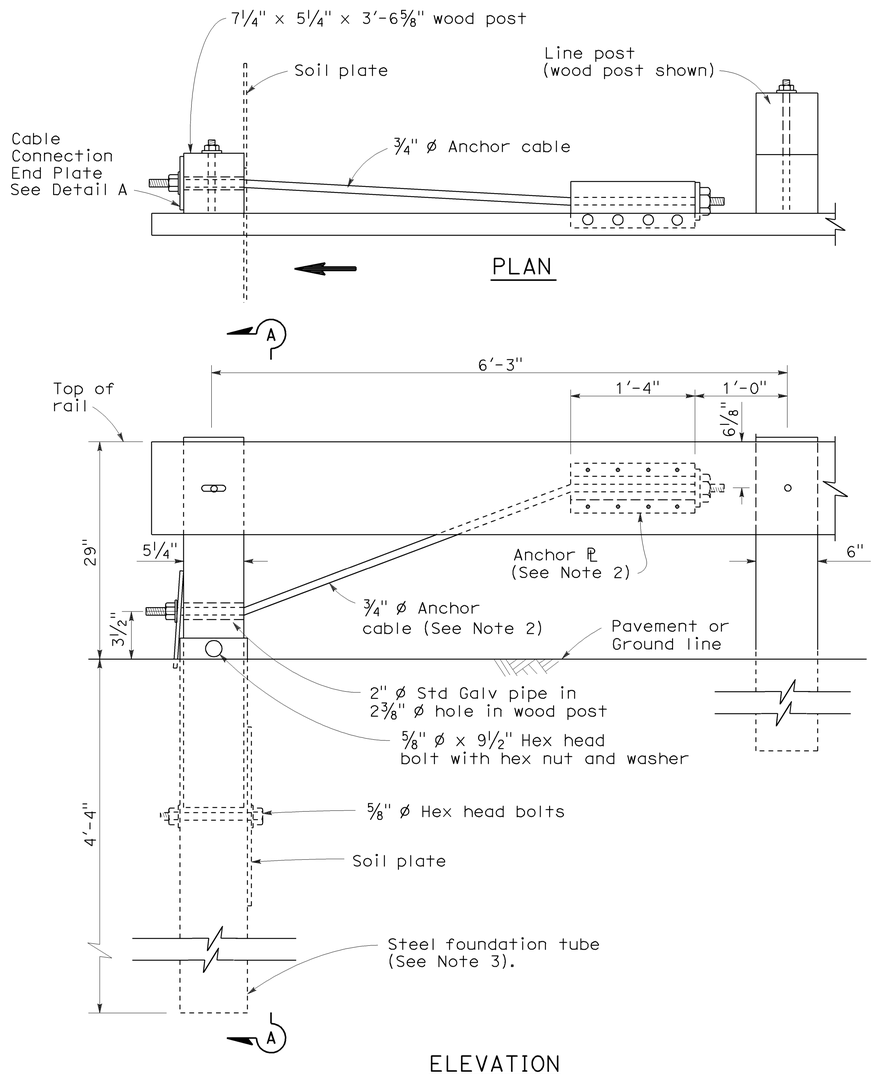

ELEVATION
END ANCHOR ASSEMBLY (TYPE SFT)
See Note 1

NOTES:

1. See the A77E, A77F and A77G series of Standard Plans for typical use of End Anchor Assembly (Type SFT).
2. For details of the anchor plate and 3/4" cable, see Standard Plan A77H3.
3. A 6'-0" length steel foundation tube, TS 8 x 6 x 3/16, without a soil plate, may be furnished and installed in place of the 4'-6" length steel foundation tube and soil plate shown. Minimum embedment of the 6'-0" length tube shall be 5'-9". A 5/8" ø hex head bolt and nut shall be installed in the hole in the 6'-0" length tube to keep the wood post from dropping into the tube.
4. Direction of traffic indicated by →.
5. Install line post, steel foundation tube and soil plate in soil.

STATE OF CALIFORNIA
DEPARTMENT OF TRANSPORTATION

METAL RAILING END ANCHOR ASSEMBLY (TYPE SFT)

NO SCALE

RSP A77H1 DATED MAY 20, 2011 SUPERSEDES STANDARD PLAN A77H1
DATED MAY 1, 2006 - PAGE 67 OF THE STANDARD PLANS BOOK DATED MAY 2006.

REVISED STANDARD PLAN RSP A77H1

2006 REVISED STANDARD PLAN RSP A77H1

7-10-07

DIST	COUNTY	ROUTE	POST MILES TOTAL PROJECT	SHEET NO.	TOTAL SHEETS
05	SB	101	78.4/82.2	33	45

Raymond Don Tsztoo
REGISTERED CIVIL ENGINEER

January 18, 2008
PLANS APPROVAL DATE

REGISTERED PROFESSIONAL ENGINEER — Raymond Don Tsztoo — No. C37332 — Exp. 6-30-08 — CIVIL — STATE OF CALIFORNIA

The State of California or its officers or agents shall not be responsible for the accuracy or completeness of electronic copies of this plan sheet.

To accompany plans dated 1-30-12

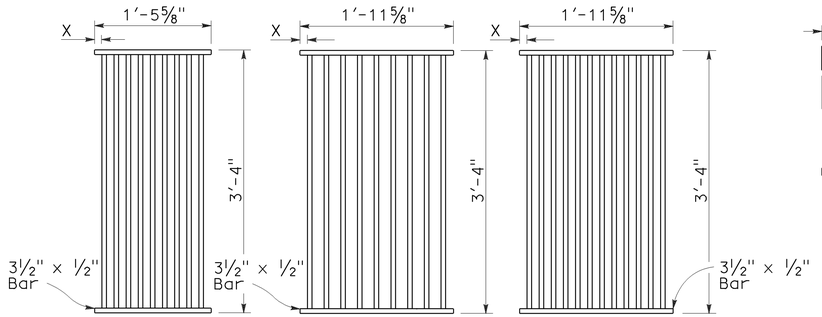

TYPE 18-9

1⅜" Clear spacing. Use within the roadbed on highways where bicycles and pedestrians are excluded.

TYPE 24-9

2" Clear spacing. Use in locations off the roadbed on all types of highways.

TYPE 24-12

1⅜" Clear spacing. Use within the roadbed on highways where bicycles and pedestrians are excluded.

RECTANGULAR GRATE DETAILS

(See table below)

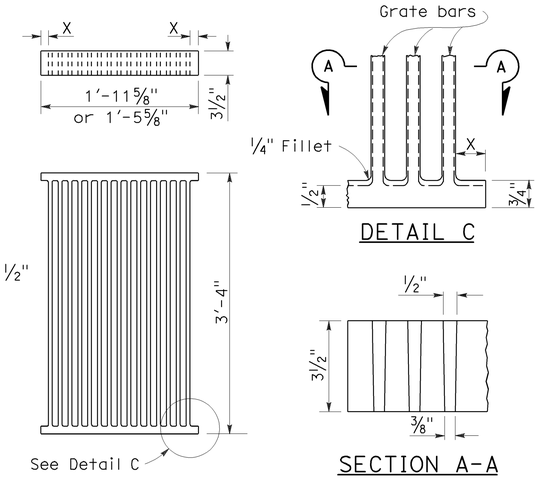

DETAIL C

SECTION A-A

ALTERNATIVE CAST NODULAR IRON GRATE OR CAST STEEL GRATE

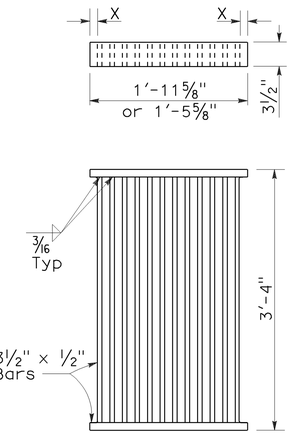

ALTERNATIVE WELDED GRATE

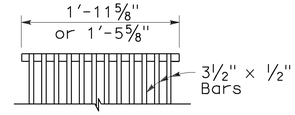

CAST END BLOCK

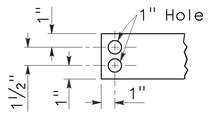

END OF BAR

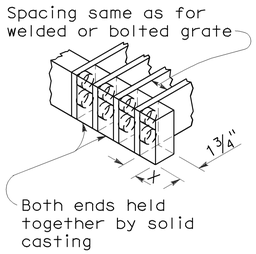

ALTERNATIVE CAST NODULAR IRON OR CAST STEEL END BLOCK GRATE

NOTES:

1. Grate type numbers refer to approximate width of grate in inches and number of bars, respectively.
2. Contractor has the option of using cast nodular iron, cast steel, welded, bolted, or cast end block grate.
3. See Special Provisions for requirements pertaining to galvanizing or asphalt dipping of grates and frames.
4. Rounded top of bars optional on all grates.
5. Pipe inlets with a grate shall be placed so that bars parallel direction of principle surface flow.
6. Full penetration butt welds may be substituted for the fillet welds on all anchors.
7. Standard square, hexagon, round or equivalent headed anchors may be substituted for the right angle hooks on the anchors shown on this plan.
8. Grate and frame weights are based on welded grates (weights of face angles, steps, protection bars, etc. are not included).

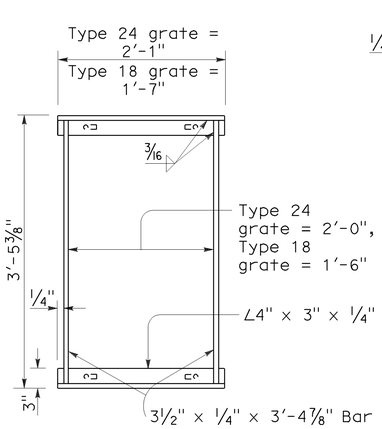

TYPICAL FRAME

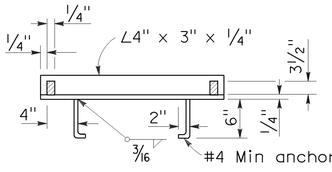

CROSS SECTION
(Thru frame)

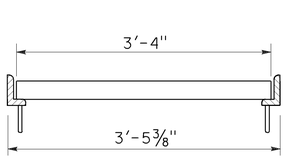

LONGITUDINAL SECTION
(Thru frame and grate)

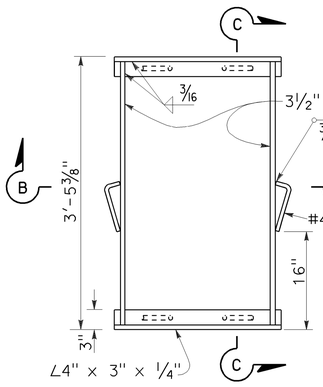

TYPICAL FRAME

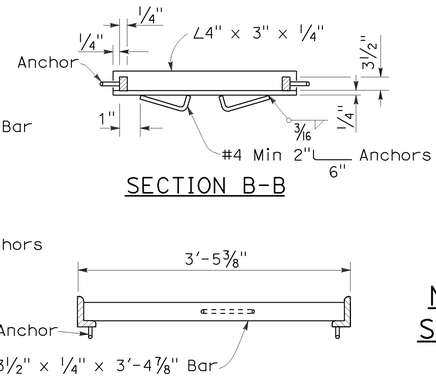

SECTION B-B

SECTION C-C

RECTANGULAR FRAME DETAILS

(For all rectangular grates)

ALTERNATIVE ANCHOR FOR RECTANGULAR FRAME

(For details not shown, See Rectangular Frame Details)

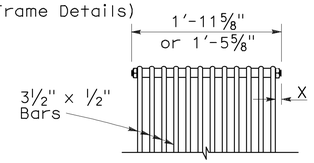

BOLTED END BLOCK

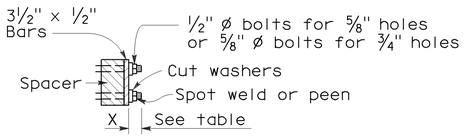

BOLTING DETAIL

ALTERNATIVE BOLTED GRATE

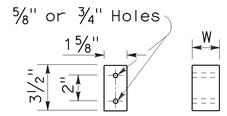

BAR SPACER

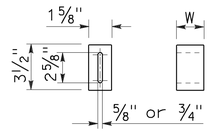

ALTERNATIVE SPACER
W = 1⅜" or 2"

GRATE BAR SPACING TABLE

TYPE	No. OF BARS	CLEAR BAR SPACING	X
18-9	9	1⅜"	1 1/16"
24-9	9	2"	1 9/16"
24-12	12	1⅜"	1¼"

INLET TYPE	COVER TYPE	WEIGHT LB
OS	PLATE	174
OL-7	PLATE	170
OL-10	PLATE	170
OL-14	PLATE	170
OL-21	PLATE	170
OCP	PLATE	112
OCPI	PLATE	112
OCPI	REDWOOD	42
OMP	PLATE	177
OMPI	PLATE	177

INLET TYPE	GRATE TYPE	No. OF GRATES	WEIGHT LB
GDO	24-12	2	634
GOL-7	24-12	1	326
GOL-10	24-12	1	326
GO,G1,G2,G3,G4 (TYPE 24)	24-9	1	263
	24-12	1	326
G4 (TYPE 18),G5,G6	18-9	1	249
GT1	18-9	2	498
GT2	18-9	2	498
GT3	24-12	2	652
GT4	24-12	2	652
TRASH RACK			22

BASIS FOR MISC IRON & STEEL FINAL PAY WEIGHTS FOR DRAINAGE INLETS

(See General Notes, No 8)

STATE OF CALIFORNIA
DEPARTMENT OF TRANSPORTATION

GRATE DETAILS

NO SCALE

RSP D77A DATED JANUARY 18, 2008 SUPERSEDES STANDARD PLAN D77A DATED MAY 1, 2006 - PAGE 155 OF THE STANDARD PLANS BOOK DATED MAY 2006.

REVISED STANDARD PLAN RSP D77A

2006 REVISED STANDARD PLAN RSP D77A

12-14-07

DIST	COUNTY	ROUTE	POST MILES TOTAL PROJECT	SHEET NO.	TOTAL SHEETS
05	SB	101	78.4/82.2	34	45

Gregory A. Balzer
LICENSED LANDSCAPE ARCHITECT

June 5, 2009
PLANS APPROVAL DATE

LICENSED LANDSCAPE ARCHITECT — Gregory A. Balzer — 2576 — 10-31-10 Expiration Date — 2-28-11 Renewal Date — 5-14-09 Date — STATE OF CALIFORNIA

The State of California or its officers or agents shall not be responsible for the accuracy or completeness of electronic copies of this plan sheet.

To accompany plans dated 1-30-12

A

AB	aggregate base
ABS	acrylonitrile-butadiene-styrene
AC	asphalt concrete
Adj	adjacent/adjustable
AIC	auxiliary irrigation controller
Alt	alternative
AMEND	amendment
ARV	air release valve
AUTO	automatic
AUX	auxiliary
AVB	atmospheric vacuum breaker

B

B&B	balled and burlapped
B/B	brass/bronze
B/B/PL	brass/bronze/plastic
B/PL	brass/plastic
BFM	bonded fiber matrix
Bit Ctd	bituminous coated
BP	booster pump
BPA	backflow preventer assembly
BPAE	backflow preventer assembly in enclosure
BPE	backflow preventer enclosure
BV	ball valve

C

CAP	corrugated aluminum pipe
CARV	combination air release valve
CCA	cam coupler assembly
CEC	controller enclosure cabinet
CHDPE	corrugated high density polyethylene
CL	chain link
CNC	control and neutral conductors
Conc	concrete
Cond	conduit
CSP	corrugated steel pipe
CST	center strip
CV	check valve

D

Dia	diameter
DIP	ductile iron pipe
DN	diameter nominal

E

EA	each
Elect	electric/electrical
Elev	elevation
ENCL	enclosure
EP	edge of pavement
ES	edge of shoulder
EST	end strip
ESTB	establishment
ETW	edge of traveled way

F

F	full circle
F/P	full/part circle
FAU	filter assembly unit
FCV	flow control valve
FERT	fertilizer
FG	finished grade
FIPT	female iron pipe thread
FIS	fertilizer injector system
FL	flow line
FM	flow monitor
FS	flow sensor
Ft	foot/feet
FV	flush valve

G

GAL	Gallon(s)
Galv	galvanized
GARV	garden valve
GPH	gallons per hour
GPM	gallons per minute
GSP	galvanized steel pipe
GV	gate valve

H

H	half circle
HB	hose bib
HDPE	high density polyethylene
HP	horsepower/hinge point
HPL	high pressure line
Hwy	highway

I

IC	irrigation controller
ICC	irrigation controller(s) in controller enclosure cabinet
ID	inside diameter
In	inches
IFS	irrigation filtration system
IPS	iron pipe size
IPT	iron pipe thread
Irr	irrigation

L

L	length
LF	linear foot

M

Max	maximum
MBGR	metal beam guard railing
MCV	manual control valve
MIC	master irrigation controller
Min	minimum
MIPT	male iron pipe thread
Misc	miscellaneous
Mtl	material
MVP	maintenance vehicle pullout

N

NCN	no common name
NL	nozzle line
No.	number
NPT	national pipe thread

O

O/C	on center
OD	outside diameter
Oz	ounce

P

P	part circle
PB	pull box
PCC	portland cement concrete
PE	polyethylene
Pkt	packet
PL	plastic
PLT	plant/planting
PLT ESTB	plant establishment
PM	post mile
PR	pressure rated
PRLV	pressure relief valve
PSFM	polymer stabilized fiber matrix
PSI	pounds per square inch
PRV	pressure reducing valve
PVC	polyvinyl chloride
Pvmt	pavement

Q

Q	quarter circle
QCV	quick coupling valve

R

R	radius
RCP	reinforced concrete pipe
RCV	remote control valve
RCVM	remote control valve (master)
RCVMF	remote control valve (master) w/ flow meter
RCW	recycled/reclaimed water
RECP	rolled erosion control product
REQ	required
R/W	right of way

S

S	slip
SCC	sprinkler control conduit
SCH	schedule
SF	state-furnished
Shld	shoulder
SQFT	square foot/feet
SQYD	square yard(s)
SST	side strip
Sta	station
Std	standard
SW	sidewalk/sound wall

T

T	third circle/thread
TLS	truck loading standpipe
TQ	three quarter circle
TRM	turf reinforcement mat
TRVD	traveled
TT	two third circle
Typ	typical

U

UG	underground

V

VAU	valve assembly unit

W

W	width
W/	with
WM	water meter
WS	wye strainer
WSP	welded steel pipe
WWM	welded wire mesh

NOTE:
FOR ADDITIONAL ABBREVIATIONS, SEE STANDARD PLANS A10A AND A10B.

STATE OF CALIFORNIA
DEPARTMENT OF TRANSPORTATION

PLANTING AND IRRIGATION ABBREVIATIONS

NO SCALE

RSP H1 DATED JUNE 5, 2009 SUPERSEDES STANDARD PLAN H1
DATED MAY 1, 2006 - PAGE 201 OF THE STANDARD PLANS BOOK DATED MAY 2006.

REVISED STANDARD PLAN RSP H1

2006 REVISED STANDARD PLAN RSP H1

5-28-09

DIST	COUNTY	ROUTE	POST MILES TOTAL PROJECT	SHEET NO.	TOTAL SHEETS
05	SB	101	78.4/82.2	35	45

Gregory A. Balzer
LICENSED LANDSCAPE ARCHITECT

June 5, 2009
PLANS APPROVAL DATE

LICENSED LANDSCAPE ARCHITECT
Gregory A. Balzer 2576
Signature
2-28-11
Renewal Date
5-14-09
Date
STATE OF CALIFORNIA

The State of California or its officers or agents shall not be responsible for the accuracy or completeness of electronic copies of this plan sheet.

To accompany plans dated 1-30-12

EXISTING	PROPOSED	ITEM DESCRIPTION
		WATER METER (WM)
		BACKFLOW PREVENTER ASSEMBLY (BPA)
		BACKFLOW PREVENTER ASSEMBLY IN ENCLOSURE (BPAE)
		BACKFLOW PREVENTER ENCLOSURE (BPE)
		BOOSTER PUMP (BP)
		TRUCK LOADING STANDPIPE (TLS)
FS	FS	FLOW SENSOR (FS)
		MASTER IRRIGATION CONTROLLER (MIC)
		AUXILIARY IRRIGATION CONTROLLER (AIC)
		IRRIGATION CONTROLLER (IC)/ IRRIGATION CONTROLLER (IC) (BATTERY) IRRIGATION CONTROLLER (IC) (SOLAR)
		IRRIGATION CONTROLLER(S) IN CONTROLLER ENCLOSURE CABINET (ICC)
		CONTROL AND NEUTRAL CONDUCTORS (CNC)
SCC	SCC	SPRINKLER CONTROL CONDUIT (SCC)
		IRRIGATION CROSSOVER
		EXTEND IRRIGATION CROSSOVER
		IRRIGATION SLEEVE
dip	DIP	DUCTILE IRON PIPE (SUPPLY LINE) (MAIN) (DIP)
		GALVANIZED STEEL PIPE (SUPPLY LINE) (MAIN) (GSP)
		GALVANIZED STEEL PIPE (SUPPLY LINE) (LATERAL) (GSP)
		PLASTIC PIPE (PR 200) (SUPPLY LINE) (MAIN)
		PLASTIC PIPE (PR 200) (SUPPLY LINE) (LATERAL)
		PLASTIC PIPE (IRRIGATION LINE)
		REMOTE CONTROL VALVE (RCV) REMOTE CONTROL VALVE (MASTER) (RCVM) REMOTE CONTROL VALVE (MASTER) W/FLOW METER (RCVMF)
		MANUAL CONTROL VALVE (MCV)
		VALVE ASSEMBLY UNIT (VAU)
		WYE STRAINER (WS)
		FILTER ASSEMBLY UNIT (FAU)
		GATE VALVE (GV)
		BALL VALVE (BV)

EXISTING	PROPOSED	ITEM DESCRIPTION
		QUICK COUPLING VALVE (QCV)
		CAM COUPLER ASSEMBLY (CCA)
		PRESSURE REDUCING VALVE (PRV)
		PRESSURE RELIEF VALVE (PRLV)
		FLOW CONTROL VALVE (FCV)
		COMBINATION AIR RELEASE VALVE (CARV)
		CHECK VALVE (CV)
		FLUSH VALVE (FV)
		NOZZLE LINE W/TURNING UNION
		IRRIGATION SYSTEM
		IRRIGATION SYSTEM TO BE REMOVED
		CHAIN LINK GATE
		QUICK COUPLING VALVE W/SPRINKLER PROTECTOR
3	3	SPRINKLER W/SPRINKLER PROTECTOR
		CONNECT TO EXISTING SYSTEM
		CAP
		CAP EXISTING

VALVE CODE

RCV SIZE
IRRIGATION CONTROLLER
CONTROLLER STATION
VALVE IN PARALLEL (IF APPLICABLE)
GPM
QUANTITY OF SPRINKLERS (WHEN SHOWN)

* 2½"-A-2b-40 -60

MCV SIZE
VALVE NUMBER
GPM
QUANTITY OF TYPE SPRINKLERS (WHEN SHOWN)

* 2"-3-30 -50

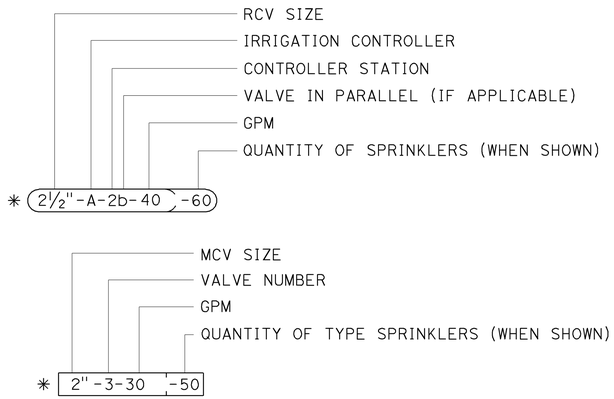

* VALVE CODES FOR EXISTING VALVES ARE SHOWN IN A DASHED ENCLOSURE.

STATE OF CALIFORNIA
DEPARTMENT OF TRANSPORTATION

PLANTING AND IRRIGATION SYMBOLS

NO SCALE

RSP H2 DATED JUNE 5, 2009 SUPERSEDES RSP H2 DATED MARCH 7, 2008 AND STANDARD PLAN H2 DATED MAY 1, 2006 - PAGE 202 OF THE STANDARD PLANS BOOK DATED MAY 2006.

REVISED STANDARD PLAN RSP H2

2006 REVISED STANDARD PLAN RSP H2

5-11-09

DIST	COUNTY	ROUTE	POST MILES TOTAL PROJECT	SHEET NO.	TOTAL SHEETS
05	SB	101	78.4/82.2	36	45

Gregory A. Balzer
LICENSED LANDSCAPE ARCHITECT

June 5, 2009
PLANS APPROVAL DATE

10-31-10
2-28-11
Renewal Date
5-14-09
Date

LICENSED LANDSCAPE ARCHITECT — Gregory A. Balzer — 2576 — STATE OF CALIFORNIA

The State of California or its officers or agents shall not be responsible for the accuracy or completeness of electronic copies of this plan sheet.

To accompany plans dated 1-30-12

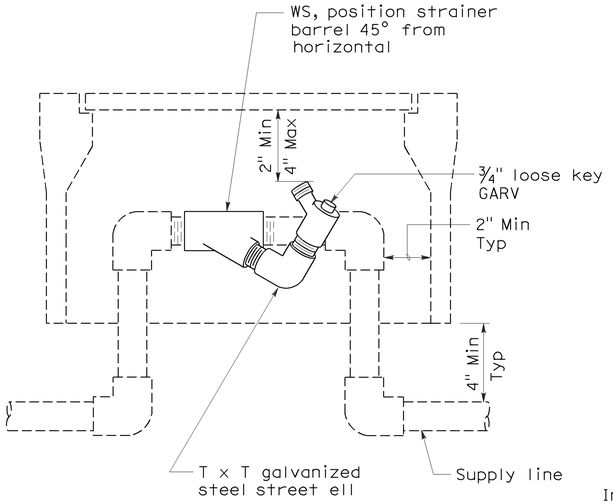

ELEVATION
WYE STRAINER

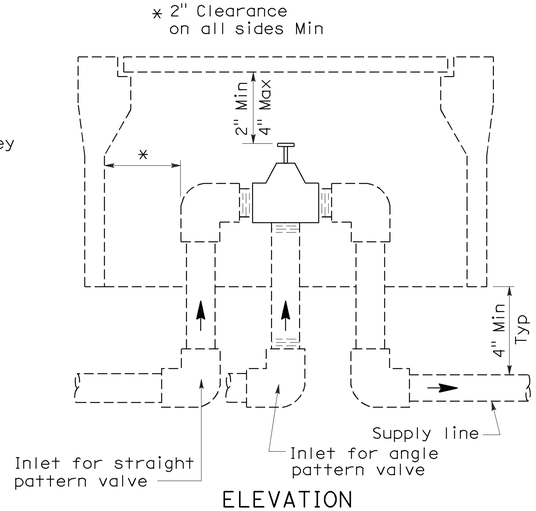

ELEVATION
VALVE

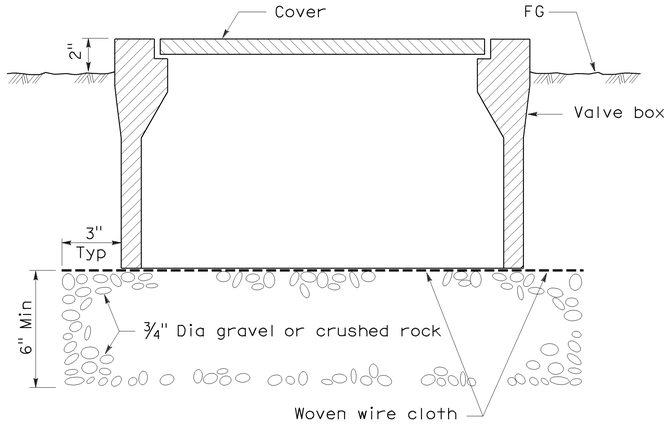

SECTION
VALVE BOX

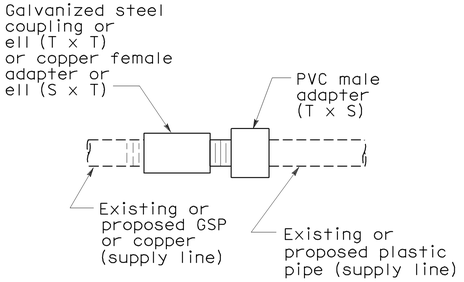

PLAN
GALVANIZED OR COPPER PIPE CONNECTION TO PLASTIC PIPE

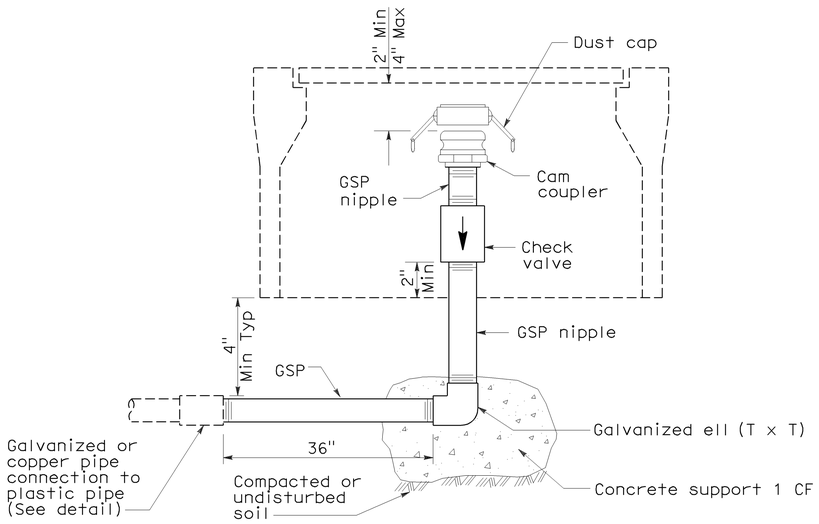

ELEVATION
CAM COUPLER ASSEMBLY

Identification label:
For abbreviations see Revised Standard Plans H1 and H2.
For controller and station number see project plans.

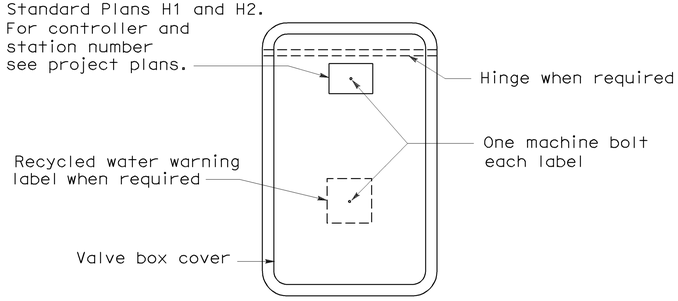

PLAN

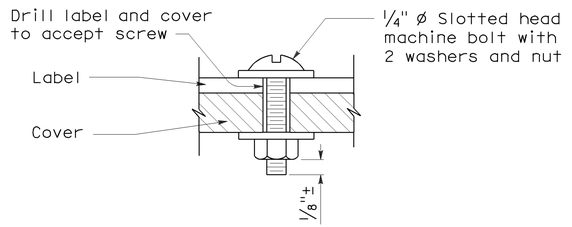

SECTION
VALVE BOX IDENTIFICATION

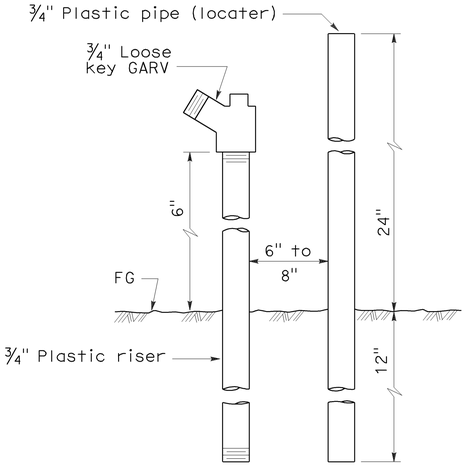

ELEVATION
FLUSH VALVE

STATE OF CALIFORNIA
DEPARTMENT OF TRANSPORTATION

PLANTING AND IRRIGATION DETAILS

NO SCALE

RSP H7 DATED JUNE 5, 2009 SUPERSEDES STANDARD PLAN H7
DATED MAY 1, 2006 - PAGE 207 OF THE STANDARD PLANS BOOK DATED MAY 2006.

REVISED STANDARD PLAN RSP H7

2006 REVISED STANDARD PLAN RSP H7

DIST	COUNTY	ROUTE	POST MILES TOTAL PROJECT	SHEET NO.	TOTAL SHEETS
05	SB	101	78.4/82.2	37	45

Randell D. Hiatt
REGISTERED CIVIL ENGINEER

June 6, 2008
PLANS APPROVAL DATE

REGISTERED PROFESSIONAL ENGINEER
Randell D. Hiatt
No. C50200
Exp. 6-30-09
CIVIL
STATE OF CALIFORNIA

The State of California or its officers or agents shall not be responsible for the accuracy or completeness of electronic copies of this plan sheet.

To accompany plans dated 1-30-12

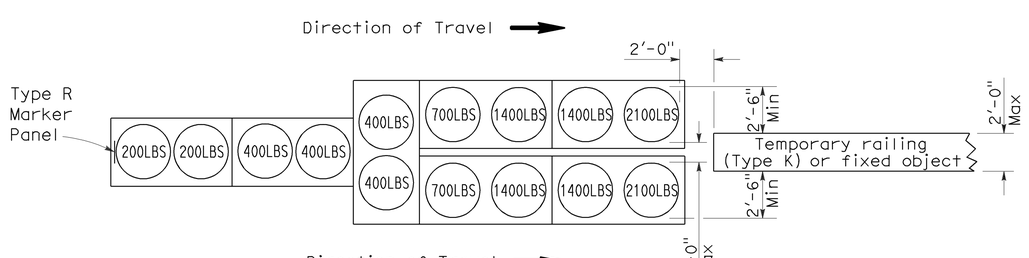

ARRAY 'TU14'

Approach speed 45 mph or more

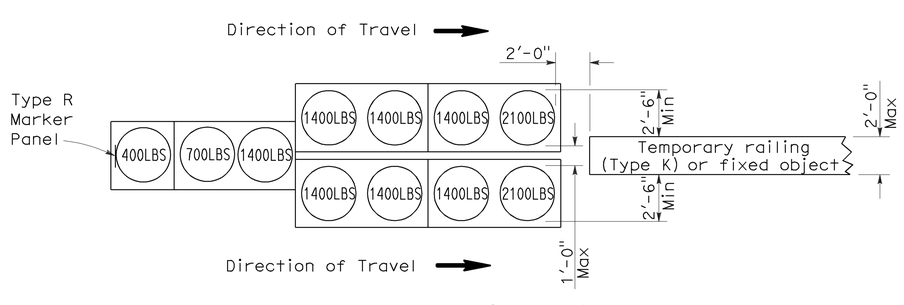

ARRAY 'TU11'

Approach speed less than 45 mph

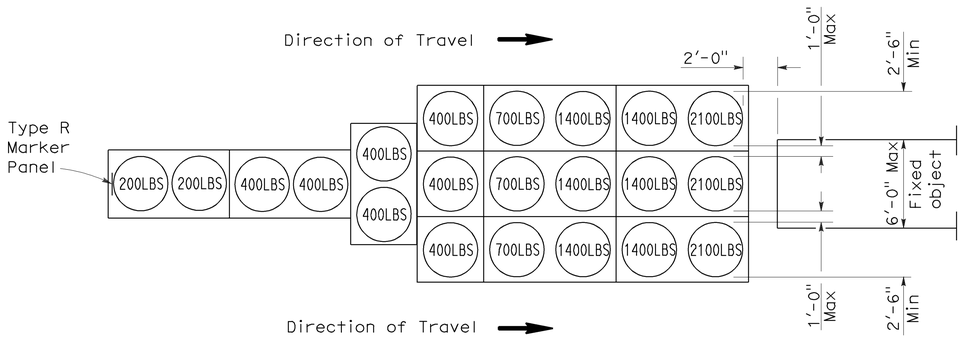

ARRAY 'TU21'

Approach speed 45 mph or more

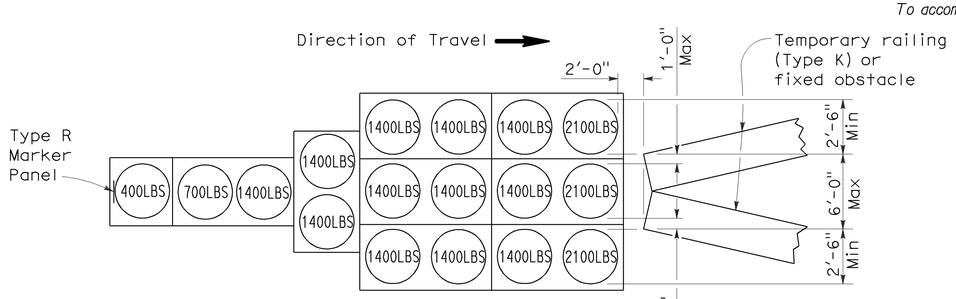

ARRAY 'TU17'

Approach speed less than 45 mph

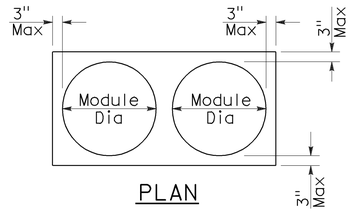

PLAN

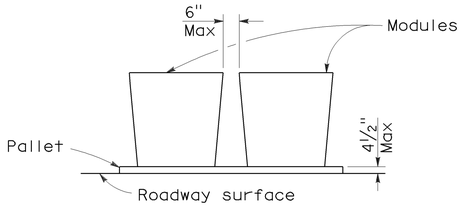

ELEVATION

CRASH CUSHION PALLET DETAIL

See Note 7

NOTES:

1. (XXX) Indicates sand filled module location and weight of sand in pounds for each module. Module spacing is based on the greater diameter of the module.
2. All sand weights are nominal.
3. Temporary crash cushion arrays shall not encroach on the traveled way.
4. Place the top of Type R marker panel 1" below the module lid.
5. Refer to Standard Plan A73B for marker details.
6. Approach speeds indicated conform to NCHRP 350 Report criteria.
7. Use of pallets is optional.

STATE OF CALIFORNIA
DEPARTMENT OF TRANSPORTATION

TEMPORARY CRASH CUSHION, SAND FILLED (UNIDIRECTIONAL)

NO SCALE

RSP T1A DATED JUNE 6, 2008 SUPERSEDES STANDARD PLAN T1A
DATED MAY 1, 2006 - PAGE 211 OF THE STANDARD PLANS BOOK DATED MAY 2006.

REVISED STANDARD PLAN RSP T1A

2006 REVISED STANDARD PLAN RSP T1A

5-15-08

DIST	COUNTY	ROUTE	POST MILES TOTAL PROJECT	SHEET NO.	TOTAL SHEETS
05	SB	101	78.4/82.2	38	45

Randell D. Hiatt
REGISTERED CIVIL ENGINEER

June 6, 2008
PLANS APPROVAL DATE

REGISTERED PROFESSIONAL ENGINEER
Randell D. Hiatt
No. C50200
Exp. 6-30-09
CIVIL
STATE OF CALIFORNIA

The State of California or its officers or agents shall not be responsible for the accuracy or completeness of electronic copies of this plan sheet.

To accompany plans dated 1-30-12

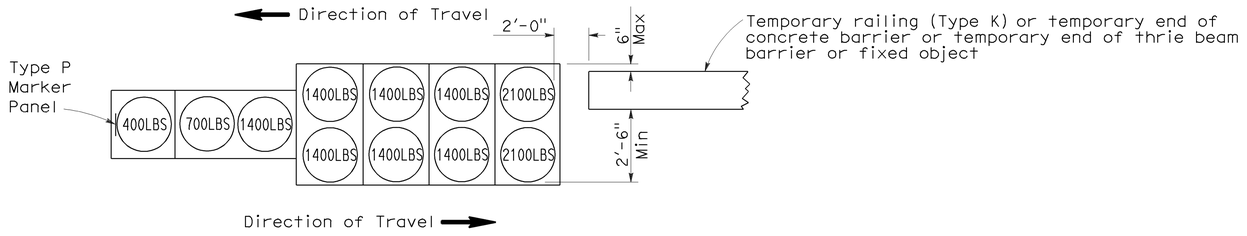

ARRAY 'TB11'

Approach speed less than 45 mph

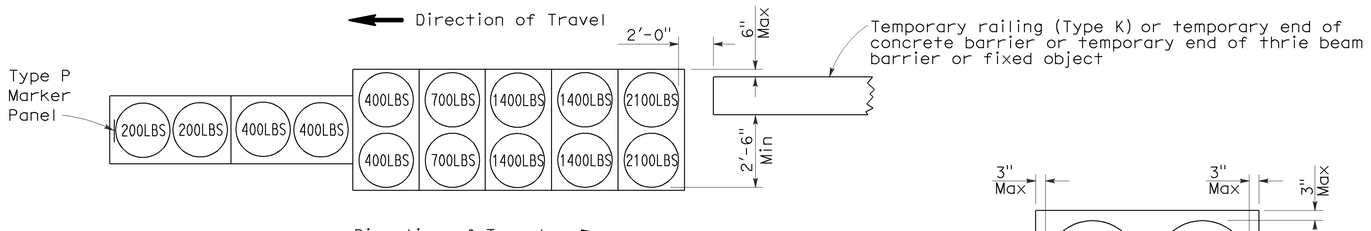

ARRAY 'TB14'

Approach speed 45 mph or more

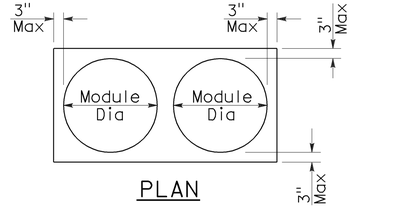

PLAN

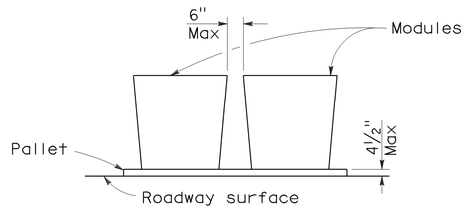

ELEVATION

CRASH CUSHION PALLET DETAIL

See Note 7

NOTES:

1. (XXX) Indicates sand filled module location and weight of sand in pounds for each module. Module spacing is based on the greater diameter of the module.
2. All sand weights are nominal.
3. Temporary crash cushion arrays shall not encroach on the traveled way.
4. Place the Type P marker panel so that the bottom of the panel rests upon the pallet.
5. Refer to Standard Plan A73B for marker details.
6. Approach speeds indicated conform to NCHRP 350 Report criteria.
7. Use of pallets is optional.

STATE OF CALIFORNIA
DEPARTMENT OF TRANSPORTATION

TEMPORARY CRASH CUSHION, SAND FILLED (BIDIRECTIONAL)

NO SCALE

RSP T1B DATED JUNE 6, 2008 SUPERSEDES STANDARD PLAN T1B
DATED MAY 1, 2006 - PAGE 212 OF THE STANDARD PLANS BOOK DATED MAY 2006.

REVISED STANDARD PLAN RSP T1B

2006 REVISED STANDARD PLAN RSP T1B

5-15-08

DIST	COUNTY	ROUTE	POST MILES TOTAL PROJECT	SHEET NO.	TOTAL SHEETS
05	SB	101	78.4/82.2	39	45

Randell D. Hiatt
REGISTERED CIVIL ENGINEER

June 6, 2008
PLANS APPROVAL DATE

REGISTERED PROFESSIONAL ENGINEER
Randell D. Hiatt
No. C50200
Exp. 6-30-09
CIVIL
STATE OF CALIFORNIA

The State of California or its officers or agents shall not be responsible for the accuracy or completeness of electronic copies of this plan sheet.

To accompany plans dated 1-30-12

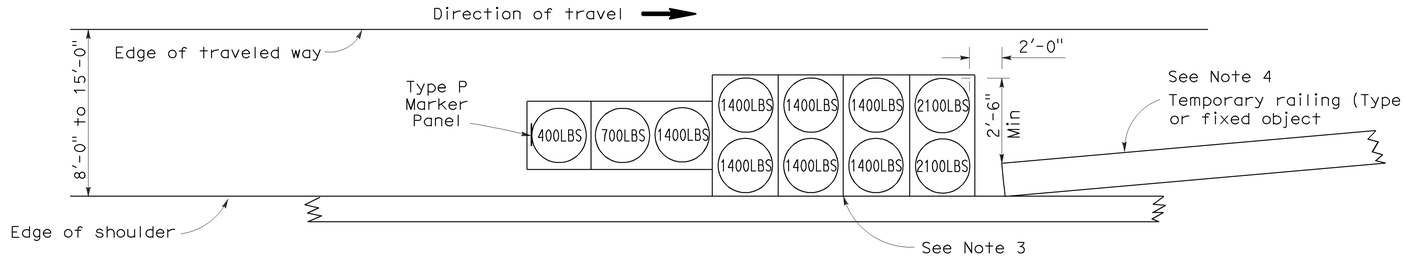

ARRAY 'TS11'

Approach speed less than 45 mph
See Note 9

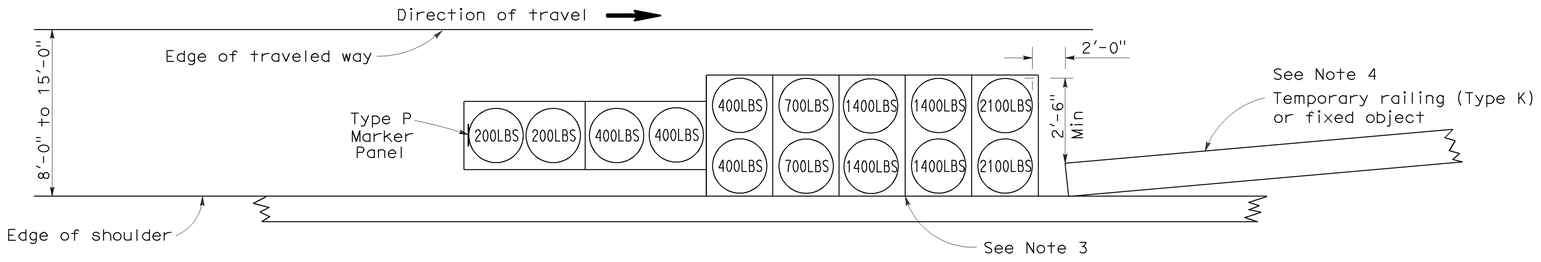

ARRAY 'TS14'

Approach speed 45 mph or more
See Note 9

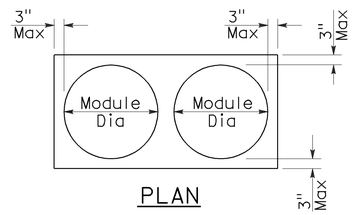

PLAN

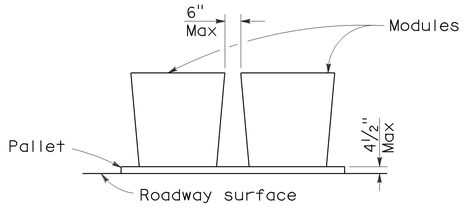

ELEVATION

CRASH CUSHION PALLET DETAIL

See Note 11

NOTES:

1. (XXX) Indicates sand filled module location and weight of sand in pounds for each module. Module spacing is based on the greater diameter of the module.
2. All sand weights are nominal.
3. The temporary crash cushion arrays shown on this plan shall be used only in locations where there will be traffic on one side of the temporary crash cushion array.
4. If the fixed object or approach end of the temporary railing is less than 15'-0" from the edge of traveled way, a temporary crash cushion is required in a construction or work zone.
5. Temporary crash cushion arrays shall not encroach on the traveled way.
6. Arrays for median shoulders shall conform to details shown on this plan for outside shoulders.
7. Place the Type P marker panel so that the bottom of the panel rests upon the pallet and faces traffic.
8. Refer to Standard Plan A73B for marker details.
9. For shoulder widths less than 8'-0", appropriate approved crash cushion protection, other than sand filled modules, shall be provided at fixed objects and at approach ends of temporary railing. The specific type of crash cushion shall be as shown on the project plans or as specified in the Special Provisions, or if not shown on the project plans or specified in the Special Provisions, shall be as approved by the Engineer.
10. Approach speeds indicated conform to NCHRP 350 Report criteria.
11. Use of pallets is optional.

STATE OF CALIFORNIA
DEPARTMENT OF TRANSPORTATION

TEMPORARY CRASH CUSHION, SAND FILLED (SHOULDER INSTALLATIONS)

NO SCALE

RSP T2 DATED JUNE 6, 2008 SUPERSEDES STANDARD PLAN T2
DATED MAY 1, 2006 - PAGE 213 OF THE STANDARD PLANS BOOK DATED MAY 2006.

REVISED STANDARD PLAN RSP T2

2006 REVISED STANDARD PLAN RSP T2

5-15-08

Dist	COUNTY	ROUTE	POST MILES TOTAL PROJECT	SHEET No.	TOTAL SHEETS
05	SB	101	78.4/82.2	40	45

Randell D. Hiatt
REGISTERED CIVIL ENGINEER

May 20, 2011
PLANS APPROVAL DATE

REGISTERED PROFESSIONAL ENGINEER
Randell D. Hiatt
No. C50200
Exp. 6-30-11
CIVIL
STATE OF CALIFORNIA

The State of California or its officers or agents shall not be responsible for the accuracy or completeness of electronic copies of this plan sheet.

To accompany plans dated 1-30-12

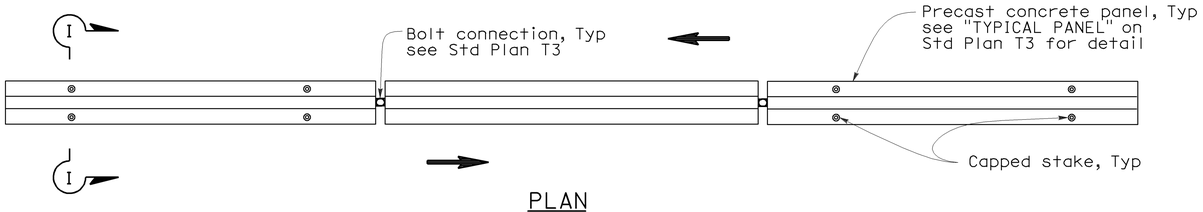

PLAN

RAILING STAKING CONFIGURATION FOR TWO-WAY TRAFFIC

See Note 1

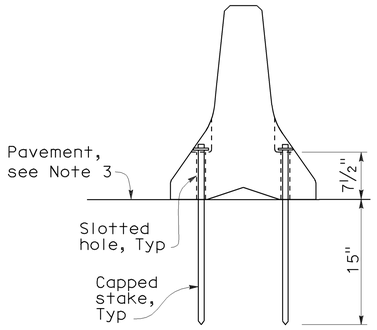

SECTION I-I

NOTES:

1. Where Type K Temporary Railing is placed as a temporary or long term barrier in two-way traffic on highways with less than 24" from the edge of traveled way, use four capped stakes per every other panel with end panels staked.
2. Where Type K Temporary Railing is placed 3" to 24" from the edge of an excavation on highways, use two capped stakes per panel along the traffic side.
3. Staked Type K Temporary Railing must be supported by at least 4" thick concrete, hot mix asphalt or existing asphalt concrete pavement.
4. The minimum yield strength for the washer must be 60,000 psi.
5. Direction of adjacent traffic indicated by ⟹.

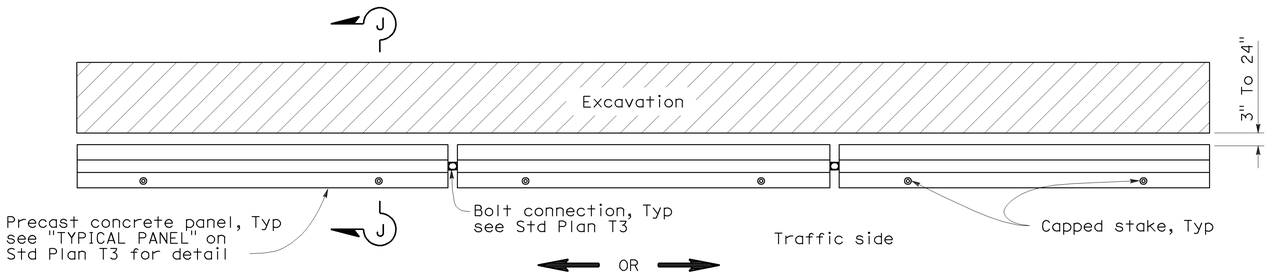

PLAN

RAILING STAKING CONFIGURATION ADJACENT TO AN EXCAVATION

See Note 2

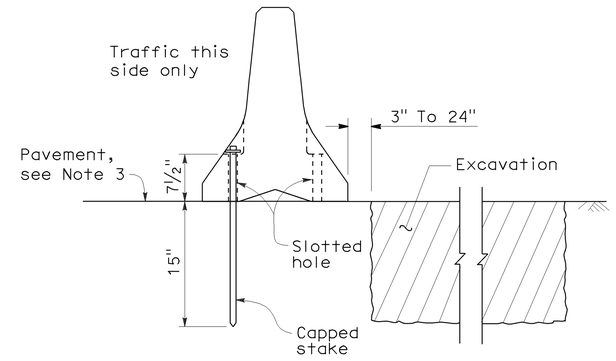

SECTION J-J

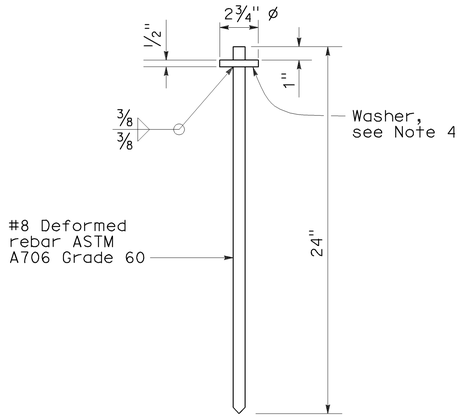

CAPPED STAKE DETAIL

STATE OF CALIFORNIA
DEPARTMENT OF TRANSPORTATION

TEMPORARY RAILING (TYPE K)

NO SCALE

NSP T3A DATED MAY 20, 2011 SUPPLEMENTS
THE STANDARD PLANS BOOK DATED MAY 2006.

NEW STANDARD PLAN NSP T3A

2006 NEW STANDARD PLAN NSP T3A

8-31-10

DIST	COUNTY	ROUTE	POST MILES TOTAL PROJECT	SHEET NO.	TOTAL SHEETS
05	SB	101	78.4/82.2	41	45

Greg W. Edwards
REGISTERED CIVIL ENGINEER

November 17, 2006
PLANS APPROVAL DATE

REGISTERED PROFESSIONAL ENGINEER — Greg W. Edwards — No. C36386 — Exp. 6-30-08 — CIVIL — STATE OF CALIFORNIA

The State of California or its officers or agents shall not be responsible for the accuracy or completeness of electronic copies of this plan sheet.

To accompany plans dated 1-30-12

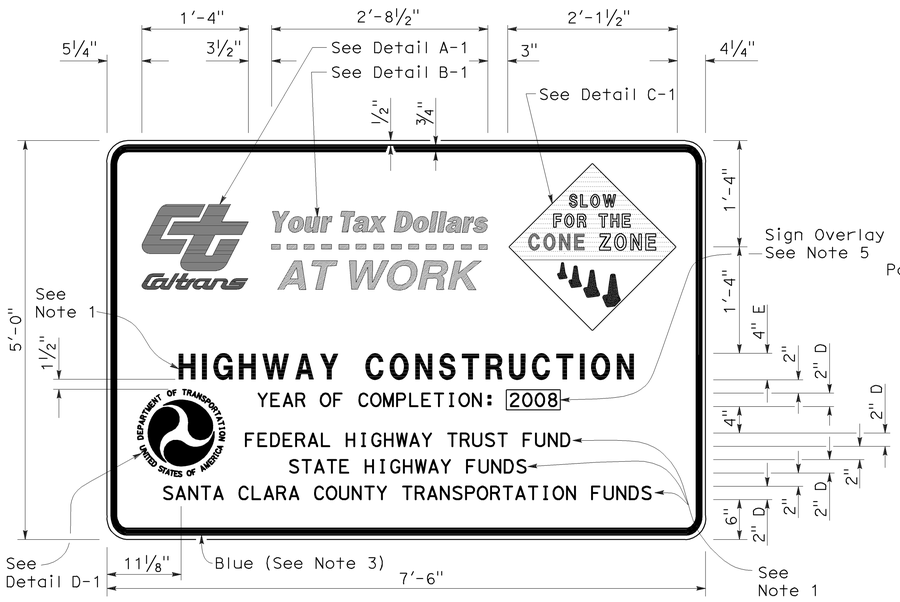

TYPE 1

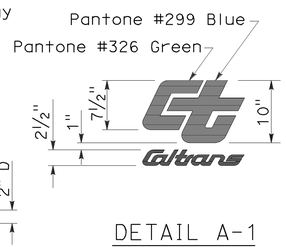

DETAIL A-1

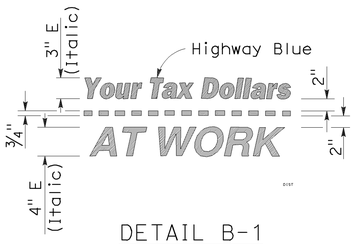

DETAIL B-1
(See Note 3)

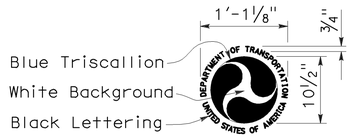

DETAIL D-1
(See Note 6)

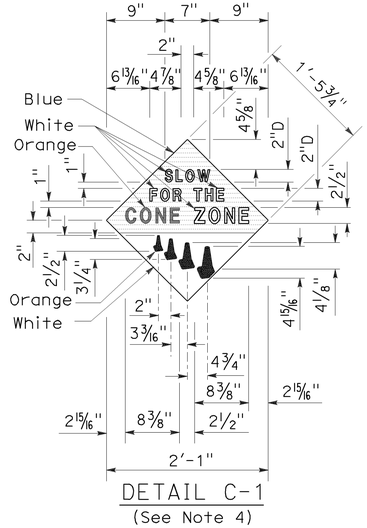

DETAIL C-1
(See Note 4)

NOTES:

1. The sign messages shown for type of project and fund types are examples only. See the Special Provisions for the applicable type of project and fund type messages to be used.
2. Except as otherwise shown, the legend of sign shall be black on a white background (non-reflective).
3. The border of the signs and details "B-1" and "B-2" shall be blue (non-reflective).
4. The diamond in details "C-1" and "C-2" shall be blue for the background of message, " SLOW FOR THE CONE ZONE", and white background for the orange cones. The color and type of font for the "SLOW FOR THE CONE ZONE" message shall be: "SLOW" white D; "FOR THE" white D; "CONE" orange Arial font; "ZONE" white Arial font.
5. Year of completion of project construction shown on the overlay is an example only. See the Special Provisions.
6. Use when the Project involves Federal Highway Trust Fund.

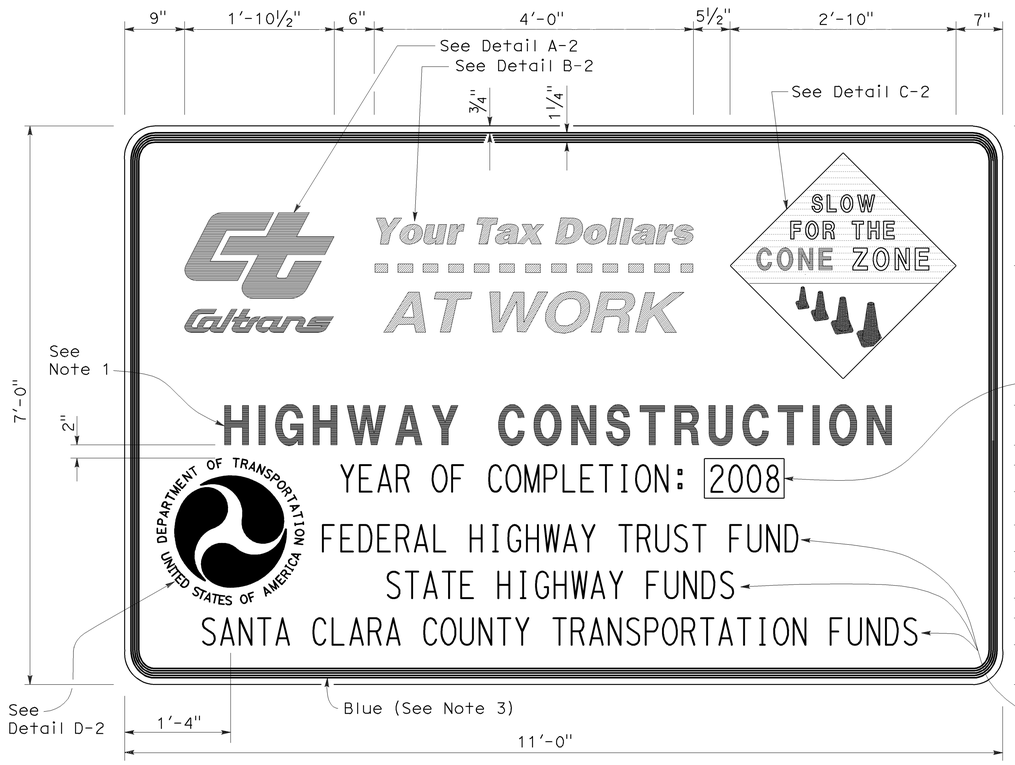

TYPE 2

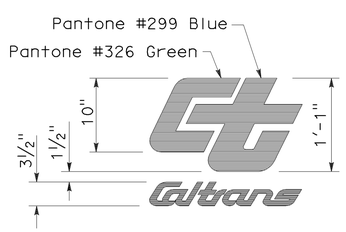

DETAIL A-2

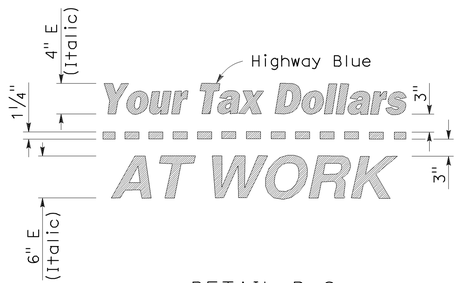

DETAIL B-2
(See Note 3)

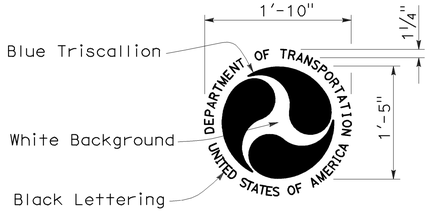

DETAIL D-2
(See Note 6)

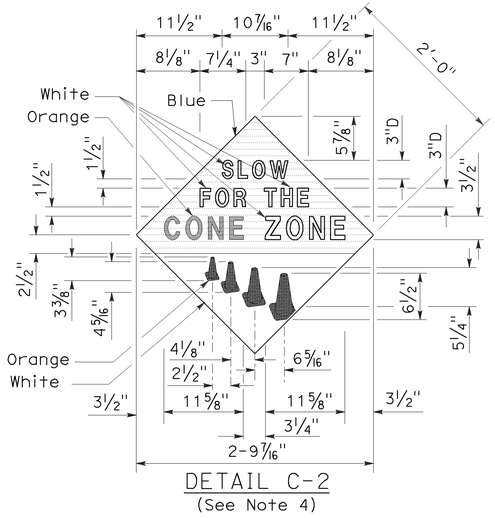

DETAIL C-2
(See Note 4)

STATE OF CALIFORNIA
DEPARTMENT OF TRANSPORTATION

CONSTRUCTION PROJECT FUNDING IDENTIFICATION SIGNS

NO SCALE

RSP T7 DATED NOVEMBER 17, 2006 SUPERSEDES STANDARD PLAN T7
DATED MAY 1, 2006 - PAGE 217 OF THE STANDARD PLANS BOOK DATED MAY 2006.

REVISED STANDARD PLAN RSP T7

2006 REVISED STANDARD PLAN RSP T7

9-7-06

DIST	COUNTY	ROUTE	POST MILES TOTAL PROJECT	SHEET NO.	TOTAL SHEETS
05	SB	101	78.4/82.2	42	45

Robert B Schott
LICENSED LANDSCAPE ARCHITECT

August 15, 2008
PLANS Approval DATE

The State of California or its officers or agents shall not be responsible for the accuracy or completeness of electronic copies of this plan sheet.

LICENSED LANDSCAPE ARCHITECT
Robert B. Schott 3695
Signature
11-04-08
Renewal Date
08-11-08
Date
STATE OF CALIFORNIA

To accompany plans dated 1-30-12

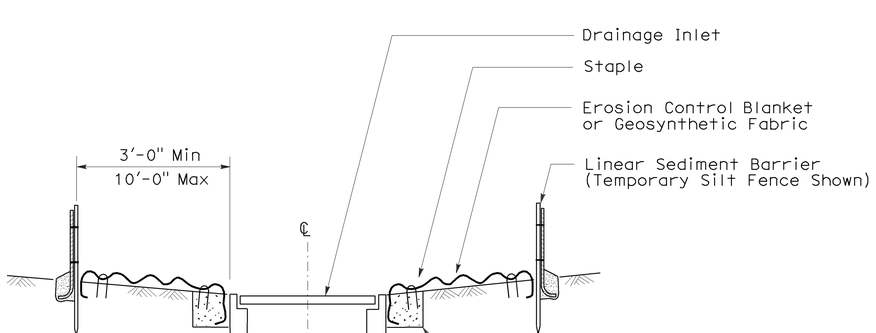

SECTION A-A

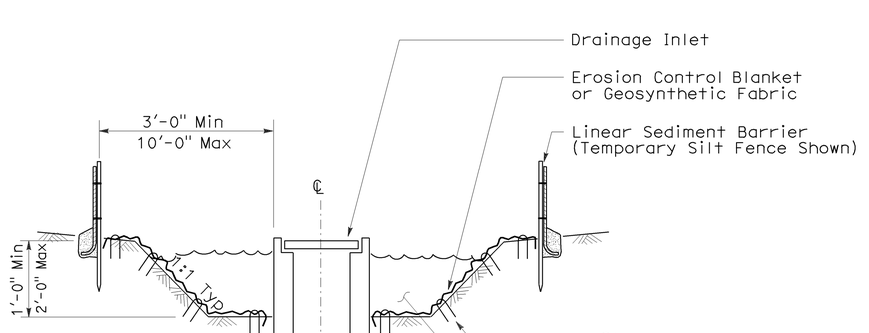

SECTION B-B

NOTES:

1. See Standard Plan T51 for Temporary Silt Fence.
2. Dimensions may vary to fit field conditions.

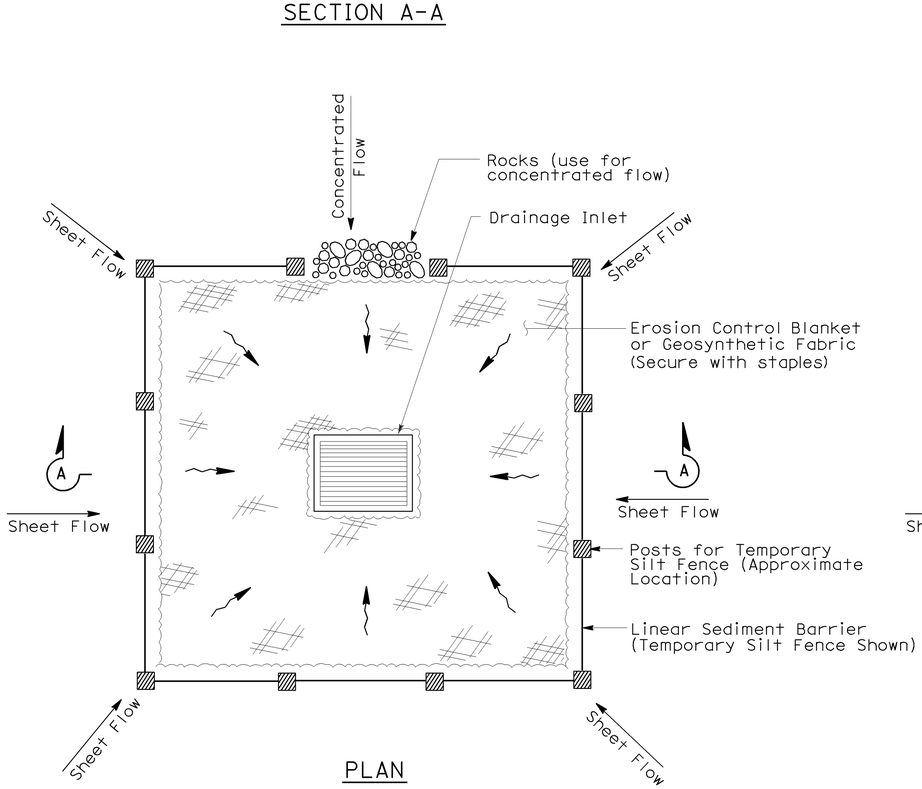

PLAN

TEMPORARY DRAINAGE INLET PROTECTION (TYPE 1)

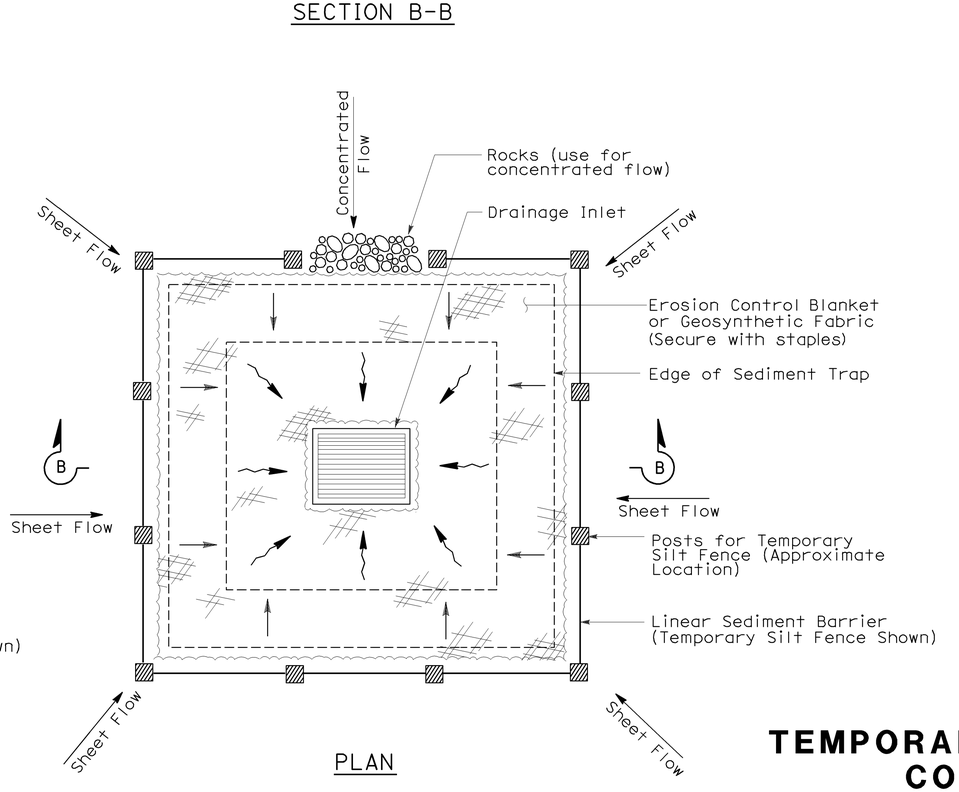

PLAN

TEMPORARY DRAINAGE INLET PROTECTION (TYPE 2) (EXCAVATED SEDIMENT TRAP)

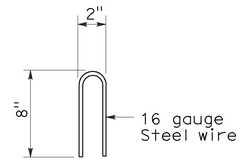

STAPLE DETAIL

STATE OF CALIFORNIA
DEPARTMENT OF TRANSPORTATION

TEMPORARY WATER POLLUTION CONTROL DETAILS (TEMPORARY DRAINAGE INLET PROTECTION)

NO SCALE

Nsp t61 dated august 15, 2008 supplements the standard plans book dated may 2006.

NEW STANDARD PLAN NSP T61

2006 NEW STANDARD PLAN NSP T61

7-11-08

DIST	COUNTY	ROUTE	POST MILES TOTAL PROJECT	SHEET NO.	TOTAL SHEETS
05	SB	101	78.4/82.2	43	45

Robert B Schott
LICENSED LANDSCAPE ARCHITECT

August 15, 2008
PLANS APPROVAL DATE

LICENSED LANDSCAPE ARCHITECT Robert B. Schott 3695 Signature 11-04-08 Renewal Date 08-11-08 Date STATE OF CALIFORNIA

The State of California or its officers or agents shall not be responsible for the accuracy or completeness of electronic copies of this plan sheet.

To accompany plans dated 1-30-12

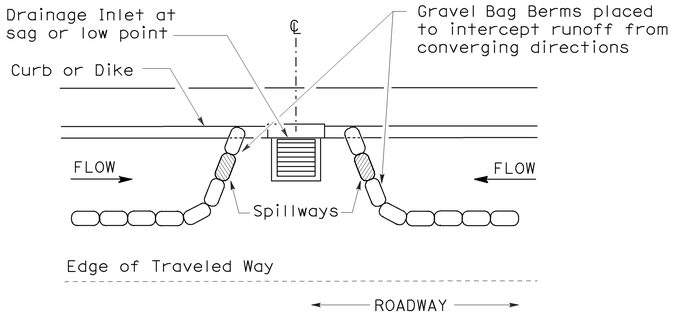

PLAN

CONFIGURATION FOR SAG POINT INLET (GRAVEL BAG BERM)

GRAVEL BAG BERM (TYPE 3A) SPACING TABLE

SLOPE OF ROADWAY (PERCENT)	1 to 3.9	4 to 5.9	6 to 7.9	8 to 10	10+
INTERVAL BETWEEN BERM	100′	75′	50′	25′	12′

For slope of less than 1%, install barriers only if erosion/sediment is prevalent

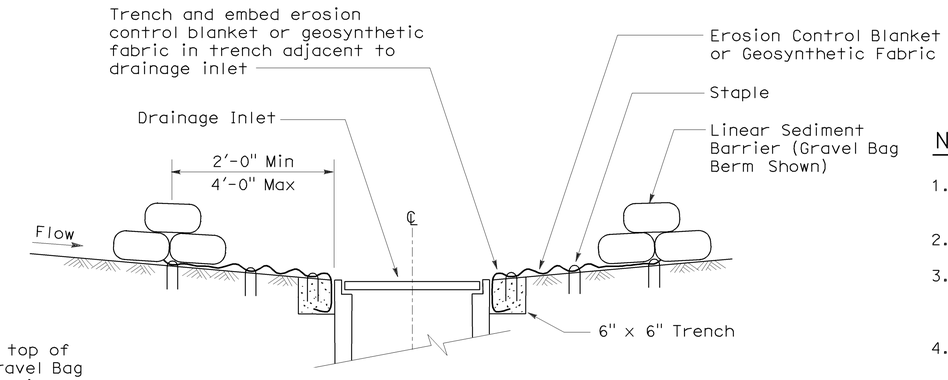

SECTION A-A

NOTES:

1. Place safety cones adjacent to drainage inlet protection.
2. Dimensions may vary to fit field conditions.
3. Install a minimum of 3 gravel bag berms upstream of each drainage inlet to be protected.
4. Position erosion control blanket or geosynthetic fabric at edge of concrete apron and secure in trench.
5. Erosion control blanket or geosynthetic fabric is not required if the area adjacent to the drainage inlet is vegetated or paved.

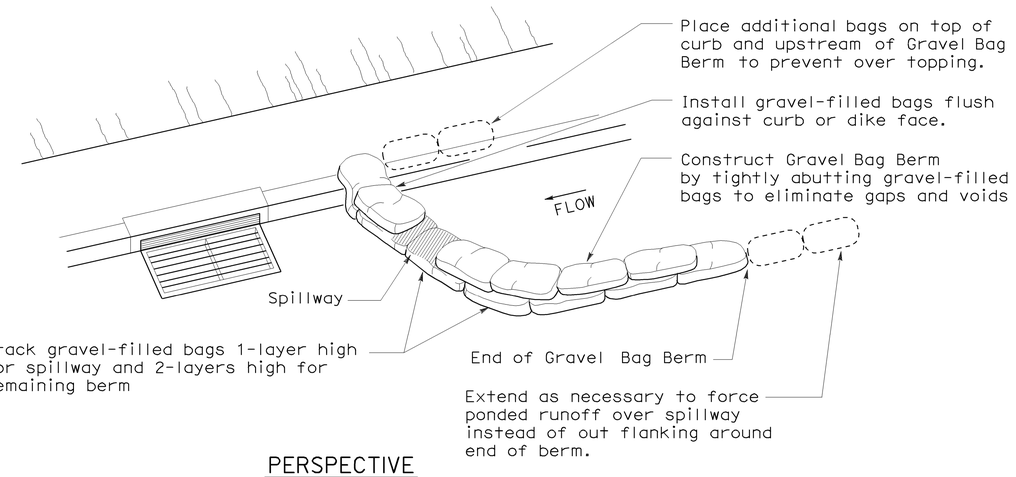

PERSPECTIVE

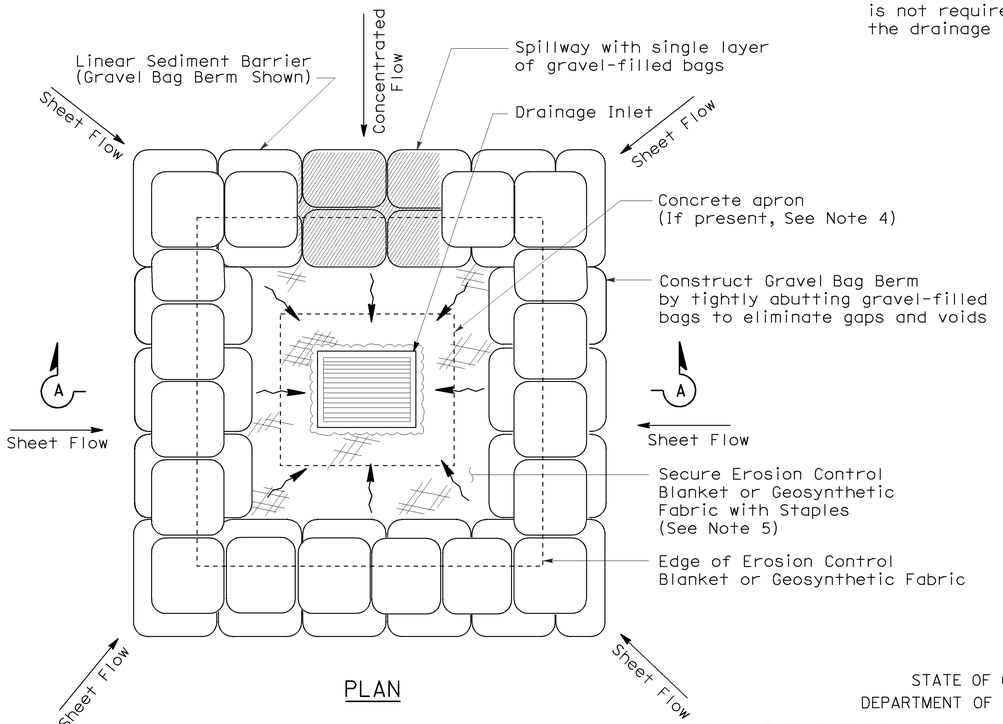

PLAN

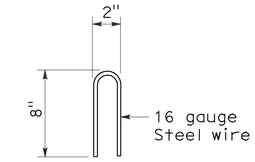

STAPLE DETAIL

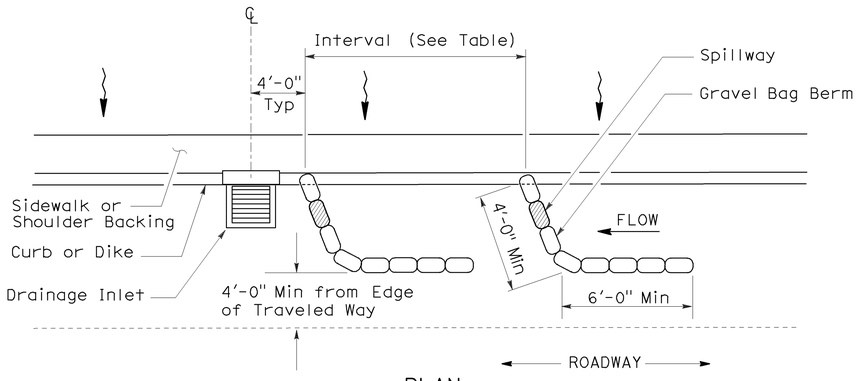

PLAN

TEMPORARY DRAINAGE INLET PROTECTION (TYPE 3A) (GRAVEL BAG BERM)

TEMPORARY DRAINAGE INLET PROTECTION (TYPE 3B)

STATE OF CALIFORNIA
DEPARTMENT OF TRANSPORTATION

TEMPORARY WATER POLLUTION CONTROL DETAILS (TEMPORARY DRAINAGE INLET PROTECTION)

NO SCALE

NSP T62 DATED AUGUST 15, 2008 SUPPLEMENTS
THE STANDARD PLANS BOOK DATED MAY 2006.

NEW STANDARD PLAN NSP T62

2006 NEW STANDARD PLAN NSP T62

7-11-08

FLEXIBLE SEDIMENT BARRIER SPACING TABLE

SLOPE OF ROADWAY (PERCENT)	0 to 0.9	1 to 1.9	2 to 2.9	3 to 4	5+
INTERVAL BETWEEN BARRIERS	50′	35′	30′	25′	20′
ANGLE FROM FACE OF CURB	70°	70°	70°	45°	45°
SUGGESTED BARRIER LENGTH	6′	6′	6′	6′	6′

DIST	COUNTY	ROUTE	POST MILES TOTAL PROJECT	SHEET NO.	TOTAL SHEETS
05	SB	101	78.4/82.2	44	45

Robert B Schott
LICENSED LANDSCAPE ARCHITECT

August 15, 2008
PLANS APPROVAL DATE

LICENSED LANDSCAPE ARCHITECT Robert B. Schott 3835 — Registration Date 11-04-08 — Renewal Date 08-11-08 — Date — STATE OF CALIFORNIA

The State of California or its officers or agents shall not be responsible for the accuracy or completeness of electronic copies of this plan sheet.

To accompany plans dated 1-30-12

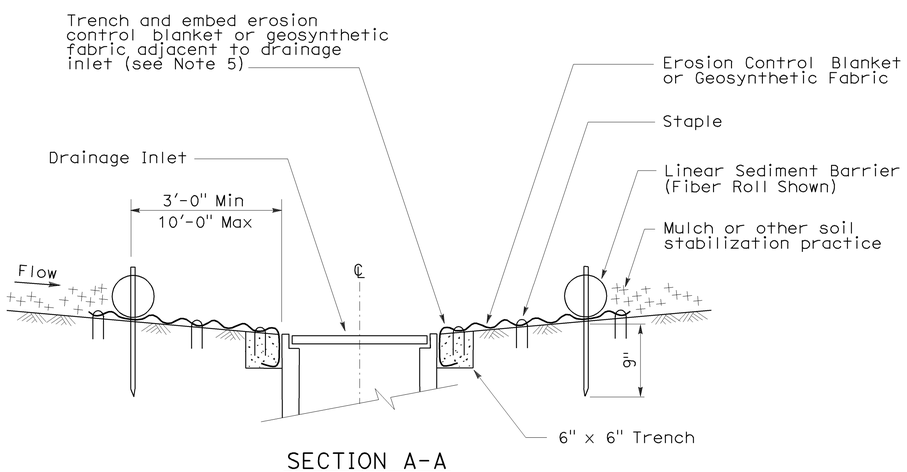

SECTION A-A

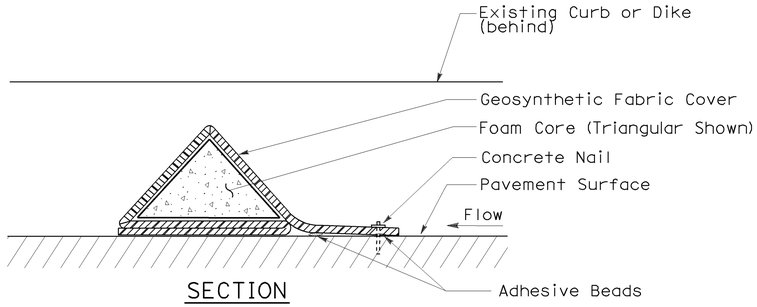

SECTION

FLEXIBLE SEDIMENT BARRIER DETAIL (FOAM BARRIER SHOWN)

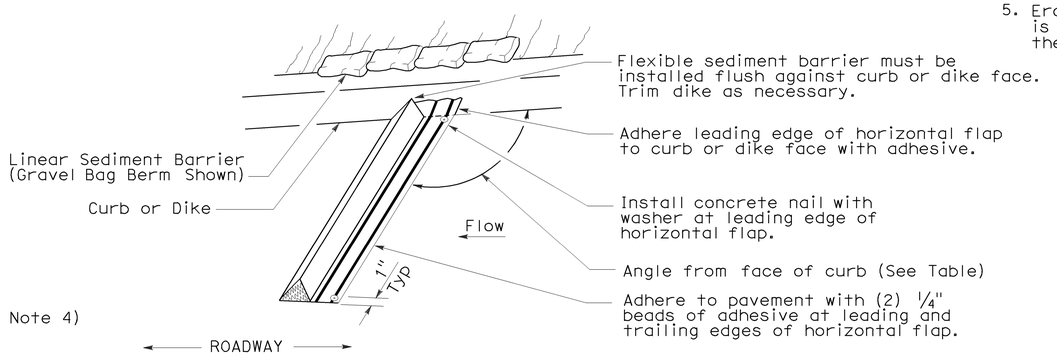

PERSPECTIVE

NOTES:

1. See Standard Plan T51 for Temporary Silt Fence.
2. Dimensions may vary to fit field conditions.
3. Install a minimum of 3 flexible sediment barriers upstream of each drainage inlet to be protected.
4. Position erosion control blanket or geosynthetic fabric at edge of concrete apron and secure in trench.
5. Erosion control blanket or geosynthetic fabric is not required if the area adjacent to the drainage inlet is vegetated.

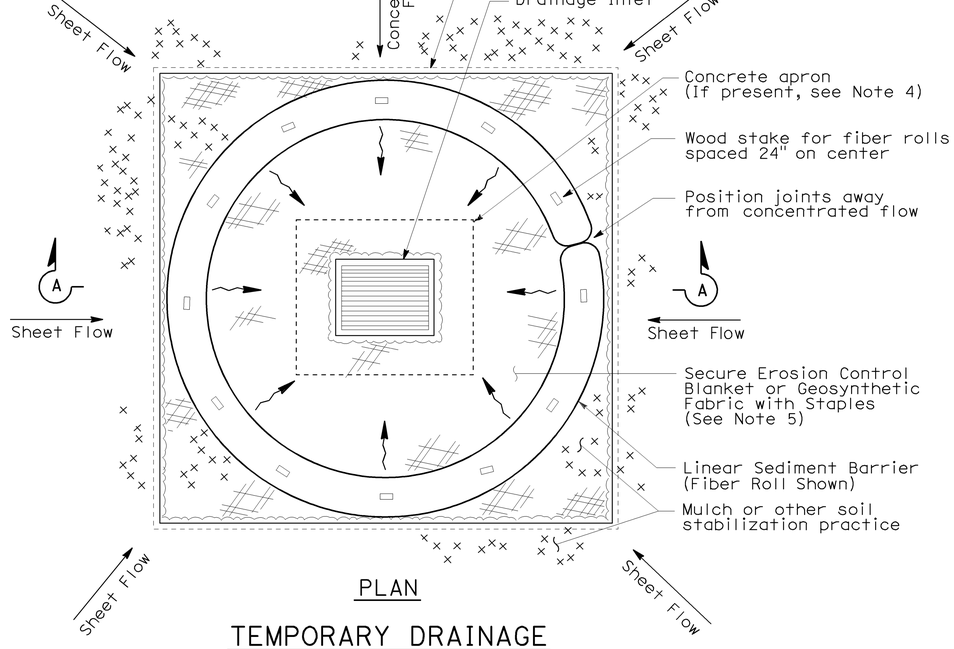

PLAN

TEMPORARY DRAINAGE INLET PROTECTION (TYPE 4A)

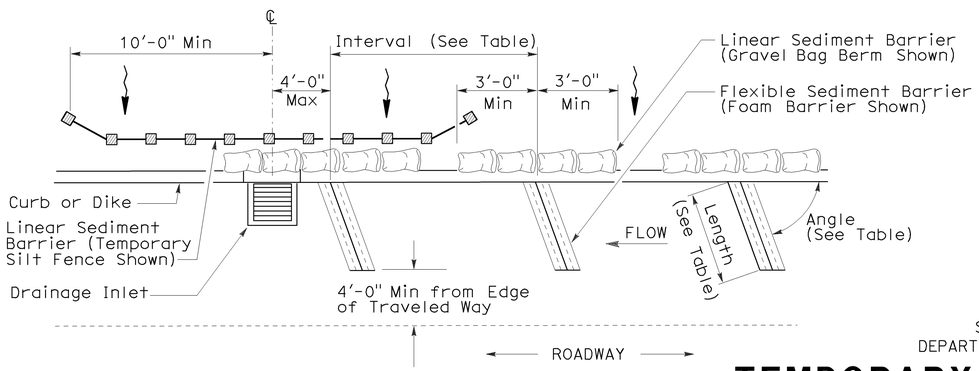

PLAN

TEMPORARY DRAINAGE INLET PROTECTION (TYPE 4B) FLEXIBLE SEDIMENT BARRIER

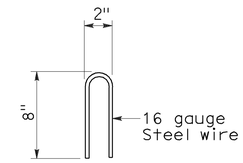

STAPLE DETAIL

STATE OF CALIFORNIA
DEPARTMENT OF TRANSPORTATION

TEMPORARY WATER POLLUTION CONTROL DETAILS (TEMPORARY DRAINAGE INLET PROTECTION)

NO SCALE

NSP T63 DATED AUGUST 15, 2008 SUPPLEMENTS THE STANDARD PLANS BOOK DATED MAY 2006.

NEW STANDARD PLAN NSP T63

2006 NEW STANDARD PLAN NSP T63

7-11-08

DIST	COUNTY	ROUTE	POST MILES TOTAL PROJECT	SHEET NO.	TOTAL SHEETS
05	SB	101	78.4/82.2	45	45

Robert B Schott
LICENSED LANDSCAPE ARCHITECT

August 15, 2008
PLANS APPROVAL DATE

LICENSED LANDSCAPE ARCHITECT
Robert B. Schott 3695
Signature
11-04-08
Renewal Date
08-11-08
Date
STATE OF CALIFORNIA

The State of California or its officers or agents shall not be responsible for the accuracy or completeness of electronic copies of this plan sheet.

To accompany plans dated 1-30-12

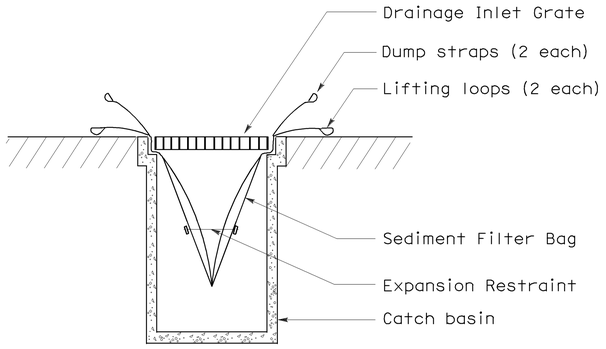

SECTION B-B

SEDIMENT FILTER BAG DETAIL

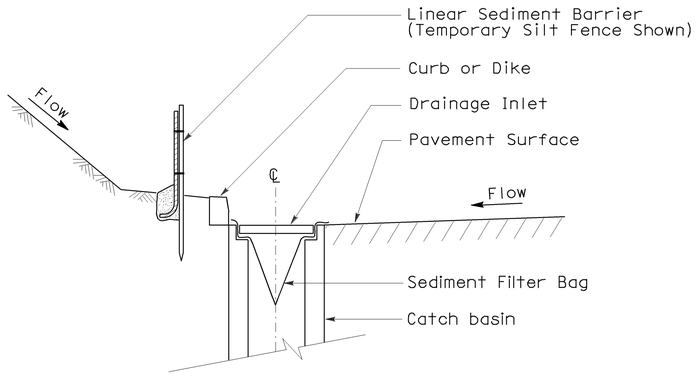

SECTION A-A

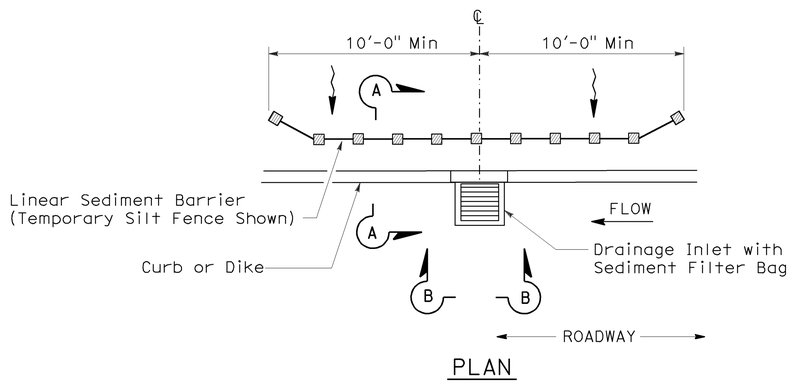

PLAN

TEMPORARY DRAINAGE INLET PROTECTION (TYPE 5) (SEDIMENT FILTER BAG)

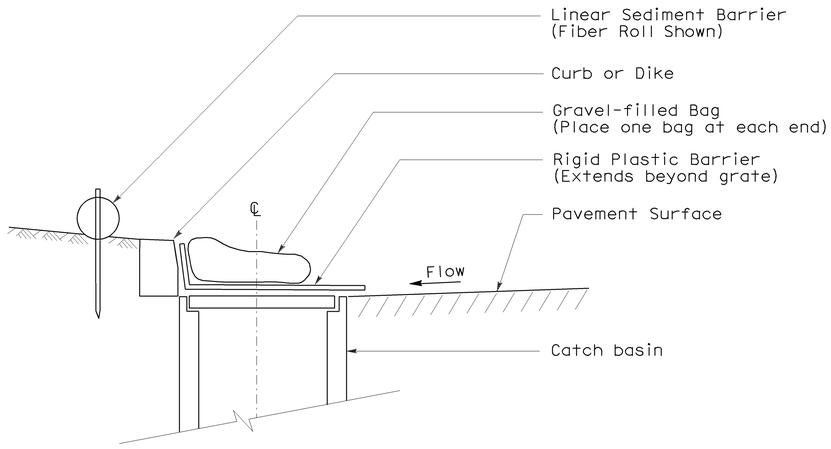

SECTION

TEMPORARY DRAINAGE INLET PROTECTION (TYPE 6A) (CATCH BASIN WITH GRATE)

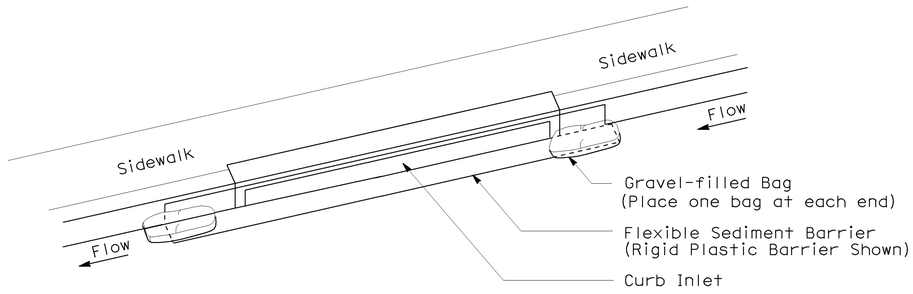

PERSPECTIVE

TEMPORARY DRAINAGE INLET PROTECTION (TYPE 6B) (CURB INLET WITHOUT GRATE)

NOTES:

1. See Standard Plan T51 for Temporary Silt Fence.
2. Dimensions may vary to fit field conditions.

STATE OF CALIFORNIA
DEPARTMENT OF TRANSPORTATION

TEMPORARY WATER POLLUTION CONTROL DETAILS (TEMPORARY DRAINAGE INLET PROTECTION)

NO SCALE

NSP T64 DATED AUGUST 15, 2008 SUPPLEMENTS
THE STANDARD PLANS BOOK DATED MAY 2006.

NEW STANDARD PLAN NSP T64

2006 NEW STANDARD PLAN NSP T64

7-11-08