INDEX OF PLANS

SHEET No.	DESCRIPTION
1	TITLE AND LOCATION MAP
2-3	TYPICAL CROSS SECTIONS
4-5	CONSTRUCTION DETAILS
6	CONSTRUCTION AREA SIGNS
7	PAVEMENT DELINEATION DETAILS
8-9	SUMMARY OF QUANTITIES
10-12	REVISED STANDARD PLANS

THE STANDARD PLANS LIST APPLICABLE TO THIS CONTRACT IS INCLUDED IN THE NOTICE TO BIDDERS AND SPECIAL PROVISIONS BOOK.

STATE OF CALIFORNIA

DEPARTMENT OF TRANSPORTATION

ACNH-Q101(199)E

Dist	COUNTY	ROUTE	POST MILES TOTAL PROJECT	SHEET No.	TOTAL SHEETS
05	SB	101	65.0/84.1	1	12

PROJECT PLANS FOR CONSTRUCTION ON STATE HIGHWAY

IN SANTA BARBARA COUNTY NEAR LOS ALAMOS FROM 2.4 MILES SOUTH OF SAN ANTONIO CREEK BRIDGE TO 0.2 MILE SOUTH OF SANTA MARIA WAY UNDERCROSSING

TO BE SUPPLEMENTED BY STANDARD PLANS DATED MAY 2006

NO SCALE

THE CONTRACTOR SHALL POSSESS THE CLASS (OR CLASSES) OF LICENSE AS SPECIFIED IN THE "NOTICE TO BIDDERS."

PROJECT MANAGER: KELLY J. McCLAIN

DESIGN ENGINEER: KELLY J. McCLAIN

1-31-11
PROJECT ENGINEER — DATE
REGISTERED CIVIL ENGINEER

REGISTERED PROFESSIONAL ENGINEER
MARK CRESSWELL
No. 63117
Exp. 6-30-12
CIVIL
STATE OF CALIFORNIA

January 31, 2011
PLANS APPROVAL DATE

THE STATE OF CALIFORNIA OR ITS OFFICERS OR AGENTS SHALL NOT BE RESPONSIBLE FOR THE ACCURACY OR COMPLETENESS OF SCANNED COPIES OF THIS PLAN SHEET.

CONTRACT No.	05-0T7304
PROJECT ID	0500020042

LAST REVISION 01-31-11
DATE PLOTTED => 28-FEB-2011
TIME PLOTTED => 08:19

Dist	COUNTY	ROUTE	POST MILES TOTAL PROJECT	SHEET No.	TOTAL SHEETS
05	SB	101	65.0/84.1	2	12

1-31-11
REGISTERED CIVIL ENGINEER DATE

MARK CRESSWELL No. 63117 Exp 6-30-12 CIVIL
REGISTERED PROFESSIONAL ENGINEER — STATE OF CALIFORNIA

1-31-11
PLANS APPROVAL DATE

THE STATE OF CALIFORNIA OR ITS OFFICERS OR AGENTS SHALL NOT BE RESPONSIBLE FOR THE ACCURACY OR COMPLETENESS OF SCANNED COPIES OF THIS PLAN SHEET.

NOTES:

1. DIMENSIONS OF THE PAVEMENT STRUCTURES (STRUCTURAL SECTIONS) ARE SUBJECT TO TOLERANCES SPECIFIED IN THE STANDARD SPECIFICATIONS.
2. SUPERELEVATION AS SHOWN OR AS DIRECTED BY THE ENGINEER.
3. HMA SHALL NOT BE PLACED ON PCC STRUCTURES OR SURFACES.
4. ASPHALTIC EMULSION (FOG SEAL COAT) SHALL BE PLACED ON EXISTING AC DIKE AND OVERSIDE DRAINS.
5. EXISTING TRAFFIC STRIPES AND PAVEMENT MARKINGS SHALL BE REMOVED PRIOR TO PLACEMENT OF HMA (TYPE A) OR HMA (OGFC).

ABBREVIATION:

HMA (OGFC) = HOT MIX ASPHALT (OPEN GRADED FRICTION COURSE)

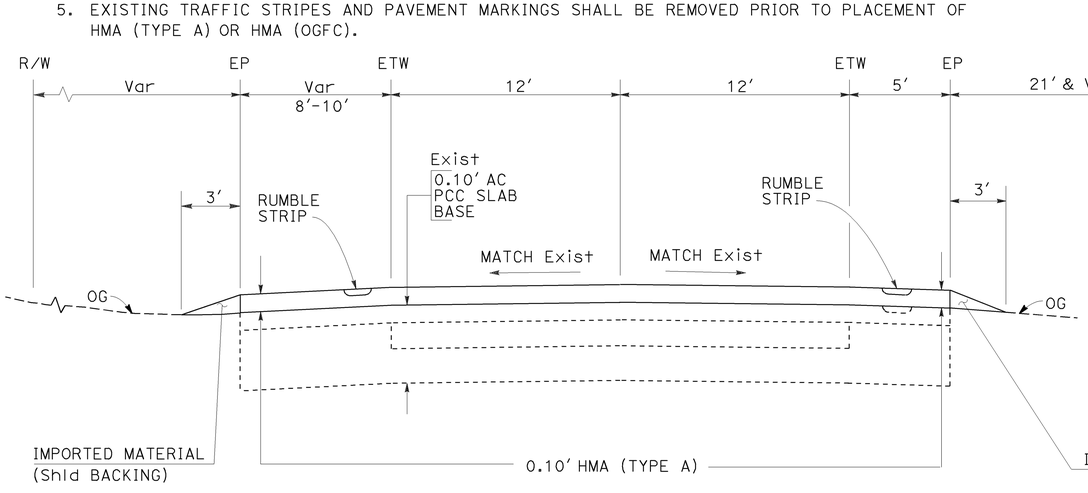

SOUTHBOUND
PM 83.06 / 84.10

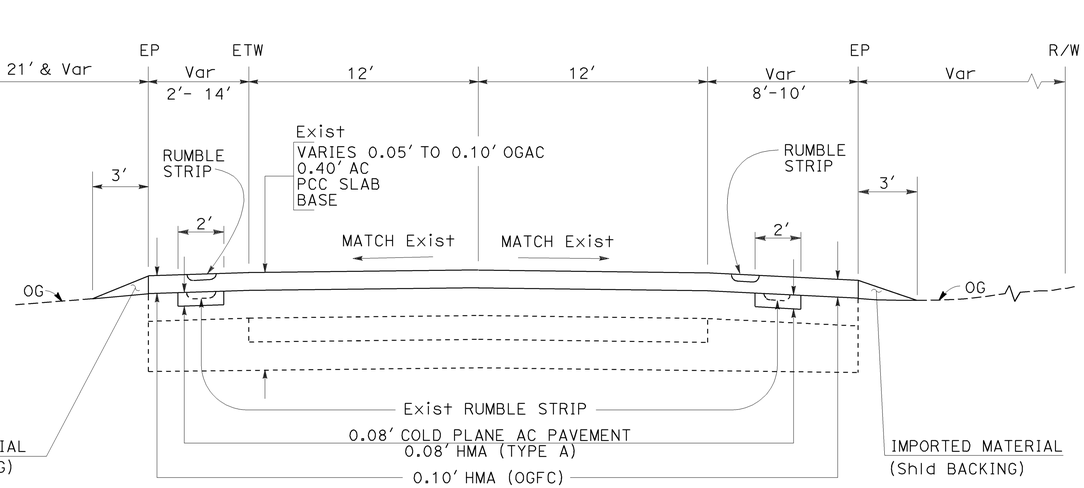

NORTHBOUND
PM 78.81 / 84.10

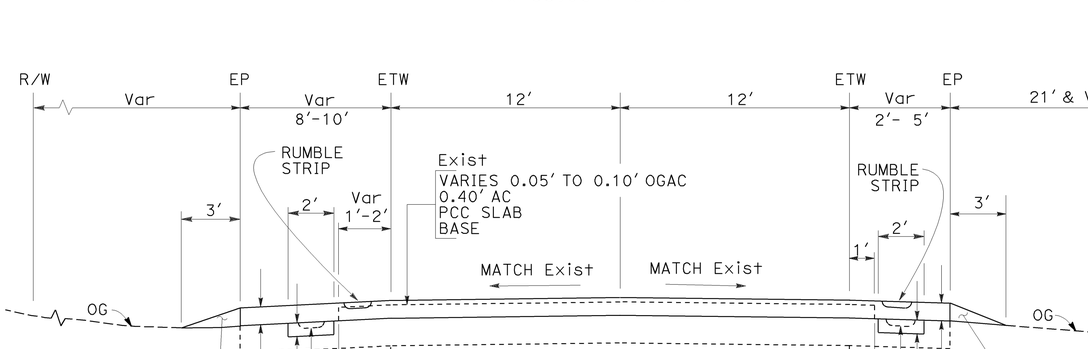

SOUTHBOUND
PM 65.00 / 83.06

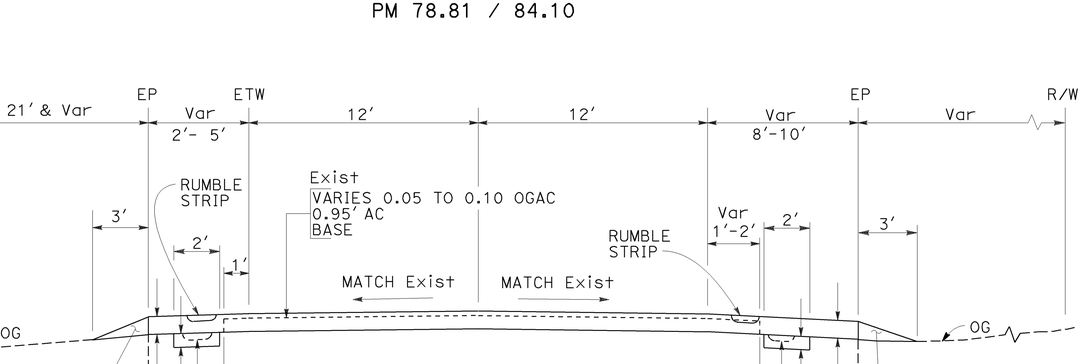

NORTHBOUND
PM 65.00 / 78.81

ROUTE 101

TYPICAL CROSS SECTIONS

NO SCALE

X-1

REVISED BY | DATE REVISED
MARK CRESSWELL | KELLY J. McCLAIN
CALCULATED-DESIGNED BY | CHECKED BY
FUNCTIONAL SUPERVISOR | KELLY J. McCLAIN
STATE OF CALIFORNIA - DEPARTMENT OF TRANSPORTATION
Caltrans® MAINTENANCE DESIGN

LAST REVISION 01-31-11 | DATE PLOTTED => 28-FEB-2011 | TIME PLOTTED => 08:19

Dist	COUNTY	ROUTE	POST MILES TOTAL PROJECT	SHEET No.	TOTAL SHEETS
05	SB	101	65.0/84.1	3	12

Mark E. Cresswell 1-31-11
REGISTERED CIVIL ENGINEER DATE

1-31-11
PLANS APPROVAL DATE

REGISTERED PROFESSIONAL ENGINEER
MARK CRESSWELL
No. 63117
Exp 6-30-12
CIVIL
STATE OF CALIFORNIA

THE STATE OF CALIFORNIA OR ITS OFFICERS OR AGENTS SHALL NOT BE RESPONSIBLE FOR THE ACCURACY OR COMPLETENESS OF SCANNED COPIES OF THIS PLAN SHEET.

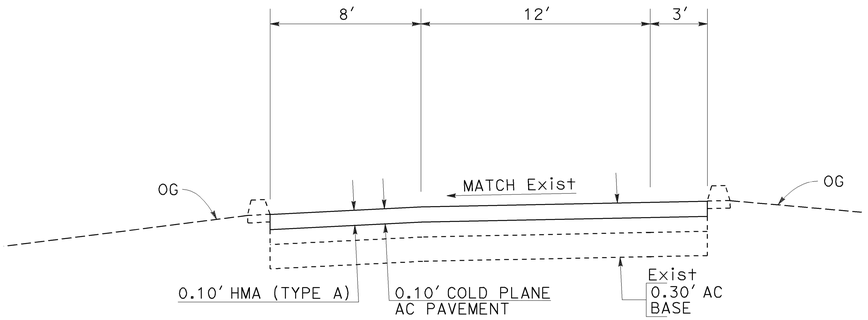

SOUTHBOUND RAMPS

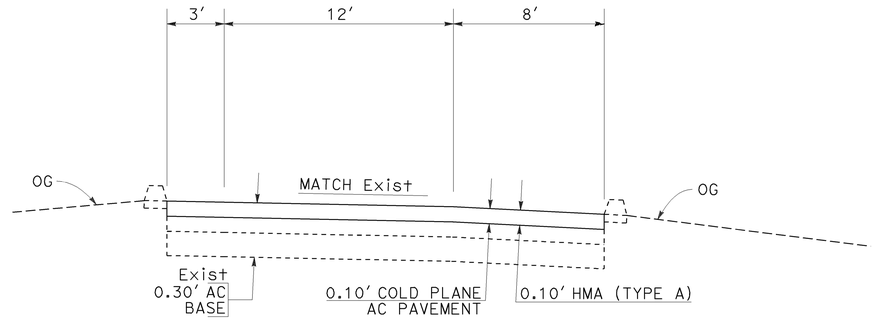

NORTHBOUND RAMPS

ROUTE 101

TYPICAL CROSS SECTIONS

NO SCALE

X-2

CALCULATED-DESIGNED BY: MARK CRESSWELL
CHECKED BY: KELLY J. McCLAIN
FUNCTIONAL SUPERVISOR: KELLY J. McCLAIN
REVISED BY
DATE REVISED
STATE OF CALIFORNIA - DEPARTMENT OF TRANSPORTATION
Caltrans® MAINTENANCE DESIGN

LAST REVISION 01-31-11
DATE PLOTTED => 28-FEB-2011
TIME PLOTTED => 08:19

BORDER LAST REVISED 7/2/2010
USERNAME => s118989
DGN FILE => 0500020042ca002.dgn
RELATIVE BORDER SCALE IS IN INCHES 0 1 2 3
UNIT 1251
PROJECT NUMBER & PHASE 05000200421

Dist	COUNTY	ROUTE	POST MILES TOTAL PROJECT	SHEET No.	TOTAL SHEETS
05	SB	101	65.0/84.1	4	12

REGISTERED CIVIL ENGINEER — 1-31-11 DATE

1-31-11
PLANS APPROVAL DATE

MARK CRESSWELL No. 63117 Exp 6-30-12 CIVIL — REGISTERED PROFESSIONAL ENGINEER — STATE OF CALIFORNIA

THE STATE OF CALIFORNIA OR ITS OFFICERS OR AGENTS SHALL NOT BE RESPONSIBLE FOR THE ACCURACY OR COMPLETENESS OF SCANNED COPIES OF THIS PLAN SHEET.

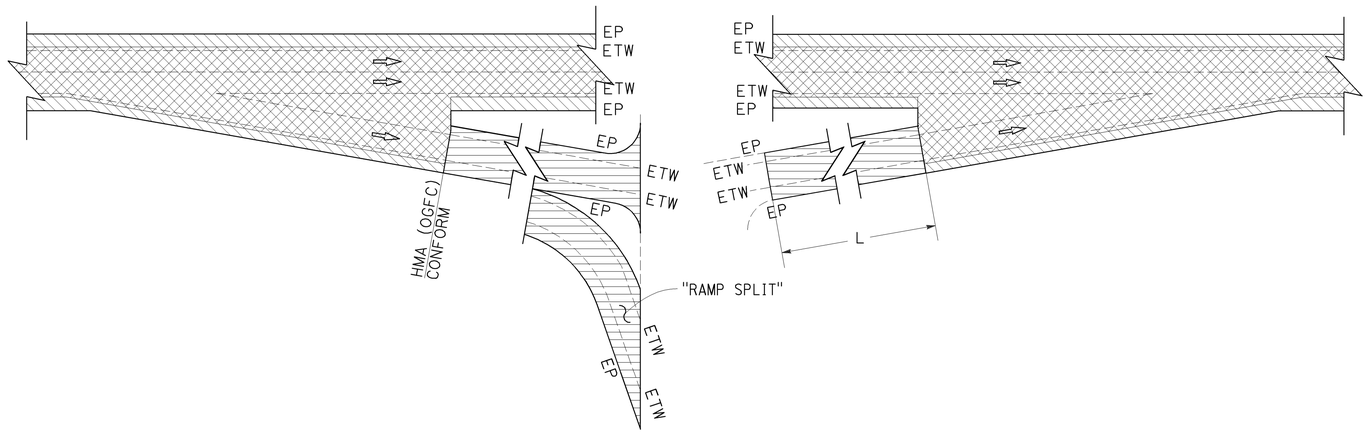

RAMP COLD PLANING AND PAVING DETAILS

ABBREVIATION:

HMA (OGFC) = HOT MIX ASPHALT (OPEN GRADED FRICTION COURSE)

LEGEND:

- COLD PLANE AC PAVEMENT (REMOVE OGAC)
- 0.10′ HMA (OGFC)
- COLD PLANE AC PAVEMENT 0.10′ HOT MIX ASPHALT (TYPE A) 0.10′
- REPLACE AC SURFACING
- DIRECTIONAL ARROW

RAMP LENGTHS "L"

LOCATION (PM)	DESCRIPTION	LENGTH	NOTES
70.71	SB ON-RAMP	730′	
70.75	SB OFF-RAMP	430′	"RAMP SPLIT" LENGTH ADDED
70.98	SB OFF-RAMP	790′	"RAMP SPLIT" LENGTH ADDED
71.15	SB ON-RAMP	250′	
72.80	SB OFF-RAMP	540′	
81.99	SB ON-RAMP	920′	
82.05	SB OFF-RAMP	610′	
82.30	SB OFF-RAMP	590′	
82.35	SB ON-RAMP	880′	

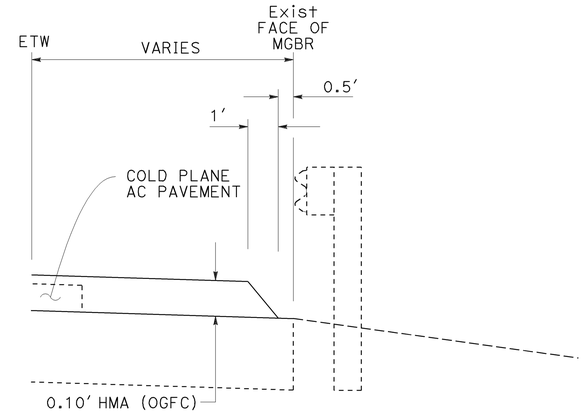

TYPICAL CONFORM AT MBGR

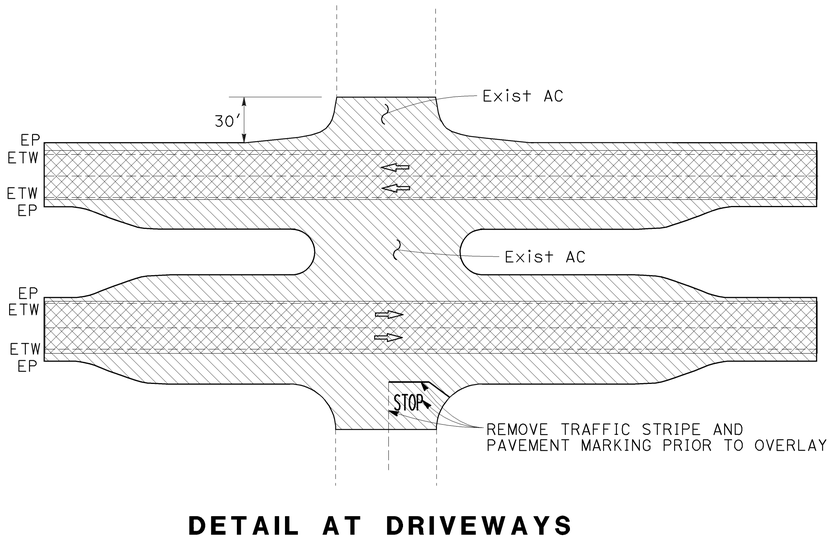

DETAIL AT DRIVEWAYS AND CROSSOVERS

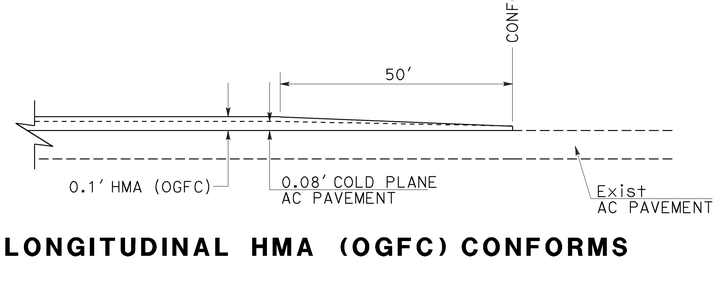

LONGITUDINAL HMA (OGFC) CONFORMS

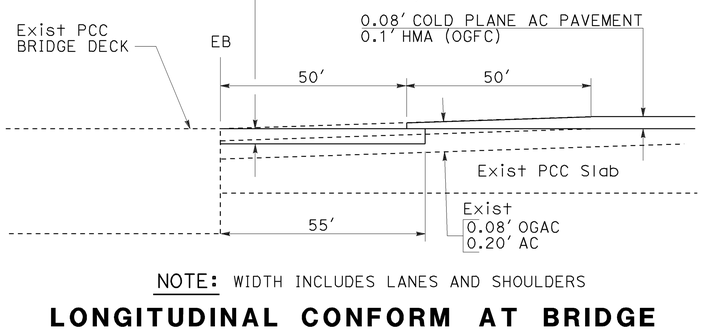

NOTE: WIDTH INCLUDES LANES AND SHOULDERS

LONGITUDINAL CONFORM AT BRIDGE

NB & SB PM 70.90 & 70.93 (ROUTE 101/135 SEPARATION)

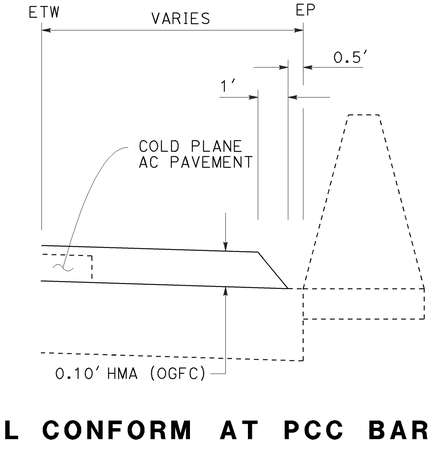

TYPICAL CONFORM AT PCC BARRIER

CONSTRUCTION DETAILS

NO SCALE

C-1

STATE OF CALIFORNIA - DEPARTMENT OF TRANSPORTATION
MAINTENANCE DESIGN
FUNCTIONAL SUPERVISOR: KELLY J. McCLAIN
CALCULATED-DESIGNED BY: MARK CRESSWELL
CHECKED BY: KELLY J. McCLAIN
REVISED BY
DATE REVISED

LAST REVISION DATE PLOTTED => 28-FEB-2011
TIME PLOTTED => 08:19
01-31-11

BORDER LAST REVISED 7/2/2010
USERNAME => s118989
DGN FILE => 0500020042ga001.dgn
RELATIVE BORDER SCALE IS IN INCHES 0 1 2 3
UNIT 1251
PROJECT NUMBER & PHASE 05000200421

Dist	COUNTY	ROUTE	POST MILES TOTAL PROJECT	SHEET No.	TOTAL SHEETS
05	SB	101	65.0/84.1	5	12

Mark E. Cresswell 1-31-11
REGISTERED CIVIL ENGINEER DATE

1-31-11
PLANS APPROVAL DATE

REGISTERED PROFESSIONAL ENGINEER
MARK CRESSWELL
No. 63117
Exp 6-30-12
CIVIL
STATE OF CALIFORNIA

THE STATE OF CALIFORNIA OR ITS OFFICERS OR AGENTS SHALL NOT BE RESPONSIBLE FOR THE ACCURACY OR COMPLETENESS OF SCANNED COPIES OF THIS PLAN SHEET.

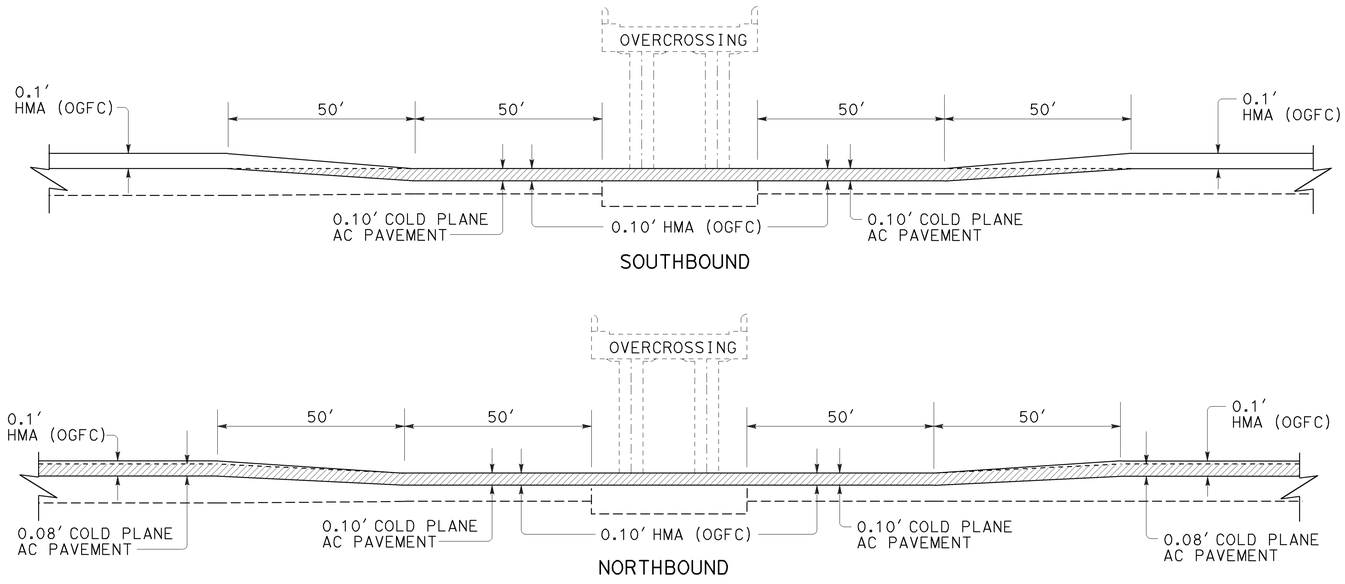

LONGITUDINAL AC CONFORMS AT OVERCROSSING (CLARK AVENUE OC: PM 82.18)

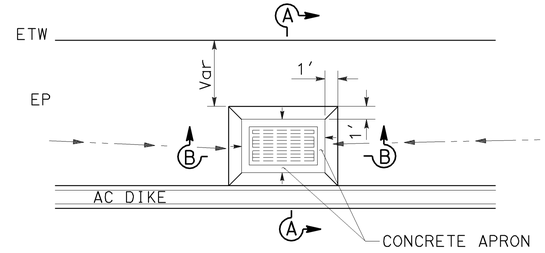

DRAINAGE INLET CONFORM

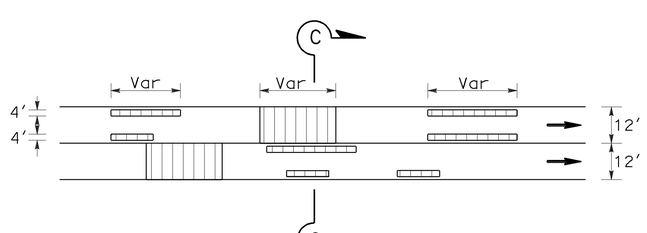

TYPICAL LOCATION PLAN

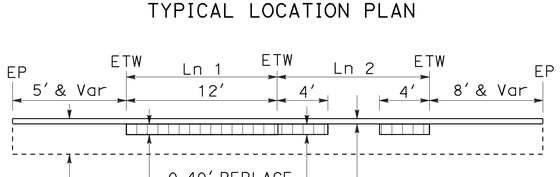

SECTION C-C

REPLACE ASPHALT CONCRETE SURFACING

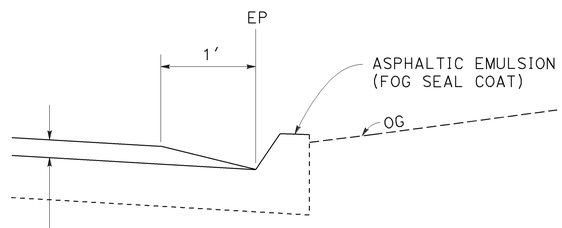

CONFORM AT AC DIKE

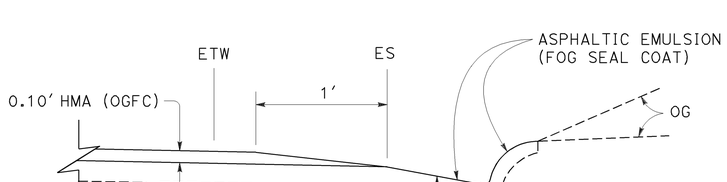

CONFORM AT AC DITCH

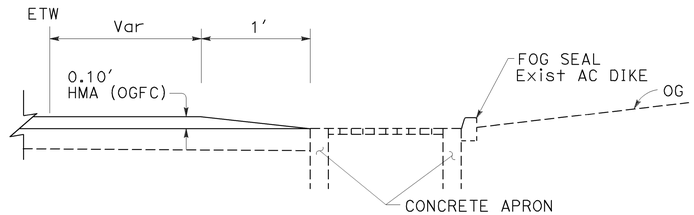

SECTION A-A

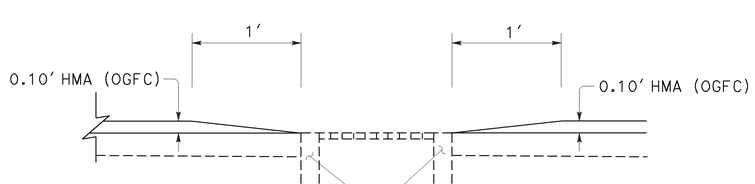

SECTION B-B

CONSTRUCTION DETAILS

NO SCALE

C-2

STATE OF CALIFORNIA - DEPARTMENT OF TRANSPORTATION
MAINTENANCE DESIGN
FUNCTIONAL SUPERVISOR: KELLY J. McCLAIN
CALCULATED-DESIGNED BY: MARK CRESSWELL
CHECKED BY: KELLY J. McCLAIN
REVISED BY
DATE REVISED

LAST REVISION DATE PLOTTED => 28-FEB-2011
01-31-11 TIME PLOTTED => 08:19

Dist	COUNTY	ROUTE	POST MILES TOTAL PROJECT	SHEET No.	TOTAL SHEETS
05	SB	101	65.0/84.1	6	12

Mark E. Cresswell 1-31-11
REGISTERED CIVIL ENGINEER DATE

1-31-11
PLANS APPROVAL DATE

REGISTERED PROFESSIONAL ENGINEER
MARK CRESSWELL
No. 63117
Exp 6-30-12
CIVIL
STATE OF CALIFORNIA

THE STATE OF CALIFORNIA OR ITS OFFICERS OR AGENTS SHALL NOT BE RESPONSIBLE FOR THE ACCURACY OR COMPLETENESS OF SCANNED COPIES OF THIS PLAN SHEET.

STATIONARY MOUNTED CONSTRUCTION AREA SIGNS

SIGN No.	SIGN CODE	SIGN MESSAGE	PANEL SIZE	No. OF POSTS AND SIZE	No. OF SIGNS
A	G20-1	ROAD WORK NEXT 20 MILES	36" x 18"	1- 4" x 4"	2
B	W20-1	ROAD WORK AHEAD	36" x 36"	1- 4" x 6"	17
C	W20-1	ROAD WORK AHEAD	48" x 48"	1- 6" x 6"	4
D	G20-2	END ROAD WORK	36" x 18"	1- 4" x 4"	2
E	SC6-4	RAMP CLOSURE	48" x 60"	1- 6" x 6"	14

NOTE: EXACT SIGN LOCATIONS TO BE DETERMINED BY THE ENGINEER.

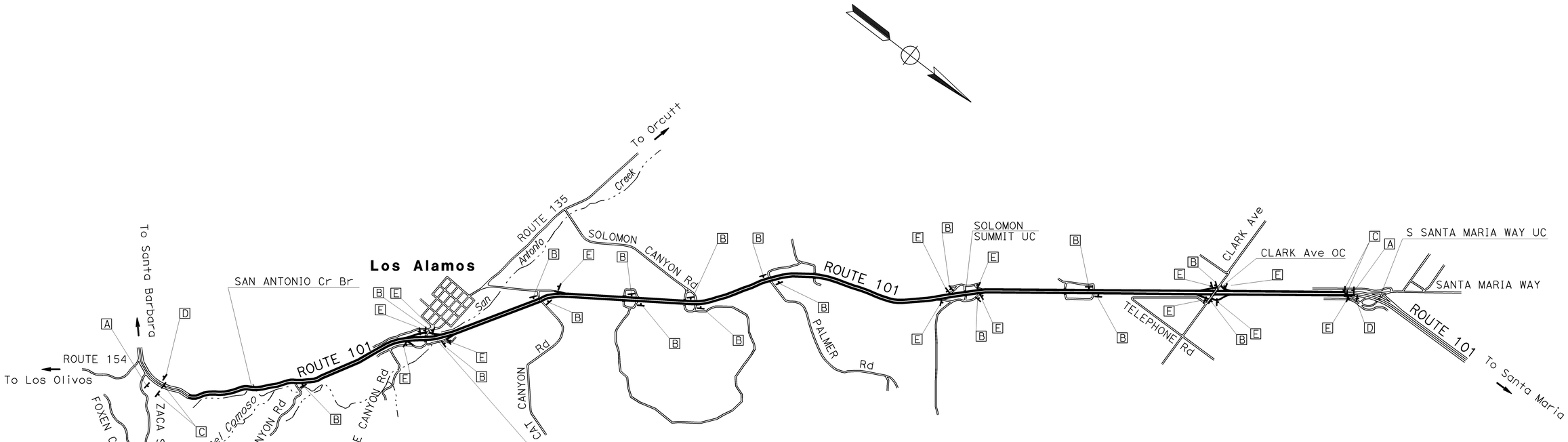

THIS PLAN ACCURATE FOR CONSTRUCTION AREA SIGN WORK ONLY.

CONSTRUCTION AREA SIGNS

NO SCALE **CS-1**

REVISED BY | DATE REVISED
MARK CRESSWELL | KELLY J. McCLAIN
CALCULATED-DESIGNED BY | CHECKED BY
FUNCTIONAL SUPERVISOR: KELLY J. McCLAIN
STATE OF CALIFORNIA - DEPARTMENT OF TRANSPORTATION
Caltrans® MAINTENANCE DESIGN

LAST REVISION | DATE PLOTTED => 28-FEB-2011
01-31-11 | TIME PLOTTED => 08:19

BORDER LAST REVISED 7/2/2010 | USERNAME => s118989 | DGN FILE => 05000200421a001.dgn | RELATIVE BORDER SCALE IS IN INCHES 0 1 2 3 | UNIT 1251 | PROJECT NUMBER & PHASE 05000200421

Dist	COUNTY	ROUTE	POST MILES TOTAL PROJECT	SHEET No.	TOTAL SHEETS
05	SB	101	65.0/84.1	7	12

REGISTERED CIVIL ENGINEER 1-31-11 DATE

1-31-11
PLANS APPROVAL DATE

REGISTERED PROFESSIONAL ENGINEER MARK CRESSWELL No. 63117 Exp. 6-30-12 CIVIL STATE OF CALIFORNIA

THE STATE OF CALIFORNIA OR ITS OFFICERS OR AGENTS SHALL NOT BE RESPONSIBLE FOR THE ACCURACY OR COMPLETENESS OF SCANNED COPIES OF THIS PLAN SHEET.

LEGEND:

→ DIRECTION OF TRAVEL

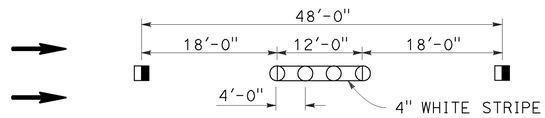

EXISTING
DETAIL 12 AND 13 COMBINED
(12/13)

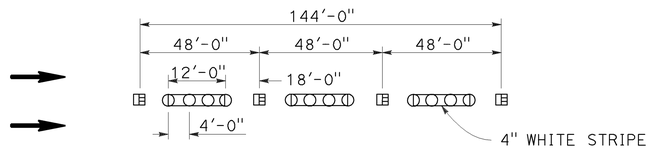

EXISTING
DETAIL 14 AND 14A COMBINED
(14/14A)

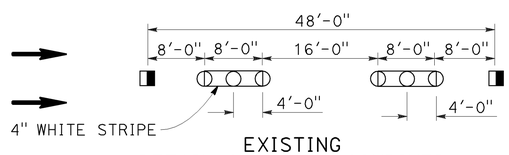

EXISTING
DETAIL 9 AND 10 COMBINED
(9/10)

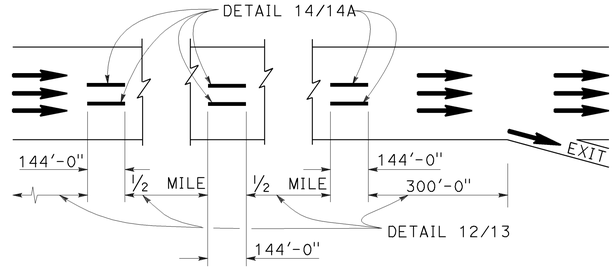

EXISTING
TYPICAL LANE LINE DELINEATION
IN ADVANCE OF EXIT RAMP

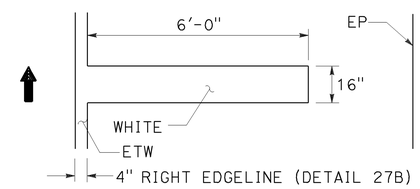

AERIAL PATROL THERMOPLASTIC
PAVEMENT MARKING

VARIOUS LOCATIONS
NORTHBOUND AND SOUTHBOUND

PAVEMENT DELINEATION DETAILS

NO SCALE

PDD-1

STATE OF CALIFORNIA - DEPARTMENT OF TRANSPORTATION
Caltrans® MAINTENANCE DESIGN

FUNCTIONAL SUPERVISOR: KELLY J. McCLAIN
CALCULATED-DESIGNED BY: MARK CRESSWELL
CHECKED BY: KELLY J. McCLAIN
REVISED BY
DATE REVISED

LAST REVISION 01-31-11
DATE PLOTTED => 28-FEB-2011
TIME PLOTTED => 08:19

Dist	COUNTY	ROUTE	POST MILES TOTAL PROJECT	SHEET No.	TOTAL SHEETS
05	SB	101	65.0/84.1	8	12

Mark E. Cresswell 1-31-11
REGISTERED CIVIL ENGINEER DATE

1-31-11
PLANS APPROVAL DATE

REGISTERED PROFESSIONAL ENGINEER
MARK CRESSWELL
No. 63117
Exp 6-30-12
CIVIL
STATE OF CALIFORNIA

THE STATE OF CALIFORNIA OR ITS OFFICERS OR AGENTS SHALL NOT BE RESPONSIBLE FOR THE ACCURACY OR COMPLETENESS OF SCANNED COPIES OF THIS PLAN SHEET.

PAVEMENT DELINEATION

POST MILE LIMITS	DETAIL No. OR PAVEMENT MARKING	REMOVE YELLOW THERMOPLASTIC TRAFFIC STRIPE (HAZARDOUS WASTE)	REMOVE THERMOPLASTIC TRAFFIC STRIPE	REMOVE THERMOPLASTIC PAVEMENT MARKING	PAVEMENT MARKER (NON-REFLECTIVE)	PAVEMENT MARKER (RETROREFLECTIVE)			4" THERMOPLASTIC TRAFFIC STRIPE		4" THERMOPLASTIC TRAFFIC STRIPE (BROKEN 36-12)	4" THERMOPLASTIC TRAFFIC STRIPE (BROKEN 16-8)	4" THERMOPLASTIC TRAFFIC STRIPE (BROKEN 17-7)	8" THERMOPLASTIC TRAFFIC STRIPE	THERMOPLASTIC PAVEMENT MARKING
					TYPE A	TYPE C	TYPE G	TYPE H	YELLOW	WHITE					
		LF	LF	SQFT	EA	EA	EA	EA	LF	LF	LF	LF	LF	LF	SQFT
NB-ROUTE-101 FROM 65.00 TO 84.10	8		147										317		
	9/10				48		9					371			
	12/13 & 14/14A		7,104		8,500	48	2,125				100,870				
	25	27,992						2,124	100,873						
	27B		28,416							103,728					
	36, 36A, 38		2,960				124							2,698	
	AERIAL PATROL			120											120
	TYPE I ARROW														105
	TYPE V ARROW			140											1,295
	STOP BAR			120											150
	"STOP"			90											135
	"AHEAD"														31
SUBTOTAL		27,992	38,627	470	8,548	48	2,258	2,124	100,873	103,728	100,870	371	317	2,698	1,836
SB-ROUTE-101 FROM 65.00 TO 84.05	9/10				84		15					635			
	12/13 & 14/14A		1,332		8,500	48	2,125				100,610				
	25	5,229						2,161	102,380						
	27B		5,229							104,762					
	36, 36A, 38						132							2,805	
	AERIAL PATROL			120											120
	TYPE I ARROW														70
	TYPE III (L) ARROW														252
	TYPE V ARROW														1,400
	STOP BAR			60											135
	"STOP"			45											105
	"AHEAD"														62
SUBTOTAL		5,229	6,561	225	8,584	48	2,272	2,161	102,380	104,762	100,610	635		2,805	2,144
TOTAL		33,221	45,188	695	17,132	8,911			411,743		201,480	1,006	317	5,503	3,980

PAVEMENT DELINEATION QUANTITIES
PDQ-1

CALCULATED-DESIGNED BY
CHECKED BY
MARK CRESSWELL
KELLY J. McCLAIN
REVISED BY
DATE REVISED
FUNCTIONAL SUPERVISOR
KELLY J. McCLAIN
STATE OF CALIFORNIA - DEPARTMENT OF TRANSPORTATION
Caltrans® MAINTENANCE DESIGN

LAST REVISION DATE PLOTTED => 28-FEB-2011
TIME PLOTTED => 08:19
01-31-11

BORDER LAST REVISED 7/2/2010
USERNAME => s118989
DGN FILE => 0500020042nc001.dgn
RELATIVE BORDER SCALE IS IN INCHES 0 1 2 3
UNIT 1251
PROJECT NUMBER & PHASE 05000200421

Dist	COUNTY	ROUTE	POST MILES TOTAL PROJECT	SHEET No.	TOTAL SHEETS
05	SB	101	65.0/84.1	9	12

REGISTERED CIVIL ENGINEER — 1-31-11 DATE

1-31-11
PLANS APPROVAL DATE

MARK CRESSWELL No. 63117 Exp 6-30-12 CIVIL — REGISTERED PROFESSIONAL ENGINEER — STATE OF CALIFORNIA

THE STATE OF CALIFORNIA OR ITS OFFICERS OR AGENTS SHALL NOT BE RESPONSIBLE FOR THE ACCURACY OR COMPLETENESS OF SCANNED COPIES OF THIS PLAN SHEET.

CHANNELIZERS

LOCATION	REMOVE CHANNELIZERS	CHANNELIZER (SURFACE MOUNTED) (LEFT IN PLACE)	DETAILS
	EA	EA	
SB-ROUTE-101 FROM 66.27 TO 66.28	2	2	WHITE POST WHITE RETROREFLECTIVE SHEETING

REPLACE ASPHALT CONCRETE SURFACING

	LOCATION (PM)	REMOVE AC SURFACING (N) LANE 1 WIDTH	REMOVE AC SURFACING (N) LANE 2 WIDTH	REMOVE AC SURFACING (N) AREA	REPLACE AC SURFACING	NOTES
		FT	FT	SQYD	CY	
NORTHBOUND	65.02 TO 65.04	12	12	300	40.0	
	65.50 TO 65.56	12	12	860	114.7	
	66.66 TO 66.81		4	360	48.0	#2 Lt Wheel
	67.38 TO 67.44	12	12	860	114.7	
	67.51 TO 67.54		4	80	10.7	#2 Rt Wheel
	68.76 TO 68.79		12	220	29.3	
	79.16 TO 79.17		4	30	4.0	#2 Lt Wheel
	79.62 TO 79.69		12	500	66.7	
				SUBTOTAL	428.0	
SOUTHBOUND	65.46 TO 65.50	12	12	590	78.7	
	65.50 TO 65.54	12		300	40.0	
	65.59 TO 65.63	12	12	590	78.7	
	65.69 TO 65.72	12		220	29.3	
	65.91 TO 65.93	12		150	20.0	
	65.96 TO 65.99	12	12	430	57.3	
	66.06 TO 66.08		12	150	20.0	
	66.08 TO 66.11	4		80	10.7	#1 Lt Wheel
	67.54 TO 67.58		4	100	13.3	#2 Rt Wheel
	68.27 TO 68.31		4	100	13.3	#2 Rt Wheel
	68.63 TO 68.68		4	120	16.0	#2 Rt Wheel
	68.71 TO 68.74		4	80	10.7	#2 Rt Wheel
				SUBTOTAL	388.0	
				TOTAL	816.0	

(N) - NOT A SEPARATE PAY ITEM. FOR INFORMATION ONLY.

PAVEMENT STRUCTURE

POST MILE LIMITS	COLD PLANE AC PAVEMENT	HOT MIX ASPHALT (TYPE A)	HOT MIX ASPHALT (OPEN GRADED)	TACK COAT	ASPHALTIC EMULSION (FOG SEAL COAT)	IMPORTED MATERIAL (SHOULDER BACKING)	RUMBLE STRIP
	SQYD	TON	TON	TON	TON	TON	STA
NB-ROUTE 101- PM 65.0 TO 84.1	269,139	2,524	27,445	182.4	4.7	3,298	1,738
SB-ROUTE 101- PM 65.0 TO 84.1	333,312	3,768	26,058	175.5	3.1	3,660	1,245
TOTALS	602,451	6,292	53,503	357.9	7.8	6,958	2,983

SUMMARY OF QUANTITIES
Q-1

REVISED BY | DATE REVISED
MARK CRESSWELL | KELLY J. McCLAIN
CALCULATED-DESIGNED BY | CHECKED BY
FUNCTIONAL SUPERVISOR: KELLY J. McCLAIN
STATE OF CALIFORNIA - DEPARTMENT OF TRANSPORTATION
Caltrans® MAINTENANCE DESIGN

LAST REVISION 01-31-11 | DATE PLOTTED => 28-FEB-2011 | TIME PLOTTED => 08:19

BORDER LAST REVISED 7/2/2010 | USERNAME => s118989 | DGN FILE => 0500020042pa001.dgn | RELATIVE BORDER SCALE IS IN INCHES 0 1 2 3 | UNIT 1251 | PROJECT NUMBER & PHASE 05000200421

DIST	COUNTY	ROUTE	POST MILES TOTAL PROJECT	SHEET NO.	TOTAL SHEETS
05	SB	101	65.0/84.1	10	12

Randell D. Hiatt
REGISTERED CIVIL ENGINEER

June 6, 2008
PLANS APPROVAL DATE

REGISTERED PROFESSIONAL ENGINEER
Randell D. Hiatt
No. C50200
Exp. 6-30-09
CIVIL
STATE OF CALIFORNIA

The State of California or its officers or agents shall not be responsible for the accuracy or completeness of electronic copies of this plan sheet.

To accompany plans dated 1-31-11

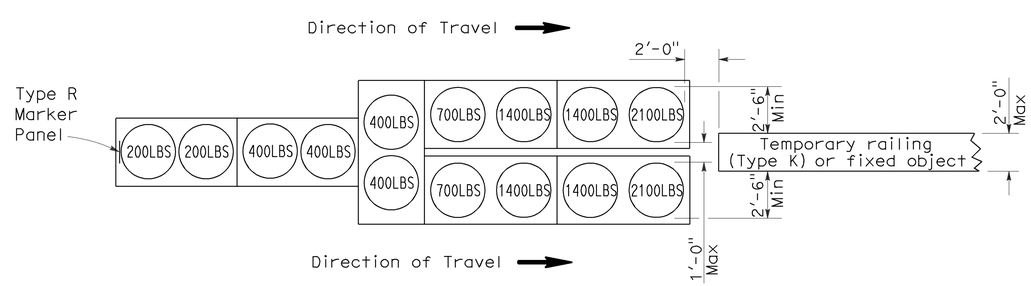

ARRAY 'TU14'

Approach speed 45 mph or more

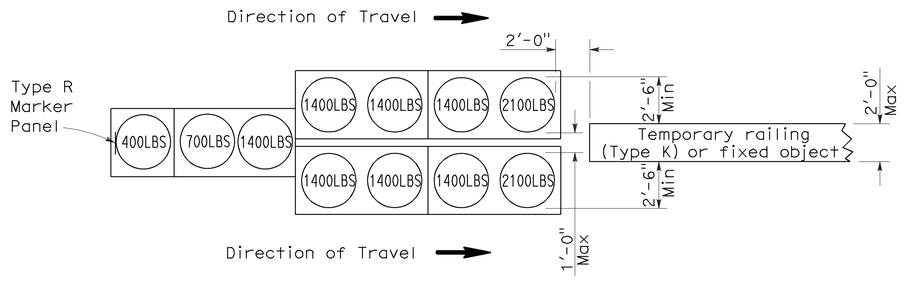

ARRAY 'TU11'

Approach speed less than 45 mph

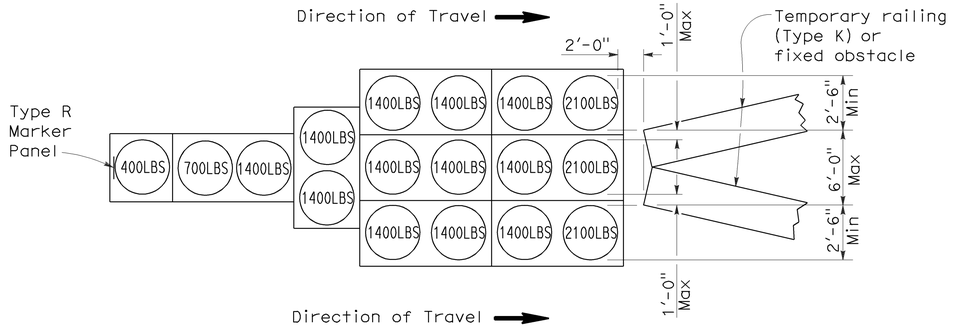

ARRAY 'TU17'

Approach speed less than 45 mph

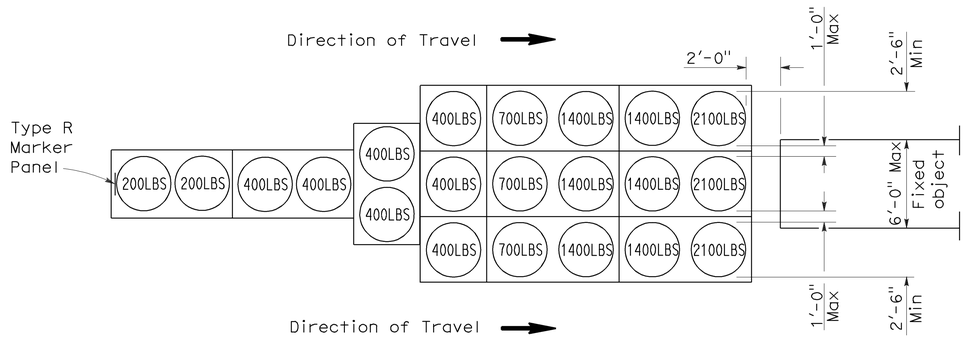

ARRAY 'TU21'

Approach speed 45 mph or more

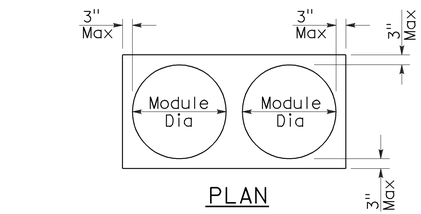

PLAN

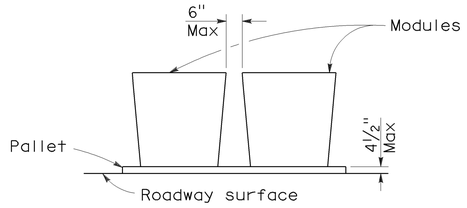

ELEVATION

CRASH CUSHION PALLET DETAIL

See Note 7

NOTES:

1. (XXX) Indicates sand filled module location and weight of sand in pounds for each module. Module spacing is based on the greater diameter of the module.
2. All sand weights are nominal.
3. Temporary crash cushion arrays shall not encroach on the traveled way.
4. Place the top of Type R marker panel 1" below the module lid.
5. Refer to Standard Plan A73B for marker details.
6. Approach speeds indicated conform to NCHRP 350 Report criteria.
7. Use of pallets is optional.

STATE OF CALIFORNIA
DEPARTMENT OF TRANSPORTATION

TEMPORARY CRASH CUSHION, SAND FILLED (UNIDIRECTIONAL)

NO SCALE

RSP T1A DATED JUNE 6, 2008 SUPERSEDES STANDARD PLAN T1A
DATED MAY 1, 2006 - PAGE 211 OF THE STANDARD PLANS BOOK DATED MAY 2006.

REVISED STANDARD PLAN RSP T1A

2006 REVISED STANDARD PLAN RSP T1A

5-15-08

DIST	COUNTY	ROUTE	POST MILES TOTAL PROJECT	SHEET NO.	TOTAL SHEETS
05	SB	101	65.0/84.1	11	12

Randell D. Hiatt
REGISTERED CIVIL ENGINEER

June 6, 2008
PLANS APPROVAL DATE

REGISTERED PROFESSIONAL ENGINEER
Randell D. Hiatt
No. C50200
Exp. 6-30-09
CIVIL
STATE OF CALIFORNIA

The State of California or its officers or agents shall not be responsible for the accuracy or completeness of electronic copies of this plan sheet.

To accompany plans dated 1-31-11

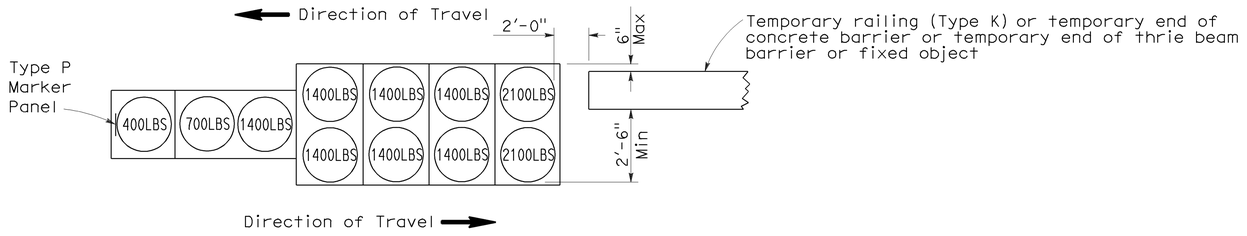

ARRAY 'TB11'

Approach speed less than 45 mph

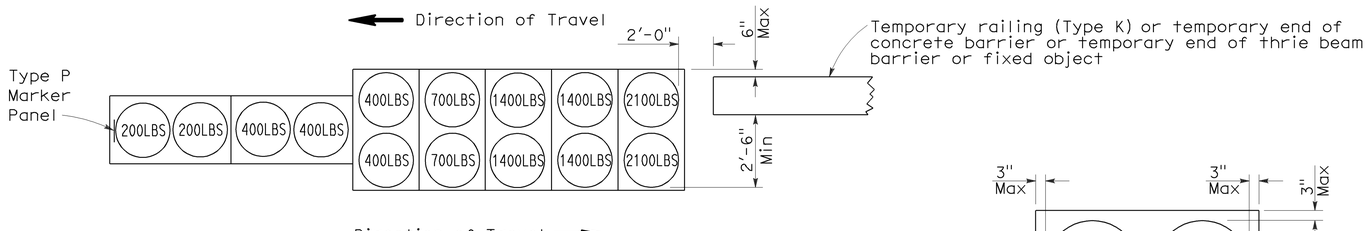

ARRAY 'TB14'

Approach speed 45 mph or more

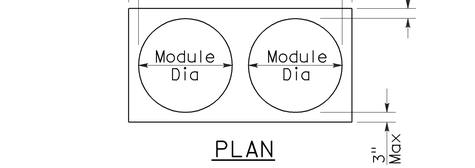

PLAN

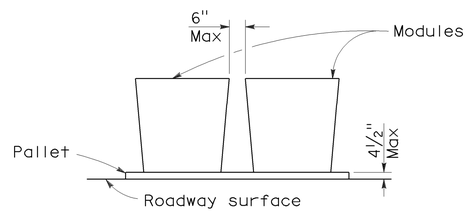

ELEVATION

CRASH CUSHION PALLET DETAIL

See Note 7

NOTES:

1. (XXX) Indicates sand filled module location and weight of sand in pounds for each module. Module spacing is based on the greater diameter of the module.
2. All sand weights are nominal.
3. Temporary crash cushion arrays shall not encroach on the traveled way.
4. Place the Type P marker panel so that the bottom of the panel rests upon the pallet.
5. Refer to Standard Plan A73B for marker details.
6. Approach speeds indicated conform to NCHRP 350 Report criteria.
7. Use of pallets is optional.

STATE OF CALIFORNIA
DEPARTMENT OF TRANSPORTATION

TEMPORARY CRASH CUSHION, SAND FILLED (BIDIRECTIONAL)

NO SCALE

RSP T1B DATED JUNE 6, 2008 SUPERSEDES STANDARD PLAN T1B
DATED MAY 1, 2006 - PAGE 212 OF THE STANDARD PLANS BOOK DATED MAY 2006.

REVISED STANDARD PLAN RSP T1B

2006 REVISED STANDARD PLAN RSP T1B

5-15-08

DIST	COUNTY	ROUTE	POST MILES TOTAL PROJECT	SHEET NO.	TOTAL SHEETS
05	SB	101	65.0/84.1	12	12

Randell D. Hiatt
REGISTERED CIVIL ENGINEER

June 6, 2008
PLANS APPROVAL DATE

REGISTERED PROFESSIONAL ENGINEER
Randell D. Hiatt
No. C50200
Exp. 6-30-09
CIVIL
STATE OF CALIFORNIA

The State of California or its officers or agents shall not be responsible for the accuracy or completeness of electronic copies of this plan sheet.

To accompany plans dated 1-31-11

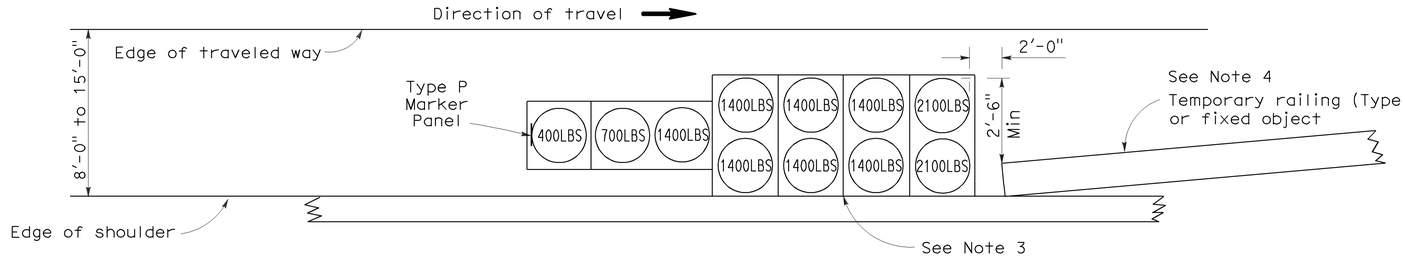

ARRAY 'TS11'

Approach speed less than 45 mph
See Note 9

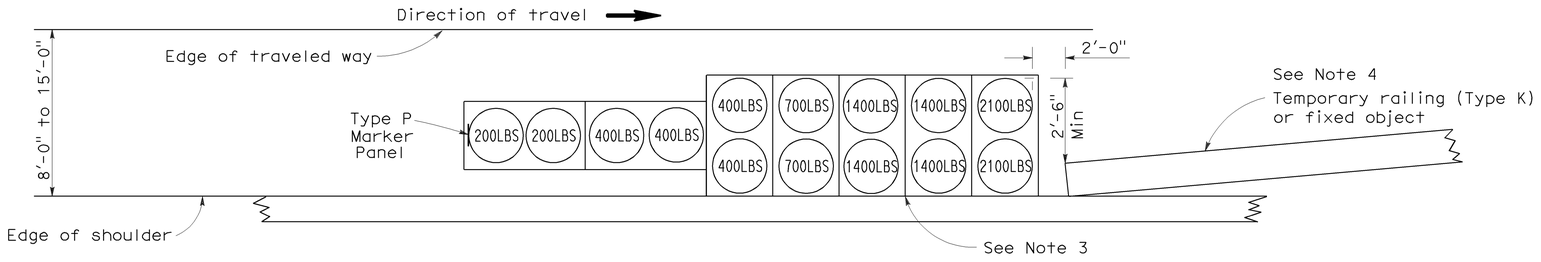

ARRAY 'TS14'

Approach speed 45 mph or more
See Note 9

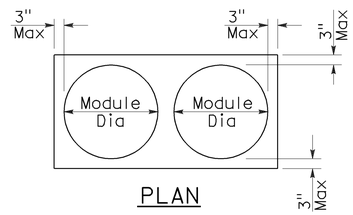

PLAN

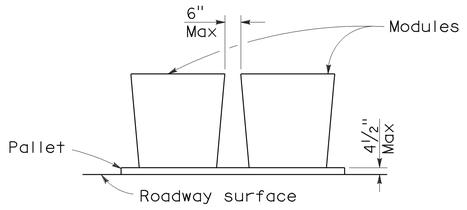

ELEVATION

CRASH CUSHION PALLET DETAIL

See Note 11

NOTES:

1. (XXX) Indicates sand filled module location and weight of sand in pounds for each module. Module spacing is based on the greater diameter of the module.
2. All sand weights are nominal.
3. The temporary crash cushion arrays shown on this plan shall be used only in locations where there will be traffic on one side of the temporary crash cushion array.
4. If the fixed object or approach end of the temporary railing is less than 15'-0" from the edge of traveled way, a temporary crash cushion is required in a construction or work zone.
5. Temporary crash cushion arrays shall not encroach on the traveled way.
6. Arrays for median shoulders shall conform to details shown on this plan for outside shoulders.
7. Place the Type P marker panel so that the bottom of the panel rests upon the pallet and faces traffic.
8. Refer to Standard Plan A73B for marker details.
9. For shoulder widths less than 8'-0", appropriate approved crash cushion protection, other than sand filled modules, shall be provided at fixed objects and at approach ends of temporary railing. The specific type of crash cushion shall be as shown on the project plans or as specified in the Special Provisions, or if not shown on the project plans or specified in the Special Provisions, shall be as approved by the Engineer.
10. Approach speeds indicated conform to NCHRP 350 Report criteria.
11. Use of pallets is optional.

STATE OF CALIFORNIA
DEPARTMENT OF TRANSPORTATION

TEMPORARY CRASH CUSHION, SAND FILLED (SHOULDER INSTALLATIONS)

NO SCALE

RSP T2 DATED JUNE 6, 2008 SUPERSEDES STANDARD PLAN T2
DATED MAY 1, 2006 - PAGE 213 OF THE STANDARD PLANS BOOK DATED MAY 2006.

REVISED STANDARD PLAN RSP T2

2006 REVISED STANDARD PLAN RSP T2

5-15-08