ACSTP-4723(004)E

Dist	COUNTY	ROUTE	POST MILES TOTAL PROJECT	SHEET No.	TOTAL SHEETS
05	Mon	1	22.6/22.8	1	86

STATE OF CALIFORNIA

DEPARTMENT OF TRANSPORTATION

PROJECT PLANS FOR CONSTRUCTION ON

STATE HIGHWAY

IN MONTEREY COUNTY
NEAR LUCIA
FROM 1.6 MILES TO 1.8 MILES
NORTH OF LIMEKILN CREEK BRIDGE

TO BE SUPPLEMENTED BY STANDARD PLANS DATED MAY 2006

INDEX OF PLANS

SHEET No.	DESCRIPTION
1	TITLE AND LOCATION MAP
2-4	TYPICAL CROSS SECTIONS
5	LAYOUTS
6	PROFILE AND SUPERELEVATION DIAGRAM
7-13	DRAINAGE PLAN, PROFILES, DETAILS AND QUANTITIES
14	UTILITY PLAN
15	CONSTRUCTION AREA SIGNS
16-18	STAGE CONSTRUCTION, TRAFFIC HANDLING PLAN AND QUANTITIES
19-20	PAVEMENT DELINEATION PLAN AND QUANTITIES
21	SUMMARY OF QUANTITIES
22	LANDSCAPE DETAILS
23	PLANT AND IRRIGATION PLAN
24-27	ELECTRICAL PLANS
28-47	REVISED AND NEW STANDARD PLANS

STRUCTURE PLANS

48-86	DANI CREEK RETAINING WALL Br No. 44E0100

THE STANDARD PLANS LIST APPLICABLE TO THIS CONTRACT IS INCLUDED IN THE NOTICE TO BIDDERS AND SPECIAL PROVISIONS BOOK.

LOCATION MAP

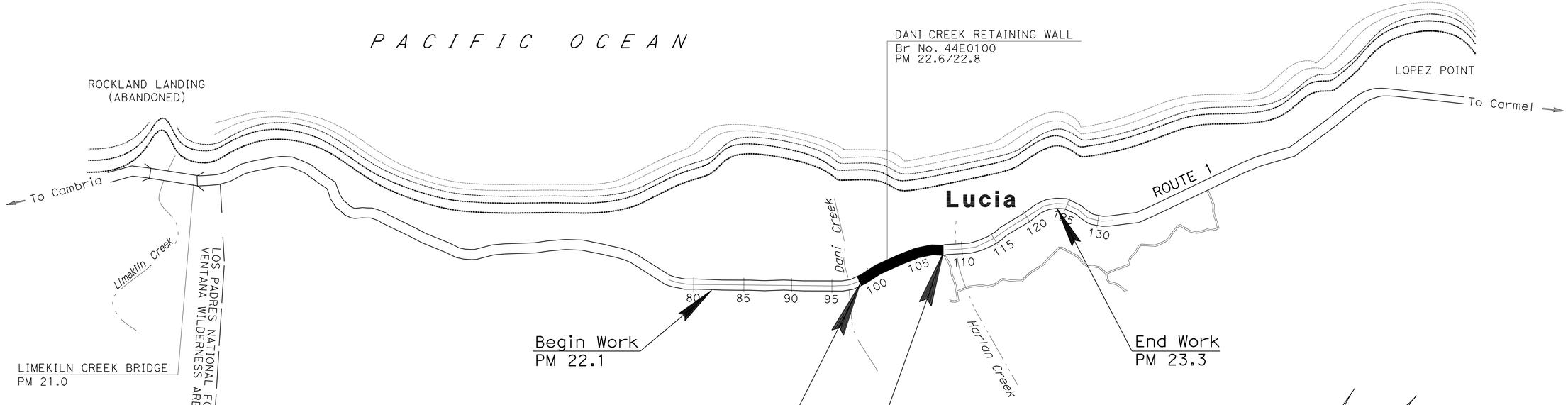

NO SCALE

PROJECT MANAGER KEN DOSTALEK

DESIGN ENGINEER STEVE WYATT

8-05-10
PROJECT ENGINEER DATE
REGISTERED CIVIL ENGINEER

August 16, 2010
PLANS APPROVAL DATE

REGISTERED PROFESSIONAL ENGINEER S. LOZON No. 43136 Exp. 3-31-12 CIVIL STATE OF CALIFORNIA

THE STATE OF CALIFORNIA OR ITS OFFICERS OR AGENTS SHALL NOT BE RESPONSIBLE FOR THE ACCURACY OR COMPLETENESS OF SCANNED COPIES OF THIS PLAN SHEET.

THE CONTRACTOR SHALL POSSESS THE CLASS (OR CLASSES) OF LICENSE AS SPECIFIED IN THE "NOTICE TO BIDDERS."

CONTRACT No.	05-0T5604
PROJECT ID	0500020037

LAST REVISION 08-05-10 DATE PLOTTED => 02-SEP-2010 TIME PLOTTED => 12:53

Dist	COUNTY	ROUTE	POST MILES TOTAL PROJECT	SHEET No.	TOTAL SHEETS
05	Mon	1	22.6/22.8	2	86

REGISTERED CIVIL ENGINEER 8-5-10 DATE

8-16-10
PLANS APPROVAL DATE

REGISTERED PROFESSIONAL ENGINEER S. LOZON No. 43136 Exp. 3-31-12 CIVIL STATE OF CALIFORNIA

THE STATE OF CALIFORNIA OR ITS OFFICERS OR AGENTS SHALL NOT BE RESPONSIBLE FOR THE ACCURACY OR COMPLETENESS OF SCANNED COPIES OF THIS PLAN SHEET.

NOTES:

1. DIMENSIONS OF THE PAVEMENT STRUCTURES (STRUCTURAL SECTIONS) ARE SUBJECT TO TOLERANCES SPECIFIED IN THE STANDARD SPECIFICATIONS.
2. SUPERELEVATIONS ARE SHOWN ON THE SUPERELEVATION DIAGRAM.
3. SEE STRUCTURAL PLANS FOR RETAINING WALL DETAILS.

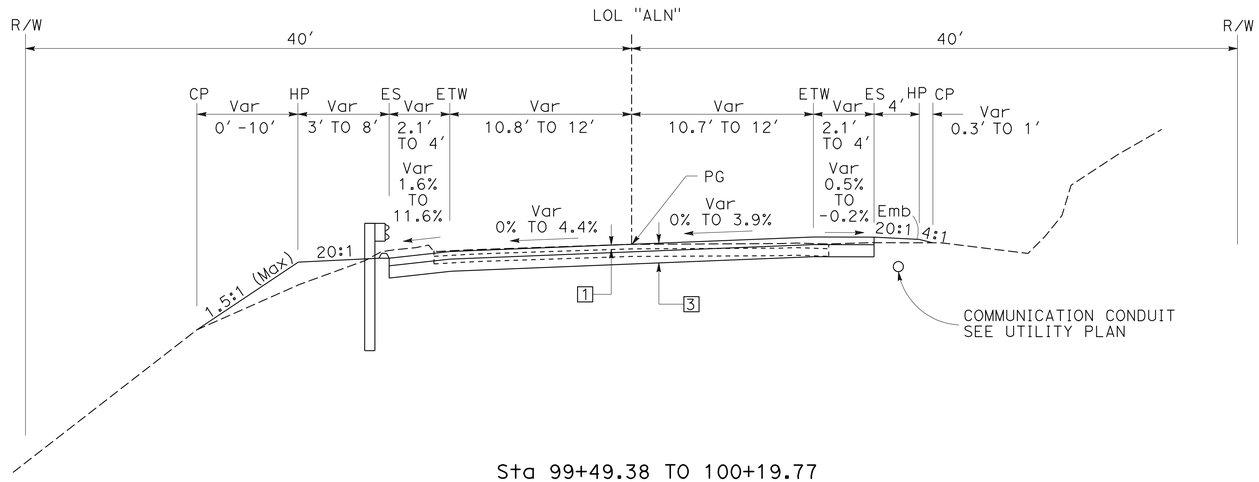

Sta 99+49.38 TO 100+19.77

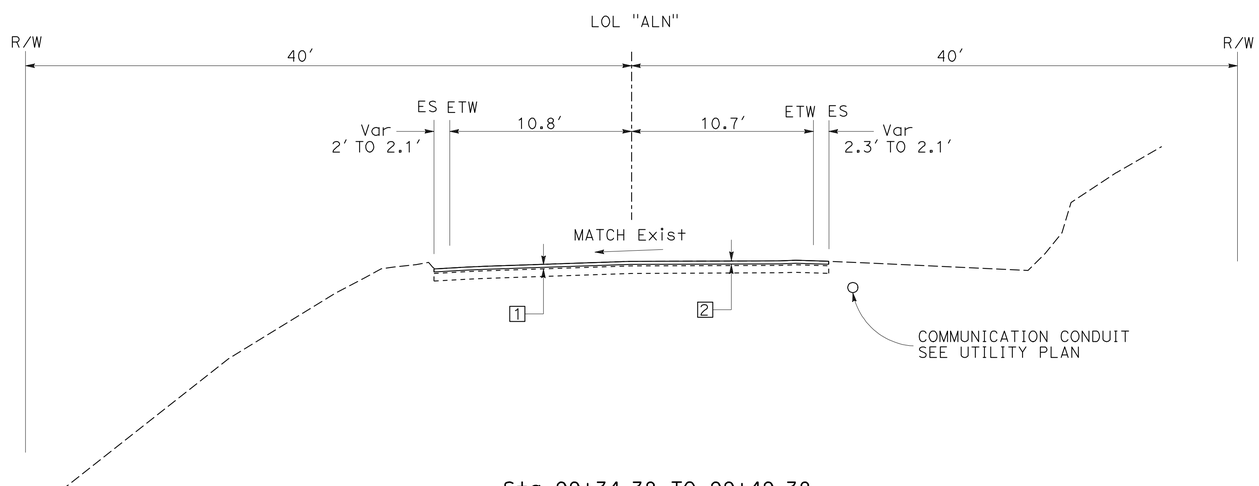

Sta 99+34.38 TO 99+49.38

ROUTE 1

STRUCTURAL SECTIONS

1 — Exist AC

2 — (0.2′) COLD PLANE AC Pvmt
0.2′ HMA (TYPE B)

3 — 0.5′ HMA (TYPE B)
0.8′ CI 2 AB

TYPICAL CROSS SECTIONS X-1

NO SCALE

STATE OF CALIFORNIA - DEPARTMENT OF TRANSPORTATION
Caltrans®
DESIGN

FUNCTIONAL SUPERVISOR: S. WYATT
CALCULATED-DESIGNED BY: S. LOZON
CHECKED BY: M. O'NEAL
REVISED BY
DATE REVISED

LAST REVISION 08-05-10
DATE PLOTTED => 24-AUG-2010
TIME PLOTTED => 10:40

Dist	COUNTY	ROUTE	POST MILES TOTAL PROJECT	SHEET No.	TOTAL SHEETS
05	Mon	1	22.6/22.8	3	86

REGISTERED CIVIL ENGINEER 8-5-10 DATE

8-16-10
PLANS APPROVAL DATE

REGISTERED PROFESSIONAL ENGINEER S. LOZON No. 43136 Exp. 3-31-12 CIVIL STATE OF CALIFORNIA

THE STATE OF CALIFORNIA OR ITS OFFICERS OR AGENTS SHALL NOT BE RESPONSIBLE FOR THE ACCURACY OR COMPLETENESS OF SCANNED COPIES OF THIS PLAN SHEET.

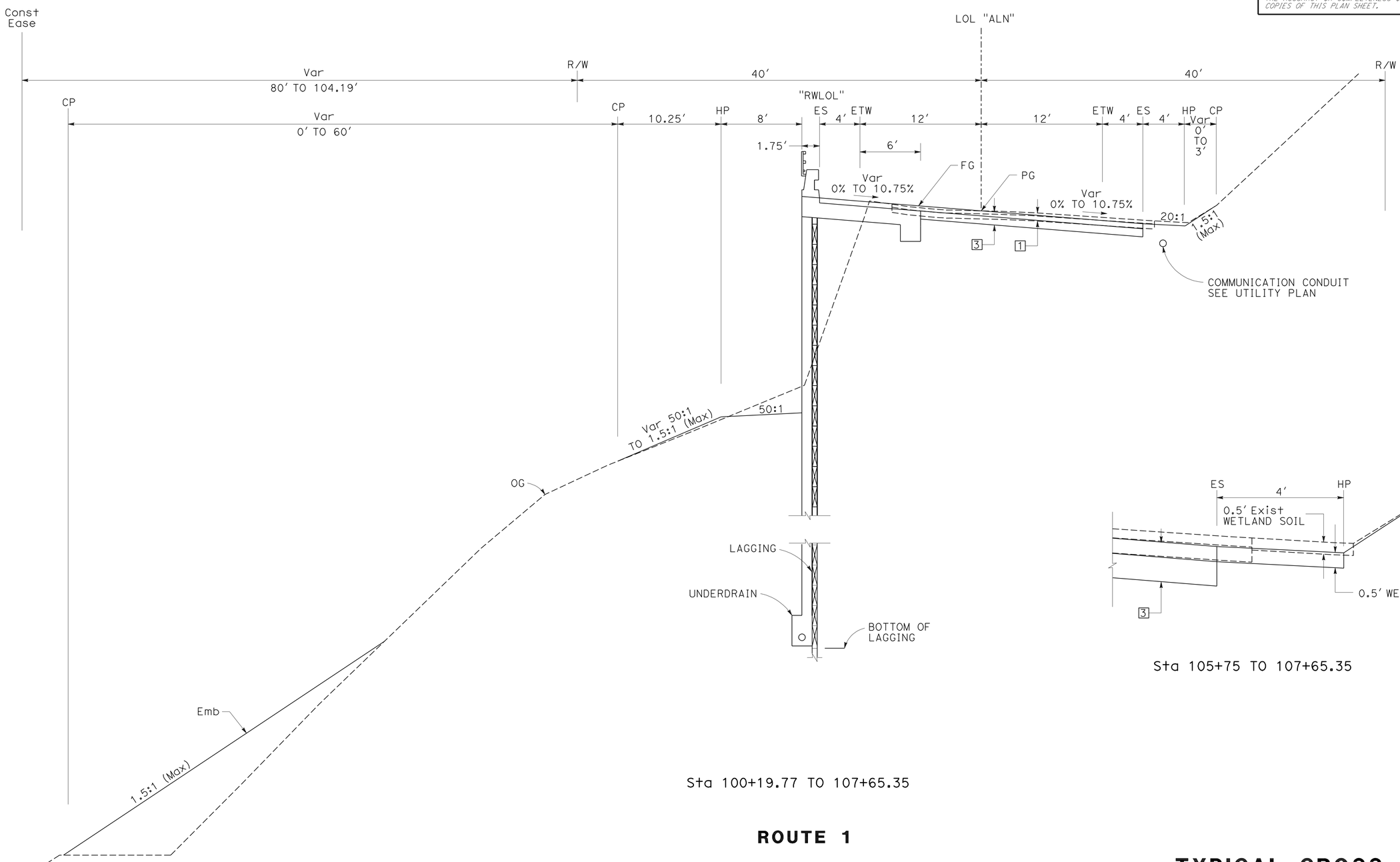

Sta 105+75 TO 107+65.35

Sta 100+19.77 TO 107+65.35

ROUTE 1

TYPICAL CROSS SECTIONS X-2

NO SCALE

STATE OF CALIFORNIA - DEPARTMENT OF TRANSPORTATION
Caltrans® DESIGN

FUNCTIONAL SUPERVISOR: S. WYATT
CALCULATED-DESIGNED BY: S. LOZON
CHECKED BY: M. O'NEAL
REVISED BY
DATE REVISED

LAST REVISION 08-05-10
DATE PLOTTED => 24-AUG-2010
TIME PLOTTED => 10:40

Dist	COUNTY	ROUTE	POST MILES TOTAL PROJECT	SHEET No.	TOTAL SHEETS
05	Mon	1	22.6/22.8	4	86

REGISTERED CIVIL ENGINEER 8-5-10 DATE

8-16-10
PLANS APPROVAL DATE

REGISTERED PROFESSIONAL ENGINEER
S. LOZON
No. 43136
Exp. 3-31-12
CIVIL
STATE OF CALIFORNIA

THE STATE OF CALIFORNIA OR ITS OFFICERS OR AGENTS SHALL NOT BE RESPONSIBLE FOR THE ACCURACY OR COMPLETENESS OF SCANNED COPIES OF THIS PLAN SHEET.

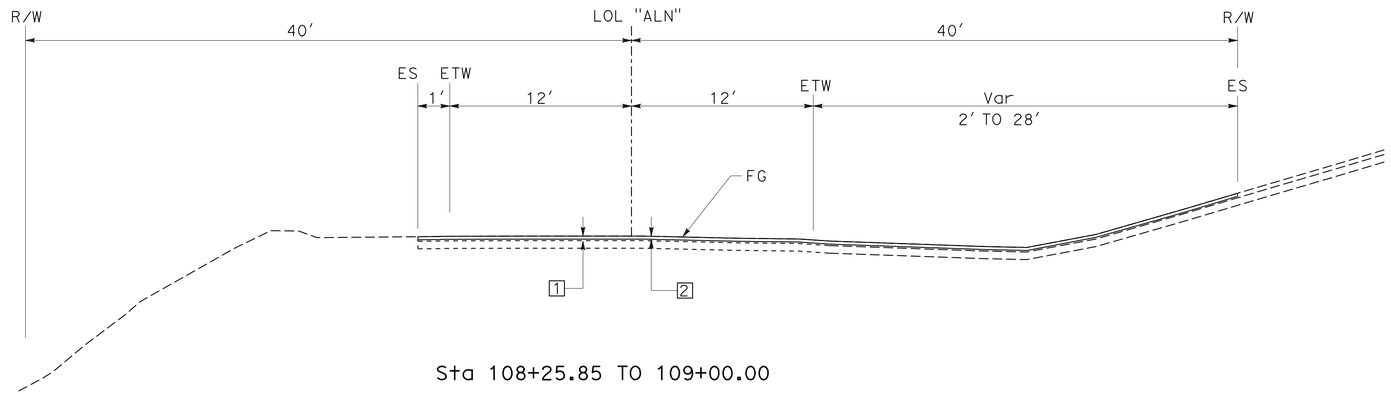

Sta 108+25.85 TO 109+00.00

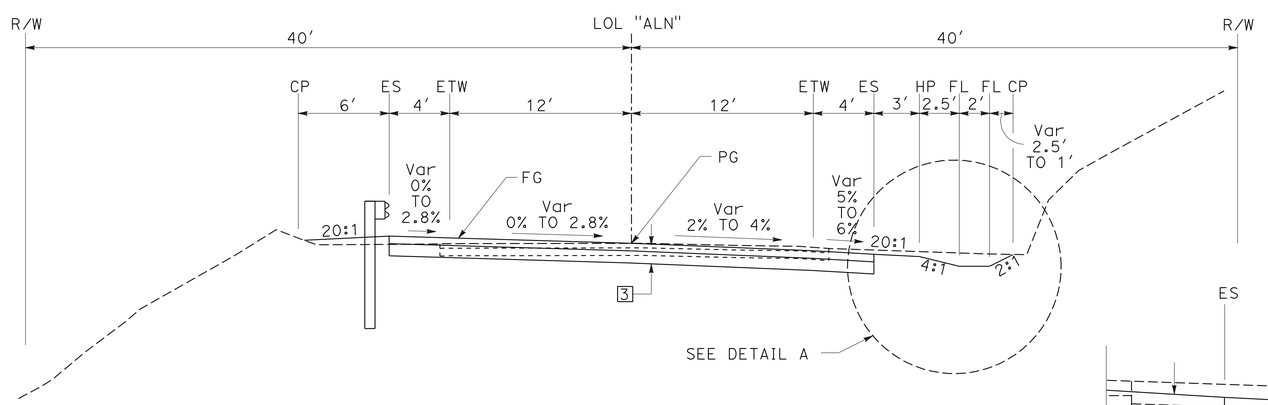

Sta 107+65.35 TO 108+25.85

ROUTE 1

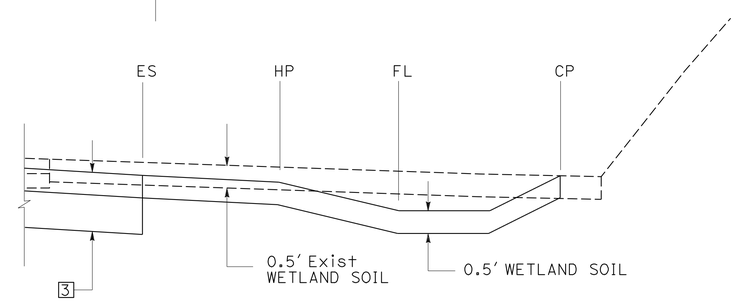

Sta 107+65.35 TO 108+25.85

DETAIL A

TYPICAL CROSS SECTIONS

NO SCALE

X-3

STATE OF CALIFORNIA - DEPARTMENT OF TRANSPORTATION
Caltrans®
DESIGN

FUNCTIONAL SUPERVISOR: S. WYATT
CALCULATED-DESIGNED BY: S. LOZON
CHECKED BY: M. O'NEAL
REVISED BY
DATE REVISED

LAST REVISION 08-05-10
DATE PLOTTED => 24-AUG-2010
TIME PLOTTED => 10:41

Dist	COUNTY	ROUTE	POST MILES TOTAL PROJECT	SHEET No.	TOTAL SHEETS
05	Mon	1	22.6/22.8	5	86

REGISTERED CIVIL ENGINEER 8-5-10 DATE

8-16-10
PLANS APPROVAL DATE

REGISTERED PROFESSIONAL ENGINEER S. LOZON No. 43136 Exp. 3-31-12 CIVIL STATE OF CALIFORNIA

THE STATE OF CALIFORNIA OR ITS OFFICERS OR AGENTS SHALL NOT BE RESPONSIBLE FOR THE ACCURACY OR COMPLETENESS OF SCANNED COPIES OF THIS PLAN SHEET.

NOTE:

FOR ACCURATE RIGHT OF WAY DATA, CONTACT RIGHT OF WAY ENGINEERING AT THE DISTRICT OFFICE.

LEGEND:

COLD PLANE AC PAVEMENT

ESA AREA

TFESA — TEMPORARY FENCE (TYPE ESA)

ABREVIATION:

SI = SLOPE INCLINEOMETER

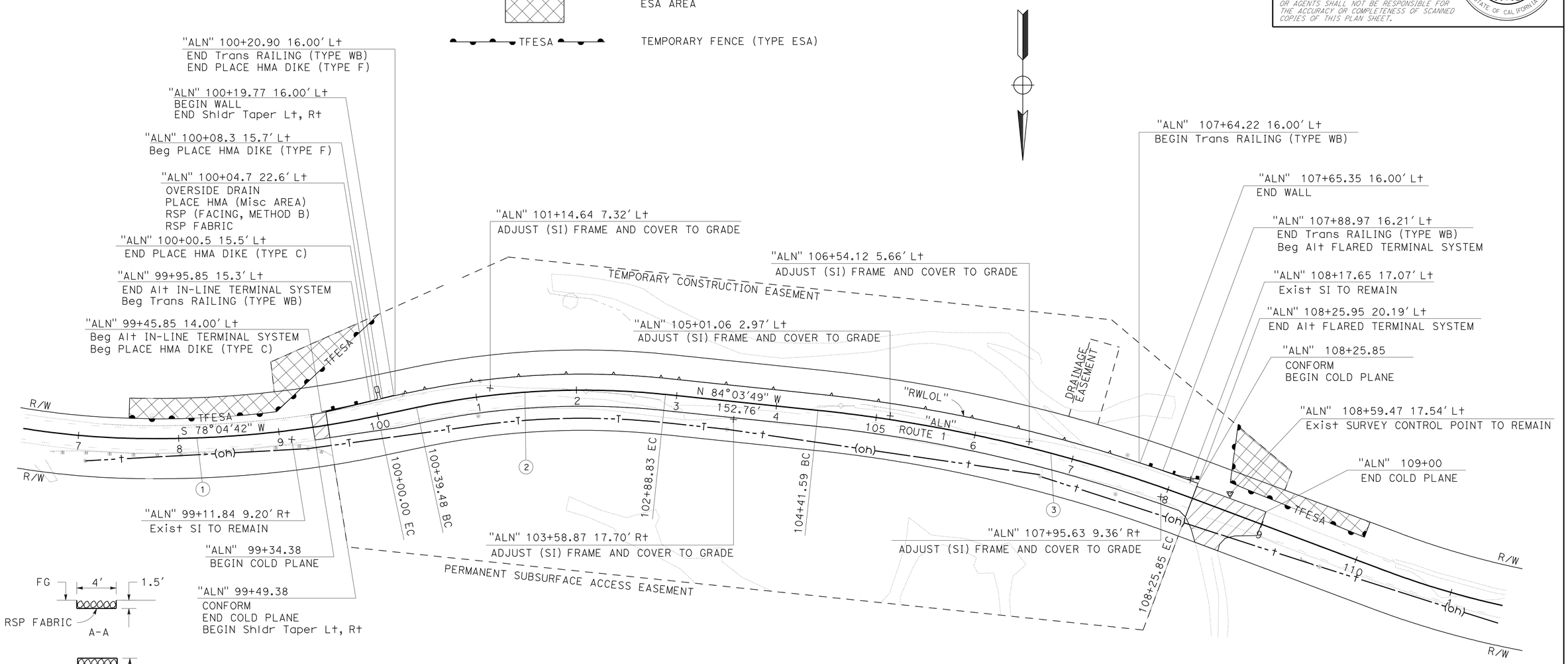

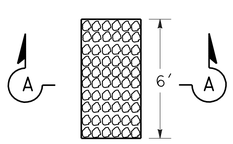

PLAN

RSP DETAIL

NO SCALE

CURVE DATA

No.	R	Δ	T	L
1	1058.19'	12°12'07"	113.11'	225.36'
2	800.00'	17°51'29"	125.69'	249.34'
3	1508.42'	14°35'45"	193.18'	384.26'

LAYOUT

SCALE: 1" = 50' **L-1**

STATE OF CALIFORNIA - DEPARTMENT OF TRANSPORTATION

Caltrans® DESIGN

FUNCTIONAL SUPERVISOR S. WYATT

CALCULATED-DESIGNED BY S. LOZON

CHECKED BY M. O'NEAL

REVISED BY

DATE REVISED

LAST REVISION 08-05-10 | DATE PLOTTED => 24-AUG-2010 | TIME PLOTTED => 10:41

Dist	COUNTY	ROUTE	POST MILES TOTAL PROJECT	SHEET No.	TOTAL SHEETS
05	Mon	1	22.6/22.8	6	86

REGISTERED CIVIL ENGINEER 8-5-10 DATE

8-16-10
PLANS APPROVAL DATE

REGISTERED PROFESSIONAL ENGINEER S. LOZON No. 43136 Exp. 3-31-12 CIVIL STATE OF CALIFORNIA

THE STATE OF CALIFORNIA OR ITS OFFICERS OR AGENTS SHALL NOT BE RESPONSIBLE FOR THE ACCURACY OR COMPLETENESS OF SCANNED COPIES OF THIS PLAN SHEET.

NOTE:

SUPERELEVATION AS SHOWN OR AS DIRECTED BY ENGINEER.

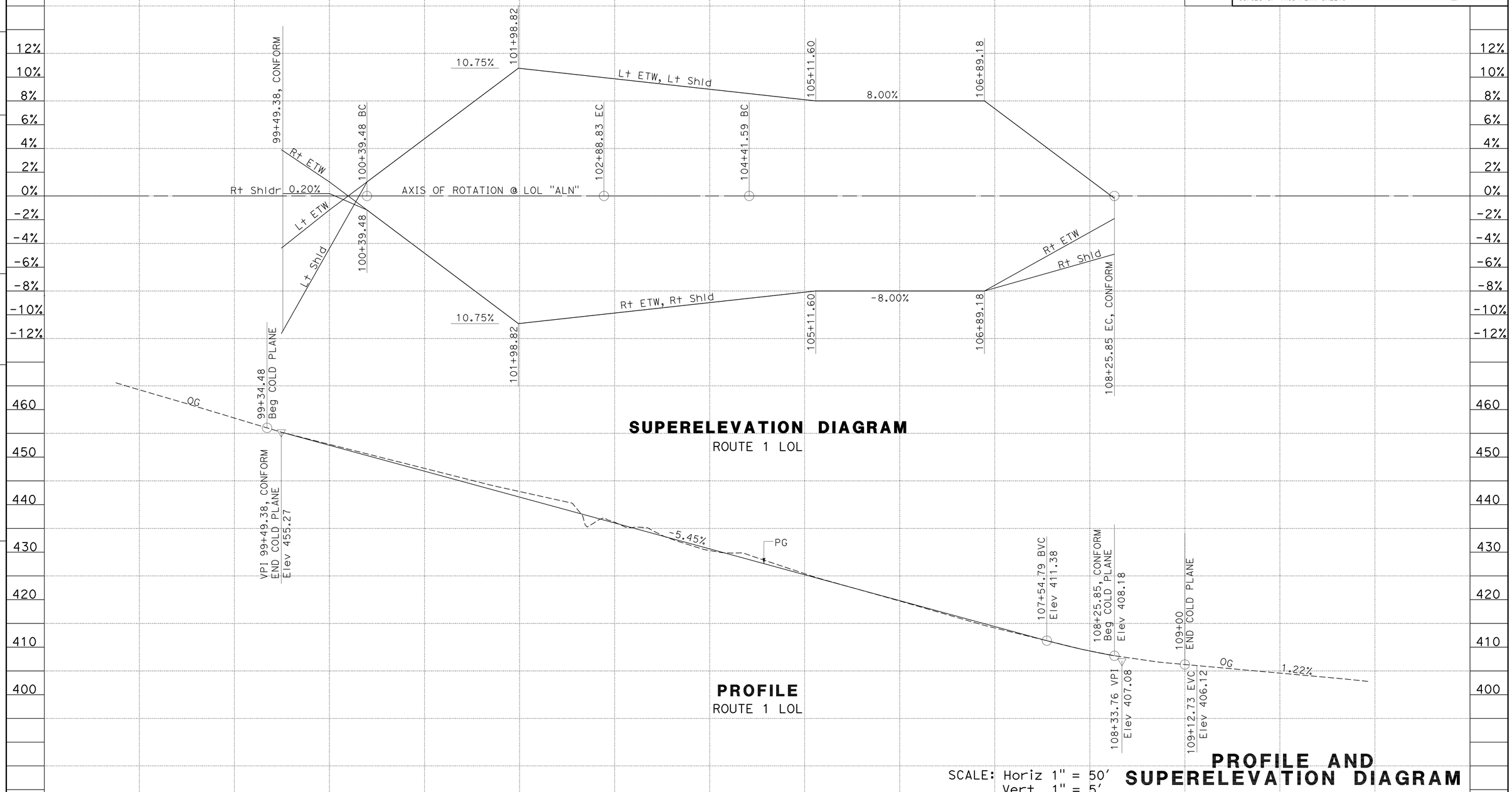

SUPERELEVATION DIAGRAM
ROUTE 1 LOL

PROFILE
ROUTE 1 LOL

SCALE: Horiz 1" = 50'
Vert 1" = 5'

PROFILE AND SUPERELEVATION DIAGRAM
PS-1

STATE OF CALIFORNIA - DEPARTMENT OF TRANSPORTATION
Caltrans®
DESIGN

FUNCTIONAL SUPERVISOR: S. WYATT
CALCULATED-DESIGNED BY: M. O'NEAL
CHECKED BY: S. LOZON
REVISED BY
DATE REVISED

LAST REVISION 08-05-10
DATE PLOTTED => 24-AUG-2010
TIME PLOTTED => 10:41

Dist	COUNTY	ROUTE	POST MILES TOTAL PROJECT	SHEET No.	TOTAL SHEETS
05	Mon	1	22.6/22.8	7	86

REGISTERED CIVIL ENGINEER 8-5-10 DATE

8-16-10
PLANS APPROVAL DATE

REGISTERED PROFESSIONAL ENGINEER S. LOZON No. 43136 Exp. 3-31-12 CIVIL STATE OF CALIFORNIA

THE STATE OF CALIFORNIA OR ITS OFFICERS OR AGENTS SHALL NOT BE RESPONSIBLE FOR THE ACCURACY OR COMPLETENESS OF SCANNED COPIES OF THIS PLAN SHEET.

NOTES:

1. FOR ACCURATE RIGHT OF WAY DATA, CONTACT RIGHT OF WAY ENGINEERING AT THE DISTRICT OFFICE.
2. FINAL DOWNDRAIN ALIGNMENT TO BE DETERMINED BY THE ENGINEER.
3. FINAL DOWNDRAIN OUTLET TO BE DETERMINED BY THE ENGINEER.

LEGEND

DRAINAGE SYSTEM No.

DRAINAGE UNIT No.

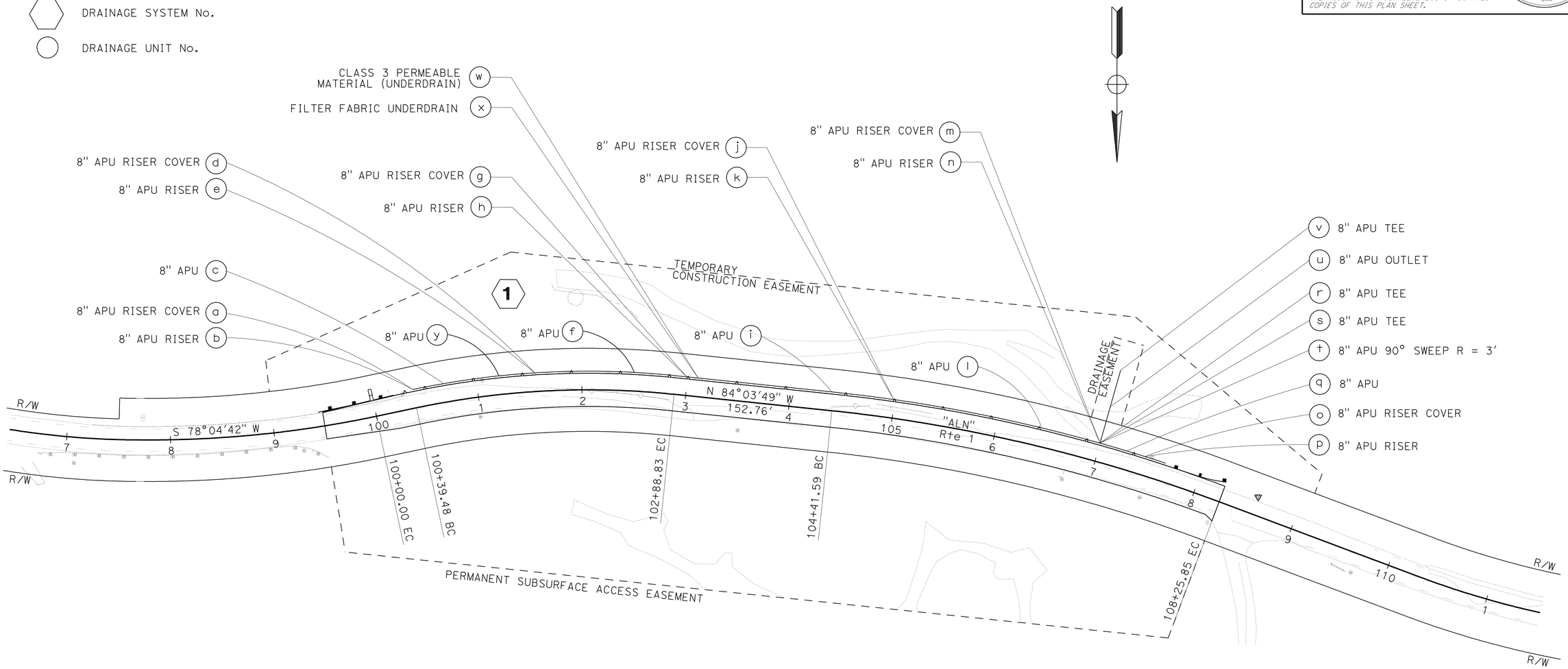

THIS PLAN ACCURATE FOR DRAINAGE WORK ONLY.

DRAINAGE PLAN

SCALE: 1" = 50' **D-1**

STATE OF CALIFORNIA - DEPARTMENT OF TRANSPORTATION
Caltrans
DESIGN

FUNCTIONAL SUPERVISOR: S. WYATT
CALCULATED-DESIGNED BY: S. LOZON
CHECKED BY: M. O'NEAL
REVISED BY
DATE REVISED

LAST REVISION 08-05-10 | DATE PLOTTED => 24-AUG-2010 | TIME PLOTTED => 10:41

Dist	COUNTY	ROUTE	POST MILES TOTAL PROJECT	SHEET No.	TOTAL SHEETS
05	Mon	1	22.6/22.8	8	86

REGISTERED CIVIL ENGINEER 8-5-10 DATE

8-16-10
PLANS APPROVAL DATE

REGISTERED PROFESSIONAL ENGINEER S. LOZON No. 43136 Exp. 3-31-12 CIVIL STATE OF CALIFORNIA

THE STATE OF CALIFORNIA OR ITS OFFICERS OR AGENTS SHALL NOT BE RESPONSIBLE FOR THE ACCURACY OR COMPLETENESS OF SCANNED COPIES OF THIS PLAN SHEET.

NOTES:

1. LOCATIONS AND ELEVATIONS AS SHOWN OR AS DIRECTED BY ENGINEER.
2. FOR UNDERDRAIN DETAILS NOT SHOWN SEE STANDARD PLANS D102.
3. TOP OF CLASS III PERMEABLE MATERIAL IS 2' BELOW FG BENCH (SEE DD-1).

LEGEND

DRAINAGE SYSTEM No.

DRAINAGE UNIT No.

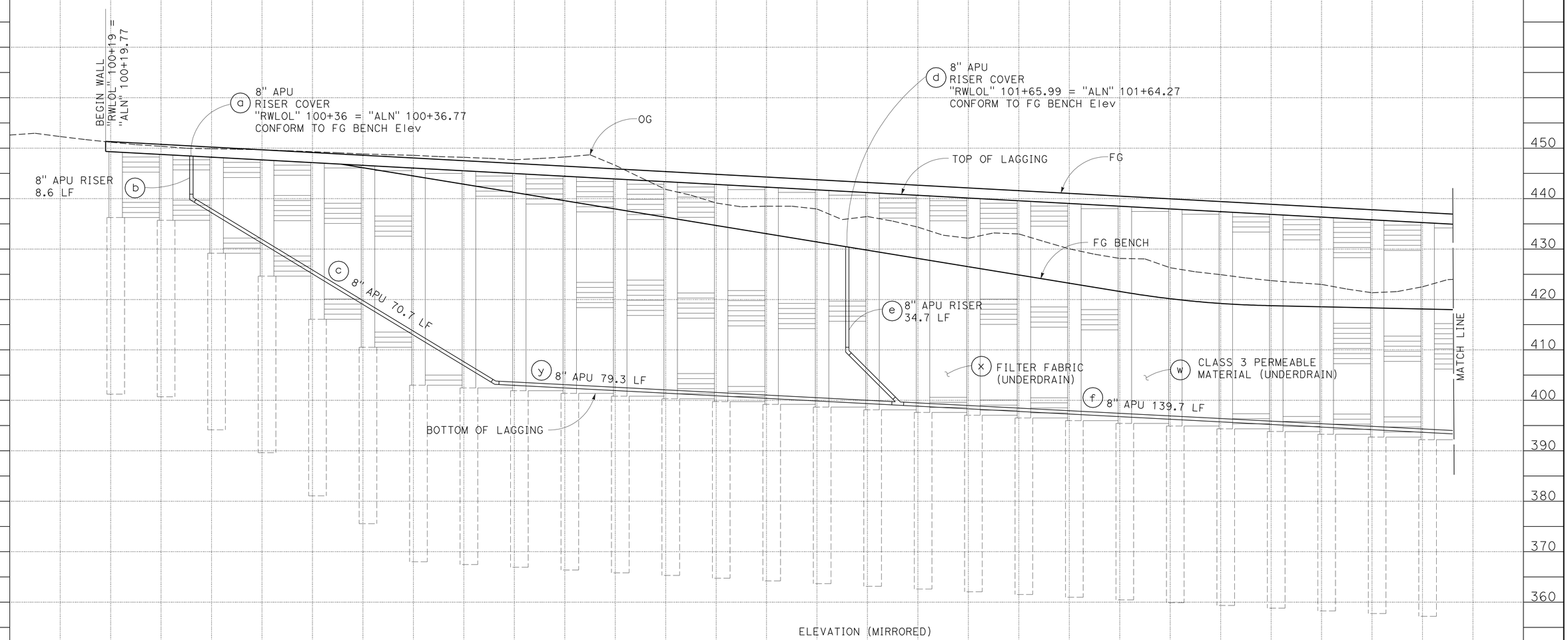

ELEVATION (MIRRORED)

DRAINAGE SYSTEM No. 1

DRAINAGE PROFILES

SCALE: Horiz 1" = 10'
Vert 1" = 10'

DP-1

STATE OF CALIFORNIA - DEPARTMENT OF TRANSPORTATION
Caltrans
DESIGN

FUNCTIONAL SUPERVISOR: S. WYATT
CALCULATED-DESIGNED BY: S. LOZON
CHECKED BY: M. O'NEAL
REVISED BY
DATE REVISED

LAST REVISION 08-05-10
DATE PLOTTED => 24-AUG-2010
TIME PLOTTED => 10:41

Dist	COUNTY	ROUTE	POST MILES TOTAL PROJECT	SHEET No.	TOTAL SHEETS
05	Mon	1	22.6/22.8	9	86

REGISTERED CIVIL ENGINEER 8-5-10 DATE

8-16-10
PLANS APPROVAL DATE

REGISTERED PROFESSIONAL ENGINEER S. LOZON No. 43136 Exp. 3-31-12 CIVIL STATE OF CALIFORNIA

THE STATE OF CALIFORNIA OR ITS OFFICERS OR AGENTS SHALL NOT BE RESPONSIBLE FOR THE ACCURACY OR COMPLETENESS OF SCANNED COPIES OF THIS PLAN SHEET.

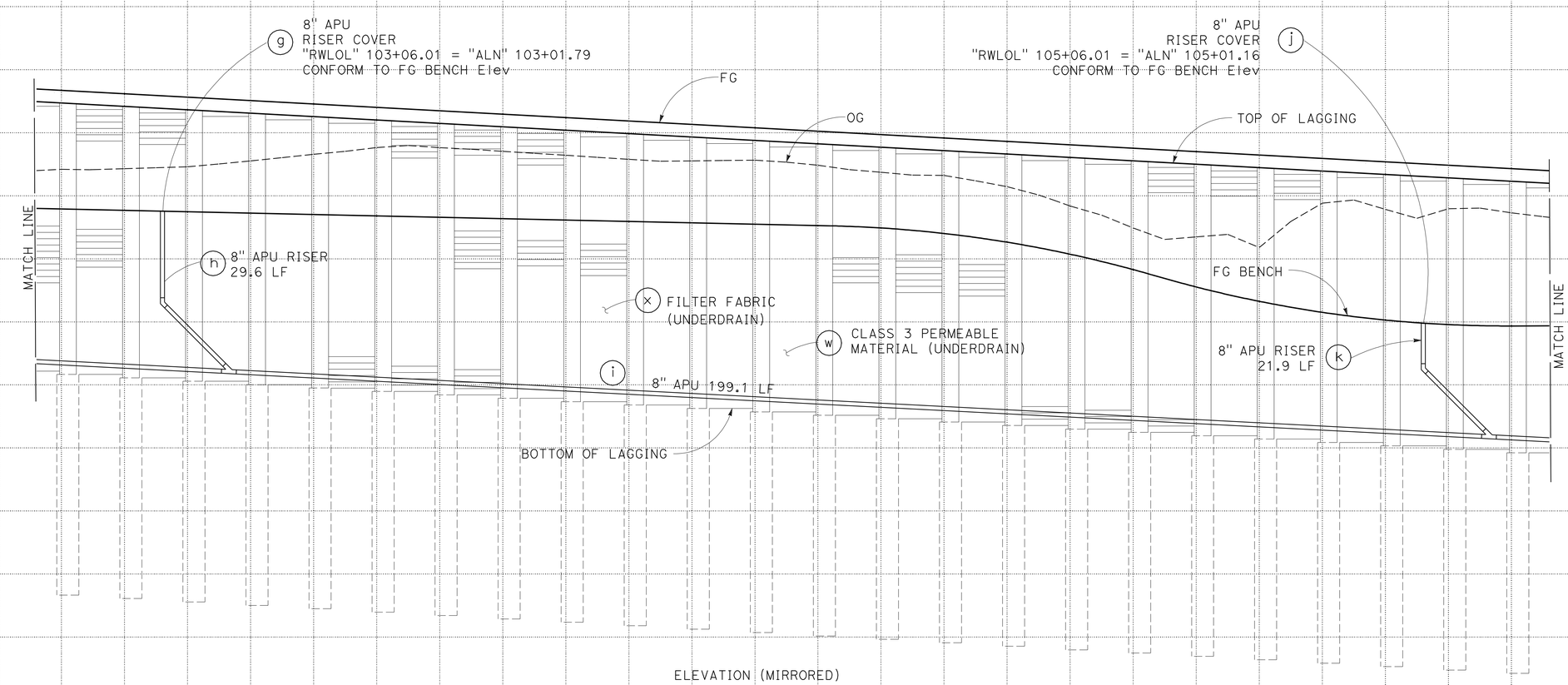

ELEVATION (MIRRORED)

DRAINAGE SYSTEM No. 1

"RWLOL" 103+00 +50 104+00 +50 105+00 +50

DRAINAGE PROFILES

SCALE: Horiz 1" = 10'
Vert 1" = 10'

DP-2

STATE OF CALIFORNIA - DEPARTMENT OF TRANSPORTATION
Caltrans®
DESIGN

FUNCTIONAL SUPERVISOR: S. WYATT
CALCULATED-DESIGNED BY: S. LOZON
CHECKED BY: M. O'NEAL
REVISED BY
DATE REVISED

LAST REVISION DATE PLOTTED => 24-AUG-2010
08-05-10 TIME PLOTTED => 10:41

Dist	COUNTY	ROUTE	POST MILES TOTAL PROJECT	SHEET No.	TOTAL SHEETS
05	Mon	1	22.6/22.8	10	86

REGISTERED CIVIL ENGINEER 8-5-10 DATE

8-16-10
PLANS APPROVAL DATE

REGISTERED PROFESSIONAL ENGINEER S. LOZON No. 43136 Exp. 3-31-12 CIVIL STATE OF CALIFORNIA

THE STATE OF CALIFORNIA OR ITS OFFICERS OR AGENTS SHALL NOT BE RESPONSIBLE FOR THE ACCURACY OR COMPLETENESS OF SCANNED COPIES OF THIS PLAN SHEET.

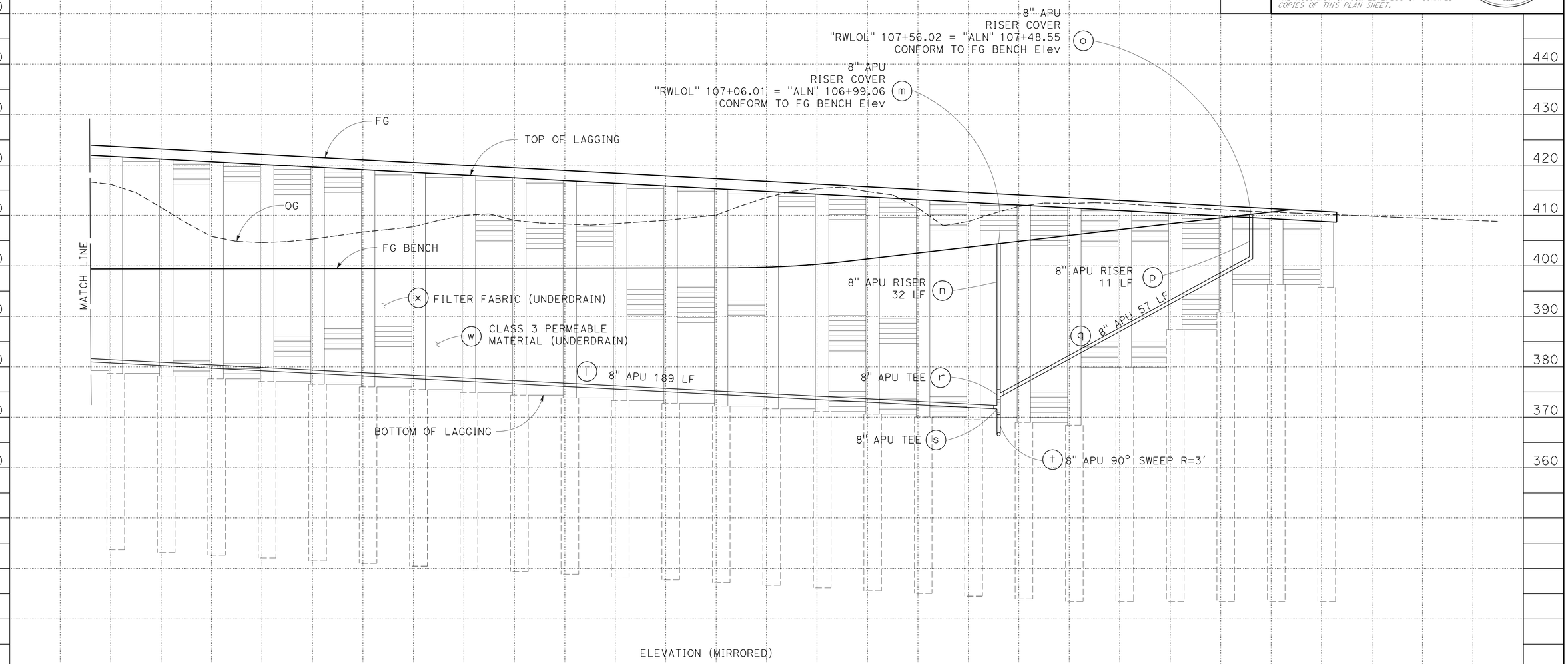

ELEVATION (MIRRORED)

DRAINAGE SYSTEM No. 1

"RWLOL" +50 106+00 +50 107+00 +50

DRAINAGE PROFILES

SCALE: Horiz 1" = 10'
Vert 1" = 10'

DP-3

STATE OF CALIFORNIA - DEPARTMENT OF TRANSPORTATION
Caltrans
DESIGN

FUNCTIONAL SUPERVISOR: S. WYATT
CALCULATED-DESIGNED BY: S. LOZON
CHECKED BY: M. O'NEAL
REVISED BY
DATE REVISED

LAST REVISION DATE PLOTTED => 24-AUG-2010
TIME PLOTTED => 10:41
08-05-10

Dist	COUNTY	ROUTE	POST MILES TOTAL PROJECT	SHEET No.	TOTAL SHEETS
05	Mon	1	22.6/22.8	11	86

REGISTERED CIVIL ENGINEER 8-5-10 DATE

8-16-10
PLANS APPROVAL DATE

REGISTERED PROFESSIONAL ENGINEER S. LOZON No. 43136 Exp. 3-31-12 CIVIL STATE OF CALIFORNIA

THE STATE OF CALIFORNIA OR ITS OFFICERS OR AGENTS SHALL NOT BE RESPONSIBLE FOR THE ACCURACY OR COMPLETENESS OF SCANNED COPIES OF THIS PLAN SHEET.

NOTES:

1. LOCATIONS AND ELEVATIONS AS SHOWN OR AS DIRECTED BY THE ENGINEER.
2. FOR UNDERDRAIN DETAILS NOT SHOWN SEE STANDARD PLANS D102.
3. SEE STRUCTURE PLANS FOR RETAINING WALL DETAILS.

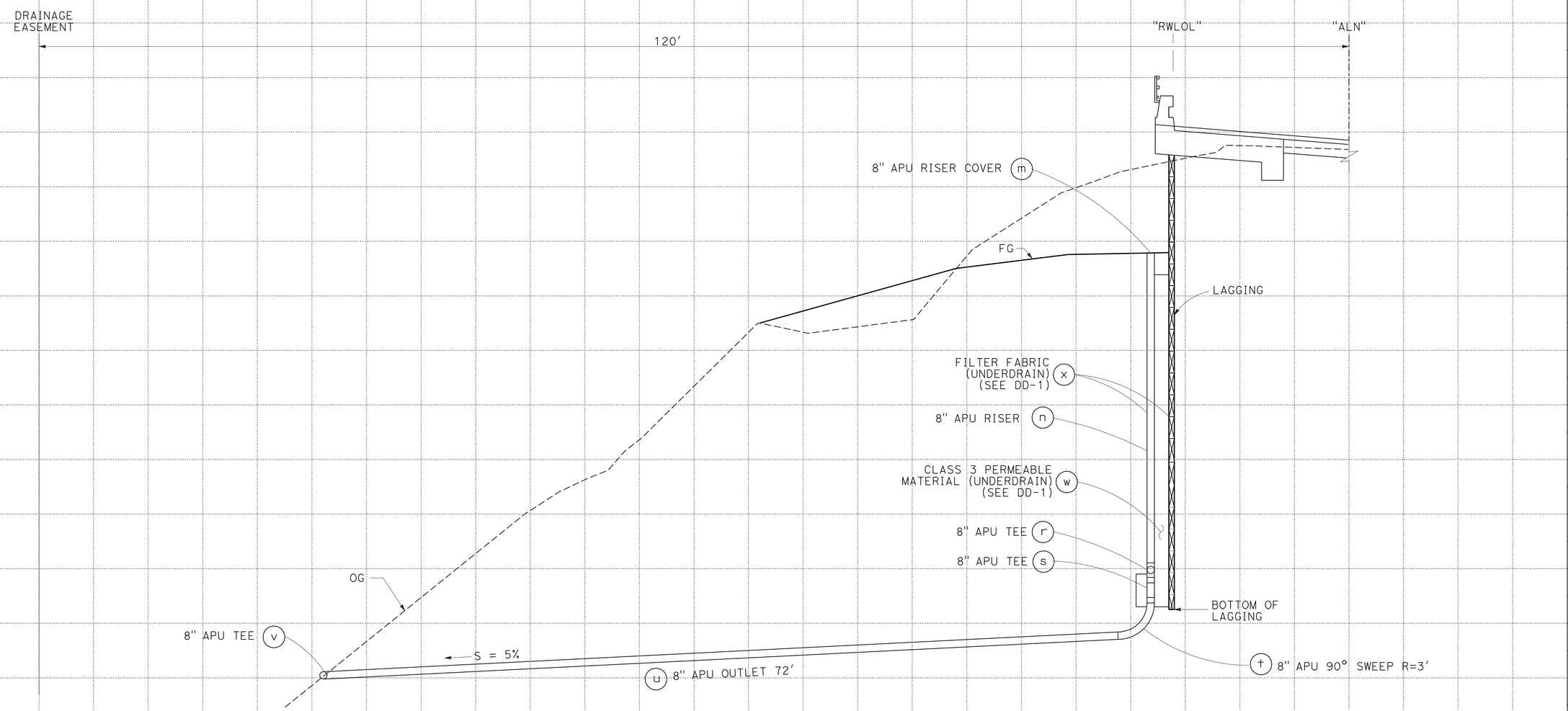

DRAINAGE SYSTEM No. 1

Sta "RWLOL" 107+06.01 = "ALN" 106+99.06

SCALE: Horiz 1" = 5'
Vert 1" = 5'

DRAINAGE PROFILES

DP-4

STATE OF CALIFORNIA - DEPARTMENT OF TRANSPORTATION
Caltrans
DESIGN

FUNCTIONAL SUPERVISOR: S. WYATT
CALCULATED-DESIGNED BY: S. LOZON
CHECKED BY: M. O'NEAL
REVISED BY
DATE REVISED

LAST REVISION 08-05-10 | DATE PLOTTED => 24-AUG-2010 | TIME PLOTTED => 10:28

Dist	COUNTY	ROUTE	POST MILES TOTAL PROJECT	SHEET No.	TOTAL SHEETS
05	Mon	1	22.6/22.8	12	86

REGISTERED CIVIL ENGINEER 8-5-10 DATE

8-16-10
PLANS APPROVAL DATE

REGISTERED PROFESSIONAL ENGINEER S. LOZON No. 43136 Exp. 3-31-12 CIVIL STATE OF CALIFORNIA

THE STATE OF CALIFORNIA OR ITS OFFICERS OR AGENTS SHALL NOT BE RESPONSIBLE FOR THE ACCURACY OR COMPLETENESS OF SCANNED COPIES OF THIS PLAN SHEET.

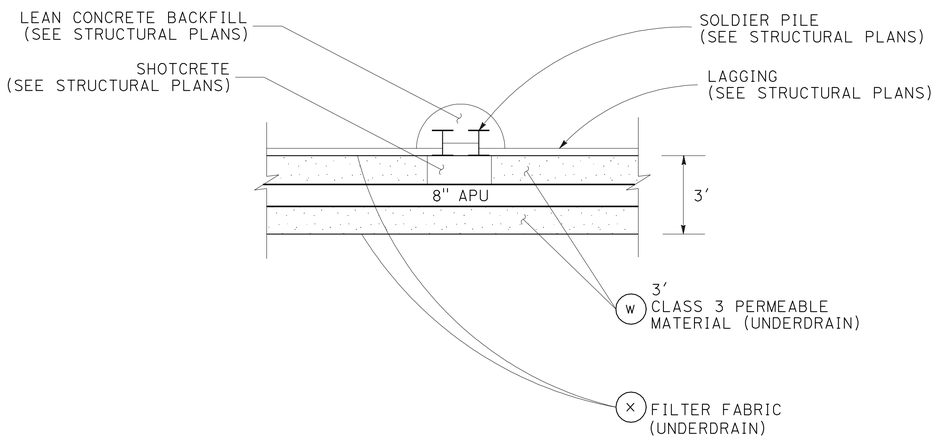

SECTION A-A

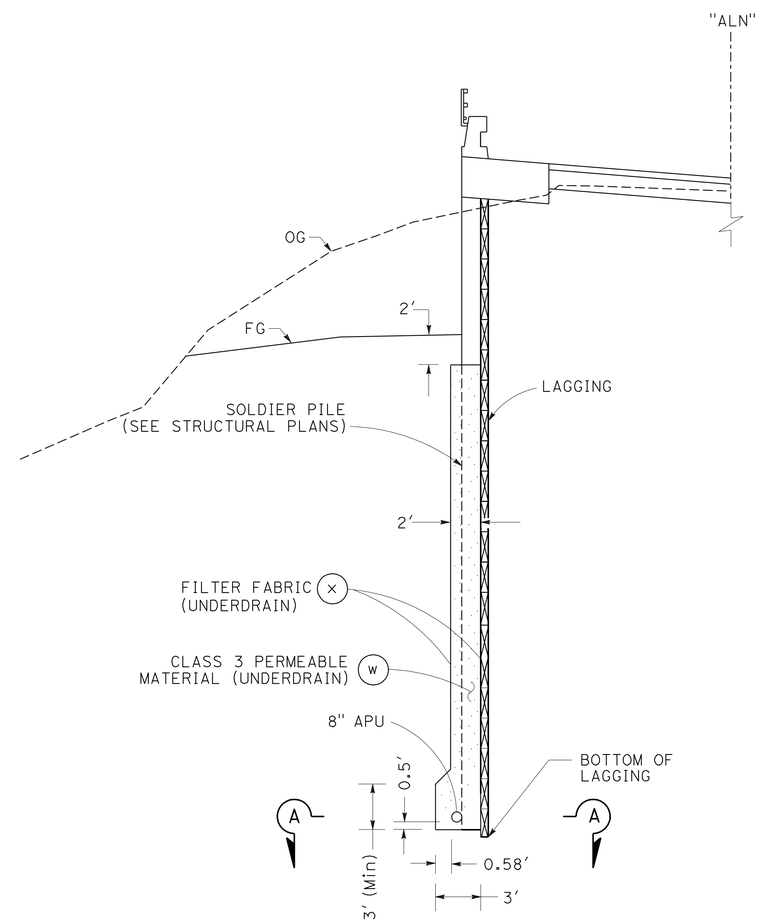

ELEVATION

DRAINAGE DETAILS
NO SCALE

DD-1

STATE OF CALIFORNIA - DEPARTMENT OF TRANSPORTATION
Caltrans®
DESIGN

FUNCTIONAL SUPERVISOR: S. WYATT
CALCULATED-DESIGNED BY: S. LOZON
CHECKED BY: M. O'NEAL
REVISED BY
DATE REVISED

LAST REVISION 08-05-10
DATE PLOTTED => 24-AUG-2010
TIME PLOTTED => 10:28

Dist	COUNTY	ROUTE	POST MILES TOTAL PROJECT	SHEET No.	TOTAL SHEETS
05	Mon	1	22.6/22.8	13	86

REGISTERED CIVIL ENGINEER 8-5-10 DATE

8-16-10
PLANS APPROVAL DATE

REGISTERED PROFESSIONAL ENGINEER S. LOZON No. 43136 Exp. 3-31-12 CIVIL STATE OF CALIFORNIA

THE STATE OF CALIFORNIA OR ITS OFFICERS OR AGENTS SHALL NOT BE RESPONSIBLE FOR THE ACCURACY OR COMPLETENESS OF SCANNED COPIES OF THIS PLAN SHEET.

ALTERNATIVE PIPE

ALLOWABLE PIPE MATERIAL									
DESIGNATION	DIPS SIZE (INCHES)	HDPE AASHTO M252 OR M294			HDPE PE3408		SLOT PATTERN		JOINT PERFORMANCE
		TYPE C	TYPE D	TYPE S	DR26 (50 PSI)	DR 32.5 (64 PSI)	AASHTO CLASS II	AASHTO CLASS I	
8" APU	8	NO	YES	YES	YES	YES	YES	YES	SOIL TIGHT
8" APU (RISER, OUTLET)	8	NO	YES	YES	YES	YES	NO	NO	SOIL TIGHT

ABREVIATIONS:

HDPE = HIGH DENSITY POLYETHYLENE

DRAINAGE QUANTITIES

DRAINAGE PLAN SHEET No.	DRAINAGE SYSTEM No.	DRAINAGE UNIT	FILTER FABRIC (UNDERDRAIN)	CLASS 3 PERMEABLE MATERIAL (UNDERDRAIN)	8" APU	(N) 8" APU RISER COVER	(N) 8" APU TEE	(N) 8" APU 90° SWEEP	DESCRIPTION	STATION	DRAINAGE UNIT	DRAINAGE SYSTEM No.
			SQYD	CY	LF	EA	EA	EA				
D-1	1	a				1			8" APU RISER COVER	"ALN" 100+36.77	a	1
		b			8.6				8" APU RISER		b	
		c			70.7				8" APU		c	
		d				1			8" APU RISER COVER	"ALN" 101+64.27	d	
		e			34.7				8" APU RISER		e	
		f			139.7				8" APU		f	
		g				1			8" APU RISER COVER	"ALN" 103+01.79	g	
		h			29.6				8" APU RISER		h	
		i			199.1				8" APU		i	
		j				1			8" APU RISER COVER	"ALN" 105+01.16	j	
		k			21.9				8" APU RISER		k	
		l			189				8" APU		l	
		m				1			8" APU RISER COVER	"ALN" 106+99.06	m	
		n			32				8" APU RISER		n	
		o				1			8" APU RISER COVER	"ALN" 107+48.55	o	
		p			11				8" APU RISER		p	
		q			57				8" APU		q	
		r					1		8" APU TEE		r	
		s					1		8" APU TEE		s	
		t						1	8" APU 90° SWEEP R = 3′		t	
		u			72				8" APU OUTLET		u	
		v					1		8" APU TEE		v	
		w		1,530					CI 3 PERMEABLE MATERIAL		w	
		x	3,930						FILTER FABRIC (UNDERDRAIN)		x	
		y			79.3				8" APU		y	
TOTAL			3,930	1,530	944.6	6	3	1				

DRAINAGE QUANTITIES
DQ-1

STATE OF CALIFORNIA - DEPARTMENT OF TRANSPORTATION
Caltrans® DESIGN

FUNCTIONAL SUPERVISOR: S. WYATT
CALCULATED-DESIGNED BY: S. LOZON
CHECKED BY: M. O'NEAL
REVISED BY / DATE REVISED

LAST REVISION 08-05-10 | DATE PLOTTED => 24-AUG-2010 | TIME PLOTTED => 10:28

Dist	COUNTY	ROUTE	POST MILES TOTAL PROJECT	SHEET No.	TOTAL SHEETS
05	Mon	1	22.6/22.8	14	86

REGISTERED CIVIL ENGINEER 8-5-10 DATE

8-16-10
PLANS APPROVAL DATE

REGISTERED PROFESSIONAL ENGINEER S. LOZON No. 43136 Exp. 3-31-12 CIVIL STATE OF CALIFORNIA

THE STATE OF CALIFORNIA OR ITS OFFICERS OR AGENTS SHALL NOT BE RESPONSIBLE FOR THE ACCURACY OR COMPLETENESS OF SCANNED COPIES OF THIS PLAN SHEET.

NOTE:

FOR ACCURATE RIGHT OF WAY DATA, CONTACT
RIGHT OF WAY ENGINEERING AT THE DISTRICT OFFICE.

LOCATIONS OF UTILITIES ARE APPROXIMATE.

LEGEND

——--+——————--(oh)——- Exist Telephone (Overhead) - AT&T

——--T——————--T——- TELEPHONE (UNDERGROUND)

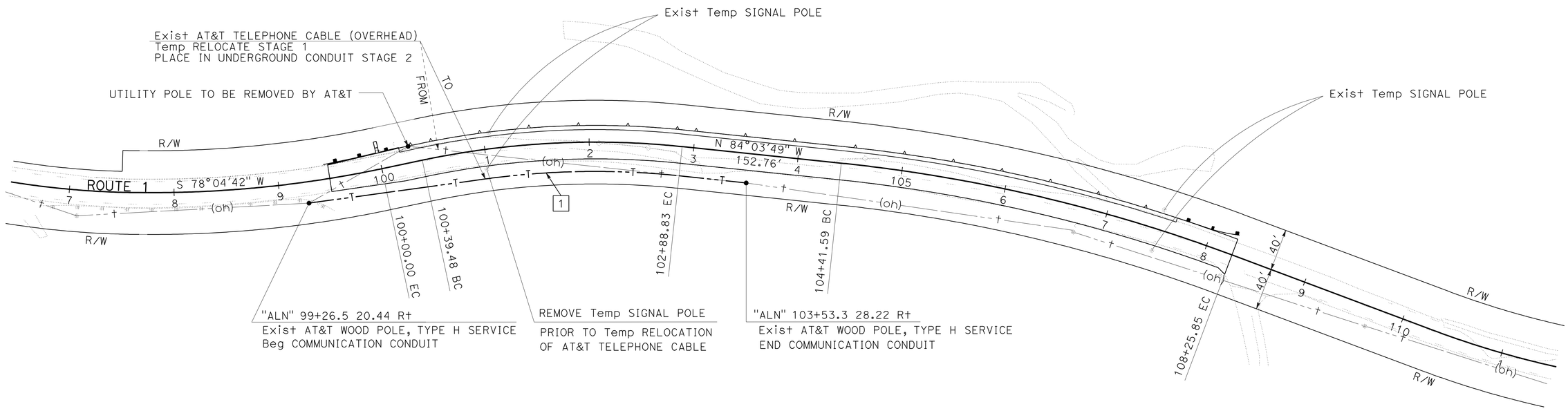

NOTE:

1 THE CONDUIT SHALL BE TYPE 3 AND LAID TO A DEPTH OF NOT LESS THAN 36" BELOW FINISHED GRADE. THE CONTRACTOR SHALL INSTALL THE CONDUIT, THE CONDUCTORS WILL BE INSTALLED BY AT&T.

THIS PLAN ACCURATE FOR UTILITY WORK ONLY.

UTILITY PLAN
COMMUNICATION CONDUIT

SCALE: 1" = 50'

U-1

STATE OF CALIFORNIA - DEPARTMENT OF TRANSPORTATION
Caltrans DESIGN

FUNCTIONAL SUPERVISOR: S. WYATT
CALCULATED-DESIGNED BY: S. LOZON
CHECKED BY: M. O'NEAL
REVISED BY
DATE REVISED

LAST REVISION 08-05-10 | DATE PLOTTED => 24-AUG-2010 | TIME PLOTTED => 10:29

Dist	COUNTY	ROUTE	POST MILES TOTAL PROJECT	SHEET No.	TOTAL SHEETS
05	Mon	1	22.6/22.8	15	86

REGISTERED CIVIL ENGINEER 8-5-10 DATE

8-16-10
PLANS APPROVAL DATE

REGISTERED PROFESSIONAL ENGINEER S. LOZON No. 43136 Exp. 3-31-12 CIVIL STATE OF CALIFORNIA

THE STATE OF CALIFORNIA OR ITS OFFICERS OR AGENTS SHALL NOT BE RESPONSIBLE FOR THE ACCURACY OR COMPLETENESS OF SCANNED COPIES OF THIS PLAN SHEET.

NOTE:

1. SIGN LOCATIONS SHOWN ARE APPROXIMATE. EXACT LOCATIONS TO BE DETERMINED BY THE ENGINEER.

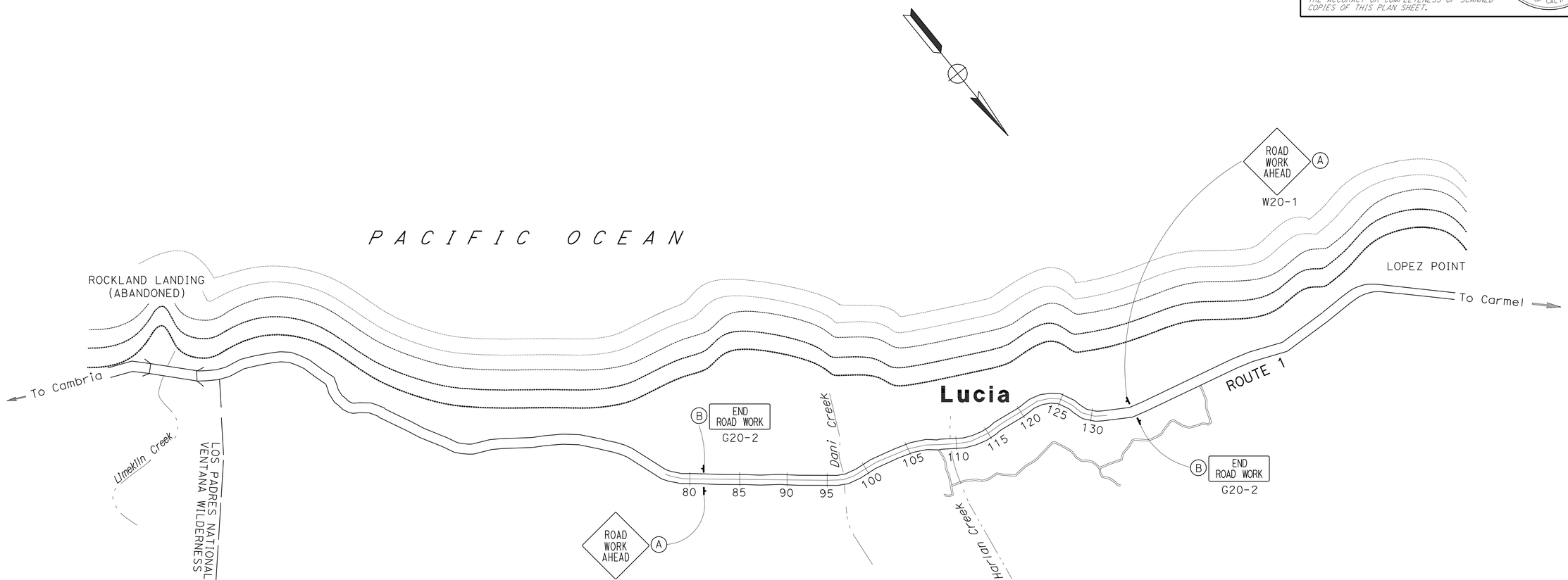

CONSTRUCTION AREA SIGNS (STATIONARY MOUNTED)

SIGN NO.	SIGN CODE	PANEL SIZE	NUMBER OF POST AND SIZE	SIGN MESSAGE	NUMBER OF SIGNS
A	W20-1	36" x 36"	1 - 4" x 6"	ROAD WORK AHEAD	2
B	G20-2	36" x 18"	1 - 4" x 4"	END ROAD WORK	2

NOTE: ALL SIGN PANEL AND POST SIZES ARE IN INCHES.

THIS PLAN ACCURATE FOR CONSTRUCTION AREA SIGN WORK ONLY.

CONSTRUCTION AREA SIGNS

NO SCALE

CS-1

STATE OF CALIFORNIA - DEPARTMENT OF TRANSPORTATION
Caltrans
DESIGN

FUNCTIONAL SUPERVISOR: S. WYATT
CALCULATED-DESIGNED BY: S. LOZON
CHECKED BY: M. O'NEAL
REVISED BY
DATE REVISED

LAST REVISION 08-05-10
DATE PLOTTED => 24-AUG-2010
TIME PLOTTED => 10:29

Dist	COUNTY	ROUTE	POST MILES TOTAL PROJECT	SHEET No.	TOTAL SHEETS
05	Mon	1	22.6/22.8	16	86

REGISTERED CIVIL ENGINEER 8-5-10 DATE

8-16-10
PLANS APPROVAL DATE

REGISTERED PROFESSIONAL ENGINEER S. LOZON No. 43136 Exp. 3-31-12 CIVIL STATE OF CALIFORNIA

THE STATE OF CALIFORNIA OR ITS OFFICERS OR AGENTS SHALL NOT BE RESPONSIBLE FOR THE ACCURACY OR COMPLETENESS OF SCANNED COPIES OF THIS PLAN SHEET.

NOTES:

1. SEE ELECTRICAL PLAN FOR TEMPORARY SIGNAL SYSTEM.
2. SIGN LOCATIONS SHOWN ARE APPROXIMATE. EXACT LOCATIONS TO BE DETERMINED BY THE ENGINEER.
3. MOUNT ON POST WITH R10-6 SIGN.
4. MOUNT ON TEMPORARY POLE/POST.
5. STAGE 1 TRAFFIC HANDLING SIGNS TO REMAIN IN PLACE FOR STAGE 2.

LEGEND

- CONSTRUCT THIS STAGE
- DIRECTION OF TRAVEL
- TEMPORARY PAVEMENT MARKING (TAPE) - LIMIT LINE (1' WHITE)
- TEMPORARY ALTERNATIVE CRASH CUSHION SYSTEM
- TEMPORARY RAILING (TYPE K)
- TYPE P MARKER
- TYPE III BARRICADE
- CHANNELIZER (SURFACE MOUNTED)
- PORTABLE DELINEATOR (DOUBLE BASE)
- Exist CHANNELIZER (FROM STAGE 1)
- FLASHING BEACON

STAGE 1

SALVAGE Exist Temp SIGNAL SYSTEM
PLACE Temp SIGNAL SYSTEM
PLACE Temp RAILING (TYPE K)
PLACE MBGR
CONSTRUCT WALL
CONSTRUCT SOUTHBOUND ROADBED

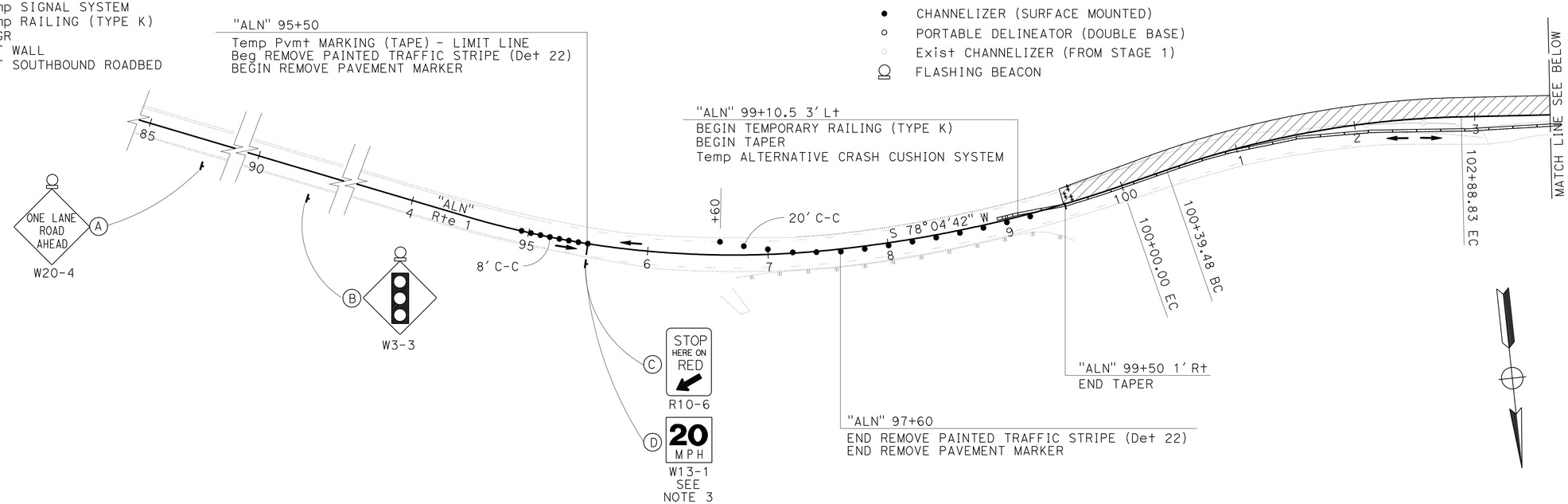

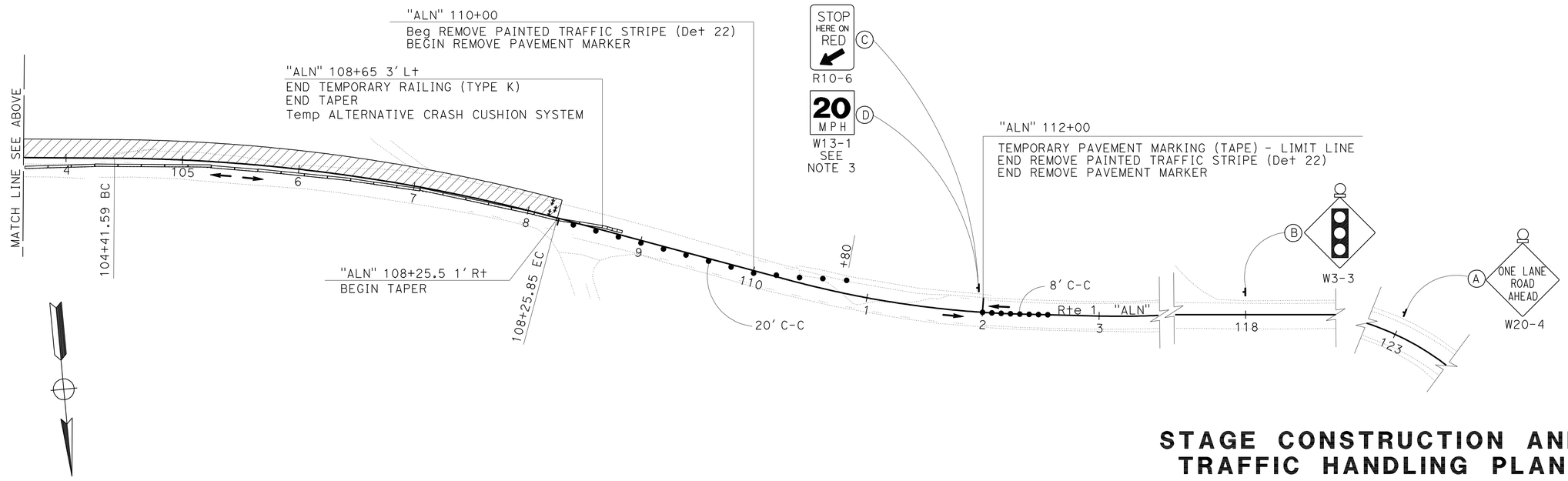

THIS PLAN ACCURATE FOR STAGE CONSTRUCTION AND TRAFFIC HANDLING WORK ONLY.

STAGE CONSTRUCTION AND TRAFFIC HANDLING PLAN
(STAGE 1)

SCALE: 1" = 50'

SC-1

STATE OF CALIFORNIA - DEPARTMENT OF TRANSPORTATION
Caltrans
DESIGN
FUNCTIONAL SUPERVISOR: S. WYATT
CALCULATED-DESIGNED BY: S. LOZON
CHECKED BY: M. O'NEAL
REVISED BY
DATE REVISED

LAST REVISION 08-05-10
DATE PLOTTED => 24-AUG-2010
TIME PLOTTED => 10:29

Dist	COUNTY	ROUTE	POST MILES TOTAL PROJECT	SHEET No.	TOTAL SHEETS
05	Mon	1	22.6/22.8	17	86

REGISTERED CIVIL ENGINEER 8-5-10 DATE

8-16-10
PLANS APPROVAL DATE

REGISTERED PROFESSIONAL ENGINEER S. LOZON No. 43136 Exp. 3-31-12 CIVIL STATE OF CALIFORNIA

THE STATE OF CALIFORNIA OR ITS OFFICERS OR AGENTS SHALL NOT BE RESPONSIBLE FOR THE ACCURACY OR COMPLETENESS OF SCANNED COPIES OF THIS PLAN SHEET.

STAGE 2

REMOVE Temp RAILING (TYPE K)
CONSTRUCT NORTHBOUND ROADBED

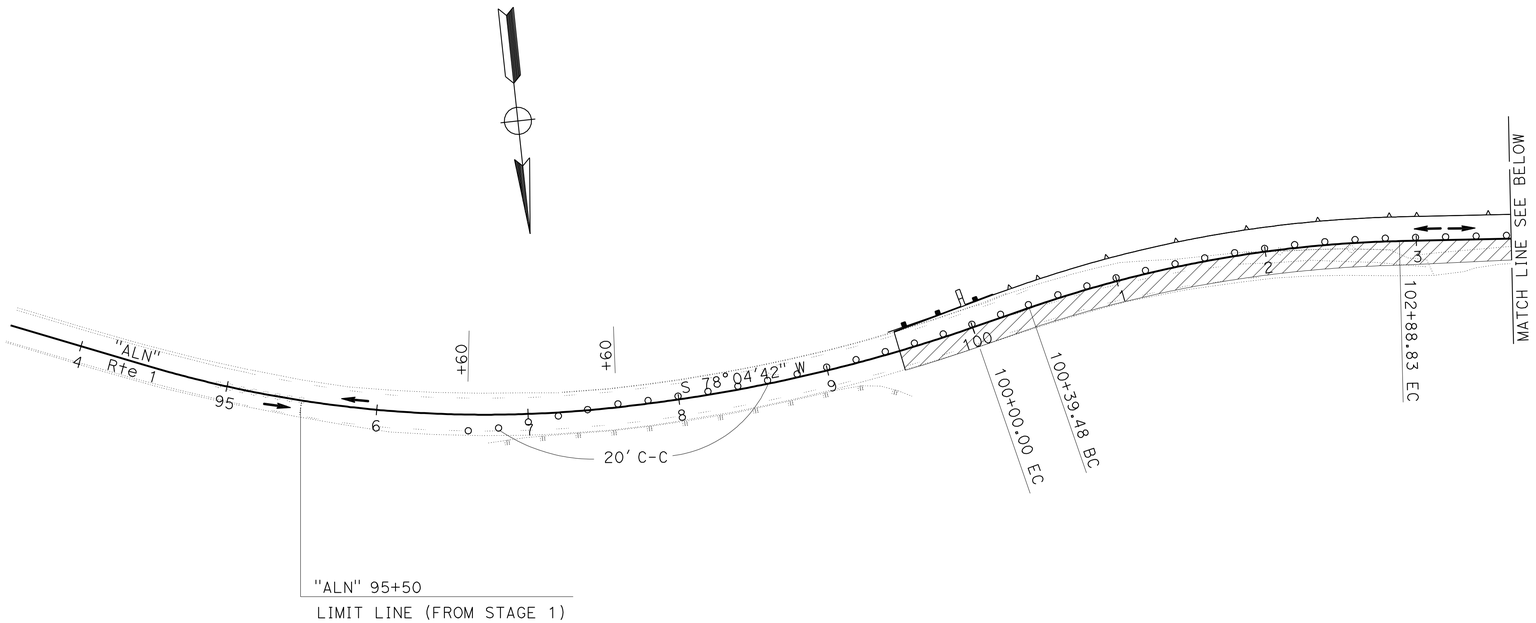

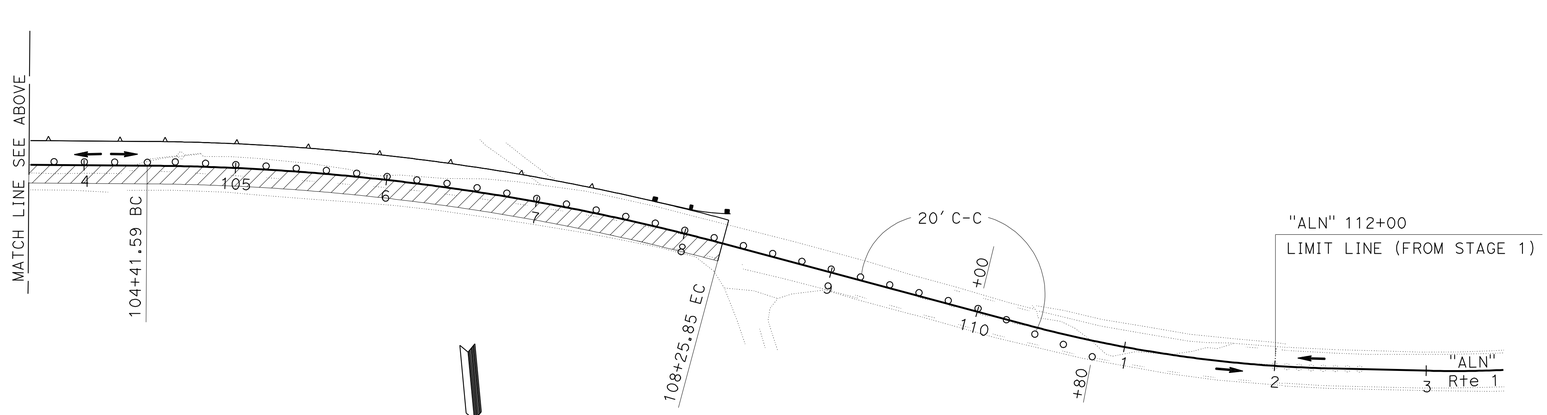

THIS PLAN ACCURATE FOR STAGE CONSTRUCTION AND TRAFFIC HANDLING WORK ONLY.

STAGE CONSTRUCTION AND TRAFFIC HANDLING PLAN
(STAGE 2)

SCALE: 1" = 50'

SC-2

STATE OF CALIFORNIA - DEPARTMENT OF TRANSPORTATION
Caltrans
DESIGN

FUNCTIONAL SUPERVISOR: S. WYATT
CALCULATED-DESIGNED BY: S. LOZON
CHECKED BY: M. O'NEAL
REVISED BY
DATE REVISED

LAST REVISION 08-05-10
DATE PLOTTED => 24-AUG-2010
TIME PLOTTED => 10:29

Dist	COUNTY	ROUTE	POST MILES TOTAL PROJECT	SHEET No.	TOTAL SHEETS
05	Mon	1	22.6/22.8	18	86

REGISTERED CIVIL ENGINEER 8-5-10 DATE

8-16-10
PLANS APPROVAL DATE

REGISTERED PROFESSIONAL ENGINEER S. LOZON No. 43136 Exp. 3-31-12 CIVIL STATE OF CALIFORNIA

THE STATE OF CALIFORNIA OR ITS OFFICERS OR AGENTS SHALL NOT BE RESPONSIBLE FOR THE ACCURACY OR COMPLETENESS OF SCANNED COPIES OF THIS PLAN SHEET.

TEMPORARY PAVEMENT DELINEATION

SHEET No.	LOCATION	TEMPORARY PAVEMENT MARKING (TAPE)
		LIMIT LINE
		SQFT
SC-1	"ALN" 95+50	12
SC-1	"ALN" 112+00	12
TOTAL		24

REMOVE PAVEMENT MARKERS AND STRIPING

SHEET No.	LOCATION	REMOVE PAVEMENT MARKER	REMOVE PAINTED TRAFFIC STRIPE
		TYPE D	DETAIL 22
		EA	LF
SC-1	"ALN" 95+50 TO 97+60	20	420
SC-1	"ALN" 110+00 TO 112+00	18	400
	TOTAL	38	820

TRAFFIC HANDLING DEVICES

SHEET No.	LOCATION	FLASHING BEACON (PORTABLE)	CHANNELIZER (SURFACE MOUNTED)	PORTABLE DELINEATOR	Temp ALTERNATIVE CRASH CUSHION SYSTEM	OBJECT MARKER (TYPE P)	TYPE III BARRICADE	Temp RAILING (TYPE K)
		EA						LF
SC-1	"ALN" 85+50 R+	1						
	"ALN" 90+50 R+	1						
	"ALN" 94+94 TO 112+56		43					
	"ALN" 99+10.5 L+				1			
	"ALN" 99+10.5 TO 108+65							960
	"ALN" 99+50					1	3	
	"ALN" 108+25.5					1	3	
	"ALN" 108+65 L+				1			
	"ALN" 118+00 L+	1						
	"ALN" 123+00 L+	1						
SC-2	"ALN" 96+60 TO 110+80			72				
	SUBTOTAL					* 2		
	TOTAL	4	43	72	2		6	960

* SEE SHEET PDQ-1 FOR TOTAL.

CONSTRUCTION AREA SIGNS (STATIONARY MOUNTED) TRAFFIC HANDLING

SIGN NO.	SIGN CODE (CA)	PANEL SIZE	NUMBER OF POST AND SIZE	SIGN MESSAGE	NUMBER OF SIGNS	REMARKS
A	W20-4	36" x 36"	1 - 4" x 6"	ONE LANE ROAD AHEAD	2	
B	W3-3	36" x 36"			2	MOUNT ON Temp POLE/POST (SEE Elect PLANS)
C	R10-6	24" x 36"	1 - 4" x 6"	STOP HERE ON RED	2	
D	W13-1	24" x 24"		20 MPH	2	MOUNT ON R10-6 SIGN POST

NOTE: ALL SIGN PANEL AND POST SIZES ARE IN INCHES.

STAGE CONSTRUCTION QUANTITIES

SCQ-1

REVISED BY | DATE REVISED
S. LOZON | M. O'NEAL
CALCULATED-DESIGNED BY | CHECKED BY
FUNCTIONAL SUPERVISOR: S. WYATT

STATE OF CALIFORNIA - DEPARTMENT OF TRANSPORTATION
Caltrans® DESIGN

LAST REVISION 08-05-10 | DATE PLOTTED => 24-AUG-2010 | TIME PLOTTED => 10:29

Dist	COUNTY	ROUTE	POST MILES TOTAL PROJECT	SHEET No.	TOTAL SHEETS
05	Mon	1	22.6/22.8	19	86

REGISTERED CIVIL ENGINEER 8-5-10 DATE

8-16-10
PLANS APPROVAL DATE

REGISTERED PROFESSIONAL ENGINEER
S. LOZON
No. 43136
Exp. 3-31-12
CIVIL
STATE OF CALIFORNIA

THE STATE OF CALIFORNIA OR ITS OFFICERS OR AGENTS SHALL NOT BE RESPONSIBLE FOR THE ACCURACY OR COMPLETENESS OF SCANNED COPIES OF THIS PLAN SHEET.

LEGEND

##	PAVEMENT DELINEATION DETAIL NUMBER
⊢	LIMIT OF STRIPING DETAIL
⊢► GDE	GUARD RAILING DELINEATOR (TYPE E) @ 20' SPACING C-C
⊢► OMP	OBJECT MARKER (TYPE P)

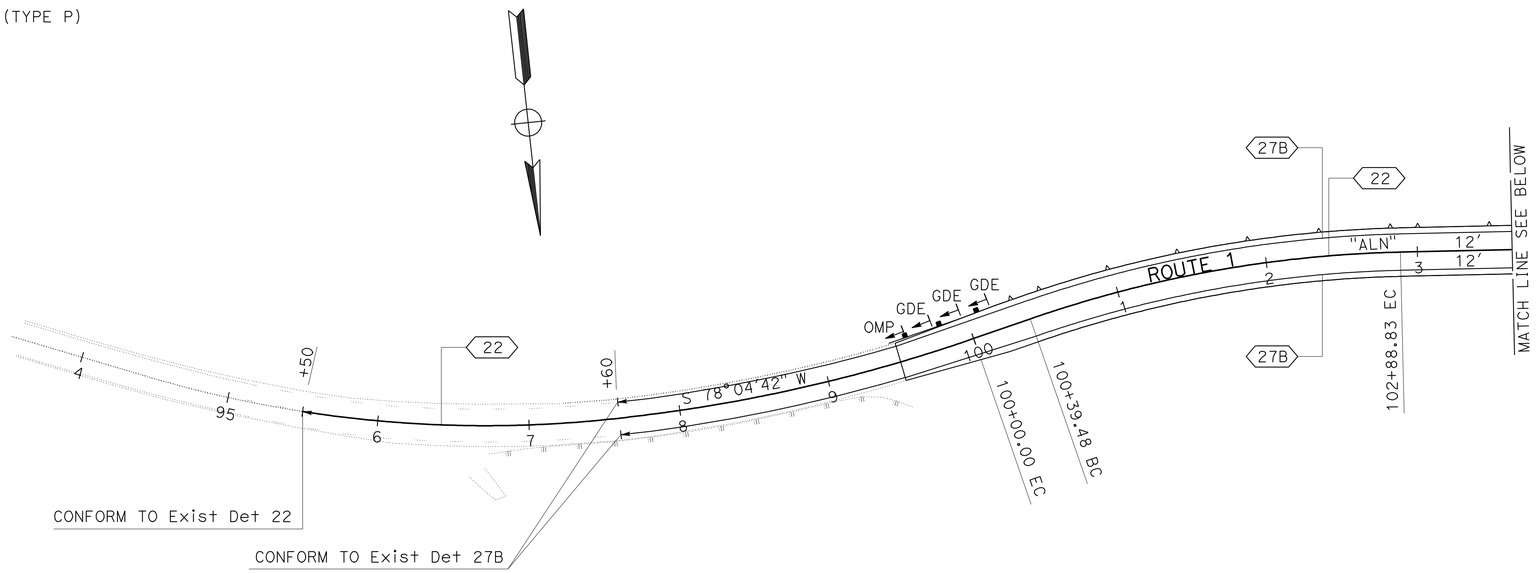

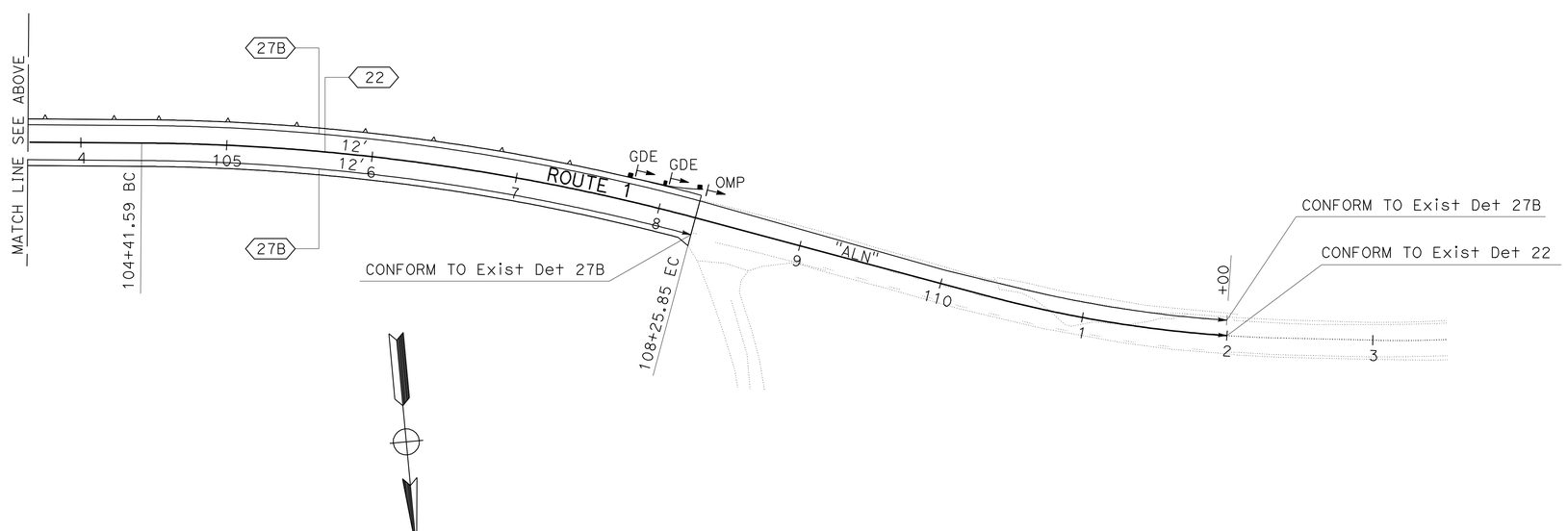

THIS PLAN ACCURATE FOR PAVEMENT DELINEATION ONLY.

PAVEMENT DELINEATION

SCALE: 1" = 50'

PD-1

STATE OF CALIFORNIA - DEPARTMENT OF TRANSPORTATION
Caltrans
DESIGN

FUNCTIONAL SUPERVISOR: S. WYATT
CALCULATED-DESIGNED BY: S. LOZON
CHECKED BY: M. O'NEAL
REVISED BY
DATE REVISED

LAST REVISION 08-05-10
DATE PLOTTED => 24-AUG-2010
TIME PLOTTED => 10:29

Dist	COUNTY	ROUTE	POST MILES TOTAL PROJECT	SHEET No.	TOTAL SHEETS
05	Mon	1	22.6/22.8	20	86

REGISTERED CIVIL ENGINEER 8-5-10 DATE

8-16-10
PLANS APPROVAL DATE

REGISTERED PROFESSIONAL ENGINEER S. LOZON No. 43136 Exp. 3-31-12 CIVIL STATE OF CALIFORNIA

THE STATE OF CALIFORNIA OR ITS OFFICERS OR AGENTS SHALL NOT BE RESPONSIBLE FOR THE ACCURACY OR COMPLETENESS OF SCANNED COPIES OF THIS PLAN SHEET.

DELINEATORS

SHEET No.	STATION LIMITS	GUARD RAILING DELINEATOR TYPE E EA	OBJECT MARKER (TYPE P) EA
PD-1	"ALN" 99+57.65		1
	"ALN" 99+76.73 TO 100+16.73	3	
	"ALN" 107+68.39 TO 108+08.39	2	
	"ALN" 108+25.95		1
	SUBTOTAL FROM SCQ-1		2
	TOTAL	5	4

PAVEMENT DELINEATION ITEMS

SHEET No.	STATION LIMITS	DETAIL No. OR PAVEMENT MARKING	THERMOPLASTIC TRAFFIC STRIPE 4" WHITE (LF)	THERMOPLASTIC TRAFFIC STRIPE 4" YELLOW (LF)	PAVEMENT MARKER (RETROREFLECTIVE) TYPE D EA
PD-1	"ALN" 95+50 TO 112+00	22		3,300	140
	"ALN" 97+60 TO 112+00 L†	27B	1,440		
	"ALN" 97+60 TO 108+25.85 R†	27B	1,065.9		
		SUBTOTAL	2,505.9	3,300	
		TOTAL	5,805.9		140

PAVEMENT DELINEATION QUANTITIES
PDQ-1

STATE OF CALIFORNIA - DEPARTMENT OF TRANSPORTATION
DESIGN
Caltrans

FUNCTIONAL SUPERVISOR: S. WYATT
CALCULATED-DESIGNED BY: S. LOZON
CHECKED BY: M. O'NEAL
REVISED BY
DATE REVISED

LAST REVISION 08-05-10
DATE PLOTTED => 24-AUG-2010
TIME PLOTTED => 10:29

Dist	COUNTY	ROUTE	POST MILES TOTAL PROJECT	SHEET No.	TOTAL SHEETS
05	Mon	1	22.6/22.8	21	86

REGISTERED CIVIL ENGINEER 8-5-10 DATE

8-16-10
PLANS APPROVAL DATE

REGISTERED PROFESSIONAL ENGINEER S. LOZON No. 43136 Exp. 3-31-12 CIVIL STATE OF CALIFORNIA

THE STATE OF CALIFORNIA OR ITS OFFICERS OR AGENTS SHALL NOT BE RESPONSIBLE FOR THE ACCURACY OR COMPLETENESS OF SCANNED COPIES OF THIS PLAN SHEET.

NOTE:

EXACT LOCATION OF TEMPORARY BMPS WILL BE DETERMINED BY THE ENGINEER.

ROADWORK

SHEET No.	LOCATION	COLD PLANE AC Pvmt	CI 2 AB	HOT MIX ASPHALT (TYPE B)	TACK COAT	PLACE HMA DIKE (TYPE C)	PLACE HMA DIKE (TYPE F)
		SQYD	CY	TON		LF	
L-1	"ALN" 99+34.38 TO 99+49.38	42.8					
	"ALN" 99+45.85 TO 100+00.5			0.19		54.7	
	"ALN" 99+34.38 TO 109+00			1,094.9	1.5		
	"ALN" 99+49.38 TO 108+25.85		603.5				
	"ALN" 100+04.7 Lt (OVERSIDE DRAIN)			0.15			
	"ALN" 100+08.3 TO 100+20.90			0.13			12.6
	"ALN" 108+25.85 TO 109+00	336.2					
TOTAL		379	603.5	1,095.4	1.5	54.7	12.6

TEMPORARY WATER POLLUTION CONTROL

LOCATION	Temp Const ENTRANCE
	EA
"ALN" 99+49.38 TO 108+25.85	1

EARTHWORK

SHEET No.	LOCATION	ROADWAY EXCAVATION	EMBANKMENT (N)	WETLAND SOIL
		CY		
L-1	"ALN" 99+49.38 TO 108+25.85	3,500	3,500	
	"ALN" 105+75 TO 108+25.85			28

(N) NOT A SEPARATE PAY ITEM, FOR INFORMATION ONLY.

OVERSIDE DRAIN

SHEET No.	LOCATION	PLACE HMA (Misc AREA)	RSP FABRIC	RSP (FACING, METHOD B)
		SQYD		CY
L-1	"ALN" 100+04.7	3	7	2

TEMPORARY FENCE (TYPE ESA)

LOCATION	LF
"ALN" 97+50 TO 100+20 Lt	290
"ALN" 108+50 TO 110+00 Lt	205
TOTAL	495

METAL BEAM GUARD RAIL

SHEET No.	LOCATION	Alt IN-LINE TERMINAL SYSTEM	Alt FLARED TERMINAL SYSTEM	Trans RAILING (TYPE WB)
		EA		
L-1	"ALN" 99+45.85 TO 99+95.85	1		
	"ALN" 99+95.85 TO 100+20.90			1
	"ALN" 107+64.22 TO 107+88.97			1
	"ALN" 107+88.97 TO 108+25.95		1	
TOTAL		1	1	2

ADJUST FRAME AND COVER TO GRADE

SHEET No.	LOCATION	ADJUST FRAME AND COVER TO GRADE
		EA
L-1	"ALN" 101+14.64 Lt	1
	"ALN" 103+58.87 Rt	1
	"ALN" 105+01.06 Lt	1
	"ALN" 106+54.12 Lt	1
	"ALN" 107+95.63 Rt	1
TOTAL		5

EROSION CONTROL

LOCATION	FIBER ROLL	EROSION CONTROL (COMPOST BLANKET)	(N) SEED
	LF	CY	LB
"ALN" 99+00 TO 109+05 Lt	2,000	284	95.2

(N) - NOT A SEPARATE PAY ITEM, FOR INFORMATION ONLY.

SUMMARY OF QUANTITIES
Q-1

REVISED BY | DATE REVISED
S. LOZON | M. O'NEAL
CALCULATED-DESIGNED BY | CHECKED BY
FUNCTIONAL SUPERVISOR: S. WYATT
STATE OF CALIFORNIA - DEPARTMENT OF TRANSPORTATION
Caltrans® DESIGN

LAST REVISION 08-05-10 | DATE PLOTTED => 24-AUG-2010 TIME PLOTTED => 10:29

Dist	COUNTY	ROUTE	POST MILES TOTAL PROJECT	SHEET No.	TOTAL SHEETS
05	Mon	1	22.6/22.8	22	86

LICENSED LANDSCAPE ARCHITECT

8-16-10
PLANS APPROVAL DATE

LICENSED LANDSCAPE ARCHITECT — Bryan D. Parker No. 3088 — Signature — 12-31-11 Renewal Date — 8-5-10 Date — STATE OF CALIFORNIA

THE STATE OF CALIFORNIA OR ITS OFFICERS OR AGENTS SHALL NOT BE RESPONSIBLE FOR THE ACCURACY OR COMPLETENESS OF SCANNED COPIES OF THIS PLAN SHEET.

NOTE:

FOR ACCURATE RIGHT OF WAY AND ACCESS DATA, CONTACT RIGHT OF WAY ENGINEERING AT THE DISTRICT OFFICE.

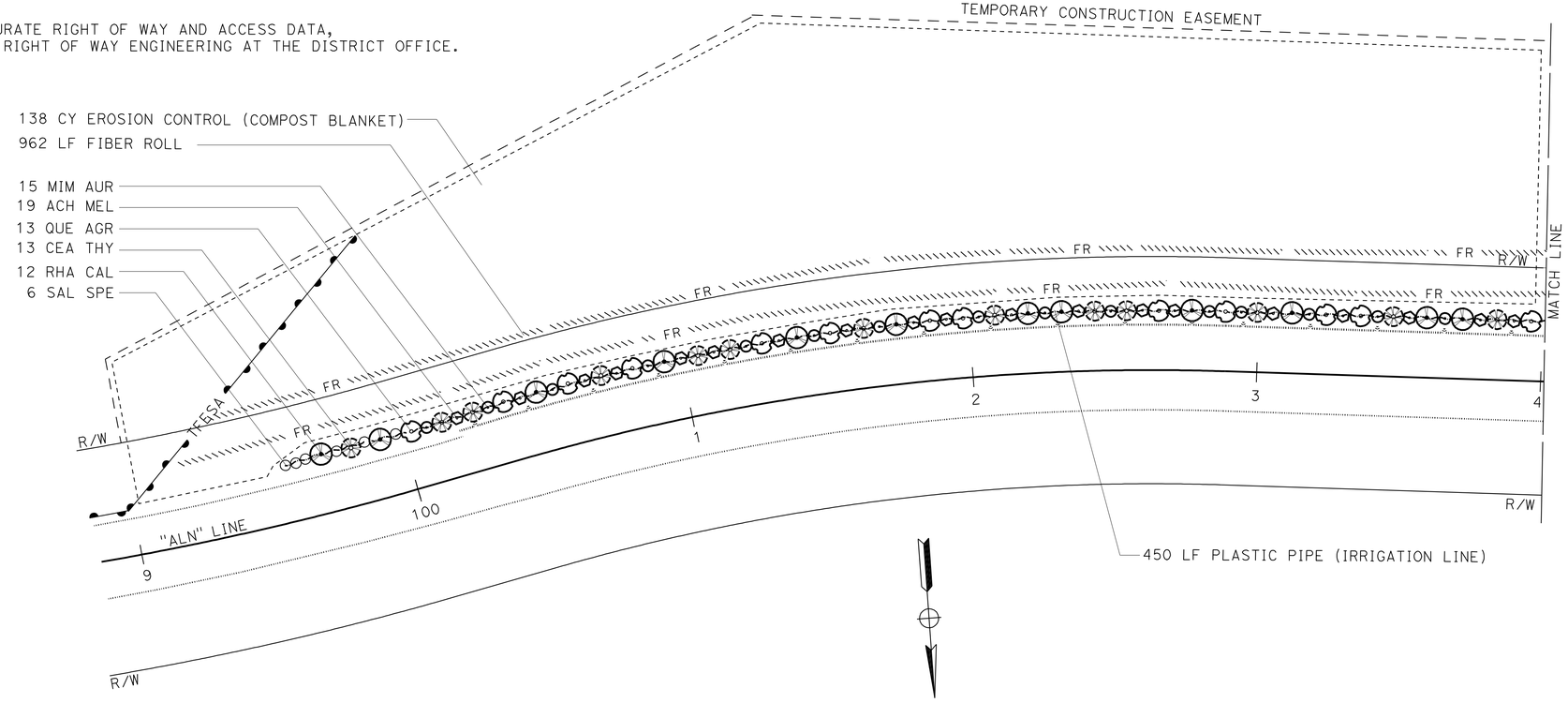

LEGEND

- TFESA — TEMPORARY FENCE (TYPE ESA)
- FR — FIBER ROLL
- 1" PLASTIC PIPE (SUPPLY LINE) (SCH 40)
- ¾" PLASTIC PIPE (IRRIGATION LINE)
- EROSION CONTROL (COMPOST BLANKET) 1" THICKNESS

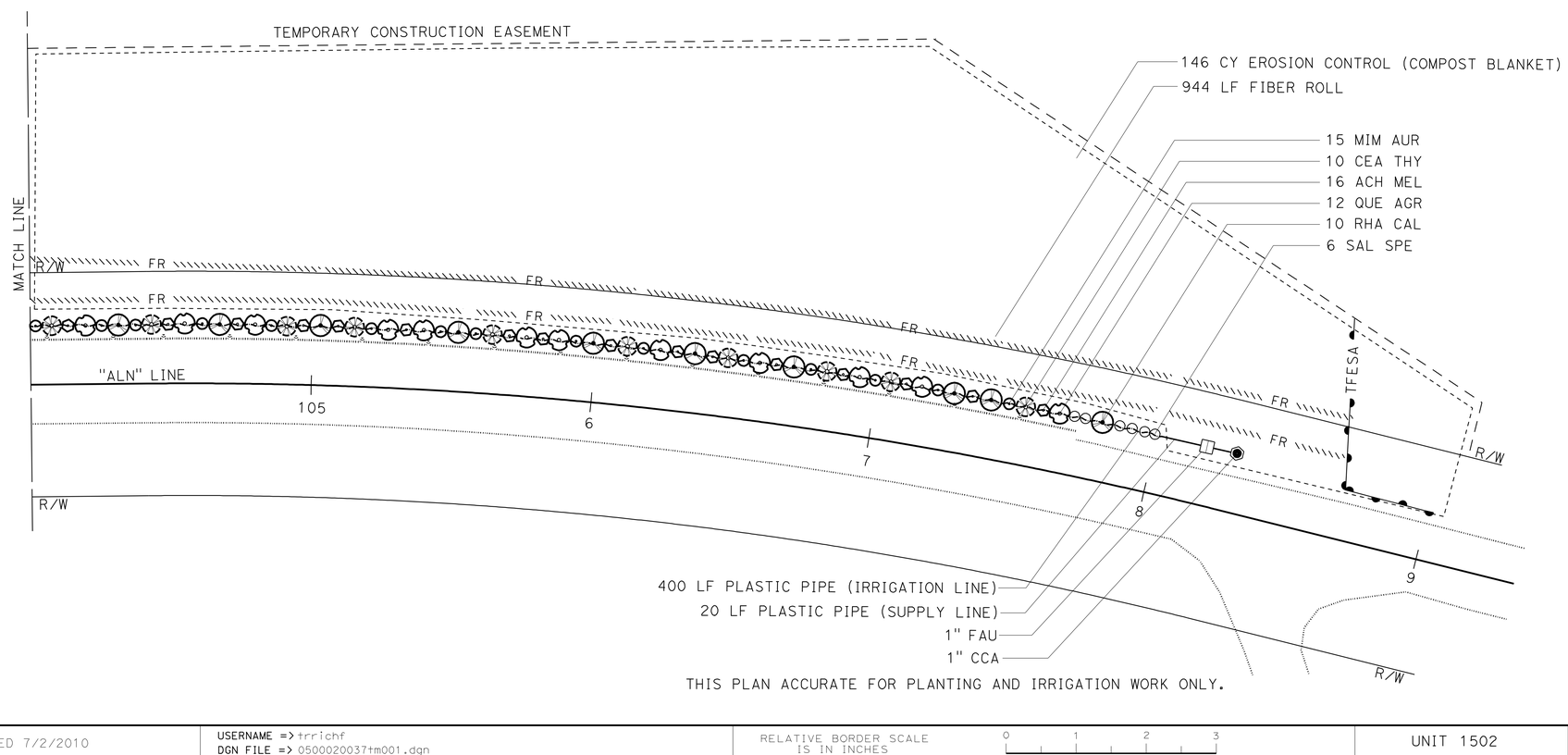

THIS PLAN ACCURATE FOR PLANTING AND IRRIGATION WORK ONLY.

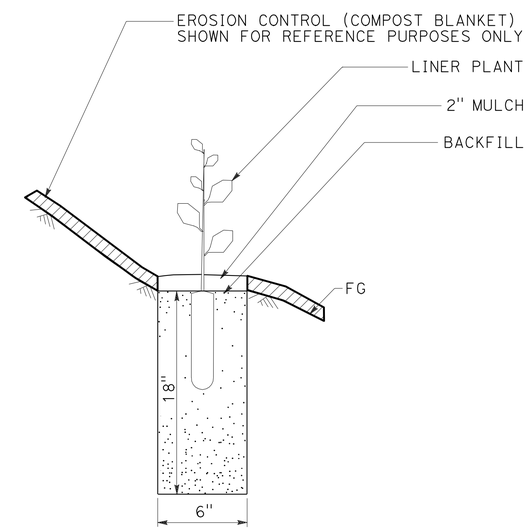

SECTION

PLANT (GROUP M)

PLANTING AND IRRIGATION PLAN AND DETAILS

NO SCALE

PI-1

STATE OF CALIFORNIA - DEPARTMENT OF TRANSPORTATION
Caltrans® LANDSCAPE ARCHITECTURE

SENIOR LANDSCAPE ARCHITECT: DENNIS REEVES
CALCULATED-DESIGNED BY: BRYAN PARKER
CHECKED BY: CORBY KILMER
REVISED BY / DATE REVISED

LAST REVISION 08-05-10
DATE PLOTTED => 24-AUG-2010
TIME PLOTTED => 10:29

Dist	COUNTY	ROUTE	POST MILES TOTAL PROJECT	SHEET No.	TOTAL SHEETS
05	Mon	1	22.6/22.8	23	86

LICENSED LANDSCAPE ARCHITECT

8-16-10
PLANS APPROVAL DATE

LICENSED LANDSCAPE ARCHITECT — Bryan D. Parker No. 3886 — Signature — 12-31-11 Renewal Date — 8-5-10 Date — STATE OF CALIFORNIA

THE STATE OF CALIFORNIA OR ITS OFFICERS OR AGENTS SHALL NOT BE RESPONSIBLE FOR THE ACCURACY OR COMPLETENESS OF SCANNED COPIES OF THIS PLAN SHEET.

APPLICABLE WHEN CIRCLED:

1 - Quantities shown are "per plant" unless shown as SQFT or SQYD application rates.
2 - Sufficient to receive root ball.
3 - Does not apply to mulch areas.
4 - As shown on plans.
5 - See Special Provisions for container dimensions.
6 - See detail.
7 - See Special Provisions.

NOTE:
Underlined portions of botanical name indicate abbreviations used on Planting Plans.

PLANT LIST AND PLANTING SPECIFICATIONS

PLANT GROUP	PLANT No.	SYMBOL	BOTANICAL NAME	COMMON NAME	SIZE	QUANTITY EACH	HOLE SIZE (INCH) Dia	HOLE SIZE (INCH) DEPTH	BASIN TYPE	IRON SULFATE	SOIL AMEND 1	COMMERCIAL FERTILIZER 1 PLANTING	COMMERCIAL FERTILIZER 1 PLT ESTB	MULCH 1	STAKING	PLANTING LIMITS MINIMUM DISTANCE (Ft) FROM TRVD WAY	PVMT	FENCE	WALL	PAVED DITCH	EARTH DITCH	ON CENTER (Ft)	REMARKS
A	1		CEANOTHUS THYRSIFLORUS	BLUEBLOSSOM	NO. 1	23	12	12	II	-	0.6 CF	2 Pkt	-	1 CF	-	-	-	-	8	-	-	4	
	2		QUERCUS AGRIFOLIA	COAST LIVE OAK	NO. 1	25	12	12	II	-	0.6 CF	2 Pkt	-	1 CF	-	-	-	-	8	-	-	4	
	3		RHAMNUS CALIFORNICA	COFFEEBERRY	NO. 1	22	12	12	II	-	0.6 CF	2 Pkt	-	1 CF	-	-	-	-	8	-	-	4	
M	4		MIMULUS AURANTIACUS	STICKY MONKEYFLOWER	LINER	30	6		-	-	0.2 CF	1 Pkt	-	6	-	-	-	-	-	-	-	4	5
	5		ACHILLEA MILLEFOLIUM	YARROW	LINER	35	6		-	-	0.2 CF	1 Pkt	-	6	-	-	-	-	-	-	-	4	5
W	6		SALIX SPECIES	WILLOW	CUTTING	12	7		-	-	-	-	-	0.5 CF	-	-	-	-	-	-	-	4	

SPRINKLER SCHEDULE

SYMBOL	TYPE	DESCRIPTION	SPRAY PATTERN	OPERATING PRESSURE (PSI)	PRESSURE COMPENSATING	PLUS/MINUS 5% 1 DISCHARGE GALLONS PER MINUTE (GPM)	DISCHARGE GALLONS PER HOUR (GPH)	RADIUS (Ft)	WIDTH x LENGTH (Ft)	MATERIAL	INLET CONNECTION (NPT INCH)	POSITIVE-LOCKING ADJ ARC STOP	BACKSPLASH PREVENTER	DIFFUSER PIN	DISTANCE CONTROL FLAP	ADJ DISCHARGE	RISER TYPE	RISER MATERIAL PLASTIC	RISER MATERIAL GALVANIZED	RISER SIZE (IPS INCH)	RISER HEIGHT (INCH)	RISER FLOW SHUTOFF DEVICE	SWING JOINT (TYPE)	RISER SUPPORT	SPRINKLER PROTECTOR (TYPE)	REMARKS
	D-3	EMITTER	-	20	X	-	1.0	-	-	PL	-	-	-	-	-	-	-	-	-	-	-	-	-	-	-	2 3

APPLICABLE WHEN CIRCLED BELOW:

1 - If a pressure compensating device is specified, the discharge shown reflects its use.
2 - One emitter per Plant (Group M) and (Group W); Two emitters per Plant (Group A).
3 - Install emitter on uphill side of plant.

X IN BOX DENOTES REQUIREMENT

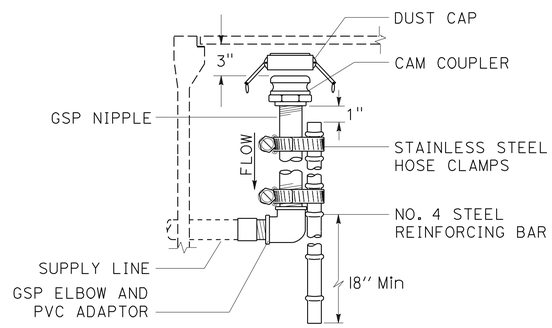

SECTION
CAM COUPLER ASSEMBLY

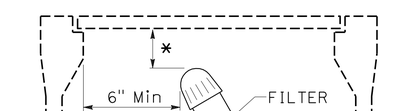

*-2" CLEARANCE, Min

SECTION
FILTER ASSEMBLY UNIT

LANDSCAPE DETAILS
LD-1

REVISED BY | DATE REVISED
BRYAN PARKER | CORBY KILMER
CALCULATED-DESIGNED BY | CHECKED BY
SENIOR LANDSCAPE ARCHITECT | DENNIS REEVES
STATE OF CALIFORNIA - DEPARTMENT OF TRANSPORTATION
Caltrans LANDSCAPE ARCHITECTURE

LAST REVISION 08-05-10 | DATE PLOTTED => 24-AUG-2010 | TIME PLOTTED => 10:29

Dist	COUNTY	ROUTE	POST MILES TOTAL PROJECT	SHEET No.	TOTAL SHEETS
05	Mon	1	22.6/22.8	24	86

REGISTERED ELECTRICAL ENGINEER 8-5-10 DATE

8-16-10
PLANS APPROVAL DATE

REGISTERED PROFESSIONAL ENGINEER XAVIER I. ALFARO No. E17488 Exp. 6-30-11 ELECTRICAL STATE OF CALIFORNIA

THE STATE OF CALIFORNIA OR ITS OFFICERS OR AGENTS SHALL NOT BE RESPONSIBLE FOR THE ACCURACY OR COMPLETENESS OF SCANNED COPIES OF THIS PLAN SHEET.

NOTES: (FOR THIS SHEET ONLY)

1. 35′ WOOD POLE WITH FLASHING BEACON, FBCA, AND SIGN LIGHTING. SEE DETAIL A ON SHEET E-2. INSTALL W3-3 SIGN (SEE SIGN SHEET FOR DETAILS).
2. 35′ WOOD POLE, SEE DETAIL D ON SHEET E-2.
3. SIZE OF FUEL TANK SHALL BE DETERMINED BY THE CONTRACTOR AND APPROVED BY THE ENGINEER. LOCATION OF TANK WILL BE DETERMINED BY THE ENGINEER.
4. POWER SHALL BE PROVIDED BY GENERATOR WITH A BACKUP GENERATOR, SEE DETAIL E ON SHEET E-3.
5. 120/240 V, 1ø 3-WIRE SERVICE ON 35′ WOOD POLE SEE DETAIL C ON SHEET E-2 AND WIRING DIAGRAM F ON SHEET E-3.
6. STATE-FURNISHED MODEL 2070 CONTROLLER ASSEMBLY AND BATTERY BACKUP SYSTEM.
7. 35′ WOOD POLE WITH SIGN LIGHTING. SEE DETAIL B ON SHEET E-2.
8. 40′ WOOD POLE WITH SIGNAL EQUIPMENT AND LIGHTING. SEE DETAIL G ON SHEET E-3.
9. 35′ WOOD POLE WITH SIGNAL EQUIPMENT. SEE DETAIL H ON SHEET E-3.
10. THE OVERHEAD CONDUCTORS SHALL BE TIED TO MESSENGER WIRE AT 3′ Max INTERVALS WITH SELF-CLINCHING NYLON TIES.
11. ALL PULL BOXES SHALL BE No. 3½ UNLESS OTHERWISE NOTED.
12. THE OVERHEAD MESSENGER WIRE SHALL BE ⅝", 7 STRAND GALVANIZED.
13. ø4 INDUCTIVE LOOP DETECTORS SHALL HAVE 5 TURNS.
14. FOR ACCURATE RIGHT OF WAY AND ACCESS DATA, CONTACT RIGHT OF WAY ENGINEERING AT THE DISTRICT OFFICE.
15. REUSE EXISTING WOOD POLES AND PULL BOXES FROM SHEET E-4 AS NEEDED.
16. SECURE SURFACE MOUNTED CONDUIT TO EMBANKMENT AT 10′ MAXIMUM INTERVALS AS DIRECTED BY THE ENGINEER.
17. FOR LOOP DETECTOR SPLICING SEE DETAIL A.

LEGEND:

- (G) GENERATORS AND TRANSFER SWITCH
- FUEL FUEL TANK
- —×——×— TEMPORARY CL-6 FENCE WITH GATE
- ——F—— FUEL LINE

ABBREVIATIONS:

AT&T AMERICAN TELEPHONE AND TELEGRAPH

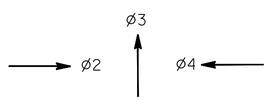

PHASE DIAGRAM
STEADY DEMAND SEQUENCE

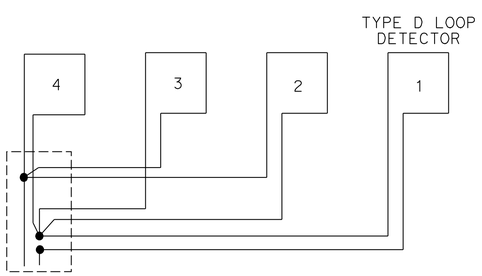

TYPICAL LOOP CONNECTIONS
(Dashed lines represent the pull box)

DETAIL A

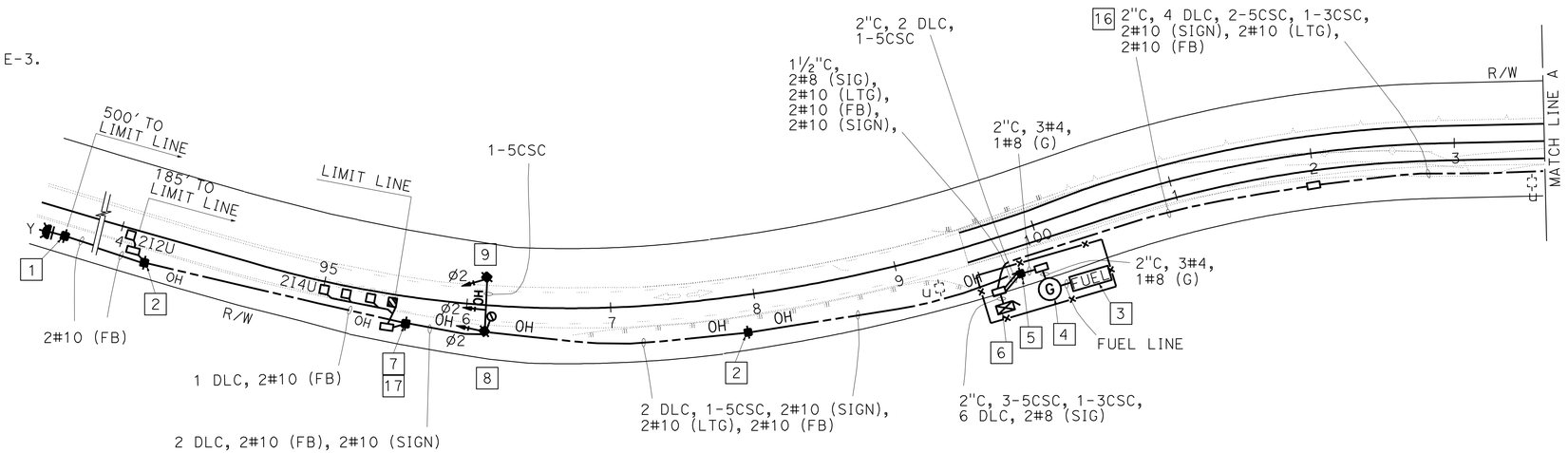

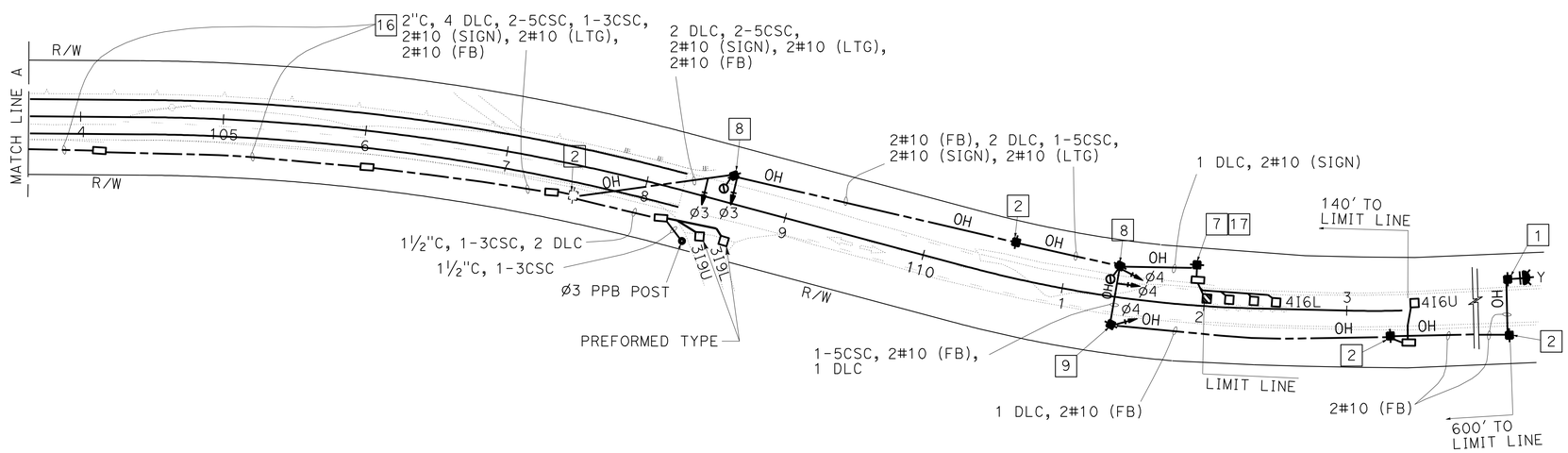

THIS PLAN IS ACCURATE FOR ELECTRICAL WORK ONLY.

TEMPORARY SIGNAL SYSTEM

SCALE: 1" = 50′

E-1

XAVIER ALFARO | PAUL MATOS | ALI BAKHDOUD | REVISED BY | DATE REVISED | CALCULATED-DESIGNED BY | CHECKED BY | FUNCTIONAL SUPERVISOR

STATE OF CALIFORNIA - DEPARTMENT OF TRANSPORTATION
Caltrans® **ELECTRICAL DESIGN**

LAST REVISION 08-05-10 | DATE PLOTTED => 24-AUG-2010 | TIME PLOTTED => 10:30

Dist	COUNTY	ROUTE	POST MILES TOTAL PROJECT	SHEET No.	TOTAL SHEETS
05	Mon	1	22.6/22.8	25	86

Xavier Alfaro 8-5-10
REGISTERED ELECTRICAL ENGINEER DATE

8-16-10
PLANS APPROVAL DATE

REGISTERED PROFESSIONAL ENGINEER XAVIER I. ALFARO No. E17488 Exp. 6-30-11 ELECTRICAL STATE OF CALIFORNIA

THE STATE OF CALIFORNIA OR ITS OFFICERS OR AGENTS SHALL NOT BE RESPONSIBLE FOR THE ACCURACY OR COMPLETENESS OF SCANNED COPIES OF THIS PLAN SHEET.

NOTE:

1. SCREW OR CONE TYPE ANCHORS ARE TO BE PLACE IN THE APPROPRIATE DIRECTION IN ORDER TO COUNTER BALANCE THE WEIGHT OF THE WOOD POLES.

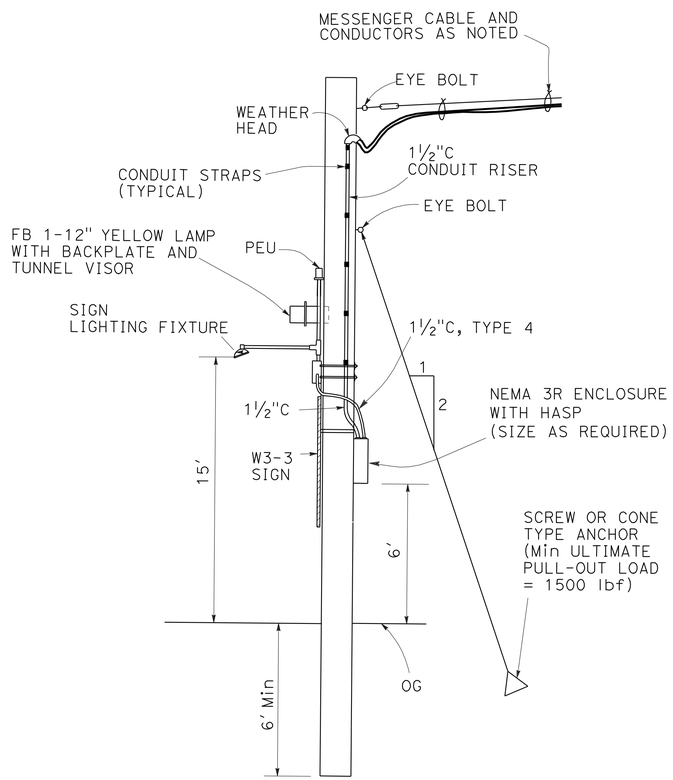

DETAIL A
TEMPORARY FLASHING BEACON INSTALLED ON 35' WOOD POLE

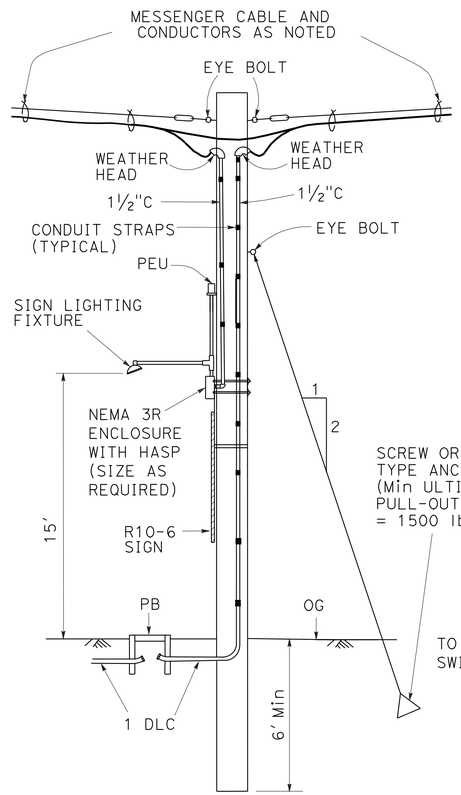

DETAIL B
TEMPORARY SIGN LIGHTING INSTALLED ON 35' WOOD POLE

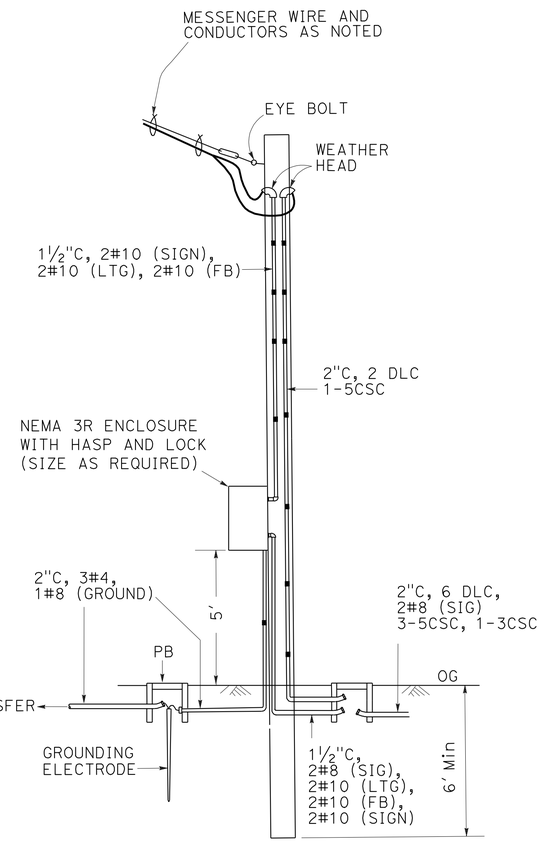

DETAIL C
TEMPORARY SERVICE ON 35' WOOD POLE

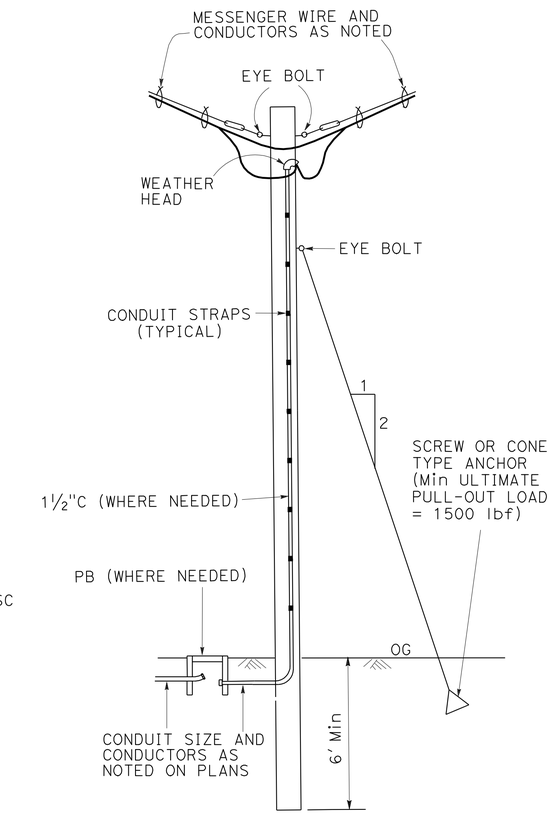

DETAIL D
TEMPORARY 35' WOOD POLE INSTALLATION

THIS PLAN IS ACCURATE FOR ELECRICAL WORK ONLY.

TEMPORARY SIGNAL SYSTEM

NO SCALE

E-2

STATE OF CALIFORNIA - DEPARTMENT OF TRANSPORTATION
Caltrans® ELECTRICAL DESIGN

FUNCTIONAL SUPERVISOR: ALI BAKHDOUD
CALCULATED-DESIGNED BY: XAVIER ALFARO
CHECKED BY: PAUL MATOS
REVISED BY
DATE REVISED

LAST REVISION 08-05-10
DATE PLOTTED => 24-AUG-2010
TIME PLOTTED => 10:30

Dist	COUNTY	ROUTE	POST MILES TOTAL PROJECT	SHEET No.	TOTAL SHEETS
05	Mon	1	22.6/22.8	26	86

Xavier Alfaro 8-5-10
REGISTERED ELECTRICAL ENGINEER DATE

8-16-10
PLANS APPROVAL DATE

REGISTERED PROFESSIONAL ENGINEER XAVIER I. ALFARO No. E17488 Exp. 6-30-11 ELECTRICAL STATE OF CALIFORNIA

THE STATE OF CALIFORNIA OR ITS OFFICERS OR AGENTS SHALL NOT BE RESPONSIBLE FOR THE ACCURACY OR COMPLETENESS OF SCANNED COPIES OF THIS PLAN SHEET.

NOTE:

1. SCREW OR CONE TYPE ANCHORS ARE TO BE PLACE IN THE APPROPRIATE DIRECTION IN ORDER TO COUNTER BALANCE THE WEIGHT OF THE WOOD POLES.

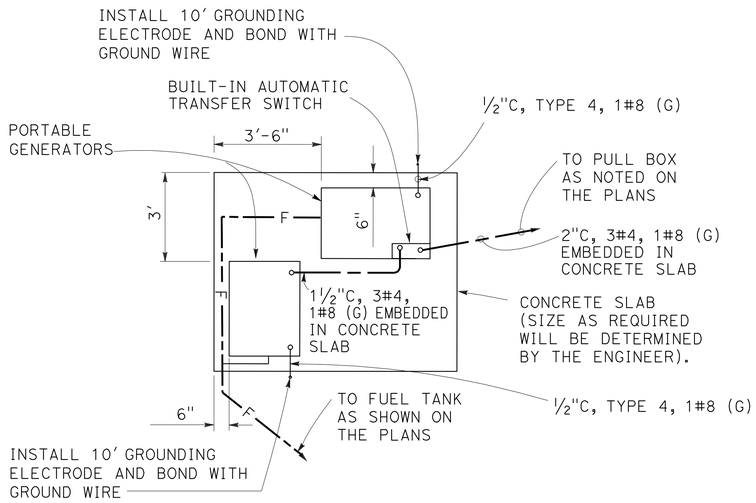

DETAIL E
INSTALL CONDUIT RUNS AS DIRECTED BY ENGINEER

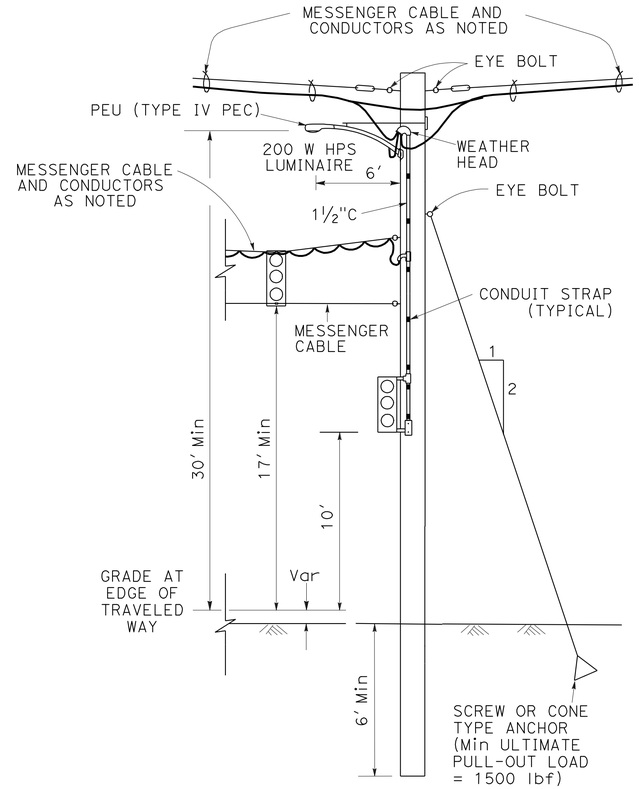

DETAIL G
TEMPORARY SIGNAL AND LIGHTING INSTALLED ON 40' WOOD POLE

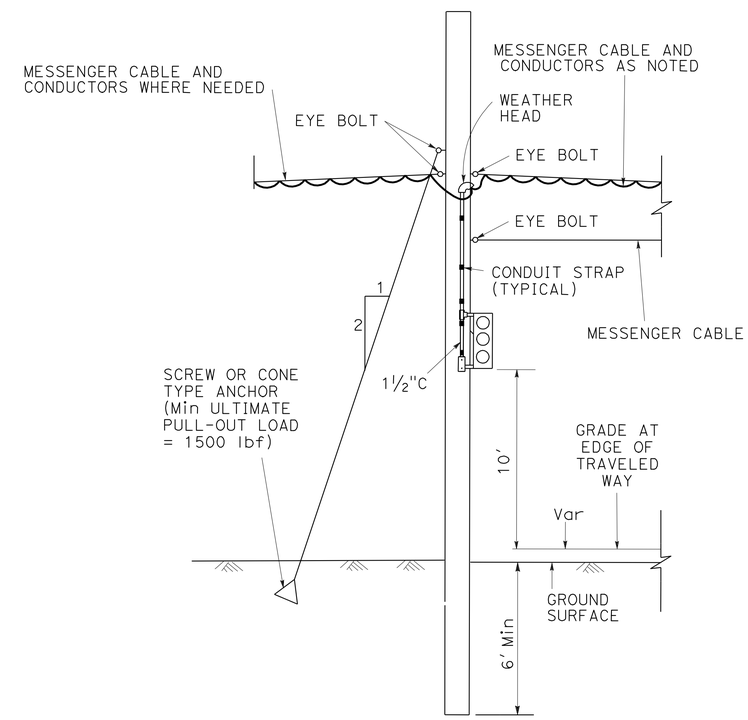

DETAIL H
TEMPORARY SIGNAL INSTALLED ON 35' WOOD POLE

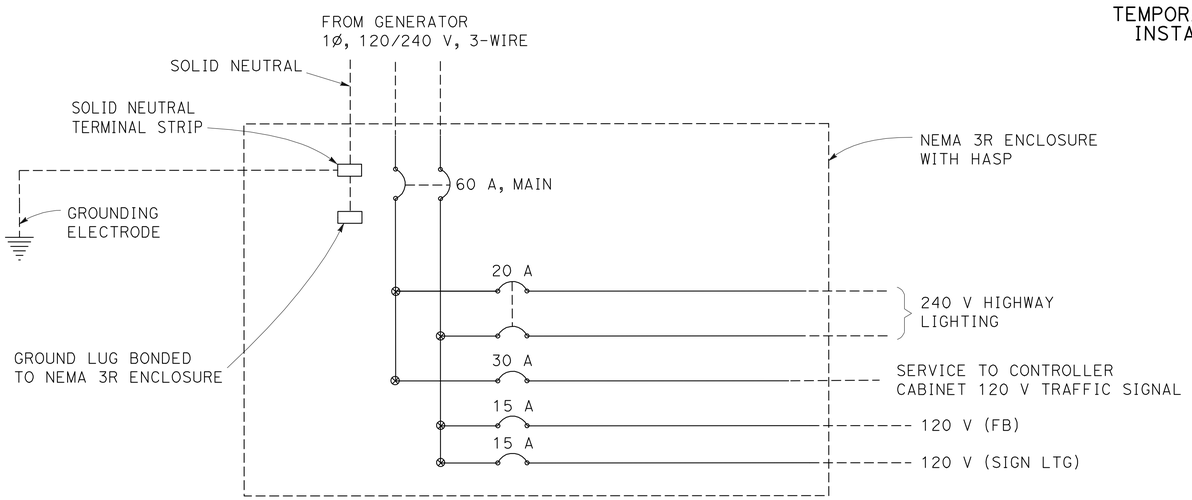

WIRING DIAGRAM F
SEE REVISED STANDARD PLANS ES-2C FOR DETAILS NOT SHOWN

THIS PLAN IS ACCURATE FOR ELECRICAL WORK ONLY.

TEMPORARY SIGNAL SYSTEM
NO SCALE
E-3

STATE OF CALIFORNIA - DEPARTMENT OF TRANSPORTATION
Caltrans® ELECTRICAL DESIGN

FUNCTIONAL SUPERVISOR: ALI BAKHDOUD
CALCULATED-DESIGNED BY: XAVIER ALFARO
CHECKED BY: PAUL MATOS
REVISED BY
DATE REVISED

LAST REVISION 08-05-10 | DATE PLOTTED => 24-AUG-2010 | TIME PLOTTED => 10:30

Dist	COUNTY	ROUTE	POST MILES TOTAL PROJECT	SHEET No.	TOTAL SHEETS
05	Mon	1	22.6/22.8	27	86

Xavier Alfaro 8-5-10
REGISTERED ELECTRICAL ENGINEER DATE

8-16-10
PLANS APPROVAL DATE

REGISTERED PROFESSIONAL ENGINEER XAVIER I. ALFARO No. E17488 Exp. 6-30-11 ELECTRICAL STATE OF CALIFORNIA

THE STATE OF CALIFORNIA OR ITS OFFICERS OR AGENTS SHALL NOT BE RESPONSIBLE FOR THE ACCURACY OR COMPLETENESS OF SCANNED COPIES OF THIS PLAN SHEET.

NOTES: (FOR THIS SHEET ONLY)

1. RS Exist STORAGE CONTAINER, ASSOCIATED TRAFFIC SIGNAL EQUIPMENT AND LIQUID PROPANE TANK.
2. RS Exist sig AND ltg EQUIPMENT. REUSE WOOD POLE AS NEEDED.
3. RS sig EQUIPMENT. REUSE WOOD POLE AS NEEDED.
4. RS fb EQUIPMENT. REUSE WOOD POLE AS NEEDED.
5. RS Exist SIGN ltg FIXTURE. REUSE WOOD POLE AS NEEDED.
6. REUSE Exist PB AS NEEDED.
7. AB Exist LOOP DETECTORS.
8. FOR ACCURATE RIGHT OF WAY AND ACCESS DATA, CONTACT RIGHT OF WAY ENGINEERING AT THE DISTRICT OFFICE.

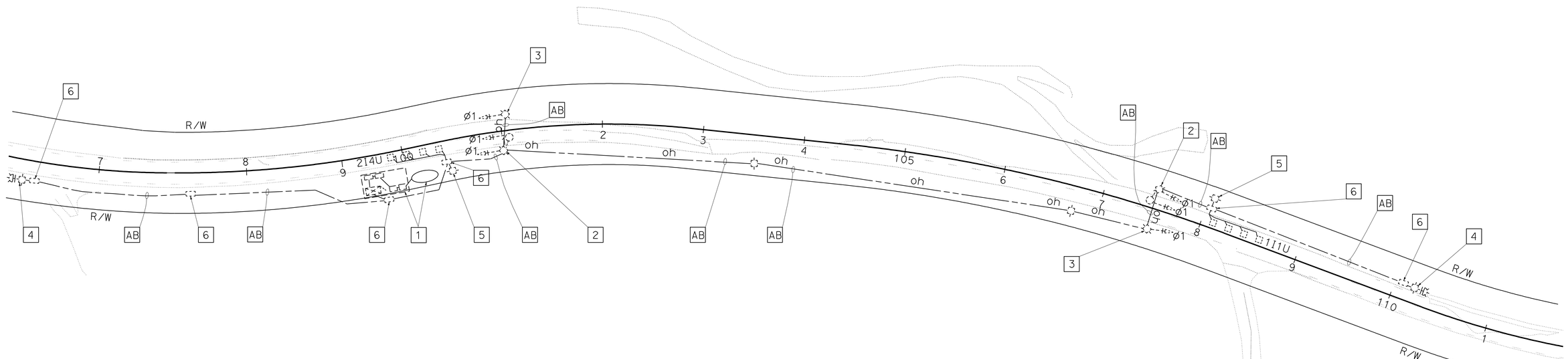

THIS PLAN IS ACCURATE FOR ELECRICAL WORK ONLY.

SALVAGE EXISTING TEMPORARY SIGNAL SYSTEM

SCALE: 1" = 50'

E-4

STATE OF CALIFORNIA - DEPARTMENT OF TRANSPORTATION
Caltrans® ELECTRICAL DESIGN

FUNCTIONAL SUPERVISOR: ALI BAKHDOUD
CALCULATED-DESIGNED BY: XAVIER ALFARO
CHECKED BY: PAUL MATOS
REVISED BY
DATE REVISED

LAST REVISION 08-05-10
DATE PLOTTED => 24-AUG-2010
TIME PLOTTED => 10:30

DIST	COUNTY	ROUTE	POST MILES TOTAL PROJECT	SHEET NO.	TOTAL SHEETS
05	Mon	1	22.6/22.8	28	86

Randell D. Hiatt
REGISTERED CIVIL ENGINEER

June 6, 2008
PLANS APPROVAL DATE

REGISTERED PROFESSIONAL ENGINEER
Randell D. Hiatt
No. C50200
Exp. 6-30-09
CIVIL
STATE OF CALIFORNIA

The State of California or its officers or agents shall not be responsible for the accuracy or completeness of electronic copies of this plan sheet.

To accompany plans dated 8-16-10

NOTES:

1. When necessary to place dike in front of face of guard railing, only Type C dike may be used. For dike details, see Standard Plan A87B.
2. For standard railing post embedment, see Standard Plans A77C3.
3. Guard railing delineation to be used where shown on the Project Plans.
4. When dike or curb is placed under guard railing, the maximum height of the dike or curb shall be 4". Mountable dike should not be used. For dike and curb details, see Revised Standard Plans RSP A87A and Standard Plan A87B.
5. For details of typical distance between the face of rail and hinge point, see Standard Plan A77C3.

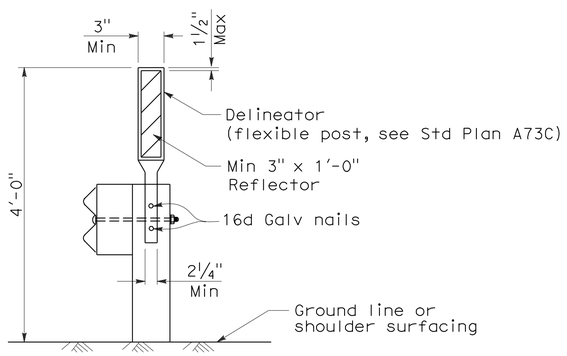

GUARD RAILING DELINEATION

See Note 3

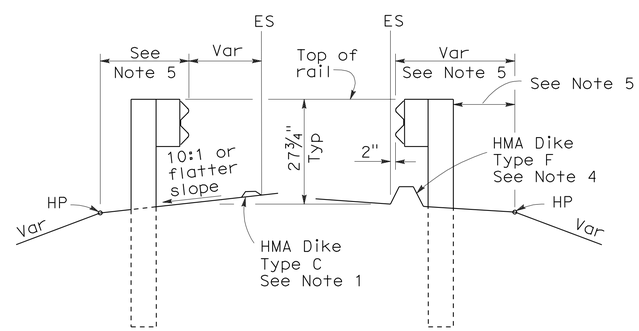

DIKE POSITIONING

See Note 1

STATE OF CALIFORNIA
DEPARTMENT OF TRANSPORTATION

METAL BEAM GUARD RAILING TYPICAL RAILING DELINEATION AND DIKE POSITIONING DETAILS

NO SCALE

RSP A77C4 DATED JUNE 6, 2008 SUPERSEDES STANDARD PLAN A77C4
DATED MAY 1, 2006 - PAGE 47 OF THE STANDARD PLANS BOOK DATED MAY 2006.

REVISED STANDARD PLAN RSP A77C4

2006 REVISED STANDARD PLAN RSP A77C4

12-10-07

DIST	COUNTY	ROUTE	POST MILES TOTAL PROJECT	SHEET NO.	TOTAL SHEETS
05	Mon	1	22.6/22.8	29	86

Randell D. Hiatt
REGISTERED CIVIL ENGINEER

June 6, 2008
PLANS APPROVAL DATE

REGISTERED PROFESSIONAL ENGINEER
Randell D. Hiatt
No. C50200
Exp. 6-30-09
CIVIL
STATE OF CALIFORNIA

The State of California or its officers or agents shall not be responsible for the accuracy or completeness of electronic copies of this plan sheet.

To accompany plans dated 8-16-10

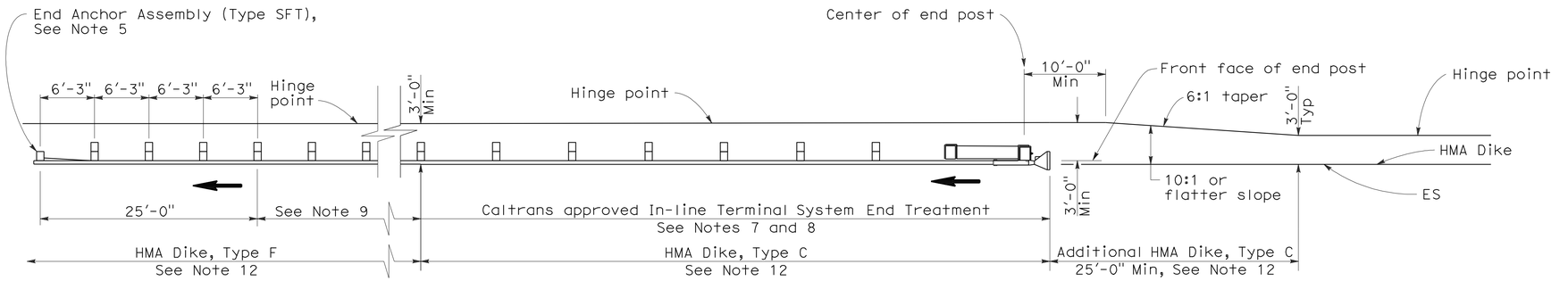

TYPE 11A LAYOUT

(EMBANKMENT GUARD INSTALLATION WITH IN-LINE END TREATMENT AT TRAFFIC APPROACH END OF RAILING)
See Note 6

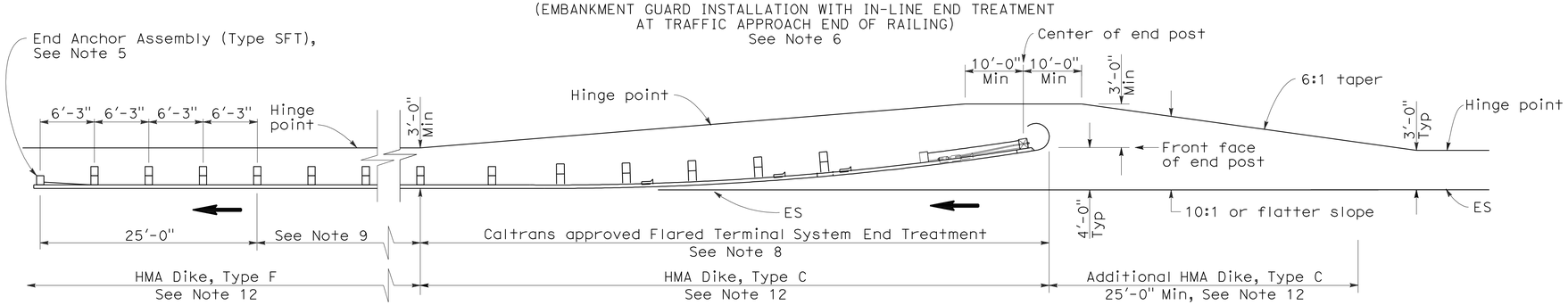

TYPE 11B LAYOUT

(EMBANKMENT GUARD RAILING INSTALLATION WITH FLARED END TREATMENT AT TRAFFIC APPROACH END OF RAILING)
See Note 6

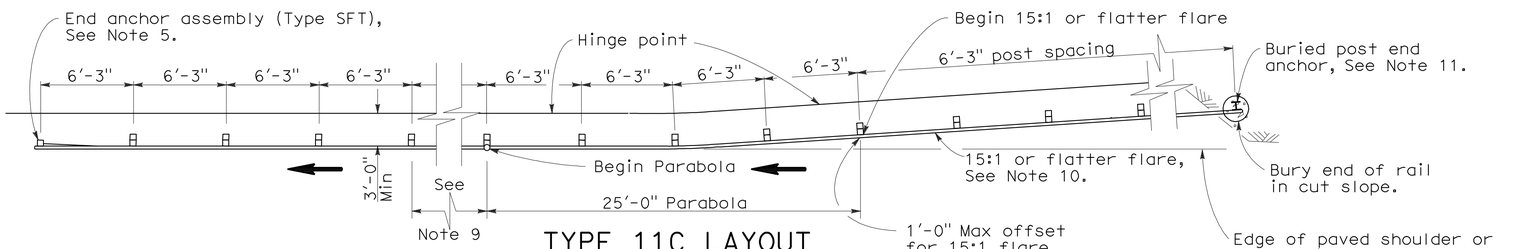

TYPE 11C LAYOUT

(EMBANKMENT GUARD RAILING INSTALLATION WITH BURIED END ANCHOR TREATMENT AT TRAFFIC APPROACH END OF RAILING)
See Notes 6 and 12

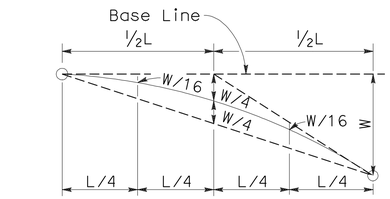

TYPICAL PARABOLIC LAYOUT

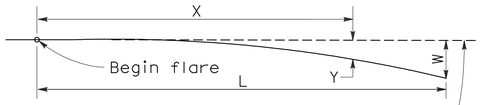

Base Line (Edge of paved shoulder or offset line of edge of traveled way)

$$Y = \frac{WX^2}{L^2}$$

Y = Offset from base line
W = Maximum offset
X = Distance along base line
L = Length of flare

PARABOLIC FLARE OFFSETS

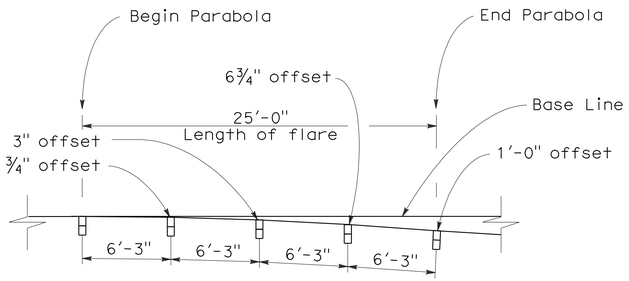

TYPICAL FLARE OFFSETS FOR 1 FOOT MAX END OFFSET

NOTES:

1. Line post, blocks and hardware to be used are shown on Standard Plans A77A1, A77A2, A77B1, A77C1, and A77C2.
2. Guard rail post spacing to be 6'-3" center to center, except as otherwise noted.
3. Except as noted, line posts are 6" x 8" x 6'-0" wood with 6" x 8" x 1'-2" wood blocks. W6 x 9 steel posts, 6'-0" in length, with 6" x 8" x 1'-2" notched wood blocks or recycled plastic blocks may be used for 6" x 8" x 6'-0" wood post with 6" x 8" x 1'-2" wood blocks where applicable and when specified.
4. Direction of adjacent traffic indicated by ⟶.
5. For End Anchor Assembly (Type SFT) details, see Standard Plan A77H1.
6. Layout Types 11A, 11B or 11C are typically used where guard railing is recommended to shield embankment slopes and a crashworthy end treatment is required for only one direction of traffic.
7. In-line Terminal System End Treatments are used where site conditions will not accommodate a flared end treatment.
8. The type of terminal system end treatment to be used will be shown on the Project Plans.
9. Dependent on site conditions (embankment height and side slope), construction of additional guard railing (length equal to multiples of 12'-6" with 6'-3" post spacing) may be advisable.
10. The 15:1 or flatter flare used with buried end anchors is based on the edge of the paved shoulder or offset line of edge of the traveled way. The length of guard railing within the 15:1 or flatter flare is based on site conditions and should be a length equal to multiples of 12'-6".
11. For details of the buried post end anchor used with Type 11C Layout, see Standard Plan A77I2.
12. Where placement of dike is required with guard railing installations, see Revised Standard Plan RSP A77C4 for dike positioning details.

STATE OF CALIFORNIA
DEPARTMENT OF TRANSPORTATION

METAL BEAM GUARD RAILING TYPICAL LAYOUTS FOR EMBANKMENTS

NO SCALE

RSP A77E1 DATED JUNE 6, 2008 SUPERSEDES STANDARD PLAN A77E1
DATED MAY 1, 2006 - PAGE 48 OF THE STANDARD PLANS BOOK DATED MAY 2006.

REVISED STANDARD PLAN RSP A77E1

2006 REVISED STANDARD PLAN RSP A77E1

12-10-07

DIST	COUNTY	ROUTE	POST MILES TOTAL PROJECT	SHEET NO.	TOTAL SHEETS
05	Mon	1	22.6/22.8	30	86

Randell D. Hiatt
REGISTERED CIVIL ENGINEER

June 6, 2008
PLANS APPROVAL DATE

REGISTERED PROFESSIONAL ENGINEER
Randell D. Hiatt
No. C50200
Exp. 6-30-09
CIVIL
STATE OF CALIFORNIA

The State of California or its officers or agents shall not be responsible for the accuracy or completeness of electronic copies of this plan sheet.

To accompany plans dated 8-16-10

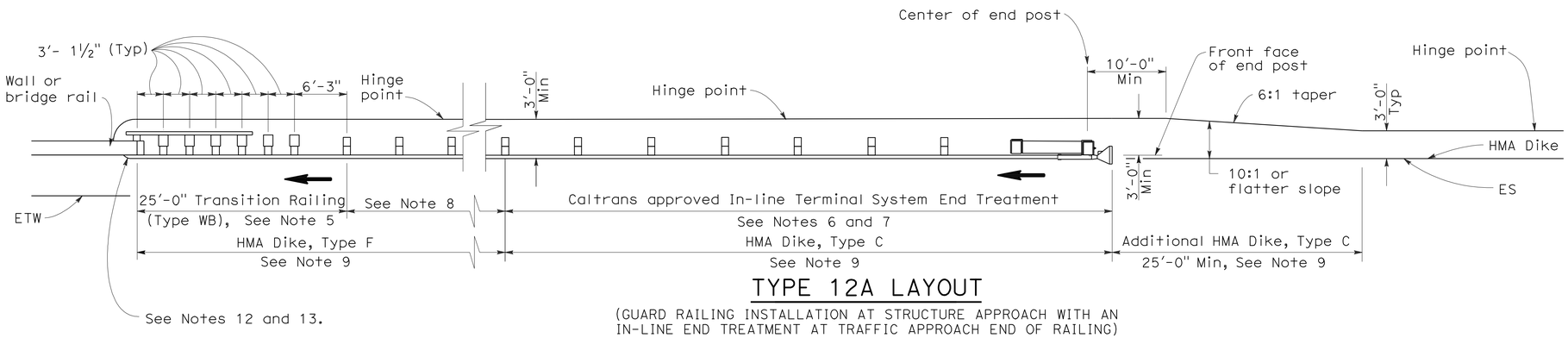

TYPE 12A LAYOUT

(GUARD RAILING INSTALLATION AT STRUCTURE APPROACH WITH AN IN-LINE END TREATMENT AT TRAFFIC APPROACH END OF RAILING)
See Notes 10

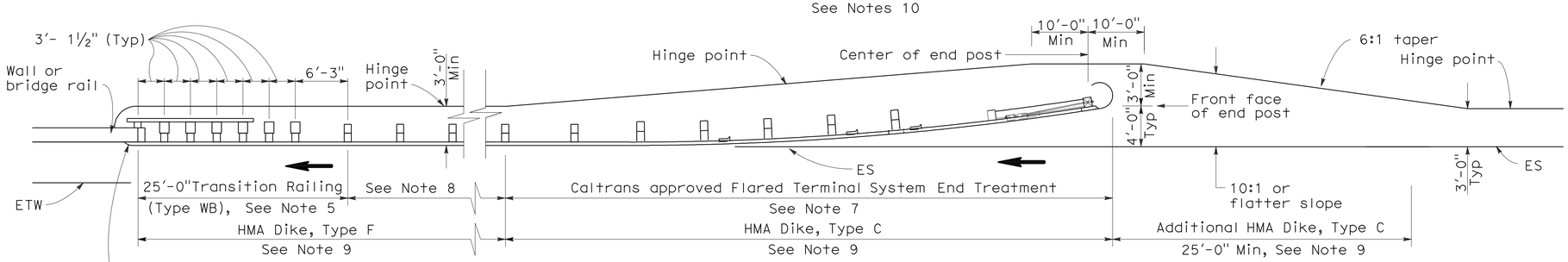

TYPE 12B LAYOUT

(GUARD RAILING INSTALLATION AT STRUCTURE APPROACH WITH A FLARED END TREATMENT AT TRAFFIC APPROACH END OF RAILING)
See Notes 10

NOTES:

1. Line post, blocks and hardware to be used are shown on Standard Plans A77A1, A77A2, A77B1, A77C1 and A77C2.
2. Guard rail post spacing to be 6'-3" center to center, except as otherwise noted.
3. Except as noted, line posts are 6" x 8" x 6'-0" wood with 6" x 8" x 1'-2" wood blocks. W6 x 9 steel posts, 6'-0" in length, with 6" x 8" x 1'-2" notched wood blocks or plastic blocks may be used for 6" x 8" x 6'-0" wood posts with 6" x 8" x 1'-2" wood blocks where applicable and when specified.
4. Direction of adjacent traffic indicated by ➡.
5. For Transition Railing (Type WB) details for Types 12A and 12B Layouts, see Standard Plan A77J4.
6. In-line Terminal System End Treatments are used where site conditions will not accommodate a flared end treatment.
7. The type of terminal system end treatment to be used will be shown on the Project Plans.
8. Dependent on site conditions (embankment height, side slopes, or other fixed objects), it may be advisable to construct additional guard railing (a length equal to multiples of 12'-6" with 6'-3" post spacing) between the transition railing and end treatment.
9. Where placement of dike is required with guard railing installations, see Revised Standard Plan RSP A77C4 for dike positioning details.
10. Type 12A or Type 12B Layouts are typically used:
    a. To the right of approaching traffic, at the end of a structure, on two-lane conventional highway where the roadbed width across the structure is less than 40 feet.
    b. To the left of approaching traffic, at the end of a structure, on two-lane conventional highway where the roadbed width across the structure is less than 40 feet.
    c. To the right of approaching traffic at the end of each structure on multilane freeways or expressways with separate adjacent or parallel bridges.
    d. To the right of approaching traffic at the end of the structure on multilane freeways or expressways with decked median on the bridge.
11. See Revised Standard Plan RSP A77F3 for typical layout used left of approaching traffic at the ends of each structure on multilane freeways or expressways with separate adjacent or parallel bridges.
12. For additional details of typical connections to bridge rail, see Connection Detail AA on Revised Standard Plans RSP A77J1 and RSP A77J2 and Connection Detail FF on Standard Plans A77K1 and A77K2.
13. For additional details of a typical connection to walls or abutments, see Standard Plan A77J3.

STATE OF CALIFORNIA
DEPARTMENT OF TRANSPORTATION

METAL BEAM GUARD RAILING TYPICAL LAYOUTS FOR STRUCTURE APPROACH

NO SCALE

RSP A77F1 DATED JUNE 6, 2008 SUPERSEDES STANDARD PLAN A77F1
DATED MAY 1, 2006 - PAGE 54 OF THE STANDARD PLANS BOOK DATED MAY 2006.

REVISED STANDARD PLAN RSP A77F1

2006 REVISED STANDARD PLAN RSP A77F1

12-10-07

DIST	COUNTY	ROUTE	POST MILES TOTAL PROJECT	SHEET NO.	TOTAL SHEETS
05	Mon	1	22.6/22.8	31	86

Randell D. Hiatt
REGISTERED CIVIL ENGINEER

June 6, 2008
PLANS APPROVAL DATE

REGISTERED PROFESSIONAL ENGINEER
Randell D. Hiatt
No. C50200
Exp. 6-30-09
CIVIL
STATE OF CALIFORNIA

The State of California or its officers or agents shall not be responsible for the accuracy or completeness of electronic copies of this plan sheet.

To accompany plans dated 8-16-10

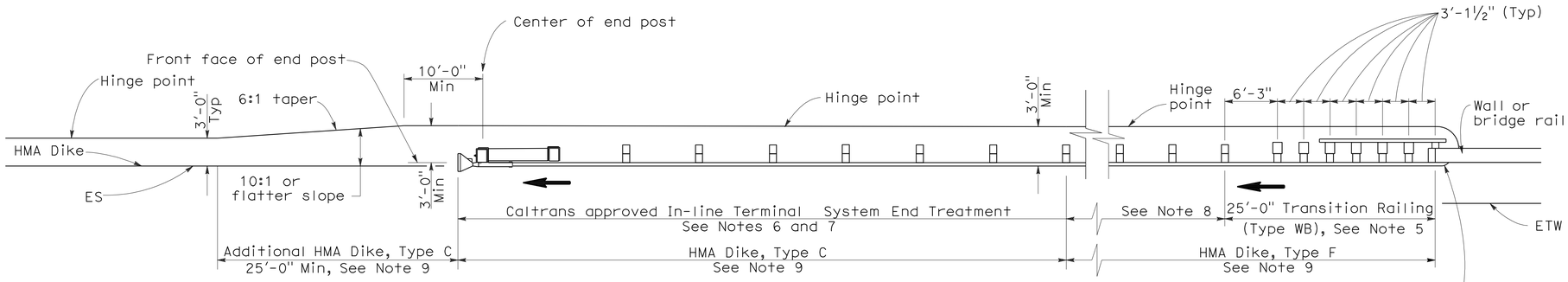

TYPE 12AA LAYOUT

(GUARD RAILING INSTALLATION AT STRUCTURE DEPARTURE WITH AN IN-LINE END TREATMENT AT TRAILING END OF RAILING)
See Notes 9 and 10

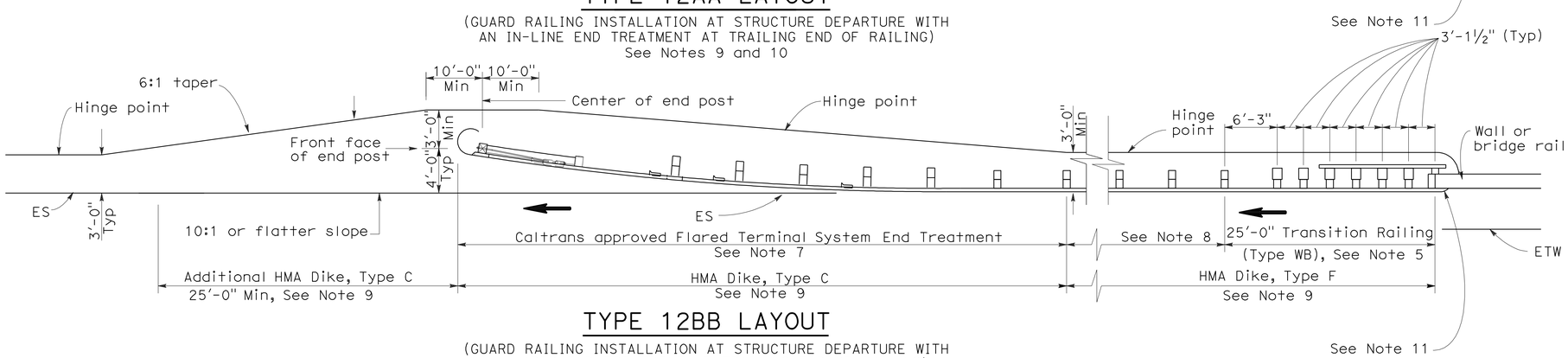

TYPE 12BB LAYOUT

(GUARD RAILING INSTALLATION AT STRUCTURE DEPARTURE WITH A FLARED END TREATMENT AT TRAILING END OF RAILING)
See Notes 9 and 10

NOTES:

1. Line post, blocks and hardware to be used are shown on Standard Plans A77A1, A77A2, A77B1, A77C1 and A77C2.
2. Guard rail post spacing to be 6'-3" center to center, except as otherwise noted.
3. Except as noted, line posts are 6" x 8" x 6'-0" wood with 6" x 8" x 1'-2" wood blocks. W6 x 9 steel posts, 6'-0" in length, with 6" x 8" x 1-2" notched wood blocks or notched recycled plastic blocks may be used for 6" x 8" x 6'-0" wood posts with 6" x 8" x 1'-2" wood blocks where applicable and when specified.
4. Direction of adjacent traffic indicated by ⟶.
5. For Transition Railing (Type WB) details for Types 12AA and 12BB Layouts, see Standard Plan A77J4.
6. In-line Terminal System Treatments are used where site conditions will not accommodate a flared end treatment.
7. The type of terminal system to be used will be shown on the Project Plans.
8. Dependent on site conditions (embankment height, side slopes, other fixed objects), it may be advisable to construct additional guard railing (a length equal to multiples of 12'-6" with 6'-3" post spacing) between the transition railing and end treatments.
9. Where placement of dike is required with guard railing installations, see Revised Standard Plan RSP A77C4 for dike positioning details.
10. Type 12AA or Type 12BB Layouts are typically used to the right of traffic departing a structure on two-way conventional highways where the roadbed width across the structure is less than 40 feet.
11. For additional details of typical connections to bridge rail, see Connection Detail CC on Revised Standard Plan RSP A77J2 and Connection Detail HH on Standard Plans A77k2.

STATE OF CALIFORNIA
DEPARTMENT OF TRANSPORTATION

METAL BEAM GUARD RAILING TYPICAL LAYOUTS FOR STRUCTURE DEPARTURE

NO SCALE

RSP A77F4 DATED JUNE 6, 2008 SUPERSEDES STANDARD PLAN A77F4
DATED MAY 1, 2006 - PAGE 57 OF THE STANDARD PLANS BOOK DATED MAY 2006.

REVISED STANDARD PLAN RSP A77F4

2006 REVISED STANDARD PLAN RSP A77F4

12-10-07

DIST	COUNTY	ROUTE	POST MILES TOTAL PROJECT	SHEET NO.	TOTAL SHEETS
05	Mon	1	22.6/22.8	32	86

Randell D. Hiatt
REGISTERED CIVIL ENGINEER

June 6, 2008
PLANS APPROVAL DATE

REGISTERED PROFESSIONAL ENGINEER
Randell D. Hiatt
No. C50200
Exp. 6-30-09
CIVIL
STATE OF CALIFORNIA

The State of California or its officers or agents shall not be responsible for the accuracy or completeness of electronic copies of this plan sheet.

To accompany plans dated 8-16-10

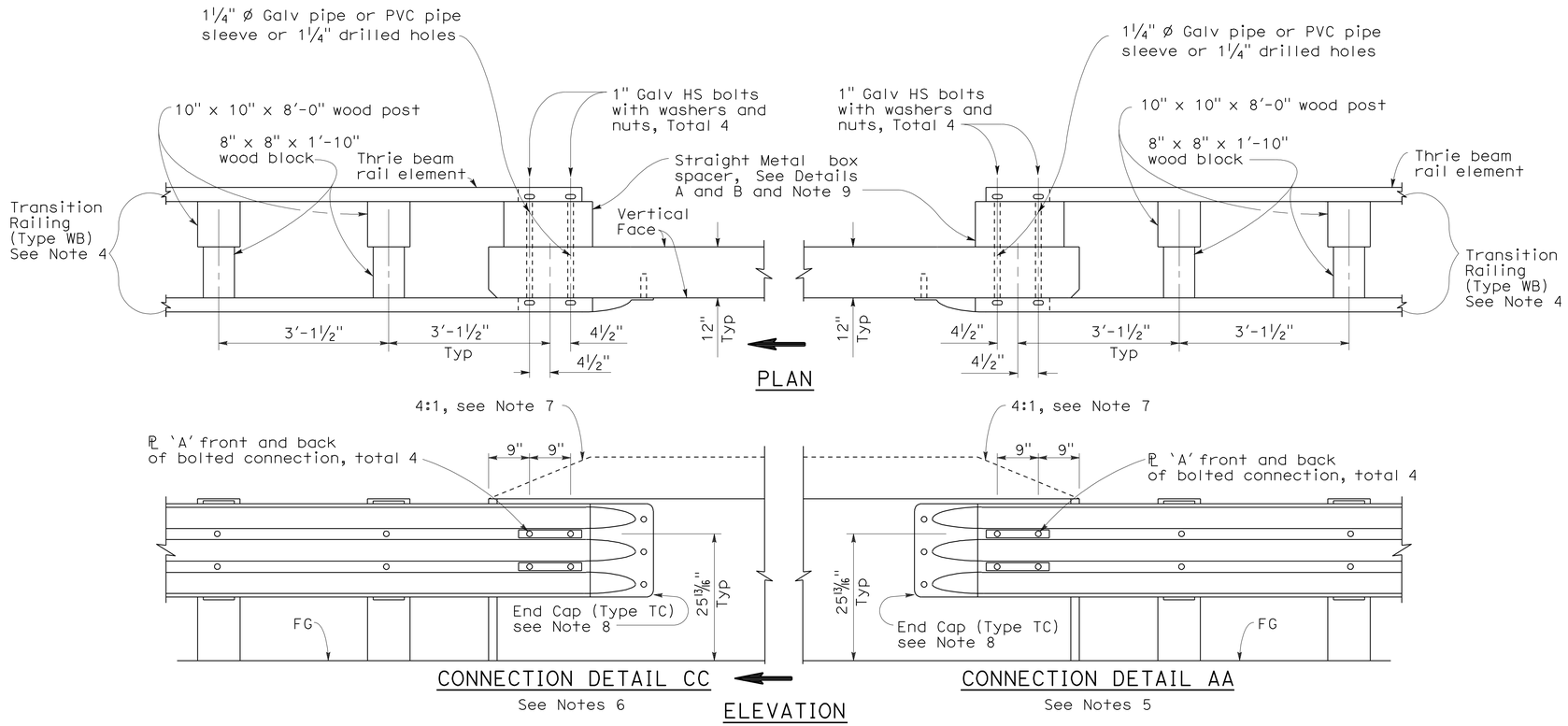

GUARD RAILING CONNECTION TO BRIDGE RAILING WITHOUT SIDEWALK

NOTES:

1. See Revised Standard Plan RSP A77J1 for additional connection details to bridges without sidewalks.
2. Additional details of posts, blocks and hardware are shown on Standard Plan A77B1, A77C1 and A77C2.
3. Direction of adjacent traffic indicated by ⟹.
4. For additional details of Transition Railing (Type WB), see Standard Plan A77J4. Transition Railing (Type WB) transitions the 12 gage w-beam standard railing section of guard railing to a heavier gage nested thrie beam railing section which is connected to the concrete bridge railing.
5. For typical use of Connection Detail AA, see Layout Types 12A and 12B on Revised Standard Plan RSP A77F1, Layout Types 12C and 12D on Standard Plan A77F2, and Layout Type 12E on Revised Standard Plan RSP A77F3.
6. For typical use of Connection Detail CC, see Layout Types 12AA and 12BB on Standard Plan A77F4 and Layout Type 12CC on Standard Plan A77F5.
7. Where the height of the bridge railing exceeds the height of the thrie beam railing by more than 1" at Connection Detail AA and connection Detail CC, taper the top of the end of the bridge railing at 4:1 to match the top elevation of the thrie beam railing.
8. For details of End Cap (Type TC), see Standard Plans A77J4.
9. See Standard Plans A77J4 for additional details regarding depth dimension for straight metal box spacer.

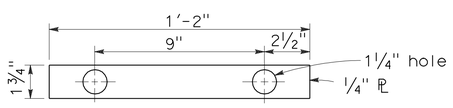

PLATE 'A'

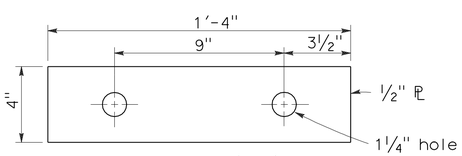

PLATE 'B'
(For backside of connection BB)

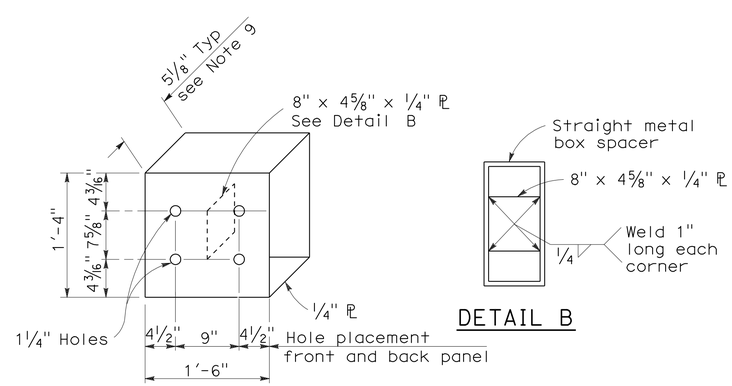

DETAIL A

DETAIL B

STRAIGHT METAL BOX SPACER

STATE OF CALIFORNIA
DEPARTMENT OF TRANSPORTATION

METAL BEAM GUARD RAILING CONNECTIONS TO BRIDGE RAILINGS WITHOUT SIDEWALKS DETAILS No.2

NO SCALE

RSP A77J2 DATED JUNE 6, 2008 SUPERSEDES STANDARD PLAN A77J2 DATED MAY 1, 2006 - PAGE 73 OF THE STANDARD PLANS BOOK DATED MAY 2006.

REVISED STANDARD PLAN RSP A77J2

2006 REVISED STANDARD PLAN RSP A77J2

12-10-07

DIST	COUNTY	ROUTE	POST MILES TOTAL PROJECT	SHEET NO.	TOTAL SHEETS
05	Mon	1	22.6/22.8	33	86

Randell D. Hiatt
REGISTERED CIVIL ENGINEER

June 5, 2009
PLANS APPROVAL DATE

REGISTERED PROFESSIONAL ENGINEER
Randell D. Hiatt
No. C50200
Exp. 6-30-09
CIVIL
STATE OF CALIFORNIA

The State of California or its officers or agents shall not be responsible for the accuracy or completeness of electronic copies of this plan sheet.

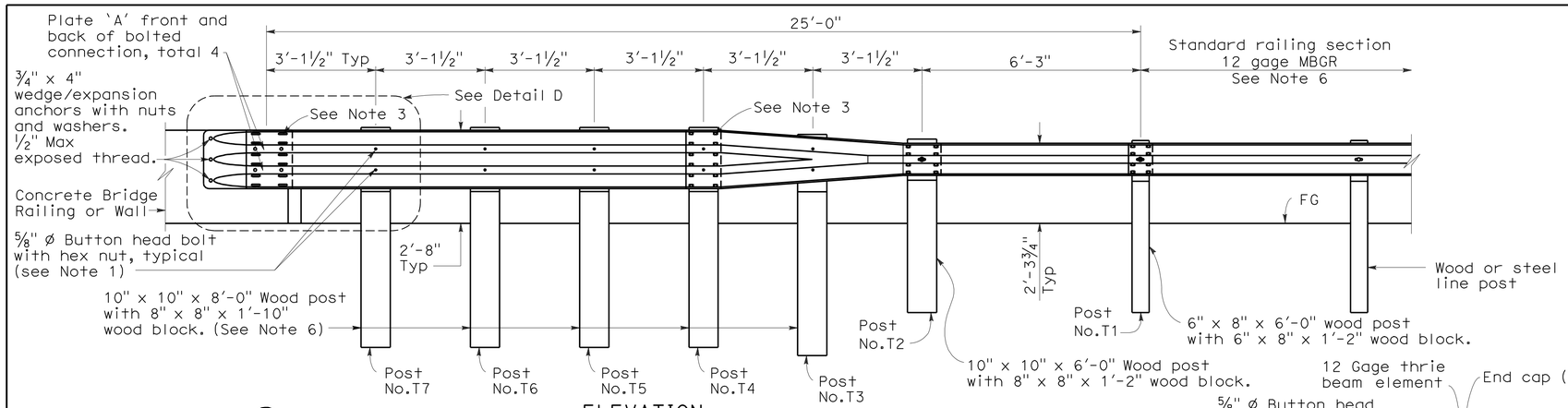

ELEVATION

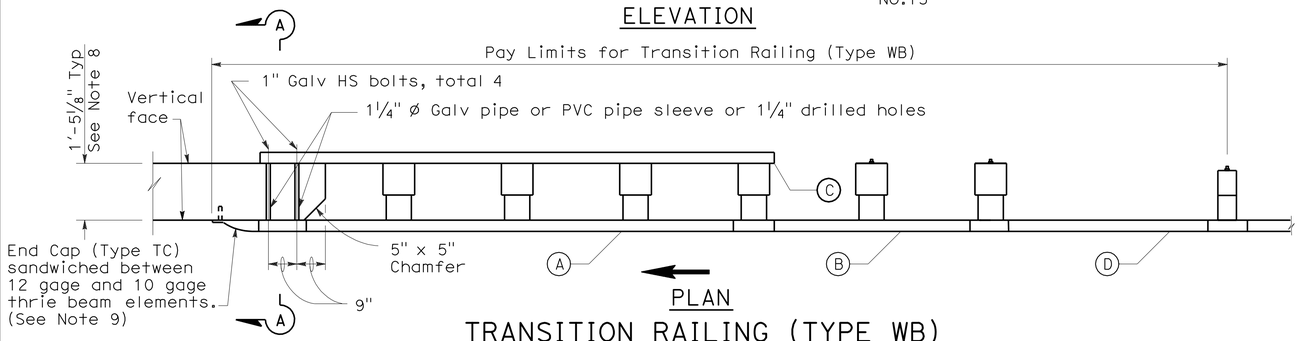

PLAN

TRANSITION RAILING (TYPE WB)

(No Blockout Attachment)

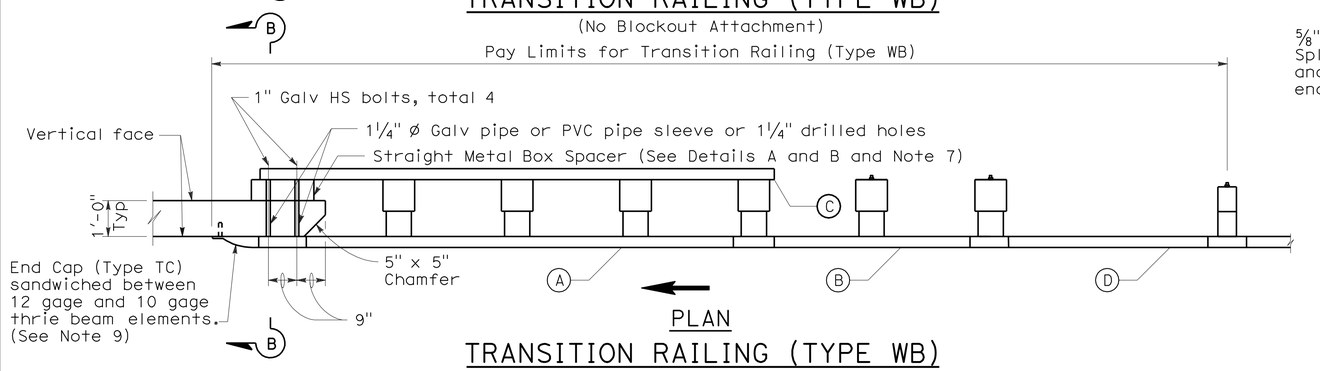

PLAN

TRANSITION RAILING (TYPE WB)

(Blockout Attachment)

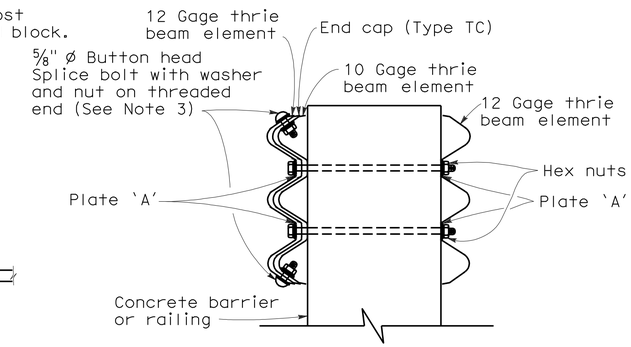

SECTION A-A

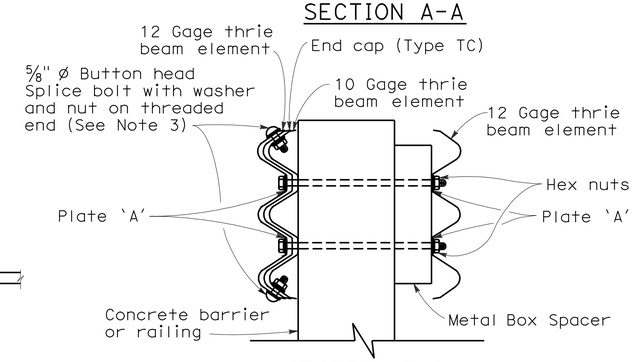

SECTION B-B

NOTES:

To accompany plans dated 8-16-10

1. Use 5/8 " ø Button head bolts and hex nuts for connections to posts. No washer on rail face for bolted connections to post.
2. The nested rail elements, end cap, and 'W' beam to thrie beam element may be spliced together prior to bolting the elements to the wood post and concrete barrier or railing.
3. Exterior splice bolt holes for rail element splices at Post No.T4 and the connection to the concrete barrier or railing shall be the standard 29/32 " x 1 1/8 " slot size. Interior splice bolt holes at these locations may be increased up to 1 1/4 " ø. Only the top 2 and the bottom 2 splice bolts with washers and nuts are required for rail splices at Post No.T4 and the connection to the concrete barrier or railing.
4. Direction of adjacent traffic indicated by →.
5. The top elevation of Post Nos.T2 through T7 shall not project more than 1" above the top elevation of the rail element.
6. Typically, the railing connected to Transition Railing (Type WB) will be either standard railing section of metal beam guard railing or an approved Caltrans end treatment attached to Post No.T1.
7. The depth of the metal box spacer varies from the 5 1/8 " to 1 1/2 " and is dependent on the width of the concrete railing or wall. The combined dimension for the depth of the metal box spacer plus the width of railing or wall is typically 17 1/8 ". Where the space between the backside of the concrete railing or wall and the rear thrie beam element is less than 1 1/2 ", metal plates similar to Plate 'A' are to be used as spacers.
8. Where the width of the concrete railing or wall is greater than 17 1/8 ", wood blocks are to be used to fill the space created between the backside of Posts No.4 through No.7 and the rear thrie beam element. These wood blocks shall be 8" in width and 1'-2" in length. The dimension between the front thrie beam element and the rear thrie beam element is to match the width of the concrete railing or wall.
9. End cap may be installed over 12 gage and 10 gage thrie beam elements where transition railing is installed on the departure end of bridge railing.

LEGEND

(A) Nested thrie beam elements (one 12 gage element nested over one 10 gage element).

(B) One 10 gage "W" beam to thrie beam element.

(C) One 12 gage thrie beam element.

(D) One 10 gage "W" beam rail element (7'-3½" length)

10 gage = 0.135" thick

12 gage = 0.108" thick

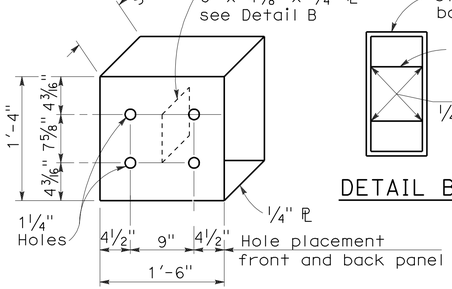

DETAIL A

STRAIGHT METAL BOX SPACER

DETAIL B

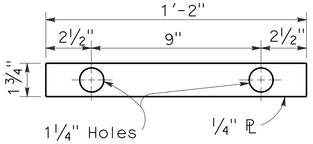

DETAIL C

PLATE 'A'

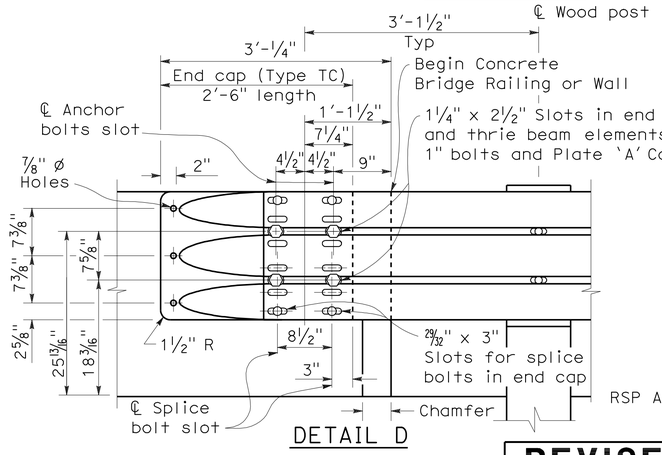

DETAIL D

STATE OF CALIFORNIA
DEPARTMENT OF TRANSPORTATION

METAL BEAM GUARD RAILING TRANSITION RAILING (TYPE WB)

NO SCALE

RSP A77J4 DATED JUNE 5, 2009 SUPERSEDES RSP A77J4 DATED JUNE 6, 2008 AND STANDARD PLAN A77J4 DATED MAY 1, 2006 - PAGE 75 OF THE STANDARD PLANS BOOK DATED MAY 2006.

REVISED STANDARD PLAN RSP A77J4

2006 REVISED STANDARD PLAN RSP A77J4

DIST	COUNTY	ROUTE	POST MILES TOTAL PROJECT	SHEET NO.	TOTAL SHEETS
05	Mon	1	22.6/22.8	34	86

LICENSED LANDSCAPE ARCHITECT

June 5, 2009
PLANS APPROVAL DATE

The State of California or its officers or agents shall not be responsible for the accuracy or completeness of electronic copies of this plan sheet.

LICENSED LANDSCAPE ARCHITECT — Gregory A. Balzer 2016 — 10 (Renewal) 2-28-11 (Renewal Date) 5-14-09 (Date) — STATE OF CALIFORNIA

To accompany plans dated 8-16-10

A

AB	aggregate base
ABS	acrylonitrile-butadiene-styrene
AC	asphalt concrete
Adj	adjacent/adjustable
AIC	auxiliary irrigation controller
Alt	alternative
AMEND	amendment
ARV	air release valve
AUTO	automatic
AUX	auxiliary
AVB	atmospheric vacuum breaker

B

B&B	balled and burlapped
B/B	brass/bronze
B/B/PL	brass/bronze/plastic
B/PL	brass/plastic
BFM	bonded fiber matrix
Bit Ctd	bituminous coated
BP	booster pump
BPA	backflow preventer assembly
BPAE	backflow preventer assembly in enclosure
BPE	backflow preventer enclosure
BV	ball valve

C

CAP	corrugated aluminum pipe
CARV	combination air release valve
CCA	cam coupler assembly
CEC	controller enclosure cabinet
CHDPE	corrugated high density polyethylene
CL	chain link
CNC	control and neutral conductors
Conc	concrete
Cond	conduit
CSP	corrugated steel pipe
CST	center strip
CV	check valve

D

Dia	diameter
DIP	ductile iron pipe
DN	diameter nominal

E

EA	each
Elect	electric/electrical
Elev	elevation
ENCL	enclosure
EP	edge of pavement
ES	edge of shoulder
EST	end strip
ESTB	establishment
ETW	edge of traveled way

F

F	full circle
F/P	full/part circle
FAU	filter assembly unit
FCV	flow control valve
FERT	fertilizer
FG	finished grade
FIPT	female iron pipe thread
FIS	fertilizer injector system
FL	flow line
FM	flow monitor
FS	flow sensor
Ft	foot/feet
FV	flush valve

G

GAL	Gallon(s)
Galv	galvanized
GARV	garden valve
GPH	gallons per hour
GPM	gallons per minute
GSP	galvanized steel pipe
GV	gate valve

H

H	half circle
HB	hose bib
HDPE	high density polyethylene
HP	horsepower/hinge point
HPL	high pressure line
Hwy	highway

I

IC	irrigation controller
ICC	irrigation controller(s) in controller enclosure cabinet
ID	inside diameter
In	inches
IFS	irrigation filtration system
IPS	iron pipe size
IPT	iron pipe thread
Irr	irrigation

L

L	length
LF	linear foot

M

Max	maximum
MBGR	metal beam guard railing
MCV	manual control valve
MIC	master irrigation controller
Min	minimum
MIPT	male iron pipe thread
Misc	miscellaneous
Mtl	material
MVP	maintenance vehicle pullout

N

NCN	no common name
NL	nozzle line
No.	number
NPT	national pipe thread

O

O/C	on center
OD	outside diameter
Oz	ounce

P

P	part circle
PB	pull box
PCC	portland cement concrete
PE	polyethylene
Pkt	packet
PL	plastic
PLT	plant/planting
PLT ESTB	plant establishment
PM	post mile
PR	pressure rated
PRLV	pressure relief valve
PSFM	polymer stabilized fiber matrix
PSI	pounds per square inch
PRV	pressure reducing valve
PVC	polyvinyl chloride
Pvmt	pavement

Q

Q	quarter circle
QCV	quick coupling valve

R

R	radius
RCP	reinforced concrete pipe
RCV	remote control valve
RCVM	remote control valve (master)
RCVMF	remote control valve (master) w/ flow meter
RCW	recycled/reclaimed water
RECP	rolled erosion control product
REQ	required
R/W	right of way

S

S	slip
SCC	sprinkler control conduit
SCH	schedule
SF	state-furnished
Shld	shoulder
SQFT	square foot/feet
SQYD	square yard(s)
SST	side strip
Sta	station
Std	standard
SW	sidewalk/sound wall

T

T	third circle/thread
TLS	truck loading standpipe
TQ	three quarter circle
TRM	turf reinforcement mat
TRVD	traveled
TT	two third circle
Typ	typical

U

UG	underground

V

VAU	valve assembly unit

W

W	width
W/	with
WM	water meter
WS	wye strainer
WSP	welded steel pipe
WWM	welded wire mesh

NOTE:

FOR ADDITIONAL ABBREVIATIONS, SEE STANDARD PLANS A10A AND A10B.

STATE OF CALIFORNIA
DEPARTMENT OF TRANSPORTATION

PLANTING AND IRRIGATION ABBREVIATIONS

NO SCALE

RSP H1 DATED JUNE 5, 2009 SUPERSEDES STANDARD PLAN H1 DATED MAY 1, 2006 - PAGE 201 OF THE STANDARD PLANS BOOK DATED MAY 2006.

REVISED STANDARD PLAN RSP H1

2006 REVISED STANDARD PLAN RSP H1

DIST	COUNTY	ROUTE	POST MILES TOTAL PROJECT	SHEET NO.	TOTAL SHEETS
05	Mon	1	22.6/22.8	35	86

LICENSED LANDSCAPE ARCHITECT

June 5, 2009
PLANS APPROVAL DATE

The State of California or its officers or agents shall not be responsible for the accuracy or completeness of electronic copies of this plan sheet.

LICENSED LANDSCAPE ARCHITECT — Gregory A. Balzer 2576 — 10-01-11 Renewal Date — 2-28-11 Date — 5-14-09 Date — STATE OF CALIFORNIA

To accompany plans dated 8-16-10

EXISTING	PROPOSED	ITEM DESCRIPTION
		WATER METER (WM)
		BACKFLOW PREVENTER ASSEMBLY (BPA)
		BACKFLOW PREVENTER ASSEMBLY IN ENCLOSURE (BPAE)
		BACKFLOW PREVENTER ENCLOSURE (BPE)
		BOOSTER PUMP (BP)
		TRUCK LOADING STANDPIPE (TLS)
	FS	FLOW SENSOR (FS)
X	X	MASTER IRRIGATION CONTROLLER (MIC)
		AUXILIARY IRRIGATION CONTROLLER (AIC)
		IRRIGATION CONTROLLER (IC)/ IRRIGATION CONTROLLER (IC) (BATTERY) IRRIGATION CONTROLLER (IC) (SOLAR)
		IRRIGATION CONTROLLER(S) IN CONTROLLER ENCLOSURE CABINET (ICC)
		CONTROL AND NEUTRAL CONDUCTORS (CNC)
SCC	SCC	SPRINKLER CONTROL CONDUIT (SCC)
		IRRIGATION CROSSOVER
		EXTEND IRRIGATION CROSSOVER
		IRRIGATION SLEEVE
dip	DIP	DUCTILE IRON PIPE (SUPPLY LINE) (MAIN) (DIP)
		GALVANIZED STEEL PIPE (SUPPLY LINE) (MAIN) (GSP)
		GALVANIZED STEEL PIPE (SUPPLY LINE) (LATERAL) (GSP)
		PLASTIC PIPE (PR 200) (SUPPLY LINE) (MAIN)
		PLASTIC PIPE (PR 200) (SUPPLY LINE) (LATERAL)
		PLASTIC PIPE (IRRIGATION LINE)
		REMOTE CONTROL VALVE (RCV) REMOTE CONTROL VALVE (MASTER) (RCVM) REMOTE CONTROL VALVE (MASTER) W/FLOW METER (RCVMF)
		MANUAL CONTROL VALVE (MCV)
		VALVE ASSEMBLY UNIT (VAU)
		WYE STRAINER (WS)
		FILTER ASSEMBLY UNIT (FAU)
		GATE VALVE (GV)
		BALL VALVE (BV)

EXISTING	PROPOSED	ITEM DESCRIPTION
		QUICK COUPLING VALVE (QCV)
		CAM COUPLER ASSEMBLY (CCA)
		PRESSURE REDUCING VALVE (PRV)
		PRESSURE RELIEF VALVE (PRLV)
		FLOW CONTROL VALVE (FCV)
		COMBINATION AIR RELEASE VALVE (CARV)
		CHECK VALVE (CV)
		FLUSH VALVE (FV)
		NOZZLE LINE W/TURNING UNION
		IRRIGATION SYSTEM
		IRRIGATION SYSTEM TO BE REMOVED
		CHAIN LINK GATE
		QUICK COUPLING VALVE W/SPRINKLER PROTECTOR
3	3	SPRINKLER W/SPRINKLER PROTECTOR
	C	CONNECT TO EXISTING SYSTEM
		CAP
		CAP EXISTING

VALVE CODE

RCV SIZE
IRRIGATION CONTROLLER
CONTROLLER STATION
VALVE IN PARALLEL (IF APPLICABLE)
GPM
QUANTITY OF SPRINKLERS (WHEN SHOWN)

* 2½"-A-2b-40 -60

MCV SIZE
VALVE NUMBER
GPM
QUANTITY OF TYPE SPRINKLERS (WHEN SHOWN)

* 2"-3-30 -50

* VALVE CODES FOR EXISTING VALVES ARE SHOWN IN A DASHED ENCLOSURE.

STATE OF CALIFORNIA
DEPARTMENT OF TRANSPORTATION

PLANTING AND IRRIGATION SYMBOLS

NO SCALE

RSP H2 DATED JUNE 5, 2009 SUPERSEDES RSP H2 DATED MARCH 7, 2008 AND STANDARD PLAN H2 DATED MAY 1, 2006 - PAGE 202 OF THE STANDARD PLANS BOOK DATED MAY 2006.

REVISED STANDARD PLAN RSP H2

2006 REVISED STANDARD PLAN RSP H2

5-11-09

DIST	COUNTY	ROUTE	POST MILES TOTAL PROJECT	SHEET NO.	TOTAL SHEETS
05	Mon	1	22.6/22.8	36	86

LICENSED LANDSCAPE ARCHITECT

June 5, 2009
PLANS APPROVAL DATE

The State of California or its officers or agents shall not be responsible for the accuracy or completeness of electronic copies of this plan sheet.

LICENSED LANDSCAPE ARCHITECT Gregory A. Balzer 2576 STATE OF CALIFORNIA
9-10-09 Renewal Date
2-28-11 Renewal Date
5-14-09 Date

To accompany plans dated 8-16-10

2006 REVISED STANDARD PLAN RSP H7

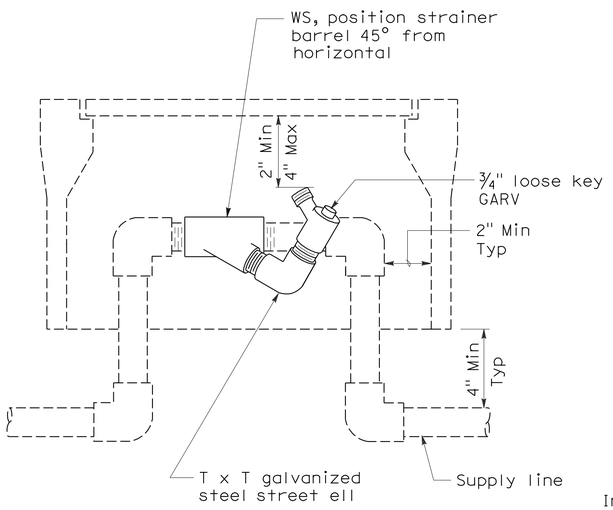

ELEVATION
WYE STRAINER

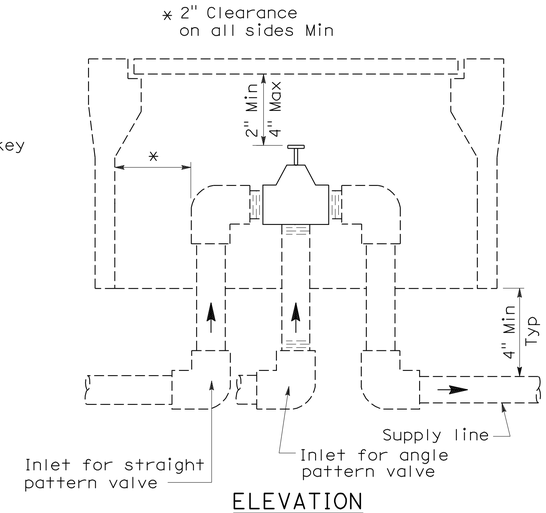

ELEVATION
VALVE

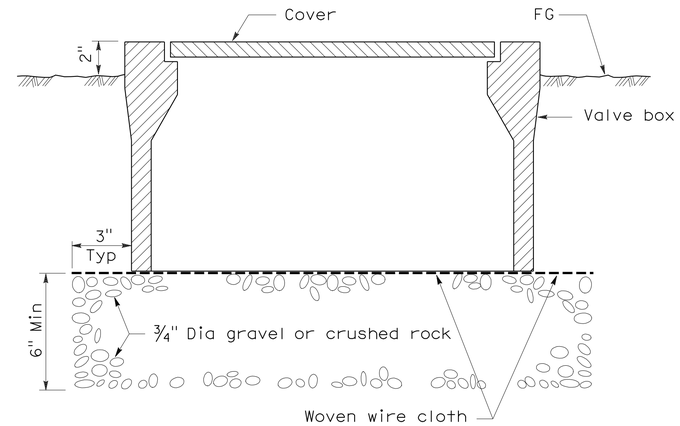

SECTION
VALVE BOX

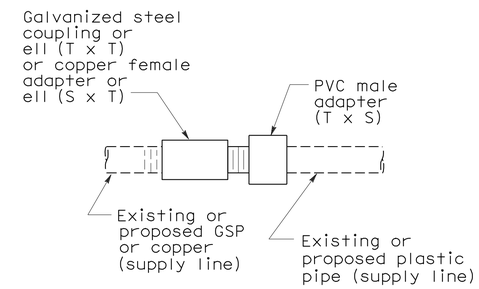

PLAN
GALVANIZED OR COPPER PIPE CONNECTION TO PLASTIC PIPE

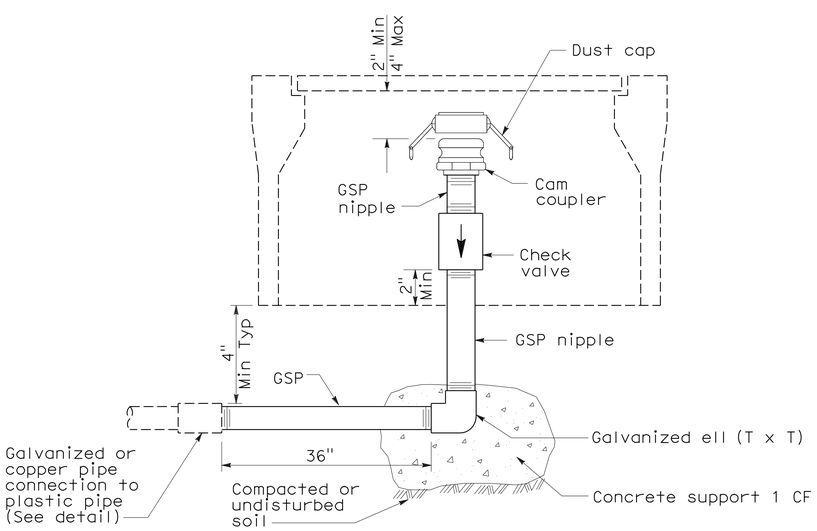

ELEVATION
CAM COUPLER ASSEMBLY

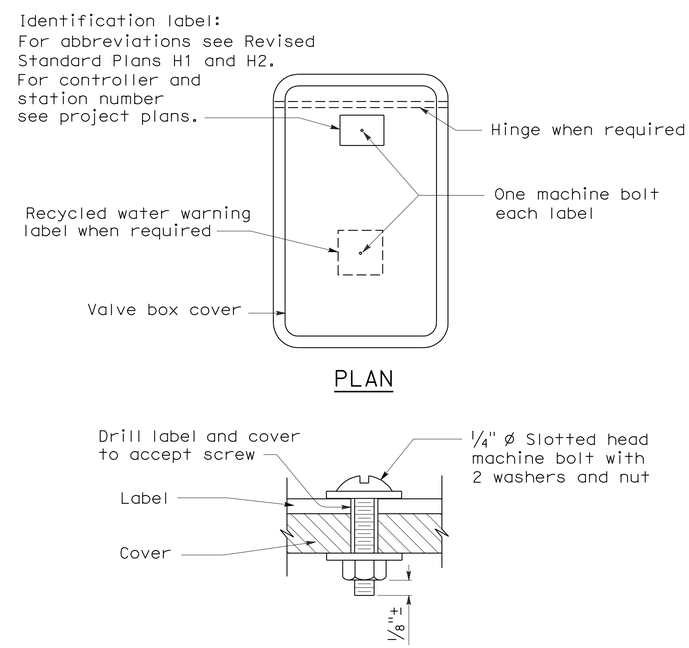

PLAN

SECTION
VALVE BOX IDENTIFICATION

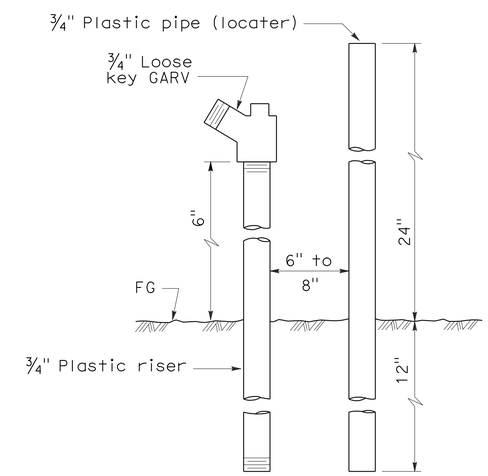

ELEVATION
FLUSH VALVE

STATE OF CALIFORNIA
DEPARTMENT OF TRANSPORTATION

PLANTING AND IRRIGATION DETAILS

NO SCALE

RSP H7 DATED JUNE 5, 2009 SUPERSEDES STANDARD PLAN H7
DATED MAY 1, 2006 - PAGE 207 OF THE STANDARD PLANS BOOK DATED MAY 2006.

REVISED STANDARD PLAN RSP H7

5-28-09

DIST	COUNTY	ROUTE	POST MILES TOTAL PROJECT	SHEET NO.	TOTAL SHEETS
05	Mon	1	22.6/22.8	37	86

LICENSED LANDSCAPE ARCHITECT

April 3, 2009
PLANS APPROVAL DATE

The State of California or its officers or agents shall not be responsible for the accuracy or completeness of electronic copies of this plan sheet.

LICENSED LANDSCAPE ARCHITECT
Gregory A. Balzer 3878
Signature
02-28-11
Renewal Date
03-04-09
Date
STATE OF CALIFORNIA

To accompany plans dated 8-16-10

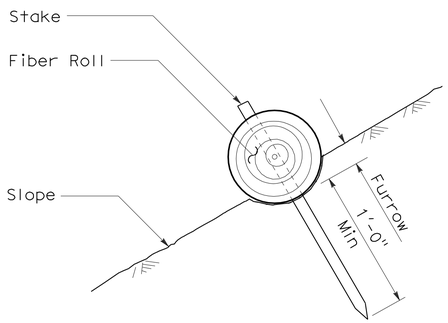

SECTION

FIBER ROLL
(TYPE 1)

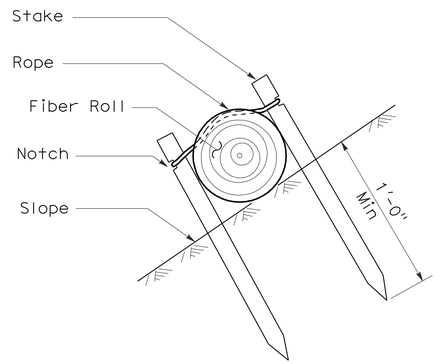

SECTION

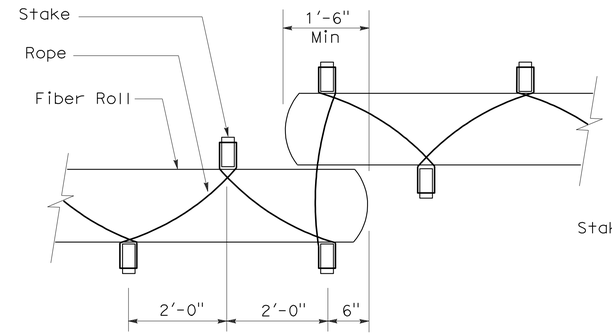

PLAN

FIBER ROLL
(TYPE 2)

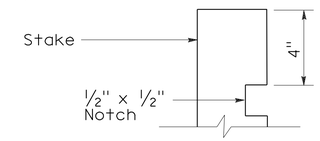

ELEVATION

STAKE NOTCH DETAIL

NOTES:

1. Fiber roll spacing varies depending upon slope inclination.
2. Installations shown in the perspectives are for slope inclination of 10:1 and steeper.

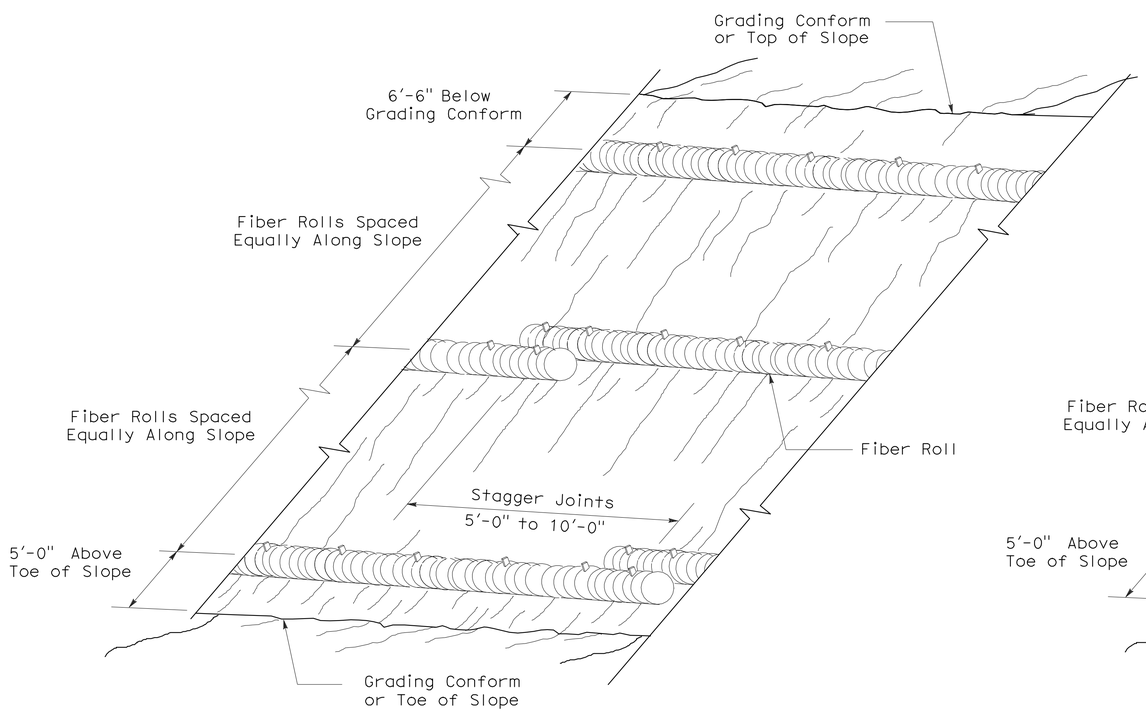

PERSPECTIVE

FIBER ROLL (TYPE 1)

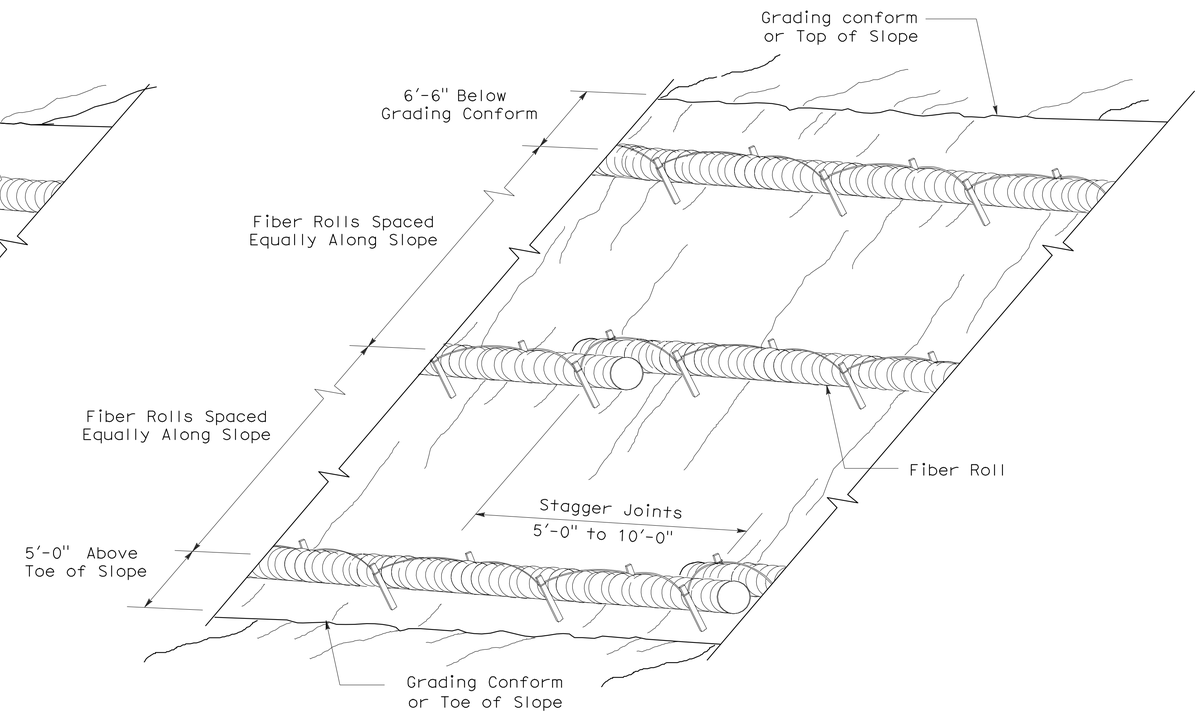

PERSPECTIVE

FIBER ROLL (TYPE 2)

STATE OF CALIFORNIA
DEPARTMENT OF TRANSPORTATION

EROSION CONTROL DETAILS (FIBER ROLL)

NO SCALE

RNSP H51 DATED APRIL 3, 2009 SUPERSEDES NSP H51 DATED DECEMBER 1, 2006 THAT SUPPLEMENTS THE STANDARD PLANS BOOK DATED MAY 2006.

REVISED NEW STANDARD PLAN RNSP H51

2006 REVISED NEW STANDARD PLAN RNSP H51

DIST	COUNTY	ROUTE	POST MILES TOTAL PROJECT	SHEET NO.	TOTAL SHEETS
05	Mon	1	22.6/22.8	38	86

Randell D. Hiatt
REGISTERED CIVIL ENGINEER

June 6, 2008
PLANS APPROVAL DATE

REGISTERED PROFESSIONAL ENGINEER
Randell D. Hiatt
No. C50200
Exp. 6-30-09
CIVIL
STATE OF CALIFORNIA

The State of California or its officers or agents shall not be responsible for the accuracy or completeness of electronic copies of this plan sheet.

To accompany plans dated 8-16-10

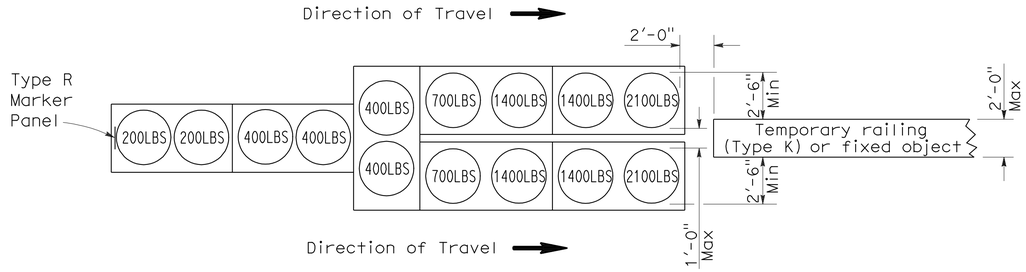

ARRAY `TU14'

Approach speed 45 mph or more

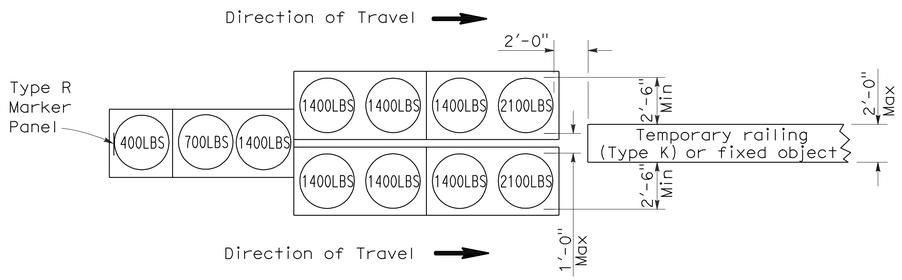

ARRAY `TU11'

Approach speed less than 45 mph

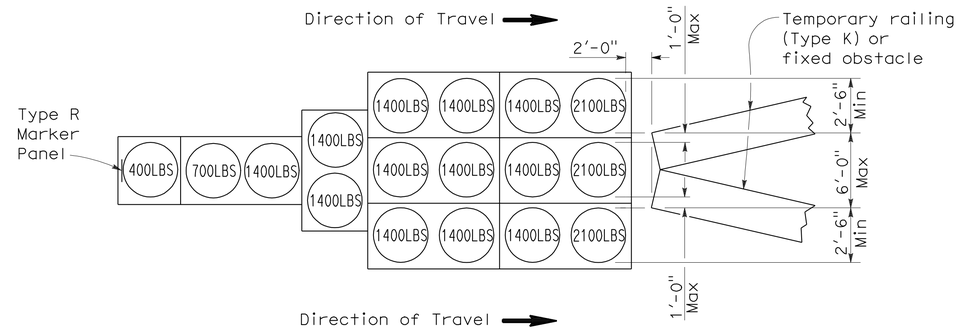

ARRAY `TU17'

Approach speed less than 45 mph

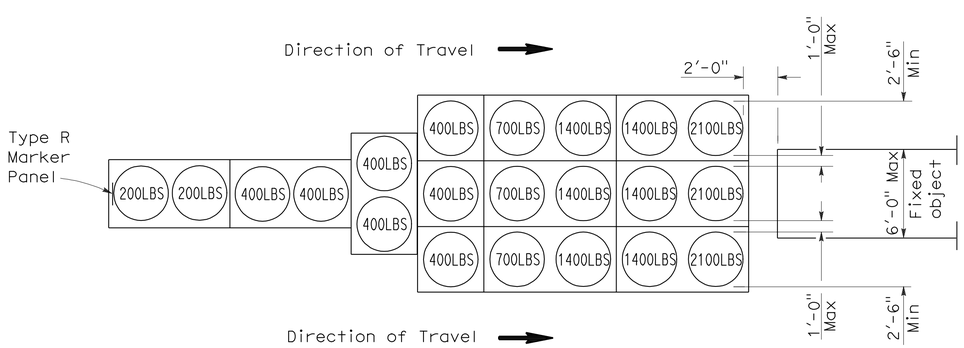

ARRAY `TU21'

Approach speed 45 mph or more

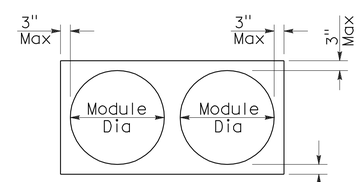

PLAN

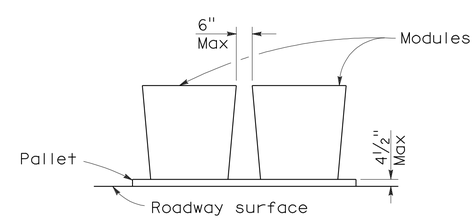

ELEVATION

CRASH CUSHION PALLET DETAIL

See Note 7

NOTES:

1. (XXX) Indicates sand filled module location and weight of sand in pounds for each module. Module spacing is based on the greater diameter of the module.
2. All sand weights are nominal.
3. Temporary crash cushion arrays shall not encroach on the traveled way.
4. Place the top of Type R marker panel 1" below the module lid.
5. Refer to Standard Plan A73B for marker details.
6. Approach speeds indicated conform to NCHRP 350 Report criteria.
7. Use of pallets is optional.

STATE OF CALIFORNIA
DEPARTMENT OF TRANSPORTATION

TEMPORARY CRASH CUSHION, SAND FILLED (UNIDIRECTIONAL)

NO SCALE

RSP T1A DATED JUNE 6, 2008 SUPERSEDES STANDARD PLAN T1A
DATED MAY 1, 2006 - PAGE 211 OF THE STANDARD PLANS BOOK DATED MAY 2006.

REVISED STANDARD PLAN RSP T1A

2006 REVISED STANDARD PLAN RSP T1A

DIST	COUNTY	ROUTE	POST MILES TOTAL PROJECT	SHEET NO.	TOTAL SHEETS
05	Mon	1	22.6/22.8	39	86

Randell D. Hiatt
REGISTERED CIVIL ENGINEER

June 6, 2008
PLANS APPROVAL DATE

REGISTERED PROFESSIONAL ENGINEER
Randell D. Hiatt
No. C50200
Exp. 6-30-09
CIVIL
STATE OF CALIFORNIA

The State of California or its officers or agents shall not be responsible for the accuracy or completeness of electronic copies of this plan sheet.

To accompany plans dated 8-16-10

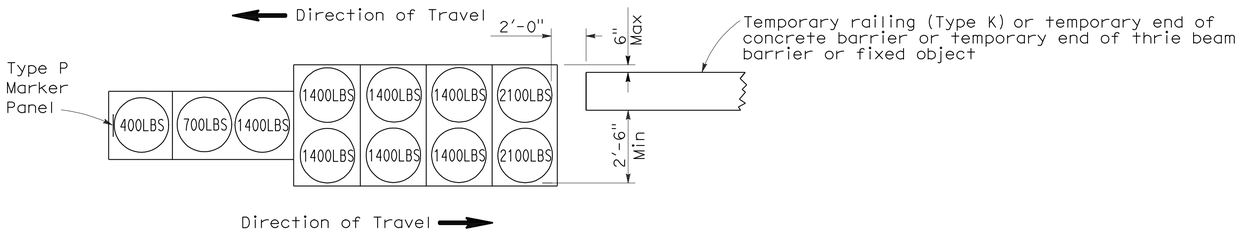

ARRAY 'TB11'

Approach speed less than 45 mph

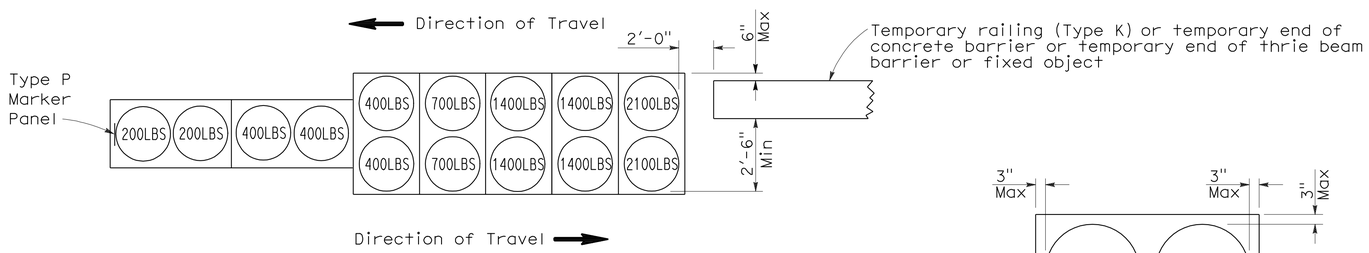

ARRAY 'TB14'

Approach speed 45 mph or more

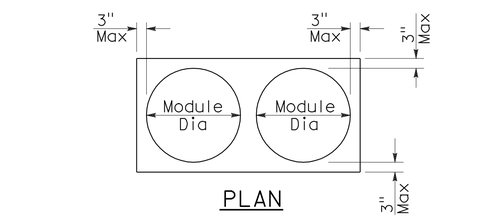

PLAN

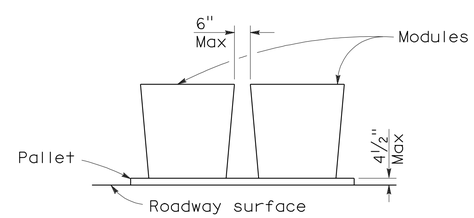

ELEVATION

CRASH CUSHION PALLET DETAIL

See Note 7

NOTES:

1. (XXX) Indicates sand filled module location and weight of sand in pounds for each module. Module spacing is based on the greater diameter of the module.
2. All sand weights are nominal.
3. Temporary crash cushion arrays shall not encroach on the traveled way.
4. Place the Type P marker panel so that the bottom of the panel rests upon the pallet.
5. Refer to Standard Plan A73B for marker details.
6. Approach speeds indicated conform to NCHRP 350 Report criteria.
7. Use of pallets is optional.

STATE OF CALIFORNIA
DEPARTMENT OF TRANSPORTATION

TEMPORARY CRASH CUSHION, SAND FILLED (BIDIRECTIONAL)

NO SCALE

RSP T1B DATED JUNE 6, 2008 SUPERSEDES STANDARD PLAN T1B
DATED MAY 1, 2006 - PAGE 212 OF THE STANDARD PLANS BOOK DATED MAY 2006.

REVISED STANDARD PLAN RSP T1B

2006 REVISED STANDARD PLAN RSP T1B

5-15-08

DIST	COUNTY	ROUTE	POST MILES TOTAL PROJECT	SHEET NO.	TOTAL SHEETS
05	Mon	1	22.6/22.8	40	86

Randell D. Hiatt
REGISTERED CIVIL ENGINEER

June 6, 2008
PLANS APPROVAL DATE

REGISTERED PROFESSIONAL ENGINEER
Randell D. Hiatt
No. C50200
Exp. 6-30-09
CIVIL
STATE OF CALIFORNIA

The State of California or its officers or agents shall not be responsible for the accuracy or completeness of electronic copies of this plan sheet.

To accompany plans dated 8-16-10

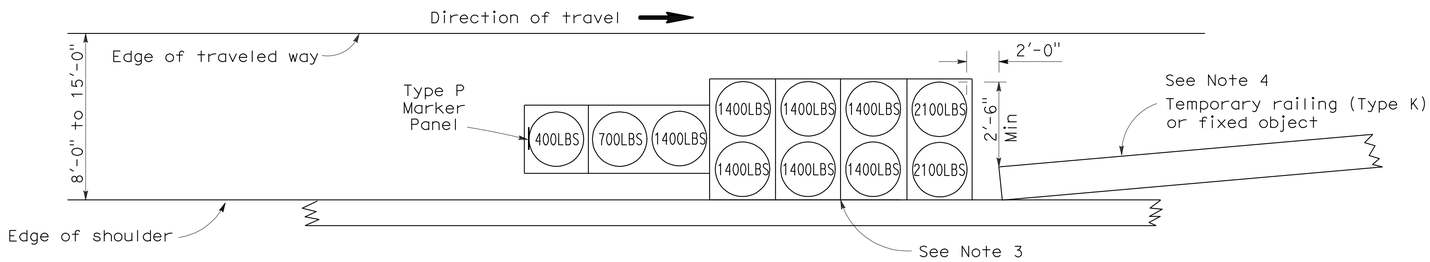

ARRAY 'TS11'

Approach speed less than 45 mph
See Note 9

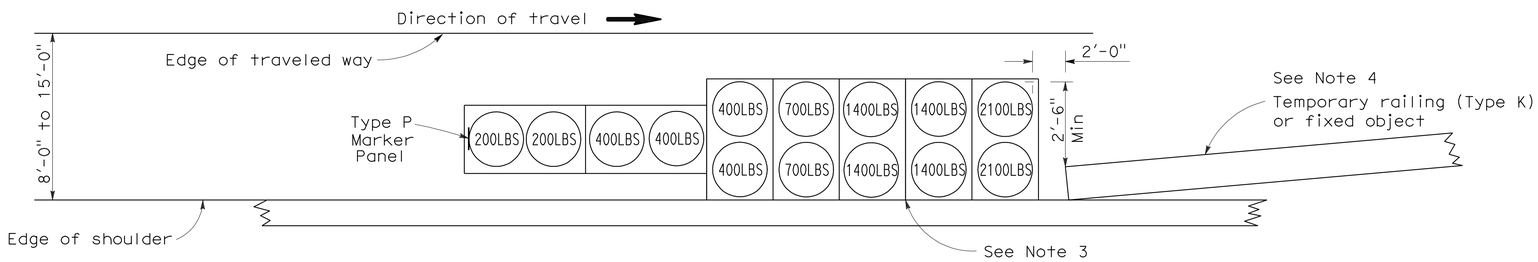

ARRAY 'TS14'

Approach speed 45 mph or more
See Note 9

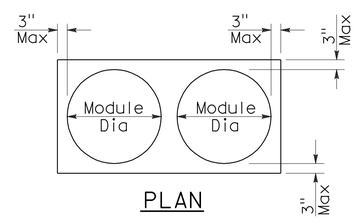

PLAN

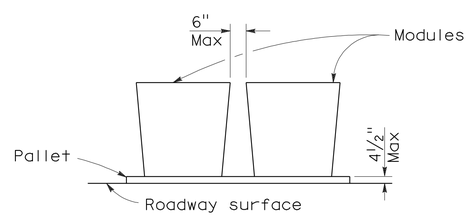

ELEVATION

CRASH CUSHION PALLET DETAIL

See Note 11

NOTES:

1. (XXX) Indicates sand filled module location and weight of sand in pounds for each module. Module spacing is based on the greater diameter of the module.
2. All sand weights are nominal.
3. The temporary crash cushion arrays shown on this plan shall be used only in locations where there will be traffic on one side of the temporary crash cushion array.
4. If the fixed object or approach end of the temporary railing is less than 15'-0" from the edge of traveled way, a temporary crash cushion is required in a construction or work zone.
5. Temporary crash cushion arrays shall not encroach on the traveled way.
6. Arrays for median shoulders shall conform to details shown on this plan for outside shoulders.
7. Place the Type P marker panel so that the bottom of the panel rests upon the pallet and faces traffic.
8. Refer to Standard Plan A73B for marker details.
9. For shoulder widths less than 8'-0", appropriate approved crash cushion protection, other than sand filled modules, shall be provided at fixed objects and at approach ends of temporary railing. The specific type of crash cushion shall be as shown on the project plans or as specified in the Special Provisions, or if not shown on the project plans or specified in the Special Provisions, shall be as approved by the Engineer.
10. Approach speeds indicated conform to NCHRP 350 Report criteria.
11. Use of pallets is optional.

STATE OF CALIFORNIA
DEPARTMENT OF TRANSPORTATION

TEMPORARY CRASH CUSHION, SAND FILLED (SHOULDER INSTALLATIONS)

NO SCALE

RSP T2 DATED JUNE 6, 2008 SUPERSEDES STANDARD PLAN T2
DATED MAY 1, 2006 - PAGE 213 OF THE STANDARD PLANS BOOK DATED MAY 2006.

REVISED STANDARD PLAN RSP T2

2006 REVISED STANDARD PLAN RSP T2

DIST	COUNTY	ROUTE	POST MILES TOTAL PROJECT	SHEET NO.	TOTAL SHEETS
05	Mon	1	22.6/22.8	41	86

LICENSED LANDSCAPE ARCHITECT

April 3, 2009
PLANS APPROVAL DATE

The State of California or its officers or agents shall not be responsible for the accuracy or completeness of electronic copies of this plan sheet.

LICENSED LANDSCAPE ARCHITECT — Robert B. Schott — Signature — 11-30-10 Renewal Date — 2-25-09 Date — STATE OF CALIFORNIA

To accompany plans dated 8-16-10

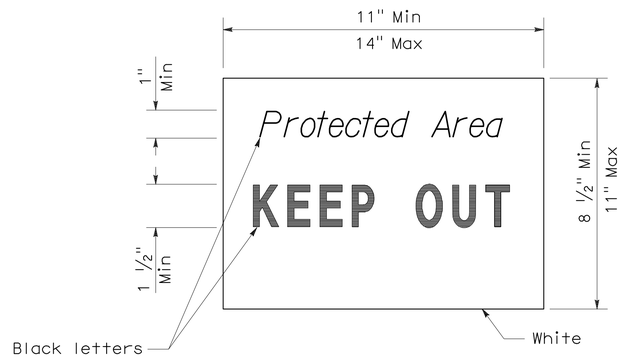

SIGN DETAIL

NOTE:

1. Temporary silt fence and temporary straw bale barrier shown for reference purposes only.

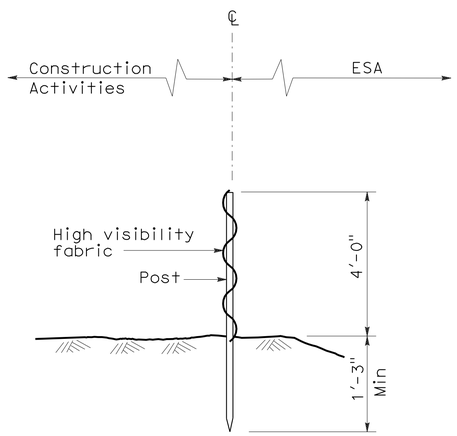

SECTION
TEMPORARY FENCE (TYPE ESA)

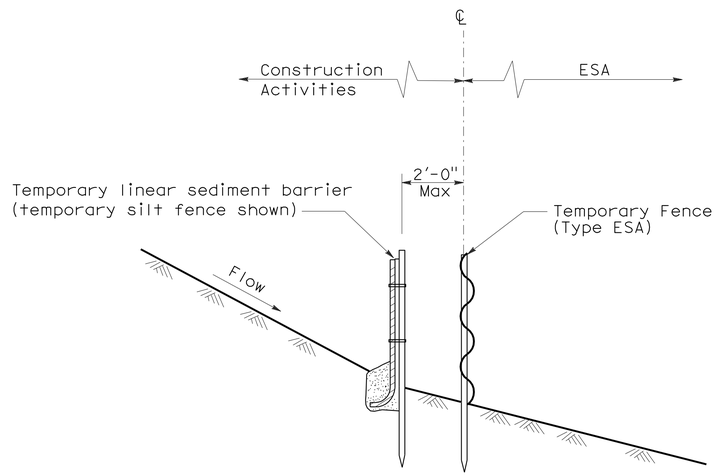

SECTION
PLACEMENT DETAIL
FOR TEMPORARY LINEAR SEDIMENT BARRIER
USED WITH TEMPORARY
FENCE (TYPE ESA)
(See Note 1)

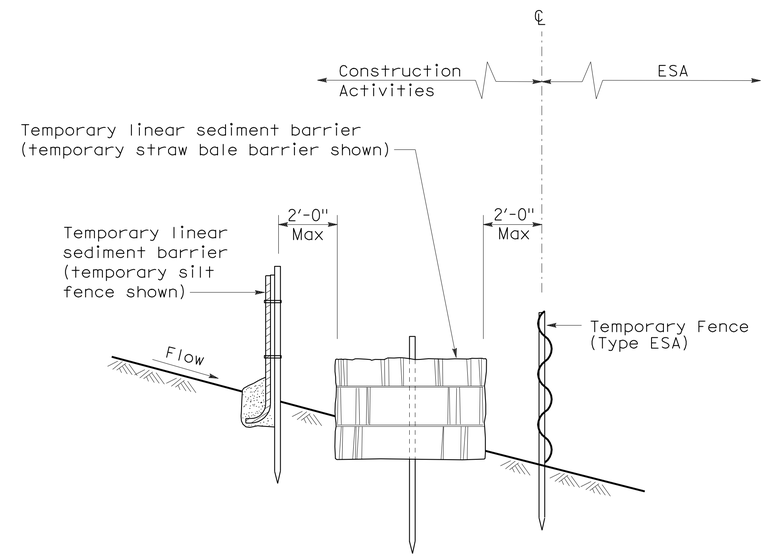

SECTION
PLACEMENT DETAIL
FOR TEMPORARY SILT FENCE
AND TEMPORARY STRAW BALE BARRIER
USED WITH TEMPORARY FENCE (TYPE ESA)
(See Note 1)

STATE OF CALIFORNIA
DEPARTMENT OF TRANSPORTATION

TEMPORARY WATER POLLUTION CONTROL DETAILS [TEMPORARY FENCE (TYPE ESA)]

NO SCALE

NSP T65 DATED APRIL 3, 2009 SUPPLEMENTS
THE STANDARD PLANS BOOK DATED MAY 2006.

NEW STANDARD PLAN NSP T65

2006 NEW STANDARD PLAN NSP T65

DIST	COUNTY	ROUTE	POST MILES TOTAL PROJECT	SHEET NO.	TOTAL SHEETS
05	Mon	1	22.6/22.8	42	86

REGISTERED ELECTRICAL ENGINEER

October 5, 2007
PLANS APPROVAL DATE

REGISTERED PROFESSIONAL ENGINEER Jeffery G. McRae No. E14512 Exp. 6-30-08 ELECTRICAL STATE OF CALIFORNIA

The State of California or its officers or agents shall not be responsible for the accuracy or completeness of electronic copies of this plan sheet.

To accompany plans dated 8-16-10

2006 REVISED STANDARD PLAN RSP ES-1A

ELECTROLIERS

STANDARD TYPES
15, 15D
15 STRUCTURE
21, 21D STRUCTURE
30
31
32
35
36-20A

High mast light pole

Double Arm lighting standard

Existing electrolier

Electrolier foundation (Future installation)

NOTES:

1. Luminaires shall be 310 W HPS when installed on Type 21, 21D, 30, 31, 32, 35 and 36-20A Standards, unless otherwise specified. Luminaires shall be 200 W HPS when installed on other type standards or poles, unless otherwise specified.
2. Luminaires shall be the cutoff type, ANSI Type Ⅲ medium cutoff lighting distribution, unless otherwise specified.
3. Variations noted adjacent to symbol on project plans.

Electrolier (see project notes or project plans)

Luminaire on wood pole

STANDARD NOTES:

- AB — Abandon. If applied to conduit, remove conductors.
- BC — Install pull box in existing conduit run.
- BP — Pedestrian barricade, type as indicated on plan.
- CB — Install conduit into existing pull box.
- CC — Connect new and existing conduit. Remove existing conductors and install conductors as indicated.
- CF — Conduit to remain for future use. Remove conductors. Install pull wire or rope.
- DH — Detector handhole.
- FA — Foundation to be abandoned.
- IS — Install sign on signal mast arm.
- NS — No slip base on standard.
- PEC — Photoelectric control.
- PEU — Photoelectric unit.
- RC — Equipment or material to be removed and become the property of the Contractor.
- RE — Remove electrolier, fuses and ballast. Tape ends of conductors.
- RL — Relocate equipment.
- RR — Remove and reuse equipment.
- RS — Remove and salvage equipment.
- SC — Splice new to existing conductors.
- SD — Service disconnect.
- SF — Standard to remain for future use. Remove luminaire, pole conductors, fuses and ballast.
- TSP — Telephone service point.

ABBREVIATIONS AND EQUIPMENT DESIGNATIONS

PROPOSED	EXISTING	
BBS	bbs	Battery backup system
BC	bc	Bolt circle
C	C	Conduit
CCTV	cctv	Closed circuit television
CKT	ckt	Circuit
CMS	cms	Changeable message sign
DLC	dlc	Loop detector lead-in cable
EMS	ems	Extinguishable message sign
EVC	evc	Emergency vehicle cable
EVD	evd	Emergency vehicle detector
FB	fb	Flashing beacon
FBCA	fbca	Flashing beacon control assembly
FBS	fbs	Flashing beacon with slip base
FO	fo	Fiber optic
G	G	Ground (Equipment Grounding Conductor)
GFCI	GFCI	Ground fault circuit interrupt
HAR	har	Highway advisory radio
HEX	hex	Hexagonal
HPS	hps	High pressure sodium
IISNS	iisns	Internally illuminated street name sign
ISL	isl	Induction sign lighting
LED	led	Light emitting diode
LMA	lma	Luminaire mast arm
LPS	lps	Low pressure sodium
LTG	ltg	Lighting
LUM	lum	Luminaire
MAT	mat	Mast arm mounting vehicle signal faces, top attachment
MAS	mas	Mast arm mounting vehicle signal faces, side attachment
MAS-4A	mas-4A	Mast arm mounting vehicle signal faces, side attachment - 4 signal section
MAS-4B	mas-4B	
MAS-4C	mas-4C	
MAS-5A	mas-5A	Mast arm mounting vehicle signal faces, side attachment - 5 signal section
MAS-5B	mas-5B	
MC	mc	Mercury contactor
M/M	m/m	Multiple to multiple transformer
MT	mt	Conduit with pull wire or rope only
MTG	mtg	Mounting
	mv	Mercury vapor lighting fixture
N	N	Neutral (Grounded Conductor)
NC	NC	Normally closed
NO	NO	Normally open
PB	pb	Pull box
PEC	pec	Photoelectric control (Type Ⅰ, Ⅱ, Ⅲ, Ⅳ or Ⅴ as shown)
PED	ped	Pedestrian
PEU	peu	Photoelectric unit
PPB	ppb	Pedestrian push button
RL		Relocated equipment
RM	rm	Ramp metering
SB	sb	Slip base
SIC	sic	Signal interconnect cable
SIG	sig	Signal
SMA	sma	Signal mast arm
SNS	sns	Street name sign
SP	sp	Service point
TDC	tdc	Telephone demarcation cabinet
TMS	tms	Traffic monitoring station
TOS	tos	Traffic Operations System
VEH	veh	Vehicle
XFMR	xfmr	Transformer
COMM	comm	Communication
RWIS	rwis	Roadway weather information system

SOFFIT AND WALL MOUNTED LUMINAIRES

Pendant, 70 W HPS unless otherwise specified.

Flush, 70 W HPS unless otherwise specified.

Wall surface, 70 W HPS unless otherwise specified.

Existing soffit or wall luminaire to remain unmodified.

Existing soffit or wall luminaire to be modified as specified.

NOTE:

Arrow indicates "street side" of luminaire.

STATE OF CALIFORNIA
DEPARTMENT OF TRANSPORTATION

ELECTRICAL SYSTEMS (SYMBOLS AND ABBREVIATIONS)

NO SCALE

RSP ES-1A DATED OCTOBER 5, 2007 SUPERSEDES STANDARD PLAN ES-1A
DATED MAY 1, 2006 - PAGE 400 OF THE STANDARD PLANS BOOK DATED MAY 2006.

REVISED STANDARD PLAN RSP ES-1A

DIST	COUNTY	ROUTE	POST MILES TOTAL PROJECT	SHEET NO.	TOTAL SHEETS
05	Mon	1	22.6/22.8	43	86

REGISTERED ELECTRICAL ENGINEER

October 5, 2007
PLANS APPROVAL DATE

REGISTERED PROFESSIONAL ENGINEER
Jeffery G. McRae
No. E14512
Exp. 6-30-08
ELECTRICAL
STATE OF CALIFORNIA

The State of California or its officers or agents shall not be responsible for the accuracy or completeness of electronic copies of this plan sheet.

To accompany plans dated 8-16-10

CONDUIT

PROPOSED	EXISTING	
		Lighting Conduit, unless otherwise indicated or noted
		Traffic signal conduit
C	c	Communication conduit
T	t	Telephone conduit
F	f	Fire alarm conduit
FO	fo	Fiber optic conduit
		Conduit termination (RSP ES-9A C)
R	r	Conduit riser in/on structure or service pole

SERVICE EQUIPMENT

PROPOSED	EXISTING	
OH	oh	Overhead lines
U	U	Wood pole "U" indicates utility owned
		Pole guy with anchor
		Utility transformer - ground mounted
III		Service equipment enclosure type
		Service equipment enclosure door indicates front of enclosure
T	t	Telephone demarcation cabinet

POLE-MOUNTED SERVICE DESIGNATION

Type of installation

TYPE H SERVICE - 28'-10" ← Pole height above grade

ILLUMINATED OVERHEAD SIGN

PROPOSED	EXISTING	
		Overhead sign - Single post
		Overhead sign - Two post
		Overhead sign - Mounted on structure
		Overhead sign with electrolier

SIGNAL EQUIPMENT

PROPOSED	EXISTING	
		Pedestrian signal face
		Pedestrian push button post
		Pedestrian barricade
		Vehicle signal face (with backplate, 3-Section: red, yellow and green)
		Vehicle signal face with angle visors
PV	PV	Modifications of basic symbols: "L" indicates all non-arrow sections louvered "LG" indicates louvered green section only "PV" indicates 12" programmed visibility sections "8" indicates all 8" sections (only when specified)
		Type 15TS and Vehicle signal face
		Vehicle signal face with red, yellow and green left arrow sections
		Vehicle signal face with red and yellow sections and up green arrow
		Vehicle signal face (5 Section) with red, yellow and green sections and yellow and green right arrows
		Type 1 Standard and attached vehicle signal faces
		Standard with signal mast arm only and attached vehicle signal faces and internally illuminated street name sign
		Type 33 Standard, Left-turn vehicle signal face and sign
		Standard with luminaire and signal mast arms and attached vehicle signal faces
		Cantilever flashing beacon Type 9 Frame, with a sign unless otherwise specified or indicated
		Type 15-FBS Standard with two vehicle signal face sections with lens, backplate and visor with a sign
R	Y	Flashing beacon. One vehicle signal face section with lens, backplate and visor. "R" indicates red indication, "Y" indicates yellow indication
		Controller assembly. Door indicates front of cabinet

SIGNAL EQUIPMENT Cont

PROPOSED	EXISTING	
		Guard post
		Type 1 Standard with "Meter On" sign
		Emergency Vehicle detector

NOTES:

1. All signal sections shall be 12" unless shown otherwise.
2. Signal heads shall be provided with backplates unless shown otherwise.
3. Signal indication shall be LED.

STATE OF CALIFORNIA
DEPARTMENT OF TRANSPORTATION

ELECTRICAL SYSTEMS (SYMBOLS AND ABBREVIATIONS)

NO SCALE

RSP ES-1B DATED OCTOBER 5, 2007 SUPERCEDES STANDARD PLAN ES-1B DATED MAY 1, 2006 - PAGE 401 OF THE STANDARD PLANS BOOK DATED MAY 2006.

REVISED STANDARD PLAN RSP ES-1B

2006 REVISED STANDARD PLAN RSP ES-1B

DIST	COUNTY	ROUTE	POST MILES TOTAL PROJECT	SHEET NO.	TOTAL SHEETS
05	Mon	1	22.6/22.8	44	86

REGISTERED ELECTRICAL ENGINEER

October 5, 2007
PLANS APPROVAL DATE

REGISTERED PROFESSIONAL ENGINEER Jeffery G. McRae No. E14512 Exp. 6-30-08 ELECTRICAL STATE OF CALIFORNIA

The State of California or its officers or agents shall not be responsible for the accuracy or completeness of electronic copies of this plan sheet.

To accompany plans dated 8-16-10

2006 REVISED STANDARD PLAN RSP ES-1C

EQUIPMENT IDENTIFICATION

ILLUMINATED SIGN IDENTIFICATION NUMBER:

Sign No. 12345 — Sign number - Place on post or structure

10 ISL SCI 1.0

- Transformer rating (kVA)
- Lighting control type
- Number and type of fixtures

Do NOT place on standard or structure

ELECTROLIER OR EQUIPMENT IDENTIFICATION NUMBER:

12345 - 15'-0"

- Mast arm length, if shown. Do not place on standard or structure.
- Equipment number - Place on standard or structure. Existing equipment numbers are shown in parenthesis

CONDUIT AND CONDUCTOR IDENTIFICATION:

1½"C, 2#10, 15#14, 2 DLC

- Number and size of conductors and cables
- Size of conduit in inches

Ø1, Ø2, Ø2P, etc.	Traffic phase identification for signal faces, detectors and phase diagrams
1 2 3	Project note numbers
A B C	Equipment description, installation or item numbers
1 2 3	Conduit run numbers

SIGNAL AND LIGHTING STANDARD (TYPICAL DESIGNATION):

19A - 3 - 100

- Wind velocity = 100 mph
- Case 3 arm loading
- Standard type
- Standard Plan sheet number
- Detail number or letter

MISCELLANEOUS EQUIPMENT

PROPOSED	EXISTING	
CMS	cms	Changeable message sign
		Closed circuit television camera
		Highway advisory radio pole and antenna
EMS	ems	Extinguishable message sign
M V	m v	Detection device M = Microwave sensor V = Video image sensor

WIRING DIAGRAM LEGEND

P	Pole
CB	Circuit breaker
A	Ampere
V	Volt
M	Metered
UM	Unmetered
NB	Neutral bus
GB	Ground bus
G	Equipment grounding conductor
N	Grounded conductor (Neutral)

- External conductor
- Conductor or bus
- Tie point
- Contactor coil
- Contactor, Contact NO
- Terminal blocks
- Contactor, Contact NC
- Enclosure bond
- Grounding electrode
- Circuit breaker
- Receptacle

PULL BOXES

PROPOSED EXISTING

Pull box-No. 5 unless otherwise indicated or noted.

3 — 9A(21)

Pull box-Additional designations or descriptions

3	= No. 3½ pull box
5	= No. 5 pull box
6	= No. 6 pull box
7	= No. 7 (Ceiling pull box)
8	= No. 8 (Pendant soffit pull box)
9	= No. 9 pull box
9A	= No. 9A pull box

(C)	= Communications pull box
(E)	= Pull box with extension
(S)	= Sprinkler control pull box
(21)	= Anchor bolts and conduit for future installation of Type 21 Standard
(T)	= Traffic pull box

VEHICLE DETECTORS

5 J 9 U

- Vehicle detector designation
- U = Upper
  L = Lower
- Slot number in input file
- Input file (I or J)
- Phase

PROPOSED EXISTING

	Type A detector loop. Outline of sawcut shown.
	Type B detector loop. Outline of sawcut shown.
	Type C detector loop. Outline of sawcut shown.
	Type D detector loop. Outline of sawcut shown.
	Type E detector loop. Outline of sawcut shown.
	Type Q detector loop. Outline of sawcut shown.
	Magnetic detector
DH / dh	Detector handhole
	Microwave or video detection zone

STATE OF CALIFORNIA
DEPARTMENT OF TRANSPORTATION

ELECTRICAL SYSTEMS (SYMBOLS AND ABBREVIATIONS)

NO SCALE

RSP ES-1C DATED OCTOBER 5, 2007 SUPERCEDES STANDARD PLAN ES-1C DATED MAY 1, 2006 - PAGE 402 OF THE STANDARD PLANS BOOK DATED MAY 2006.

REVISED STANDARD PLAN RSP ES-1C

DIST	COUNTY	ROUTE	POST MILES TOTAL PROJECT	SHEET NO.	TOTAL SHEETS
05	Mon	1	22.6/22.8	45	86

REGISTERED ELECTRICAL ENGINEER

June 6, 2008
PLANS APPROVAL DATE

REGISTERED PROFESSIONAL ENGINEER
Jeffery G. McRae
No. E14512
Exp. 6-30-10
ELECTRICAL
STATE OF CALIFORNIA

The State of California or its officers or agents shall not be responsible for the accuracy or completeness of electronic copies of this plan sheet.

To accompany plans dated 8-16-10

VISORS

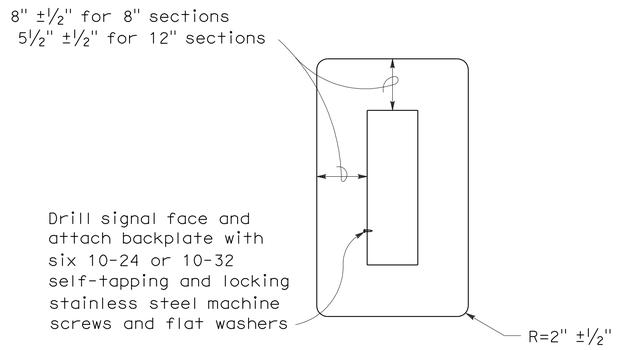

8" AND 12" SECTIONS

BACKPLATE

1/16" minimum thickness
3001-14 aluminum, or plastic when specified

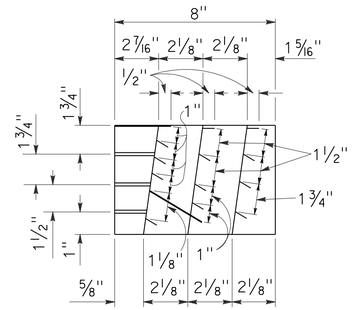

SECTION A-A

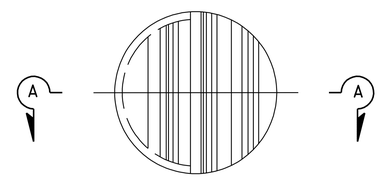

FRONT VIEW

DIRECTIONAL LOUVER

Directional louvers shall be oriented as directed by the Engineer and secured in place with one plated brass machine screw and nut.

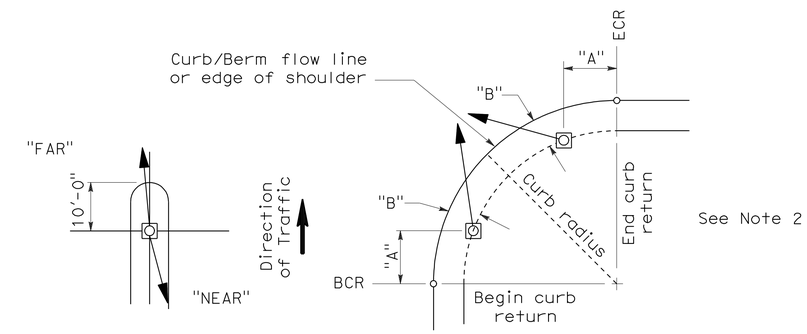

NOTES:

1. Typical signal pole placement unless dimensioned on plans.
2. For "A" and "B" dimensions, see Pole Schedule, or as directed by the Engineer.

SIGNAL STANDARD PLACEMENT DIMENSIONS AND EQUIPMENT LOCATIONS

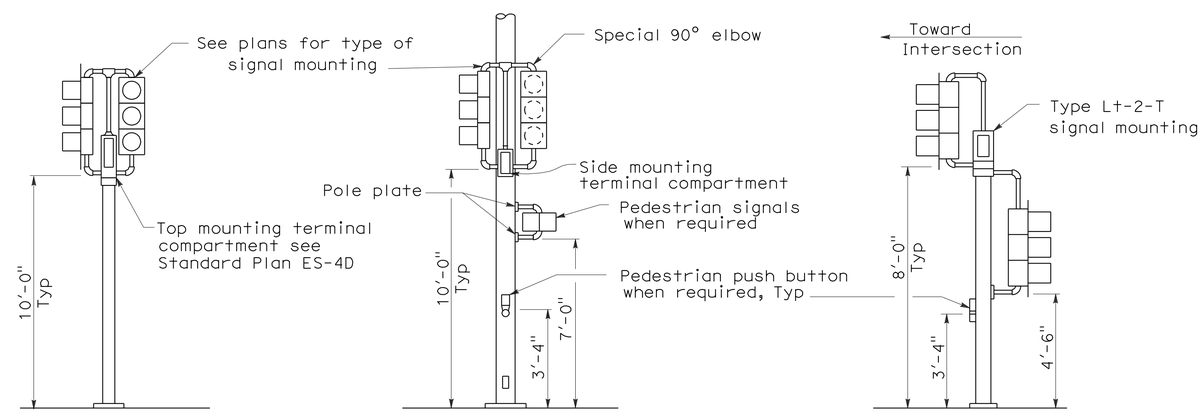

TOP MOUNTED SIGNALS (TV)

Type 1-A, 1-B, 1-C and 1-D standard as indicated on the plans

SIDE MOUNTED SIGNALS (SV AND SP)

Normally used on standards with luminaire or signal mast arm

LEFT TURN LANE SIGNAL

Type 1-A, 1-B, 1-C and 1-D standard as indicated on plans

TYPICAL SIGNAL INSTALLATIONS

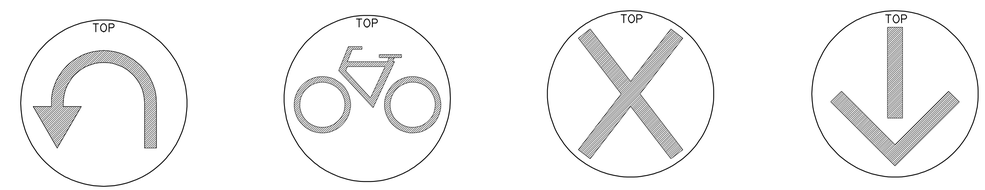

U-TURN SIGNAL FACE | BICYCLE SIGNAL FACE | LANE CONTROL SIGNAL FACE | LANE CONTROL SIGNAL FACE

STATE OF CALIFORNIA
DEPARTMENT OF TRANSPORTATION

ELECTRICAL SYSTEMS (SIGNAL HEADS AND MOUNTINGS)

NO SCALE

RSP ES-4C DATED JUNE 6, 2008 SUPERSEDES STANDARD PLAN ES-4C DATED MAY 1, 2006 - PAGE 420 OF THE STANDARD PLANS BOOK DATED MAY 2006.

REVISED STANDARD PLAN RSP ES-4C

2006 REVISED STANDARD PLAN RSP ES-4C

5-19-08

DIST	COUNTY	ROUTE	POST MILES TOTAL PROJECT	SHEET NO.	TOTAL SHEETS
05	Mon	1	22.6/22.8	46	86

REGISTERED ELECTRICAL ENGINEER

June 6, 2008
PLANS APPROVAL DATE

REGISTERED PROFESSIONAL ENGINEER Jeffery G. McRae No. E14512 Exp. 6-30-10 ELECTRICAL STATE OF CALIFORNIA

The State of California or its officers or agents shall not be responsible for the accuracy or completeness of electronic copies of this plan sheet.

To accompany plans dated 8-16-10

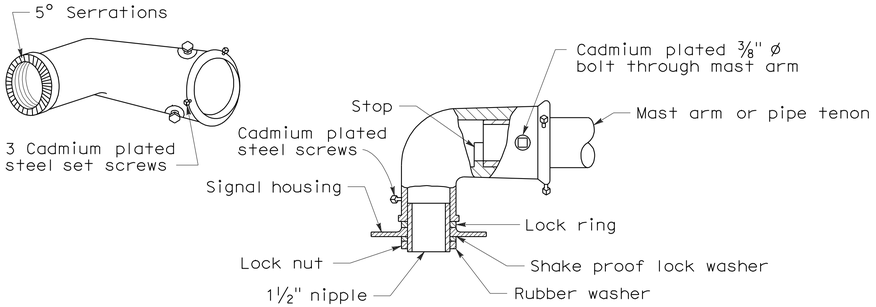

MAST ARM MOUNTING - TYPE "MAT"

For 2 NPS pipe, see Note 1.

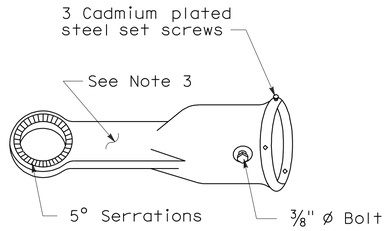

MAST ARM MOUNTING - TYPE "MAS"

For 2 NPS pipe. See Note 1.

SIGNAL SLIP FITTERS

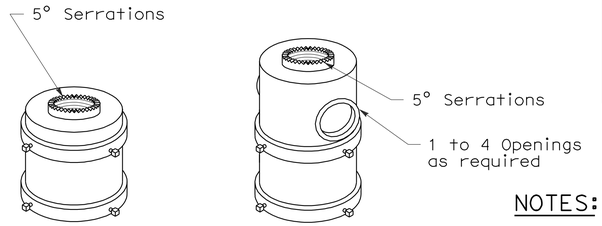

For one mounting For mulitiple mountings

TOP MOUNTINGS

For 4 NPS pipe, see Note 2.

NOTES:

1. After mast arm signal has been plumbed and secured, drill 7/16" hole through mast arm tenon in line with slip fitter hole. Place a cadmium plated 3/8" ø galvanized bolt with washer under bolt head through hole and secure with washer, nut, and locknut. Seal openings between mast arm mountings and mast arm with mastic.
2. (a) Threaded top mounted slip fitter openings shall be 1½ NPS.
   (b) Serrations in fittings shall match those on bottom of signal heads or in lock ring.
   (c) Top opening shall be offset when backplate is used.
3. Wireway shall have a cross section area of 0.95 square inch minimum. Minimum width of ½".

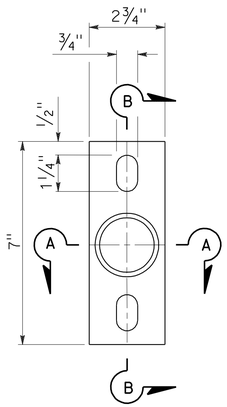

POLE PLATE

For side mountings

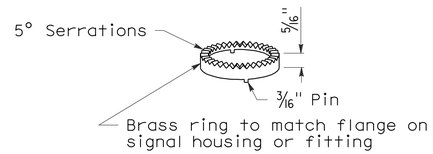

LOCK RING

Use where locking ring is not integral with signal housing or fitting.

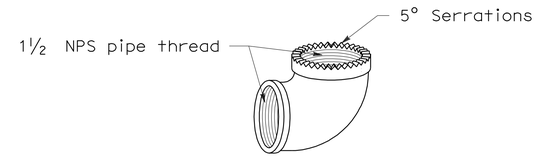

SPECIAL 90° ELBOW

One for each signal head, except those with special slip fitter mounting

MISCELLANEOUS MOUNTING HARDWARE

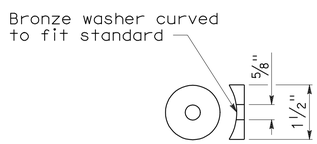

DETAIL "C"

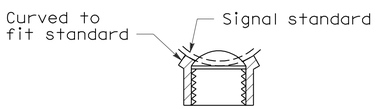

SECTION A-A

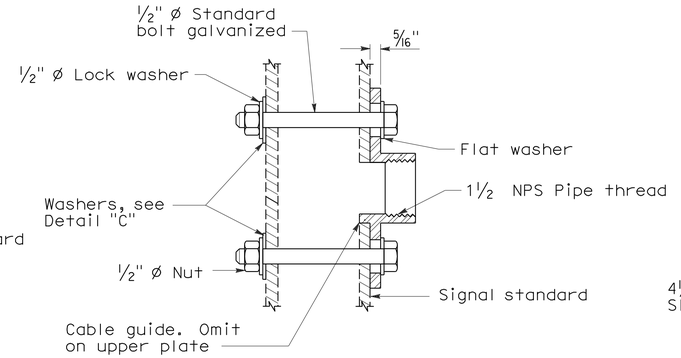

SECTION B-B

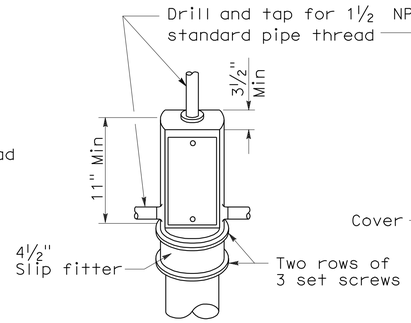

TOP MOUNTING

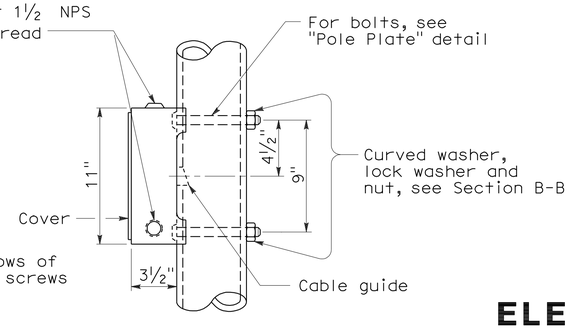

SIDE MOUNTING

TERMINAL COMPARTMENTS

STATE OF CALIFORNIA
DEPARTMENT OF TRANSPORTATION

ELECTRICAL SYSTEMS (SIGNAL HEADS AND MOUNTINGS)

NO SCALE

RSP ES-4D DATED June 6, 2008 SUPERSEDES STANDARD PLAN ES-4D
DATED MAY 1, 2006 - PAGE 421 OF THE STANDARD PLANS BOOK DATED MAY 2006.

REVISED STANDARD PLAN RSP ES-4D

2006 REVISED STANDARD PLAN RSP ES-4D

5-19-08

DIST	COUNTY	ROUTE	POST MILES TOTAL PROJECT	SHEET NO.	TOTAL SHEETS
05	Mon	1	22.6/22.8	47	86

REGISTERED ELECTRICAL ENGINEER

October 5, 2007
PLANS APPROVAL DATE

REGISTERED PROFESSIONAL ENGINEER Jeffery G. McRae No. E14512 Exp. 6-30-08 ELECTRICAL STATE OF CALIFORNIA

The State of California or its officers or agents shall not be responsible for the accuracy or completeness of electronic copies of this plan sheet.

To accompany plans dated 8-16-10

LOOP INSTALLATION PROCEDURE

1. Loops shall be centered in lanes.
2. Saw slots in pavement for loop conductors as shown in details.
3. Distance between side of loop and a lead-in saw cut from adjacent detectors shall be 2'-0" minimum. Distance between lead-in saw cuts shall be 6" minimum.
4. Bottom of saw slot shall be smooth with no sharp edges.
5. Slots shall be washed until clean, blown out and thoroughly dried before installing loop conductors.
6. Adjacent loops on the same sensor unit channel shall be wound in opposite directions.
7. Identify and tag loop circuit pairs in the pull box with loop number, start (S) and finish (F) of conductor. Identify and tag lead-in-cable with sensor number and phase.
8. Install loop conductor in slot using a 3/16" to 1/4" thick wood paddle. Hold loop conductors with wood paddles (at the bottom of the sawed slot) during sealant placement.
9. No more than 2 twisted pairs shall be installed in one sawed slot.
10. Allow additional 5'-0" of slack length of conductor for the lead-in run to pull box.
11. The additional length of each conductor for each loop shall be twisted together into a pair (6 turns per 3'-4" minimum) before being placed in the slot and conduit leading to pull box.
12. Test each loop circuit for continuity, circuit resistance and insulation resistance at the pull box before filling slots.
13. Fill slots as shown in details.
14. Splice loop conductors to lead-in-cable. Splices shall be soldered.
15. End of lead-in-cable and Type 2 loop conductor shall be waterproofed prior to installing in conduit to prevent moisture from entering the cable.
16. Lead-in-cable shall not be spliced between the pull box and the controller cabinet terminals.
17. Test each loop circuit for continuity, circuit resistance and insulation resistance at the controller cabinet location.
18. Where loop conductors are not to be spliced to a lead-in-cable, the ends of the conductors shall be taped and waterproofed with electrical insulating coating.

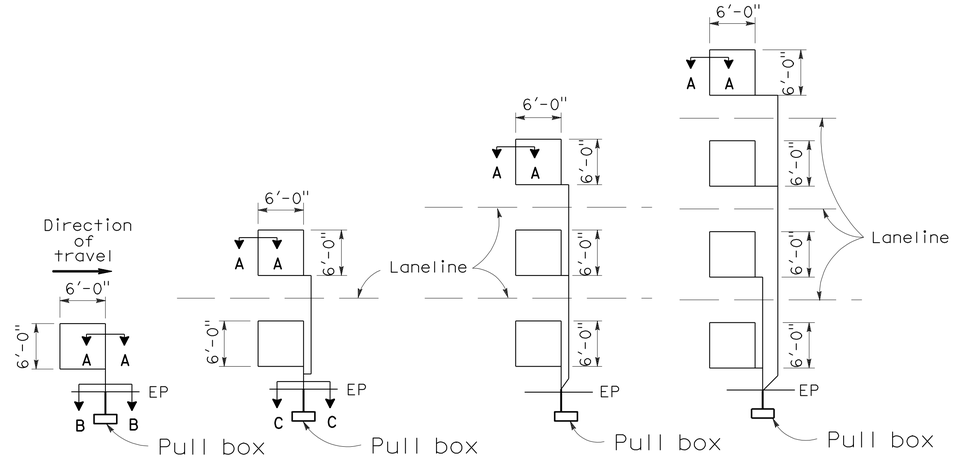

TYPE 1A INSTALLATION | TYPE 2A INSTALLATION | TYPE 3A INSTALLATION | TYPE 4A INSTALLATION

SAWCUT DETAILS

(Type A loop detector configurations illustrated)

1. 1A thru 4A = 1 Type A loop configuration in each lane.
2. 1B thru 4B = 1 Type B loop configuration in each lane.
3. 1C = 1 Type C loop configuration entering lanes as required.
4. 1D thru 4D = 1 Type D loop configuration in each lane.
5. 1E thru 4E = 1 Type E loop configuration in each lane.
6. 1Q thru 4Q = 1 Type Q loop configuration in each lane. (Use Type A, B, C, D, E or Q loop detector configurations only when specified or shown on plans)

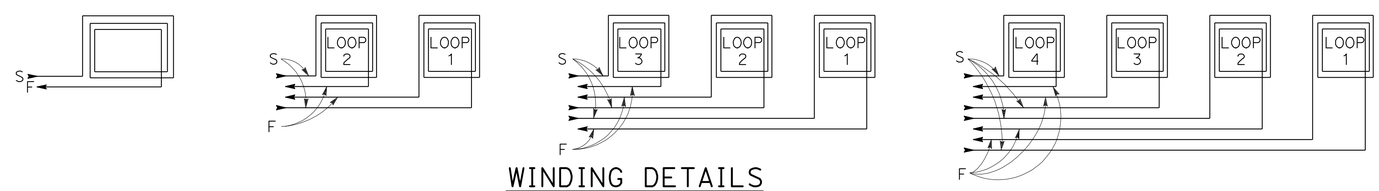

WINDING DETAILS

See Notes 6 and 7

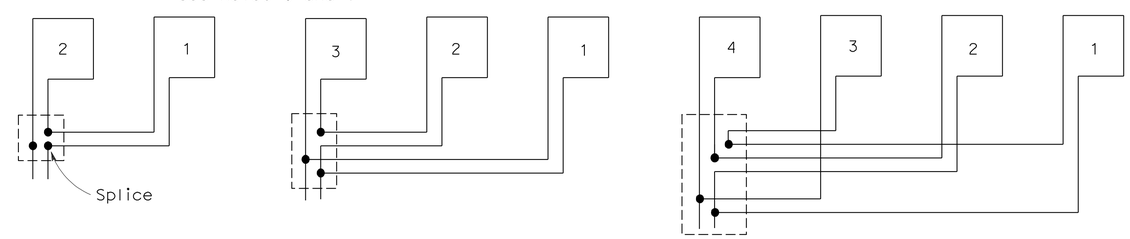

TYPICAL LOOP CONNECTIONS

(Dashed lines represent the pull box)

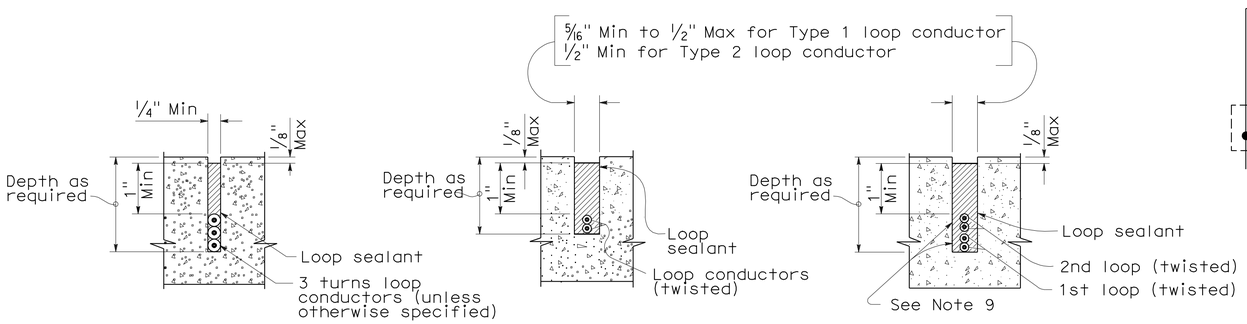

SECTION A-A | SECTION B-B | SECTION C-C

SLOT DETAILS - TYPE 1 AND TYPE 2 LOOP CONDUCTOR

STATE OF CALIFORNIA
DEPARTMENT OF TRANSPORTATION

ELECTRICAL SYSTEMS (DETECTORS)

NO SCALE

RSP ES-5A DATED OCTOBER 5, 2007 SUPERCEDES STANDARD PLAN ES-5A DATED MAY 1, 2006 - PAGE 423 OF THE STANDARD PLANS BOOK DATED MAY 2006.

REVISED STANDARD PLAN RSP ES-5A

2006 REVISED STANDARD PLAN RSP ES-5A

DIST	COUNTY	ROUTE	POST MILES TOTAL PROJECT	SHEET No	TOTAL SHEETS
05	Mon	1	22.6/22.8	48	86

REGISTERED CIVIL ENGINEER 07-28-10 DATE

8-16-10
PLANS APPROVAL DATE

REGISTERED PROFESSIONAL ENGINEER Don L. Nguyen-Tan No. C057510 Exp. 12-31-2011 CIVIL STATE OF CALIFORNIA

The State of California or its officers or agents shall not be responsible for the accuracy or completeness of electronic copies of this plan sheet.

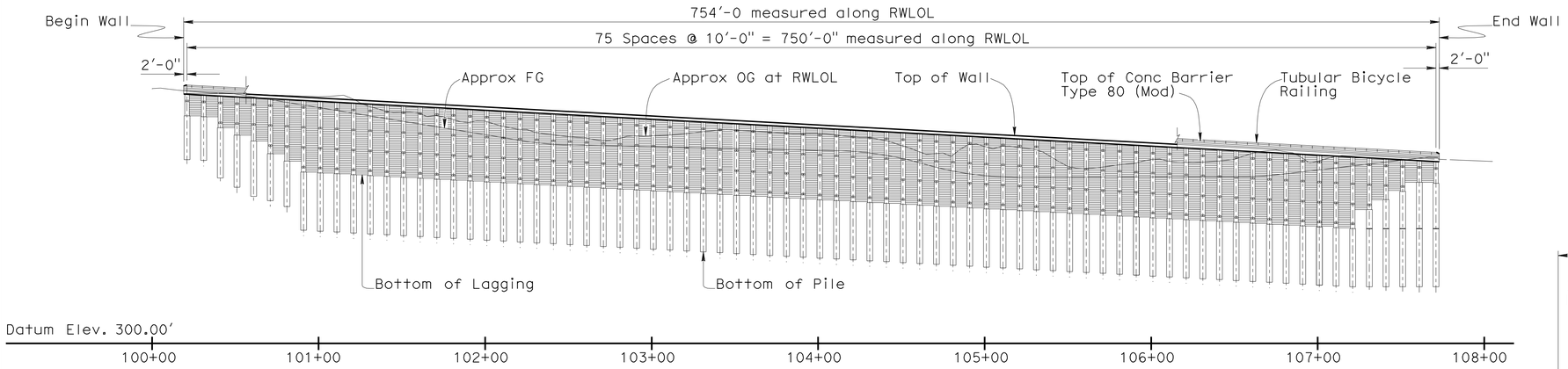

DEVELOPED MIRROR ELEVATION

1" = 40'

CURVE DATA			
R	Δ	T	L
1042.19	2°45'41"	25.12	50.23
816.00	17°51'29"	128.21	254.33
1058.19	12°12'07"	113.11	225.36
800.00	17°51'29"	125.69	249.34
1524.42	14°35'44"	195.22	388.34
1508.42	14°35'44"	193.18	384.26

QUANTITIES

STRUCTURE EXCAVATION (SOLDIER PILE WALL)	2,700	CY
STRUCTURE BACKFILL (SOLDIER PILE WALL)	412	CY
CONCRETE BACKFILL	967	CY
LEAN CONCRETE BACKFILL	1,116	CY
INSTALL STEEL SOLDIER PILE	152	EA
42" DRILLED HOLE	5,405	LF
TIEBACK ANCHOR	279	EA
STRUCTURAL CONCRETE, BARRIER SLAB	600	CY
BAR REINFORCING STEEL (EPOXY COATED)	117,223	LB
INTEGRAL COLORED SHOTCRETE	370	CY
DECK SEAL	7,917	SQFT
TIMBER LAGGING	147	MFBM
TUBULAR BICYCLE RAILING	754	LF
CONCRETE BARRIER (TYPE 80 MODIFIED)	754	LF

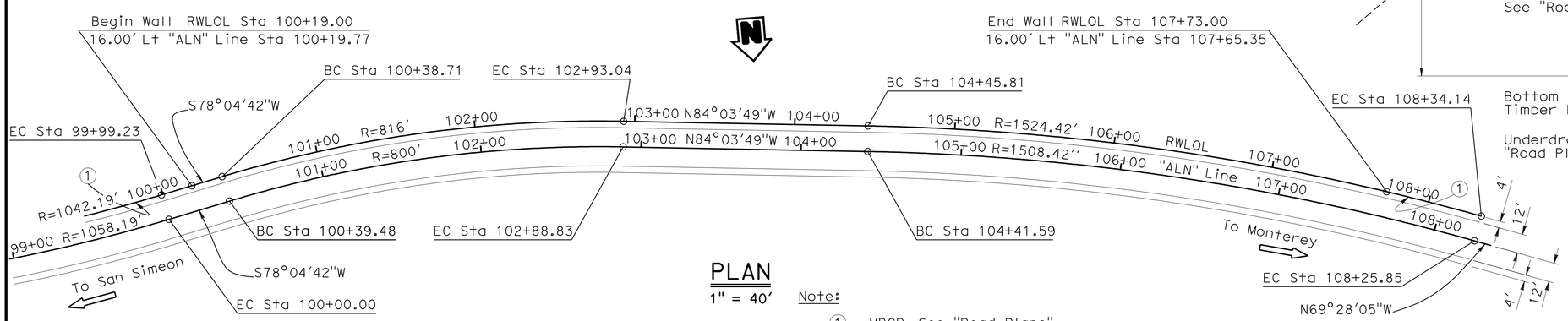

PLAN

1" = 40'

Note:

(1) MBGR, See "Road Plans"

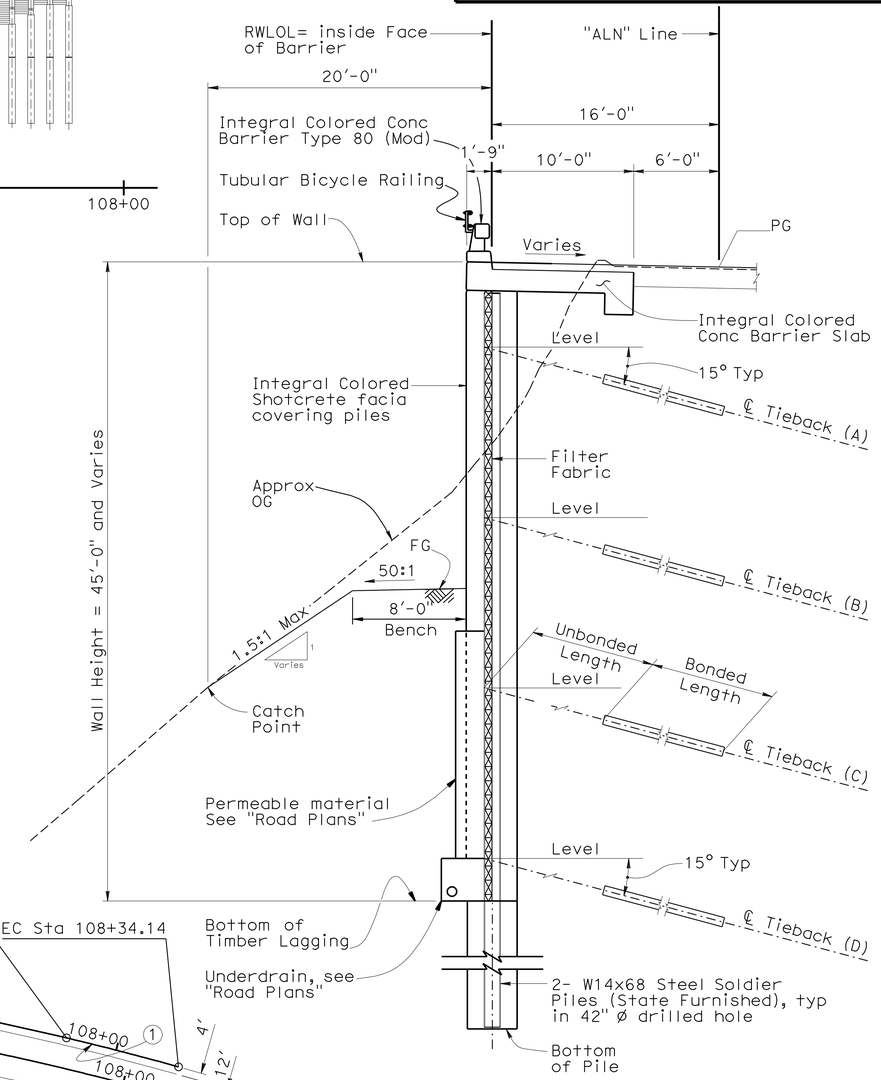

TYPICAL SECTION

3/16" = 1'-0"

Fritz Hoffman DESIGN ENGINEER	DESIGN	BY D. Nguyen-Tan	CHECKED R. Melko	LOAD & RESISTANCE FACTOR DESIGN	LIVE LOADING: HL93 W/"LOW-BOY"; PERMIT DESIGN VEHICLE
	DETAILS	BY K. Chonkria	CHECKED D. Nguyen-Tan	LAYOUT BY K. Chonkria	CHECKED D. Nguyen-Tan
	QUANTITIES	BY R. Melko	CHECKED H. Tuazon	SPECIFICATIONS BY V. Renganathan	PLANS AND SPECS COMPARED D. Nguyen-Tan

STATE OF CALIFORNIA
DEPARTMENT OF TRANSPORTATION

DIVISION OF ENGINEERING SERVICES
STRUCTURE DESIGN
DESIGN BRANCH 6

BRIDGE NO. 44E0100
POST MILE 22.6/22.8

DANI CREEK RETAINING WALL
GENERAL PLAN

ORIGINAL SCALE IN INCHES FOR REDUCED PLANS 0 1 2 3

CU 05 PROJECT ID 0500020037
EA 0T5601

DISREGARD PRINTS BEARING EARLIER REVISION DATES

REVISION DATES: 06-25-10 07-01-10 07/12/10 07-15-10 07-23-10 07-28-10

SHEET 1 OF 39

STRUCTURES DESIGN GENERAL PLAN SHEET (ENGLISH) (REV.07-24-06)

FILE => ot5601-a-gp.dgn

USERNAME => trmnguye DATE PLOTTED => 24-AUG-2010 TIME PLOTTED => 10:36

DIST	COUNTY	ROUTE	POST MILES TOTAL PROJECT	SHEET No	TOTAL SHEETS
05	Mon	1	22.6/22.8	49	86

REGISTERED CIVIL ENGINEER 07-28-10 DATE

8-16-10
PLANS APPROVAL DATE

REGISTERED PROFESSIONAL ENGINEER Don L. Nguyen-Tan No. C057510 Exp. 12-31-2011 CIVIL STATE OF CALIFORNIA

The State of California or its officers or agents shall not be responsible for the accuracy or completeness of electronic copies of this plan sheet.

Finished Grade Profile		
	Description	Elevation
Ⓐ	VP RWLOL Sta 100+49	450

Note:

1. Radius of vertical curves for FG profile = 200′
2. Finish grade may be adjusted by the Contractor upon approval of the Engineer to balance excavation and backfill of material

STATE FURNISHED MATERIAL		
Quantity	Length	Description
138	83′-0"	W14X68
3	70′-0"	W14X68
5	60′-4"	W14X68
4	50′-0"	W14X68
2	40′-0"	W14X68

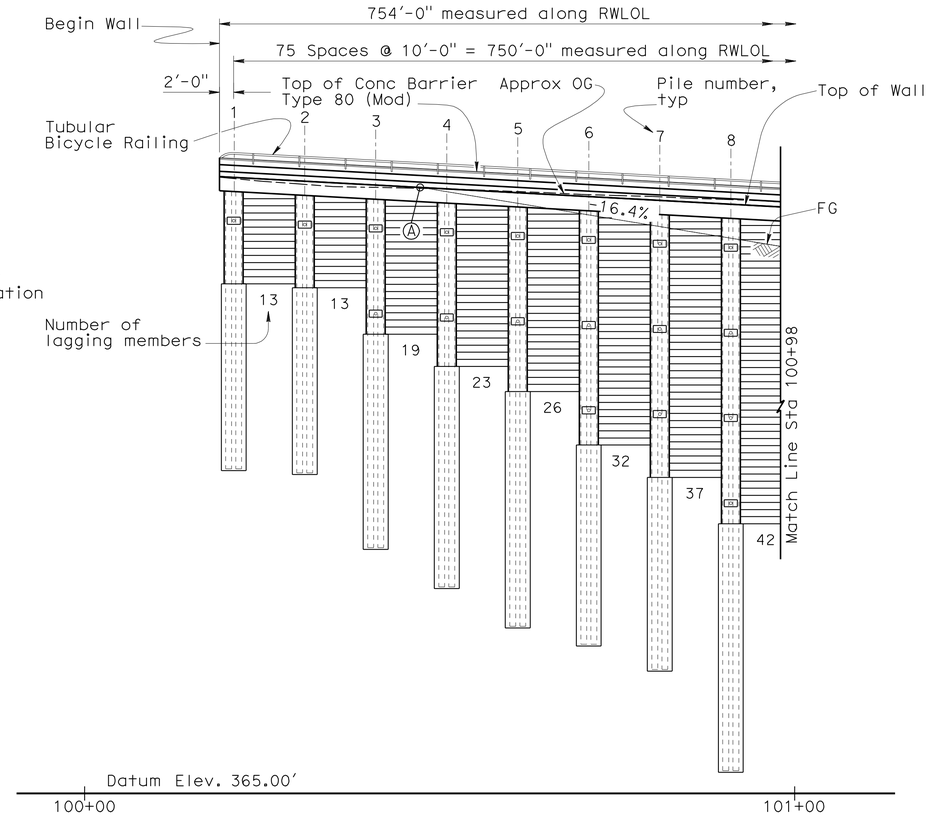

DEVELOPED MIRROR ELEVATION

RSP B11-60

3/32" = 1′

INDEX TO PLANS

SHEET No.	TITLE	SHEET No.	TITLE
1	General Plan	26	Log of Test Boring 12 of 25
2	Structure Plan No. 1	27	Log of Test Boring 13 of 25
3	Structure Plan No. 2	28	Log of Test Boring 14 of 25
4	Structure Plan No. 3	29	Log of Test Boring 15 of 25
5	Structure Plan No. 4	30	Log of Test Boring 16 of 25
6	Foundation Plan No. 1	31	Log of Test Boring 17 of 25
7	Foundation Plan No. 2	32	Log of Test Boring 18 of 25
8	Typical Section	33	Log of Test Boring 19 of 25
9	Details No. 1	34	Log of Test Boring 20 of 25
10	Details No. 2	35	Log of Test Boring 21 of 25
11	Details No. 3	36	Log of Test Boring 22 of 25
12	Details No. 4	37	Log of Test Boring 23 of 25
13	Details No. 5	38	Log of Test Boring 24 of 25
14	Tubular Bicycle Railing	39	Log of Test Boring 25 of 25
15	Log of Test Boring 1 of 25		
16	Log of Test Boring 2 of 25		
17	Log of Test Boring 3 of 25		
18	Log of Test Boring 4 of 25		
19	Log of Test Boring 5 of 25		
20	Log of Test Boring 6 of 25		
21	Log of Test Boring 7 of 25		
22	Log of Test Boring 8 of 25		
23	Log of Test Boring 9 of 25		
24	Log of Test Boring 10 of 25		
25	Log of Test Boring 11 of 25		

CURVE DATA			
R	Δ	T	L
1042.19	2°45′41"	25.12	50.23
816.00	17°51′29"	128.21	254.33
1058.19	12°12′07"	113.11	225.36
800.00	17°51′29"	125.69	249.34

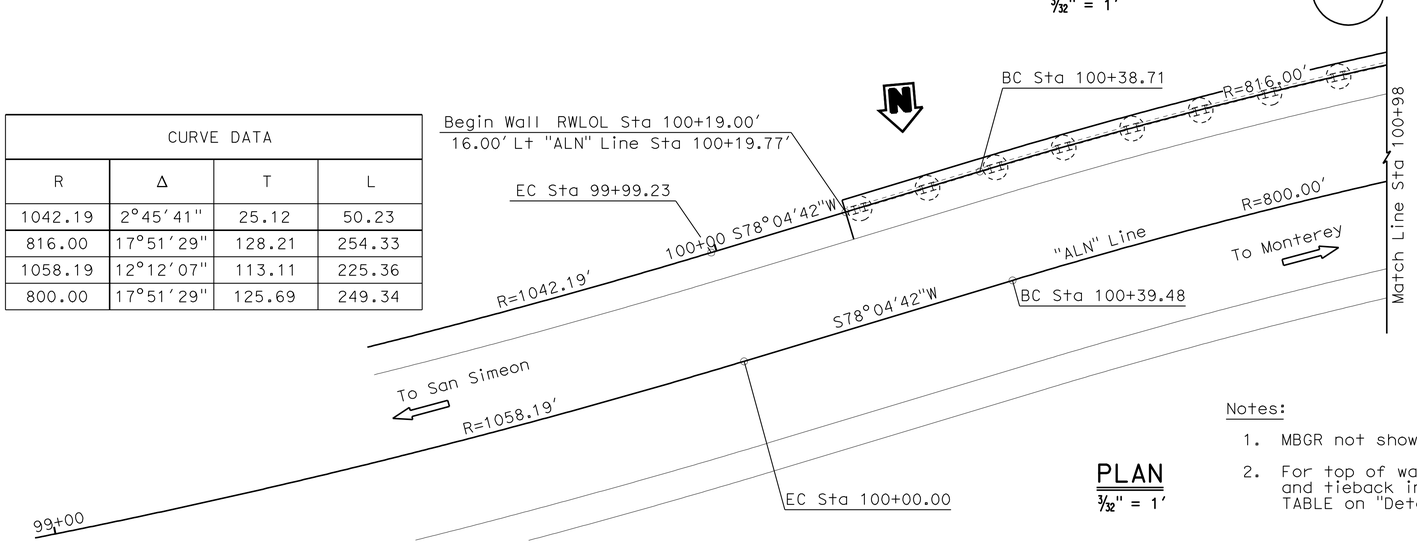

PLAN

3/32" = 1′

Notes:

1. MBGR not shown. See "Road Plans"
2. For top of wall elevation, bottom of pile elevation and tieback information, see PILE & TIEBACK DATA TABLE on "Details No. 4" and "Details No. 5" sheets.

STANDARD PLANS DATED MAY 2006

A10A	ACRONYMS AND ABBREVIATIONS (SHEET 1 OF 2)
A10B	ACRONYMS AND ABBREVIATIONS (SHEET 2 OF 2)
RSP B11-60	CONCRETE BARRIER TYPE 80 (SHEET 1 OF 2)

RSP — INDICATES REVISED STANDARD PLAN
STANDARD PLAN SHEET NO.
DETAIL NO.

	BY	CHECKED
DESIGN	R. Melko	D. Nguyen-Tan
DETAILS	K. Chonkria	D. Nguyen-Tan
QUANTITIES	R. Melko	H. Tuazon

STATE OF CALIFORNIA
DEPARTMENT OF TRANSPORTATION

DIVISION OF ENGINEERING SERVICES
STRUCTURE DESIGN
DESIGN BRANCH 6

BRIDGE NO. 44E0100
POST MILE 22.6/22.8

DANI CREEK RETAINING WALL
STRUCTURE PLAN 1

STRUCTURES DESIGN DETAIL SHEET (ENGLISH) (REV. 10/25/05)

ORIGINAL SCALE IN INCHES FOR REDUCED PLANS 0 1 2 3

CU 05 PROJECT ID
EA 0T5601 0500020037

DISREGARD PRINTS BEARING EARLIER REVISION DATES

REVISION DATES: 06-29-10 07-13-10 07-15-10 07-14-10 07-28-10

SHEET 2 OF 39

FILE => ot5601-c-sp01.dgn

USERNAME => trlenard DATE PLOTTED => 24-AUG-2010 TIME PLOTTED => 10:37

DIST	COUNTY	ROUTE	POST MILES TOTAL PROJECT	SHEET No	TOTAL SHEETS
05	Mon	1	22.6/22.8	50	86

REGISTERED CIVIL ENGINEER 07-28-10 DATE

8-16-10
PLANS APPROVAL DATE

REGISTERED PROFESSIONAL ENGINEER Don L. Nguyen-Tan No. C057510 Exp. 12-31-2011 CIVIL STATE OF CALIFORNIA

The State of California or its officers or agents shall not be responsible for the accuracy or completeness of electronic copies of this plan sheet.

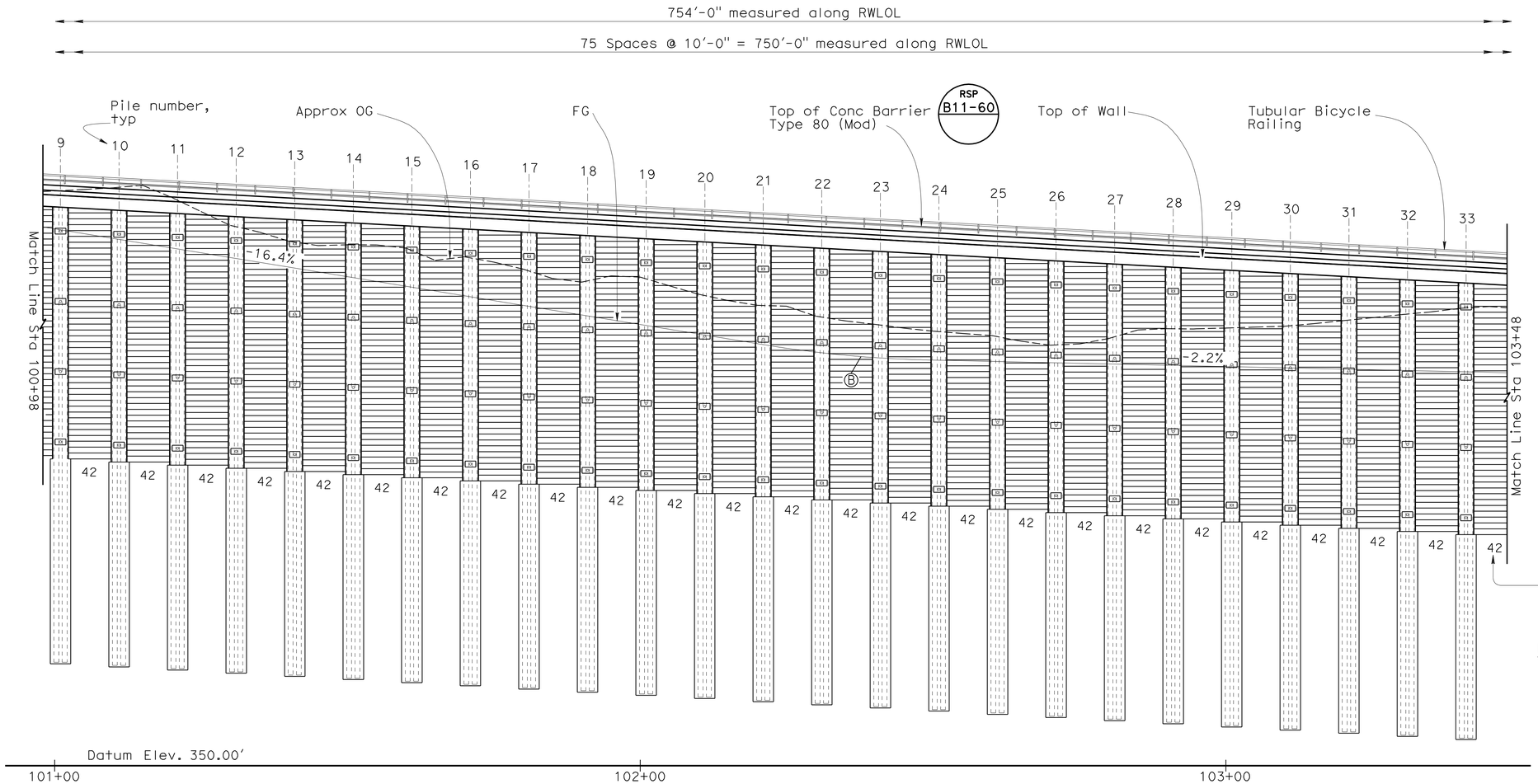

DEVELOPED MIRROR ELEVATION

3/32" = 1'

Finished Grade Profile		
	Description	Elevation
Ⓑ	VPI RWLOL Sta 102+35	420

Notes:

1. For top of wall elevation, bottom of pile elevation and tieback information, see PILE & TIEBACK DATA TABLE on "Details No. 4" and "Details No. 5" sheets.
2. Radius of vertical curves for FG profile = 200'

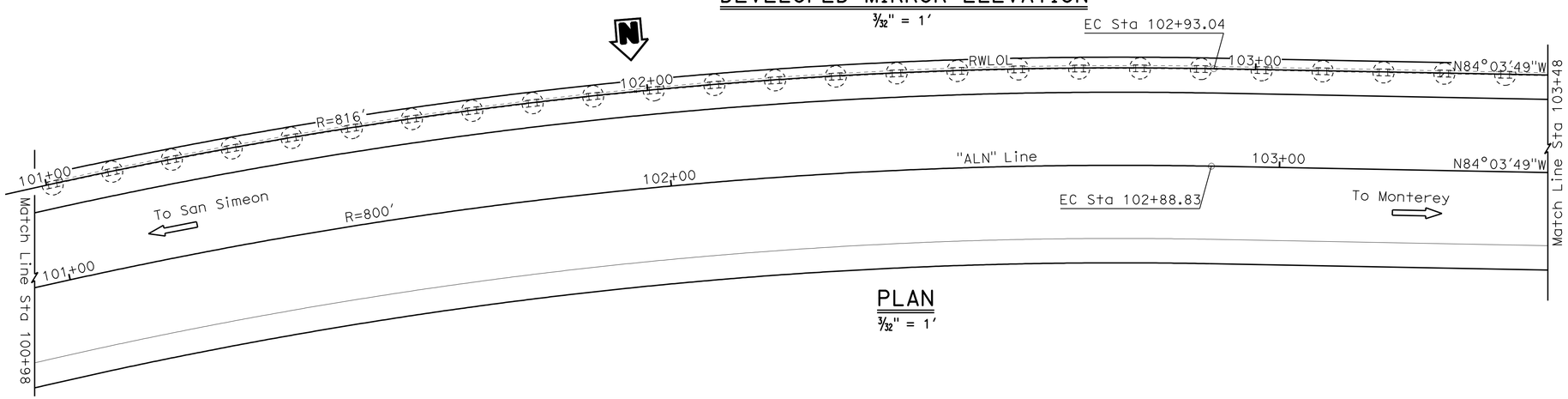

PLAN

3/32" = 1'

CURVE DATA			
R	Δ	T	L
816.00	17°51'29"	128.21	254.33
800.00	17°51'29"	125.69	249.34

DESIGN	BY R. Melko	CHECKED D. Nguyen-Tan	
DETAILS	BY K. Chonkria	CHECKED D. Nguyen-Tan	
QUANTITIES	BY R. Melko	CHECKED H. Tuazon	

STATE OF CALIFORNIA
DEPARTMENT OF TRANSPORTATION

DIVISION OF ENGINEERING SERVICES
STRUCTURE DESIGN
DESIGN BRANCH 6

BRIDGE NO. 44-E0100
POST MILE 22.6/22.8

DANI CREEK RETAINING WALL
STRUCTURE PLAN 2

STRUCTURES DESIGN DETAIL SHEET (ENGLISH) (REV. 10/25/05)

ORIGINAL SCALE IN INCHES FOR REDUCED PLANS 0 1 2 3

CU 05 PROJECT ID 0500020037
EA OT5601

DISREGARD PRINTS BEARING EARLIER REVISION DATES

REVISION DATES: 06-25-10 07-12-10 07-15-10 07-23-10 07-28-10

SHEET 3 OF 39

FILE => ot5601-c-sp02.dgn

USERNAME => trlenard DATE PLOTTED => 24-AUG-2010 TIME PLOTTED => 10:38

DIST	COUNTY	ROUTE	POST MILES TOTAL PROJECT	SHEET No	TOTAL SHEETS
05	Mon	1	22.6/22.8	51	86

REGISTERED CIVIL ENGINEER 07-28-10 DATE

8-16-10
PLANS APPROVAL DATE

REGISTERED PROFESSIONAL ENGINEER
Don L. Nguyen-Tan
No. C057510
Exp. 12-31-2011
CIVIL
STATE OF CALIFORNIA

The State of California or its officers or agents shall not be responsible for the accuracy or completeness of electronic copies of this plan sheet.

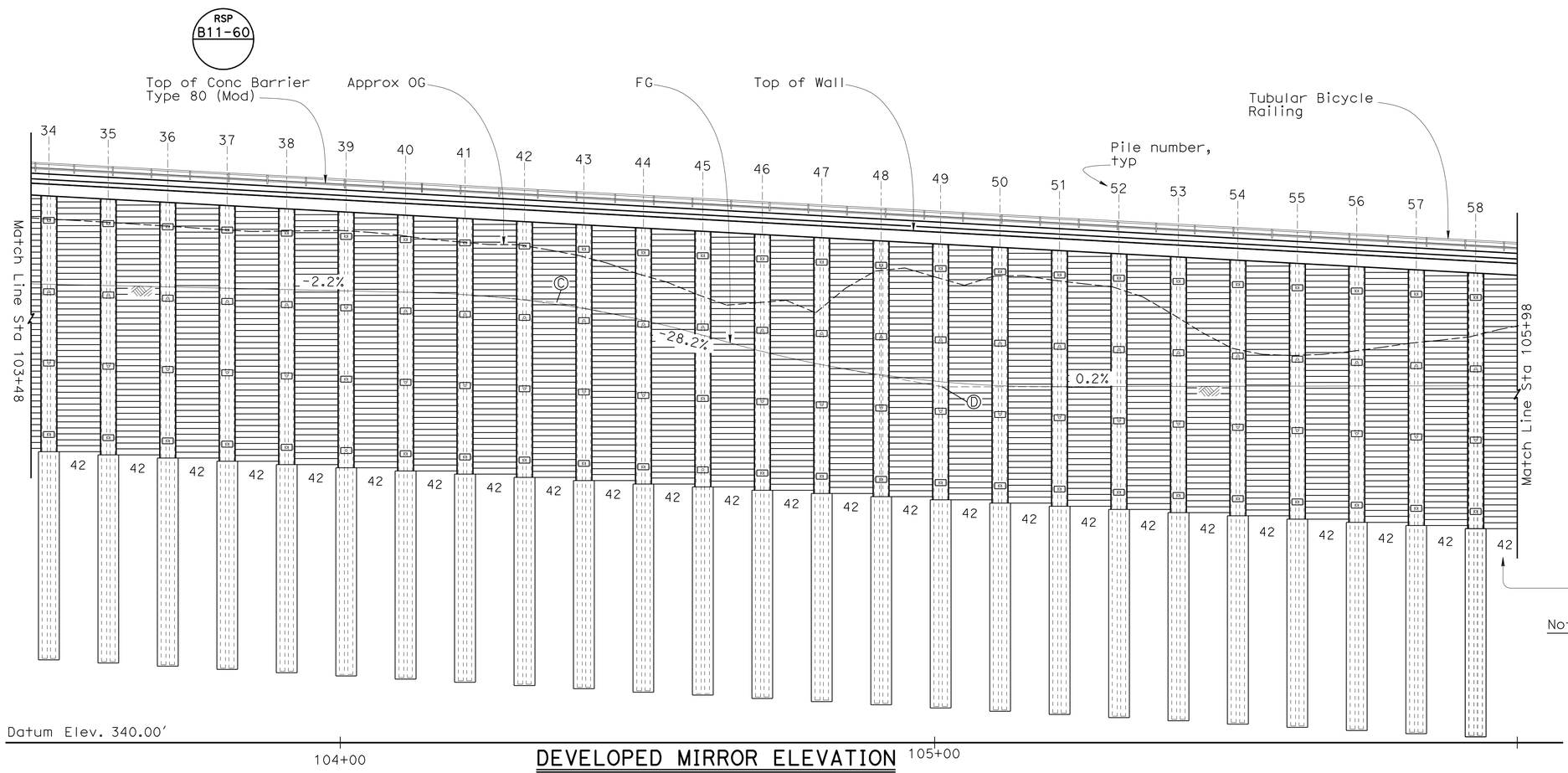

DEVELOPED MIRROR ELEVATION

3/32" = 1'

Finished Grade Profile		
	Description	Elevation
Ⓒ	VPI RWLOL Sta 104+38	415
Ⓓ	VPI RWLOL Sta 114+91	400

Notes:

1. For top of wall elevation, bottom of pile elevation and tieback information, see PILE & TIEBACK DATA TABLE on "Details No. 4" and "Details No. 5" sheets.
2. Radius of vertical curves for FG profile = 200'

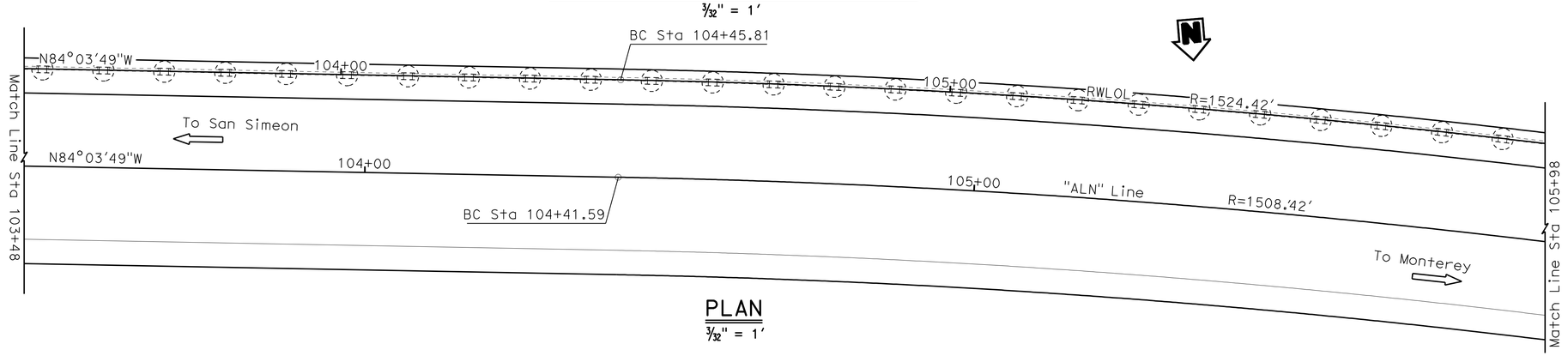

PLAN

3/32" = 1'

CURVE DATA			
R	Δ	T	L
1524.42	14°35'44"	195.22	388.34
1508.42	14°35'45"	193.18	384.26

	BY	CHECKED
DESIGN	R. Melko	D. Nguyen-Tan
DETAILS	K. Chonkria	D. Nguyen-Tan
QUANTITIES	R. Melko	H. Tuazon

STATE OF CALIFORNIA
DEPARTMENT OF TRANSPORTATION

DIVISION OF ENGINEERING SERVICES
STRUCTURE DESIGN
DESIGN BRANCH 6

BRIDGE NO. 44E0100
POST MILE 22.6/22.8

DANI CREEK RETAINING WALL
STRUCTURE PLAN 3

STRUCTURES DESIGN DETAIL SHEET (ENGLISH) (REV. 10/25/05)

ORIGINAL SCALE IN INCHES FOR REDUCED PLANS 0 1 2 3

CU 05 PROJECT ID 0500020037
EA 0T5601

DISREGARD PRINTS BEARING EARLIER REVISION DATES

REVISION DATES 06-29-10 07-12-10 07-23-10 07-28-10

SHEET 4 OF 39

FILE => ot5601-c-sp03.dgn

USERNAME => trlenard DATE PLOTTED => 24-AUG-2010 TIME PLOTTED => 10:38

DIST	COUNTY	ROUTE	POST MILES TOTAL PROJECT	SHEET No	TOTAL SHEETS
05	Mon	1	22.6/22.8	52	86

REGISTERED CIVIL ENGINEER 07-28-10 DATE

8-16-10
PLANS APPROVAL DATE

REGISTERED PROFESSIONAL ENGINEER Don L. Nguyen-Tan No. C057510 Exp. 12-31-2011 CIVIL STATE OF CALIFORNIA

The State of California or its officers or agents shall not be responsible for the accuracy or completeness of electronic copies of this plan sheet.

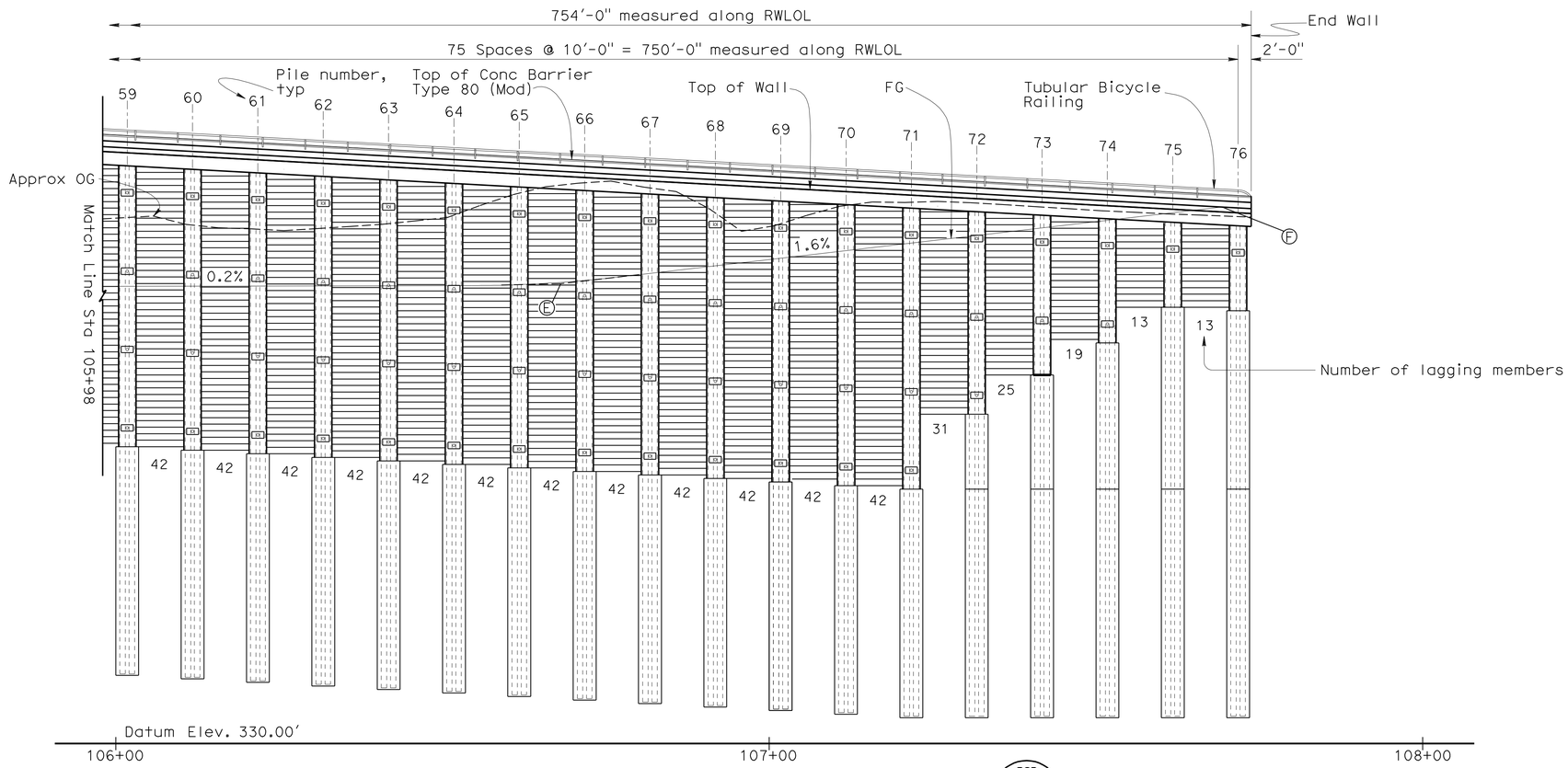

DEVELOPED MIRROR ELEVATION

RSP B11-60

3/32" = 1'

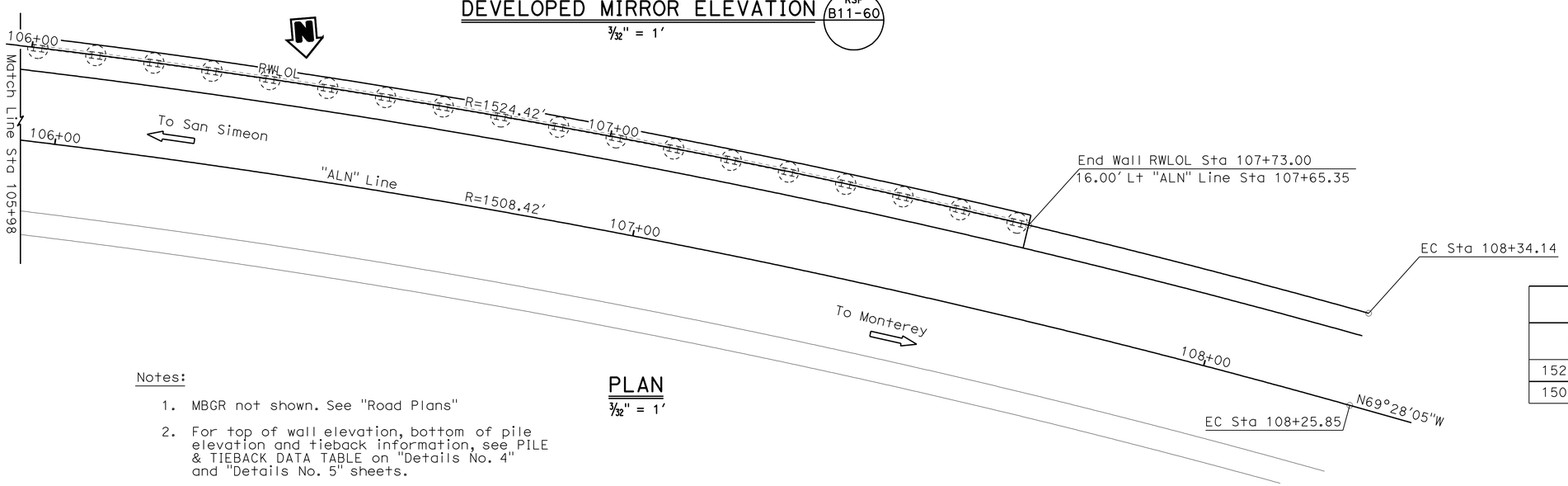

PLAN

3/32" = 1'

Finished Grade Profile		
	Description	Elevation
E	VPI RWLOL Sta 106+65	450
F	VPI RWLOL Sta 107+66	451

Note:

1. Radius of vertical curves for FG profile = 200'

CURVE DATA			
R	Δ	T	L
1524.42	14°35'44"	195.22	388.34
1508.42	14°35'45"	193.18	384.26

Notes:

1. MBGR not shown. See "Road Plans"
2. For top of wall elevation, bottom of pile elevation and tieback information, see PILE & TIEBACK DATA TABLE on "Details No. 4" and "Details No. 5" sheets.

	BY	CHECKED
DESIGN	R. Melko	D. Nguyen-Tan
DETAILS	K. Chonkria	D. Nguyen-Tan
QUANTITIES	R. Melko	H. Tuazon

STATE OF CALIFORNIA DEPARTMENT OF TRANSPORTATION

DIVISION OF ENGINEERING SERVICES STRUCTURE DESIGN DESIGN BRANCH 6

BRIDGE NO. 44E0100
POST MILE 22.6/22.8

DANI CREEK RETAINING WALL
STRUCTURE PLAN 4

STRUCTURES DESIGN DETAIL SHEET (ENGLISH) (REV. 10/25/05)

ORIGINAL SCALE IN INCHES FOR REDUCED PLANS 0 1 2 3

CU 05 EA 0T5601 PROJECT ID 0500020037

DISREGARD PRINTS BEARING EARLIER REVISION DATES

REVISION DATES 06-28-10 07-13-10 07-15-10 07-26-10 07-28-10

SHEET 5 OF 39

FILE => ot5601-c-sp04.dgn

USERNAME => trlenard DATE PLOTTED => 24-AUG-2010 TIME PLOTTED => 10:38

DIST	COUNTY	ROUTE	POST MILES TOTAL PROJECT	SHEET No	TOTAL SHEETS
05	Mon	1	22.6/22.8	53	86

REGISTERED CIVIL ENGINEER 07-28-10 DATE

8-16-10
PLANS APPROVAL DATE

REGISTERED PROFESSIONAL ENGINEER Don L. Nguyen-Tan No. C057510 Exp. 12-31-2011 CIVIL STATE OF CALIFORNIA

The State of California or its officers or agents shall not be responsible for the accuracy or completeness of electronic copies of this plan sheet.

CURVE DATA

No.	R	Δ	T	L
Ⓐ	1042.19	2°45'41"	25.12	50.23
Ⓑ	816.00	17°51'29"	128.21	254.33
Ⓒ	1058.19	12°12'07"	113.11	225.36
Ⓓ	800.00	17°51'29"	125.69	249.34

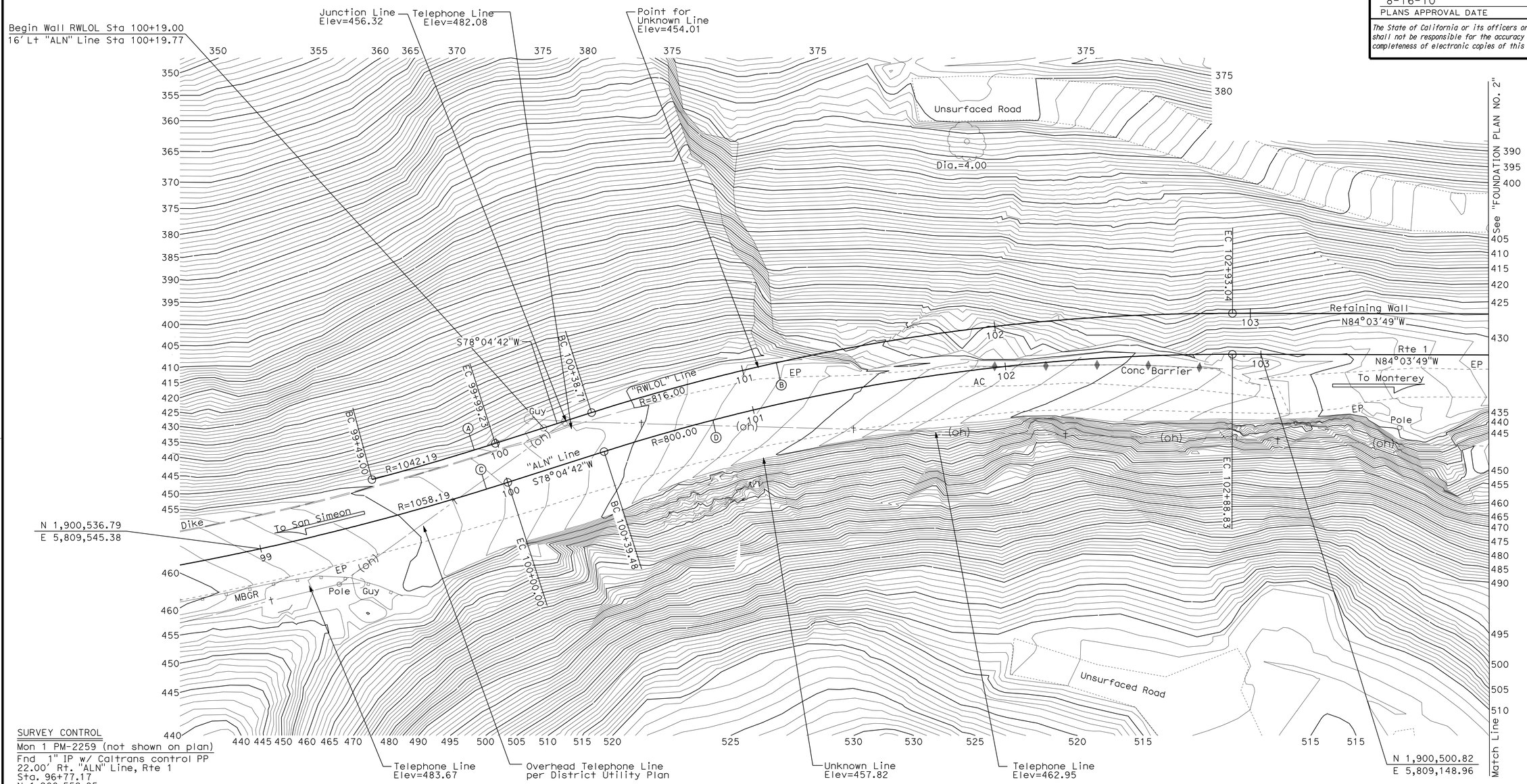

SURVEY CONTROL

Mon 1 PM-2259 (not shown on plan)
Fnd 1" IP w/ Caltrans control PP
22.00' Rt. "ALN" Line, Rte 1
Sta. 96+77.17
N 1,900,559.85
E 5,809,770.34
Elev. = 471.53

Mon 1 PM-2282 (see "FOUNDATION PLAN NO. 2)
Fnd 1" IP w/ Caltrans control PP
17.54' Lt. "ALN" Line, Rte 1
Sta. 108+59.47
N 1,900,598.56
E 5,808,597.45
Elev. = 406.77

PRELIMINARY INVESTIGATION SECTION

SCALE	VERT.DATUM NAVD 88	PHOTOGRAMMETRY AS OF: 04-05-2010			
1"=20'	HORZ.DATUM NAD 83-92	SURVEYED	BY District	CHECKED	BY C. FASSETT 06/10
ALIGNMENT TIES Dist. Traverse Sheet		DRAFTED	BY C. FASSETT 06/2010	CHECKED	BY T.ZOLNIKOV 06/10

	BY	CHECKED
DESIGN	D. Nguyen-Tan	R. Melko
DETAILS	K. Chonkria	D. Nguyen-Tan
QUANTITIES	R. Melko	H. Tuazon

STATE OF CALIFORNIA
DEPARTMENT OF TRANSPORTATION

DIVISION OF ENGINEERING SERVICES
STRUCTURE DESIGN
DESIGN BRANCH 6

BRIDGE NO. 44E0100
POST MILE 22.6/22.8

DANI CREEK RETAINING WALL
FOUNDATION PLAN NO. 1

STRUCTURES FOUNDATION PLAN SHEET (ENGLISH) (REV. 10/25/05)

ORIGINAL SCALE IN INCHES FOR REDUCED PLANS 0 1 2 3

CU 05
EA 0T5601
PROJECT ID 0500020037

DISREGARD PRINTS BEARING EARLIER REVISION DATES

REVISION DATES: 2/24/10 07-22-10

SHEET 6 OF 39

FILE => ot5601-e-fdp101.dgn

USERNAME => trlenard DATE PLOTTED => 24-AUG-2010 TIME PLOTTED => 10:38

DIST	COUNTY	ROUTE	POST MILES TOTAL PROJECT	SHEET No	TOTAL SHEETS
05	Mon	1	22.6/22.8	54	86

REGISTERED CIVIL ENGINEER 07-28-10 DATE

8-16-10
PLANS APPROVAL DATE

REGISTERED PROFESSIONAL ENGINEER
Don L. Nguyen-Tan
No. C057510
Exp. 12-31-2011
CIVIL
STATE OF CALIFORNIA

The State of California or its officers or agents shall not be responsible for the accuracy or completeness of electronic copies of this plan sheet.

CURVE DATA

No.	R	Δ	T	L
E	1524.42	14°35'44"	195.22	388.34
F	1508.42	14°35'45"	193.18	384.26

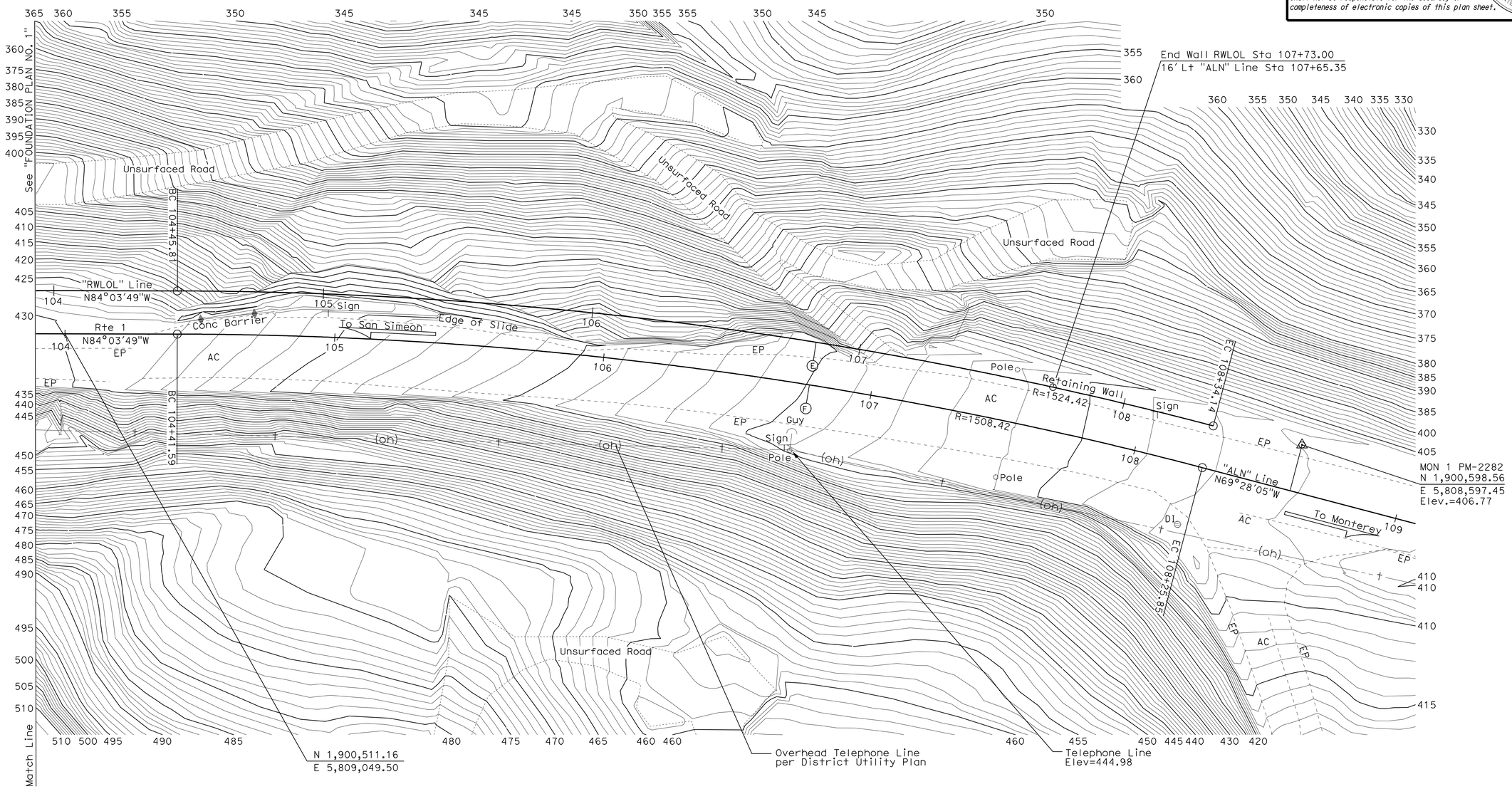

Note:
For Control Data, See "FOUNDATION PLAN NO. 1"

PRELIMINARY INVESTIGATION SECTION							
SCALE	VERT.DATUM NAVD 88	PHOTOGRAMMETRY AS OF: 04-05-2010					
1"=20'	HORZ.DATUM NAD 83-92	SURVEYED	BY District	CHECKED	BY C. FASSETT	06/10	
ALIGNMENT TIES Dist. Traverse Sheet		DRAFTED	BY C. FASSETT 06/2010	CHECKED	BY T.ZOLNIKOV	06/10	

DESIGN	BY D. Nguyen-Tan	CHECKED R. Melko
DETAILS	BY K. Chonkria	CHECKED D. Nguyen-Tan
QUANTITIES	BY R. Melko	CHECKED H. Tuazon

STATE OF CALIFORNIA
DEPARTMENT OF TRANSPORTATION

DIVISION OF ENGINEERING SERVICES
STRUCTURE DESIGN
DESIGN BRANCH 6

BRIDGE NO. 44E0100
POST MILE 22.6/22.8

DANI CREEK RETAINING WALL
FOUNDATION PLAN NO. 2

STRUCTURES FOUNDATION PLAN SHEET (ENGLISH) (REV. 10/25/05)

ORIGINAL SCALE IN INCHES FOR REDUCED PLANS 0 1 2 3

CU 05
EA 0T5601
PROJECT ID 0500020037

DISREGARD PRINTS BEARING EARLIER REVISION DATES

REVISION DATES: 7/07/10 7/23/10

SHEET 7 OF 39

FILE => ot5601-e-fdp102.dgn

USERNAME => trienard DATE PLOTTED => 24-AUG-2010 TIME PLOTTED => 10:38

DIST	COUNTY	ROUTE	POST MILES TOTAL PROJECT	SHEET No	TOTAL SHEETS
05	Mon	1	22.6/22.8	55	86

REGISTERED CIVIL ENGINEER 07-28-10 DATE

8-16-10
PLANS APPROVAL DATE

REGISTERED PROFESSIONAL ENGINEER Don L. Nguyen-Tan No. C057510 Exp. 12-31-2011 CIVIL STATE OF CALIFORNIA

The State of California or its officers or agents shall not be responsible for the accuracy or completeness of electronic copies of this plan sheet.

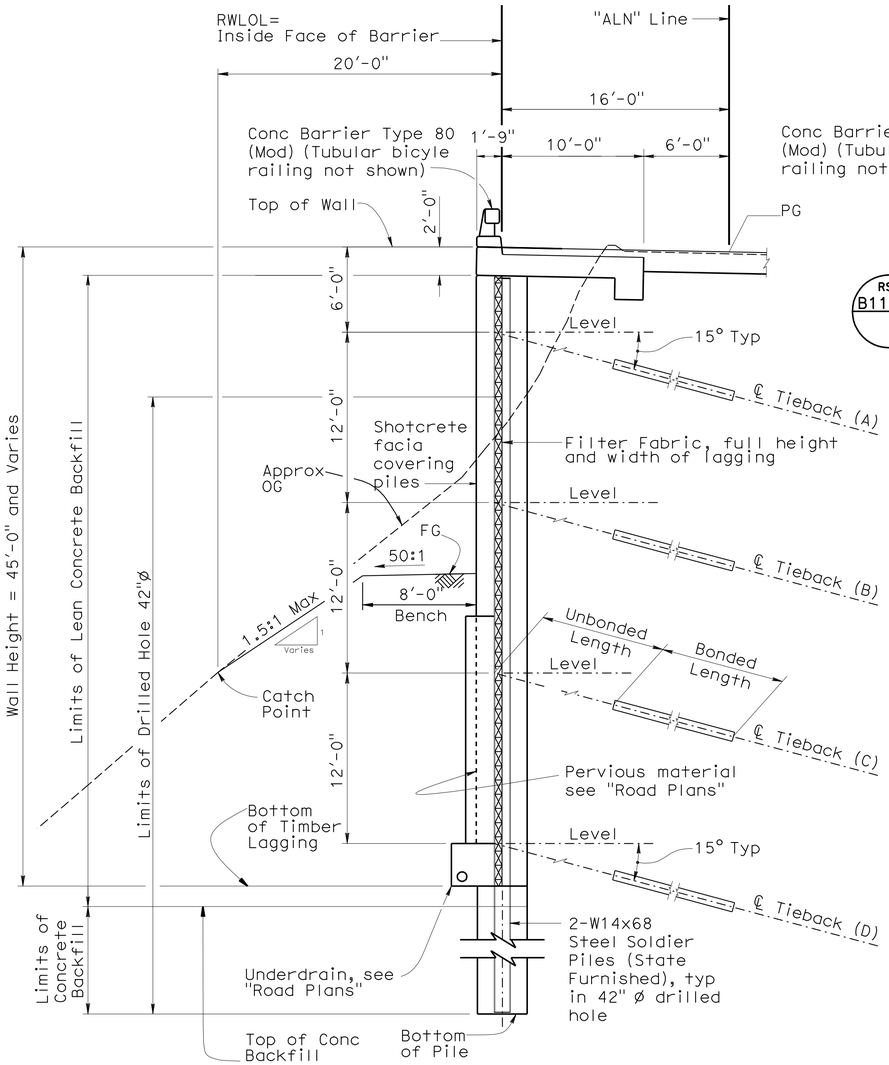

TYPICAL SECTION (RSP B11-60)

No Scale

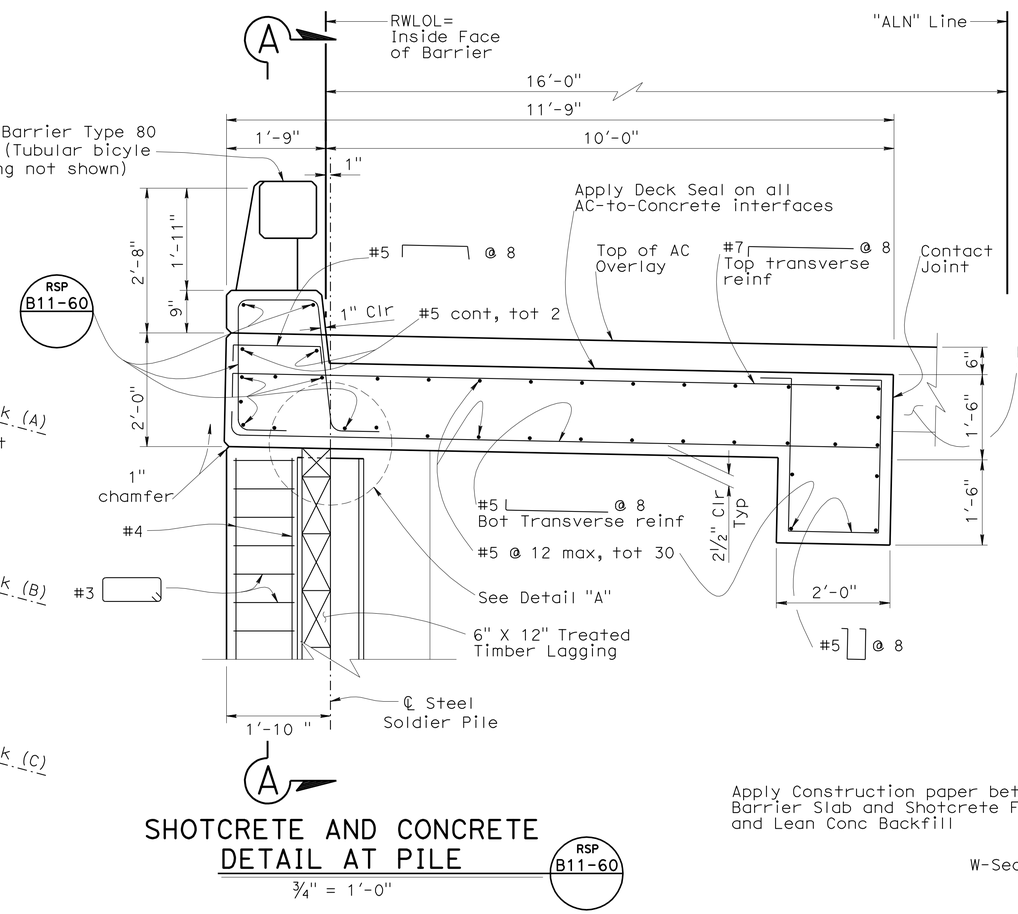

SHOTCRETE AND CONCRETE DETAIL AT PILE (RSP B11-60)

¾" = 1'-0"

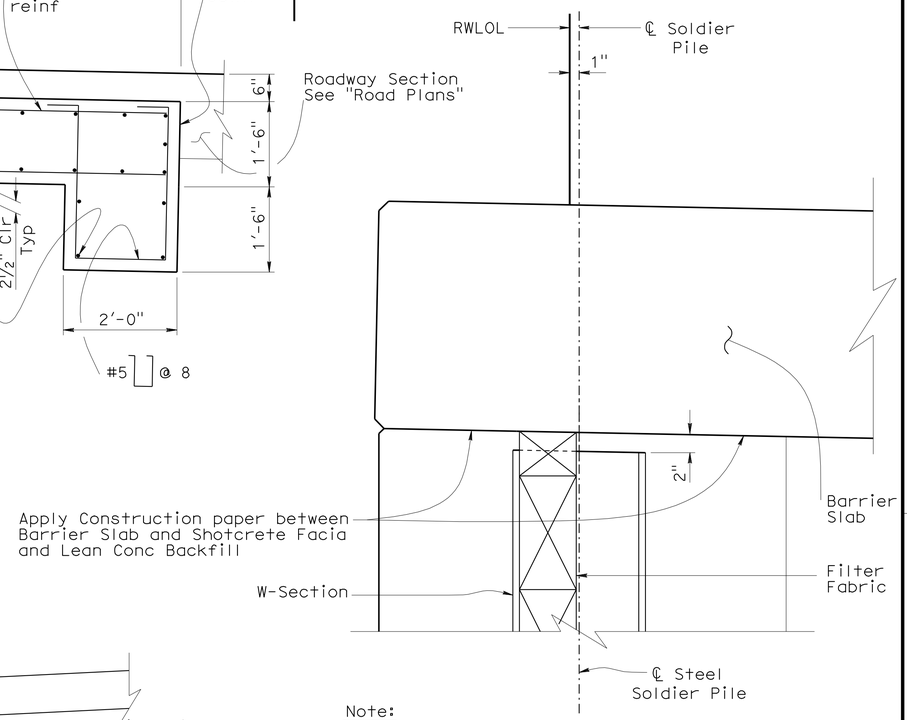

Note:

Barrier, barrier slab and Shotcrete Facia reinforcement not shown.

Detail "A"
Steel Pile Anchor

1½" = 1'-0"

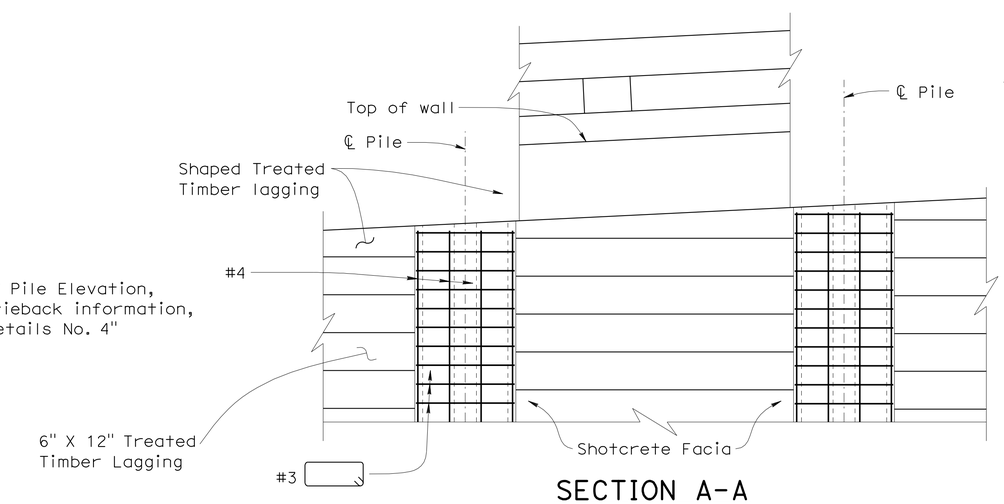

SECTION A-A

½" = 1'-0"

Notes:

1. For concrete barrier details not shown, see Revised Standard Plan B11-60.
2. No expansion joints in concrete barrier or barrier slab.
3. All bar reinforcing steel to be epoxy-coated including those in Concrete Barrier Type 80 (Mod).
4. Barrier and barrier slab shall not be constructed until all Tiebacks (A) and Tiebacks (B) are installed and stressed.
5. For Top of Wall Elevation, Bottom of Pile Elevation, Top of Conc Backfill Elevation, and tieback information, see PILE & TIEBACK DATA TABLE on "Details No. 4" and "Details No. 5" sheets

	BY	CHECKED
DESIGN	D. Nguyen-Tan	R. Melko
DETAILS	K. Chonkria	D. Nguyen-Tan
QUANTITIES	R. Melko	H. Tuazon

STATE OF CALIFORNIA
DEPARTMENT OF TRANSPORTATION

DIVISION OF ENGINEERING SERVICES
STRUCTURE DESIGN
DESIGN BRANCH 6

BRIDGE NO. 44E0100
POST MILE 22.6/22.8

DANI CREEK RETAINING WALL
TYPICAL SECTION

STRUCTURES DESIGN DETAIL SHEET (ENGLISH) (REV. 10/25/05)

ORIGINAL SCALE IN INCHES FOR REDUCED PLANS 0 1 2 3

CU 05 PROJECT ID
EA 0T5601 0500020037

DISREGARD PRINTS BEARING EARLIER REVISION DATES

REVISION DATES: 06-15-10 06-25-10 07-15-10 07-22-10 07-28-10

SHEET 8 OF 39

FILE => ot5601-k-ts01.dgn

USERNAME => rfriebard DATE PLOTTED => 24-AUG-2010 TIME PLOTTED => 10:38

DIST	COUNTY	ROUTE	POST MILES TOTAL PROJECT	SHEET No	TOTAL SHEETS
05	Mon	1	22.6/22.8	56	86

REGISTERED CIVIL ENGINEER 07-28-10 DATE

8-16-10
PLANS APPROVAL DATE

REGISTERED PROFESSIONAL ENGINEER Don L. Nguyen-Tan No. C057510 Exp. 12-31-2011 CIVIL STATE OF CALIFORNIA

The State of California or its officers or agents shall not be responsible for the accuracy or completeness of electronic copies of this plan sheet.

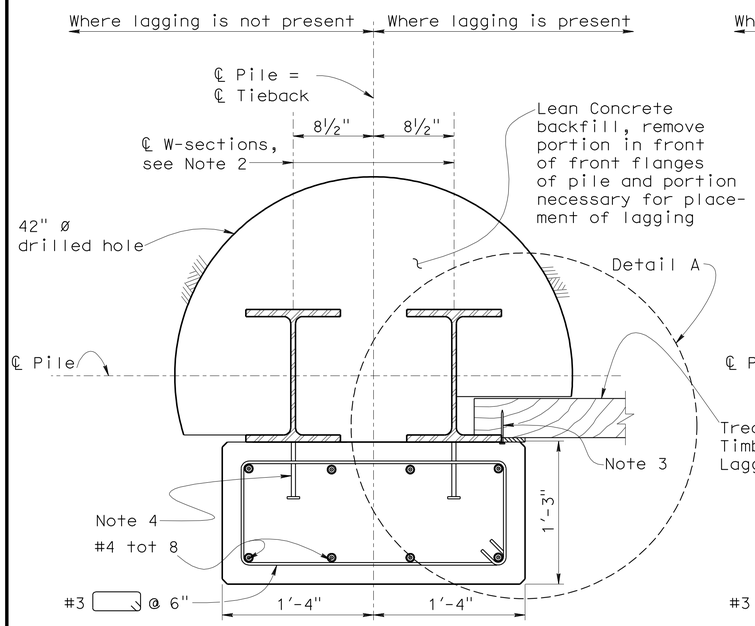

PILE SECTION BETWEEN TIEBACK

No Scale

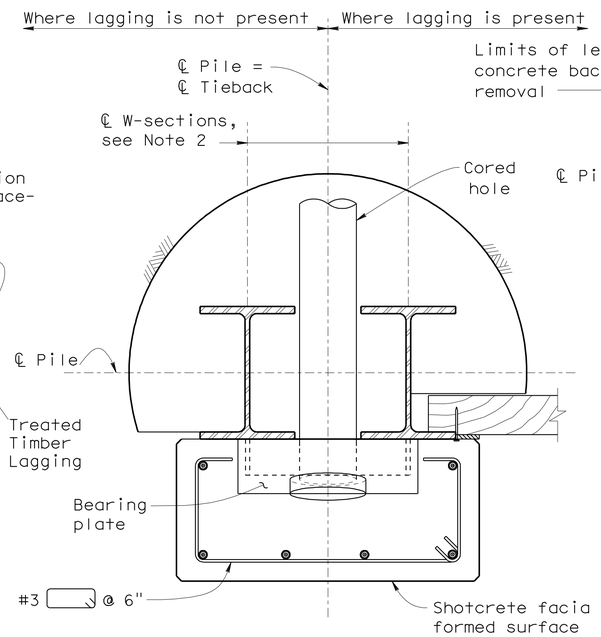

PILE SECTION AT TIEBACK

No Scale

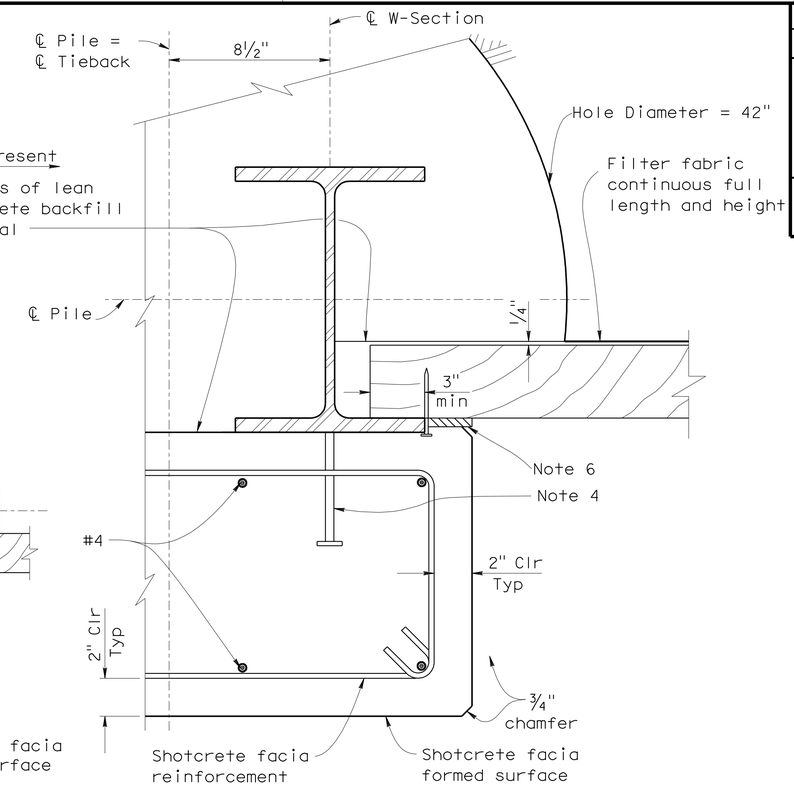

DETAIL A

No Scale

Notes:

1. Detail symmetrical about ℄ Piles = ℄ Tieback.
2. Provide sufficient number of steel stay plates between W-Sections to maintain relative alignment during construction.
3. ¼" Dia 5" galvanized spikes, Typ.
4. Concrete anchor stud, ⅝"Ø x 6" @ 12" vertical spacing. All studs are to be welded to W-section with full penetration weld.
5. ⅜" x 6" High Density Polyethylene (HDPE) shim between lagging members secured with ¼" Dia galv commercial wire nails, Typ. Width of shim to match width of timber lagging.
6. ½" x 6" x full length premolded expansion joint filler, Typ.
7. All bar reinforcing steel to be epoxy-coated.

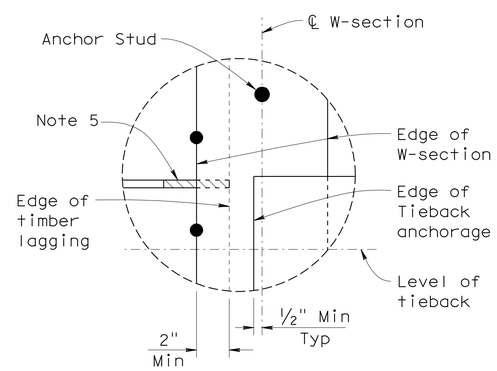

Detail "B"

No Scale

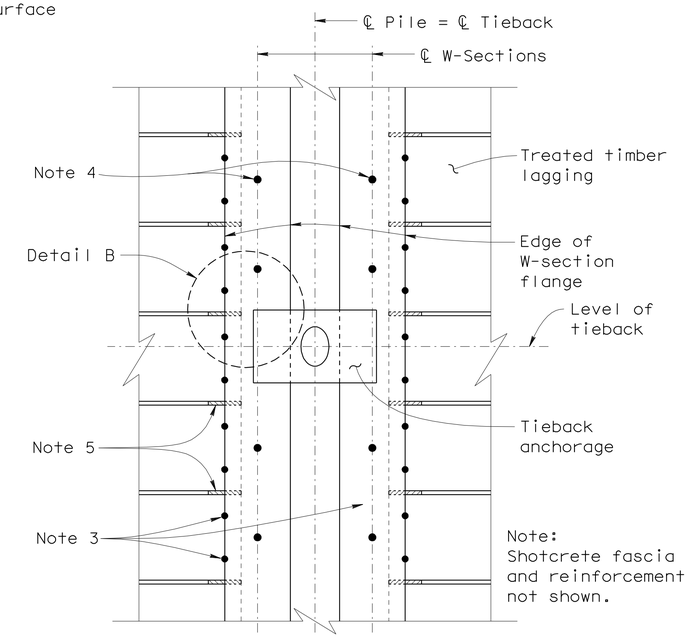

PART ELEVATION OF SOLDIER PILE

No Scale

DESIGN	BY D. Nguyen Tan	CHECKED R. Melko	
DETAILS	BY K. Chonkria	CHECKED D. Nguyen Tan	
QUANTITIES	BY R. Melko	CHECKED H. Tuazon	

STATE OF CALIFORNIA
DEPARTMENT OF TRANSPORTATION

DIVISION OF ENGINEERING SERVICES
STRUCTURE DESIGN
DESIGN BRANCH 6

BRIDGE NO. 44E0100
POST MILE 22.6/22.8

DANI CREEK RETAINING WALL
DETAILS NO. 1

STRUCTURES DESIGN DETAIL SHEET (ENGLISH) (REV. 10/25/05)

ORIGINAL SCALE IN INCHES FOR REDUCED PLANS 0 1 2 3

CU 05 EA 0T5601 PROJECT ID 0500020037

DISREGARD PRINTS BEARING EARLIER REVISION DATES

REVISION DATES: 06/14/10 07-26-10 07-28-10

SHEET 9 OF 39

FILE => ot5601-p-pdt01.dgn

USERNAME => trlenard DATE PLOTTED => 24-AUG-2010 TIME PLOTTED => 10:38

DIST	COUNTY	ROUTE	POST MILES TOTAL PROJECT	SHEET No	TOTAL SHEETS
05	Mon	1	22.6/22.8	57	86

REGISTERED CIVIL ENGINEER 07-28-10 DATE

8-16-10
PLANS APPROVAL DATE

REGISTERED PROFESSIONAL ENGINEER
Don L.Nguyen-Tan
No. C057510
Exp.12-31-2011
CIVIL
STATE OF CALIFORNIA

The State of California or its officers or agents shall not be responsible for the accuracy or completeness of electronic copies of this plan sheet.

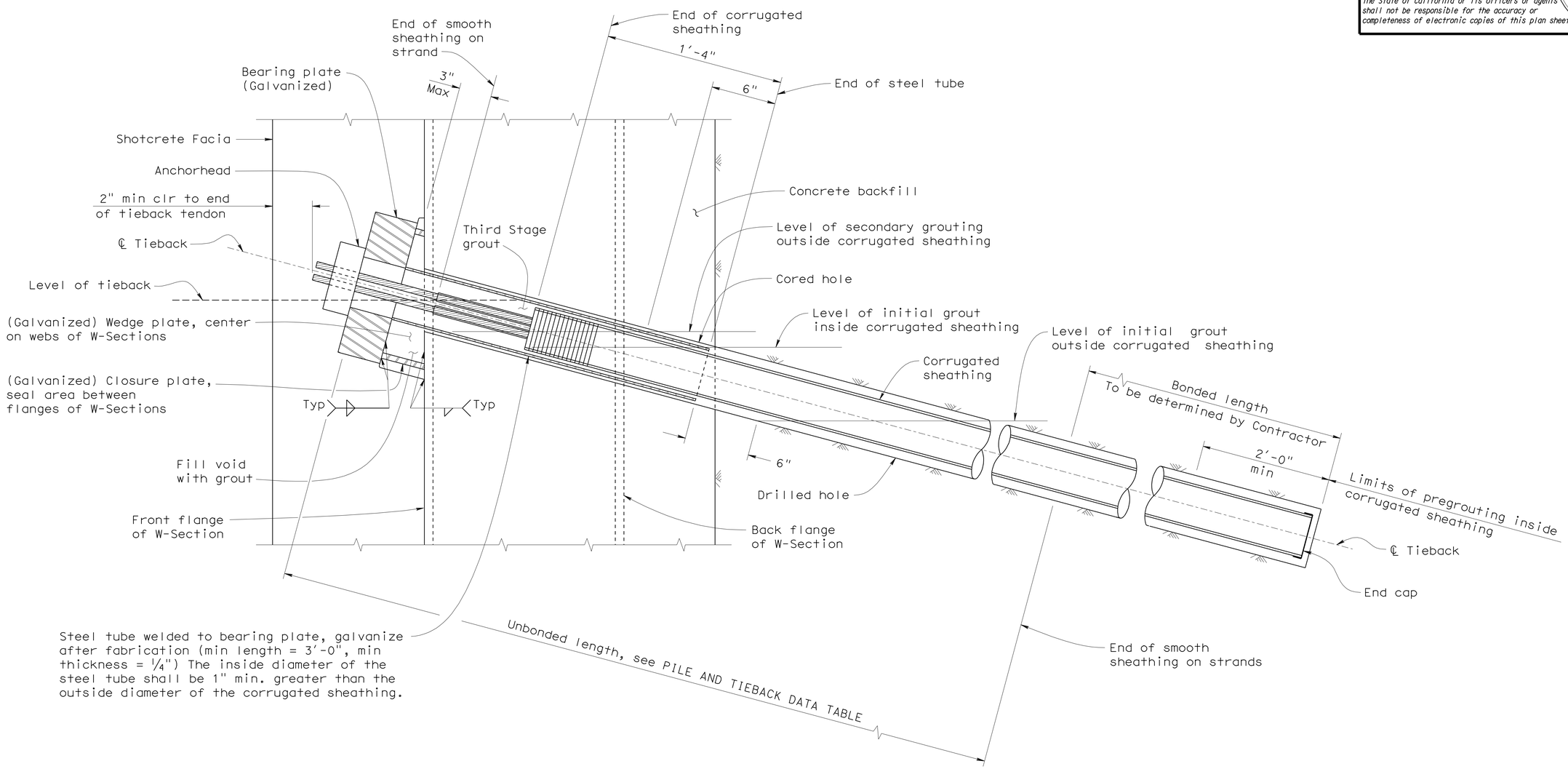

TIEBACK TENDON DETAIL

No Scale

DESIGN	BY D. Nguyen Tan	CHECKED R. Melko	
DETAILS	BY K. Chonkria	CHECKED D. Nguyen Tan	
QUANTITIES	BY R. Melko	CHECKED H. Tuazon	

STATE OF CALIFORNIA
DEPARTMENT OF TRANSPORTATION

DIVISION OF ENGINEERING SERVICES
STRUCTURE DESIGN
DESIGN BRANCH 6

BRIDGE NO. 44E0100
POST MILE 22.6/22.8

DANI CREEK RETAINING WALL
DETAILS NO. 2

STRUCTURES DESIGN DETAIL SHEET (ENGLISH) (REV. 10/25/05)

ORIGINAL SCALE IN INCHES FOR REDUCED PLANS 0 1 2 3

CU 05 PROJECT ID 0500020037
EA OT5601

DISREGARD PRINTS BEARING EARLIER REVISION DATES

REVISION DATES 07-07-10 07-12-10 07-26-10

SHEET 10 OF 39

FILE => ot5601-p-pdt02.dgn

USERNAME => ttienard DATE PLOTTED => 24-AUG-2010 TIME PLOTTED => 10:38

DIST	COUNTY	ROUTE	POST MILES TOTAL PROJECT	SHEET No	TOTAL SHEETS
05	Mon	1	22.6/22.8	58	86

REGISTERED CIVIL ENGINEER 07-28-10 DATE

8-16-10
PLANS APPROVAL DATE

The State of California or its officers or agents shall not be responsible for the accuracy or completeness of electronic copies of this plan sheet.

REGISTERED PROFESSIONAL ENGINEER Don L. Nguyen-Tan No. C057510 Exp. 12-31-2011 CIVIL STATE OF CALIFORNIA

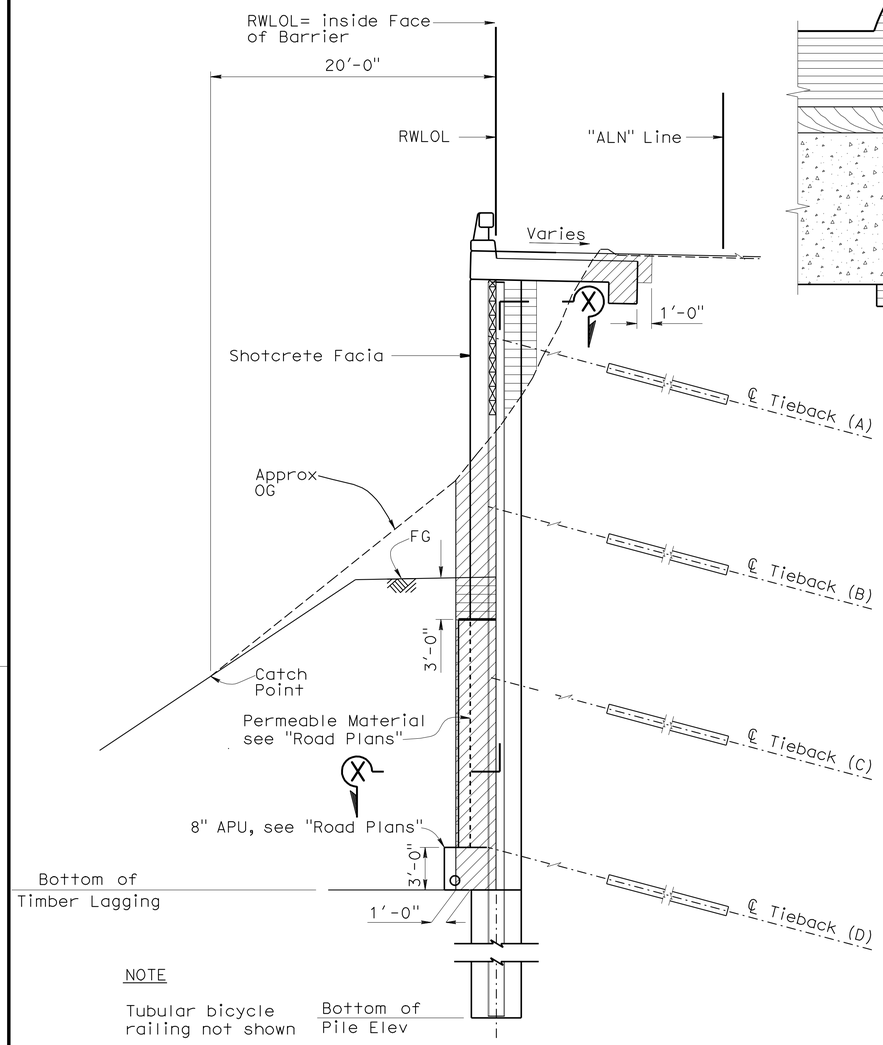

NOTE

Tubular bicycle railing not shown

LIMITS OF PAYMENT FOR EXCAVATION AND BACKFILL

No Scale

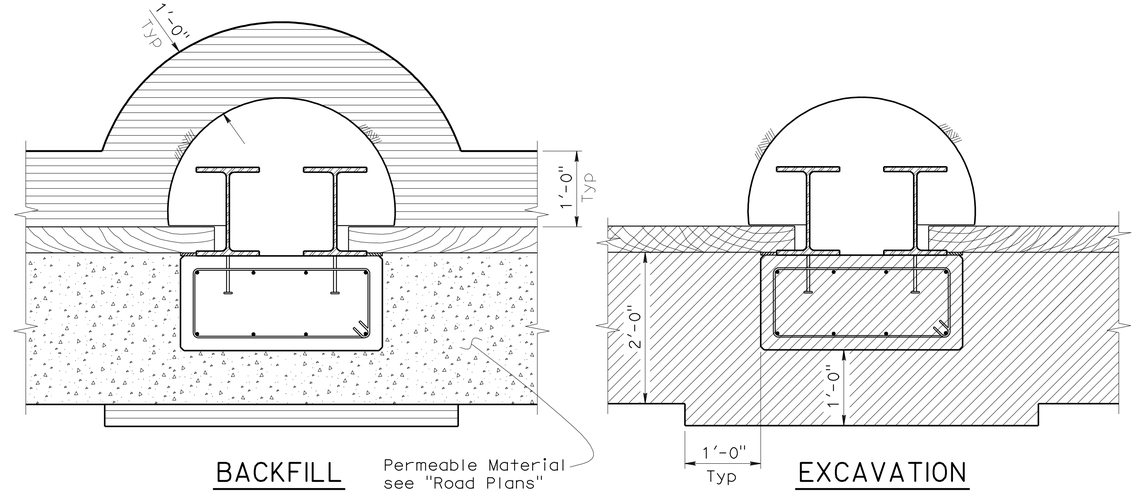

SECTION X-X

No Scale

GENERAL NOTES:

DESIGN: Bridge Design Specifications, April 2000 (1996 AASHTO with Interims and Revisions by CALTRANS).

LIVE LOAD: 240 psf

SOIL PARAMETERS: (For determination of Design Lateral Earth Pressures)
Backfill unit weight = 135 lb/ft^3
Friction Angle = 27 °
Active Pressure coefficent, Ka = 0.375
Native material Unit Weight = 135 lb/ft^3

STRUCTURAL STEEL: ASTM A709/A709M Grade 50 or 50W
fy = 50 ksi

STRUCTURAL TIMBER: Treated Douglas Fir, Grade No.1 or better. Timber to be full sawn.

PRESTRESSING STEEL (GROUND ANCHORS): T= Design force on ground anchor (kips)

fpu= Minimum ultimate tensile strength of ground anchor steel

As (Min.)= Minimum cross sectional area of steel in ground anchor. (sq. in)

Steel= ASTM designation: A416 (Strands)

$$As\ (Min.) = \frac{1.5T}{0.75\ fpu}$$

REINFORCED CONCRETE: f'c =3,200 psi (Concrete compressive strength at 28 days)
fy = 60,000 psi (Yield strength of reinforcement)

NOTES

1. Tiebacks shall be constructed starting with Tieback (A). At soldier piles where OG at RWLOL is more than 3' below Tieback (A), the Contractor shall construct Tieback (B) before Tieback (A). After installing Tieback (B), the Contractor shall backfill and install Tieback (A) before excavating for Tiebacks (C) and (D).
2. Structure Backfill and lagging shall be placed to at least 3'-0" above the tieback prior to construction of the tieback.
3. Excavation shall not extend more than 3'-0" below a tieback until it is completely constructed and stressed.
4. For Limits & Layout of Permeable Material and 8" APU, see "Road Plans".
5. Contractor may submit alternative plans & details for approval by the Engineer.
6. For limits of payments for roadway excavation, see "Road Plans".

LEGEND

Structure Backfill (Soldier Pile Wall)

Structure Excavation (Soldier Pile Wall)

	BY	CHECKED
DESIGN	D. Nguyen Tan	R. Melko
DETAILS	K. Chonkria	D. Nguyen Tan
QUANTITIES	R. Melko	H. Tuazon

STATE OF CALIFORNIA DEPARTMENT OF TRANSPORTATION

DIVISION OF ENGINEERING SERVICES STRUCTURE DESIGN DESIGN BRANCH 6

BRIDGE NO. 44E0100
POST MILE 22.6/22.8

DANI CREEK RETAINING WALL
DETAILS NO. 3

STRUCTURES DESIGN DETAIL SHEET (ENGLISH) (REV. 10/25/05)

ORIGINAL SCALE IN INCHES FOR REDUCED PLANS 0 1 2 3

CU 05 EA 0T5601 PROJECT ID 0500020037

DISREGARD PRINTS BEARING EARLIER REVISION DATES

REVISION DATES 06-11-10 06-25-10 07-26-10 07-27-10 07-28-10

SHEET 11 OF 39

FILE => ot5601-p-pdt03.dgn

USERNAME => trienard DATE PLOTTED => 24-AUG-2010 TIME PLOTTED => 10:38

DIST	COUNTY	ROUTE	POST MILES TOTAL PROJECT	SHEET No	TOTAL SHEETS
05	Mon	1	22.6/22.8	59	86

REGISTERED CIVIL ENGINEER 07-28-10 DATE

8-16-10
PLANS APPROVAL DATE

REGISTERED PROFESSIONAL ENGINEER Don L. Nguyen-Tan No. C057510 Exp. 12-31-2011 CIVIL STATE OF CALIFORNIA

The State of California or its officers or agents shall not be responsible for the accuracy or completeness of electronic copies of this plan sheet.

PILE & TIEBACK DATA TABLE

Station Along RWLOL	Pile Number	Top of Wall Elev	Bottom of Pile Elev	Bottom of Lagging Elev (Note 1)	Top of Concrete Backfill Elev (Note 2)	T1=A		T2=B		T3=C		T3=D	
						T	Unbonded Length	T	Unbonded Length	T	Unbonded Length	T	Unbonded Length
feet		feet	feet	feet	feet	kips	feet	kips	feet	kips	feet	kips	feet
100+21.00	1	451.11	409.78	436.11	*	190	45						
100+31.00	2	450.79	409.46	435.79	*	190	45						
100+41.00	3	450.45	399.12	429.45	*	190	45	250	40				
100+51.00	4	450.01	393.68	425.01	*	190	45	250	40				
100+61.00	5	449.57	388.24	421.57	*	190	45	250	40				
100+71.00	6	449.13	387.80	415.13	*	190	45	250	40	250	35		
100+81.00	7	448.69	377.36	408.69	*	190	45	250	40	250	35		
100+91.00	8	448.25	366.91	403.25	*	190	45	250	40	250	35	190	35
101+01.00	9	447.81	366.47	402.81	*	190	45	250	40	250	35	190	35
101+11.00	10	447.37	366.03	402.37	*	190	45	250	40	250	35	190	35
101+21.00	11	446.93	365.59	401.93	*	190	45	250	40	250	35	190	35
101+31.00	12	446.49	365.15	401.49	*	190	45	250	40	250	35	190	35
101+41.00	13	446.05	364.71	401.05	*	190	45	250	40	250	35	190	35
101+51.00	14	445.61	364.27	400.61	*	190	45	250	40	250	35	190	35
101+61.00	15	445.17	363.83	400.17	*	190	45	250	40	250	35	190	35
101+71.00	16	444.73	363.39	399.73	*	190	45	250	40	250	35	190	35
101+81.00	17	444.29	362.95	399.29	*	190	45	250	40	250	35	190	35
101+91.00	18	443.85	362.51	398.85	*	190	45	250	40	250	35	190	35
102+01.00	19	443.41	362.07	398.41	*	190	45	250	40	250	35	190	35
102+11.00	20	442.86	361.53	397.86	*	190	45	250	40	250	35	190	35
102+21.00	21	442.31	360.98	397.31	*	190	45	250	40	250	35	190	35
102+31.00	22	441.77	360.43	396.77	*	190	45	250	40	250	35	190	35
102+41.00	23	441.22	359.89	396.22	*	190	45	250	40	250	35	190	35
102+51.00	24	440.67	359.34	395.67	*	190	45	250	40	250	35	190	35
102+61.00	25	440.12	358.79	395.12	*	190	45	250	40	250	35	190	35
102+71.00	26	439.58	358.24	394.58	*	190	45	250	40	250	35	190	35
102+81.00	27	439.03	357.69	394.03	*	190	45	250	40	250	35	190	35
102+91.00	28	438.48	357.15	393.48	*	190	45	250	40	250	35	190	35
103+01.00	29	437.92	356.59	392.92	*	190	45	250	40	250	35	190	35
103+11.00	30	437.37	356.03	392.37	*	190	45	250	40	250	35	190	35
103+21.00	31	436.81	355.47	391.81	*	190	45	250	40	250	35	190	35
103+31.00	32	436.25	354.91	391.25	*	190	45	250	40	250	35	190	35
103+41.00	33	435.69	354.36	390.69	*	190	45	250	40	250	35	190	35
103+51.00	34	435.13	353.80	390.13	*	190	45	250	40	250	35	190	35
103+61.00	35	434.57	353.24	389.57	*	190	45	250	40	250	35	190	35
103+71.00	36	434.01	352.68	389.01	*	190	45	250	40	250	35	190	35
103+81.00	37	433.46	352.12	388.46	*	190	45	250	40	250	35	190	35
103+91.00	38	432.90	351.56	387.90	*	190	45	250	40	250	35	190	35
104+01.00	39	432.34	351.01	387.34	*	190	45	250	40	250	35	190	35
104+11.00	40	431.78	350.45	386.78	*	190	45	250	40	250	35	190	35
104+21.00	41	431.22	349.89	386.22	*	190	45	250	40	250	35	190	35
104+31.00	42	430.66	349.33	385.66	*	190	45	250	40	250	35	190	35
104+41.00	43	430.11	348.77	385.11	*	190	45	250	40	250	35	190	35
104+51.00	44	429.55	348.22	384.55	*	190	45	250	40	250	35	190	35
104+61.00	45	429.00	347.66	384.00	*	190	45	250	40	250	35	190	35
104+71.00	46	428.45	347.11	383.45	*	190	45	250	40	250	35	190	35
104+81.00	47	427.89	346.56	382.89	*	190	45	250	40	250	35	190	35
104+91.00	48	427.34	346.01	382.34	*	190	45	250	40	250	35	190	35

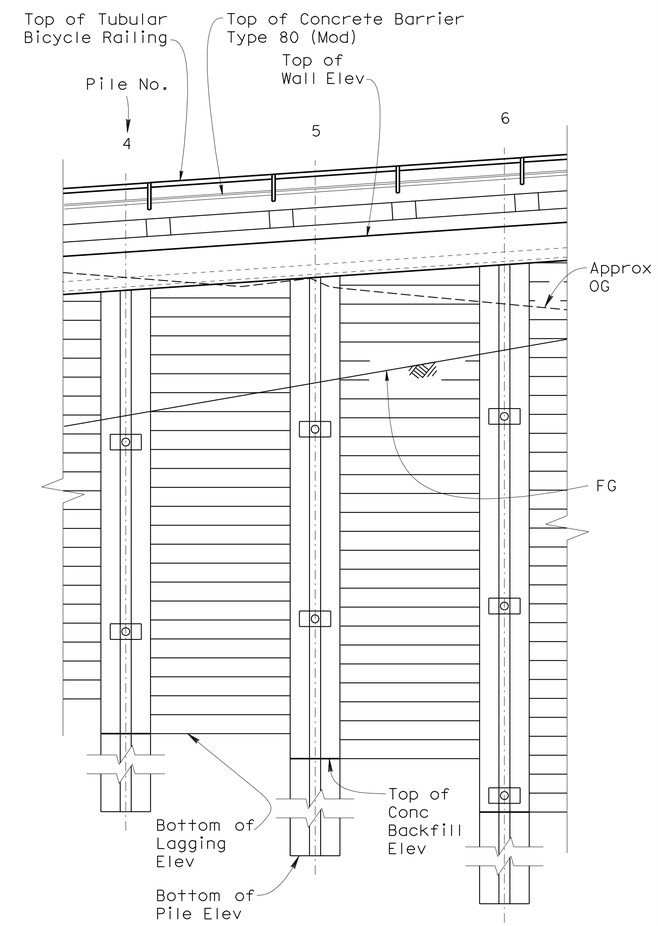

PART ELEVATION

1/4"=1'-0"

Notes:

1. The Bottom of Lagging Elevation denoted refers to the elevation in the lagging bay immediately to the right of the respective Pile Number.
2. * Designates that the Top of Concrete Backfill Elevation is the same as the Bottom of Lagging Elevation.

DESIGN	BY D. Nguyen Tan	CHECKED R. Melko	
DETAILS	BY K. Chonkria	CHECKED D. Nguyen Tan	
QUANTITIES	BY R. Melko	CHECKED H. Tuazon	

STATE OF CALIFORNIA
DEPARTMENT OF TRANSPORTATION

DIVISION OF ENGINEERING SERVICES
STRUCTURE DESIGN
DESIGN BRANCH 6

BRIDGE NO. 44E0100
POST MILE 22.6/22.8

DANI CREEK RETAINING WALL
DETAILS NO. 4

STRUCTURES DESIGN DETAIL SHEET (ENGLISH) (REV. 10/25/05)

ORIGINAL SCALE IN INCHES FOR REDUCED PLANS 0 1 2 3

CU 05 PROJECT ID 0500020037
EA 0T5601

DISREGARD PRINTS BEARING EARLIER REVISION DATES → 06-11-10 07-13-10 07-26-10

REVISION DATES

SHEET 12 OF 39

FILE => ot5601-p-pdt04.dgn

USERNAME => friehard DATE PLOTTED => 24-AUG-2010 TIME PLOTTED => 10:38

DIST	COUNTY	ROUTE	POST MILES TOTAL PROJECT	SHEET No	TOTAL SHEETS
05	Mon	1	22.6/22.8	60	86

REGISTERED CIVIL ENGINEER 07-28-10 DATE

8-16-10
PLANS APPROVAL DATE

REGISTERED PROFESSIONAL ENGINEER Don L. Nguyen-Tan No. C057510 Exp. 12-31-2011 CIVIL STATE OF CALIFORNIA

The State of California or its officers or agents shall not be responsible for the accuracy or completeness of electronic copies of this plan sheet.

PILE & TIEBACK DATA TABLE

Station Along RWLOL	Pile Number	Top of Wall Elev	Bottom of Pile Elev	Bottom of Lagging Elev (Note 1)	Top of Concrete Backfill Elev (Note 2)	T1=A		T2=B		T3=C		T3=D	
						T	Unbonded Length	T	Unbonded Length	T	Unbonded Length	T	Unbonded Length
feet		feet	feet	feet	feet	kips	feet	kips	feet	kips	feet	kips	feet
105+01.00	49	426.79	345.45	381.79	*	190	45	250	40	250	35	190	35
105+11.00	50	426.22	344.89	381.22	*	190	45	250	40	250	35	190	35
105+21.00	51	425.67	344.34	380.67	*	190	45	250	40	250	35	190	35
105+31.00	52	425.13	343.80	380.13	*	190	45	250	40	250	35	190	35
105+41.00	53	424.60	343.26	379.60	*	190	45	250	40	250	35	190	35
105+51.00	54	424.06	342.72	379.06	*	190	45	250	40	250	35	190	35
105+61.00	55	423.52	342.18	378.52	*	190	45	250	40	250	35	190	35
105+71.00	56	422.98	341.64	377.98	*	190	45	250	40	250	35	190	35
105+81.00	57	422.44	341.11	377.44	*	190	45	250	40	250	35	190	35
105+91.00	58	421.90	340.57	376.90	*	190	45	250	40	250	35	190	35
106+01.00	59	421.36	340.03	376.36	*	190	45	250	40	250	35	190	35
106+11.00	60	420.82	339.49	375.82	*	190	45	250	40	250	35	190	35
106+21.00	61	420.28	338.95	375.28	*	190	45	250	40	250	35	190	35
106+31.00	62	419.74	338.41	374.74	*	190	45	250	40	250	35	190	35
106+41.00	63	419.20	337.87	374.20	*	190	45	250	40	250	35	190	35
106+51.00	64	418.66	337.33	373.66	*	190	45	250	40	250	35	190	35
106+61.00	65	418.12	336.79	373.12	*	190	45	250	40	250	35	190	35
106+71.00	66	417.59	336.25	372.59	*	190	45	250	40	250	35	190	35
106+81.00	67	417.05	335.71	372.05	*	190	45	250	40	250	35	190	35
106+91.00	68	416.51	335.17	371.51	*	190	45	250	40	250	35	190	35
107+01.00	69	415.92	334.59	370.92	*	190	45	250	40	250	35	190	35
107+11.00	70	415.29	333.95	370.29	*	190	45	250	40	250	35	190	35
107+21.00	71	414.65	333.32	381.65	369.65	190	45	250	40	250	35	190	35
107+31.00	72	414.02	332.68	387.02	369.02	190	45	250	40	250	35		
107+41.00	73	413.38	332.05	392.38	368.38	190	45	250	40				
107+51.00	74	412.75	331.42	397.75	367.75	190	45	250	40				
107+61.00	75	412.12	330.78	397.12	367.12	190	45						
107+71.00	76	411.49	330.16	396.49	366.49	190	45						

Notes:

1. The Bottom of Lagging Elevation denoted refers to the elevation in the lagging bay immediately to the right of the respective Pile Number.
2. * Designates that the Top of Concrete Backfill Elevation is the same as the Bottom of Lagging Elevation.

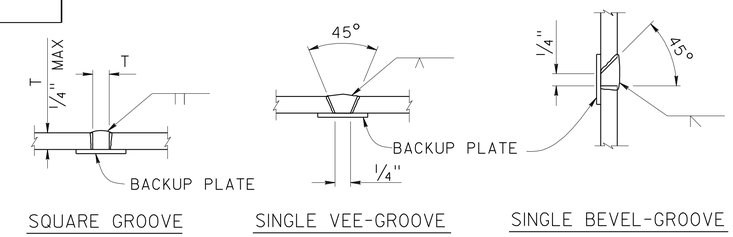

PILE WELDING DETAIL-BUTT JOINTS

NO SCALE

Notes:

a. Single vee-groove and square groove permitted for all positions

b. Single bevel-groove permitted for horizonal joints only

c. For purposes of non-destructive testing, pile shall be considered a main tension member from top of pile to 5 feet below bottom of lagging. The remaining embedded portion of the pile shall be considered a main compression member.

	BY	CHECKED
DESIGN	D. Nguyen Tan	R. Melko
DETAILS	K. Chonkria	D. Nguyen Tan
QUANTITIES	X	X

STATE OF CALIFORNIA
DEPARTMENT OF TRANSPORTATION

DIVISION OF ENGINEERING SERVICES
STRUCTURE DESIGN
DESIGN BRANCH 6

BRIDGE NO. 44E0100
POST MILE 22.6/22.8

DANI CREEK RETAINING WALL
DETAILS NO. 5

STRUCTURES DESIGN DETAIL SHEET (ENGLISH) (REV. 10/25/05)

ORIGINAL SCALE IN INCHES FOR REDUCED PLANS 0 1 2 3

CU 05 PROJECT ID 0500020037
EA OT5601

DISREGARD PRINTS BEARING EARLIER REVISION DATES → 06-04-10 07-13-10 07-26-10

REVISION DATES

SHEET 13 OF 39

FILE => ot5601-p-pdt05.dgn

USERNAME => trlenard DATE PLOTTED => 24-AUG-2010 TIME PLOTTED => 10:39

DIST.	COUNTY	ROUTE	POST MILE TOTAL PROJECT	SHEET NO.	TOTAL SHEETS
05	Mon	1	22.6/22.8	61	86

REGISTERED ENGINEER - CIVIL 07-28-10

8-16-10
PLANS APPROVAL DATE

REGISTERED PROFESSIONAL ENGINEER Don L. Nguyen-Tan No. C057510 Exp.12-31-2011 CIVIL STATE OF CALIFORNIA

The State of California or its officers or agents shall not be responsible for the accuracy or completeness of electronic copies of this plan sheet.

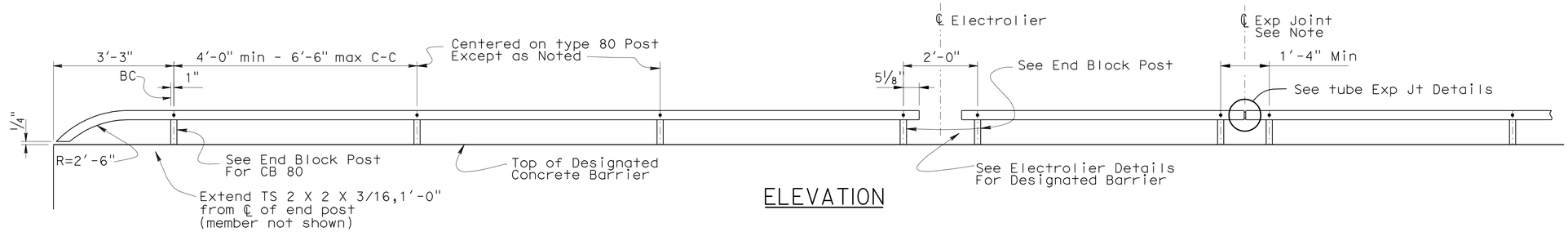

ELEVATION

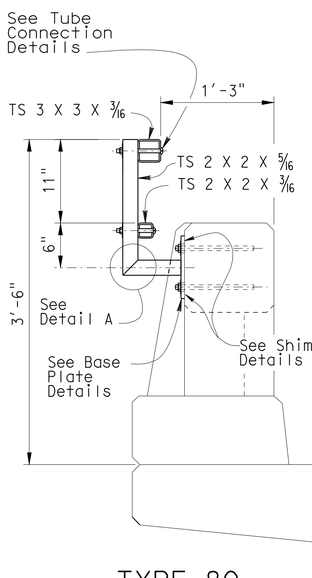

TYPE 80 END BLOCK POST

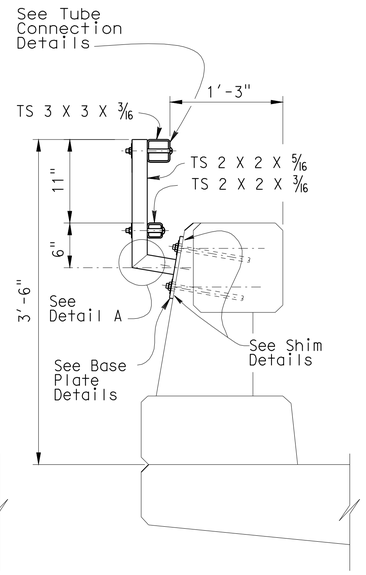

TYPE 80

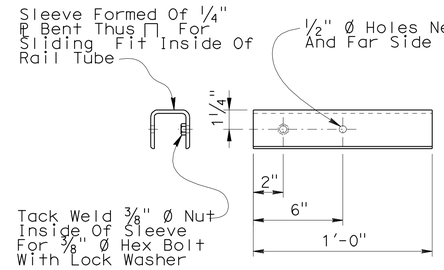

SLEEVE DETAIL

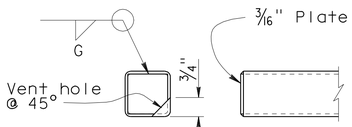

RAIL CAP DETAIL

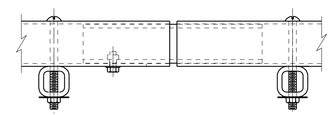

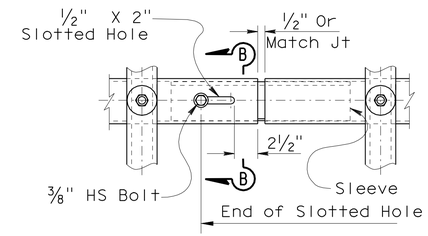

TUBE EXPANSION JOINT DETAILS

VIEW B-B

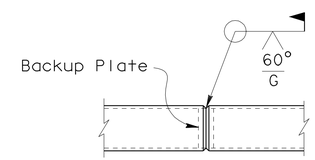

WELDED SPLICE DETAIL

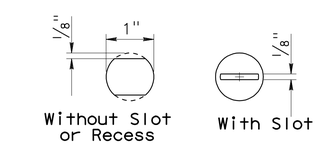

VIEW C-C

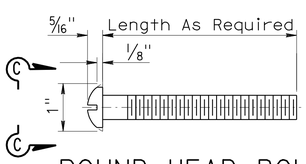

ROUND HEAD BOLT DETAIL

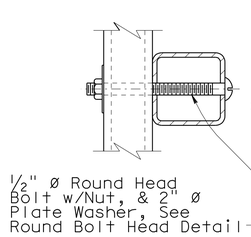

TUBE CONNECTION DETAIL

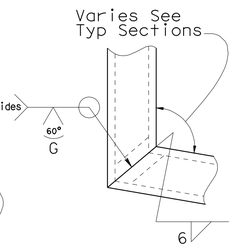

DETAIL A

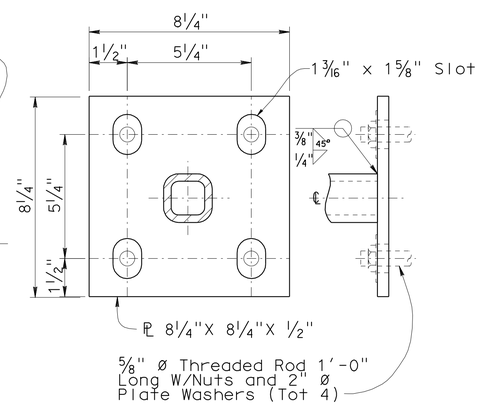

BASE PLATE DETAIL

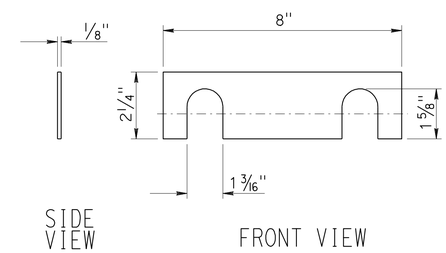

SHIM DETAILS
NO SCALE

NOTES:

1. Galvanize rail assembly after fabrication.
2. Post shall be normal to railing.
3. Rail tubes shall be shop bent or fabricated to fit horizontal curve when radius is less than 984'-0".
4. Tube splices shall be located in the tubes spanning deck or wall joints. Increase joint width in tubes to match expansion joint width and increase sleeve length correspondingly.
5. Top rail tube shall be continuous over not less than two posts except a short post spacing is permitted near deck or wall joints, electroliers, or other rail discontinuities as noted.
6. For details and reinforcement not shown see Standard Plan.
7. See project plans for limits of tubular bicycle railing.

DANI CREEK RETAINING WALL

TUBULAR BICYCLE RAILING

BARRIER RAILINGS TYPE 25, 80, 732 & 736

RELEASE DATE	8/07/06	DESIGN	BY TILLAT SATTER	CHECKED NEELIMA PATIL	RELEASED BY
FILE NO.	XS16-500	DETAILS	BY H.NGUYEN	CHECKED TILLAT SATTER	OFFICE CHIEF
		SUBMITTED	BY	DRAWING DATE 08/06	

DS OSD 2139M (METRIC) (REV. 3/5/97)

STATE OF CALIFORNIA DEPARTMENT OF TRANSPORTATION

DIVISION OF ENGINEERING SERVICES

BRIDGE NO. 44E0100
POST MILE 22.6/22.8

CU 05 EA 0T5601 PROJECT ID 0500020037

DISREGARD PRINTS BEARING EARLIER REVISION DATES

REVISION DATES (PRELIMINARY STAGE ONLY) 06-27-10 06-28-10 07-26-10

SHEET 14 OF 39

USERNAME => trlenard

FILE => ot5601-t-brdt.dgn

USERNAME => trlenard DATE PLOTTED => 24-AUG-2010 TIME PLOTTED => 10:39

DIST	COUNTY	ROUTE	POST MILES TOTAL PROJECT	SHEET No	TOTAL SHEETS
05	Mon	1	22.6/22.8	62	86

PROFESSIONAL GEOLOGIST 8-04-10

8-16-10
PLANS APPROVAL DATE

PROFESSIONAL GEOLOGIST
M. J. Jurasius
No. 8618
Exp. 3-31-11
STATE OF CALIFORNIA

The State of California or its officers or agents shall not be responsible for the accuracy or completeness of electronic copies of this plan sheet.

This LOTB sheet was prepared in accordance with the Caltrans Soil & Rock Logging, Classification, & Presentation Manual (June 2007). Borings B1-99, B2-99, B1-06, B2-06 & B3-06 were completed prior to the 2007 manual.

SURVEY CONTROL

Mon 1 PM-22.59 (not shown on plan)
Fnd 1" IP w/ Caltrans control PP
22.00' Rt. "ALN" Line, Rte 1
Sta. 96+77.17
N 1,900,559.85
E 5,809,770.34
Elev. = 471.53

Mon 1 PM-22.82 (see "FOUNDATION PLAN NO. 2)
Fnd 1" IP w/ Caltrans control PP
17.54' Lt. "ALN" Line, Rte 1
Sta. 108+59.47
N 1,900,598.56
E 5,808,597.45
Elev. = 406.77

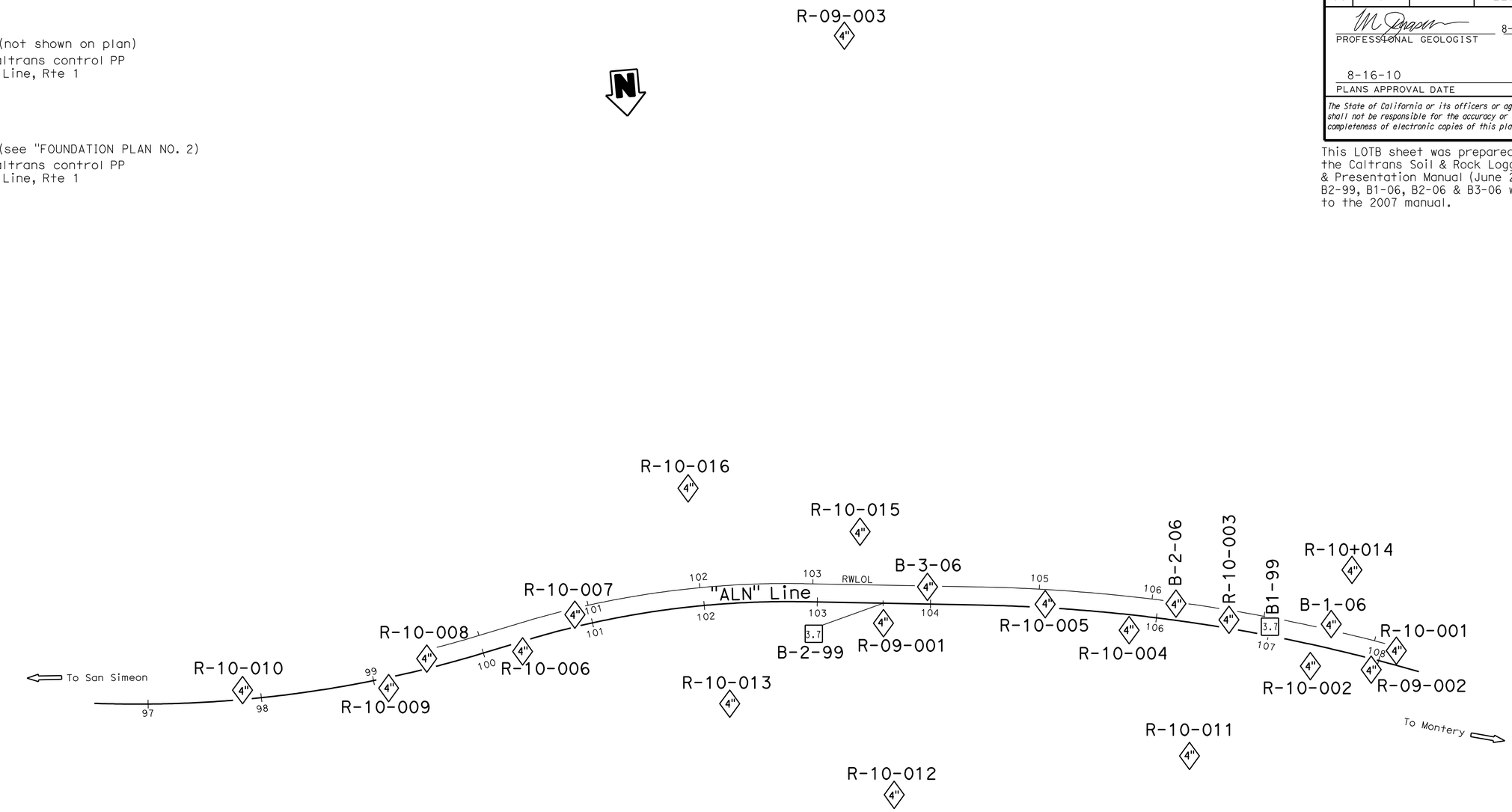

PLAN
1" = 50'

ENGINEERING SERVICES	GEOTECHNICAL SERVICES	STATE OF CALIFORNIA DEPARTMENT OF TRANSPORTATION	DIVISION OF ENGINEERING SERVICES STRUCTURE DESIGN DESIGN BRANCH 6	BRIDGE NO. 44E0100 POST MILES 22.6/22.8	DANI CREEK LANDSLIDE LOG OF TEST BORINGS 1 OF 25
FUNCTIONAL SUPERVISOR NAME: M. Finegan	DRAWN BY: F. Nguyen 6/10 CHECKED BY:	FIELD INVESTIGATION BY: M. Jurasius/ R. Turner/ W. Hoon/ B. Badeker			
OGS CIVIL LOG OF TEST BORINGS SHEET	ORIGINAL SCALE IN INCHES FOR REDUCED PLANS 0 1 2 3	CU 05 EA 0T5601	DISREGARD PRINTS BEARING EARLIER REVISION DATES	REVISION DATES 07-29-10 08-03-10	SHEET 15 OF 39

FILE => ot5601-z-lotb01.dgn

USERNAME => trienard DATE PLOTTED => 24-AUG-2010 TIME PLOTTED => 10:39

DIST	COUNTY	ROUTE	POST MILES TOTAL PROJECT	SHEET No	TOTAL SHEETS
05	Mon	1	22.6/22.8	63	86

PROFESSIONAL GEOLOGIST 8-04-10

PROFESSIONAL GEOLOGIST M. J. Jurasius No. 8618 Exp. 3-31-11 STATE OF CALIFORNIA

8-16-10
PLANS APPROVAL DATE

The State of California or its officers or agents shall not be responsible for the accuracy or completeness of electronic copies of this plan sheet.

This LOTB sheet was prepared in accordance with the Caltrans Soil & Rock Logging, Classification, & Presentation Manual (June 2007). Borings B1-99, B2-99, B1-06, B2-06 & B3-06 were completed prior to the 2007 manual.

FOR PLAN VIEW, SEE
"LOG OF TEST BORINGS" 1 OF 25

PROFILE
HOR. 1" = 10'
VER. 1" = 10'

ENGINEERING SERVICES	GEOTECHNICAL SERVICES	STATE OF CALIFORNIA DEPARTMENT OF TRANSPORTATION	DIVISION OF ENGINEERING SERVICES STRUCTURE DESIGN DESIGN BRANCH 6	BRIDGE NO. 44E0100 POST MILES 22.6/22.8	DANI CREEK LANDSLIDE LOG OF TEST BORINGS 2 OF 25
FUNCTIONAL SUPERVISOR NAME: M. Finegan	DRAWN BY: F. Nguyen 6/10 CHECKED BY: R. Turner	FIELD INVESTIGATION BY: M. Jurasius/ R. Turner/ W. Hoon/ B. Badeker	CU 05 EA 0T5601	DISREGARD PRINTS BEARING EARLIER REVISION DATES	REVISION DATES 07-28-10 08-03-10 SHEET 16 OF 39

OGS CIVIL LOG OF TEST BORINGS SHEET

ORIGINAL SCALE IN INCHES FOR REDUCED PLANS 0 1 2 3

FILE => ot5601-z-lotb02.dgn

USERNAME => trlenord DATE PLOTTED => 24-AUG-2010 TIME PLOTTED => 10:39

DIST	COUNTY	ROUTE	KILOMETER POST TOTAL PROJECT	SHEET No	TOTAL SHEETS
05	Mon	1	22.6/22.8	64	86

CERTIFIED ENGINEERING GEOLOGIST 8-04-10

PROFESSIONAL GEOLOGIST Mike Jurasius No. 8618 Exp. 3-31-11 STATE OF CALIFORNIA

8-16-10
PLANS APPROVAL DATE

The State of California or its officers or agents shall not be responsible for the accuracy or completeness of electronic copies of this plan sheet.

This LOTB sheet was prepared in accordance with the Caltrans Soil & Rock Logging, Classification, & Presentation Manual (June 2007). Borings B1-99, B2-99, B1-06, B2-06 & B3-06 were completed prior to the 2007 manual.

FOR PLAN VIEW, SEE
"LOG OF TEST BORINGS" 1 OF 25

9.2' Rt Sta 99+11.8
"ALN" Line

R-10-009

457.44'

460 450 440 430 420 410 400 390 380 370 360 350 340 330 320 310

4" ASPHALT CONCRETE (12").

Well-graded SAND with GRAVEL (SW); medium dense; dark yellowish brown; moist; mostly from coarse to fine angular SAND; little subangular GRAVEL; few fines; (FILL).

11 | 1.4

METAMORPHIC ROCK (METAGRAYWACKE); fine grained; very dark bluish gray; slightly weathered to fresh; hard; very intensely fractured.

REC=50% RQD=0% REC=13% RQD=0% REC=40% RQD=0% REC=36% RQD=% REC=40% RQD=0% REC=72% RQD=0% REC=40% RQD=0% REC=53% RQD=0% REC=75% RQD=0% REC=48% RQD=0% REC=71% RQD=0% REC=73% RQD=0% REC=71% RQD=0% REC=73% RQD=13% REC=66% RQD=0% REC=68% RQD=0% REC=100% RQD=0% REC=76% RQD=0% REC=88% RQD=0%

9 | 1.4

REC=56% RQD=8% REC=18% RQD=0% REC=50% RQD=0% REC=30% RQD=0% REC=71% RQD=10% REC=6% RQD=0% REC=13% RQD=0% REC=60% RQD=0% REC=83% RQD=13% REC=64% RQD=0% REC=0% RQD=0% REC=27% RQD=0% REC=64% RQD=0% REC=20% RQD=0% REC=30% RQD=0% REC=92% RQD=0% REC=25% RQD=0% REC=17% RQD=0% REC=16% RQD=0% REC=6% RQD=0% REC=66% RQD=0% REC=22% RQD=0% REC=64% RQD=0% REC=73% RQD=0% REC=30% RQD=0% REC=76% RQD=0%

-intensely fractured.

METAMORPHIC ROCK (GRAPHITIC METASILTSTONE); fine grained; foliated; dark bluish gray; fresh; hard; moderately to intensely fractured.

-decomposed; (Elastic SILT (MH)).

-(Poorly graded GRAVEL with SILT and SAND (GP-GM); mostly fine angular GRAVEL; some from coarse to fine angular SAND; little fines).

3-22-10
Terminated at Elev 306.64'
ERi = 93%

99+00 100+00 101+00

PROFILE
HOR. 1" = 10'
VER. 1" = 10'

ENGINEERING SERVICES	GEOTECHNICAL SERVICES	STATE OF CALIFORNIA DEPARTMENT OF TRANSPORTATION	DIVISION OF ENGINEERING SERVICES STRUCTURE DESIGN DESIGN BRANCH 6	BRIDGE NO. 44E0100 POST MILES 22.6/22.8	DANI CREEK LANDSLIDE LOG OF TEST BORINGS 3 OF 25
FUNCTIONAL SUPERVISOR NAME: M. Finegan	DRAWN BY: F. Nguyen 6/10 CHECKED BY: R. Turner	FIELD INVESTIGATION BY: M. Jurasius/ R. Turner/ W. Hoon/ B. Badeker			

OGS CIVIL LOG OF TEST BORINGS SHEET

ORIGINAL SCALE IN INCHES FOR REDUCED PLANS 0 1 2 3

CU 05
EA 0T5601

DISREGARD PRINTS BEARING EARLIER REVISION DATES 07-30-10 08-03-10

REVISION DATES

SHEET 17 OF 39

FILE => ot5601-z-1otb03.dgn

USERNAME => friehard DATE PLOTTED => 24-AUG-2010 TIME PLOTTED => 10:39

DIST	COUNTY	ROUTE	POST MILES TOTAL PROJECT	SHEET No	TOTAL SHEETS
05	Mon	1	22.6/22.8	65	86

PROFESSIONAL GEOLOGIST 8-04-10

8-16-10
PLANS APPROVAL DATE

PROFESSIONAL GEOLOGIST M. J. Jurasius No. 8618 Exp. 3-31-11 STATE OF CALIFORNIA

The State of California or its officers or agents shall not be responsible for the accuracy or completeness of electronic copies of this plan sheet.

This LOTB sheet was prepared in accordance with the Caltrans Soil & Rock Logging, Classification, & Presentation Manual (June 2007). Borings B1-99, B2-99, B1-06, B2-06 & B3-06 were completed prior to the 2007 manual.

FOR PLAN VIEW, SEE
"LOG OF TEST BORINGS" 1 OF 25

PROFILE
HOR. 1" = 10'
VER. 1" = 10'

ENGINEERING SERVICES		GEOTECHNICAL SERVICES	STATE OF CALIFORNIA DEPARTMENT OF TRANSPORTATION	DIVISION OF ENGINEERING SERVICES STRUCTURE DESIGN DESIGN BRANCH 6	BRIDGE NO. 44E0100 POST MILES 22.6/22.8	DANI CREEK LANDSLIDE LOG OF TEST BORINGS 4 OF 25
FUNCTIONAL SUPERVISOR NAME: M. Finegan	DRAWN BY: F. Nguyen 6/10 CHECKED BY: R. Turner	FIELD INVESTIGATION BY: M. Jurasius/ R. Turner/ W. Hoon/ B. Badeker				

OGS CIVIL LOG OF TEST BORINGS SHEET

ORIGINAL SCALE IN INCHES FOR REDUCED PLANS 0 1 2 3

CU 05
EA 0T5601

DISREGARD PRINTS BEARING EARLIER REVISION DATES 07-30-10

REVISION DATES

SHEET 18 OF 39

FILE => ot5601-z-lotb04.dgn

USERNAME => friehard DATE PLOTTED => 24-AUG-2010 TIME PLOTTED => 10:39

DIST	COUNTY	ROUTE	POST MILES TOTAL PROJECT	SHEET No	TOTAL SHEETS
05	Mon	1	22.6/22.8	66	86

PROFESSIONAL GEOLOGIST 8-04-10

PROFESSIONAL GEOLOGIST M. J. Jurasius No. 8618 Exp. 3-31-11 STATE OF CALIFORNIA

8-16-10
PLANS APPROVAL DATE

The State of California or its officers or agents shall not be responsible for the accuracy or completeness of electronic copies of this plan sheet.

This LOTB sheet was prepared in accordance with the Caltrans Soil & Rock Logging, Classification, & Presentation Manual (June 2007). Borings B1-99, B2-99, B1-06, B2-06 & B3-06 were completed prior to the 2007 manual.

FOR PLAN VIEW, SEE
"LOG OF TEST BORINGS" 1 OF 25

8.6' Rt Sta 100+33.6 "ALN" Line

R-10-006

450.72'

4"

ASPHALT CONCRETE.
CLAYEY SAND with GRAVEL (SC); brown; dry; mostly from fine to coarse SAND; some subangular fine GRAVEL; some medium plasticity fines.
-becomes gray.

METAMORPHIC ROCK (METAGRAYWACKE); fine grained; gray; very intensely weathered to decomposed; hard; very intensely fractured; 50% fractures totally healed with calcite; (Elastic SILT with SAND and GRAVEL (MH); mostly medium plasticity fines; little from fine to coarse SAND; little fine to medium subangular GRAVEL).

-dark gray; intensely fractured.
-very intensely fractured.

-greenish gray.
-dark gray.

-intensely fractured.
-moderately to intensely fractured.

-very intensely fractured.

-decomposed.

REC	RQD
40%	
57%	
100%	0%
60%	0%
47%	0%
47%	0%
43%	0%
53%	0%
20%	0%
20%	0%
43%	0%
67%	0%
47%	0%
83%	0%
63%	0%
30%	0%
47%	0%
80%	0%
73%	0%
90%	0%
87%	0%
90%	0%
50%	0%
69%	0%
72%	0%
53%	36%
100%	0%
70%	0%
53%	0%
73%	0%
0%	0%
20%	0%
45%	0%
0%	0%
50%	0%
43%	0%
47%	0%
37%	0%
83%	0%
43%	0%
93%	0%
43%	0%
0%	0%
40%	0%
0%	0%
23%	0%
0%	0%
13%	0%
63%	0%
50%	0%
60%	0%
59%	0%

3-24-10
Terminated at Elev 306.64'
ERi = 74%

450 440 430 420 410 400 390 380 370 360 350 340 330 320 310

100+00 101+00 102+00

PROFILE
HOR. 1" = 10'
VER. 1" = 10'

ENGINEERING SERVICES	GEOTECHNICAL SERVICES	STATE OF CALIFORNIA DEPARTMENT OF TRANSPORTATION	DIVISION OF ENGINEERING SERVICES STRUCTURE DESIGN	BRIDGE NO. 44E0100	DANI CREEK LANDSLIDE
FUNCTIONAL SUPERVISOR	DRAWN BY: F. Nguyen 6/10	FIELD INVESTIGATION BY: M. Jurasius/ R. Turner/ W. Hoon/ B. Badeker	DESIGN BRANCH 6	POST MILES 22.6/22.8	LOG OF TEST BORINGS 5 OF 25
NAME: M. Finegan	CHECKED BY: R. Turner				

OGS CIVIL LOG OF TEST BORINGS SHEET

ORIGINAL SCALE IN INCHES FOR REDUCED PLANS 0 1 2 3

CU 05
EA 0T5601

DISREGARD PRINTS BEARING EARLIER REVISION DATES 07-26-10 08-04-10

REVISION DATES

SHEET 19 OF 39

FILE => ot5601-z-lotb05.dgn

USERNAME => trlenard DATE PLOTTED => 24-AUG-2010 TIME PLOTTED => 10:39

DIST	COUNTY	ROUTE	POST MILES TOTAL PROJECT	SHEET No	TOTAL SHEETS
05	Mon	1	22.6/22.8	67	86

PROFESSIONAL GEOLOGIST 8-04-10

PROFESSIONAL GEOLOGIST M. J. Jurasius No. 8618 Exp. 3-31-11 STATE OF CALIFORNIA

8-16-10
PLANS APPROVAL DATE

The State of California or its officers or agents shall not be responsible for the accuracy or completeness of electronic copies of this plan sheet.

This LOTB sheet was prepared in accordance with the Caltrans Soil & Rock Logging, Classification, & Presentation Manual (June 2007). Borings B1-99, B2-99, B1-06, B2-06 & B3-06 were completed prior to the 2007 manual.

FOR PLAN VIEW, SEE
"LOG OF TEST BORINGS" 1 OF 25

10.5' Lt Sta 100+86.5
"ALN" Line

R-10-007

448.21'

4" ASPHALT CONCRETE alternating with road base.

Well-graded GRAVEL with SILT and SAND (GW-GM); grayish brown; moist; mostly from coarse to fine angular GRAVEL; some from coarse to fine angular SAND; few fines; (FILL).

METAMORPHIC ROCK (METAGRAYWACKE); dark bluish gray; from decomposed to fresh; hard; intensely fractured; (Well-graded GRAVEL with SAND (GW); moist; mostly from coarse to fine angular GRAVEL; some from coarse to fine angular SAND; few fines).

METAMORPHIC ROCK (GRAPHITIC METASILTSTONE); fine grained; foliated; very dark bluish gray; fresh; hard; intensely fractured.

-(Well-graded GRAVEL with CLAY and SAND (GW-GC); bluish gray to very dark bluish gray; moist; mostly from coarse to fine angular GRAVEL; some from coarse to fine angular SAND; little fines).

-foliated.

-decomposed; (CLAYEY SAND with GRAVEL (SC)).

-(Well graded GRAVEL with SAND (GW); bluish gray; moist; mostly from coarse to fine angular GRAVEL; little from coarse to fine angular SAND; trace fines).

Elev	REC	RQD
448.21	73%	0%
	35%	0%
	78%	0%
	58%	0%
	76%	0%
	28%	0%
	25%	0%
	25%	0%
	86%	0%
	76%	0%
	11%	0%
	90%	0%
	60%	0%
	75%	0%
	70%	0%
	76%	0%
	55%	0%
	35%	0%
	100%	0%
	50%	0%
	50%	0%
	87%	0%
	82%	0%
	42%	0%
	42%	0%
	68%	0%
	92%	0%
	60%	0%
	12%	0%
	40%	0%
	14%	0%
	43%	0%
	32%	0%
	82%	0%
	28%	0%
	83%	0%
	73%	0%
	83%	0%
	86%	0%
	56%	0%
	60%	0%
	65%	0%
	48%	0%
	10%	0%
	20%	0%
	100%	0%
	60%	0%
	29%	0%
	87%	0%

3-17-10
Terminated at Elev 299.21'
ERi = 93%

100+50 101+50 102+50

PROFILE
HOR. 1" = 10'
VER. 1" = 10'

ENGINEERING SERVICES	GEOTECHNICAL SERVICES	STATE OF CALIFORNIA DEPARTMENT OF TRANSPORTATION	DIVISION OF ENGINEERING SERVICES STRUCTURE DESIGN DESIGN BRANCH 6	BRIDGE NO. 44E0100 POST MILES 22.6/22.8	DANI CREEK LANDSLIDE LOG OF TEST BORINGS 6 OF 25
FUNCTIONAL SUPERVISOR NAME: M. Finegan	DRAWN BY: F. Nguyen 6/10 CHECKED BY: R. Turner	FIELD INVESTIGATION BY: M. Jurasius/ R. Turner/ W. Hoon/ B. Badeker			

OGS CIVIL LOG OF TEST BORINGS SHEET

ORIGINAL SCALE IN INCHES FOR REDUCED PLANS 0 1 2 3

CU 05
EA 0T5601

DISREGARD PRINTS BEARING EARLIER REVISION DATES 07-29-10 08-04-10

REVISION DATES

SHEET 20 OF 39

FILE => ot5601-z-lotb06.dgn

USERNAME => trienord DATE PLOTTED => 24-AUG-2010 TIME PLOTTED => 10:39

DIST	COUNTY	ROUTE	POST MILES TOTAL PROJECT	SHEET No	TOTAL SHEETS
05	Mon	1	22.6/22.8	68	86

PROFESSIONAL GEOLOGIST 8-04-10

8-16-10
PLANS APPROVAL DATE

PROFESSIONAL GEOLOGIST M. J. Jurasius No. 8618 Exp. 3-31-11 STATE OF CALIFORNIA

The State of California or its officers or agents shall not be responsible for the accuracy or completeness of electronic copies of this plan sheet.

This LOTB sheet was prepared in accordance with the Caltrans Soil & Rock Logging, Classification, & Presentation Manual (June 2007). Borings B1-99, B2-99, B1-06, B2-06 & B3-06 were completed prior to the 2007 manual.

FOR PLAN VIEW, SEE
"LOG OF TEST BORINGS" 1 OF 25

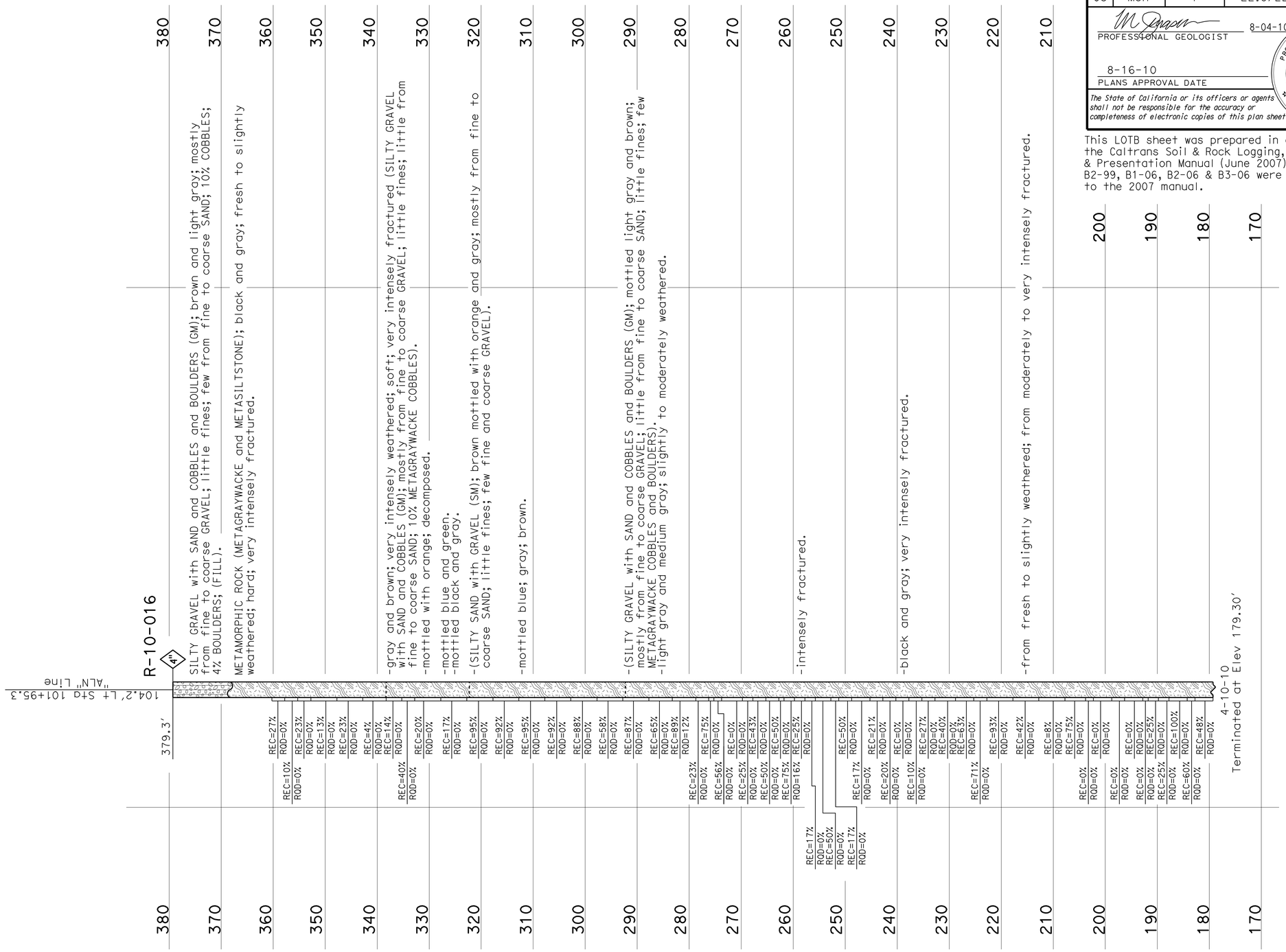

ENGINEERING SERVICES	GEOTECHNICAL SERVICES	STATE OF CALIFORNIA DEPARTMENT OF TRANSPORTATION	DIVISION OF ENGINEERING SERVICES STRUCTURE DESIGN	BRIDGE NO. 44E0100	DANI CREEK LANDSLIDE
FUNCTIONAL SUPERVISOR	DRAWN BY: F. Nguyen 6/10	FIELD INVESTIGATION BY: M. Jurasius/ R. Turner/ W. Hoon/ B. Badeker	DESIGN BRANCH 6	POST MILES 22.6/22.8	LOG OF TEST BORINGS 7 OF 25
NAME: M. Finegan	CHECKED BY: R. Turner				

OGS CIVIL LOG OF TEST BORINGS SHEET

ORIGINAL SCALE IN INCHES FOR REDUCED PLANS 0 1 2 3

CU 05
EA 0T5601

DISREGARD PRINTS BEARING EARLIER REVISION DATES 07-30-10 08-04-10

REVISION DATES

SHEET 21 OF 39

FILE => ot5601-z-lotb07.dgn

USERNAME => friehard DATE PLOTTED => 24-AUG-2010 TIME PLOTTED => 10:39

FOR PLAN VIEW, SEE
"LOG OF TEST BORINGS" 1 OF 25

122.0' Rt Sta 102+14.4
"ALN" Line

R-10-013

513.10'

4"

510 — Well-graded GRAVEL with SILT and SAND (GW-GM); dark yellowish brown; moist; mostly from coarse to fine angular to subangular GRAVEL; some from coarse to fine angular SAND; little fines; (COLLUVIUM).

500 — METAMORPHIC ROCK (METAGRAYWACKE); massive; dark bluish gray; fresh to slightly weathered; hard; slightly fractured; (F1, variable spacing, closed, thin filling of calcite, hard, totally healed, moderately rough).

490 — -from moderately to intensely fractured.

480 — -from decomposed to slightly weathered; intensely fractured; (Well-graded GRAVEL with SILT and SAND (GW-GM)).

470 — -moderately fractured.

460 — METAMORPHIC ROCK (GRAPHITIC METASILTSTONE); fine grained; foliated; bluish black; fresh; hard; intensely fractured; totally healed calcite joints; (Well-graded GRAVEL with SILT and SAND (GW-GM); moist; mostly from coarse to fine angular GRAVEL; some from coarse to fine SAND; little fines).

450

440 — -dark bluish gray.

430

420

410 — METAMORPHIC ROCK (METAGRAYWACKE); fine grained; dark bluish gray to bluish gray; fresh; very hard; intensely fractured.

400 — METAMORPHIC ROCK (GRAPHITIC METASILTSTONE); foliated; from fresh to decomposed; from soft to hard; intensely fractured; (SILTY SAND with GRAVEL (SM); mostly from coarse to fine angular SAND; some from coarse to fine angular GRAVEL; little fines).

390

380

370

360 — -decomposed; (Elastic SILT with SAND (MH)).

350

340

330

320

310

REC=70%	RQD=12%
REC=47%	RQD=0%
REC=20%	RQD=0%
REC=33%	RQD=0%
REC=25%	RQD=0%
REC=0%	RQD=0%
REC=55%	RQD=0%
REC=40%	RQD=0%
REC=0%	RQD=0%
REC=42%	RQD=0%
REC=0%	RQD=0%
REC=75%	RQD=0%
REC=0%	RQD=0%
REC=0%	RQD=0%
REC=0%	RQD=0%
REC=6%	RQD=0%
REC=0%	RQD=0%
REC=0%	RQD=0%
REC=0%	RQD=0%
REC=30%	RQD=0%
REC=0%	RQD=0%
REC=10%	RQD=0%
REC=0%	RQD=0%
REC=25%	RQD=0%
REC=0%	RQD=0%
REC=0%	RQD=0%
REC=67%	RQD=0%
REC=60%	RQD=0%
REC=70%	RQD=0%
REC=0%	RQD=0%
REC=5%	RQD=0%
REC=30%	RQD=0%
REC=82%	RQD=0%
REC=70%	RQD=0%
REC=3%	RQD=0%
REC=55%	RQD=0%
REC=30%	RQD=0%
REC=48%	RQD=0%
REC=46%	RQD=0%
REC=65%	RQD=0%
REC=50%	RQD=27%
REC=90%	RQD=67%
REC=48%	RQD=0%
REC=28%	RQD=0%
REC=20%	RQD=0%
REC=37%	RQD=0%
REC=88%	RQD=60%
REC=20%	RQD=0%
REC=45%	RQD=0%
REC=90%	RQD=0%
REC=10%	RQD=0%
REC=20%	RQD=0%
REC=25%	RQD=0%
REC=6%	RQD=0%
REC=50%	RQD=0%
REC=20%	RQD=0%
REC=40%	RQD=0%
REC=0%	RQD=0%
REC=15%	RQD=0%
REC=0%	RQD=0%
REC=90%	RQD=0%
REC=30%	RQD=0%
REC=72%	RQD=0%
REC=70%	RQD=0%
REC=83%	RQD=0%
REC=48%	RQD=0%
REC=10%	RQD=0%
REC=0%	RQD=0%
REC=5%	RQD=0%
REC=80%	RQD=0%
REC=65%	RQD=0%
REC=30%	RQD=0%
REC=0%	RQD=0%
REC=30%	RQD=0%
REC=100%	RQD=0%
REC=35%	RQD=0%
REC=70%	RQD=0%

4-08-10
Terminated at Elev 313.6'
ERi = 74%

PROFILE
HOR. 1" = 10'
VER. 1" = 10'

103+50 — 104+50

This LOTB sheet was prepared in accordance with the Caltrans Soil & Rock Logging, Classification, & Presentation Manual (June 2007). Borings B1-99, B2-99, B1-06, B2-06 & B3-06 were completed prior to the 2007 manual.

PROFESSIONAL GEOLOGIST 8-04-10

8-16-10
PLANS APPROVAL DATE

PROFESSIONAL GEOLOGIST
M. J. Jurasius
No. 8618
Exp. 3-31-11
STATE OF CALIFORNIA

The State of California or its officers or agents shall not be responsible for the accuracy or completeness of electronic copies of this plan sheet.

DIST	COUNTY	ROUTE	POST MILES TOTAL PROJECT	SHEET NO	TOTAL SHEETS
05	Mon	1	22.6/22.8	69	86

ENGINEERING SERVICES

GEOTECHNICAL SERVICES

FUNCTIONAL SUPERVISOR
NAME: M. Finegan

DRAWN BY: F. Nguyen 6/10
CHECKED BY: R. Turner

FIELD INVESTIGATION BY:
M. Jurasius/
R. Turner/ W. Hoon/ B. Badeker

ORIGINAL SCALE IN INCHES FOR REDUCED PLANS
0 1 2 3

STATE OF CALIFORNIA
DEPARTMENT OF TRANSPORTATION

DIVISION OF ENGINEERING SERVICES
STRUCTURE DESIGN
DESIGN BRANCH 6

BRIDGE NO. 44E0100
POST MILES 22.6/22.8

DANI CREEK LANDSLIDE

LOG OF TEST BORINGS 8 OF 25

DISREGARD PRINTS BEARING EARLIER REVISION DATES

REVISION DATES

SHEET 22 OF 39

CU 05
EA 0T5601

ODS CIVIL LOG OF TEST BORINGS SHEET

FILE => 0t5601-z-lotb08.dgn

USERNAME => trlenard DATE PLOTTED => 24-AUG-2010 TIME PLOTTED => 10:39

DIST	COUNTY	ROUTE	POST MILES TOTAL PROJECT	SHEET No	TOTAL SHEETS
05	Mon	1	22.6/22.8	70	86

PROFESSIONAL GEOLOGIST 8-04-10

PROFESSIONAL GEOLOGIST M. J. Jurasius No. 8618 Exp. 3-31-11 STATE OF CALIFORNIA

8-16-10
PLANS APPROVAL DATE

The State of California or its officers or agents shall not be responsible for the accuracy or completeness of electronic copies of this plan sheet.

This LOTB sheet was prepared in accordance with the Caltrans Soil & Rock Logging, Classification, & Presentation Manual (June 2007). Borings B1-99, B2-99, B1-06, B2-06 & B3-06 were completed prior to the 2007 manual.

FOR PLAN VIEW, SEE
"LOG OF TEST BORINGS" 1 OF 25

499.9' Lt Sta 103+14.4
"ALN" Line

R-09-003

220.0'

4" Poorly graded GRAVEL with SILT and SAND (GP-GM), dark reddish brown; dry; mostly from coarse to fine angular to subangular GRAVEL; some from coarse to fine angular SAND; few fines; ORGANICS (roots); (COLLUVIUM).

METAMORPHIC ROCK (METAGRAYWACKE); fine grained; bluish gray to very dark bluish gray; from slightly to very intensely weathered; extremely hard; very intensely fractured; (CLAYEY GRAVEL with SAND (GC); moist; mostly from coarse to fine angular GRAVEL; some from coarse to fine angular SAND; little plasticity fines).

METAMORPHIC ROCK (GRAPHITIC METASILTSTONE); fine grained; dark bluish gray; from intensely weathered to fresh; extremely hard; very intensely fractured; (CLAYEY GRAVEL with SAND (GC); moist; mostly from coarse to fine angular GRAVEL; some from coarse to fine angular SAND; little fines).

METAMORPHIC ROCK (METAGRAYWACKE); fine grained; dark bluish gray; from intensely weathered to fresh; extremely hard; very intensely fractured to intensely fractured; (Poorly graded GRAVEL with SILT and SAND (GP-GM); moist; mostly from coarse to fine angular GRAVEL; some medium and fine angular SAND; little fines).

METAMORPHIC ROCK (GRAPHITIC METASILTSTONE); fine grained; greenish black; from intensely weathered to fresh; from hard to moderately soft; very intensely fractured; (SILT with GRAVEL (ML); moist; mostly fines; some from coarse to fine subangular to angular GRAVEL; little from coarse to fine subangular SAND).

-METAMORPHIC ROCK (METAGRAYWACKE).

-METAMORPHIC ROCK (GRAPHITIC METASILTSTONE); very intensely fractured.

METAMORPHIC ROCK (METAGRAYWACKE); fine grained; very dark bluish gray; slightly weathered to fresh; extremely hard; very intensely fractured.

METAMORPHIC ROCK (GRAPHITIC METASILTSTONE); fine grained; dark bluish gray; slightly weathered to fresh; extremely hard; very intensely fratured; (CLAYEY GRAVEL with SAND (GC); moist; mostly from coarse to fine angular GRAVEL; little from coarse to fine SAND; some fines).

-from moderately hard to moderately soft.

REC=14% RQD=0% REC=20% RQD=0% REC=10% RQD=0% REC=24% RQD=0% REC=16% RQD=0% REC=12% RQD=0% REC=68% RQD=0% REC=44% RQD=0% REC=40% RQD=0% REC=88% RQD=0% REC=56% RQD=0% REC=91% RQD=7% REC=71% REC=60% RQD=0% REC=100% RQD=0% REC=100% RQD=0% REC=71% RQD=0% REC=10% RQD=0% REC=58% RQD=0% REC=30% RQD=0% REC=100% RQD=0% REC=89% RQD=0% REC=86% REC=89% RQD=0% REC=85% RQD=0% REC=57% RQD=0% REC=69% RQD=0% REC=100% REC=57% RQD=0% RQD=10% REC=40% RQD=0% REC=42% RQD=0% REC=82% RQD=0% REC=12% RQD=0% REC=88% RQD=0% REC=37% RQD=0% REC=67% REC=48% RQD=0% RQD=0% REC=84% RQD=13% REC=85% RQD=62% REC=100% RQD=95% REC=100% RQD=80% REC=73% RQD=0%

5-16-09
Terminated at Elev 69.8'

220 210 200 190 180 170 160 150 140 130 120 110 100 90 80 70

103+00 103+50 104+00

PROFILE
Horiz 1" = 5'
Vert 1" = 10'

ENGINEERING SERVICES	GEOTECHNICAL SERVICES	STATE OF CALIFORNIA DEPARTMENT OF TRANSPORTATION	DIVISION OF ENGINEERING SERVICES STRUCTURE DESIGN DESIGN BRANCH 6	BRIDGE NO. 44E0100 POST MILES 22.6/22.8	DANI CREEK LANDSLIDE LOG OF TEST BORINGS 9 OF 25
FUNCTIONAL SUPERVISOR NAME: M. Finegan	DRAWN BY: F. Nguyen 6/10 CHECKED BY: R. Turner	FIELD INVESTIGATION BY: M. Jurasius/ R. Turner/ W. Hoon/ B. Badeker	CU 05 EA 0T5601	DISREGARD PRINTS BEARING EARLIER REVISION DATES 07-26-10 08-04-10	SHEET 23 OF 39

OGS CIVIL LOG OF TEST BORINGS SHEET

ORIGINAL SCALE IN INCHES FOR REDUCED PLANS 0 1 2 3

FILE => ot5601-z-lotb09.dgn

USERNAME => trlenard DATE PLOTTED => 24-AUG-2010 TIME PLOTTED => 10:39

DIST	COUNTY	ROUTE	POST MILES TOTAL PROJECT	SHEET No	TOTAL SHEETS
05	Mon	1	22.6/22.8	71	86

PROFESSIONAL GEOLOGIST 8-04-10

8-16-10
PLANS APPROVAL DATE

PROFESSIONAL GEOLOGIST
M. J. Jurasius
No. 8618
Exp. 3-31-11
STATE OF CALIFORNIA

The State of California or its officers or agents shall not be responsible for the accuracy or completeness of electronic copies of this plan sheet.

This LOTB sheet was prepared in accordance with the Caltrans Soil & Rock Logging, Classification, & Presentation Manual (June 2007). Borings B1-99, B2-99, B1-06, B2-06 & B3-06 were completed prior to the 2007 manual.

FOR PLAN VIEW, SEE
"LOG OF TEST BORINGS" 1 OF 25

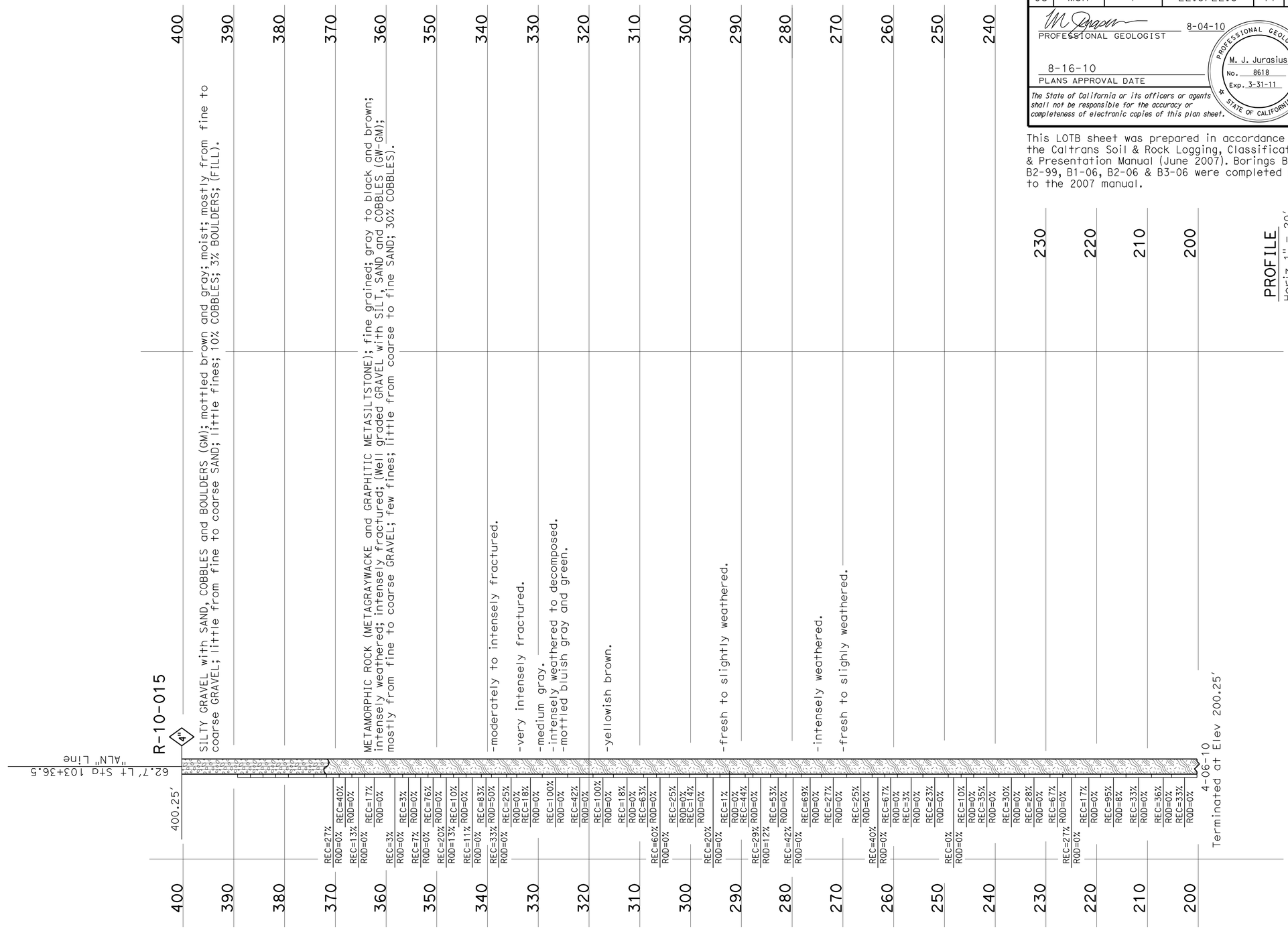

ENGINEERING SERVICES	GEOTECHNICAL SERVICES	STATE OF CALIFORNIA DEPARTMENT OF TRANSPORTATION	DIVISION OF ENGINEERING SERVICES STRUCTURE DESIGN	BRIDGE NO. 44E0100	DANI CREEK LANDSLIDE
FUNCTIONAL SUPERVISOR	DRAWN BY: F. Nguyen 6/10	FIELD INVESTIGATION BY: M. Jurasius/ R. Turner/ W. Hoon/ B. Badeker	DESIGN BRANCH 6	POST MILES 22.6/22.8	LOG OF TEST BORINGS 10 OF 25
NAME: M. Finegan	CHECKED BY: R. Turner		CU 05 EA 0T5601		

OGS CIVIL LOG OF TEST BORINGS SHEET

ORIGINAL SCALE IN INCHES FOR REDUCED PLANS 0 1 2 3

DISREGARD PRINTS BEARING EARLIER REVISION DATES 07-30-10 08-04-10

REVISION DATES

SHEET 24 OF 39

FILE => ot5601-z-lotb10.dgn

USERNAME => trlenard DATE PLOTTED => 24-AUG-2010 TIME PLOTTED => 10:40

DIST	COUNTY	ROUTE	POST MILES TOTAL PROJECT	SHEET No	TOTAL SHEETS
05	Mon	1	22.6/22.8	72	86

PROFESSIONAL GEOLOGIST 8-04-10

PROFESSIONAL GEOLOGIST M. J. Jurasius No. 8618 Exp. 3-31-11 STATE OF CALIFORNIA

8-16-10
PLANS APPROVAL DATE

The State of California or its officers or agents shall not be responsible for the accuracy or completeness of electronic copies of this plan sheet.

This LOTB sheet was prepared in accordance with the Caltrans Soil & Rock Logging, Classification, & Presentation Manual (June 2007). Borings B1-99, B2-99, B1-06, B2-06 & B3-06 were completed prior to the 2007 manual.

FOR PLAN VIEW, SEE
"LOG OF TEST BORINGS" 1 OF 25

On Sta 103+58.0
"ALN" Line

B-2-99

434.3′

3.7 ASPHALT CONCRETE (10").
CLAYEY SAND with GRAVEL (SC); dense; olive gray; moist; (FILL).

-ASPHALT CONCRETE fragments.
Well-graded GRAVEL with CLAY and SAND (GW-GC); dense; olive gray; moist; (FILL).

Poorly graded GRAVEL with CLAY and SAND (GP-GC); dense; olive gray; moist.
CLAYEY SAND with GRAVEL (SC); medium dense; light olive gray; moist.
SANDY fat CLAY with GRAVEL (CH); dark gray; moist; high plasticity fines.

-hard.

-SANDY fat CLAY (CH).

SANDY fat CLAY with GRAVEL (CH); gray; moist; high plasticity fines.

2" METAMORPHIC ROCK (METAGRAYWACKE); fine to medium grained; dark gray; fresh; very hard; intensely fractured.
-(Well graded GRAVEL with SAND (GW); very dense; dark gray; medium SAND; coarse GRAVEL, subangular, well graded; nonplastic fines).
-(GRAVELLY lean CLAY with SAND (CL); very dense; dark gray; moist; fine SAND; coarse GRAVEL, subangular; medium plasticity fines).

-(SANDY fat CLAY with GRAVEL (CH); very stiff; high plasticity fines; (decomposed METAGRAYWACKE)).

46 1.4
40 1.4
28 1.4
26 1.4
11 1.4
6 1.4
31 1.4
23 1.4
30 1.4
REC=29% RQD=0%
102 1.4
REC=48% RQD=0%
57 1.4
REC=46% RQD=0%
60 1.4
REC=26% RQD=0%
50/5" 1.4
REC=48% RQD=0%
REC=68% RQD=0%

12-15-99
Terminated at Elev 332.3′
ERi = 68%

440 430 420 410 400 390 380 370 360 350 340 330

103+50 104+00 104+50

PROFILE
Horiz 1" = 1′
Vert 1" = 10′

ENGINEERING SERVICES	GEOTECHNICAL SERVICES	STATE OF CALIFORNIA DEPARTMENT OF TRANSPORTATION	DIVISION OF ENGINEERING SERVICES STRUCTURE DESIGN DESIGN BRANCH 6	BRIDGE NO. 44E0100 POST MILES 22.6/22.8	DANI CREEK LANDSLIDE LOG OF TEST BORINGS 11 OF 25
FUNCTIONAL SUPERVISOR NAME: M. Finegan	DRAWN BY: F. Nguyen 6/10 CHECKED BY: R. Turner	FIELD INVESTIGATION BY: M. Jurasius/ R. Turner/ W. Hoon/ B. Badeker	CU 05 EA 0T5601	DISREGARD PRINTS BEARING EARLIER REVISION DATES	REVISION DATES 07-30-10 08-04-10 SHEET 25 OF 39

OGS CIVIL LOG OF TEST BORINGS SHEET

ORIGINAL SCALE IN INCHES FOR REDUCED PLANS 0 1 2 3

FILE => ot5601-z-lotb11.dgn

USERNAME => trleonard DATE PLOTTED => 24-AUG-2010 TIME PLOTTED => 10:40

FOR PLAN VIEW, SEE
"LOG OF TEST BORINGS" 1 OF 25

17.6' Rt Sta 103+58.8 "ALN" Line

R-09-001

433.6'

4" ASPHALT CONCRETE.

SILTY GRAVEL with SAND (GM); loose; dark gray; moist; mostly fine from angular to subrounded GRAVEL; some from coarse to fine angular to subangular SAND; some fines; (FILL).

SANDY lean CLAY with GRAVEL (CL); black; moist; mostly highly plasticity fines; some medium and fine angular SAND; few from coarse to fine angular GRAVEL; trace ORGANICS; (COLLUVIUM).

METAMORPHIC ROCK (METAGRAYWACKE); fine-grained; dark bluish gray; slightly weathered to fresh; very hard; very intensely fractured; (CLAYEY GRAVEL with SAND (GC); very dark brown; moist; mostly from coarse to fine subangular to angular GRAVEL; some fines; some medium and fine angular SAND).

-slightly weathered to intensely weathered; extremely hard.

-decomposed; (CLAYEY SAND with GRAVEL (SC); some from fine to coarse subangular to angular GRAVEL; some fines; mostly from coarse to fine angular SAND).

-GRAPHITIC METASILTSTONE; very dark bluish gray; fresh; hard; intensely fractured.

-extremely hard.

-olive.

-color grades from very dark brown to light brown.

-yellowish brown, intensely weathered to decomposed; very hard.

-mottled yellowish red-yellowish brown.

-(CLAYEY SAND (SC); mottled light yellowish brown-yellowish brown; mostly medium and fine angular SAND; little fines).

-(CLAYEY SAND with GRAVEL (SC); mottled dark reddish brown-light yellowish brown).

-(SILTY SAND with GRAVEL (SM)).

-METAMORPHIC ROCK (GRAPHITIC METASILTSTONE); fine-grained; dark bluish gray; slightly weathered to decomposed; very intensely fractured, (CLAYEY GRAVEL with SAND (GC); very dark brown; moist; mostly from coarse to fine subrounded to subangular GRAVEL; some fines; some medium and coarse SAND].

3-04-09
Terminated at Elev 223.6'
ERi = 93%

Elev	Rec	RQD
433.6	5	1.4
433.6	5	1.4
433.6	16	1.4
433.6	REC=90%	RQD=0%
433.6	>50	1.4
433.6	REC=71%	RQD=21%
433.6	27	1.4
433.6	REC=85%	RQD=12%
433.6	27	1.4
433.6	REC=53%	RQD=27%
433.6	REC=88%	RQD=0%
433.6	24	1.4
433.6	25	1.4
433.6	REC=66%	RQD=0%
433.6	68	1.4
433.6	REC=60%	RQD=0%
433.6	32	1.4
433.6	REC=50%	RQD=14%
433.6	45	1.4
433.6	REC=70%	RQD=0%
433.6	41	1.4
433.6	REF	1.4
433.6	REC=82%	RQD=8%
433.6	REC=100%	RQD=0%
433.6	REC=83%	RQD=22%
433.6	REC=50%	RQD=0%
433.6	REC=53%	RQD=0%
433.6	REC=100%	RQD=0%
433.6	REC=100%	RQD=0%
433.6	REC=83%	RQD=0%
433.6	REC=95%	RQD=0%
433.6	REC=78%	RQD=0%
433.6	REC=100%	RQD=0%
433.6	REC=100%	RQD=0%
433.6	REC=82%	RQD=0%
433.6	REC=100%	RQD=0%
433.6	REC=65%	RQD=0%
433.6	REC=90%	RQD=9%
433.6	REC=95%	RQD=0%
433.6	REC=90%	RQD=0%
433.6	REC=90%	RQD=0%
433.6	REC=85%	RQD=0%
433.6	REC=86%	RQD=0%
433.6	REC=100%	RQD=0%
433.6	REC=23%	RQD=0%

430 420 410 400 390 380 370 360 350 340 330 320 310 300 290 280 270 260 250 240 230 220

103+00 105+00

PROFILE
Horiz 1" = 20'
Vert 1" = 10'

This LOTB sheet was prepared in accordance with the Caltrans Soil & Rock Logging, Classification, & Presentation Manual (June 2007). Borings B1-99, B2-99, B1-06, B2-06 & B3-06 were completed prior to the 2007 manual.

M. Jurasius
PROFESSIONAL GEOLOGIST 8-04-10

8-16-10
PLANS APPROVAL DATE

The State of California or its officers or agents shall not be responsible for the accuracy or completeness of electronic copies of this plan sheet.

PROFESSIONAL GEOLOGIST
M. J. Jurasius
No. 8618
Exp. 3-31-11
STATE OF CALIFORNIA

DIST	COUNTY	ROUTE	POST MILES TOTAL PROJECT	SHEET NO	TOTAL SHEETS
05	Mon	1	22.6/22.8	73	86

ENGINEERING SERVICES
GEOTECHNICAL SERVICES

FUNCTIONAL SUPERVISOR
NAME: M. Finegan

DRAWN BY: F. Nguyen 6/10
CHECKED BY: R. Turner

FIELD INVESTIGATION BY:
M. Jurasius/
R. Turner/ W. Hoon/ B. Badeker

ORIGINAL SCALE IN INCHES FOR REDUCED PLANS
0 1 2 3

STATE OF CALIFORNIA
DEPARTMENT OF TRANSPORTATION

DIVISION OF ENGINEERING SERVICES
STRUCTURE DESIGN
DESIGN BRANCH 6

BRIDGE NO. 44E0100
POST MILES 22.6/22.8

DANI CREEK LANDSLIDE

LOG OF TEST BORINGS 12 OF 25

DISREGARD PRINTS BEARING EARLIER REVISION DATES

REVISION DATES

SHEET 26 OF 39

CU 05
EA 0T5601

ODS CIVIL LOG OF TEST BORINGS SHEET

FILE => 0t5601-z-lotb12.dgn

USERNAME => trlenard DATE PLOTTED => 24-AUG-2010 TIME PLOTTED => 10:40

DIST	COUNTY	ROUTE	POST MILES TOTAL PROJECT	SHEET No	TOTAL SHEETS
05	Mon	1	22.6/22.8	74	86

PROFESSIONAL GEOLOGIST 8-04-10

8-16-10
PLANS APPROVAL DATE

PROFESSIONAL GEOLOGIST M. J. Jurasius No. 8618 Exp. 3-31-11 STATE OF CALIFORNIA

The State of California or its officers or agents shall not be responsible for the accuracy or completeness of electronic copies of this plan sheet.

This LOTB sheet was prepared in accordance with the Caltrans Soil & Rock Logging, Classification, & Presentation Manual (June 2007). Borings B1-99, B2-99, B1-06, B2-06 & B3-06 were completed prior to the 2007 manual.

FOR PLAN VIEW, SEE
"LOG OF TEST BORINGS" 1 OF 25

168.8' Rt Sta 103+71.7
"ALN" Line

R-10-012

514.28'

4" Poorly graded GRAVEL with SILT and SAND (GP-GM), loose; dark reddish brown; mostly fine angular GRAVEL; some medium to fine angular SAND; little fines; (COLLUVIUM).

-dark yellowish brown.

METAMORPHIC ROCK (GRAPHITIC METASILTSTONE); very dark bluish gray; from fresh to decomposed; varies between soft and hard; intensely fractured; (Well graded GRAVEL with SILT and SAND (GW-GM); moist; mostly from fine to coarse GRAVEL; some from coarse to fine angular SAND; little fines).

UC

-totally healed calcite veins.

METAMORPHIC ROCK (METAGRAYWACKE); foliated; dark bluish gray; fresh; hard; very intensely fractured.

REC=95% RQD=0%
REC=78% RQD=0%
REC=5% RQD=0%
REC=28% RQD=0%
REC=30% RQD=0%
REC=72% RQD=0%
REC=72% RQD=0%
REC=200% RQD=0%
REC=28% RQD=0%
REC=30% RQD=0%
REC=40% RQD=0%
REC=42% RQD=0%
REC=35% RQD=0%
REC=45% RQD=0%
REC=55% RQD=0%
REC=0% RQD=0%
REC=27% RQD=0%
REC=100% RQD=0%
REC=90% RQD=0%
REC=56% RQD=0%
REC=45% RQD=0%
REC=38% RQD=0%
REC=83% RQD=0%
REC=90% RQD=0%
REC=55% RQD=0%
REC=74% RQD=0%
REC=80% RQD=0%
REC=68% RQD=0%
REC=70% RQD=0%
REC=48% RQD=0%
REC=88% RQD=25%
REC=100% RQD=0%
REC=100% RQD=0%
REC=70% RQD=0%
REC=0% RQD=0%
REC=40% RQD=0%
REC=68% RQD=0%
REC=90% RQD=0%
REC=0% RQD=0%
REC=100% RQD=0%
REC=53% RQD=0%
REC=0% RQD=0%
REC=67% RQD=0%
REC=70% RQD=0%
REC=0% RQD=0%
REC=0% RQD=0%
REC=0% RQD=0%
REC=75% RQD=0%
REC=70% RQD=0%
REC=100% RQD=0%
REC=65% RQD=0%
REC=85% RQD=0%
REC=95% RQD=0%
REC=88% RQD=0%
REC=100% RQD=0%
REC=80% RQD=0%

4-10-10
Terminated at Elev 358.3'
ERi = 74%

510 500 490 480 470 460 450 440 430 420 410 400 390 380 370 360 350

103+00 105+00 107+00

PROFILE
Horiz 1" = 20'
Vert 1" = 10'

ENGINEERING SERVICES	GEOTECHNICAL SERVICES	STATE OF CALIFORNIA DEPARTMENT OF TRANSPORTATION	DIVISION OF ENGINEERING SERVICES STRUCTURE DESIGN DESIGN BRANCH 6	BRIDGE NO. 44E0100 POST MILES 22.6/22.8	DANI CREEK LANDSLIDE LOG OF TEST BORINGS 13 OF 25
FUNCTIONAL SUPERVISOR NAME: M. Finegan	DRAWN BY: F. Nguyen 6/10 CHECKED BY: R. Turner	FIELD INVESTIGATION BY: M. Jurasius/ R. Turner/ W. Hoon/ B. Badeker			

OGS CIVIL LOG OF TEST BORINGS SHEET

ORIGINAL SCALE IN INCHES FOR REDUCED PLANS 0 1 2 3

CU 05
EA 0T5601

DISREGARD PRINTS BEARING EARLIER REVISION DATES

REVISION DATES 08-06-10 08-04-10

SHEET 27 OF 39

FILE => ot5601-z-lotb13.dgn

USERNAME => rtrienard DATE PLOTTED => 24-AUG-2010 TIME PLOTTED => 10:40

FOR PLAN VIEW, SEE
"LOG OF TEST BORINGS" 1 OF 25

15.2' Lt Sta 103+97.0
"ALN" Line

B-3-06

432.0'

4"

430 — GRAVELLY lean CLAY with SAND, COBBLES and BOULDERS (CL); loose; greenish gray; moist; from fine to coarse subangular GRAVEL; BOULDERS up to ±3' diameter; (FILL).

420

21 1.4 -cold mix asphalt concrete.
CLAYEY SAND with GRAVEL (SC); medium dense; greenish gray; moist; subangular fine to coarse SAND; mostly fine GRAVEL; low plasticity fines; (FILL).

14 1.4 -cold mix asphalt concrete.

410

8 1.4 Fat CLAY (CH); black; moist; high plasticity; trace subangular fine GRAVEL; occasional lense of CLAYEY SAND; loose; black; moist; fine to medium SAND; low plasticity.

27 1.4 GRAYWACKE COBBLE, hard.

400

7 1.4

12 1.4 Fat CLAY (CH); stiff; dark gray; moist; high plasticity; trace subangular coarse SAND; trace fine GRAVEL.

390

9 1.4 CLAYEY SAND with GRAVEL (SC); medium dense; dark gray; moist; fine to medium SAND; angular fine to coarse GRAVEL to 1"; medium plasticity fines.

32 1.4 CLAYEY SAND with GRAVEL (SC); dense; gray; moist; angular fine to coarse SAND; fine to coarse GRAVEL; low plasticity fines; decomposed rock.

380

34 1.4 SANDY CLAY with GRAVEL (CL); hard; gray; moist; angular fine to coarse SAND; fine to coarse GRAVEL; medium plasticity fines; decomposed rock.

41 1.4 Poorly graded SAND with GRAVEL and CLAY (SP); very dense; light gray; moist; mostly fine SAND; fine to coarse GRAVE to 1 1/4 "; low plasticity fines.

370

28 1.4 SILTY SAND with GRAVEL (SM); medium dense; light gray; moist; angular fine to coarse SAND; fine to coarse GRAVEL; nonplastic; decomposed rock.

40 1.4 Well graded GRAVEL with SAND and SILT (GW); very dense; gray; moist; angular fine to coarse SAND; fine to coarse GRAVEL; nonplastic.

360

49 1.4 METAMORPHIC ROCK (GRAPHITIC METASILTSTONE); gray; slightly weathered to decomposed; very soft to extremely hard; intensely fractured;

74 1.4 -(SANDY CLAY with GRAVEL (CL); hard; dark gray; moist; angular fine to coarse SAND; fine GRAVEL; medium plasticity).

350

57 1.4 -(Well graded SAND with GRAVEL (SW); very dense; light brown; moist; subangular fine to coarse SAND; fine to coarse GRAVEL; low plasticity fines; CLAYEY in spots).

56 1.4

340

54 1.4 -(Poorly graded GRAVEL with SAND (GP); very dense; orange brown; moist; angular mostly fine CLAY; fine to coarse SAND; trace very low plasticity fines).

78 1.4

330

64 1.4 -(GRAVELLY SAND (SW); very dense; greenish gray; moist; angular fine to coarse SAND; fine GRAVEL nonplastic; trace fines).

30 1.4 -with few pieces of intact rock; 0.3' and angular; moderately weathered; very hard; intensely fractured.

320

39 1.4 -(CLAYEY SAND with GRAVEL (SC); medium dense; greenish gray; moist; subangular fine to coarse SAND; mostly fine GRAVEL; medium plasticity).

54 1.4 -(CLAYEY SAND with GRAVEL (SC); dense; gray; moist; subangular fine to coarse SAND; fine GRAVEL; medium plasticity).

310

>50 1.4 -(SANDY lean CLAY with GRAVEL (CL); hard; dark gray; moist; angular fine to coarse SAND; fine GRAVEL; medium plasticity).

-(lean CLAY with SAND and GRAVEL (CL); medium dense to hard; black; moist; fine SAND; angular fine GRAVEL).

41 1.4 -(CLAYEY SAND with GRAVEL (SC); very dense; light gray; moist; angular fine to coarse SAND; fine GRAVEL; low plasticity).

300

>50 1.4 -(SANDY lean CLAY with GRAVEL (CL); hard; black; moist; angular finee SAND; fine GRAVEL; medium plasticity fines.

63 1.4 METAMORPHIC ROCK (GRAPHITIC METASILTSTONE); black; fresh; very extremely hard; intensely fractured.

290

53 1.4

>50 1.4 -very hard.

280

-(well graded GRAVEL with SILT and SAND (GW-GM); very dense; light gray; moist; angular fine to coarse GRAVEL; fine to coarse SAND; nonplastic fines; GRAVEL to 2¼" diameter).

-(lean CLAY (CL); hard; dark gray; moist; medium plasticity; trace coarse angular SAND).

270

-(SANDY CLAY with GRAVEL (CL); hard; dark gray; moist; subangular fine to coarse SAND; fine GRAVEL; medium plasticity fines).

260 METAMORPHIC ROCK (GRAPHITIC METASILTSTONE); black; moderately weathered to decomposed; soft to hard; intensely to very intensely fractured.

250

240 5-04-06
Terminated at Elev 242.0'
ERi = 80%

103+80 104+80

PROFILE
Horiz 1" = 10'
Vert 1" = 10'

This LOTB sheet was prepared in accordance with the Caltrans Soil & Rock Logging, Classification, & Presentation Manual (June 2007). Borings B1-99, B2-99, B1-06, B2-06 & B3-06 were completed prior to the 2007 manual.

PROFESSIONAL GEOLOGIST 8-04-10

8-16-10
PLANS APPROVAL DATE

The State of California or its officers or agents shall not be responsible for the accuracy or completeness of electronic copies of this plan sheet.

PROFESSIONAL GEOLOGIST
M. J. Jurasius
No. 8618
Exp. 3-31-11
STATE OF CALIFORNIA

DIST	COUNTY	ROUTE	POST MILES TOTAL PROJECT	SHEET NO	TOTAL SHEETS
05	Mon	1	22.6/22.8	75	86

ENGINEERING SERVICES

FUNCTIONAL SUPERVISOR
NAME: M. Finegan

DRAWN BY: F. Nguyen 6/10
CHECKED BY: R. Turner

GEOTECHNICAL SERVICES

FIELD INVESTIGATION BY:
M. Jurasius/
R. Turner/ W. Hoon/ B. Badeker

ORIGINAL SCALE IN INCHES FOR REDUCED PLANS
0 1 2 3

STATE OF CALIFORNIA
DEPARTMENT OF TRANSPORTATION

DIVISION OF ENGINEERING SERVICES
STRUCTURE DESIGN
DESIGN BRANCH 6

BRIDGE NO. 44E0100
POST MILES 22.6/22.8

DANI CREEK LANDSLIDE

LOG OF TEST BORINGS 14 OF 25

DISREGARD PRINTS BEARING EARLIER REVISION DATES

REVISION DATES

SHEET 28 OF 39

CU 05
EA 0T5601

FILE => 0t5601-z-lotb14.dgn

ODS CIVIL LOG OF TEST BORINGS SHEET

USERNAME => trlenard DATE PLOTTED => 24-AUG-2010 TIME PLOTTED => 10:40

DIST	COUNTY	ROUTE	POST MILES TOTAL PROJECT	SHEET No	TOTAL SHEETS
05	Mon	1	22.6/22.8	76	86

PROFESSIONAL GEOLOGIST 8-04-10

8-16-10
PLANS APPROVAL DATE

PROFESSIONAL GEOLOGIST M. J. Jurasius No. 8618 Exp. 3-31-11 STATE OF CALIFORNIA

The State of California or its officers or agents shall not be responsible for the accuracy or completeness of electronic copies of this plan sheet.

This LOTB sheet was prepared in accordance with the Caltrans Soil & Rock Logging, Classification, & Presentation Manual (June 2007). Borings B1-99, B2-99, B1-06, B2-06 & B3-06 were completed prior to the 2007 manual.

FOR PLAN VIEW, SEE
"LOG OF TEST BORINGS" 1 OF 25

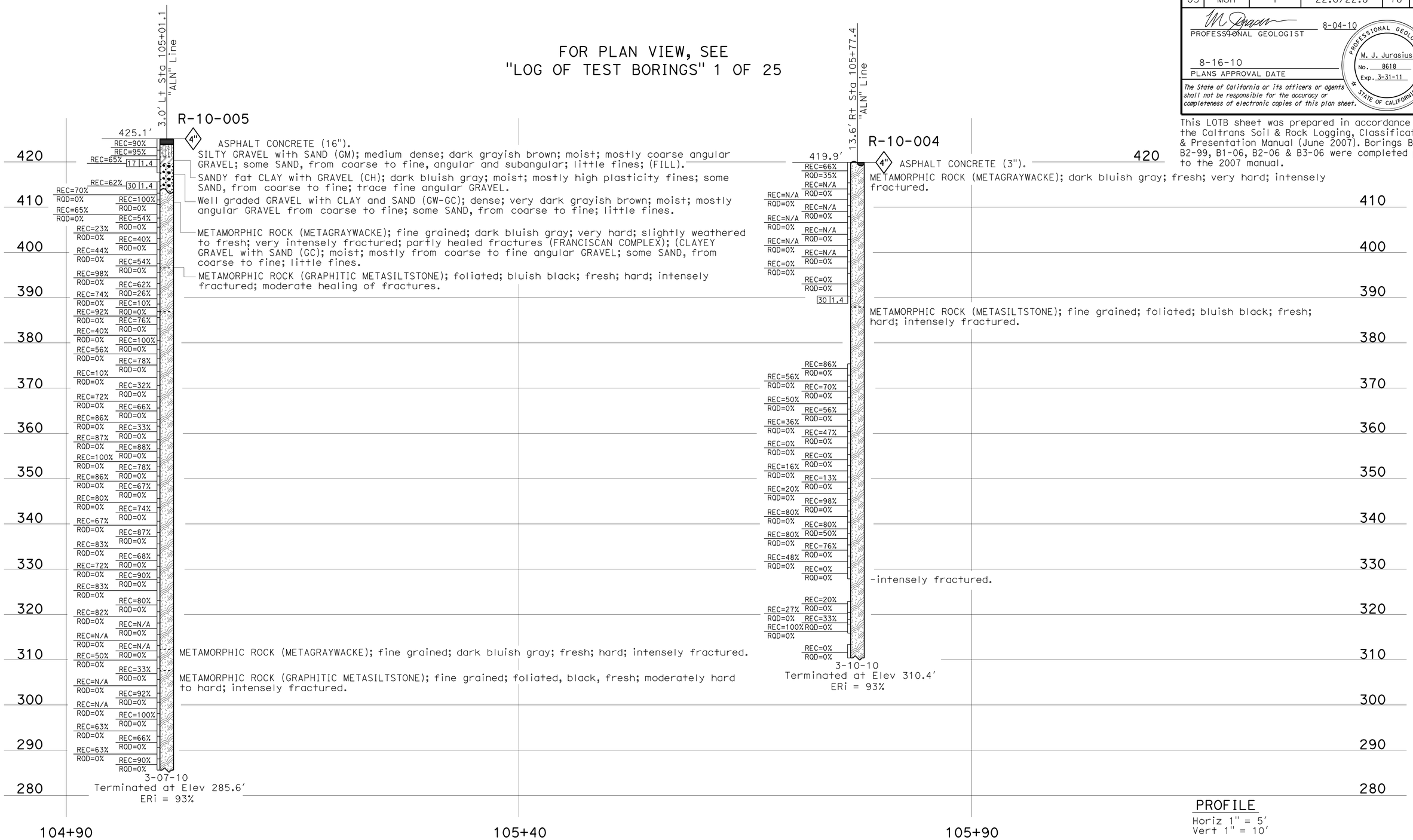

ENGINEERING SERVICES	GEOTECHNICAL SERVICES	STATE OF CALIFORNIA DEPARTMENT OF TRANSPORTATION	DIVISION OF ENGINEERING SERVICES STRUCTURE DESIGN DESIGN BRANCH 6	BRIDGE NO. 44E0100 POST MILES 22.6/22.8	DANI CREEK LANDSLIDE LOG OF TEST BORINGS 15 OF 25
FUNCTIONAL SUPERVISOR NAME: M. Finegan	DRAWN BY: F. Nguyen 6/10 CHECKED BY: R. Turner	FIELD INVESTIGATION BY: M. Jurasius/ R. Turner/ W. Hoon/ B. Badeker	CU 05 EA 0T5601	DISREGARD PRINTS BEARING EARLIER REVISION DATES →	REVISION DATES SHEET 29 OF 39

OGS CIVIL LOG OF TEST BORINGS SHEET

ORIGINAL SCALE IN INCHES FOR REDUCED PLANS 0 1 2 3

FILE => ot5601-z-lotb15.dgn

USERNAME => trlenard DATE PLOTTED => 24-AUG-2010 TIME PLOTTED => 10:40

DIST	COUNTY	ROUTE	POST MILES TOTAL PROJECT	SHEET No	TOTAL SHEETS
05	Mon	1	22.6/22.8	77	86

PROFESSIONAL GEOLOGIST 8-04-10

PROFESSIONAL GEOLOGIST M. J. Jurasius No. 8618 Exp. 3-31-11 STATE OF CALIFORNIA

8-16-10
PLANS APPROVAL DATE

The State of California or its officers or agents shall not be responsible for the accuracy or completeness of electronic copies of this plan sheet.

This LOTB sheet was prepared in accordance with the Caltrans Soil & Rock Logging, Classification, & Presentation Manual (June 2007). Borings B1-99, B2-99, B1-06, B2-06 & B3-06 were completed prior to the 2007 manual.

FOR PLAN VIEW, SEE
"LOG OF TEST BORINGS" 1 OF 25

14.6' Lt Sta 106+15.5
"ALN" Line

B-2-06

418.5'

4"

GRAVELLY lean CLAY with SAND, COBBLES and BOULDERS (CL); very stiffe; gray; moist; subangular, fine to coarse GRAVEL; BOULDERS to 3.3'; medium plasticity fines; pp= 3.5 tsf; (FILL).

-well graded SAND with GRAVEL (SW); medium dense; black; mostly SAND, from coarse to fine; little angular fine GRAVEL; layers of cold mix asphalt concrete.

-GRAVELS and COBBLES.

SANDY fat CLAY (CH); gray; from fine to coarse SAND; trace fine, angular GRAVEL; nonplastic.

CLAYEY SAND with GRAVEL (SC); medium dense; gray; some angular SAND from coarse to fine; mostly fine GRAVEL; low plasticity.

Well-graded GRAVEL with SAND and CLAY (GW-GC); medium dense; gray; moist; angular GRAVEL from coarse to fine; fine to coarse SAND; low plasticity fines.

SANDY lean CLAY (CL); gray; moist; angular fine to coarse SAND; trace angular fine GRAVEL; medium plasticity fines.

Well-graded GRAVEL with SAND and CLAY (GW-GC); medium dense; gray; moist; angular fine to coarse GRAVEL; fine to coarse SAND.

CLAYEY SAND (SC); dense; gray; moist; angular SAND, from coarse to fine; trace angular GRAVEL, from coarse to fine; low plasticity fines.

Well-graded GRAVEL with SAND (GW); dense; gray; moist; angular fine to coarse SAND; GRAVEL up to 1½"; trace fines; nonplastic.

Well-graded SAND with CLAY and GRAVEL (SW); -dense; dark gray; moist; angular SAND from coarse to fine; fine GRAVEL; low plasticity fines.

CLAYEY SAND with GRAVEL (SC); medium dense; gray; moist; subangular fine to coarse SAND; fine GRAVEL; low plasticity fines.

SANDY lean CLAY (CL); -gray; moist; mediume SAND; medium plasticity fines.

Fat CLAY with SAND and GRAVEL (CH); -gray; moist; angular SAND from coarse to fine; fine GRAVEL; high plasticity fines.

CLAYEY SAND with GRAVEL (SC); very dense; gray; moist; subangular SAND from coarse to fine; medium plasticity fines; trace fine GRAVEL.

-dense.

- very dense.

Poorly graded GRAVEL with SAND (GP); very dense; gray; moist; mostly angular fine GRAVEL; SAND, from coarse to fine; trace fines.

-dense.

Well-graded SAND with GRAVEL (SW); dense; gray; moist; subangular SAND, from coarse to fine; fine GRAVEL; nonplastic fines.

SANDY lean CLAY (CL); gray; moist; subangular SAND from medium to fine; nonplastic.

Well-graded SAND with GRAVEL (SW); very dense; gray; moist; subangular fine to coarse SAND; fine GRAVEL; trace nonplastic fines.

Poorly-graded GRAVEL with CLAY and SAND (GP-GC); very dense; gray; moist; angular SAND from coarse to fine; mostly fine GRAVEL; low plasticity fines.

CLAYEY SAND with GRAVEL (SC); very dense; gray; moist; angular SAND from coarse to fine; fine GRAVEL; medium plasticity fines.

Poorly graded GRAVEL with SAND (GP); very dense; gray; moist; mostly angular fine GRAVEL; fine to coarse SAND; trace fines.

Lean CLAY with SAND (CL); gray; moist; subangular fine to coarse SAND; medium plasticity.

Elev	Blows / Hammer
418.5'	4"
416.5'	9 | 1.4
414.5'	16 | 1.4
412.5'	30 | 1.4
410.5'	8 | 1.4
408.5'	13 | 1.4
406.5'	24 | 1.4
404.5'	16 | 1.4
402.5'	23 | 1.4
400.5'	15 | 1.4
398.5'	54 | 1.4
396.5'	50/0.8" | 1.4
394.5'	30 | 1.4
392.5'	26 | 1.4
390.5'	26 | 1.4
388.5'	44 | 1.4
386.5'	29 | 1.4
384.5'	43 | 1.4
382.5'	50/0.8" | 1.4
380.5'	32 | 1.4
378.5'	52 | 1.4
376.5'	50/12" | 1.4
374.5'	50/12" | 1.4
372.5'	50/12" | 1.4
370.5'	45 | 1.4
368.5'	71 | 1.4
366.5'	64 | 1.4
364.5'	46 | 1.4
362.5'	61 | 1.4

4-27-06
Terminated at Elev 267.0'
ERi = 80%

420 410 400 390 380 370 360 350 340 330 320 310 300 290 280 270

106+00 107+00 108+00

PROFILE
Horiz 1" = 10'
Vert 1" = 10'

ENGINEERING SERVICES		GEOTECHNICAL SERVICES	STATE OF CALIFORNIA DEPARTMENT OF TRANSPORTATION	DIVISION OF ENGINEERING SERVICES STRUCTURE DESIGN DESIGN BRANCH 6	BRIDGE NO. 44E0100 POST MILES 22.6/22.8	DANI CREEK LANDSLIDE LOG OF TEST BORINGS 16 OF 25
FUNCTIONAL SUPERVISOR NAME: M. Finegan	DRAWN BY: F. Nguyen 6/10 CHECKED BY: R. Turner	FIELD INVESTIGATION BY: M. Jurasius/ R. Turner/ W. Hoon/ B. Badeker		CU 05 EA 0T5601	DISREGARD PRINTS BEARING EARLIER REVISION DATES	REVISION DATES 08-06-10 08-04-10 SHEET 30 OF 39

OGS CIVIL LOG OF TEST BORINGS SHEET

ORIGINAL SCALE IN INCHES FOR REDUCED PLANS 0 1 2 3

FILE => ot5601-z-lotb16.dgn

USERNAME => trlenard DATE PLOTTED => 24-AUG-2010 TIME PLOTTED => 10:40

FOR PLAN VIEW, SEE
"LOG OF TEST BORINGS" 1 OF 25

DIST	COUNTY	ROUTE	POST MILES TOTAL PROJECT	SHEET No	TOTAL SHEETS
05	Mon	1	22.6/22.8	78	86

PROFESSIONAL GEOLOGIST 8-04-10

8-16-10
PLANS APPROVAL DATE

PROFESSIONAL GEOLOGIST M. J. Jurasius No. 8618 Exp. 3-31-11 STATE OF CALIFORNIA

The State of California or its officers or agents shall not be responsible for the accuracy or completeness of electronic copies of this plan sheet.

This LOTB sheet was prepared in accordance with the Caltrans Soil & Rock Logging, Classification, & Presentation Manual (June 2007). Borings B1-99, B2-99, B1-06, B2-06 & B3-06 were completed prior to the 2007 manual.

PROFILE
Horiz 1" = 10'
Vert 1" = 10'

ENGINEERING SERVICES		GEOTECHNICAL SERVICES	STATE OF CALIFORNIA DEPARTMENT OF TRANSPORTATION	DIVISION OF ENGINEERING SERVICES STRUCTURE DESIGN DESIGN BRANCH 6	BRIDGE NO. 44E0100 POST MILES 22.6/22.8	DANI CREEK LANDSLIDE LOG OF TEST BORINGS 17 OF 25
FUNCTIONAL SUPERVISOR NAME: M. Finegan	DRAWN BY: F. Nguyen 6/10 CHECKED BY: R. Turner	FIELD INVESTIGATION BY: M. Jurasius/ R. Turner/ W. Hoon/ B. Badeker		CU 05 EA 0T5601	DISREGARD PRINTS BEARING EARLIER REVISION DATES	REVISION DATES 08-05-10 08-04-10 SHEET 31 OF 39

OGS CIVIL LOG OF TEST BORINGS SHEET

ORIGINAL SCALE IN INCHES FOR REDUCED PLANS 0 1 2 3

FILE => ot5601-z-lotb17.dgn

USERNAME => trlenard DATE PLOTTED => 24-AUG-2010 TIME PLOTTED => 10:40

DIST	COUNTY	ROUTE	POST MILES TOTAL PROJECT	SHEET No	TOTAL SHEETS
05	Mon	1	22.6/22.8	79	86

PROFESSIONAL GEOLOGIST 8-04-10

8-16-10
PLANS APPROVAL DATE

PROFESSIONAL GEOLOGIST M. J. Jurasius No. 8618 Exp. 3-31-11 STATE OF CALIFORNIA

The State of California or its officers or agents shall not be responsible for the accuracy or completeness of electronic copies of this plan sheet.

This LOTB sheet was prepared in accordance with the Caltrans Soil & Rock Logging, Classification, & Presentation Manual (June 2007). Borings B1-99, B2-99, B1-06, B2-06 & B3-06 were completed prior to the 2007 manual.

FOR PLAN VIEW, SEE
"LOG OF TEST BORINGS" 1 OF 25

420
410
400
390
380
370
360
350
340
330
320
310
300
290
280
270
260

ASPHALT CONCRETE (3").
SILTY GRAVEL with SAND (GM); dark gray; moist; mostly from fine to coarse angular to subangular GRAVEL, some angular SAND, from coarse to fine; little fines; (FILL).

CLAYEY GRAVEL with SAND (GC); medium dense; dark gray; moist; mostly GRAVEL, from coarse to fine, angular and subangular; some fine SAND; little fines.
ASPHALT CONCRETE; interlayered with CLAYEY GRAVEL with SAND (GC).
Well-graded GRAVEL with SILT and SAND (GW-GM); medium dense; dark yellowish brown and grayish brown; moist; mostly GRAVEL, from coarse to fine, angular and subangular; some SAND, from coarse to fine; few fines.

METAMORPHIC ROCK (METAGRAYWACKE); medium and fine grained; from grayish brown to dark bluish gray; from intensely weathered to fresh; very hard; very intensely fractured; (CLAYEY GRAVEL with SAND (GC); grayish brown; moist; mostly coarse angular GRAVEL; some SAND from coarse to fine; little fines.

-(CLAYEY SAND with GRAVEL (SC); bluish black; moist; mostly angular SAND, from coarse to fine; little coarse angular GRAVEL; some fines).

METAMORPHIC ROCK (GRAPHITIC METASILTSTONE); foliated; very dark bluish gray; fresh; from soft to hard; very intensely fractured.

-intensely fractured.

-(CLAYEY SAND with GRAVEL (SC)).

METAMORPHIC ROCK (METAGRAYWACKE); fine grained; bluish gray; fresh; very hard; intensely fractured; (F1, 45°, variable spacint, closed; 1/8-1/4" filling of calcite, hard, totally healed.

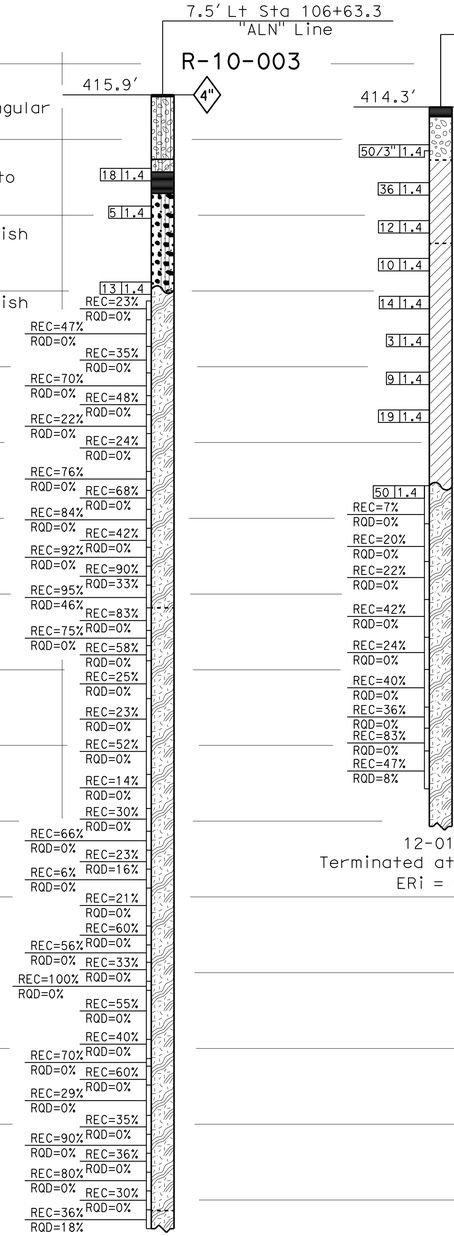

3-04-10
Terminated at Elev 266.2'
ERi = 93%

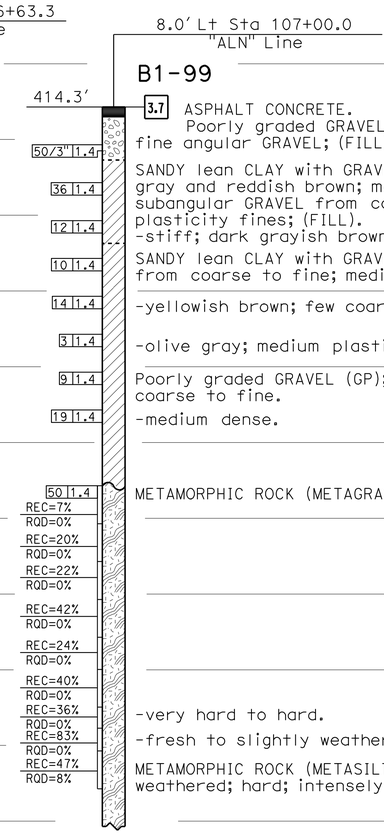

12-01-99
Terminated at Elev 319.3'
ERi = 65%

ASPHALT CONCRETE.
Poorly graded GRAVEL (GP); very dense; gray, fine angular GRAVEL; (FILL).

SANDY lean CLAY with GRAVEL (CL); dark greenish gray and reddish brown; moist; fine to coarse SAND; subangular GRAVEL from coarse to fine; low plasticity fines; (FILL).
-stiff; dark grayish brown.

SANDY lean CLAY with GRAVEL (CL); dark bluish gray; moist; fine subrounded GRAVEL from coarse to fine; medium plasticity fines.

-yellowish brown; few coarse GRAVEL, subrounded to subangular; low plasticity fines.

-olive gray; medium plasticity fines.

Poorly graded GRAVEL (GP); medium dense; black; GRAVEL, from coarse to fine; SAND from coarse to fine.
-medium dense.

METAMORPHIC ROCK (METAGRAYWACKE); grey; fresh; extremely hard; intensely fractured.

-very hard to hard.
-fresh to slightly weathered; very hard.

METAMORPHIC ROCK (METASILTSTONE); fine grained; foliated; dark gray; moderately weathered; hard; intensely fractured.

105+50 106+50 107+50

PROFILE
Horiz 1" = 10'
Vert 1" = 10'

ENGINEERING SERVICES	GEOTECHNICAL SERVICES	STATE OF CALIFORNIA DEPARTMENT OF TRANSPORTATION	DIVISION OF ENGINEERING SERVICES STRUCTURE DESIGN DESIGN BRANCH 6	BRIDGE NO. 44E0100 POST MILES 22.6/22.8	DANI CREEK LANDSLIDE LOG OF TEST BORINGS 18 OF 25
FUNCTIONAL SUPERVISOR NAME: M. Finegan	DRAWN BY: F. Nguyen 6/10 CHECKED BY: R. Turner	FIELD INVESTIGATION BY: M. Jurasius/ R. Turner/ W. Hoon/ B. Badeker			

OGS CIVIL LOG OF TEST BORINGS SHEET

ORIGINAL SCALE IN INCHES FOR REDUCED PLANS 0 1 2 3

CU 05
EA 0T5601

DISREGARD PRINTS BEARING EARLIER REVISION DATES 08-05-10 08-04-10

REVISION DATES

SHEET 32 OF 39

FILE => ot5601-z-lotb18.dgn

USERNAME => friehard DATE PLOTTED => 24-AUG-2010 TIME PLOTTED => 10:41

DIST	COUNTY	ROUTE	POST MILES TOTAL PROJECT	SHEET No	TOTAL SHEETS
05	Mon	1	22.6/22.8	80	86

PROFESSIONAL GEOLOGIST 8-04-10

8-16-10
PLANS APPROVAL DATE

PROFESSIONAL GEOLOGIST M. J. Jurasius No. 8618 Exp. 3-31-11 STATE OF CALIFORNIA

The State of California or its officers or agents shall not be responsible for the accuracy or completeness of electronic copies of this plan sheet.

This LOTB sheet was prepared in accordance with the Caltrans Soil & Rock Logging, Classification, & Presentation Manual (June 2007). Borings B1-99, B2-99, B1-06, B2-06 & B3-06 were completed prior to the 2007 manual.

FOR PLAN VIEW, SEE
"LOG OF TEST BORINGS" 1 OF 25

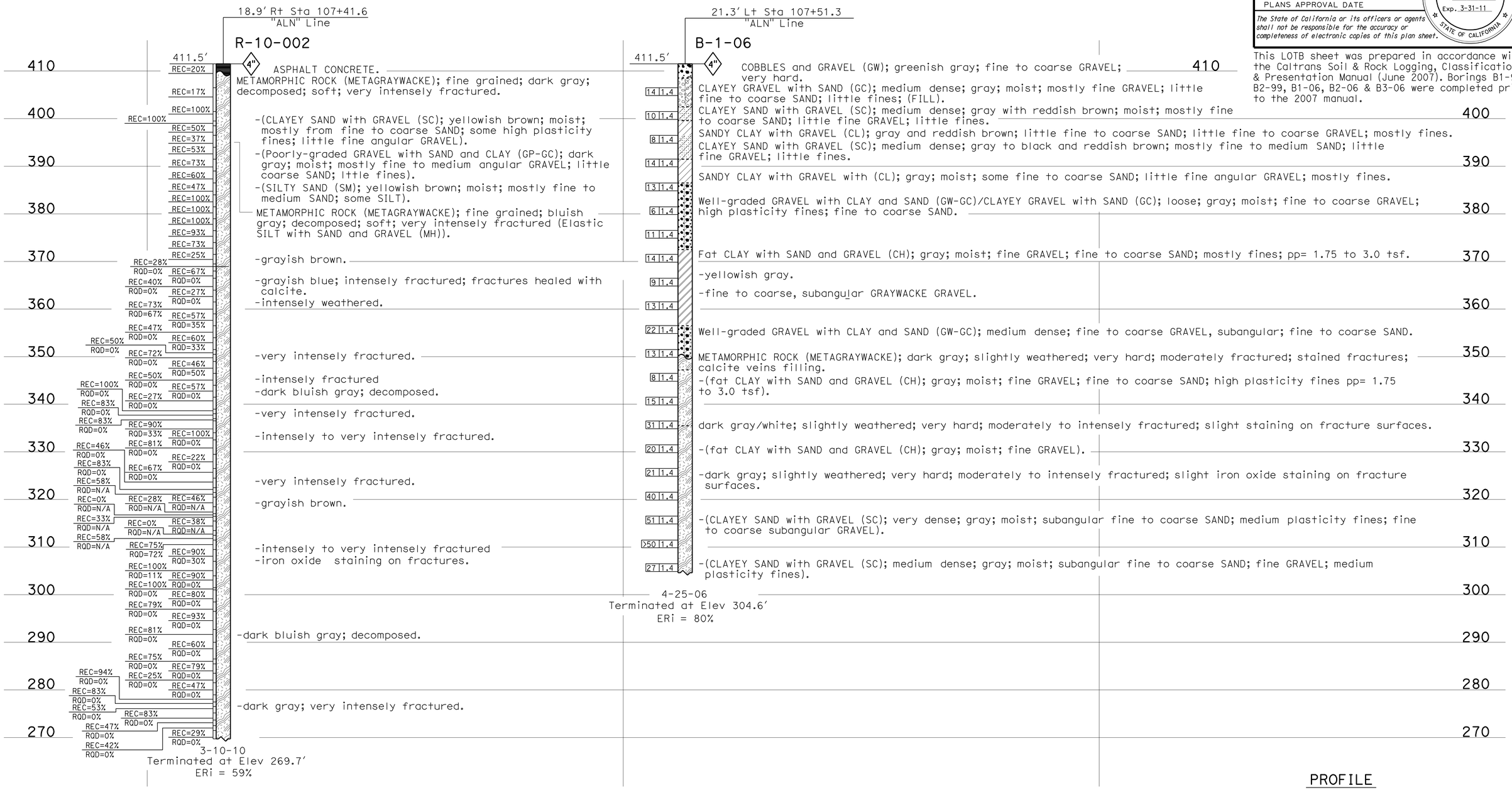

PROFILE
Horiz 1" = 1'
Vert 1" = 10'

ENGINEERING SERVICES	GEOTECHNICAL SERVICES	STATE OF CALIFORNIA DEPARTMENT OF TRANSPORTATION	DIVISION OF ENGINEERING SERVICES STRUCTURE DESIGN DESIGN BRANCH 6	BRIDGE NO. 44E0100 POST MILES 22.6/22.8	DANI CREEK LANDSLIDE
FUNCTIONAL SUPERVISOR NAME: M. Finegan	DRAWN BY: F. Nguyen 6/10 CHECKED BY: R. Turner	FIELD INVESTIGATION BY: M. Jurasius/ R. Turner/ W. Hoon/ B. Badeker			LOG OF TEST BORINGS 19 OF 25

OGS CIVIL LOG OF TEST BORINGS SHEET

ORIGINAL SCALE IN INCHES FOR REDUCED PLANS 0 1 2 3

CU 05
EA 0T5601

DISREGARD PRINTS BEARING EARLIER REVISION DATES 08-05-10 08-04-10

REVISION DATES | SHEET 33 | OF 39

FILE => ot5601-z-lotb19.dgn

USERNAME => rtrenard DATE PLOTTED => 24-AUG-2010 TIME PLOTTED => 10:41

FOR PLAN VIEW, SEE
"LOG OF TEST BORINGS" 1 OF 25

72.0' Lt Sta 107+56.9
"ALN" Line

R-10-014

382.6'

4"

SILTY GRAVEL with SAND, COBBLES and BOULDERS (GM); mottled brown and gray; mostly GRAVEL from coarse to fine; little from fine to coarse SAND; little fines; 8% COBBLES; 3% BOULDERS; (FILL).

-orange brown.

METAMORPHIC ROCK (METAGRAYWACKE and METASILTSTONE); gray to black; from fresh to intensely weathered; hard; very intensely fractured; (Well graded GRAVEL with SILT and SAND (GW-GM); mostly fine GRAVEL; little SAND from coarse to fine; few fines).

-very intensely fractured.
-slightly to moderately fractured.
-intensely to very intensely fractured.
-moderately to intensely fractured.
-very intensely fractured.
-brown; fresh to slightly weathered.
-black and gray.
-from moderately to very intensely fractured.
-mottled dark brown and gray.
-moderately weathered to intensely weathered.

Elev	REC	RQD
380	20%	0%
	40%	0%
370	40%	0%
	13%	0%
	0%	0%
360	0%	0%
	7%	0%
	13%	0%
	17%	0%
350	0%	0%
	4%	0%
	43%	0%
	3%	0%
	40%	0%
	10%	0%
340	0%	0%
	39%	0%
	37%	0%
	17%	0%
	17%	0%
330	33%	0%
	20%	0%
	20%	0%
	33%	0%
320	20%	0%
	12%	0%
	67%	0%
	16%	0%
	10%	0%
310	67%	0%
	0%	0%
	20%	0%
	10%	0%
	50%	0%
	40%	0%
300	22%	0%
	0%	0%
	20%	0%
	50%	0%
290	0%	0%
	50%	0%
	40%	0%
	0%	0%
	27%	0%
	21%	0%
280	27%	0%
	16%	0%
	0%	0%
	50%	0%
	27%	0%
270	17%	0%
	53%	0%
	30%	0%
	33%	0%
	13%	0%
260	14%	0%
	24%	0%
	0%	0%
	67%	0%
	29%	0%
250	0%	0%
	29%	0%
	0%	0%
	100%	0%
240	60%	0%
	100%	0%
	20%	0%
	95%	0%
230	35%	0%
	68%	0%
	13%	0%
	8%	0%
220	0%	0%
	10%	0%
	0%	0%
	77%	0%
210	0%	0%
	95%	0%
	0%	0%
	35%	0%
200	0%	0%
	80%	0%
	0%	0%
	62%	0%
190	0%	0%
	37%	0%
	0%	0%
	7%	0%
180	0%	0%

4-16-10
Terminated at Elev 182.6'

PROFILE
Horiz 1" = 20'
Vert 1" = 10'

107+00

109+00

This LOTB sheet was prepared in accordance with the Caltrans Soil & Rock Logging, Classification, & Presentation Manual (June 2007). Borings B1-99, B2-99, B1-06, B2-06 & B3-06 were completed prior to the 2007 manual.

PROFESSIONAL GEOLOGIST 8-04-10

8-16-10
PLANS APPROVAL DATE

The State of California or its officers or agents shall not be responsible for the accuracy or completeness of electronic copies of this plan sheet.

PROFESSIONAL GEOLOGIST
M. J. Jurasius
No. 8618
Exp. 3-31-11
STATE OF CALIFORNIA

DIST	COUNTY	ROUTE	POST MILES TOTAL PROJECT	SHEET NO	TOTAL SHEETS
05	Mon	1	22.6/22.8	81	86

ENGINEERING SERVICES

GEOTECHNICAL SERVICES

FUNCTIONAL SUPERVISOR
NAME: M. Finegan

DRAWN BY: F. Nguyen 6/10
CHECKED BY: R. Turner.

FIELD INVESTIGATION BY:
M. Jurasius/
R. Turner/ W. Hoon/ B. Badeker

ORIGINAL SCALE IN INCHES FOR REDUCED PLANS 0 1 2 3

STATE OF CALIFORNIA
DEPARTMENT OF TRANSPORTATION

DIVISION OF ENGINEERING SERVICES
STRUCTURE DESIGN
DESIGN BRANCH 6

BRIDGE NO. 44E0100
POST MILES 22.6/22.8

DISREGARD PRINTS BEARING EARLIER REVISION DATES

DANI CREEK LANDSLIDE

LOG OF TEST BORINGS 20 OF 25

REVISION DATES

SHEET 34 OF 39

CU 05
EA 0T5601

ODS CIVIL LOG OF TEST BORINGS SHEET

FILE => 0t5601-z-lotb20.dgn

USERNAME => trlenard DATE PLOTTED => 24-AUG-2010 TIME PLOTTED => 10:41

FOR PLAN VIEW, SEE
"LOG OF TEST BORINGS" 1 OF 25

9.4' Rt Sta 107+95.6
"ALN" Line

R-09-002

409.0'

4"

ASPHALT CONCRETE (6").

CLAYEY SAND with GRAVEL (SC); very dense; dark greenish gray; moist; mostly from fine to coarse SAND; some angular GRAVEL, from coarse to fine; little fines; (FILL).

44 1.4

-medium dense; dark yellowish brown.

9 1.4

Poorly-graded GRAVEL with SAND (GP); loose; dark yellowish brown; moist; mostly angular GRAVEL, from fine to coarse; some from fine to coarse SAND; little fines.

6 1.4

CLAYEY SAND with GRAVEL (SC); medium dense; dark yellowish brown; moist; mostly from fine to coarse SAND; some angular fine GRAVEL; little fines.

9 1.4

SANDY fat CLAY (CH); dark yellowish brown; moist; mostly fines; some from fine to coarse SAND.

6 1.4

-COBBLES; METAGRAYWACKE; dark gray; hard; calcite veins.

10 1.4 REC=10% RQD=0%

METAMORPHIC ROCK (METAGRAYWACKE); gray; fresh; very hard; varies from very intensely to moderately fractured;(SANDY fat CLAY with GRAVEL (CH); stiff; dark gray; moist; mostly fines; some SAND, from fine to coarse; few fine angular GRAVELS).

16 1.4 REC=19% RQD=0%

-(alternating with CLAYEY SAND with GRAVEL (SC); medium dense; dark gray; moist; mostly SAND, from fine to coarse; few fine angular GRAVELS; few fines).

17 1.4

-coarse GRAVELS.

24 1.4

24 1.4

17 1.4

-(SANDY fat CLAY with GRAVEL (CH); dark gray; moist; mostly fines; some SAND, from fine to coarse; little from fine to coarse subangular to subrounded GRAVELS).

45 1.4

-(CLAYEY SAND with GRAVEL (SC); dense; green and gray; moist; mostly from fine to coarse SAND; some fines; few fine and coarse GRAVELS; lenses of SANDY SILT).

26 1.4

29 1.4 REC=7% RQD=0%

58 1.4 REC=36% RQD=9%

-(alternating with CLAYEY SAND (SC)).

-METAGRAYWACKE COBBLES in CLAYEY SAND with GRAVEL (SC) matrix.

REC=81% RQD=50%

REC=18% RQD=0%

-(SANDY lean CLAY with GRAVEL (CL); very stiff; brownish gray; moist; mostly fines; some GRAVELS, from fine to coarse; little SAND, from fine to coarse; pp=3.0 tsf).

REC=20% RQD=0%

REC=30% RQD=0%

REC=8% RQD=0%

-(SANDY fat CLAY with GRAVEL (CH); gray; moist; mostly fines; some SAND, from fine to coarse; little GRAVEL, from coarse to fine)

REC=60% RQD=0%

-few GRAVEL.

REC=17% RQD=0%

REC=100% RQD=42%

REC=10% RQD=0%

-(METAGRAYWACKE COBBLES 4-6"; very hard).

REC=10% RQD=0%

REC=20% RQD=0%

3-04-09
Terminated at Elev 233.0'
ERi = 74%

PROFILE
Horiz 1" = 50'
Vert 1" = 10'

410 400 390 380 370 360 350 340 330 320 310 300 290 280 270 260 250 240 230

107+00 112+00

This LOTB sheet was prepared in accordance with the Caltrans Soil & Rock Logging, Classification, & Presentation Manual (June 2007). Borings B1-99, B2-99, B1-06, B2-06 & B3-06 were completed prior to the 2007 manual.

PROFESSIONAL GEOLOGIST 8-04-10

8-16-10
PLANS APPROVAL DATE

The State of California or its officers or agents shall not be responsible for the accuracy or completeness of electronic copies of this plan sheet.

PROFESSIONAL GEOLOGIST
M. J. Jurasius
No. 8618
Exp. 3-31-11
STATE OF CALIFORNIA

DIST	COUNTY	ROUTE	POST MILES TOTAL PROJECT	SHEET NO	TOTAL SHEETS
05	Mon	1	22.6/22.8	82	86

ENGINEERING SERVICES

FUNCTIONAL SUPERVISOR
NAME: M. Finegan

DRAWN BY: F. Nguyen 6/10
CHECKED BY: R. Turner.

GEOTECHNICAL SERVICES

FIELD INVESTIGATION BY:
M. Jurasius/
R. Turner/ W. Hoon/ B. Badeker

ORIGINAL SCALE IN INCHES FOR REDUCED PLANS
0 1 2 3

STATE OF CALIFORNIA
DEPARTMENT OF TRANSPORTATION

DIVISION OF ENGINEERING SERVICES
STRUCTURE DESIGN
DESIGN BRANCH 6

BRIDGE NO. 44E0100
POST MILES 22.6/22.8

DANI CREEK LANDSLIDE

LOG OF TEST BORINGS 21 OF 25

SHEET 35 OF 39

CU 05
EA 0T5601

DISREGARD PRINTS BEARING EARLIER REVISION DATES

REVISION DATES

08-04-10

ODS CIVIL LOG OF TEST BORINGS SHEET

FILE => 0t5601-z-lotb21.dgn

USERNAME => trlenard DATE PLOTTED => 24-AUG-2010 TIME PLOTTED => 10:41

DIST	COUNTY	ROUTE	POST MILES TOTAL PROJECT	SHEET No	TOTAL SHEETS
05	Mon	1	22.6/22.8	83	86

PROFESSIONAL GEOLOGIST 8-04-10

8-16-10
PLANS APPROVAL DATE

PROFESSIONAL GEOLOGIST M. J. Jurasius No. 8618 Exp. 3-31-11 STATE OF CALIFORNIA

The State of California or its officers or agents shall not be responsible for the accuracy or completeness of electronic copies of this plan sheet.

This LOTB sheet was prepared in accordance with the Caltrans Soil & Rock Logging, Classification, & Presentation Manual (June 2007). Borings B1-99, B2-99, B1-06, B2-06 & B3-06 were completed prior to the 2007 manual.

FOR PLAN VIEW, SEE
"LOG OF TEST BORINGS" 1 OF 25

12.5' Lt Sta 108+12.8
"ALN" Line

R-10-001

408.5'

4"

ASPHALT CONCRETE alternating with angular ¾" base, 4" to 6" lifts.

Well graded GRAVEL with CLAY and SAND and COBBLES (GW-GC); grayish brown; moist; mostly from fine to coarse angular GRAVEL; little from fine to coarse SAND; little fines; 30% METAGRAYWACKE COBBLES, 4", angular.

CLAYEY SAND with GRAVEL (SC); yellowish brown; moist; mostly from fine to coarse angular SAND; little fines; some fine angular GRAVEL.

-pale yellowish brown.

METAMORPHIC ROCK (METAGRAYWACKE); fine grained; dark gray; intensely to moderately weathered; hard; very intensely fractured to intensely fractured.

-decomposed.
-gray.

-dark gray.

-intensely fractured.

-(SANDY ELASTIC SILT with GRAVEL (MH); yellowish brown; moist; mostly medium plasticity fines; some from fine to coarse SAND; some fine angular GRAVEL).

-intensely fractured.

REC=25% RQD=0%
REC=27% RQD=0%
REC=13% RQD=0%
REC=50% RQD=0%
REC=25% RQD=0%
REC=0% RQD=0%
REC=25% RQD=0%
REC=100% RQD=N/A
REC=0% RQD=N/A
REC=50% RQD=N/A
REC=58% RQD=N/A
REC=50% RQD=N/A
REC=0% RQD=N/A
REC=67% RQD=N/A
REC=100% RQD=N/A
REC=100% RQD=N/A
REC=27% RQD=N/A
REC=27% RQD=N/A
REC=60% RQD=0%
REC=27% RQD=0%
REC=47% RQD=0%
REC=47% RQD=0%
REC=20% RQD=0%
REC=40% RQD=0%
REC=50% RQD=0%
REC=47% RQD=0%
REC=50% RQD=0%
REC=56% RQD=0%
REC=29% RQD=0%
REC=33% RQD=0%
REC=43% RQD=0%
REC=46% RQD=0%
REC=56% RQD=0%
REC=60% RQD=0%
REC=33% RQD=0%
REC=53% RQD=0%
REC=27% RQD=0%
REC=30% RQD=0%
REC=33% RQD=0%
REC=50% RQD=0%
REC=100% RQD=0%
REC=92% RQD=0%
REC=33% RQD=0%
REC=92% RQD=0%
REC=50% RQD=0%
REC=50% RQD=0%
REC=92% RQD=0%
REC=42% RQD=0%
REC=71% RQD=0%
REC=56% RQD=0%
REC=0% RQD=0%
REC=67% RQD=0%
REC=67% RQD=0%
REC=100% RQD=22%
REC=58% RQD=0%
REC=50% RQD=0%
REC=56% RQD=0%

3-06-10
Terminated at Elev 288.5'
ERi = 59%

410 400 390 380 370 360 350 340 330 320 310 300 290

108+00 108+50 109+00

PROFILE
Horiz 1" = 5'
Vert 1" = 10'

ENGINEERING SERVICES	GEOTECHNICAL SERVICES	STATE OF CALIFORNIA DEPARTMENT OF TRANSPORTATION	DIVISION OF ENGINEERING SERVICES STRUCTURE DESIGN DESIGN BRANCH 6	BRIDGE NO. 44E0100 POST MILES 22.6/22.8	DANI CREEK LANDSLIDE LOG OF TEST BORINGS 22 OF 25
FUNCTIONAL SUPERVISOR NAME: M. Finegan	DRAWN BY: F. Nguyen 6/10 CHECKED BY: R. Turner	FIELD INVESTIGATION BY: M. Jurasius/ R. Turner/ W. Hoon/ B. Badeker			

OGS CIVIL LOG OF TEST BORINGS SHEET

ORIGINAL SCALE IN INCHES FOR REDUCED PLANS 0 1 2 3

CU 05
EA 0T5601

DISREGARD PRINTS BEARING EARLIER REVISION DATES 08-05-10 08-04-10

REVISION DATES

SHEET 36 OF 39

FILE => ot5601-z-lotb22.dgn

USERNAME => trlenard DATE PLOTTED => 24-AUG-2010 TIME PLOTTED => 10:41

DIST	COUNTY	ROUTE	POST MILES TOTAL PROJECT	SHEET No	TOTAL SHEETS
05	Mon	1	22.6/22.8	84	86

PROFESSIONAL GEOLOGIST 8-04-10

8-16-10
PLANS APPROVAL DATE

PROFESSIONAL GEOLOGIST M. J. Jurasius No. 8618 Exp. 3-31-11 STATE OF CALIFORNIA

The State of California or its officers or agents shall not be responsible for the accuracy or completeness of electronic copies of this plan sheet.

REFERENCE: CALTRANS SOIL & ROCK LOGGING, CLASSIFICATION, AND PRESENTATION MANUAL (JUNE 2007)

CEMENTATION

Description	Criteria
Weak	Crumbles or breaks with handling or little finger pressure.
Moderate	Crumbles or breaks with considerable finger pressure.
Strong	Will not crumble or break with finger pressure.

CONSISTENCY OF COHESIVE SOILS

Description	Unconfined Compressive Strength (tsf)	Pocket Penetrometer Measurement (tsf)	Torvane Measurement (tsf)	Field Approximation
Very Soft	< 0.25	< 0.25	< 0.12	Easily penetrated several inches by fist
Soft	0.25 to 0.50	0.25 to 0.50	0.12 to 0.25	Easily penetrated several inches by thumb
Medium Stiff	0.50 to 1.0	0.50 to 1.0	0.25 to 0.50	Penetrated several inches by thumb with moderate effort
Stiff	1 to 2	1 to 2	0.50 to 1.0	Readily indented by thumb but penetrated only with great effort
Very Stiff	2 to 4	2 to 4	1.0 to 2.0	Readily indented by thumbnail
Hard	> 4.0	> 4.0	> 2.0	Indented by thumbnail with difficulty

BOREHOLE IDENTIFICATION

Symbol	Hole Type	Description
Size	A	Auger Boring
Size	R P	Rotary drilled boring Rotary percussion boring (air)
Size	R	Rotary drilled diamond core
Size	HD HA	Hand driven (1-inch soil tube) Hand Auger
●	D	Dynamic Cone Penetration Boring
▲	CPT	Cone Penetration Test (ASTM D 5778-95)
⬚	O	Other

Note: Size in inches.

PLASTICITY OF FINE-GRAINED SOILS

Description	Criteria
Nonplastic	A 1/8-inch thread cannot be rolled at any water content.
Low	The thread can barely be rolled and the lump cannot be formed when drier than the plastic limit.
Medium	The thread is easy to roll and not much time is required to reach the plastic limit. The thread cannot be rerolled after reaching the plastic limit. The lump crumbles when drier than the plastic limit.
High	It takes considerable time rolling and kneading to reach the plastic limit. The thread can be rerolled several times after reaching the plastic limit. The lump can be formed without crumbling when drier than the plastic limit.

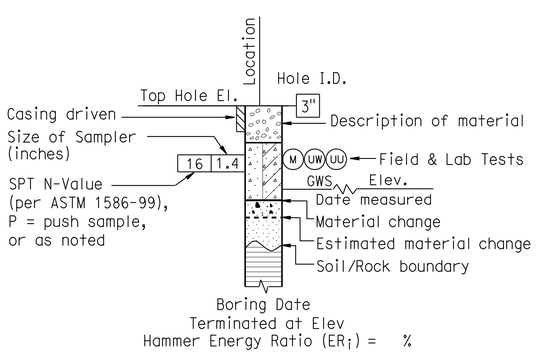

ROTARY BORING

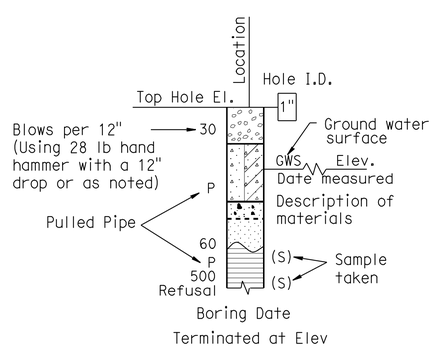

HAND BORING

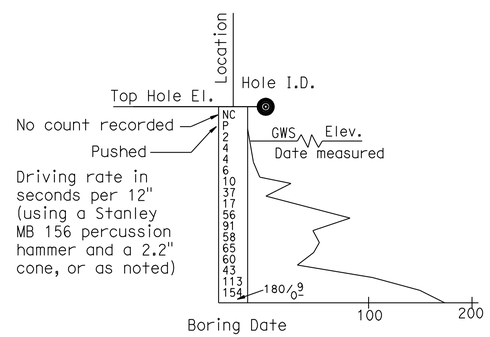

DYNAMIC CONE PENETRATION BORING

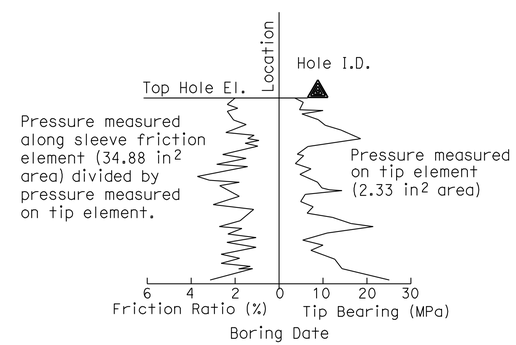

CONE PENETRATION TEST (CPT) SOUNDING

ENGINEERING SERVICES	GEOTECHNICAL SERVICES	STATE OF CALIFORNIA DEPARTMENT OF TRANSPORTATION	DIVISION OF ENGINEERING SERVICES STRUCTURE DESIGN DESIGN BRANCH 6	BRIDGE NO. 44E0100 POST MILE 22.6/22.8	DANI CREEK LANDSLIDE LOG OF TEST BORINGS 23 OF 25
	PREPARED BY: F. Nguyen 7/10				

GS LOTB SOIL LEGEND

ORIGINAL SCALE IN INCHES FOR REDUCED PLANS 0 1 2 3

CU 05
EA 0T5601

DISREGARD PRINTS BEARING EARLIER REVISION DATES

REVISION DATES

SHEET 37 OF 39

FILE => ot5601-z-lotb23.dgn

USERNAME => tfrehard DATE PLOTTED => 24-AUG-2010 TIME PLOTTED => 10:41

REFERENCE: CALTRANS SOIL & ROCK LOGGING, CLASSIFICATION, AND PRESENTATION MANUAL (JUNE 2007)

DIST	COUNTY	ROUTE	POST MILES TOTAL PROJECT	SHEET No	TOTAL SHEETS
05	Mon	1	22.6/22.8	85	86

PROFESSIONAL GEOLOGIST 8-04-10

8-16-10
PLANS APPROVAL DATE

PROFESSIONAL GEOLOGIST M. J. Jurasius No. 8618 Exp. 3-31-11 STATE OF CALIFORNIA

The State of California or its officers or agents shall not be responsible for the accuracy or completeness of electronic copies of this plan sheet.

GROUP SYMBOLS AND NAMES

Graphic/Symbol	Group Names
GW	Well-graded GRAVEL Well-graded GRAVEL with SAND
GP	Poorly graded GRAVEL Poorly graded GRAVEL with SAND
GW-GM	Well-graded GRAVEL with SILT Well-graded GRAVEL with SILT and SAND
GW-GC	Well-graded GRAVEL with CLAY (or SILTY CLAY) Well-graded GRAVEL with CLAY and SAND (or SILTY CLAY and SAND)
GP-GM	Poorly graded GRAVEL with SILT Poorly graded GRAVEL with SILT and SAND
GP-GC	Poorly graded GRAVEL with CLAY (or SILTY CLAY) Poorly graded GRAVEL with CLAY and SAND (or SILTY CLAY and SAND)
GM	SILTY GRAVEL SILTY GRAVEL with SAND
GC	CLAYEY GRAVEL CLAYEY GRAVEL with SAND
GC-GM	SILTY, CLAYEY GRAVEL SILTY, CLAYEY GRAVEL with SAND
SW	Well-graded SAND Well-graded SAND with GRAVEL
SP	Poorly graded SAND Poorly graded SAND with GRAVEL
SW-SM	Well-graded SAND with SILT Well-graded SAND with SILT and GRAVEL
SW-SC	Well-graded SAND with CLAY (or SILTY CLAY) Well-graded SAND with CLAY and GRAVEL (or SILTY CLAY and GRAVEL)
SP-SM	Poorly graded SAND with SILT Poorly graded SAND with SILT and GRAVEL
SP-SC	Poorly graded SAND with CLAY (or SILTY CLAY) Poorly graded SAND with CLAY and GRAVEL (or SILTY CLAY and GRAVEL)
SM	SILTY SAND SILTY SAND with GRAVEL
SC	CLAYEY SAND CLAYEY SAND with GRAVEL
SC-SM	SILTY, CLAYEY SAND SILTY, CLAYEY SAND with GRAVEL
PT	PEAT
	COBBLES COBBLES and BOULDERS BOULDERS

Graphic/Symbol	Group Names
CL	Lean CLAY Lean CLAY with SAND Lean CLAY with GRAVEL SANDY lean CLAY SANDY lean CLAY with GRAVEL GRAVELLY lean CLAY GRAVELLY lean CLAY with SAND
CL-ML	SILTY CLAY SILTY CLAY with SAND SILTY CLAY with GRAVEL SANDY SILTY CLAY SANDY SILTY CLAY with GRAVEL GRAVELLY SILTY CLAY GRAVELLY SILTY CLAY with SAND
ML	SILT SILT with SAND SILT with GRAVEL SANDY SILT SANDY SILT with GRAVEL GRAVELLY SILT GRAVELLY SILT with SAND
OL	ORGANIC lean CLAY ORGANIC lean CLAY with SAND ORGANIC lean CLAY with GRAVEL SANDY ORGANIC lean CLAY SANDY ORGANIC lean CLAY with GRAVEL GRAVELLY ORGANIC lean CLAY GRAVELLY ORGANIC lean CLAY with SAND
OL	ORGANIC SILT ORGANIC SILT with SAND ORGANIC SILT with GRAVEL SANDY ORGANIC SILT SANDY ORGANIC SILT with GRAVEL GRAVELLY ORGANIC SILT GRAVELLY ORGANIC SILT with SAND
CH	Fat CLAY Fat CLAY with SAND Fat CLAY with GRAVEL SANDY fat CLAY SANDY fat CLAY with GRAVEL GRAVELLY fat CLAY GRAVELLY fat CLAY with SAND
MH	Elastic SILT Elastic SILT with SAND Elastic SILT with GRAVEL SANDY elastic SILT SANDY elastic SILT with GRAVEL GRAVELLY elastic SILT GRAVELLY elastic SILT with SAND
OH	ORGANIC fat CLAY ORGANIC fat CLAY with SAND ORGANIC fat CLAY with GRAVEL SANDY ORGANIC fat CLAY SANDY ORGANIC fat CLAY with GRAVEL GRAVELLY ORGANIC fat CLAY GRAVELLY ORGANIC fat CLAY with SAND
OH	ORGANIC elastic SILT ORGANIC elastic SILT with SAND ORGANIC elastic SILT with GRAVEL SANDY ORGANIC elastic SILT SANDY ORGANIC elastic SILT with GRAVEL GRAVELLY ORGANIC elastic SILT GRAVELLY ORGANIC elastic SILT with SAND
OL/OH	ORGANIC SOIL ORGANIC SOIL with SAND ORGANIC SOIL with GRAVEL SANDY ORGANIC SOIL SANDY ORGANIC SOIL with GRAVEL GRAVELLY ORGANIC SOIL GRAVELLY ORGANIC SOIL with SAND

FIELD AND LABORATORY TESTING

- (C) Consolidation (ASTM D 2435)
- (CL) Collapse Potential (ASTM D 5333)
- (CP) Compaction Curve (CTM 216)
- (CR) Corrosivity Testing (CTM 643, CTM 422, CTM 417)
- (CU) Consolidated Undrained Triaxial (ASTM D 4767)
- (DS) Direct Shear (ASTM D 3080)
- (EI) Expansion Index (ASTM D 4829)
- (M) Moisture Content (ASTM D 2216)
- (OC) Organic Content-% (ASTM D 2974)
- (P) Permeability (CTM 220)
- (PA) Particle Size Analysis (ASTM D 422)
- (PI) Plasticity Index (AASHTO T 90) Liquid Limit (AASHTO T 89)
- (PL) Point Load Index (ASTM D 5731)
- (PM) Pressure Meter
- (PP) Pocket Penetrometer
- (R) R-Value (CTM 301)
- (SE) Sand Equivalent (CTM 217)
- (SG) Specific Gravity (AASHTO T 100)
- (SL) Shrinkage Limit (ASTM D 427)
- (SW) Swell Potential (ASTM D 4546)
- (TV) Pocket Torvane
- (UC) Unconfined Compression-Soil (ASTM D 2166) Unconfined Compression-Rock (ASTM D 2938)
- (UU) Unconsolidated Undrained Triaxial (ASTM D 2850)
- (UW) Unit Weight (ASTM D 4767)
- (VS) Vane Shear (AASHTO T 223)

APPARENT DENSITY OF COHESIONLESS SOILS

Description	SPT N_{60} (Blows / 12 inches)
Very loose	0 - 4
Loose	5 - 10
Medium Dense	11 - 30
Dense	31 - 50
Very Dense	> 50

MOISTURE

Description	Criteria
Dry	Absence of moisture, dusty, dry to the touch
Moist	Damp but no visible water
Wet	Visible free water, usually soil is below water table

PERCENT OR PROPORTION OF SOILS

Description	Criteria
Trace	Particles are present but estimated to be less than 5%
Few	5 to 10%
Little	15 to 25%
Some	30 to 45%
Mostly	50 to 100%

PARTICLE SIZE

Description		Size
Boulder		> 12"
Cobble		3" to 12"
Gravel	Coarse	3/4" to 3"
	Fine	No. 4 to 3/4"
Sand	Coarse	No. 10 to No. 4
	Medium	No. 40 to No. 10
	Fine	No. 200 to No. 40

ENGINEERING SERVICES

GEOTECHNICAL SERVICES
PREPARED BY: F. Nguyen 7/10

STATE OF CALIFORNIA DEPARTMENT OF TRANSPORTATION

DIVISION OF ENGINEERING SERVICES STRUCTURE DESIGN
DESIGN BRANCH 6

BRIDGE NO. 44E0100
POST MILE 22.6/22.8

DANI CREEK LANDSLIDE
LOG OF TEST BORINGS 24 OF 25

GS LOTB SOIL LEGEND

ORIGINAL SCALE IN INCHES FOR REDUCED PLANS 0 1 2 3

CU 05
EA 0T5601

DISREGARD PRINTS BEARING EARLIER REVISION DATES

REVISION DATES

SHEET 38 OF 39

FILE => ot5601-z-lotb24.dgn

USERNAME => trienard DATE PLOTTED => 24-AUG-2010 TIME PLOTTED => 10:41

DIST	COUNTY	ROUTE	POST MILES TOTAL PROJECT	SHEET No	TOTAL SHEETS
05	Mon	1	22.6/22.8	86	86

PROFESSIONAL GEOLOGIST 8-04-10

8-16-10
PLANS APPROVAL DATE

PROFESSIONAL GEOLOGIST M. J. Jurasius No. 8618 Exp. 3-31-11 STATE OF CALIFORNIA

The State of California or its officers or agents shall not be responsible for the accuracy or completeness of electronic copies of this plan sheet.

REFERENCE: CALTRANS SOIL & ROCK LOGGING, CLASSIFICATION, AND PRESENTATION MANUAL (JUNE 2007)

PERCENT CORE RECOVERY (REC) & ROCK QUALITY DESIGNATION (RQD)

$$REC = \frac{\sum \text{Length of the recovered core pieces (inches)}}{\text{Total length of core run (inches)}} \times 100\%$$

$$RQD = \frac{\sum \text{Length of intact core pieces} \geq 4''}{\text{Total length of core run (inches)}} \times 100\%$$

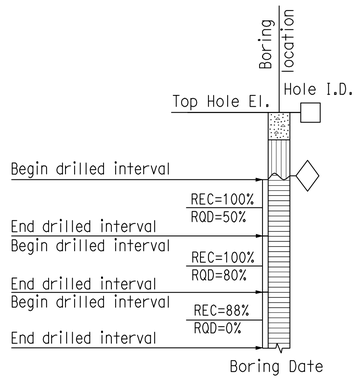

RELATIVE STRENGTH OF INTACT ROCK

Term	Uniaxial Compressive Strength (PSI)
Extremely Strong	> 30,000
Very Strong	14,500 - 30,000
Strong	7,000 - 14,500
Medium Strong	3,500 - 7,000
Weak	700 - 3,500
Very Weak	150 - 700
Extremely Weak	< 150

BEDDING SPACING

Description	Thickness / Spacing
Massive	Greater than 10 ft
Very thickly bedded	3 to 10 ft
Thickly bedded	1 to 3 ft
Moderately bedded	3-5/8" to 1 ft
Thinly bedded	1-1/4" to 3-5/8"
Very thinly bedded	3/8" to 1-1/4"
Laminated	Less than 3/8"

LEGEND OF ROCK MATERIALS

- IGNEOUS ROCK
- SEDIMENTARY ROCK
- METAMORPHIC ROCK

ROCK HARDNESS

Description	Criteria
Extremely Hard	Specimen cannot be scratched with a pocket knife or sharp pick; can only be chipped with repeated heavy hammer blows.
Very Hard	Specimen cannot be scratched with a pocket knife or sharp pick. Breaks with repeated heavy hammer blows.
Hard	Specimen can be scratched with a pocket knife or sharp pick with difficulty (heavy pressure). Heavy hammer blows required to break specimen.
Moderately Hard	Specimen can be scratched with pocket knife or sharp pick with light or moderate pressure. Core breaks with moderate hammer blows.
Moderately Soft	Specimen can be grooved 1/6" deep with a pocket knife or sharp pick with moderate or heavy pressure. Breaks with light hammer blow or heavy manual pressure.
Soft	Specimen can be grooved or gouged easily by a pocket knife or sharp pick with light pressure, can be scratched with fingernail. Breaks with light to moderate manual pressure.
Very Soft	Specimen can be readily indented, grooved or gouged with fingernail, or carved with a pocket knife. Breaks with light manual pressure.

FRACTURE DENSITY

Description	Observed Fracture Density
Unfractured	No fractures.
Very slightly fractured	Lengths greater than 3 feet.
Slightly fractured	Lengths from 1 to 3 feet with few lengths less than 1 foot or greater than 3 feet.
Moderately fractured	Lengths mostly in 4" to 1 foot range with most lengths about 8"
Intensely fractured	Lengths average from 1 to 4" with scattered fragmented intervals with lengths less than 4"
Very intensely fractured	Mostly chips and fragments with a few scattered short core lengths.

Combination descriptors (such as "Very intensely to intensely fractured") are used where equal distribution of both fracture density characteristics is present over a significant interval or exposure, or where characteristics are "in between" the descriptor definitions. Only two adjacent descriptors may be combined.

WEATHERING DESCRIPTORS FOR INTACT ROCK

Description	Diagnostic features					General Characteristics
	Chemical Weathering-Discoloration and/or oxidation		Mechanical Weathering-Grain boundary conditions (disaggregation) primarily for granitics and some coarse-grained sediments	Texture and Solutioning		
	Body of Rock	Fracture Surfaces		Texture	Solutioning	
Fresh	No discoloration, not oxidized.	No discoloration or oxidation.	No separation, intact (tight).	No change.	No solutioning.	Hammer rings when crystalline rocks are struck.
Slightly Weathered	Discoloration or oxidation is limited to surface of, or short distance from, fractures; some feldspar crystals are dull.	Minor to complete discoloration or oxidation of most surfaces.	No visible separation, intact (tight).	Preserved.	Minor leaching of some soluble minerals may be noted.	Hammer rings when crystalline rocks are struck. Body of rock not weakened.
Moderately Weathered	Discoloration or oxidation extends from fractures usually throughout; Fe-Mg minerals are "rusty," feldspar crystals are "cloudy."	All fracture surfaces are discolored or oxidized.	Partial separation of boundaries visible.	Generally preserved.	Soluble minerals may be mostly leached.	Hammer does not ring when rock is struck. Body of rock is slightly weakened.
Intensely Weathered	Discoloration or oxidation throughout; all feldspars and Fe-Mg minerals are altered to clay to some extent; or chemical alteration produces in-situ disaggregation, see grain boundary conditions.	All fracture surfaces are discolored or oxidized, surfaces friable.	Partial separation, rock is friable; in semiarid conditions granitics are disaggregated.	Texture altered by chemical disintegration (hydration, argillation).	Leaching of soluble minerals may be complete.	Dull sound when struck with hammer, usually can be broken with moderate to heavy manual pressure or by light hammer blow without reference to planes of weakness such as incipient or hairline fractures, or veinlets. Rock is significantly weakened.
Decomposed	Discolored or oxidized throughout, but resistant minerals such as quartz may be unaltered; all feldspars and Fe-Mg minerals are completely altered to clay.		Complete separation of grain boundaries (disaggregated).	Resembles a soil, partial or complete remnant rock structure may be preserved; leaching of soluble minerals usually complete.		Can be granulated by hand. Resistant minerals such as quartz may be present as "stringers" or "dikes."

Combination descriptors (such as "slightly weathered to fresh") are permissible where equal distribution of both weathering characteristics is present over significant intervals or where characteristics present are "in between" the diagnostic feature. However, combination descriptors should not be used where significant, identifiable zones can be delineated. Only two adjacent descriptors may be combined. "Very intensely weathered" is the combination descriptor for "intensely weathered to decomposed."

ENGINEERING SERVICES	GEOTECHNICAL SERVICES	STATE OF CALIFORNIA DEPARTMENT OF TRANSPORTATION	DIVISION OF ENGINEERING SERVICES STRUCTURE DESIGN DESIGN BRANCH 6	BRIDGE NO. 44E0100 POST MILE 22.6/22.8	DANI CREEK LANDSLIDE LOG OF TEST BORINGS 25 OF 25
	PREPARED BY: F. Nguyen 7/10		CU 05 EA 0T5601	DISREGARD PRINTS BEARING EARLIER REVISION DATES →	REVISION DATES SHEET 39 OF 39

GS LOTB ROCK LEGEND

ORIGINAL SCALE IN INCHES FOR REDUCED PLANS 0 1 2 3

FILE => ot5601-z-lotb25.dgn

USERNAME => trlenard DATE PLOTTED => 24-AUG-2010 TIME PLOTTED => 10:41