Dist	COUNTY	ROUTE	POST MILES TOTAL PROJECT	SHEET No.	TOTAL SHEETS
05	SCr	1	17.7/18.1	1	47

STATE OF CALIFORNIA **ACHSSTPG-P001(562)E**

DEPARTMENT OF TRANSPORTATION

PROJECT PLANS FOR CONSTRUCTION ON

STATE HIGHWAY

IN SANTA CRUZ COUNTY
IN SANTA CRUZ
FROM 0.1 MILE NORTH OF JUNCTION ROUTE 9
TO 0.1 MILE NORTH OF HIGH STREET PEDESTRIAN OVERCROSSING

TO BE SUPPLEMENTED BY STANDARD PLANS DATED MAY 2006

INDEX OF PLANS

SHEET No.	DESCRIPTION
1	TITLE AND LOCATION MAP
2-5	TYPICAL CROSS SECTIONS
6-8	LAYOUTS
9-14	CONSTRUCTION DETAILS
15-27	DRAINAGE PLANS, PROFILES, DETAILS AND QUANTITIES
28-30	UTILITY PLANS
31	CONSTRUCTION AREA SIGNS
32	SUMMARY OF QUANTITIES
33-34	SIGN PLANS, PAVEMENT DELINEATION QUANTITIES AND DETAILS
35-47	REVISED AND NEW STANDARD PLANS

THE STANDARD PLANS LIST APPLICABLE TO THIS CONTRACT IS INCLUDED IN THE NOTICE TO BIDDERS AND SPECIAL PROVISIONS BOOK.

LOCATION MAP

BEGIN CONSTRUCTION
Sta 45+78 PM 17.7

END CONSTRUCTION
Sta 66+70 PM 18.1

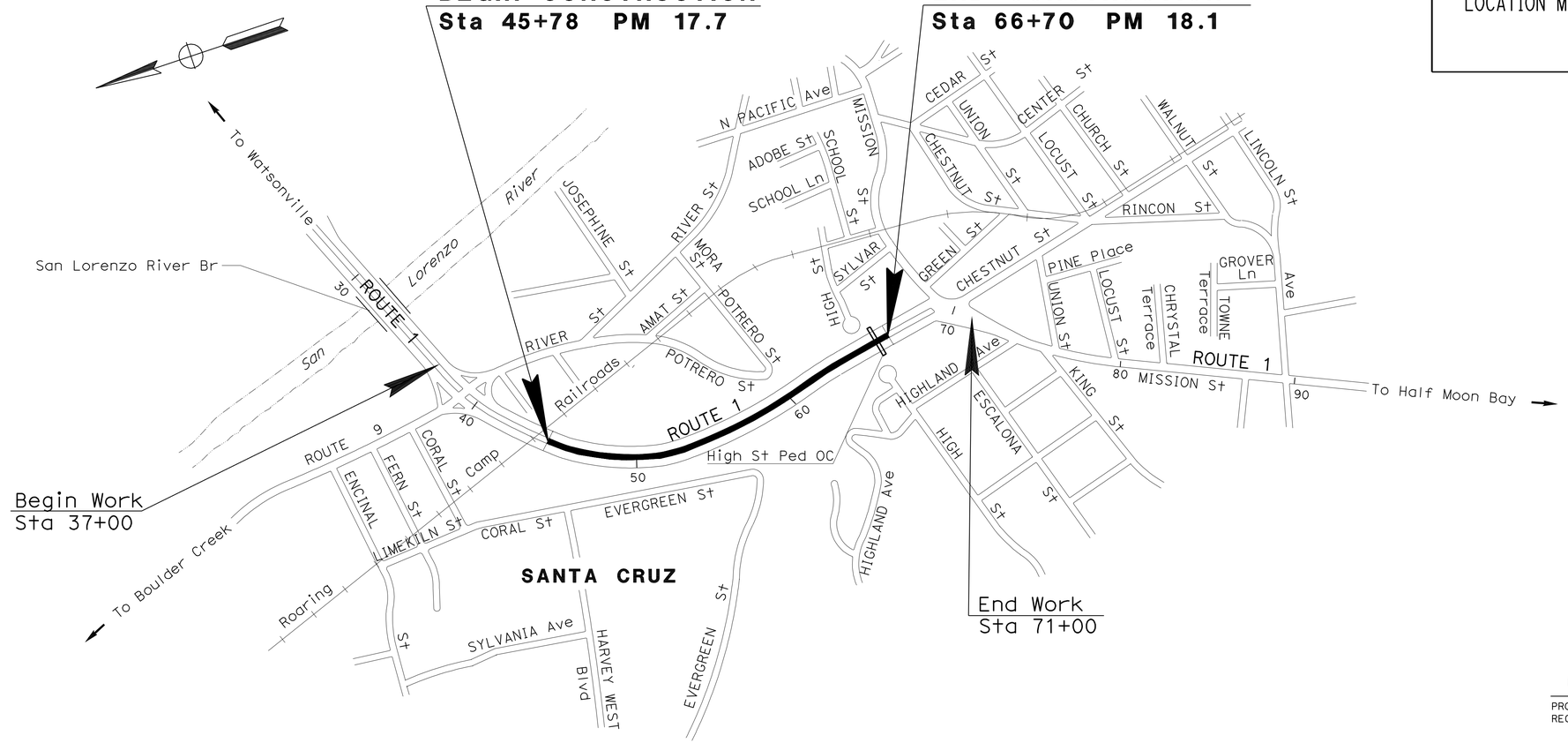

NO SCALE

THE CONTRACTOR SHALL POSSESS THE CLASS (OR CLASSES) OF LICENSE AS SPECIFIED IN THE "NOTICE TO BIDDERS."

PROJECT MANAGER: DOUG HESSING

DESIGN ENGINEER: JIM ESPINOSA

7-18-11
PROJECT ENGINEER REGISTERED CIVIL ENGINEER — DATE

REGISTERED PROFESSIONAL ENGINEER — PETROS IYASU DEMOZ — No. 61652 — Exp. 6/30/13 — CIVIL — STATE OF CALIFORNIA

August 29, 2011
PLANS APPROVAL DATE

THE STATE OF CALIFORNIA OR ITS OFFICERS OR AGENTS SHALL NOT BE RESPONSIBLE FOR THE ACCURACY OR COMPLETENESS OF SCANNED COPIES OF THIS PLAN SHEET.

CONTRACT No.	05-0S3104
PROJECT ID	0500000420

LAST REVISION 07-18-11 — DATE PLOTTED => 26-OCT-2011 TIME PLOTTED => 06:04

NOTES:

1. DIMENSIONS OF THE PAVEMENT STRUCTURES (STRUCTURAL SECTIONS) ARE SUBJECT TO TOLERANCES SPECIFIED IN THE STANDARD SPECIFICATIONS.
2. SUPERELEVATION AS SHOWN OR AS DIRECTED BY THE ENGINEER
3. SEE LAYOUT SHEETS FOR LIMITS OF PAVING, AND CONCRETE BARRIER.

TYPICAL STRUCTURAL SECTIONS

A — Exist STRUCTURAL SECTION
0.25′ AC
0.67′ UNTREATED BASE
0.67′ SELECT MATERIAL

B — COLD PLANE AC Pvmt (0.15′ Max)
0.15′ HMA (TYPE A)

DESIGN DESIGNATION

	2011	2020
ADT	49,706	54,670
DHV	4,192	4,736
D= 70%		
T= 3.5%		
V= 50 MPH		

Dist	COUNTY	ROUTE	POST MILES TOTAL PROJECT	SHEET No.	TOTAL SHEETS
05	SCr	1	17.7/18.1	2	47

REGISTERED CIVIL ENGINEER 7-18-11 DATE

8-29-11
PLANS APPROVAL DATE

REGISTERED PROFESSIONAL ENGINEER PETROS IYASU DEMOZ No. 61652 Exp 6/30/13 CIVIL STATE OF CALIFORNIA

THE STATE OF CALIFORNIA OR ITS OFFICERS OR AGENTS SHALL NOT BE RESPONSIBLE FOR THE ACCURACY OR COMPLETENESS OF SCANNED COPIES OF THIS PLAN SHEET.

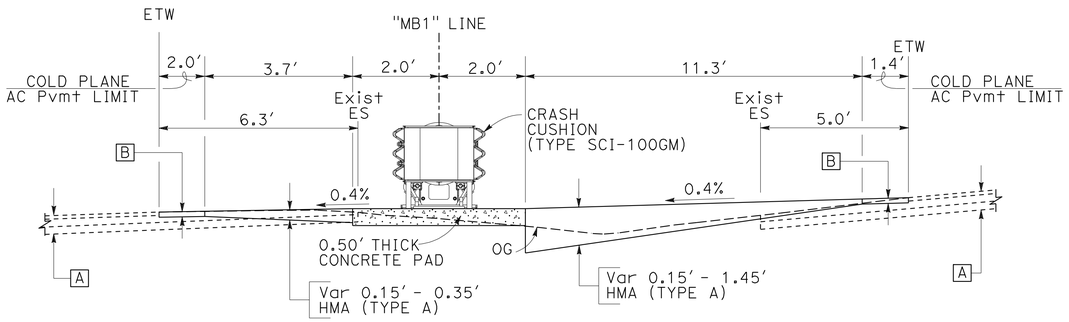

ROUTE 1
STA 46+13.00 TO STA 46+36.00

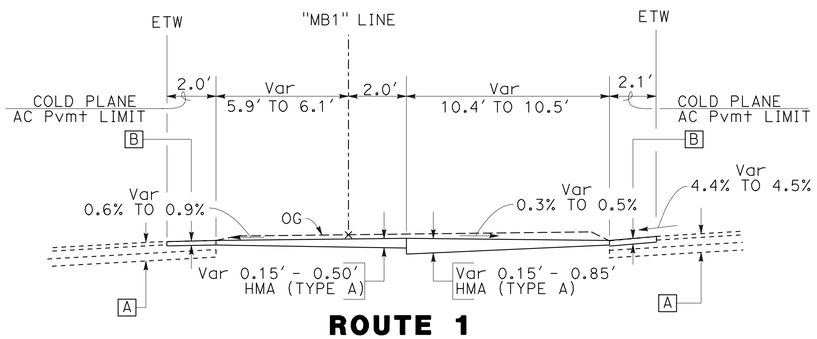

ROUTE 1
STA 45+88.65 TO STA 46+13.00

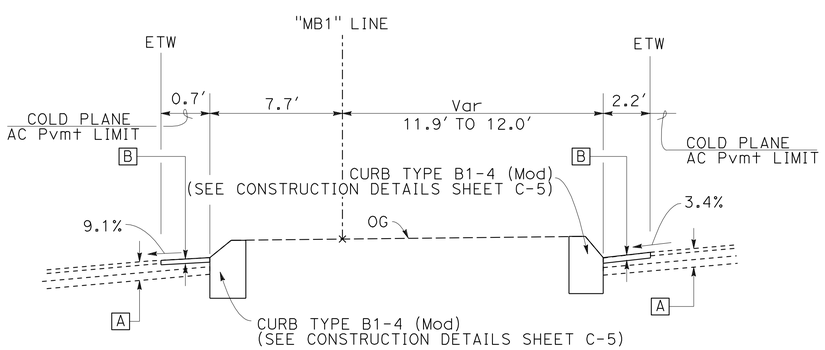

ROUTE 1
STA 45+78.05 TO STA 45+88.65

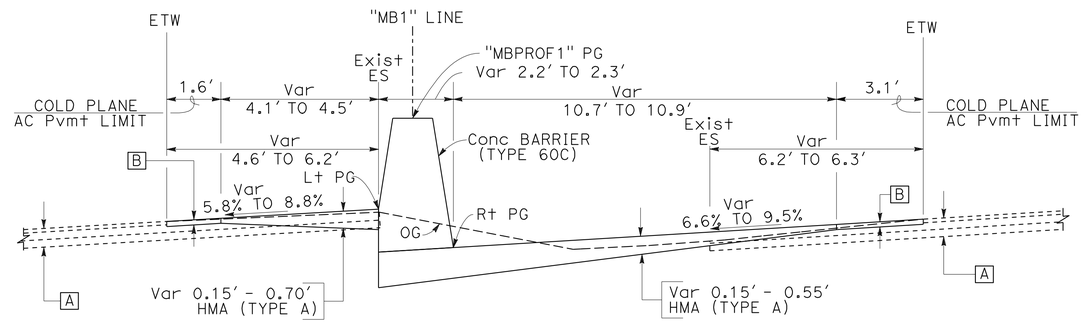

ROUTE 1
STA 46+51.00 TO STA 49+48.26

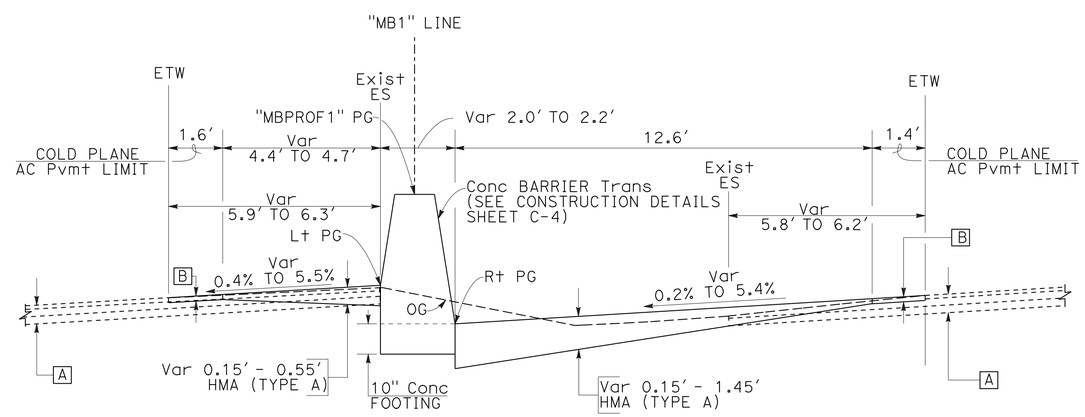

ROUTE 1
STA 46+36.00 TO STA 46+51.00

TYPICAL CROSS SECTIONS

NO SCALE

X-1

STATE OF CALIFORNIA - DEPARTMENT OF TRANSPORTATION
Caltrans®
06-DESIGN

FUNCTIONAL SUPERVISOR: JIM ESPINOSA
CALCULATED-DESIGNED BY: PETROS DEMOZ
CHECKED BY: JIM ESPINOSA
REVISED BY
DATE REVISED

LAST REVISION 07-18-11
DATE PLOTTED => 31-AUG-2011
TIME PLOTTED => 15:39

Dist	COUNTY	ROUTE	POST MILES TOTAL PROJECT	SHEET No.	TOTAL SHEETS
05	SCr	1	17.7/18.1	3	47

REGISTERED CIVIL ENGINEER 7-18-11 DATE

8-29-11
PLANS APPROVAL DATE

REGISTERED PROFESSIONAL ENGINEER PETROS IYASU DEMOZ No. 61652 Exp. 6/30/13 CIVIL STATE OF CALIFORNIA

THE STATE OF CALIFORNIA OR ITS OFFICERS OR AGENTS SHALL NOT BE RESPONSIBLE FOR THE ACCURACY OR COMPLETENESS OF SCANNED COPIES OF THIS PLAN SHEET.

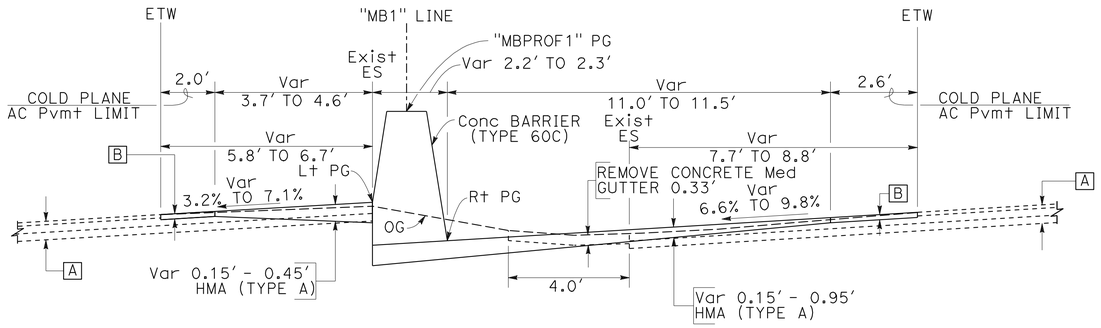

ROUTE 1

STA 53+50.00 TO STA 57+00.00

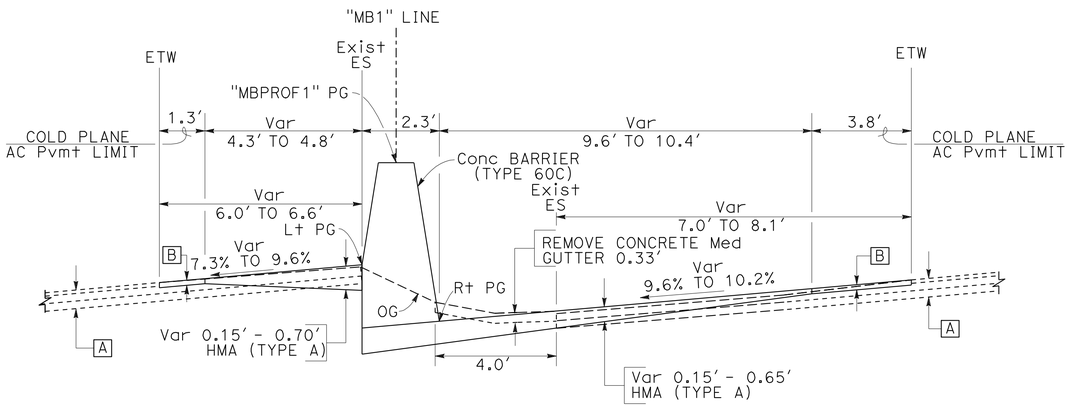

ROUTE 1

STA 51+00.00 TO STA 53+50.00

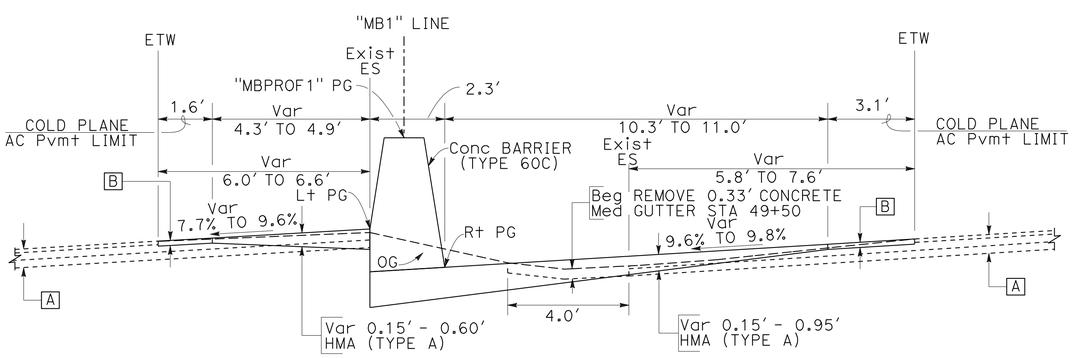

ROUTE 1

STA 49+48.26 TO STA 51+00.00

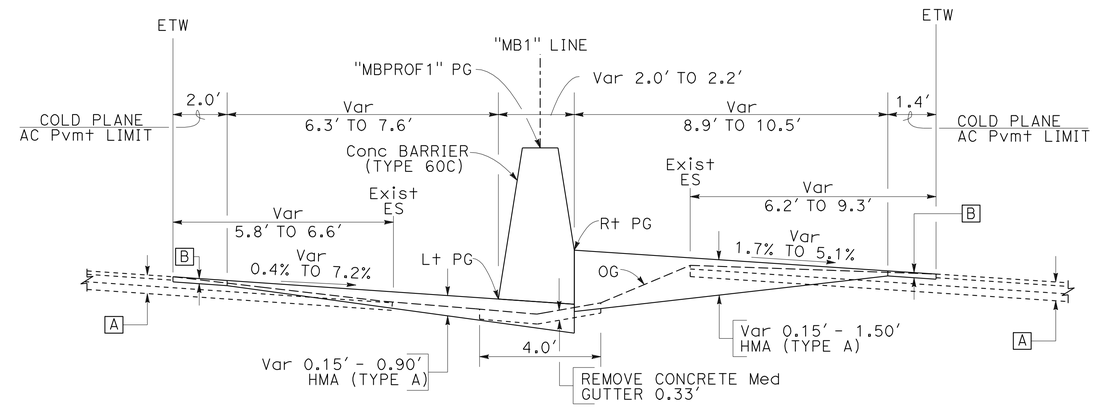

ROUTE 1

STA 59+00.00 TO STA 62+00.00

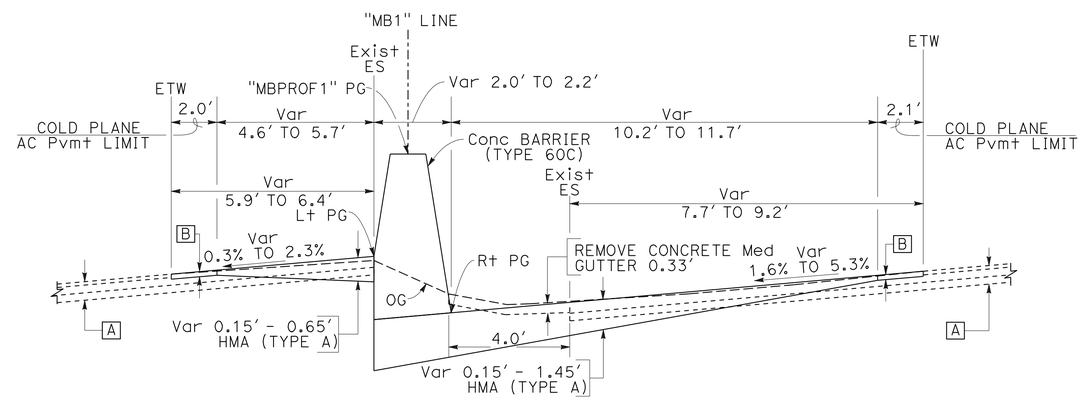

ROUTE 1

STA 57+00.00 TO STA 59+00.00

TYPICAL CROSS SECTIONS

NO SCALE

X-2

STATE OF CALIFORNIA - DEPARTMENT OF TRANSPORTATION
Caltrans®
06-DESIGN

FUNCTIONAL SUPERVISOR: JIM ESPINOSA
CALCULATED-DESIGNED BY: PETROS DEMOZ
CHECKED BY: JIM ESPINOSA
REVISED BY
DATE REVISED

LAST REVISION 03-24-11
DATE PLOTTED => 31-AUG-2011
TIME PLOTTED => 15:39

Dist	COUNTY	ROUTE	POST MILES TOTAL PROJECT	SHEET No.	TOTAL SHEETS
05	SCr	1	17.7/18.1	4	47

REGISTERED CIVIL ENGINEER 7-18-11 DATE

8-29-11
PLANS APPROVAL DATE

REGISTERED PROFESSIONAL ENGINEER PETROS IYASU DEMOZ No. 61652 Exp 6/30/13 CIVIL STATE OF CALIFORNIA

THE STATE OF CALIFORNIA OR ITS OFFICERS OR AGENTS SHALL NOT BE RESPONSIBLE FOR THE ACCURACY OR COMPLETENESS OF SCANNED COPIES OF THIS PLAN SHEET.

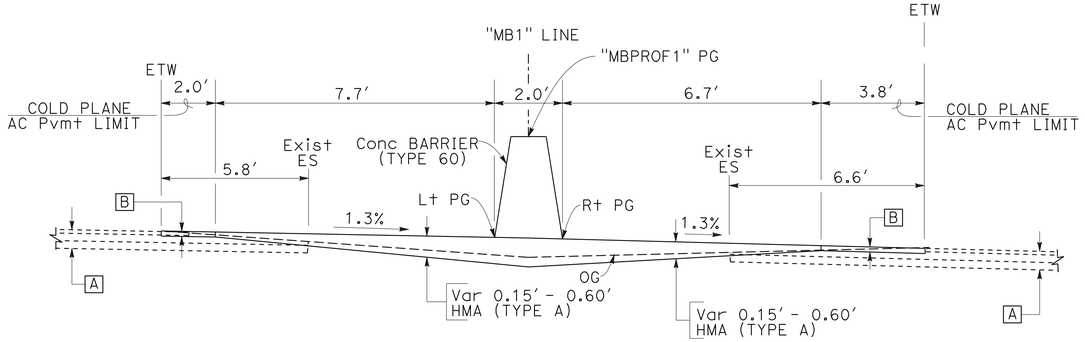

ROUTE 1

STA 65+00.00 TO STA 65+17.68

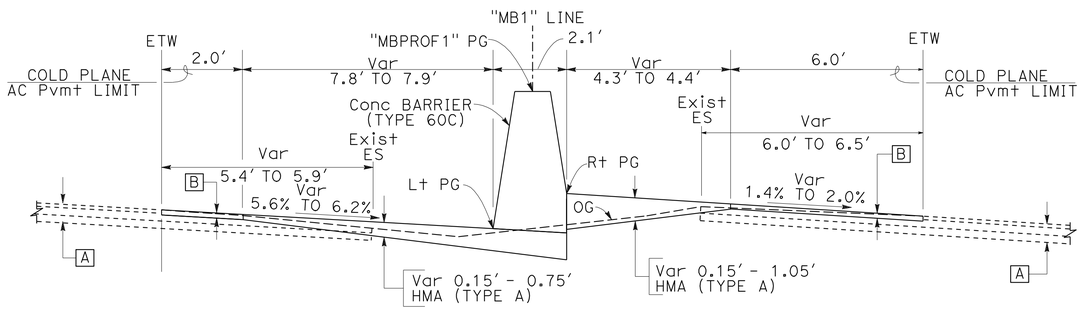

ROUTE 1

STA 64+00.00 TO STA 65+00.00

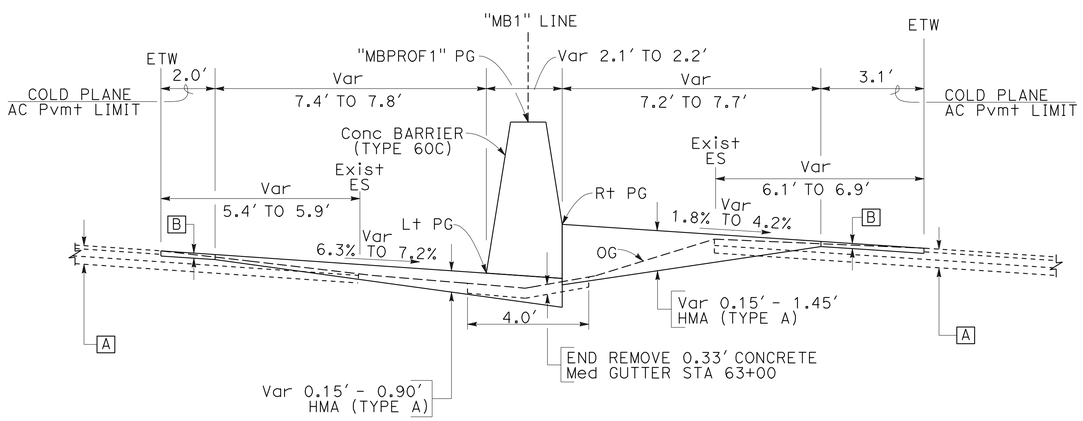

ROUTE 1

STA 62+00.00 TO STA 64+00.00

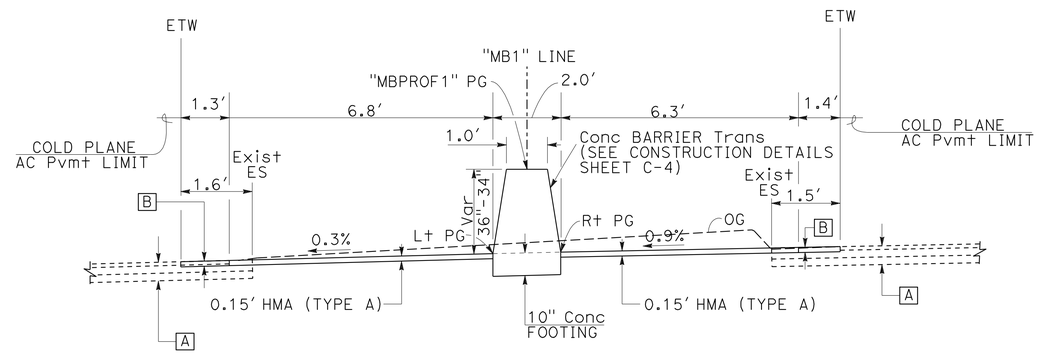

ROUTE 1

STA 66+18.10 TO STA 66+33.10

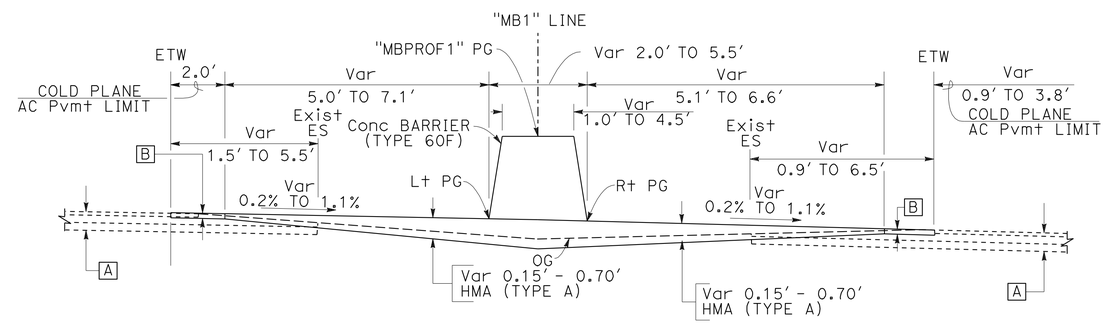

ROUTE 1

STA 65+17.68 TO STA 66+18.10

TYPICAL CROSS SECTIONS

NO SCALE

X-3

STATE OF CALIFORNIA - DEPARTMENT OF TRANSPORTATION
Caltrans
06-DESIGN

FUNCTIONAL SUPERVISOR: JIM ESPINOSA
CALCULATED-DESIGNED BY: PETROS DEMOZ
CHECKED BY: JIM ESPINOSA
REVISED BY
DATE REVISED

LAST REVISION 07-18-11
DATE PLOTTED => 31-AUG-2011
TIME PLOTTED => 15:39

Dist	COUNTY	ROUTE	POST MILES TOTAL PROJECT	SHEET No.	TOTAL SHEETS
05	SCr	1	17.7/18.1	5	47

REGISTERED CIVIL ENGINEER 7-18-11 DATE

8-29-11
PLANS APPROVAL DATE

REGISTERED PROFESSIONAL ENGINEER PETROS IYASU DEMOZ No. 61652 Exp 6/30/13 CIVIL STATE OF CALIFORNIA

THE STATE OF CALIFORNIA OR ITS OFFICERS OR AGENTS SHALL NOT BE RESPONSIBLE FOR THE ACCURACY OR COMPLETENESS OF SCANNED COPIES OF THIS PLAN SHEET.

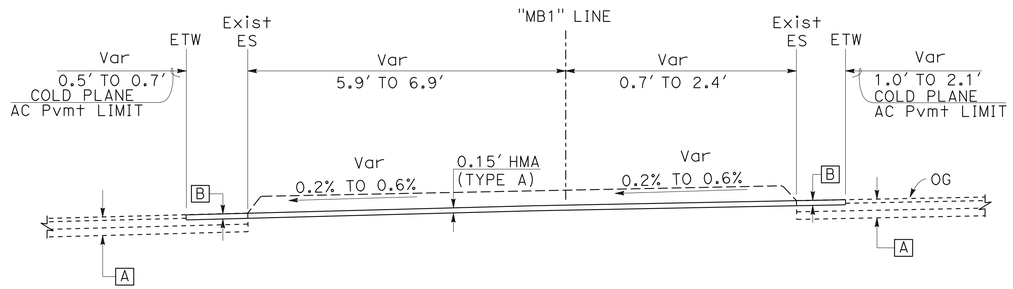

ROUTE 1

STA 66+56.10 TO STA 66+84.70

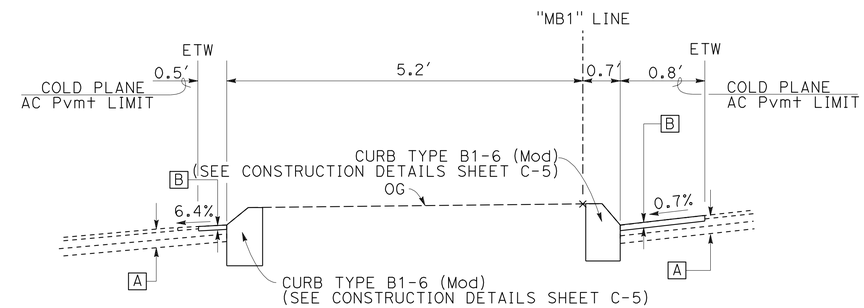

ROUTE 1

STA 66+84.70

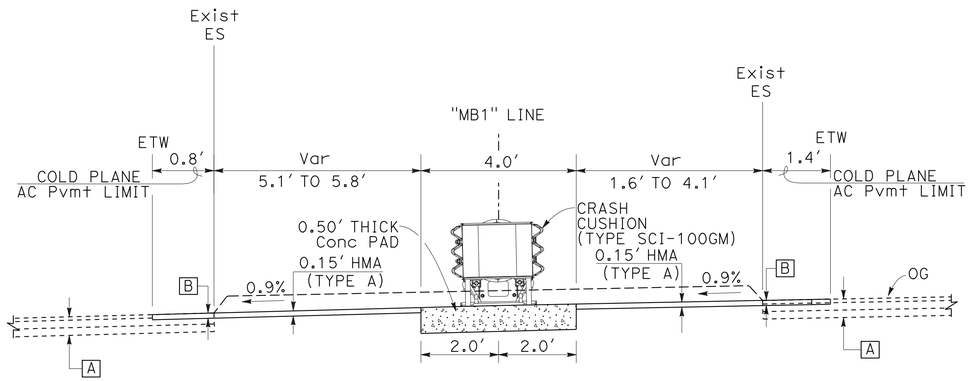

ROUTE 1

STA 66+33.10 TO STA 66+56.10

TYPICAL CROSS SECTIONS

NO SCALE

X-4

STATE OF CALIFORNIA - DEPARTMENT OF TRANSPORTATION
Caltrans®
06-DESIGN

FUNCTIONAL SUPERVISOR: JIM ESPINOSA
CALCULATED-DESIGNED BY: PETROS DEMOZ
CHECKED BY: JIM ESPINOSA
REVISED BY
DATE REVISED

LAST REVISION 03-24-11
DATE PLOTTED => 31-AUG-2011
TIME PLOTTED => 15:39

Dist	COUNTY	ROUTE	POST MILES TOTAL PROJECT	SHEET No.	TOTAL SHEETS
05	SCr	1	17.7/18.1	6	47

REGISTERED CIVIL ENGINEER 7-18-11 DATE

8-29-11
PLANS APPROVAL DATE

REGISTERED PROFESSIONAL ENGINEER PETROS IYASU DEMOZ No. 61652 Exp 6/30/13 CIVIL STATE OF CALIFORNIA

THE STATE OF CALIFORNIA OR ITS OFFICERS OR AGENTS SHALL NOT BE RESPONSIBLE FOR THE ACCURACY OR COMPLETENESS OF SCANNED COPIES OF THIS PLAN SHEET.

NOTE:

FOR ACCURATE RIGHT OF WAY DATA, CONTACT RIGHT OF WAY ENGINEERING AT THE DISTRICT OFFICE.

LEGEND:

COLD PLANE AC PAVEMENT

CURVE DATA

No.	R	Δ	T	L
1	800.00′	8°35′40″	60.11′	120.00′
2	1300.00′	16°31′40″	188.81′	375.00′
3	1146.00′	50°27′45″	540.03′	1009.32′

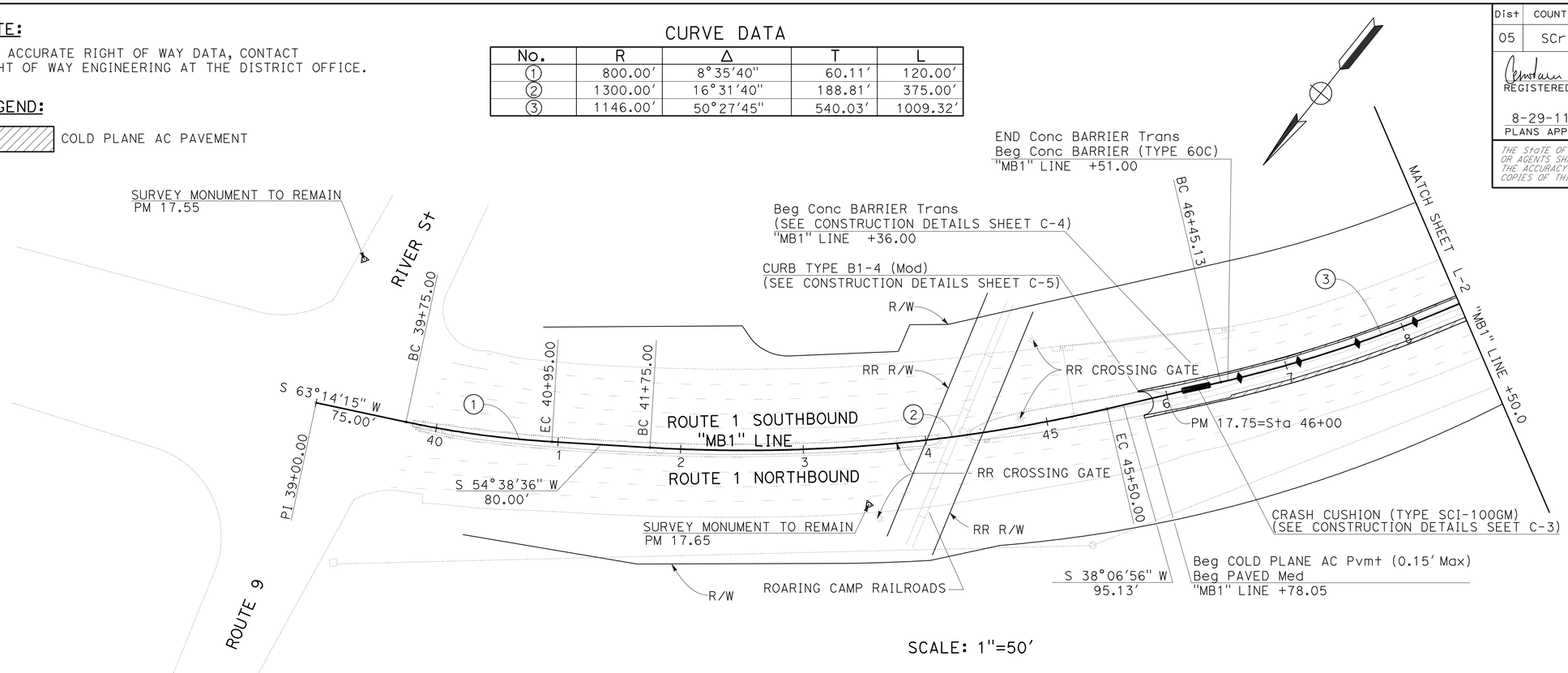

SCALE: 1"=50′

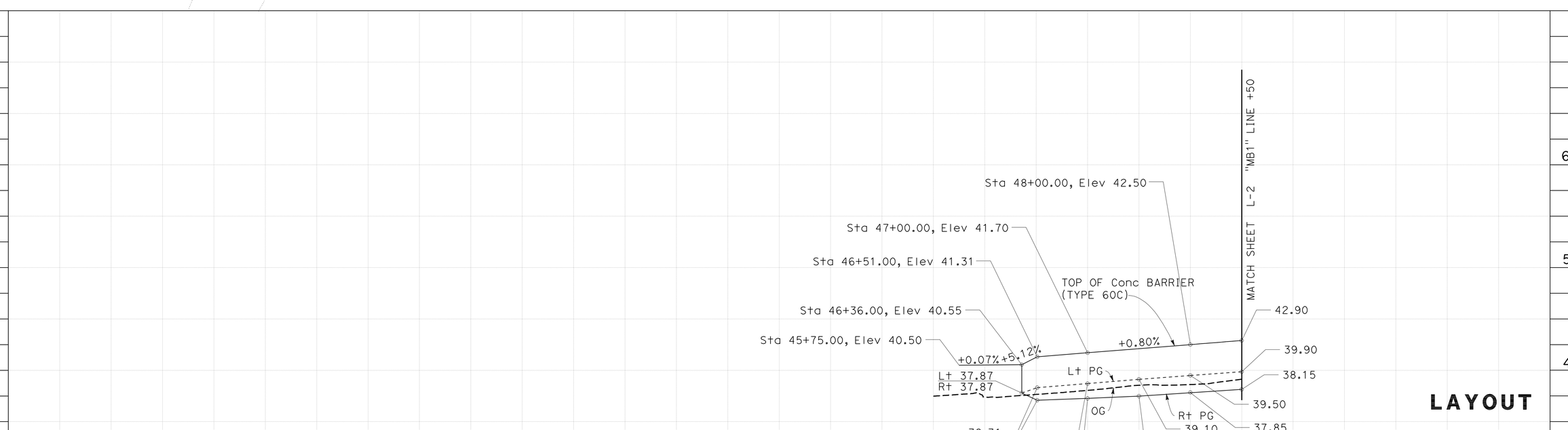

LAYOUT

SCALE: Horiz: 1"=50′
Vert: 1"=5′

L-1

REVISED BY	DATE REVISED

PETROS DEMOZ — JIM ESPINOSA — CALCULATED-DESIGNED BY
CHECKED BY
FUNCTIONAL SUPERVISOR JIM ESPINOSA

STATE OF CALIFORNIA - DEPARTMENT OF TRANSPORTATION
06-DESIGN
Caltrans

LAST REVISION 12-24-10 | DATE PLOTTED => 31-AUG-2011 | TIME PLOTTED => 15:39

Dist	COUNTY	ROUTE	POST MILES TOTAL PROJECT	SHEET No.	TOTAL SHEETS
05	SCr	1	17.7/18.1	7	47

REGISTERED CIVIL ENGINEER 7-18-11 DATE

8-29-11
PLANS APPROVAL DATE

REGISTERED PROFESSIONAL ENGINEER PETROS IYASU DEMOZ No. 61652 Exp. 6/30/13 CIVIL STATE OF CALIFORNIA

THE STATE OF CALIFORNIA OR ITS OFFICERS OR AGENTS SHALL NOT BE RESPONSIBLE FOR THE ACCURACY OR COMPLETENESS OF SCANNED COPIES OF THIS PLAN SHEET.

NOTE:

FOR ACCURATE RIGHT OF WAY DATA, CONTACT RIGHT OF WAY ENGINEERING AT THE DISTRICT OFFICE.

CURVE DATA

No.	R	Δ	T	L
3	1146.00′	50°27′45″	540.03′	1009.32′

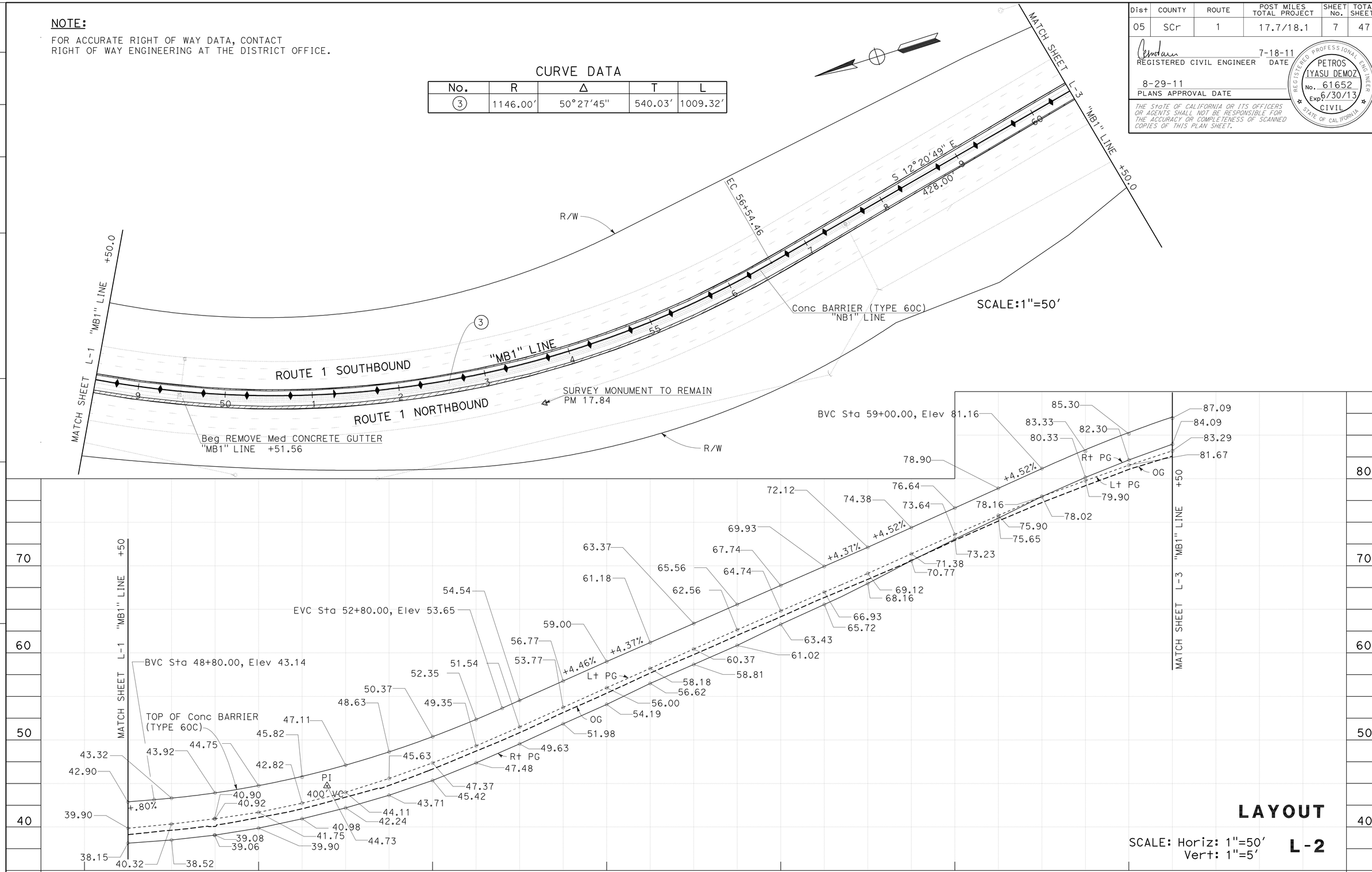

STATION	48+00	50+00	52+00	54+00	56+00	58+00	60+00	TOTAL
CY Exc								
CY Emb								

REVISED BY | DATE REVISED

PETROS DEMOZ | JIM ESPINOSA

CALCULATED-DESIGNED BY | CHECKED BY

FUNCTIONAL SUPERVISOR: JIM ESPINOSA

STATE OF CALIFORNIA - DEPARTMENT OF TRANSPORTATION

Caltrans 06-DESIGN

LAST REVISION 12-24-10 | DATE PLOTTED => 31-AUG-2011 | TIME PLOTTED => 15:39

Dist	COUNTY	ROUTE	POST MILES TOTAL PROJECT	SHEET No.	TOTAL SHEETS
05	SCr	1	17.7/18.1	8	47

REGISTERED CIVIL ENGINEER 7-18-11 DATE

8-29-11
PLANS APPROVAL DATE

REGISTERED PROFESSIONAL ENGINEER PETROS IYASU DEMOZ No. 61652 Exp 6/30/13 CIVIL STATE OF CALIFORNIA

THE STATE OF CALIFORNIA OR ITS OFFICERS OR AGENTS SHALL NOT BE RESPONSIBLE FOR THE ACCURACY OR COMPLETENESS OF SCANNED COPIES OF THIS PLAN SHEET.

NOTE:

FOR ACCURATE RIGHT OF WAY DATA, CONTACT RIGHT OF WAY ENGINEERING AT THE DISTRICT OFFICE.

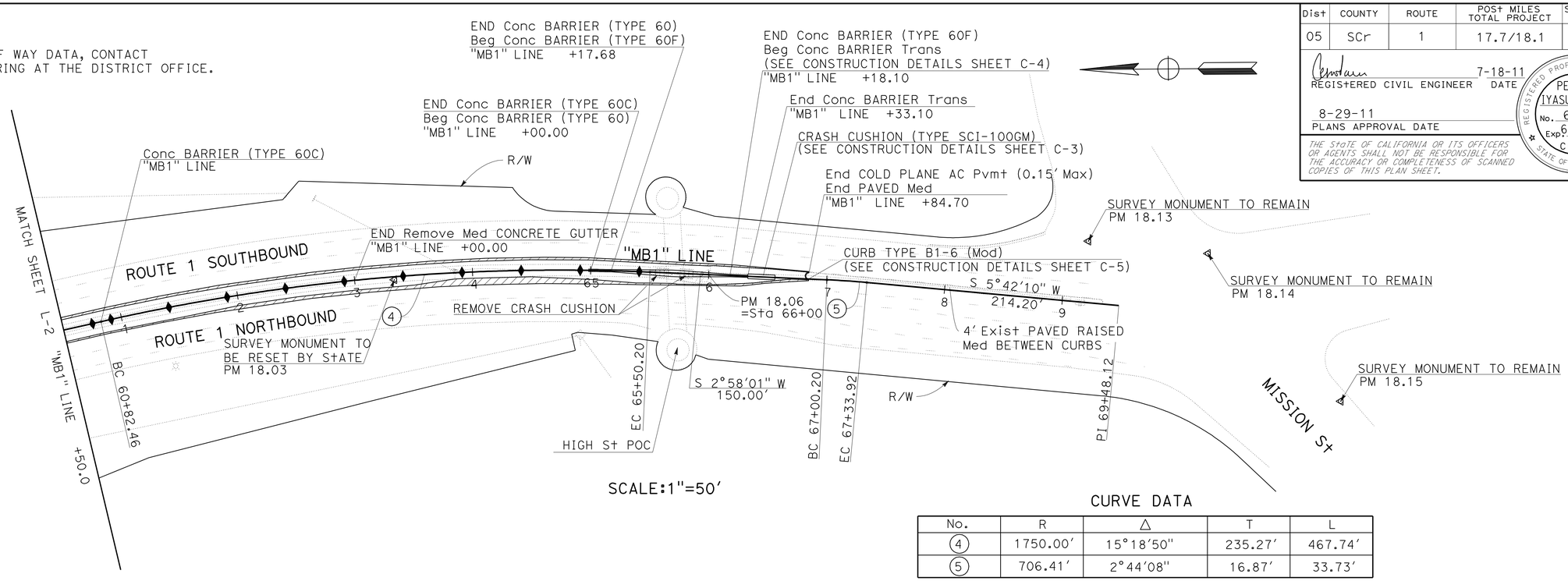

SCALE:1"=50'

CURVE DATA

No.	R	Δ	T	L
4	1750.00'	15°18'50"	235.27'	467.74'
5	706.41'	2°44'08"	16.87'	33.73'

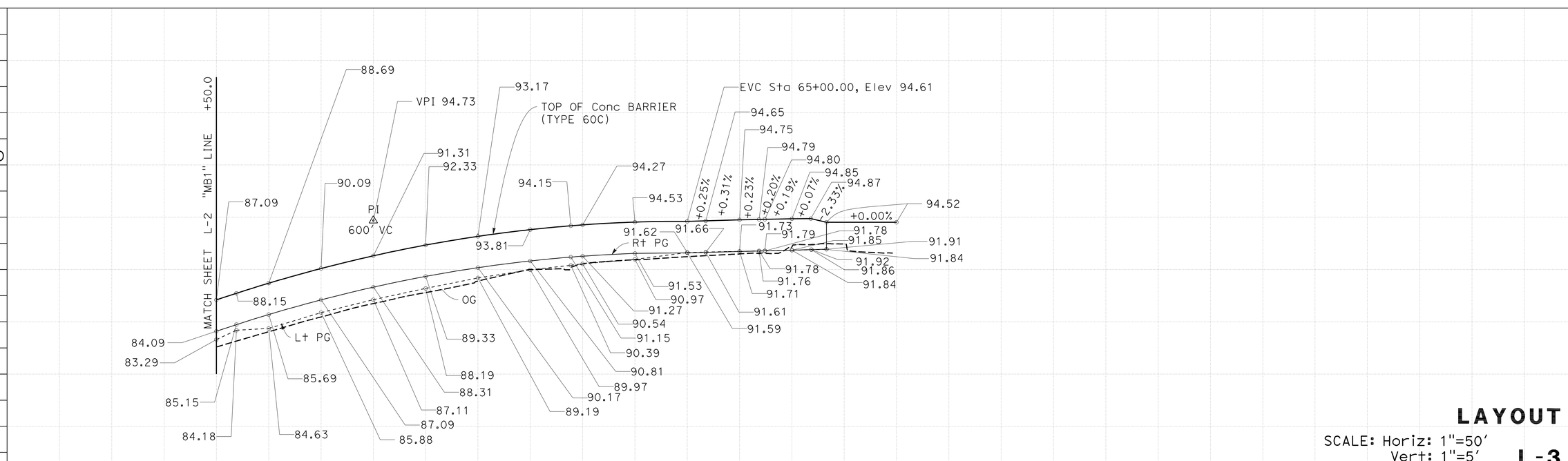

LAYOUT

SCALE: Horiz: 1"=50'
Vert: 1"=5'

L-3

STATE OF CALIFORNIA - DEPARTMENT OF TRANSPORTATION
Caltrans
06-DESIGN

FUNCTIONAL SUPERVISOR: JIM ESPINOSA
CALCULATED-DESIGNED BY: PETROS DEMOZ
CHECKED BY: JIM ESPINOSA
REVISED BY
DATE REVISED

LAST REVISION 12-24-10
DATE PLOTTED => 31-AUG-2011
TIME PLOTTED => 15:39

Dist	COUNTY	ROUTE	POST MILES TOTAL PROJECT	SHEET No.	TOTAL SHEETS
05	SCr	1	17.7/18.1	9	47

REGISTERED CIVIL ENGINEER 7-18-11 DATE

8-29-11
PLANS APPROVAL DATE

REGISTERED PROFESSIONAL ENGINEER PETROS IYASU DEMOZ No. 61652 Exp 6/30/13 CIVIL STATE OF CALIFORNIA

THE STATE OF CALIFORNIA OR ITS OFFICERS OR AGENTS SHALL NOT BE RESPONSIBLE FOR THE ACCURACY OR COMPLETENESS OF SCANNED COPIES OF THIS PLAN SHEET.

LEGEND

REMOVE TRAFFIC ISLAND

Exist RAILROAD CROSSING SIGNAL

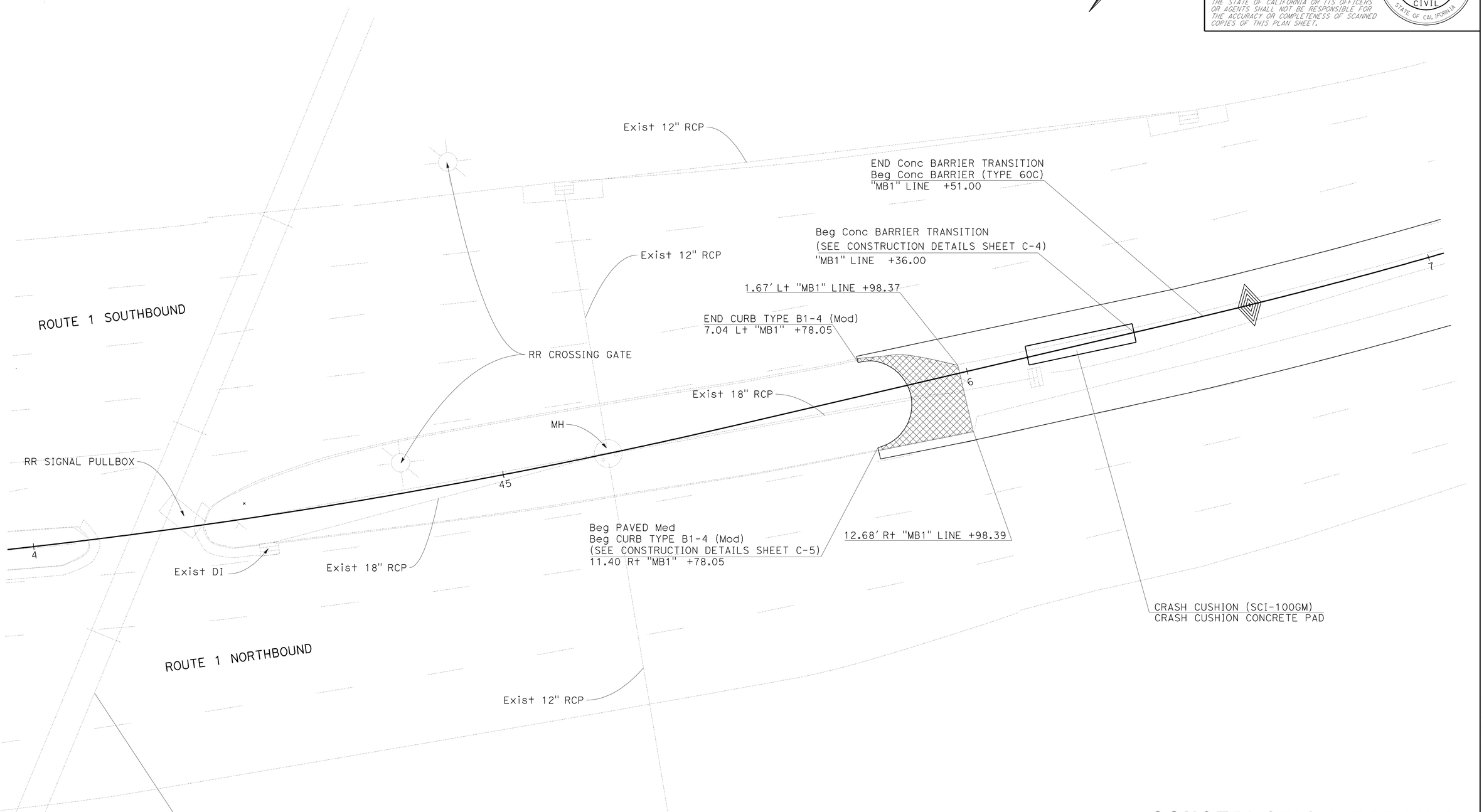

CONSTRUCTION DETAILS

SCALE: 1"=10'

C-1

STATE OF CALIFORNIA - DEPARTMENT OF TRANSPORTATION
Caltrans
06-DESIGN

FUNCTIONAL SUPERVISOR: JIM ESPINOSA
CALCULATED-DESIGNED BY: PETROS DEMOZ
CHECKED BY: JIM ESPINOSA
REVISED BY
DATE REVISED

LAST REVISION 03-15-11
DATE PLOTTED => 31-AUG-2011
TIME PLOTTED => 15:39

Dist	COUNTY	ROUTE	POST MILES TOTAL PROJECT	SHEET No.	TOTAL SHEETS
05	SCr	1	17.7/18.1	10	47

REGISTERED CIVIL ENGINEER 7-18-11 DATE

8-29-11
PLANS APPROVAL DATE

REGISTERED PROFESSIONAL ENGINEER PETROS IYASU DEMOZ No. 61652 Exp 6/30/13 CIVIL STATE OF CALIFORNIA

THE STATE OF CALIFORNIA OR ITS OFFICERS OR AGENTS SHALL NOT BE RESPONSIBLE FOR THE ACCURACY OR COMPLETENESS OF SCANNED COPIES OF THIS PLAN SHEET.

NOTE:

1. FOR DETAILS NOT SHOWN AND NOTES SEE STANDARD PLAN A76C.

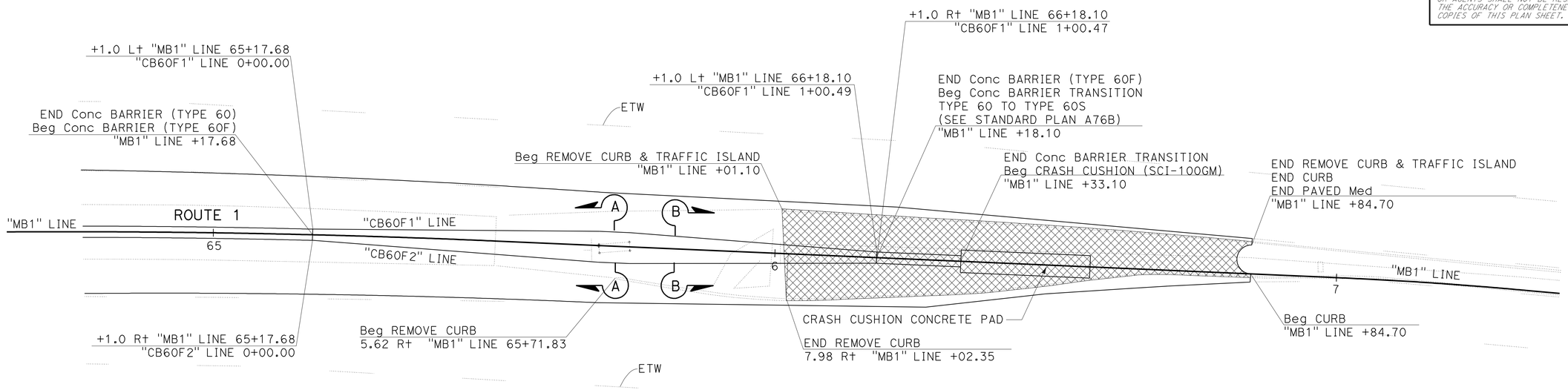

TRANSITION AT BRIDGE COLUMN

CONCRETE BARRIER (TYPE 60F)

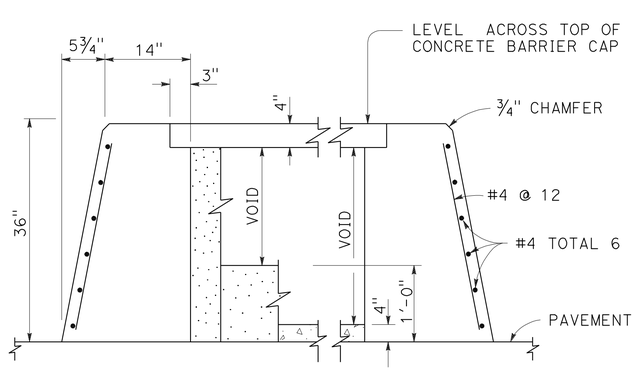

SECTION B-B

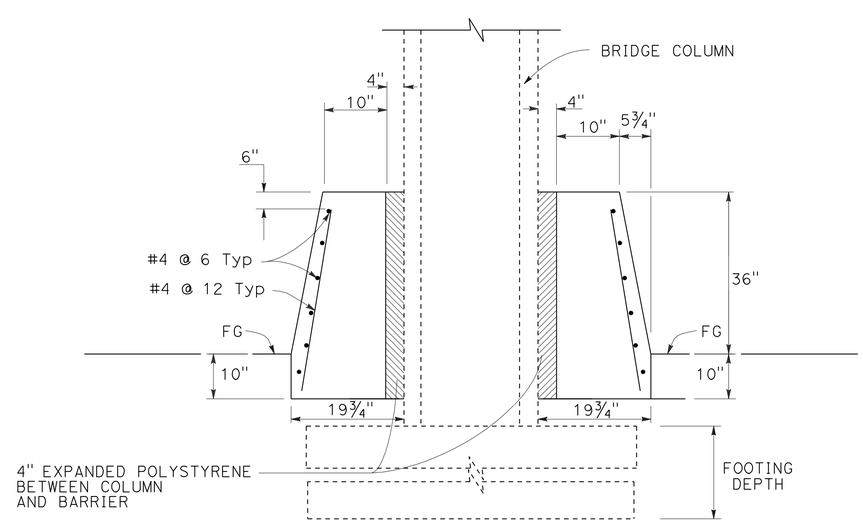

SECTION A-A

CONSTRUCTION DETAILS

NO SCALE **C-2**

STATE OF CALIFORNIA - DEPARTMENT OF TRANSPORTATION
Caltrans
06-DESIGN

FUNCTIONAL SUPERVISOR: JIM ESPINOSA

CALCULATED-DESIGNED BY: PETROS DEMOZ
CHECKED BY: JIM ESPINOSA

REVISED BY
DATE REVISED

LAST REVISION 12-24-10
DATE PLOTTED => 31-AUG-2011
TIME PLOTTED => 15:39

Dist	COUNTY	ROUTE	POST MILES TOTAL PROJECT	SHEET No.	TOTAL SHEETS
05	SCr	1	17.7/18.1	11	47

REGISTERED CIVIL ENGINEER 7-18-11 DATE

8-29-11
PLANS APPROVAL DATE

REGISTERED PROFESSIONAL ENGINEER
PETROS IYASU DEMOZ
No. 61652
Exp 6/30/13
CIVIL
STATE OF CALIFORNIA

THE STATE OF CALIFORNIA OR ITS OFFICERS OR AGENTS SHALL NOT BE RESPONSIBLE FOR THE ACCURACY OR COMPLETENESS OF SCANNED COPIES OF THIS PLAN SHEET.

NOTES:

1. CROSS SLOPE AT TOP SURFACE NOT TO EXCEED 1 IN 10. FOUNDATION MUST BE A LEVEL PLANE.
2. ANCHOR EMBEDMENT TO BE 5½".
3. 6" PCC SAMPLING PER ASTM C31-84, TESTING PER ASTM C39-84.
4. ALL REINFORCING STEEL - STRAIGHT #4 ASTM-A36.

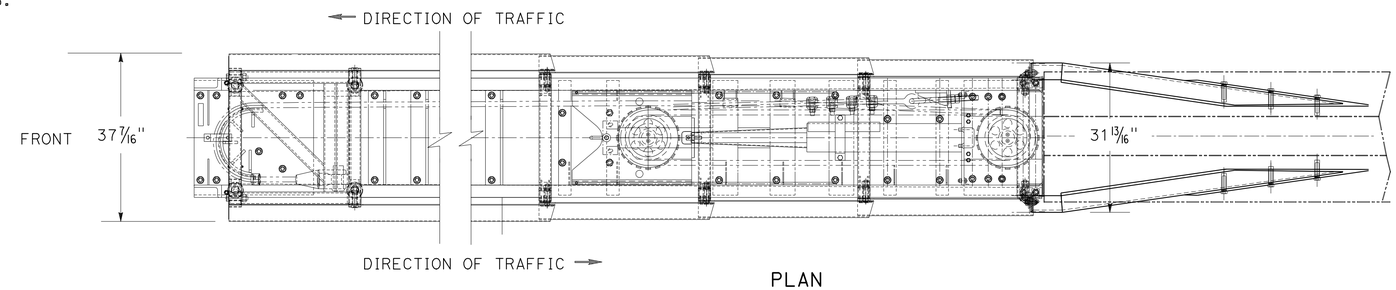

PLAN

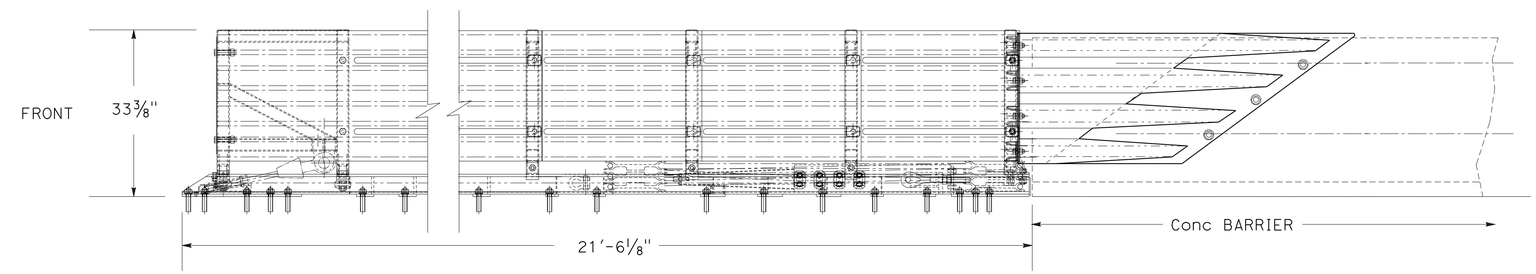

ELEVATION

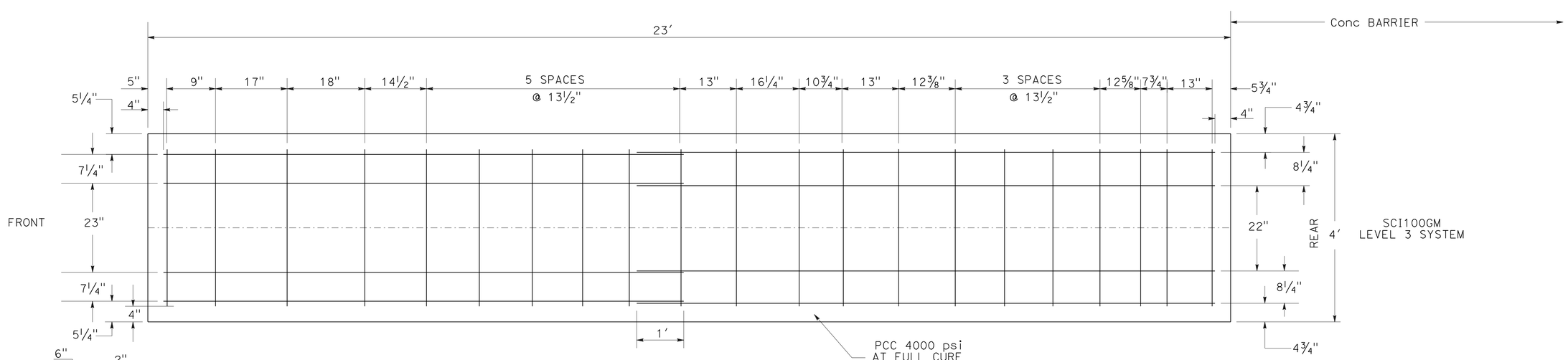

CONCRETE PAD

CONSTRUCTION DETAILS
(CRASH CUSHION SCI-100GM)

NO SCALE **C-3**

STATE OF CALIFORNIA - DEPARTMENT OF TRANSPORTATION
06-DESIGN
Caltrans

FUNCTIONAL SUPERVISOR: JIM ESPINOSA
CALCULATED-DESIGNED BY: SAL JARAMILLO
CHECKED BY: PETROS DIMOZ
REVISED BY
DATE REVISED

LAST REVISION 03-29-11
DATE PLOTTED => 31-AUG-2011
TIME PLOTTED => 15:41

Dist	COUNTY	ROUTE	POST MILES TOTAL PROJECT	SHEET No.	TOTAL SHEETS
05	SCr	1	17.7/18.1	12	47

REGISTERED CIVIL ENGINEER 7-18-11 DATE

8-29-11
PLANS APPROVAL DATE

REGISTERED PROFESSIONAL ENGINEER PETROS IYASU DEMOZ No. 61652 Exp 6/30/13 CIVIL STATE OF CALIFORNIA

THE STATE OF CALIFORNIA OR ITS OFFICERS OR AGENTS SHALL NOT BE RESPONSIBLE FOR THE ACCURACY OR COMPLETENESS OF SCANNED COPIES OF THIS PLAN SHEET.

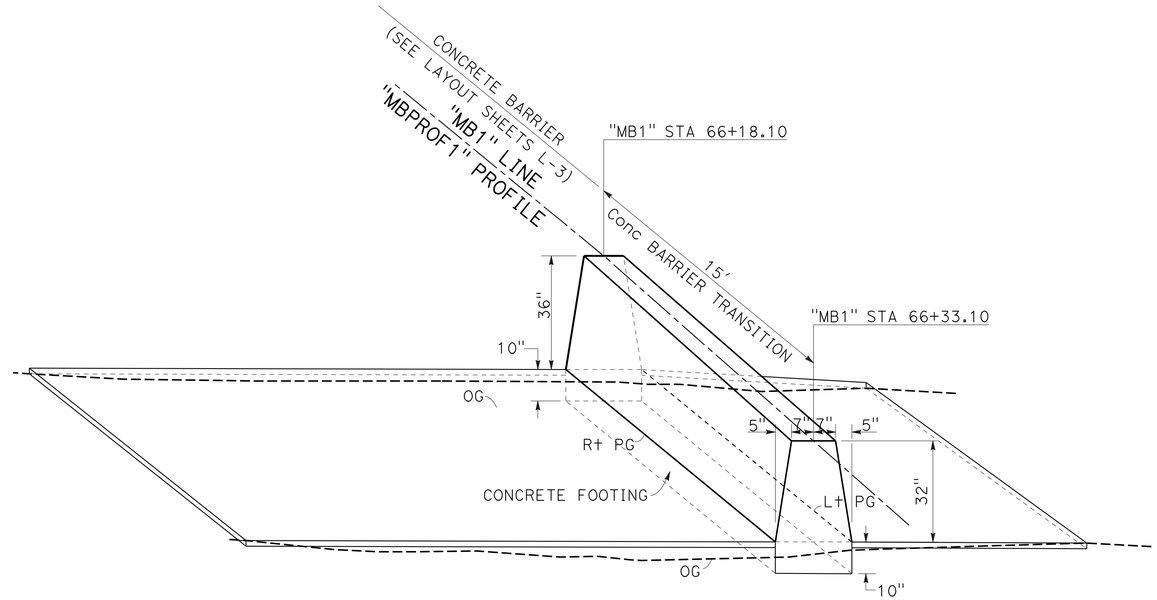

CONCRETE BARRIER TRANSITION

"MB1" STA 66+18.10 TO 66+33.10

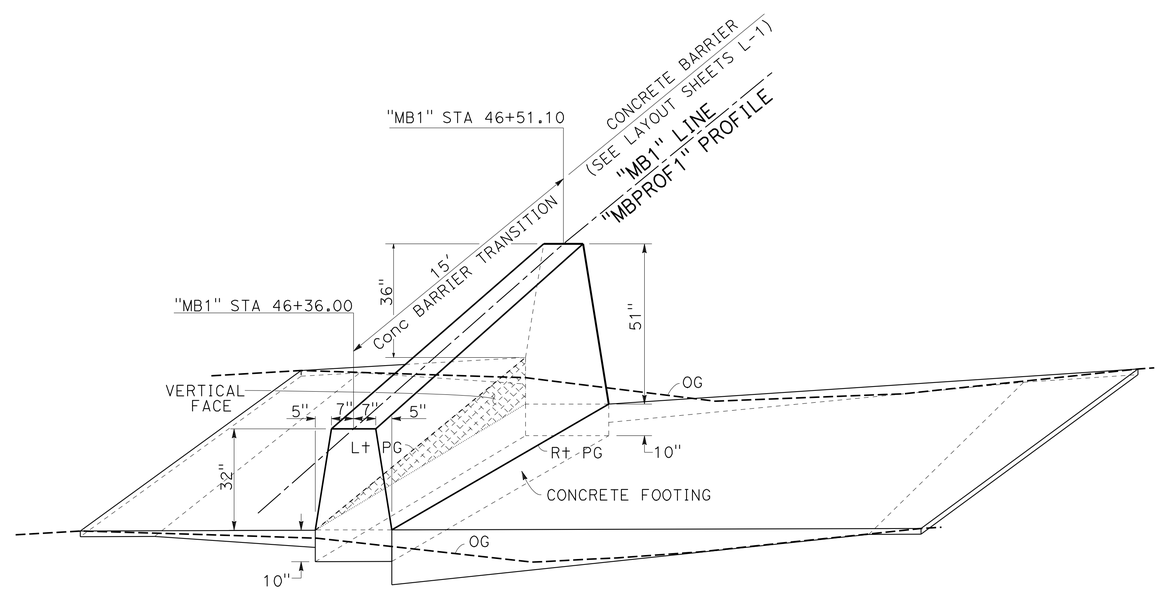

CONCRETE BARRIER TRANSITION

"MB1" STA 46+36.00 TO 46+51.00

CONSTRUCTION DETAILS

NO SCALE **C-4**

STATE OF CALIFORNIA - DEPARTMENT OF TRANSPORTATION
Caltrans
06-DESIGN

FUNCTIONAL SUPERVISOR: JIM ESPINOSA
CALCULATED-DESIGNED BY: PETROS DEMOZ
CHECKED BY: JIM ESPINOSA
REVISED BY
DATE REVISED

LAST REVISION 04-06-11
DATE PLOTTED => 31-AUG-2011
TIME PLOTTED => 15:41

Dist	COUNTY	ROUTE	POST MILES TOTAL PROJECT	SHEET No.	TOTAL SHEETS
05	SCr	1	17.7/18.1	13	47

REGISTERED CIVIL ENGINEER 7-18-11 DATE

8-29-11
PLANS APPROVAL DATE

REGISTERED PROFESSIONAL ENGINEER PETROS IYASU DEMOZ No. 61652 Exp 6/30/13 CIVIL STATE OF CALIFORNIA

THE STATE OF CALIFORNIA OR ITS OFFICERS OR AGENTS SHALL NOT BE RESPONSIBLE FOR THE ACCURACY OR COMPLETENESS OF SCANNED COPIES OF THIS PLAN SHEET.

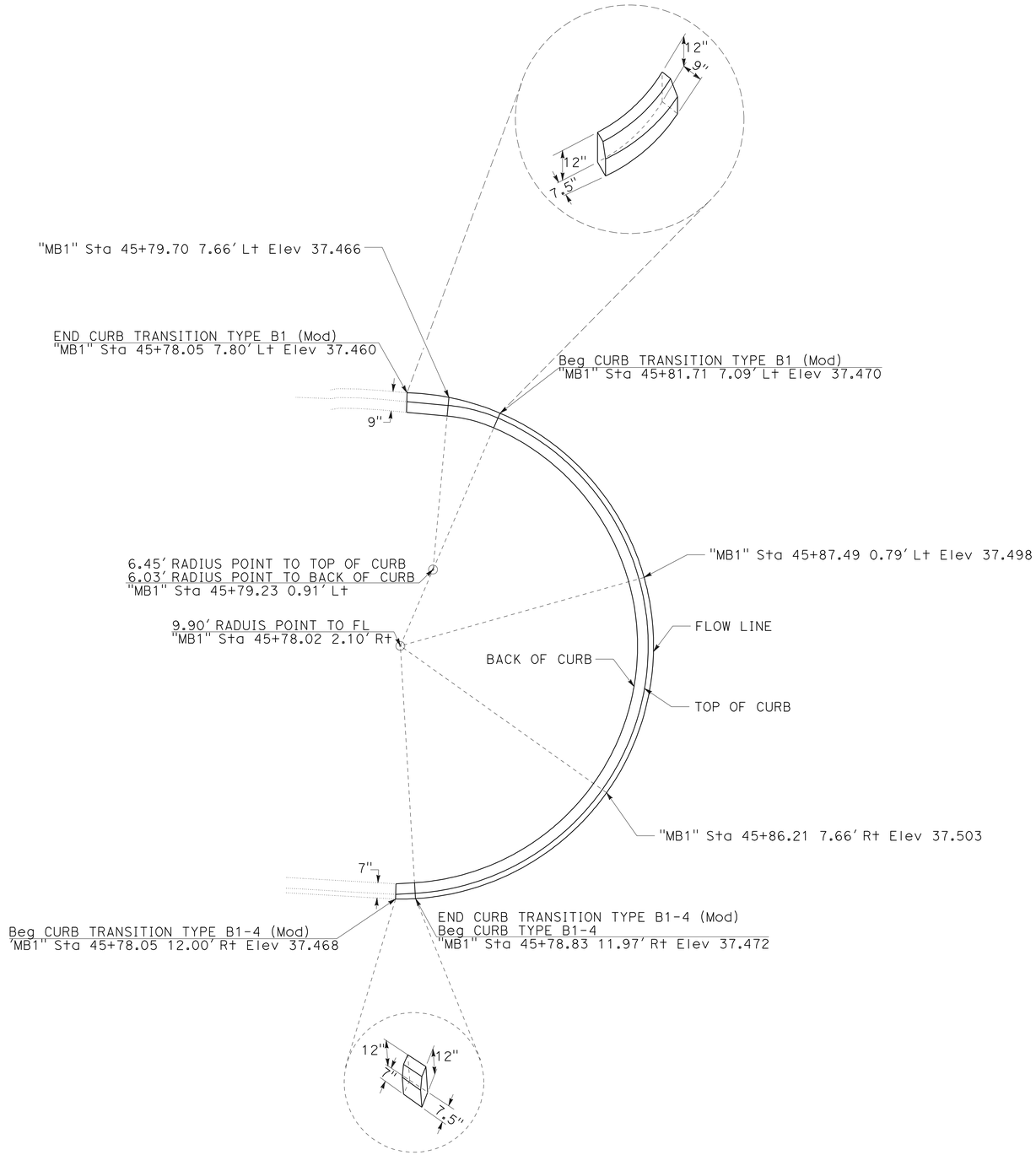

CURB TYPE B1-4 (Mod)

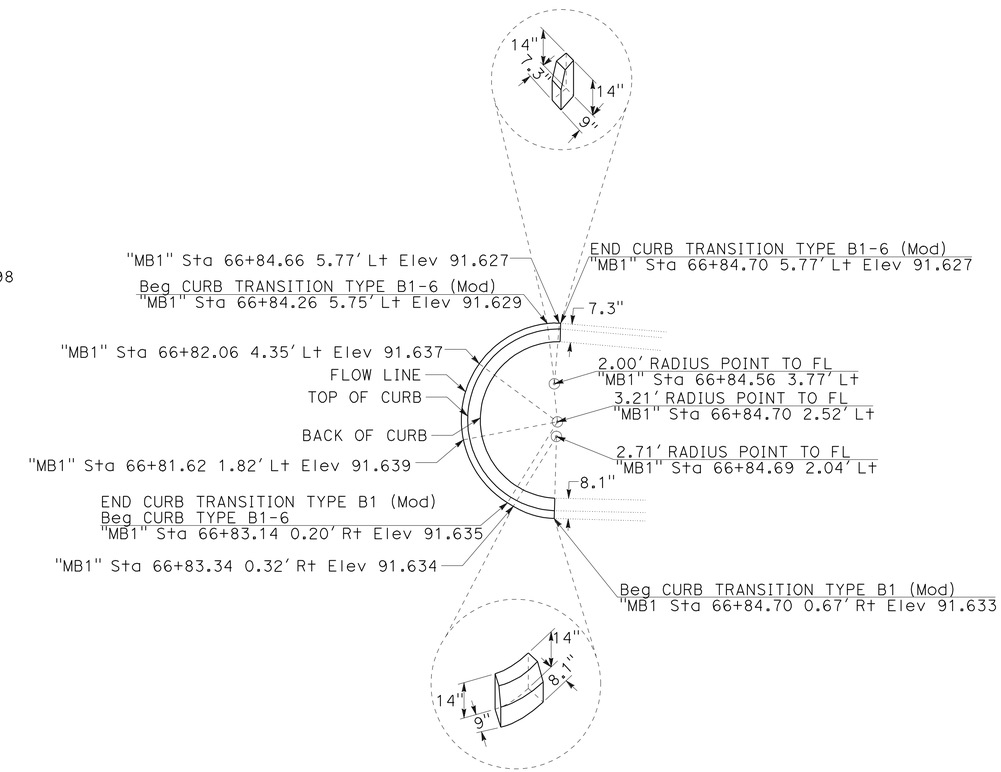

CURB TYPE B1-6 (Mod)

CONSTRUCTION DETAILS

NO SCALE **C-5**

REVISED BY | DATE REVISED

PETROS DEMOZ | JIM ESPINOSA

CALCULATED-DESIGNED BY | CHECKED BY

FUNCTIONAL SUPERVISOR: JIM ESPINOSA

STATE OF CALIFORNIA - DEPARTMENT OF TRANSPORTATION

Caltrans® 06-DESIGN

LAST REVISION 04-06-11 | DATE PLOTTED => 31-AUG-2011 | TIME PLOTTED => 15:41

Dist	COUNTY	ROUTE	POST MILES TOTAL PROJECT	SHEET No.	TOTAL SHEETS
05	SCr	1	17.7/18.1	14	47

LICENSED LANDSCAPE ARCHITECT 7-18-11

PLANS APPROVAL DATE 8-29-11

LICENSED LANDSCAPE ARCHITECT PETROS IYASU DEMOZ 61652 6/30/13 STATE OF CALIFORNIA

THE STATE OF CALIFORNIA OR ITS OFFICERS OR AGENTS SHALL NOT BE RESPONSIBLE FOR THE ACCURACY OR COMPLETENESS OF SCANNED COPIES OF THIS PLAN SHEET.

NOTES:

1. LEADING EDGES OF TEXTURE RELIEF SHALL BE ROUNDED OR CHAMFERED.
2. TEXTURAL RELIEF NOT TO PROTRUDE BEYOND PLANE OF BARRIER FACE.

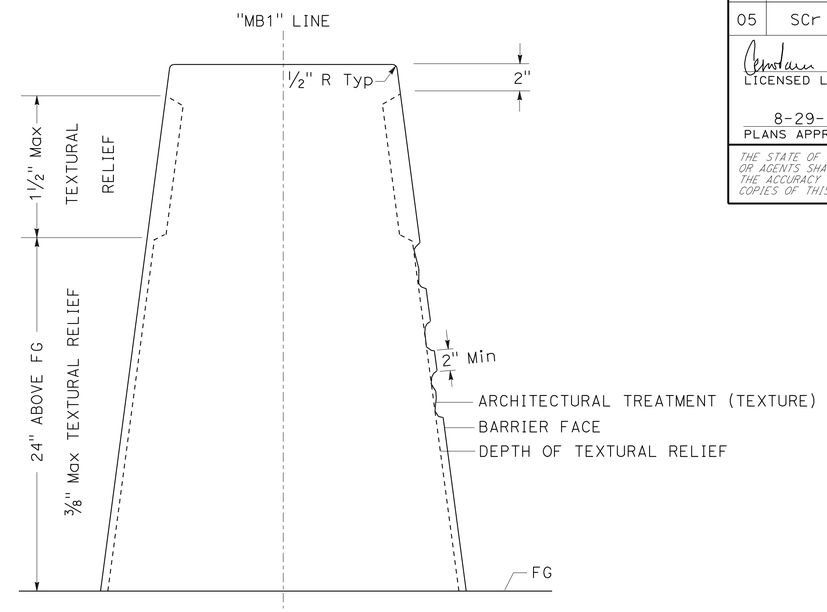

SECTION

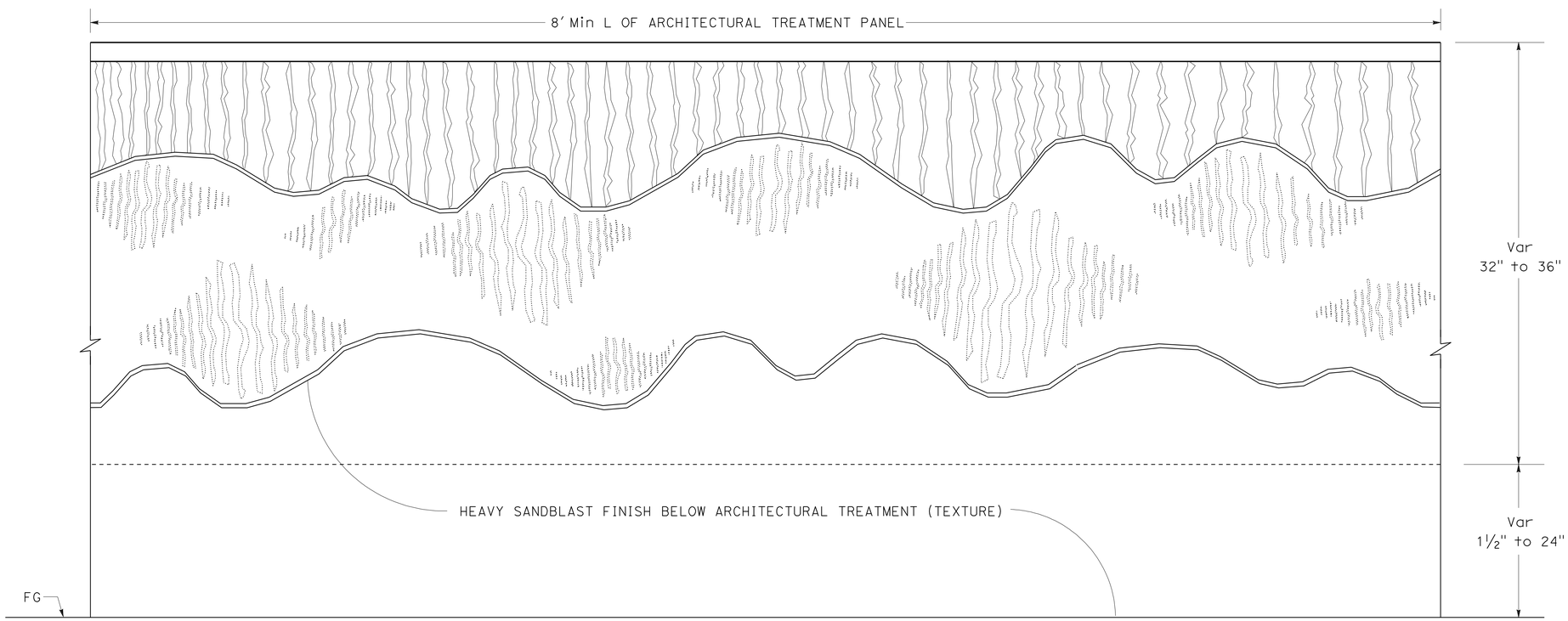

ELEVATION

CONCRETE BARRIER ARCHITECTURAL TREATMENT (TEXTURE)

CONSTRUCTION DETAILS

NO SCALE **C-6**

REVISED BY	DATE REVISED

CALCULATED-DESIGNED BY: BRYAN PARKER
CHECKED BY: CORBY KILMER
SENIOR LANDSCAPE ARCHITECT: DENNIS REEVES

STATE OF CALIFORNIA - DEPARTMENT OF TRANSPORTATION
Caltrans LANDSCAPE ARCHITECTURE

LAST REVISION 05-19-11 | DATE PLOTTED => 31-AUG-2011 | TIME PLOTTED => 15:42

Dist	COUNTY	ROUTE	POST MILES TOTAL PROJECT	SHEET No.	TOTAL SHEETS
05	SCr	1	17.7/18.1	15	47

REGISTERED CIVIL ENGINEER 7-18-11 DATE

8-29-11
PLANS APPROVAL DATE

REGISTERED PROFESSIONAL ENGINEER PETROS IYASU DEMOZ No. 61652 Exp 6/30/13 CIVIL STATE OF CALIFORNIA

THE STATE OF CALIFORNIA OR ITS OFFICERS OR AGENTS SHALL NOT BE RESPONSIBLE FOR THE ACCURACY OR COMPLETENESS OF SCANNED COPIES OF THIS PLAN SHEET.

NOTE:

FOR ACCURATE RIGHT OF WAY DATA, CONTACT RIGHT OF WAY ENGINEERING AT THE DISTRICT OFFICE.

LEGEND

X DRAINAGE SYSTEM No.

DRAINAGE UNIT No.

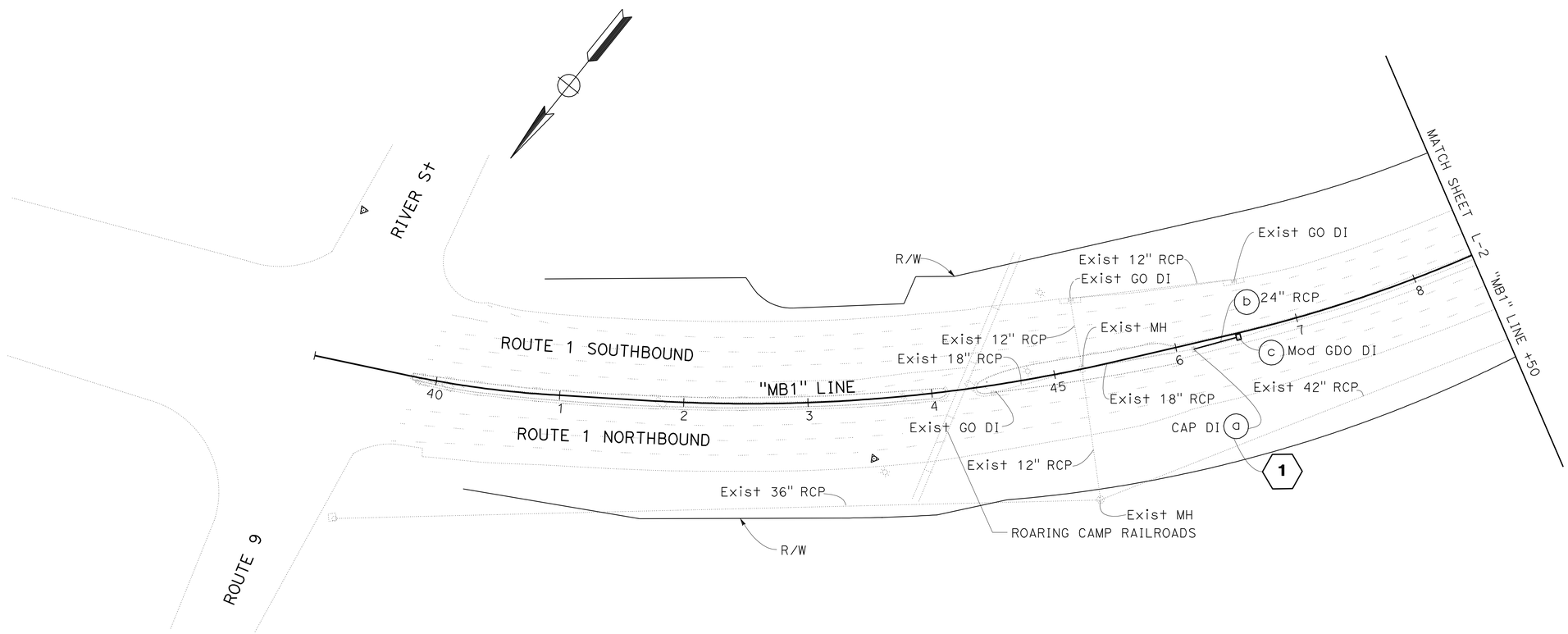

DRAINAGE PLAN

SCALE: 1"=50'

D-1

APPROVED FOR DRAINAGE WORK ONLY

STATE OF CALIFORNIA - DEPARTMENT OF TRANSPORTATION
06-DESIGN
Caltrans

FUNCTIONAL SUPERVISOR: JIM ESPINOSA
CALCULATED-DESIGNED BY: SAL JARAMILLO
CHECKED BY: PETROS DEMOZ
REVISED BY
DATE REVISED

LAST REVISION 12-24-10
DATE PLOTTED => 31-AUG-2011
TIME PLOTTED => 15:42

Dist	COUNTY	ROUTE	POST MILES TOTAL PROJECT	SHEET No.	TOTAL SHEETS
05	SCr	1	17.7/18.1	16	47

REGISTERED CIVIL ENGINEER 7-18-11 DATE

8-29-11
PLANS APPROVAL DATE

REGISTERED PROFESSIONAL ENGINEER
PETROS IYASU DEMOZ
No. 61652
Exp 6/30/13
CIVIL
STATE OF CALIFORNIA

THE STATE OF CALIFORNIA OR ITS OFFICERS OR AGENTS SHALL NOT BE RESPONSIBLE FOR THE ACCURACY OR COMPLETENESS OF SCANNED COPIES OF THIS PLAN SHEET.

NOTE:

FOR ACCURATE RIGHT OF WAY DATA, CONTACT RIGHT OF WAY ENGINEERING AT THE DISTRICT OFFICE.

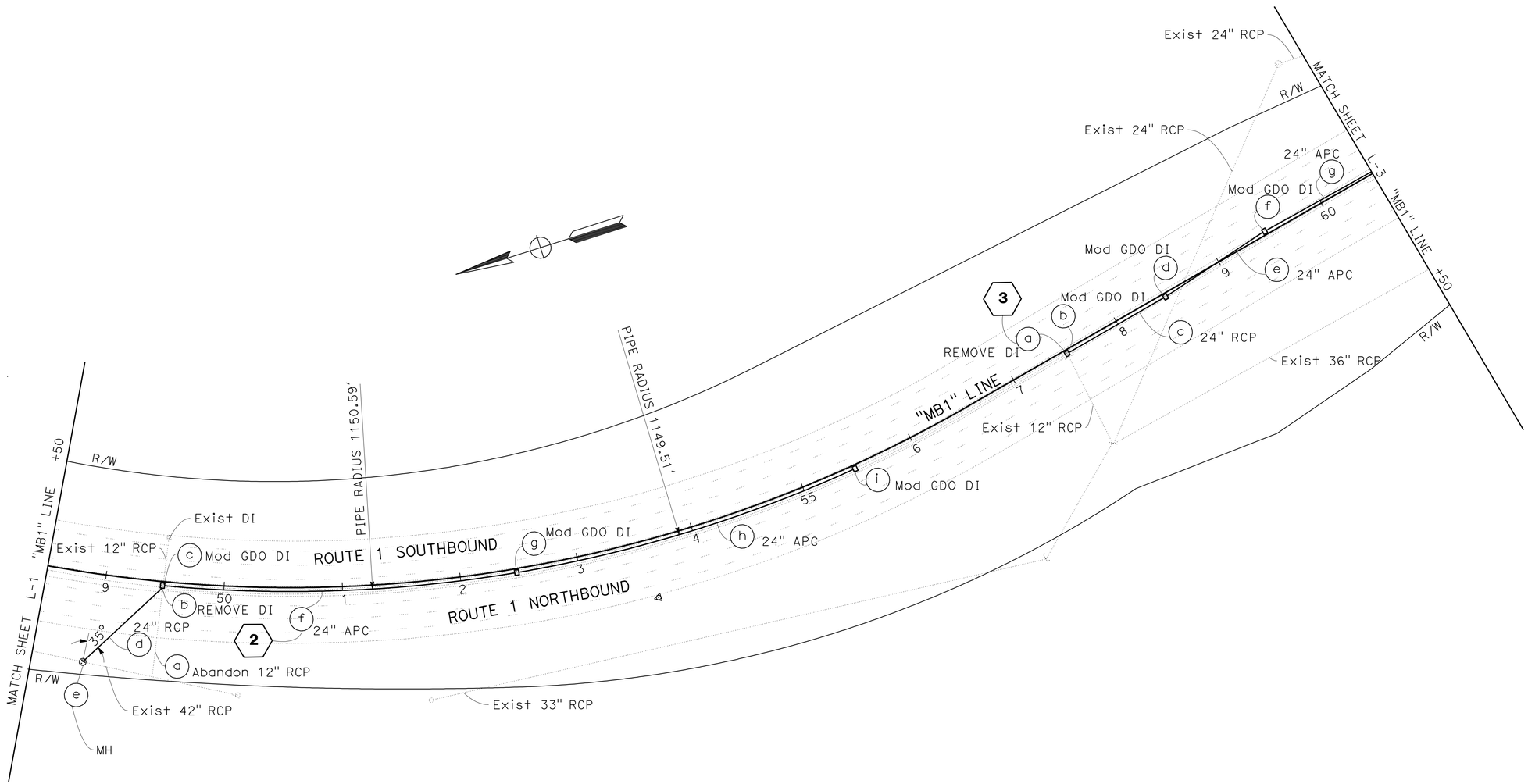

APPROVED FOR DRAINAGE WORK ONLY

DRAINAGE PLAN

SCALE: 1" = 50'

D-2

STATE OF CALIFORNIA - DEPARTMENT OF TRANSPORTATION
Caltrans
06-DESIGN

FUNCTIONAL SUPERVISOR: JIM ESPINOSA
CALCULATED-DESIGNED BY: SAL JARAMILLO
CHECKED BY: PETROS DEMOZ
REVISED BY
DATE REVISED

LAST REVISION 12-24-10
DATE PLOTTED => 31-AUG-2011
TIME PLOTTED => 17:03

Dist	COUNTY	ROUTE	POST MILES TOTAL PROJECT	SHEET No.	TOTAL SHEETS
05	SCr	1	17.7/18.1	17	47

REGISTERED CIVIL ENGINEER 7-18-11 DATE

8-29-11
PLANS APPROVAL DATE

REGISTERED PROFESSIONAL ENGINEER
PETROS IYASU DEMOZ
No. 61652
Exp 6/30/13
CIVIL
STATE OF CALIFORNIA

THE STATE OF CALIFORNIA OR ITS OFFICERS OR AGENTS SHALL NOT BE RESPONSIBLE FOR THE ACCURACY OR COMPLETENESS OF SCANNED COPIES OF THIS PLAN SHEET.

NOTE:

FOR ACCURATE RIGHT OF WAY DATA, CONTACT
RIGHT OF WAY ENGINEERING AT THE DISTRICT OFFICE.

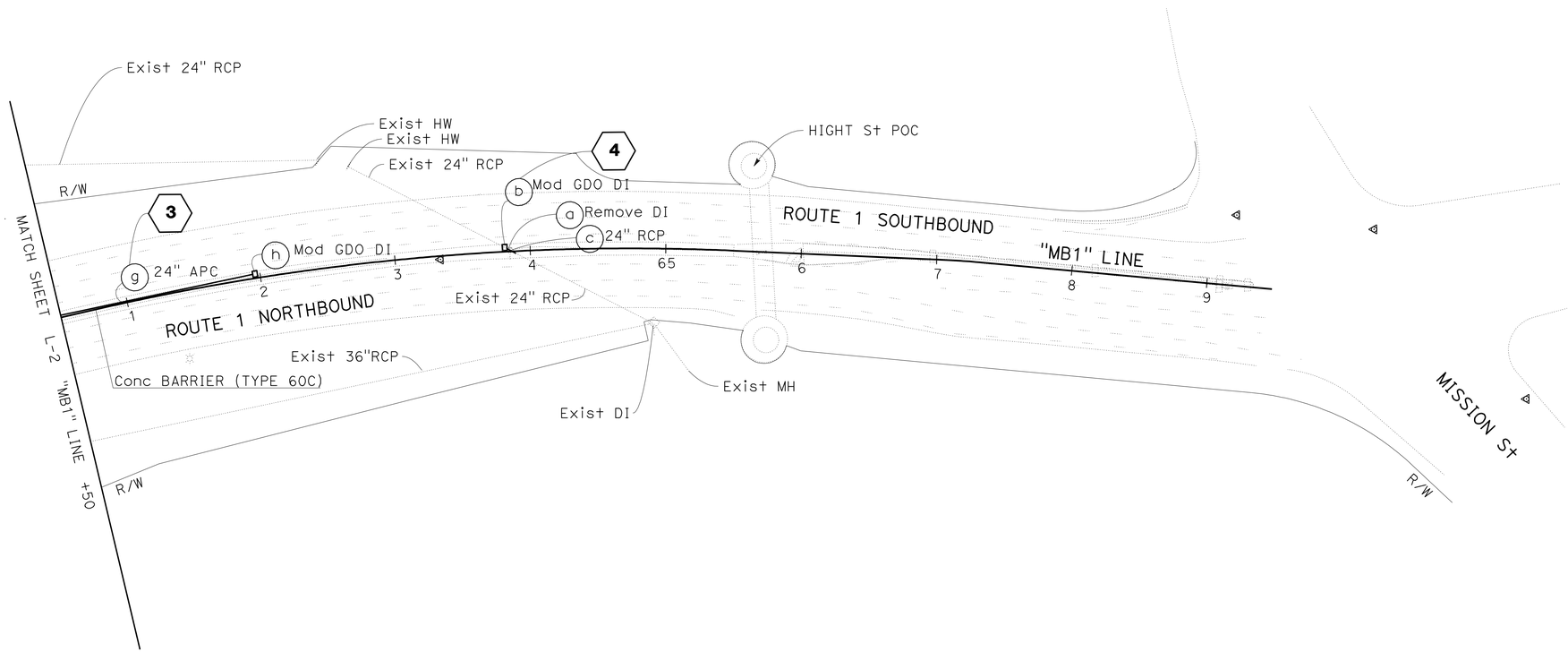

APPROVED FOR DRAINAGE WORK ONLY

DRAINAGE PLAN

SCALE: 1" = 50'

D-3

STATE OF CALIFORNIA - DEPARTMENT OF TRANSPORTATION
Caltrans
06-DESIGN

FUNCTIONAL SUPERVISOR: JIM ESPINOSA
CALCULATED-DESIGNED BY: SAL JARAMILLO
CHECKED BY: PETROS DEMOZ
REVISED BY
DATE REVISED

LAST REVISION 12-24-10
DATE PLOTTED => 31-AUG-2011
TIME PLOTTED => 17:03

Dist	COUNTY	ROUTE	POST MILES TOTAL PROJECT	SHEET No.	TOTAL SHEETS
05	SCr	1	17.7/18.1	18	47

REGISTERED CIVIL ENGINEER 7-18-11 DATE

8-29-11
PLANS APPROVAL DATE

REGISTERED PROFESSIONAL ENGINEER PETROS IYASU DEMOZ No. 61652 Exp 6/30/13 CIVIL STATE OF CALIFORNIA

THE STATE OF CALIFORNIA OR ITS OFFICERS OR AGENTS SHALL NOT BE RESPONSIBLE FOR THE ACCURACY OR COMPLETENESS OF SCANNED COPIES OF THIS PLAN SHEET.

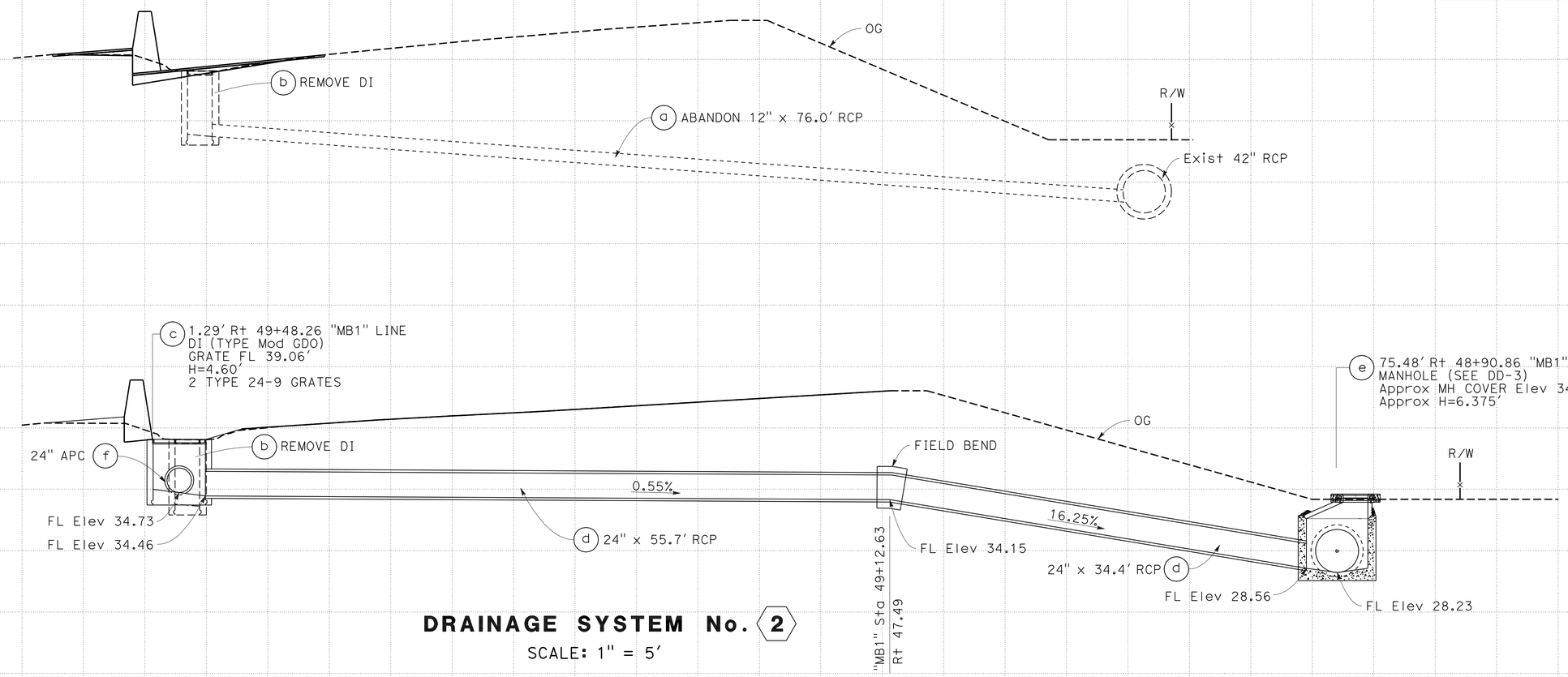

DRAINAGE SYSTEM No. 2
SCALE: 1" = 5'

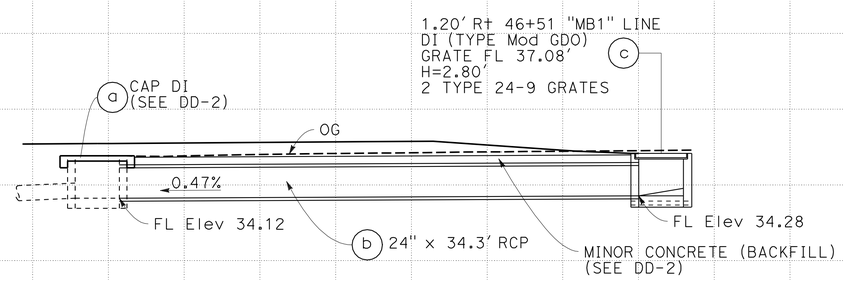

DRAINAGE SYSTEM No. 1
SCALE: 1" = 5'

DRAINAGE PROFILE
SCALE AS SHOWN

DP-1

STATION		TOTAL
CY	Exc	
	Emb	

STATE OF CALIFORNIA - DEPARTMENT OF TRANSPORTATION
Caltrans
06-DESIGN
FUNCTIONAL SUPERVISOR: JIM ESPINOSA
CALCULATED-DESIGNED BY: PETROS DEMOZ
CHECKED BY
REVISED BY
DATE REVISED

LAST REVISION 03-20-11
DATE PLOTTED => 31-AUG-2011
TIME PLOTTED => 17:03

Dist	COUNTY	ROUTE	POST MILES TOTAL PROJECT	SHEET No.	TOTAL SHEETS
05	SCr	1	17.7/18.1	19	47

REGISTERED CIVIL ENGINEER 7-18-11 DATE

8-29-11
PLANS APPROVAL DATE

REGISTERED PROFESSIONAL ENGINEER
PETROS IYASU DEMOZ
No. 61652
Exp 6/30/13
CIVIL
STATE OF CALIFORNIA

THE STATE OF CALIFORNIA OR ITS OFFICERS OR AGENTS SHALL NOT BE RESPONSIBLE FOR THE ACCURACY OR COMPLETENESS OF SCANNED COPIES OF THIS PLAN SHEET.

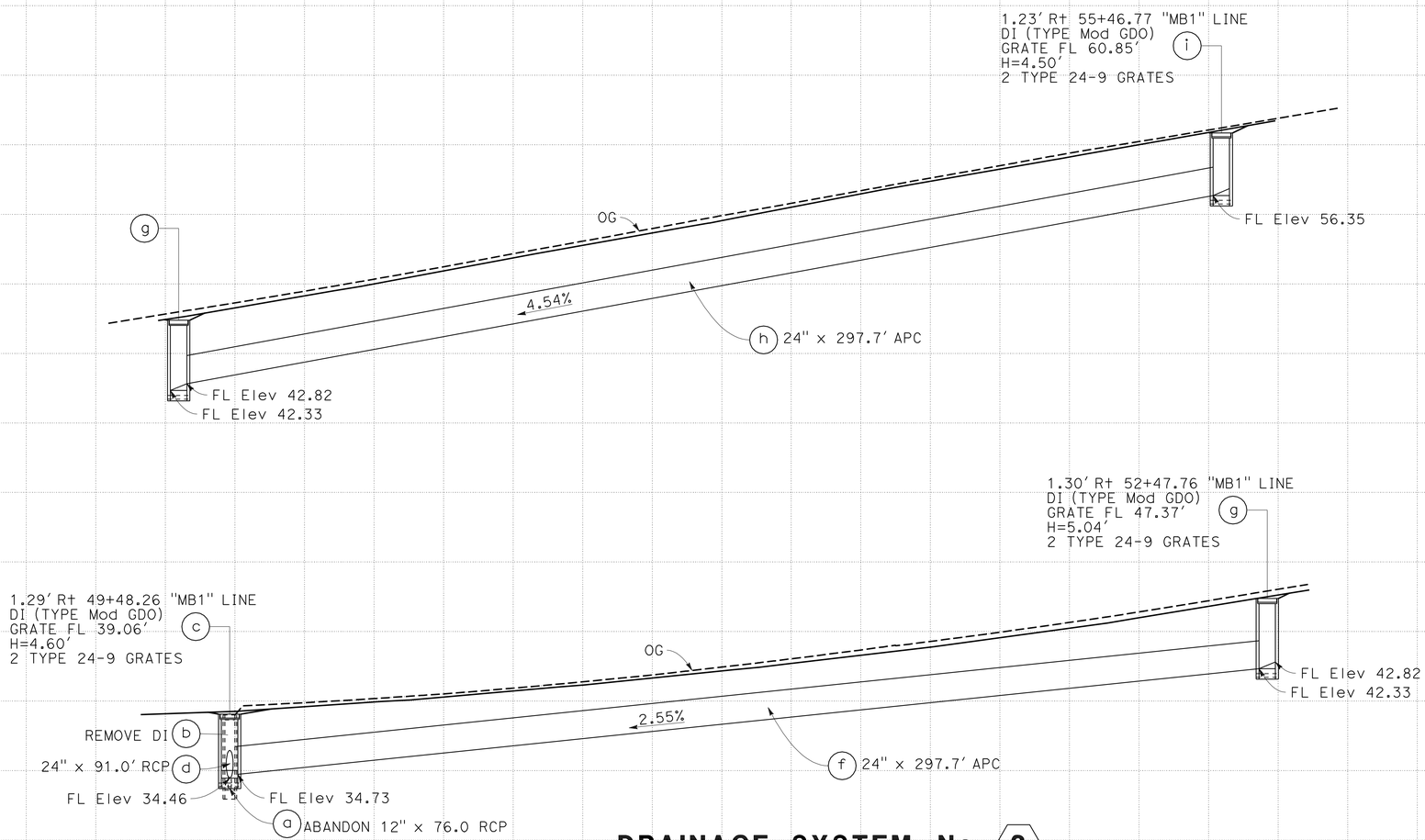

DRAINAGE SYSTEM No. 2

SCALE: Horiz 1" = 20'
Vert 1" = 5'

DRAINAGE PROFILE

SCALE AS SHOWN

DP-2

STATION		TOTAL
CY	Exc	
	Emb	

STATE OF CALIFORNIA - DEPARTMENT OF TRANSPORTATION
Caltrans
06-DESIGN

FUNCTIONAL SUPERVISOR: JIM ESPINOSA
CALCULATED-DESIGNED BY: PETROS DEMOZ
CHECKED BY:
REVISED BY: SAL JARAMILLO
DATE REVISED:

LAST REVISION 03-20-11
DATE PLOTTED => 31-AUG-2011
TIME PLOTTED => 17:03

Dist	COUNTY	ROUTE	POST MILES TOTAL PROJECT	SHEET No.	TOTAL SHEETS
05	SCr	1	17.7/18.1	20	47

REGISTERED CIVIL ENGINEER 7-18-11 DATE

8-29-11
PLANS APPROVAL DATE

REGISTERED PROFESSIONAL ENGINEER PETROS IYASU DEMOZ No. 61652 Exp 6/30/13 CIVIL STATE OF CALIFORNIA

THE STATE OF CALIFORNIA OR ITS OFFICERS OR AGENTS SHALL NOT BE RESPONSIBLE FOR THE ACCURACY OR COMPLETENESS OF SCANNED COPIES OF THIS PLAN SHEET.

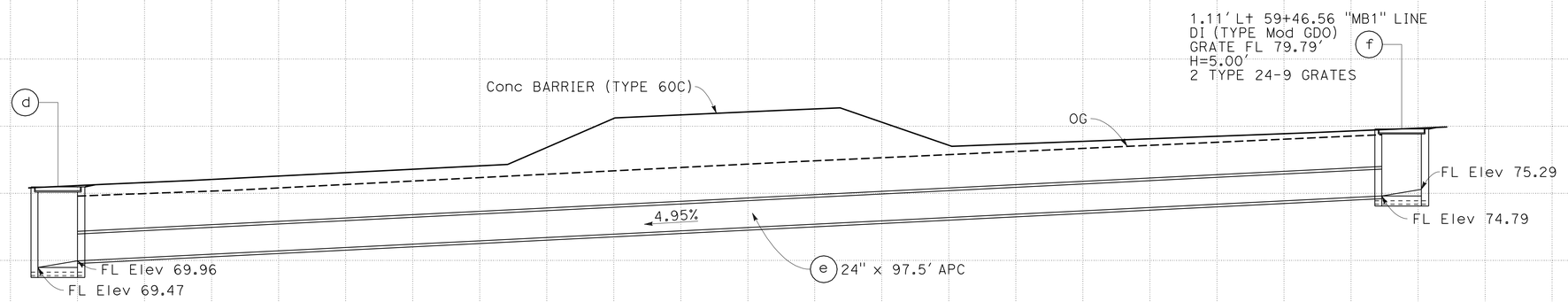

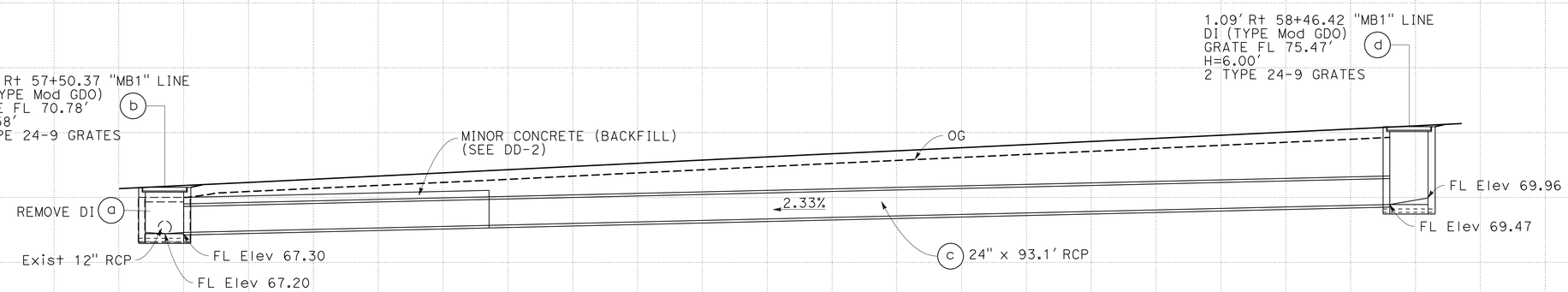

DRAINAGE SYSTEM No. 3

DRAINAGE PROFILE

SCALE: 1" = 5'

DP-3

STATION		TOTAL
CY	Exc	
	Emb	

STATE OF CALIFORNIA - DEPARTMENT OF TRANSPORTATION
06-DESIGN
Caltrans

FUNCTIONAL SUPERVISOR: JIM ESPINOSA
CALCULATED-DESIGNED BY: PETROS DEMOZ
CHECKED BY:
REVISED BY:
DATE REVISED:

LAST REVISION 03-20-11
DATE PLOTTED => 31-AUG-2011
TIME PLOTTED => 17:03

Dist	COUNTY	ROUTE	POST MILES TOTAL PROJECT	SHEET No.	TOTAL SHEETS
05	SCr	1	17.7/18.1	21	47

REGISTERED CIVIL ENGINEER 7-18-11 DATE

8-29-11
PLANS APPROVAL DATE

REGISTERED PROFESSIONAL ENGINEER
PETROS IYASU DEMOZ
No. 61652
Exp 6/30/13
CIVIL
STATE OF CALIFORNIA

THE STATE OF CALIFORNIA OR ITS OFFICERS OR AGENTS SHALL NOT BE RESPONSIBLE FOR THE ACCURACY OR COMPLETENESS OF SCANNED COPIES OF THIS PLAN SHEET.

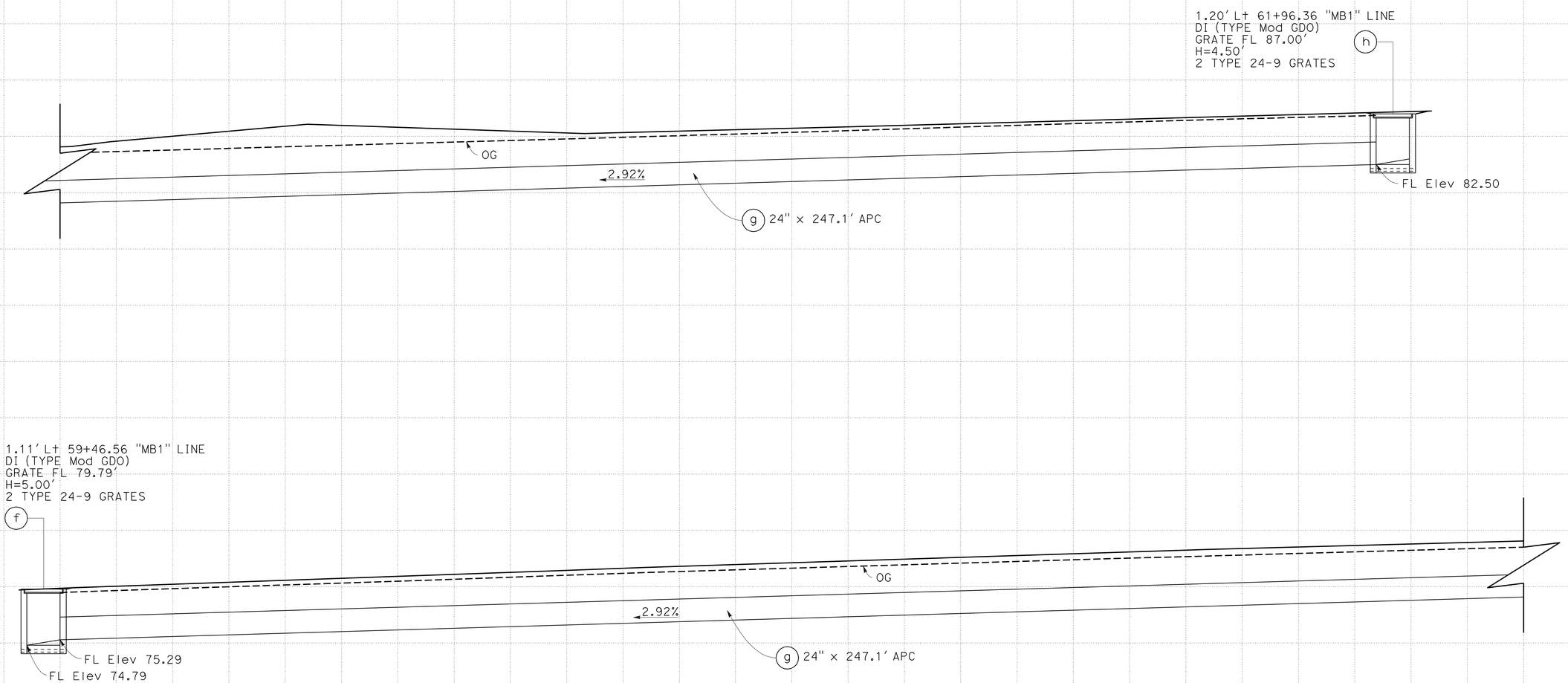

DRAINAGE PROFILE

SCALE: 1" = 5'

DRAINAGE SYSTEM No. 3

DP-4

STATION		TOTAL
CY	Exc	
	Emb	

REVISED BY | DATE REVISED

SAL JARAMILLO | PETROS DEMOZ

CALCULATED-DESIGNED BY | CHECKED BY

FUNCTIONAL SUPERVISOR: JIM ESPINOSA

STATE OF CALIFORNIA - DEPARTMENT OF TRANSPORTATION
06-DESIGN
Caltrans

LAST REVISION 03-20-11 | DATE PLOTTED => 31-AUG-2011 | TIME PLOTTED => 17:03

Dist	COUNTY	ROUTE	POST MILES TOTAL PROJECT	SHEET No.	TOTAL SHEETS
05	SCr	1	17.7/18.1	22	47

REGISTERED CIVIL ENGINEER 7-18-11 DATE

8-29-11
PLANS APPROVAL DATE

REGISTERED PROFESSIONAL ENGINEER PETROS IYASU DEMOZ No. 61652 Exp 6/30/13 CIVIL STATE OF CALIFORNIA

THE STATE OF CALIFORNIA OR ITS OFFICERS OR AGENTS SHALL NOT BE RESPONSIBLE FOR THE ACCURACY OR COMPLETENESS OF SCANNED COPIES OF THIS PLAN SHEET.

NOTES:

1. "H" IS THE DIFFERENCE IN ELEVATION BETWEEN THE OUTLET PIPE FLOW LINE AND THE NORMAL GUTTER GRADE LINE UNDEPRESSED.
2. FOR "T" WALL THICKNESS, USE 6".
3. WALL REINFORCING NOT REQUIRED WHEN "H" IS 8'-0" OR LESS AND THE UNSUPPORTED WIDTH OR LENGTH IS 7'-0" OR LESS. WALLS EXCEEDING THESE LIMITS SHALL BE REINFORCED WITH #4 @ 18"± CENTERS PLACED 1½" CLEAR TO INSIDE OF BOX UNLESS OTHERWISE SHOWN.
4. INLET BOTTOM REINFORCING NOT REQUIRED. SEE STANDARD PLAN D74C FOR ALTERNATIVE REINFORCED BOTTOM.
5. STEPS - NONE REQUIRED WHERE "H" IS LESS THAN 2'-6" WHERE "H" IS 2'-6" OR MORE, INSTALL STEPS WITH LOWEST RUNG 1'-0" ABOVE THE FLOOR AND HIGHEST RUNG NOT MORE THAN 6" BELOW TOP OF INLET. THE DISTANCE BETWEEN STEPS SHALL NOT EXCEED 1'-0" AND SHALL BE UNIFORM THROUGHOUT THE LENGTH OF THE WALL. PLACE STEPS IN THE WALL WITHOUT AN OPENING. STEP INSERTS MAY BE SUBSTITUTED FOR THE BAR STEPS. STEP INSERTS SHALL COMPLY WITH STATE INDUSTRIAL SAFETY REQUIREMENTS. SEE STANDARD PLAN D74C FOR STEP DETAILS.
6. PIPE(S) CAN BE PLACED IN ANY WALL.
7. BASIN FLOORS SHALL HAVE WOOD TROWEL FINISH AND SHALL SLOPE TOWARD THE OUTLET PIPE AS SHOWN.
8. GALVANIZING - SEE STANDARD SPECIFICATIONS OR SPECIAL PROVISIONS.
9. SEE TABLE BELOW FOR GRATE TYPE AND WEIGHT OF MISCELLANEOUS IRON AND STEEL. FOR OTHER DETAILS ON GRATE, SEE STANDARD PLAN D77A.
10. SEE STANDARD PLAN D78A FOR GUTTER DEPRESSION DETAILS.
11. FULL PENETRATION BUTT WELDS MAY BE SUBSTITUTED FOR THE FILLET WELDS ON ALL ANCHORS.
12. STANDARD SQUARE, HEXAGON, ROUND OR EQUIVALENT HEADED ANCHORS MAY BE SUBSTITUTED FOR THE RIGHT ANGLE HOOKS ON THE ANCHORS SHOWN ON THIS PLAN.
13. CAST-IN-PLACE OR PRECAST ALTERNATIVE IS OPTIONAL WITH CONTRACTOR. SEE STANDARD SPECIFICATIONS.
14. CAST-IN-PLACE INLETS TO BE FORMED AROUND ALL PIPES/STUBS INTERSECTING THE INLET AND CONCRETE POURED IN ONE CONTINUOUS OPERATION. PRECAST INLETS SHALL HAVE MORTARED PIPE CONNECTIONS CONFORMING TO DETAILS FOR TYPE GCP INLETS ON STANDARD PLAN D75B. SEE STANDARD SPECIFICATIONS FOR MORTAR COMPOSITION.

MISCELLANEOUS IRON & STEEL

INLET TYPE	GRATE TYPE	MASS(LB)
Mod GDO	24 - 9	526

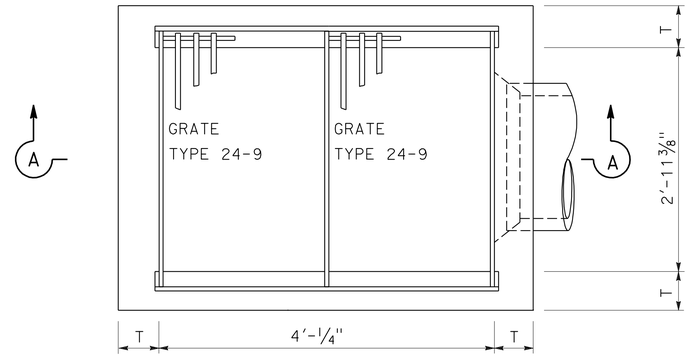

MODIFIED GDO INLET

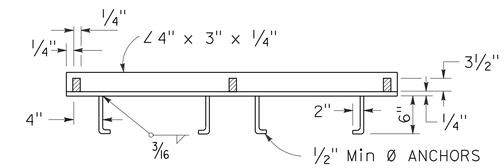

CROSS SECTION

(THRU FRAME)

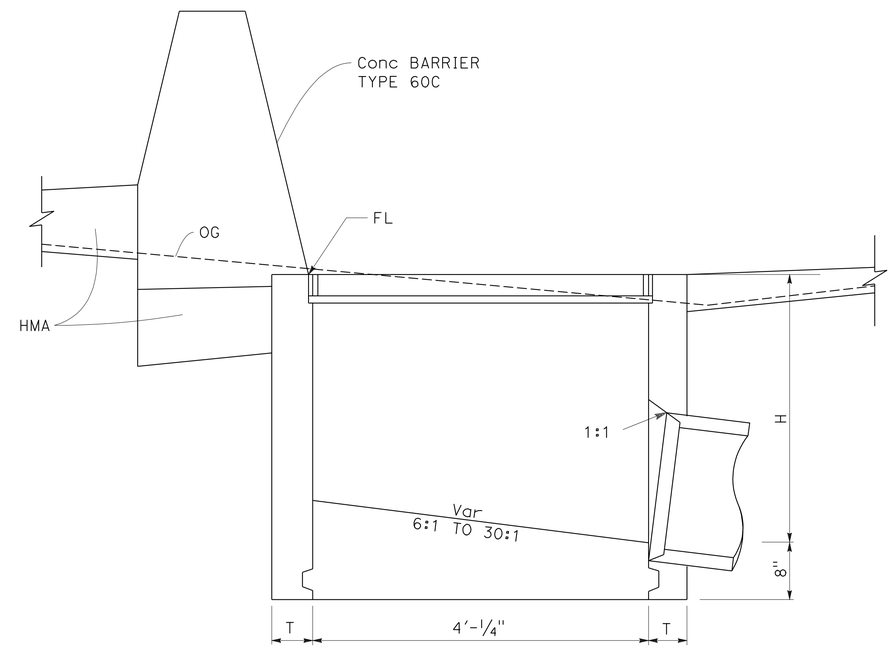

SECTION A-A

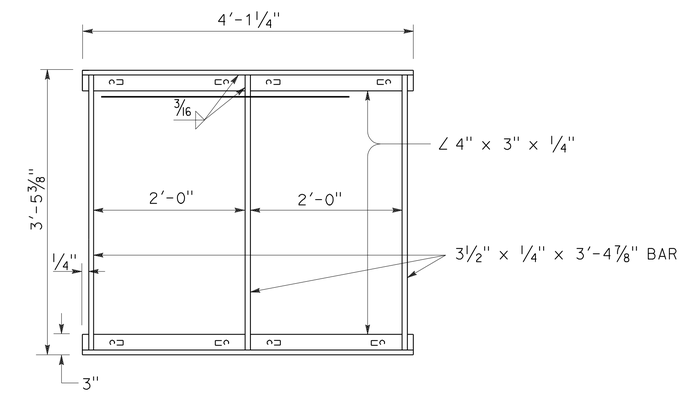

MODIFIED GDO FRAME

DRAINAGE DETAILS

NO SCALE

DD-1

STATE OF CALIFORNIA - DEPARTMENT OF TRANSPORTATION
Caltrans®
06-DESIGN

FUNCTIONAL SUPERVISOR: JIM ESPINOSA
CALCULATED-DESIGNED BY: SAL JARAMILLO
CHECKED BY: PETROS DEMOZ
REVISED BY
DATE REVISED

LAST REVISION 12-24-10
DATE PLOTTED => 31-AUG-2011
TIME PLOTTED => 17:03

Dist	COUNTY	ROUTE	POST MILES TOTAL PROJECT	SHEET No.	TOTAL SHEETS
05	SCr	1	17.7/18.1	23	47

REGISTERED CIVIL ENGINEER 7-18-11 DATE

8-29-11
PLANS APPROVAL DATE

REGISTERED PROFESSIONAL ENGINEER PETROS IYASU DEMOZ No. 61652 Exp 6/30/13 CIVIL STATE OF CALIFORNIA

THE STATE OF CALIFORNIA OR ITS OFFICERS OR AGENTS SHALL NOT BE RESPONSIBLE FOR THE ACCURACY OR COMPLETENESS OF SCANNED COPIES OF THIS PLAN SHEET.

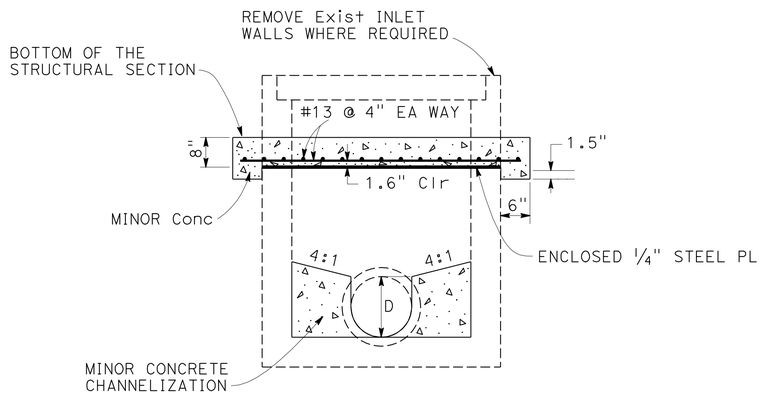

CAP INLET (TYPICAL)

SECTION B-B

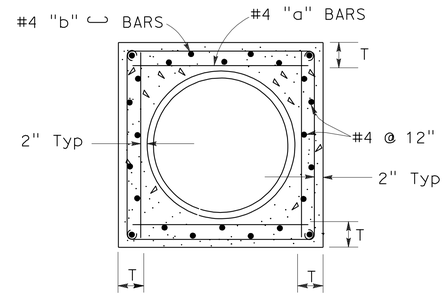

SECTION C-C

NOTES:

1. WHERE PIPE OF DIFFERENT DIAMETERS ARE JOINED WITH A CONCRETE COLLAR, "L" SHALL BE THAT OF THE LARGER PIPE, D1 OR D2 WHICHEVER IS GREATER.
2. JOIN PIPES AT INVERTS WHERE THE GRADIENT OF THE PIPE DOWNSTREAMS, AND JOIN PIPES AT SOFFIT WHERE THE GRADIENT OF THE UPSTREAM PIPE IS GREATER THAN THE GRADIENT OF THE DOWNSTREAM PIPE.
3. "b" BARS TO BE LOCKED AROUND LONGITUDUNAL REINFORCEMENT. ROTATE BARS AS NECESSARY.
4. CONCRETE COLLAR SHOWN IS ADEQUATE FOR UP TO 40 FEET OF EMBANKMENT COVER.
5. FOR PIPE SIZE NOT LISTED, USE NEXT LARGER.

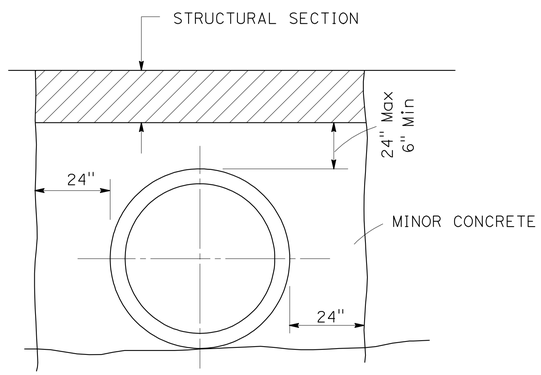

MINOR CONCRETE (BACKFILL)

SECTION A-A

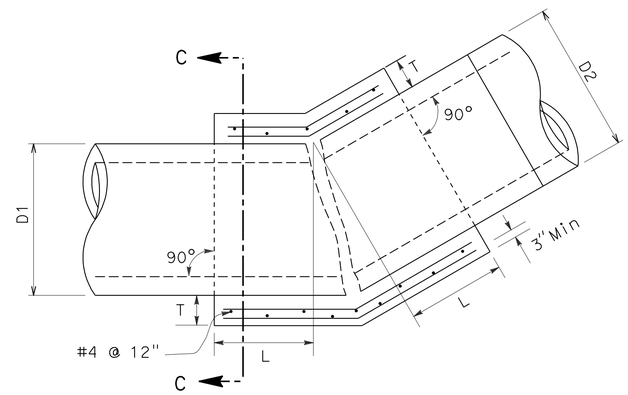

TYPICAL CONCRETE COLLAR AT ANGLE POINT

D	L	T	"a"	"b"
12"	1.0′	4"	@12"	
18"	1.0′	5"	@12"	
24"	1.0′	6"	@12"	
36"	1.5′	10"	@12"	
42"	1.5′	10"	@12"	
48"	1.5′	10"	@12"	
60"	1.75′	11"	@12"	
72"	2.0′	12"	@6"	@6"

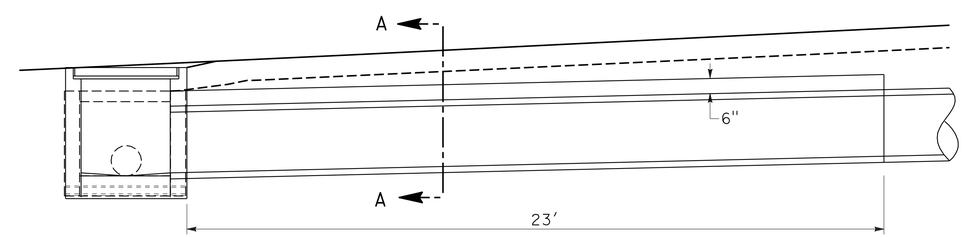

DRAINAGE SYSTEM No. 3

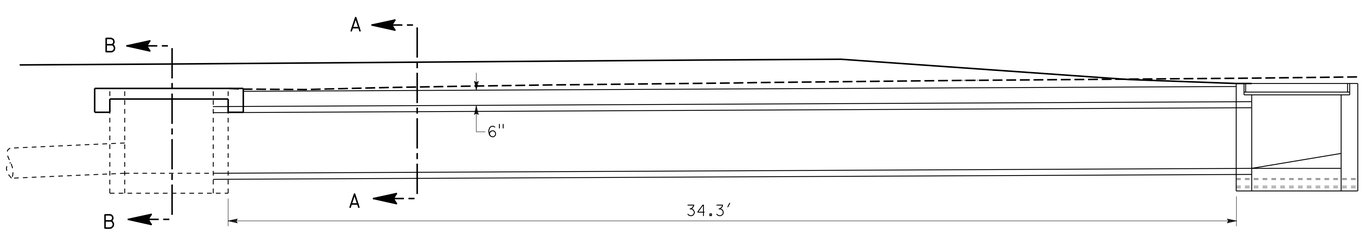

DRAINAGE SYSTEM No. 1

DRAINAGE DETAILS

NO SCALE

DD-2

STATE OF CALIFORNIA - DEPARTMENT OF TRANSPORTATION
06-DESIGN
Caltrans

FUNCTIONAL SUPERVISOR: JIM ESPINOSA
CALCULATED-DESIGNED BY: SAL JARAMILLO
CHECKED BY: PETROS DEMOZ
REVISED BY
DATE REVISED

LAST REVISION 12-24-10
DATE PLOTTED => 31-AUG-2011
TIME PLOTTED => 17:03

Dist	COUNTY	ROUTE	POST MILES TOTAL PROJECT	SHEET No.	TOTAL SHEETS
05	SCr	1	17.7/18.1	24	47

REGISTERED CIVIL ENGINEER 7-18-11 DATE

8-29-11
PLANS APPROVAL DATE

REGISTERED PROFESSIONAL ENGINEER PETROS IYASU DEMOZ No. 61652 Exp 6/30/13 CIVIL STATE OF CALIFORNIA

THE STATE OF CALIFORNIA OR ITS OFFICERS OR AGENTS SHALL NOT BE RESPONSIBLE FOR THE ACCURACY OR COMPLETENESS OF SCANNED COPIES OF THIS PLAN SHEET.

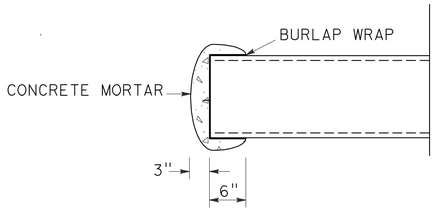

PIPE PLUG

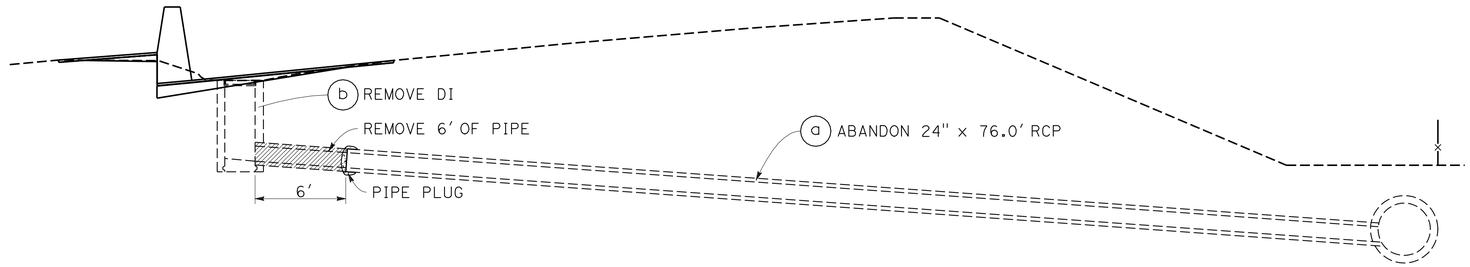

DRAINAGE SYSTEM No. 2

NOTES:

1. MANHOLE BASE SHALL BE IN PLACE OR PRECAST REINFORCED CONCRETE.
2. MANHOLE BASE SHALL BE CAST OR PLACED AGAINST 12" CRUSHED STONE.
3. MANHOLE COVER SHALL BEAR THE LETTER "D" IT IS A STORM DRAIN STRUCTURE.
4. COVER SHALL BE SUPPLIED WITH BOLT DOWN OR LOCKING DEVICES.
5. ALL JOINTS BETWEEN PRECAST SECTIONS SHALL BE MORTARED.
6. INTERIOR OR THE MANHOLE SHALL HAVE A SMOOTH TROWELLED SURFACE.

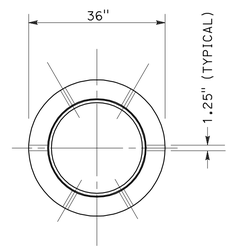

PLAN OF FRAME

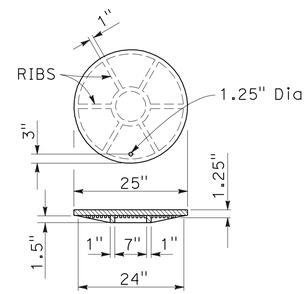

COVER

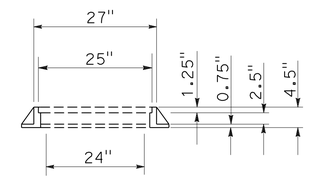

SECTION OF FRAME

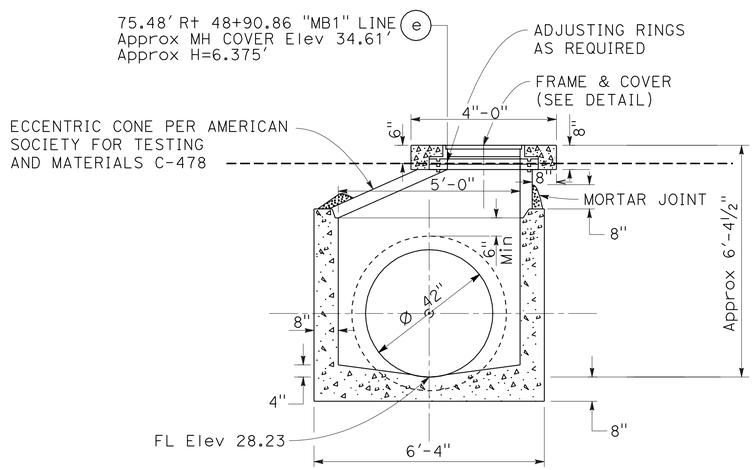

SECTION A-A

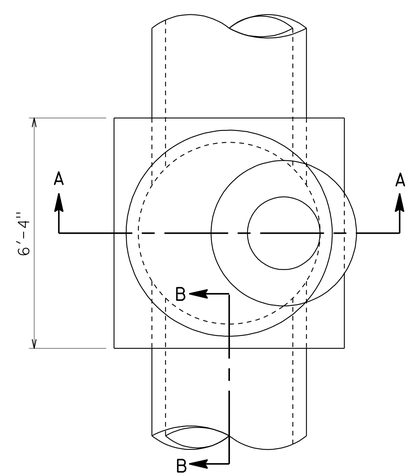

PLAN

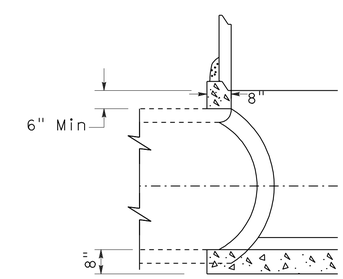

SECTION B-B

DRAINAGE DETAILS

NO SCALE

DD-3

STATE OF CALIFORNIA - DEPARTMENT OF TRANSPORTATION
Caltrans
06-DESIGN

FUNCTIONAL SUPERVISOR: JIM ESPINOSA
CALCULATED-DESIGNED BY: SAL JARAMILLO
CHECKED BY: PETROS DEMOZ
REVISED BY
DATE REVISED

LAST REVISION 12-24-10
DATE PLOTTED => 31-AUG-2011
TIME PLOTTED => 17:03

Dist	COUNTY	ROUTE	POST MILES TOTAL PROJECT	SHEET No.	TOTAL SHEETS
05	SCr	1	17.7/18.1	25	47

REGISTERED CIVIL ENGINEER 7-18-11 DATE

8-29-11
PLANS APPROVAL DATE

REGISTERED PROFESSIONAL ENGINEER PETROS IYASU DEMOZ No. 61652 Exp 6/30/13 CIVIL STATE OF CALIFORNIA

THE STATE OF CALIFORNIA OR ITS OFFICERS OR AGENTS SHALL NOT BE RESPONSIBLE FOR THE ACCURACY OR COMPLETENESS OF SCANNED COPIES OF THIS PLAN SHEET.

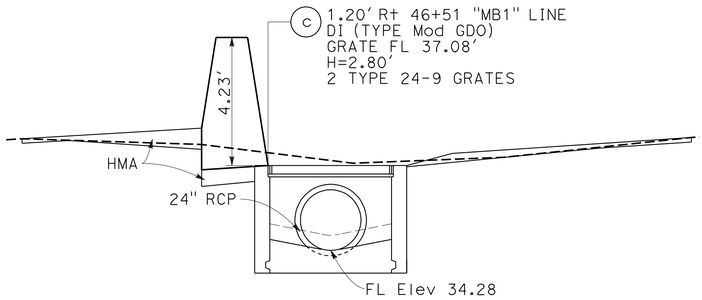

DRAINAGE SYSTEM No. 1 c
46+51

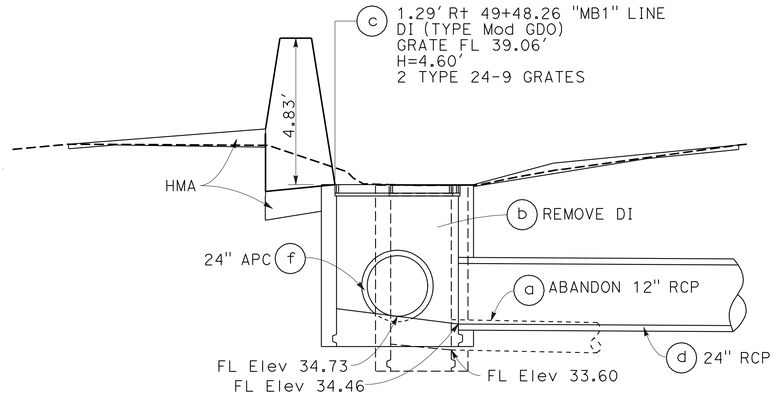

DRAINAGE SYSTEM No. 2 c
49+48.26

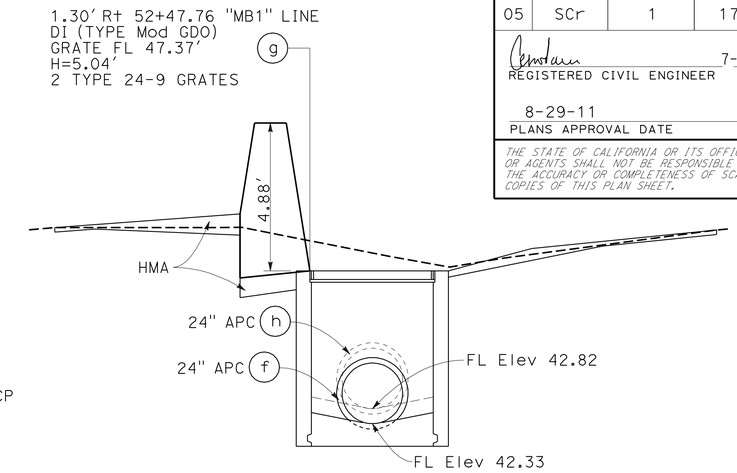

DRAINAGE SYSTEM No. 2 g
52+47.76

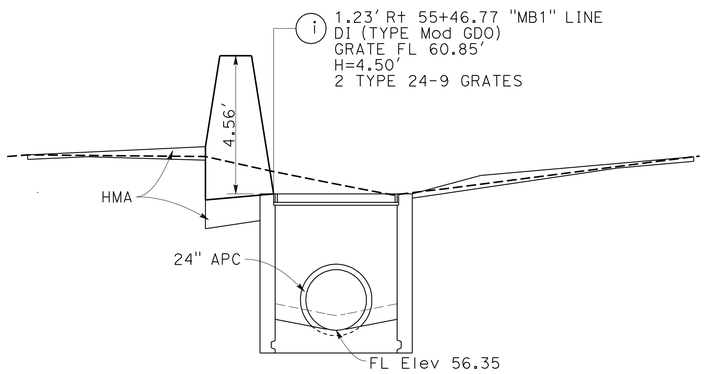

DRAINAGE SYSTEM No. 2 i
55+46.77

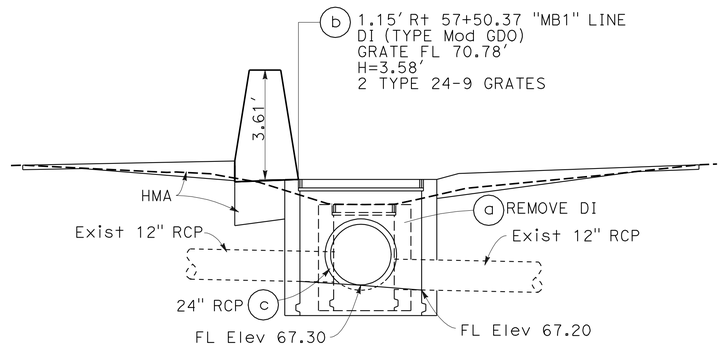

DRAINAGE SYSTEM No. 3 b
57+50.37

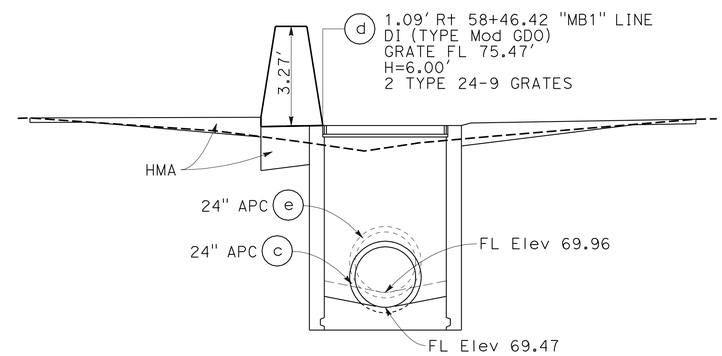

DRAINAGE SYSTEM No. 3 d
58+46.42

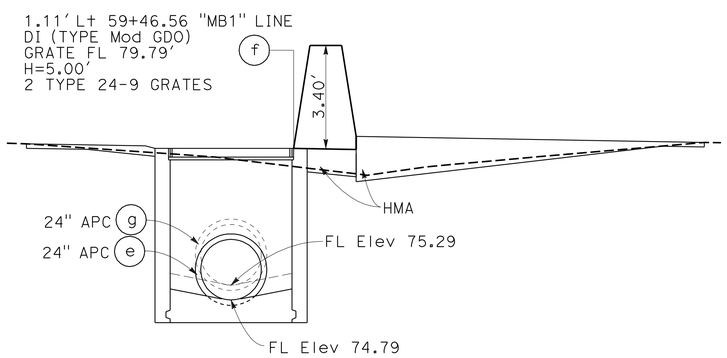

DRAINAGE SYSTEM No. 3 f
59+46.56

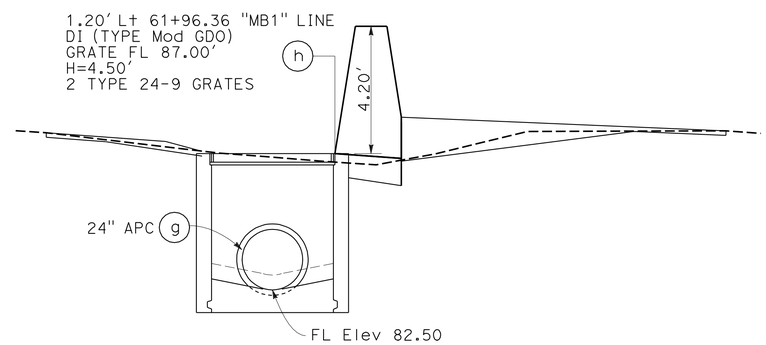

DRAINAGE SYSTEM No. 3 h
61+96.36

DRAINAGE DETAILS

NO SCALE

DD-4

STATE OF CALIFORNIA - DEPARTMENT OF TRANSPORTATION
Caltrans®
06-DESIGN

FUNCTIONAL SUPERVISOR: JIM ESPINOSA
CALCULATED-DESIGNED BY: PETROS DEMOZ
CHECKED BY
REVISED BY
DATE REVISED

LAST REVISION 05-31-11
DATE PLOTTED => 31-AUG-2011
TIME PLOTTED => 17:03

Dist	COUNTY	ROUTE	POST MILES TOTAL PROJECT	SHEET No.	TOTAL SHEETS
05	SCr	1	17.7/18.1	26	47

REGISTERED CIVIL ENGINEER 7-18-11 DATE

8-29-11
PLANS APPROVAL DATE

REGISTERED PROFESSIONAL ENGINEER
PETROS IYASU DEMOZ
No. 61652
Exp 6/30/13
CIVIL
STATE OF CALIFORNIA

THE STATE OF CALIFORNIA OR ITS OFFICERS OR AGENTS SHALL NOT BE RESPONSIBLE FOR THE ACCURACY OR COMPLETENESS OF SCANNED COPIES OF THIS PLAN SHEET.

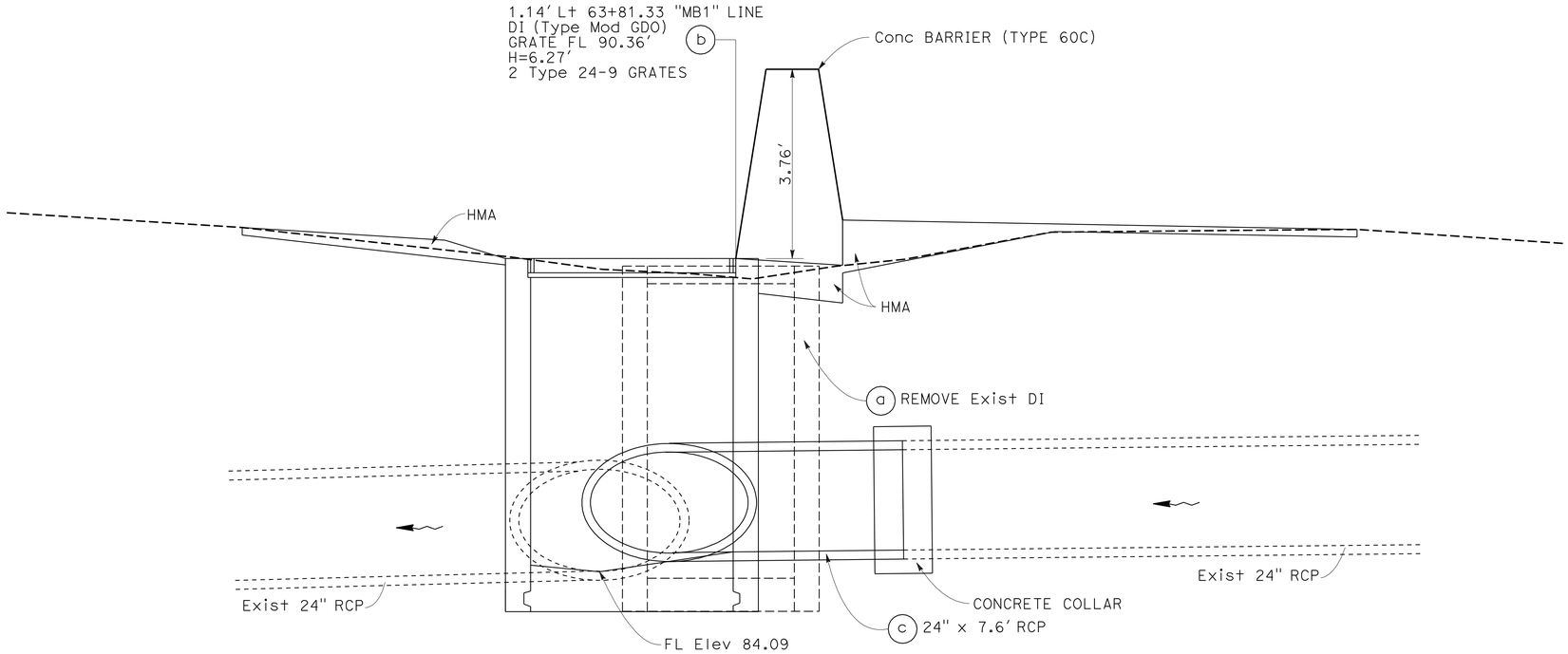

SECTION A-A

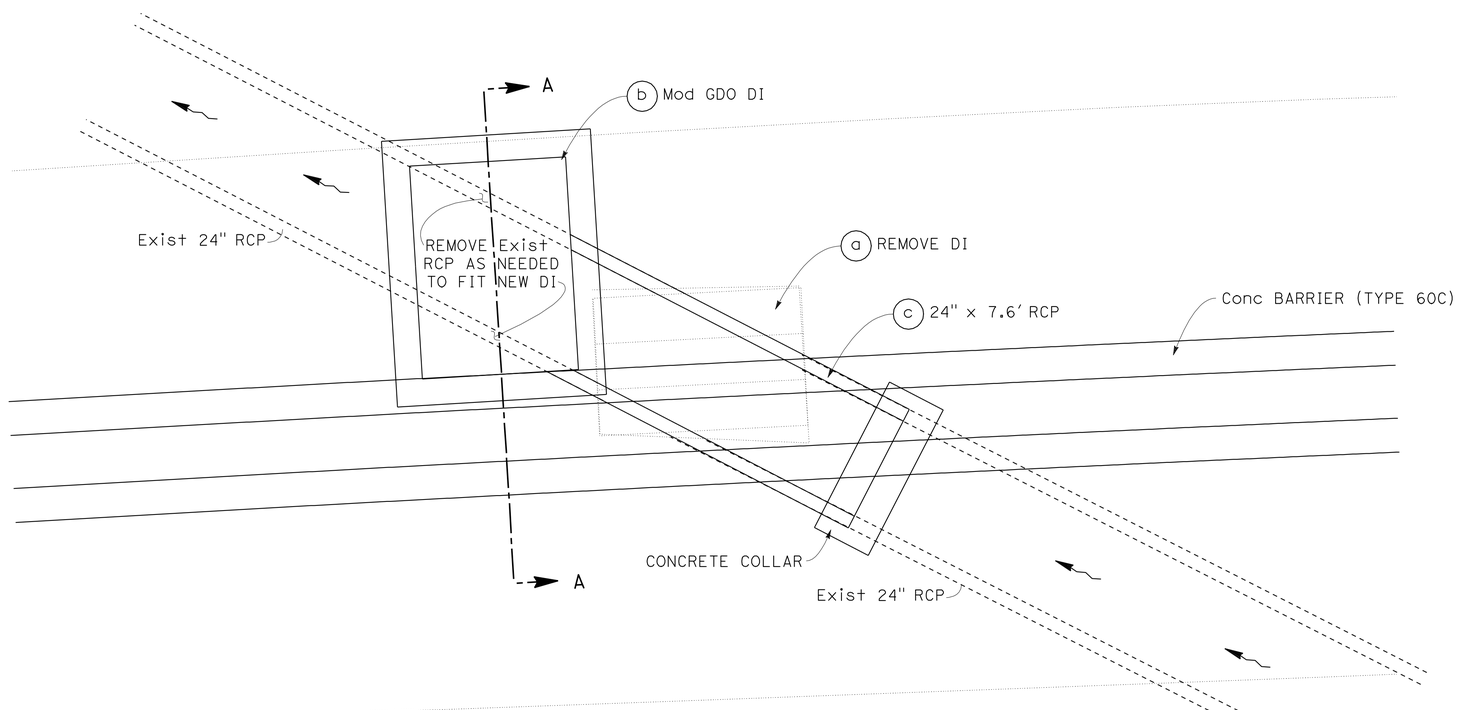

DRAINAGE SYSTEM No. 4 a b c
63+81.33

DRAINAGE DETAILS

NO SCALE **DD-5**

STATE OF CALIFORNIA - DEPARTMENT OF TRANSPORTATION
Caltrans
06-DESIGN

FUNCTIONAL SUPERVISOR: JIM ESPINOSA
CALCULATED-DESIGNED BY: PETROS DEMOZ
CHECKED BY
REVISED BY
DATE REVISED

LAST REVISION 12-24-10 | DATE PLOTTED => 31-AUG-2011 | TIME PLOTTED => 16:08

Dist	COUNTY	ROUTE	POST MILES TOTAL PROJECT	SHEET No.	TOTAL SHEETS
05	SCr	1	17.7/18.1	27	47

REGISTERED CIVIL ENGINEER 7-18-11 DATE

8-29-11
PLANS APPROVAL DATE

REGISTERED PROFESSIONAL ENGINEER PETROS IYASU DEMOZ No. 61652 Exp 6/30/13 CIVIL STATE OF CALIFORNIA

THE STATE OF CALIFORNIA OR ITS OFFICERS OR AGENTS SHALL NOT BE RESPONSIBLE FOR THE ACCURACY OR COMPLETENESS OF SCANNED COPIES OF THIS PLAN SHEET.

ALTERNATIVE PIPE CULVERTS		
ALLOWABLE PIPE MATERIAL		
DESIGNATION	RCP	PLASTIC
	SIZE (Inch)	SIZE (Inch)
24" APC	24	24

NOTE:
1. ALL PIPE JOINTS SHALL CONFORM TO REQUIREMENTS FOR STANDARD JOINTS.

DRAINAGE QUANTITIES

DRAINAGE PLAN SHEET No.	DRAINAGE SYSTEM No. ⬡	DRAINAGE UNIT No. ○	FRAME AND GRATE (N) EA	MISCELLANEOUS IRON AND STEEL LB	MINOR CONCRETE (MINOR STRUCTURE) CY	HEIGHT OF INLET (H) (N) LF	MAXIMUM COVER (N) LF	CONCRETE COLLAR (N) EA	ABANDON CULVERT LF	MANHOLE FRAME AND COVER EA	CAP INLET EA	REMOVE INLET EA	24" RCP LF	24" APC LF	MINOR CONCRETE (BACKFILL) CY	DESCRIPTION	STATION	DRAINAGE PLAN SHEET No.	DRAINAGE SYSTEM No. ⬡	DRAINAGE UNIT No. ○
D-1	1	a									1					CAP INLET	Sta 46+14.69	D-1	1	a
		b					1						34.3		19	24" RCP, MINOR CONCRETE (BACKFILL)				b
		c	2	526	1.62	2.8										TYPE Mod GDO DI, GRATE TYPE 24-9	Sta 46+51.00			c
D-2	2	a							76							ABANDON 12" RCP	Sta 49+48.56	D-2	2	a
		b										1				REMOVE DI	Sta 49+48.56			b
		c	2	526	2.14	4.60										TYPE Mod GDO DI, GRATE TYPE 24-9	Sta 49+48.56			c
		d					2	1					90.1			24" RCP, Conc COLLAR				d
		e				6.38				1						MANHOLE FRAME AND COVER	Sta 48+90.86			e
		f					2							297.7		24" APC				f
		g	2	526	2.28	5.04										TYPE Mod GDO DI, GRATE TYPE 24-9	Sta 52+47.76			g
		h					2							297.7		24" APC				h
		i	2	526	2.10	4.50										TYPE Mod GDO DI, GRATE TYPE 24-9	Sta 55+46.77			i
D-2 D-3	3	a										1				REMOVE DI	Sta 57+50.37	D-2 D-3	3	a
		b	2	526	1.81	3.58										TYPE Mod GDO DI, GRATE TYPE 24-9	Sta 57+50.37			b
		c					2						93.1		13	24" RCP, MINOR CONCRETE (BACKFILL)				c
		d	2	526	2.59	6.00										TYPE Mod GDO DI, GRATE TYPE 24-9	Sta 58+46.42			d
		e					2							97.5		24" APC				e
		f	2	526	2.26	5.00										TYPE Mod GDO DI, GRATE TYPE 24-9	Sta 59+46.56			f
		g					2							247.1		24" APC				g
		h	2	526	2.10	4.50										TYPE Mod GDO DI, GRATE TYPE 24-9	Sta 61+96.36			h
D-3	4	a										1				REMOVE DI		D-3	4	a
		b	2	526	2.67	6.27										TYPE Mod GDO DI, GRATE TYPE 24-9	Sta 63+81.33			b
		c						1					7.6			24" RCP, CONCRETE COLLAR				c
TOTAL				4734	19.57				76	1	1	3	225.1	940	32					

(N) NOT A SEPARATE PAY ITEM, FOR INFORMATION ONLY.

DRAINAGE QUANTITIES
DQ-1

STATE OF CALIFORNIA - DEPARTMENT OF TRANSPORTATION
Caltrans 06-DESIGN

FUNCTIONAL SUPERVISOR: JIM ESPINOSA
CALCULATED-DESIGNED BY: SAL JARAMILLO
CHECKED BY: PETROS DEMOZ
REVISED BY
DATE REVISED

LAST REVISION 03-23-11
DATE PLOTTED => 31-AUG-2011
TIME PLOTTED => 16:08

Dist	COUNTY	ROUTE	POST MILES TOTAL PROJECT	SHEET No.	TOTAL SHEETS
05	SCr	1	17.7/18.1	28	47

REGISTERED CIVIL ENGINEER 7-18-11 DATE

8-29-11
PLANS APPROVAL DATE

REGISTERED PROFESSIONAL ENGINEER
PETROS IYASU DEMOZ
No. 61652
Exp 6/30/13
CIVIL
STATE OF CALIFORNIA

THE STATE OF CALIFORNIA OR ITS OFFICERS OR AGENTS SHALL NOT BE RESPONSIBLE FOR THE ACCURACY OR COMPLETENESS OF SCANNED COPIES OF THIS PLAN SHEET.

NOTE:

FOR ACCURATE RIGHT OF WAY DATA, CONTACT
RIGHT OF WAY ENGINEERING AT THE DISTRICT OFFICE.

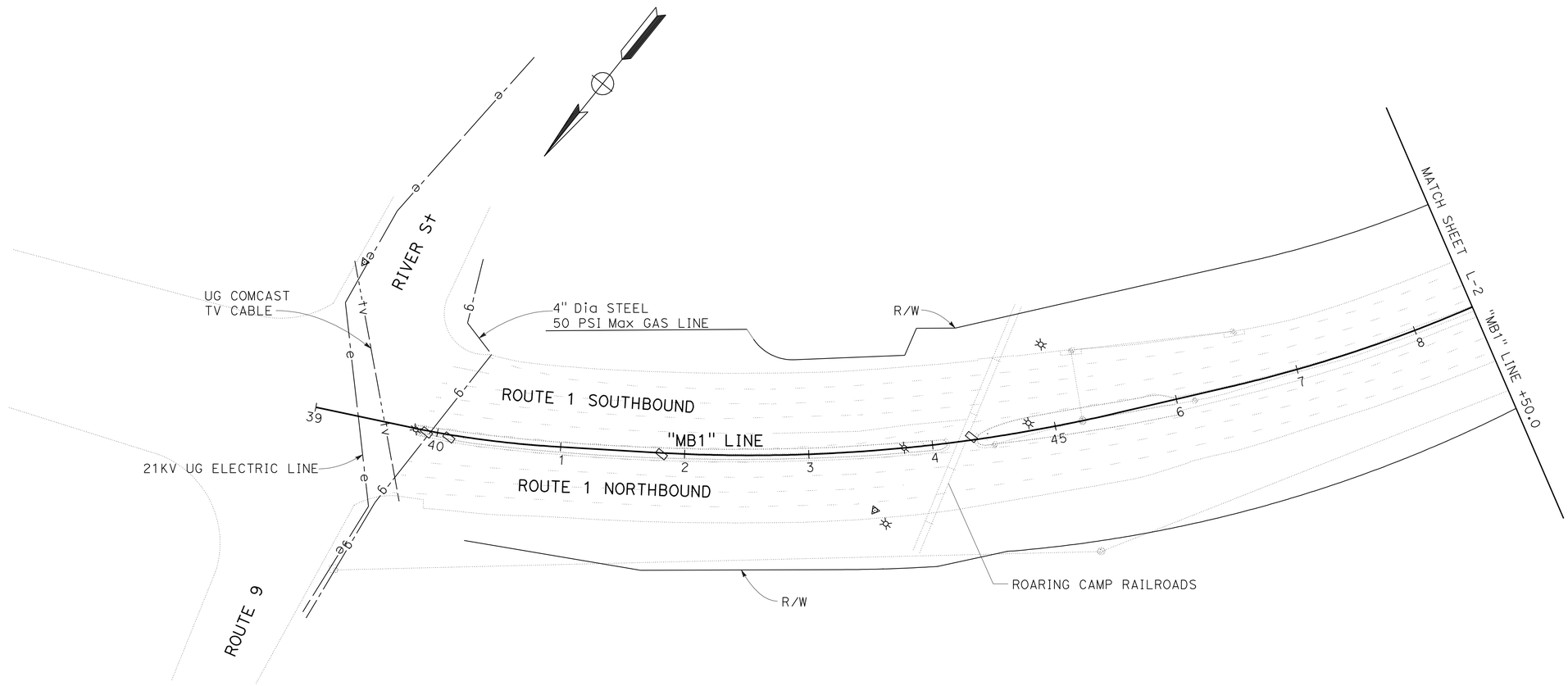

UTILITY PLAN

SCALE: 1" = 50'

U-1

APPROVED FOR UTILITY INFORMATION ONLY

STATE OF CALIFORNIA - DEPARTMENT OF TRANSPORTATION
Caltrans
06-DESIGN

FUNCTIONAL SUPERVISOR: JIM ESPINOSA

CALCULATED-DESIGNED BY: PETROS DEMOZ
CHECKED BY: JIM ESPINOSA

REVISED BY
DATE REVISED

LAST REVISION 12-24-10
DATE PLOTTED => 31-AUG-2011
TIME PLOTTED => 16:08

Dist	COUNTY	ROUTE	POST MILES TOTAL PROJECT	SHEET No.	TOTAL SHEETS
05	SCr	1	17.7/18.1	29	47

REGISTERED CIVIL ENGINEER 7-18-11 DATE

8-29-11
PLANS APPROVAL DATE

REGISTERED PROFESSIONAL ENGINEER
PETROS IYASU DEMOZ
No. 61652
Exp 6/30/13
CIVIL
STATE OF CALIFORNIA

THE STATE OF CALIFORNIA OR ITS OFFICERS OR AGENTS SHALL NOT BE RESPONSIBLE FOR THE ACCURACY OR COMPLETENESS OF SCANNED COPIES OF THIS PLAN SHEET.

NOTE:

FOR ACCURATE RIGHT OF WAY DATA, CONTACT
RIGHT OF WAY ENGINEERING AT THE DISTRICT OFFICE.

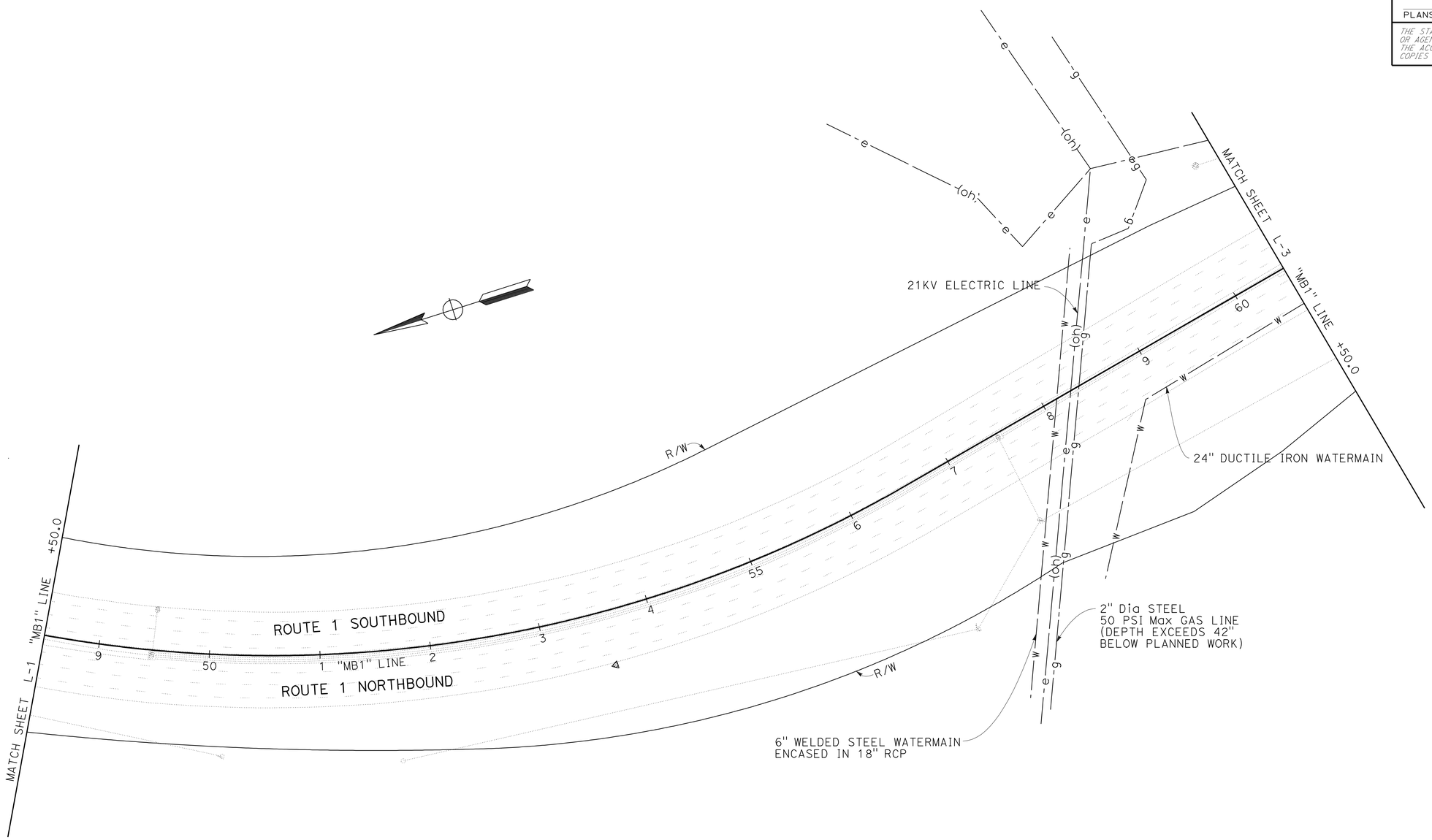

UTILITY PLAN

SCALE: 1" = 50'

U-2

APPROVED FOR UTILITY INFORMATION ONLY

STATE OF CALIFORNIA - DEPARTMENT OF TRANSPORTATION
Caltrans
06-DESIGN

FUNCTIONAL SUPERVISOR: JIM ESPINOSA
CALCULATED-DESIGNED BY: PETROS DEMOZ
CHECKED BY: JIM ESPINOSA
REVISED BY
DATE REVISED

LAST REVISION 12-24-10
DATE PLOTTED => 31-AUG-2011
TIME PLOTTED => 16:08

Dist	COUNTY	ROUTE	POST MILES TOTAL PROJECT	SHEET No.	TOTAL SHEETS
05	SCr	1	17.7/18.1	30	47

REGISTERED CIVIL ENGINEER 7-18-11 DATE

8-29-11
PLANS APPROVAL DATE

REGISTERED PROFESSIONAL ENGINEER
PETROS IYASU DEMOZ
No. 61652
Exp 6/30/13
CIVIL
STATE OF CALIFORNIA

THE STATE OF CALIFORNIA OR ITS OFFICERS OR AGENTS SHALL NOT BE RESPONSIBLE FOR THE ACCURACY OR COMPLETENESS OF SCANNED COPIES OF THIS PLAN SHEET.

NOTE:

FOR ACCURATE RIGHT OF WAY DATA, CONTACT
RIGHT OF WAY ENGINEERING AT THE DISTRICT OFFICE.

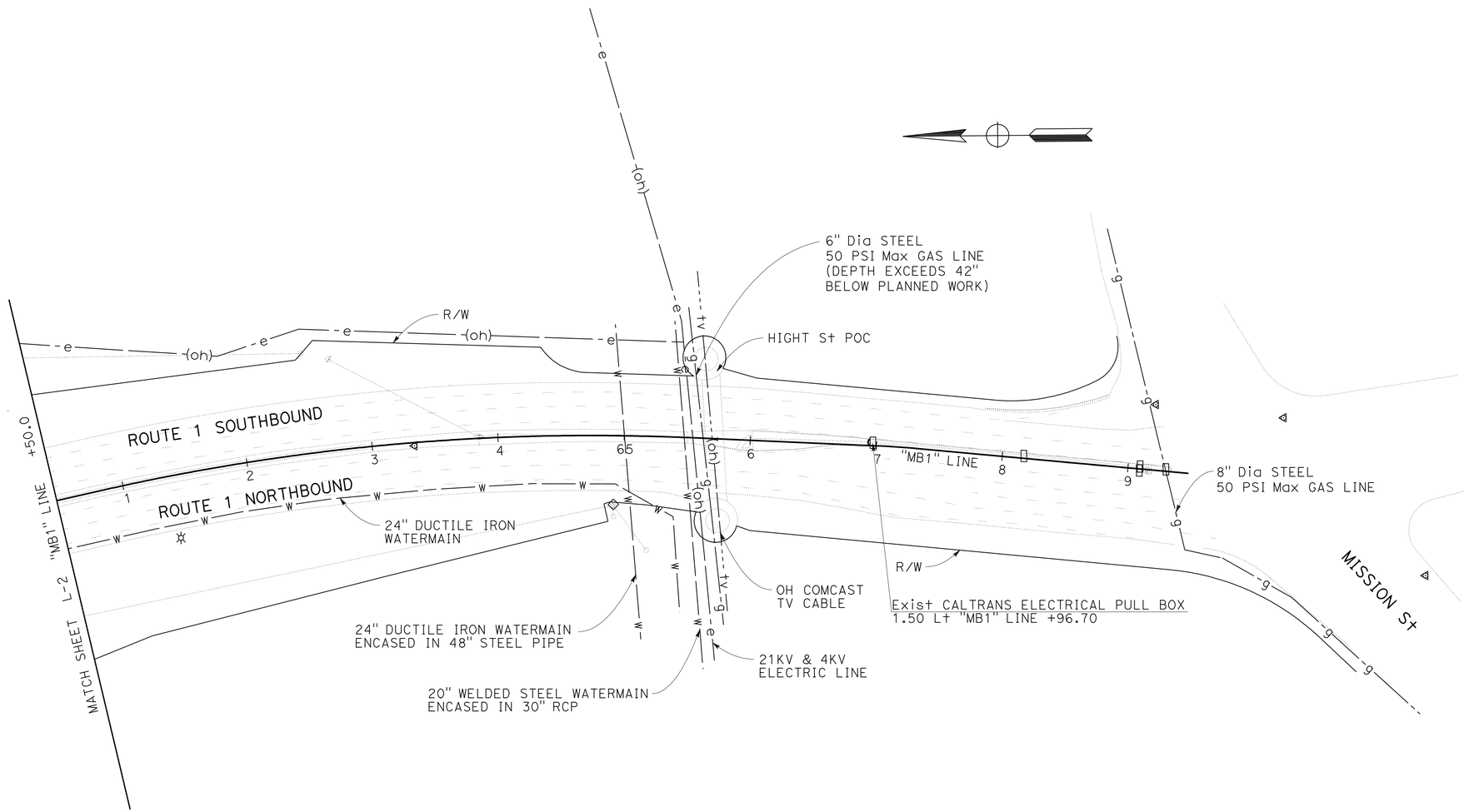

APPROVED FOR UTILITY INFORMATION ONLY

UTILITY PLAN

SCALE: 1" = 50' **U-3**

STATE OF CALIFORNIA - DEPARTMENT OF TRANSPORTATION
Caltrans
06-DESIGN

FUNCTIONAL SUPERVISOR: JIM ESPINOSA
CALCULATED-DESIGNED BY: PETROS DEMOZ
CHECKED BY: JIM ESPINOSA
REVISED BY
DATE REVISED

LAST REVISION 12-24-10
DATE PLOTTED => 31-AUG-2011
TIME PLOTTED => 16:08

Dist	COUNTY	ROUTE	POST MILES TOTAL PROJECT	SHEET No.	TOTAL SHEETS
05	SCr	1	17.7/18.1	31	47

REGISTERED CIVIL ENGINEER 06-29-11 DATE

8-29-11
PLANS APPROVAL DATE

REGISTERED PROFESSIONAL ENGINEER
ANDREY CHEVYCHALOV
No. 68378
Exp. 9-30-11
CIVIL
STATE OF CALIFORNIA

THE STATE OF CALIFORNIA OR ITS OFFICERS OR AGENTS SHALL NOT BE RESPONSIBLE FOR THE ACCURACY OR COMPLETENESS OF SCANNED COPIES OF THIS PLAN SHEET.

STATIONARY MOUNTED CONSTRUCTION AREA SIGNS

SIGN No.	SIGN CODE	PANEL SIZE	SIGN MESSAGE	No. OF POSTS	POST SIZE	No. OF SIGNS
A	W20-1	48" x 48"	ROAD WORK AHEAD	1	6" x 6"	4
B	G20-2	36" x 18"	END ROAD WORK	1	4" x 4"	2

NOTE:

EXACT SIGN LOCATIONS TO BE DETERMINED BY THE ENGINEER.

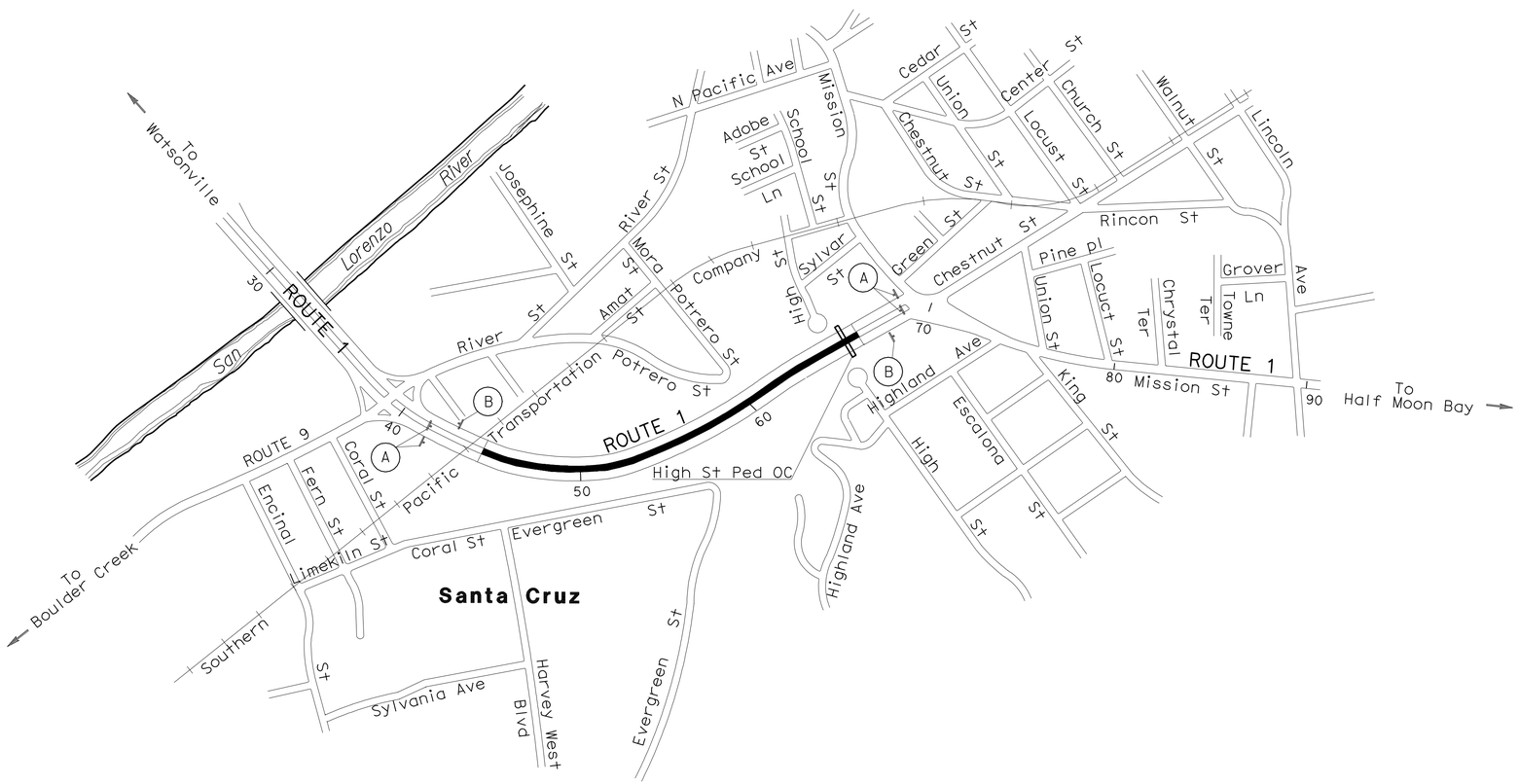

APPROVED FOR CONSTRUCTION AREA SIGN WORK ONLY

CONSTRUCTION AREA SIGNS

NO SCALE

CS-1

STATE OF CALIFORNIA - DEPARTMENT OF TRANSPORTATION
Caltrans® **TRAFFIC DESIGN**

FUNCTIONAL SUPERVISOR: MOHAMMED QATAMI

CALCULATED-DESIGNED BY: ANDREY CHEVYCHALOV
CHECKED BY: HASSAN TAHA

REVISED BY
DATE REVISED

LAST REVISION 06-29-11
DATE PLOTTED => 31-AUG-2011
TIME PLOTTED => 16:08

Dist	COUNTY	ROUTE	POST MILES TOTAL PROJECT	SHEET No.	TOTAL SHEETS
05	SCr	1	17.7/18.1	32	47

REGISTERED CIVIL ENGINEER 7-18-11 DATE

8-29-11
PLANS APPROVAL DATE

REGISTERED PROFESSIONAL ENGINEER
PETROS IYASU DEMOZ
No. 61652
Exp 6/30/13
CIVIL
STATE OF CALIFORNIA

THE STATE OF CALIFORNIA OR ITS OFFICERS OR AGENTS SHALL NOT BE RESPONSIBLE FOR THE ACCURACY OR COMPLETENESS OF SCANNED COPIES OF THIS PLAN SHEET.

CONCRETE BARRIER

STATION TO STATION "MB1" LINE	TYPE 60	TYPE 60C	TYPE 60F	REMARKS
	LF	LF	LF	
46+36.00 TO 65+00.00		1864		INCLUDED 15' Conc BARRIER TRANSITION
65+00.00 TO 65+17.68	17.7			
65+17.68 TO 66+18.10			100.4	
66+18.10 TO 66+33.10		15		Conc BARRIER TRANSITION
TOTAL	17.7	1879	100.4	

(N) NOT A SEPARATE ITEM, FOR INFORMATION ONLY

CRASH CUSHION (SCI-100GM)

PLAN SHEET No.	STATION TO STATION "MB1" LINE	CRASH CUSHION (SCI-100GM)
		EA
L-1	46+13.00 TO 46+36.00	1
L-3	66+33.10 TO 66+56.10	1
	TOTAL	2

TEMPORARY WATER POLLUTION CONTROL

PLAN SHEET No.	Temp FIBER ROLL
	LF
L-1 TO L-3	200
TOTAL	200

TEMPORARY DI PROTECTION

PLAN SHEET No.	STATION "MB1" LINE	Temp DRAINAGE INLET PROTECTION
		EA
D-1	45+25.00 Lt	1
D-1	46+51.00 Lt	1
D-1	46+51.00 Rt	1
D-1	46+14.69 Rt	1
D-1	46+45.13 Rt	1
D-2	49+48.26 Rt	1
D-2	52+47.76 Rt	1
D-2	55+46.77 Rt	1
D-2	57+50.37 Rt	1
D-2	58+46.42 Rt	1
D-2	59+46.56 Lt	1
D-3	61+96.36 Lt	1
D-3	63+81.33 Lt	1
TOTAL		13

ROADWAY QUANTITIES

STATION TO STATION "MB1" LINE	ROADWAY EXCAVATION (TYPE Z-2) (AERIALLY DEPOSITED LEAD)	COLD PLANE AC PAVEMENT (0.15' Max)	HMA (TYPE A)	(N) REMOVE MEDIAN CONCRETE GUTTER
	CY	SQYD	TON	CY
45+78.05 TO 66+84.70	530	1050	1730	66.6
TOTAL	530	1050	1730	

(N) NOT A SEPARATE ITEM, FOR INFORMATION ONLY

ARCHITECTURAL TEXTURE

PLAN SHEET No.	STATION TO STATION	ARCHITECTURAL TEXTURE (N)
		LF
L-1 TO L-3	46+36.00 TO 66+33.10	1997

(N) NOT A SEPARATE ITEM, FOR INFORMATION ONLY

SUMMARY OF QUANTITIES

Q-1

STATE OF CALIFORNIA - DEPARTMENT OF TRANSPORTATION
Caltrans
06-DESIGN

FUNCTIONAL SUPERVISOR: JIM ESPINOSA
CALCULATED-DESIGNED BY: PETROS DEMOZ
CHECKED BY: JIM ESPINOSA
REVISED BY
DATE REVISED

LAST REVISION 07-08-11
DATE PLOTTED => 31-AUG-2011
TIME PLOTTED => 16:20

Dist	COUNTY	ROUTE	POST MILES TOTAL PROJECT	SHEET No.	TOTAL SHEETS
05	SCr	1	17.7/18.1	33	47

REGISTERED CIVIL ENGINEER 06-29-11 DATE

8-29-11
PLANS APPROVAL DATE

REGISTERED PROFESSIONAL ENGINEER ANDREY CHEVYCHALOV No. 68378 Exp. 9-30-11 CIVIL STATE OF CALIFORNIA

THE STATE OF CALIFORNIA OR ITS OFFICERS OR AGENTS SHALL NOT BE RESPONSIBLE FOR THE ACCURACY OR COMPLETENESS OF SCANNED COPIES OF THIS PLAN SHEET.

LEGEND

- (X) ROADSIDE SIGN NUMBER
- ROADSIDE SIGN ONE POST
- ROADSIDE SIGN TWO POST
- ▲ RELOCATE ROADSIDE SIGN (FROM / TO)
- ■ REMOVE MILE POST MARKER
- OBJECT MARKER

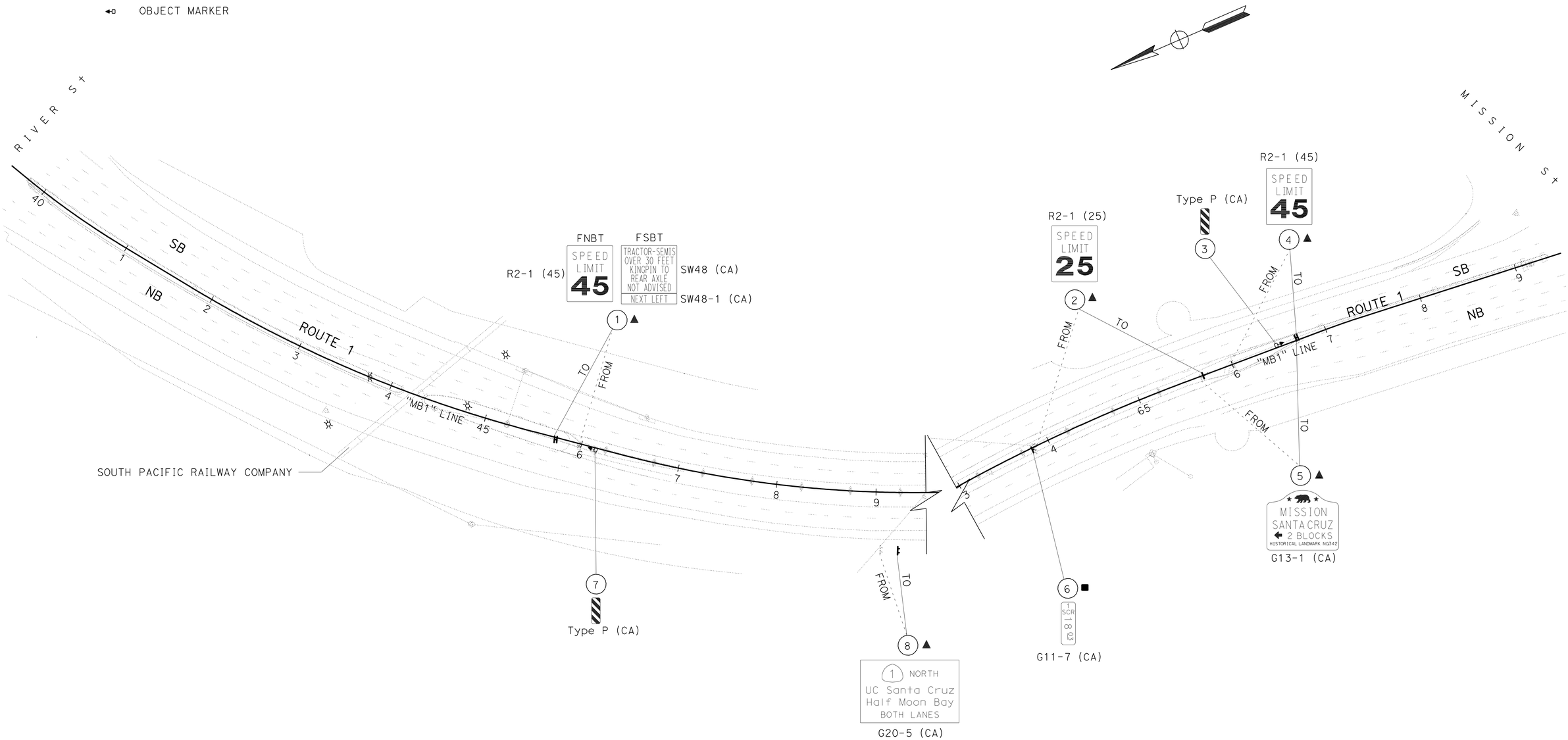

APPROVED FOR SIGN WORK ONLY

SCALE:1" = 50'

SIGN PLAN
S-1

STATE OF CALIFORNIA - DEPARTMENT OF TRANSPORTATION
Caltrans
TRAFFIC DESIGN

FUNCTIONAL SUPERVISOR: MOHAMMED QATAMI
CALCULATED-DESIGNED BY: ANDREY CHEVYCHALOV
CHECKED BY: HASSAN TAHA
REVISED BY
DATE REVISED

LAST REVISION 06-29-11
DATE PLOTTED => 31-AUG-2011
TIME PLOTTED => 16:39

Dist	COUNTY	ROUTE	POST MILES TOTAL PROJECT	SHEET No.	TOTAL SHEETS
05	SCr	1	17.7/18.1	34	47

REGISTERED CIVIL ENGINEER 07-07-11 DATE

8-29-11
PLANS APPROVAL DATE

REGISTERED PROFESSIONAL ENGINEER ANDREY CHEVYCHALOV No. 68378 Exp. 9-30-11 CIVIL STATE OF CALIFORNIA

THE STATE OF CALIFORNIA OR ITS OFFICERS OR AGENTS SHALL NOT BE RESPONSIBLE FOR THE ACCURACY OR COMPLETENESS OF SCANNED COPIES OF THIS PLAN SHEET.

SIGN QUANTITIES

SHEET No.	SIGN No.	SIGN CODE	SIGN MESSAGE	RELOCATE ROADSIDE SIGN	REMOVE MILE POST MARKER	OBJECT MARKER (TYPE P)	REMARKS
				EA	(N)	EA	
S-1	1	R2-1 (45)	SPEED LIMIT 45	1			
		SW48 (CA)	TRACTOR-SEMIS				
		SW48-1 (CA)	NEXT LEFT				
	2	R2-1 (25)	SPEED LIMIT 25	1			RELOCATE ON BENT
	3	TYPE P (CA)	OBJECT MARKER			1	
	4	R2-1 (45)	SPEED LIMIT 45	1			
	5	G13-1 (CA)	MISSION SANTA CRUZ	1			
	6	G11-7 (CA)	MARKER		1		
	7	TYPE P (CA)	OBJECT MARKER			1	
	8	G20-5 (CA)	Rte 1 NORTH	1			
			TOTAL	5	1	2	

YELLOW MEDIAN BARRIER MARKER QUANTITIES

LOCATION	MARKER (N)
	EA
STA 46+36 to STA 66+18.67	42

(N) NOT A SEPARATE PAY ITEM, FOR INFORMATION ONLY

PAVEMENT DELINEATION QUANTITIES

LOCATION	DIRECTION	DETAIL No.	PAVEMENT MARKER (RETROREFLECTIVE SPECIAL) TYPE H	THERMOPLASTIC TRAFFIC STRIPE (SPRAYABLE) 4"	REMOVE PAVEMENT MARKER (N)
			EA	LF	EA
STA 45+78.05 to STA 66+70.10	NB	27	42	2,093	42
STA 45+79.45 to STA 66+70.17	SB	27	42	2,091	42
		TOTAL	84	4,184	

(N) NOT A SEPARATE PAY ITEM, FOR INFORMATION ONLY

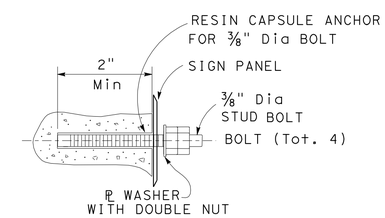

RESIN CAPSULE TYPE BOLT ANCHORAGE

INSTALL SIGN PANEL ON BENT

SIGN AND PAVEMENT DELINEATION QUANTITIES AND DETAILS

SQ-1

STATE OF CALIFORNIA - DEPARTMENT OF TRANSPORTATION
Caltrans® TRAFFIC DESIGN

FUNCTIONAL SUPERVISOR: MOHAMMED QATAMI
CALCULATED-DESIGNED BY: ANDREY CHEVYCHALOV
CHECKED BY: HASSAN TAHA
REVISED BY / DATE REVISED

LAST REVISION 07-07-11
DATE PLOTTED => 31-AUG-2011
TIME PLOTTED => 16:39

DIST	COUNTY	ROUTE	POST MILES TOTAL PROJECT	SHEET NO.	TOTAL SHEETS
05	SCr	1	17.7/18.1	35	47

REGISTERED CIVIL ENGINEER

November 17, 2006
PLANS APPROVAL DATE

REGISTERED PROFESSIONAL ENGINEER Dallas Forester No. C37765 Exp. 12-31-06 CIVIL STATE OF CALIFORNIA

The State of California or its officers or agents shall not be responsible for the accuracy or completeness of electronic copies of this plan sheet.

To accompany plans dated 8-29-11

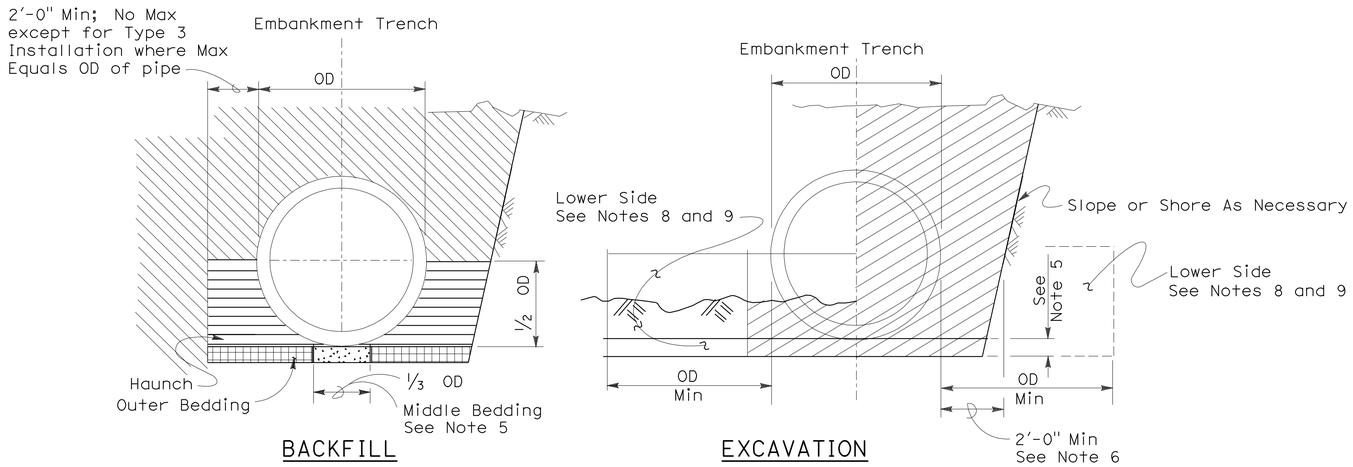

Roadway Embankment

Structure Backfill (Culvert) See Note 6

Structure Backfill (Culvert) See Note 6

Loose Backfill

Excavation Structure (Culvert)

TYPE 1 INSTALLATION:

The haunch and outer bedding shall be compacted to a minimum 90 percent relative compaction. In addition, the minimum sand equivalent in these areas shall be 30 and the maximum percentage passing the 75 μm sieve size shall be 12.

TYPE 2 INSTALLATION:

The haunch and outer bedding shall be compacted to a minimum 90 percent relative compaction. In addition, the minimum sand equivalent in these areas shall be 25.

TYPE 3 INSTALLATION:

The haunch and outer bedding shall be compacted to a minimum 85 percent relative compaction. 90 percent relative compaction will be required where the fill over the pipe is less than 4'-0" or 1/2 OD.

INSTALLATION TYPE 1

MINIMUM CLASS AND D-LOAD	COVER	
	108" Dia AND SMALLER	OVER 108" Dia
Class II 1000D	14.9'	12.9'
Class III 1350D	15.0' - 20.9'	13.0' - 18.9'
Class III Special 1700D	21.0' - 26.9'	19.0' - 24.9'
Class IV 2000D	27.0' - 31.9'	25.0' - 29.9'
Class IV Special 2500D	32.0' - 40.9'	30.0' - 38.9'
Class V 3000D	41.0' - 49.9'	39.0' - 46.9'
Class V Special 3600D	50.0' - 59.0'	47.0' - 58.0'

INSTALLATION TYPE 2

MINIMUM CLASS AND D-LOAD	COVER
Class II 1000D	9.9'
Class III 1350D	10.0'- 14.9'
Class III Special 1700D	15.0' - 19.9'
Class IV 2000D	20.0' - 24.9'
Class IV Special 2500D	25.0' - 31.9'
Class V 3000D	32.0' - 38.9'
Class V Special 3600D	39.0' - 47.0'

INSTALLATION TYPE 3

MINIMUM CLASS AND D-LOAD	COVER	
	48" Dia AND SMALLER	OVER 48" Dia
Class II 1000D	7.9'	5.9'
Class III 1350D	8.0' - 10.9'	6.0' - 8.9'
Class III Special 1700D	11.0' - 14.9'	9.0' - 12.9'
Class IV 2000D	15.0' - 17.9'	13.0' - 15.9'
Class IV Special 2500D	18.0' - 21.9'	16.0' - 19.9'
Class V 3000D	22.0' - 26.9'	20.0' - 24.9'
Class V Special 3600D	30.0' - 33.0'	25.0' - 31.0'

NOTES:

1. Unless otherwise shown on the plans or specified in the special provision, the Contractor shall have the option of selecting the class of RCP and the type of installation to be used, provided the height of cover does not exceed the value shown for the RCP selected.
   Example: 24" RCP culvert with maximum cover of 19'-0" the options are:
   a) Class III or stronger with Installation Type 1.
   b) Class III Special or stronger with Installation Type 2.
   c) Class IV Special or stronger with Installation Type 3.
   Cover is defined as the maximum vertical distance from top of the pipe to finished grade within the length of any given culvert.
2. The class of RCP and Installation Type selected shall be the same throughout the length of any given culvert.
3. The "length of any culvert" is defined as the culvert between:
   a) Successive drainage structure (inlets, junction boxes, headwalls, etc.).
   b) A drainage structure and the inlet or outlet end of the culvert.
   c) The inlet and outlet end of the culvert when there are no intervening drainage structures.
4. Oval and arch shaped RCP shall not be used.
5. 1/25 OD Min, not less than 3".
6. Slurry cement backfill may be substituted for backfill in the outer bedding and haunch areas. If slurry is used the outer and middle beddings shall be omitted. Prior to installation the soil under the middle 1/3 of the outside diameter of the pipe shall be softened by scarifying or other means to a minimum depth of 1/25 OD, but not less than 3". Where slurry cement backfill is used clear distance to trench wall may be reduced as set forth in Section 19-3.062 of the Standard Specifications.
7. Backfill shall be placed full width of excavation except where dimensions are shown for backfill width or thickness. Dimensions shown are minimums.
8. Lower side shall be suitable material as determined by the Engineer. Otherwise it shall be considered unsuitable as set forth in Section 19-2.02 of the Standard Specifications. See Note 9.
9. Where the pipe is placed in a trench, if the trench walls are sloped at 5 vertical to 1 horizontal or steeper for at least 90 percent of the trench height or up to not less than 12" from the grading plane, the firmness of the soil in the lower side need not be considered.
10. Non-reinforced precast concrete pipe sizes 3'-0" or smaller may be placed under installation Types 1, 2 or 3.

STATE OF CALIFORNIA
DEPARTMENT OF TRANSPORTATION

EXCAVATION AND BACKFILL CONCRETE PIPE CULVERTS

NO SCALE

RSP A62DA DATED NOVEMBER 17, 2006 SUPERSEDES STANDARD PLAN A62DA DATED MAY 1, 2006 - PAGE 20 OF THE STANDARD PLANS BOOK DATED MAY 2006.

REVISED STANDARD PLAN RSP A62DA

2006 REVISED STANDARD PLAN RSP A62DA

10-26-06

DIST	COUNTY	ROUTE	POST MILES TOTAL PROJECT	SHEET NO.	TOTAL SHEETS
05	SCr	1	17.7/18.1	36	47

Randell D. Hiatt
REGISTERED CIVIL ENGINEER

June 6, 2008
PLANS APPROVAL DATE

REGISTERED PROFESSIONAL ENGINEER
Randell D. Hiatt
No. C50200
Exp. 6-30-09
CIVIL
STATE OF CALIFORNIA

The State of California or its officers or agents shall not be responsible for the accuracy or completeness of electronic copies of this plan sheet.

To accompany plans dated 8-29-11

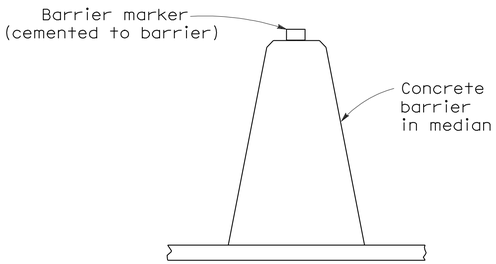

CONCRETE BARRIER TYPE 60 DELINEATION

See Notes 7 and 8

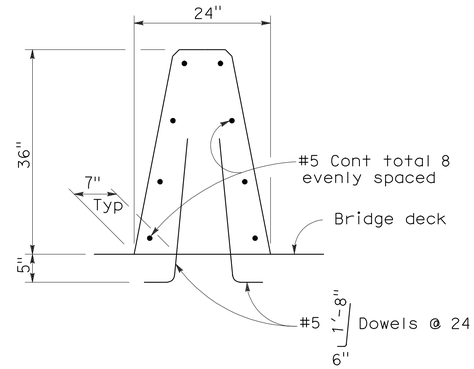

CONCRETE BARRIER TYPE 60A

Details similar to Type 60 except as noted.

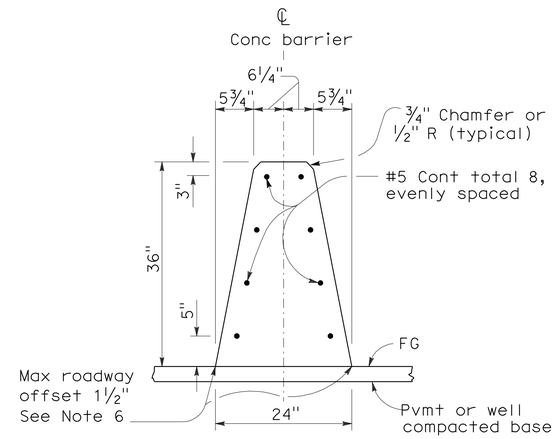

CONCRETE BARRIER TYPE 60

NOTES:

1. See Standard Plan A76B for details of Concrete Barrier Type 60 end anchors, connection to structures and transitions to Concrete Barrier Type 50 and Concrete Barrier Type 60S.
2. See Standard Plan A76C for Concrete Barrier Type 60 transitions at bridge column and sign pedestals.
3. Where glare screen is required on Concrete Barrier Type 60, use Concrete Barrier Type 60G.
4. Where the concrete barrier is added to the face of existing concrete structure, match existing weep holes.
5. Expansion joints in concrete barrier shall be located at all deck, pavement and principal wall joints. Expansion joint filler material shall be the same size as joint or ½" minimum.
6. Where roadway offset is greater than 1½", see Concrete Barrier Type 60C.
7. Barrier delineation to be used when required by the Special Provisions.
8. Spacing of barrier markers to match spacing of raised pavement markers on the adjacent median edgeline pavement delineation.
9. Reinforcing stirrup not required for roadway offsets less than 1'-0".
10. For roadway surfaces offset greater than 1½" to 3", no rebars required. For roadway surfaces offset greater than 3" to 8" use two #4 rebars at 3" above the lower roadway surface. For roadway surfaces offset greater than 8" to 12", use two #4 rebars at 3" above the lower roadway surface and two #4 rebars at 8" above the lower roadway surface. For roadway surfaces offset greater than 12" to 36", use two #4 rebars at 3" above the lower roadway surface and two #4 rebars at every 8" increment vertical spacing above the first two #4 rebars.

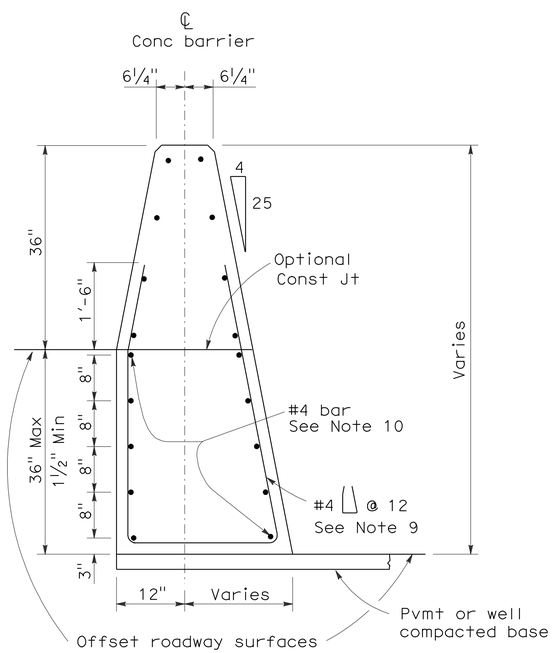

CONCRETE BARRIER TYPE 60C

Details similar to Type 60 except as noted.
Concrete barrier end anchor when necessary.
36" roadway surfaces offset shown.

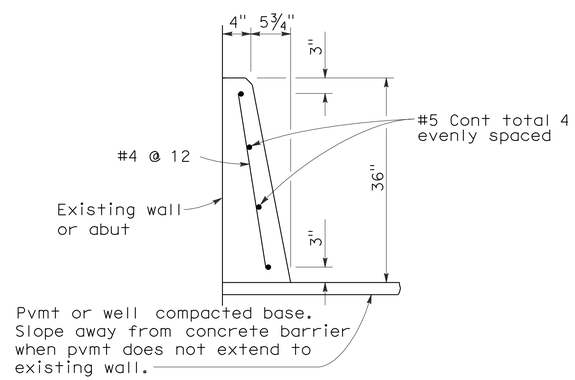

CONCRETE BARRIER TYPE 60D

STATE OF CALIFORNIA
DEPARTMENT OF TRANSPORTATION

CONCRETE BARRIER TYPE 60

NO SCALE

RSP A76A DATED JUNE 6, 2008 SUPERSEDES STANDARD PLAN A76A
DATED MAY 1, 2006 - PAGE 29 OF THE STANDARD PLANS BOOK DATED MAY 2006.

REVISED STANDARD PLAN RSP A76A

2006 REVISED STANDARD PLAN RSP A76A

5-21-08

DIST	COUNTY	ROUTE	POST MILES TOTAL PROJECT	SHEET NO.	TOTAL SHEETS
05	SCr	1	17.7/18.1	37	47

Raymond Don Tsztoo
REGISTERED CIVIL ENGINEER

January 18, 2008
PLANS APPROVAL DATE

REGISTERED PROFESSIONAL ENGINEER
Raymond Don Tsztoo
No. C37332
Exp. 6-30-08
CIVIL
STATE OF CALIFORNIA

The State of California or its officers or agents shall not be responsible for the accuracy or completeness of electronic copies of this plan sheet.

To accompany plans dated 8-29-11

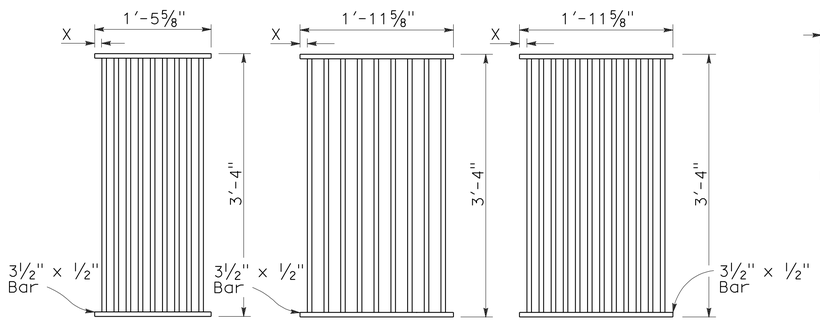

TYPE 18-9

1⅜" Clear spacing. Use within the roadbed on highways where bicycles and pedestrians are excluded.

TYPE 24-9

2" Clear spacing. Use in locations off the roadbed on all types of highways.

TYPE 24-12

1⅜" Clear spacing. Use within the roadbed on highways where bicycles and pedestrians are excluded.

RECTANGULAR GRATE DETAILS

(See table below)

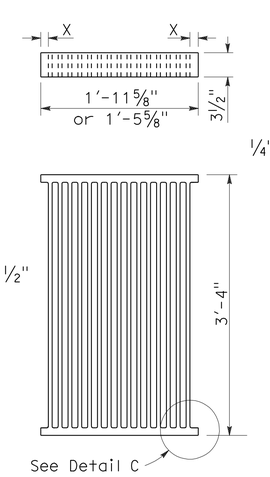

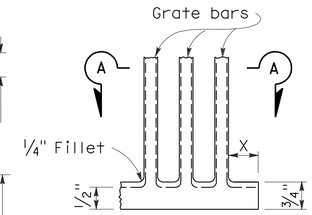

DETAIL C

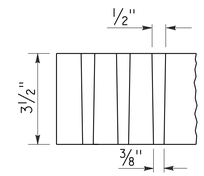

SECTION A-A

ALTERNATIVE CAST NODULAR IRON GRATE OR CAST STEEL GRATE

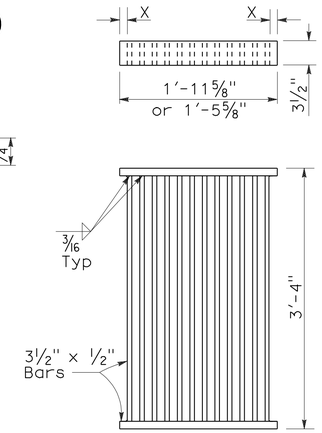

ALTERNATIVE WELDED GRATE

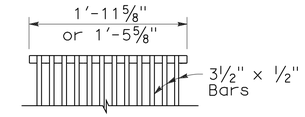

CAST END BLOCK

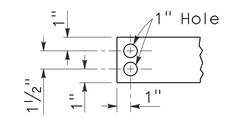

END OF BAR

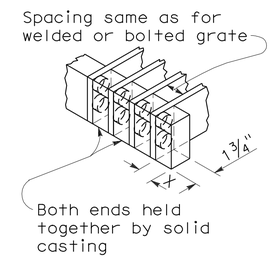

ALTERNATIVE CAST NODULAR IRON OR CAST STEEL END BLOCK GRATE

NOTES:

1. Grate type numbers refer to approximate width of grate in inches and number of bars, respectively.
2. Contractor has the option of using cast nodular iron, cast steel, welded, bolted, or cast end block grate.
3. See Special Provisions for requirements pertaining to galvanizing or asphalt dipping of grates and frames.
4. Rounded top of bars optional on all grates.
5. Pipe inlets with a grate shall be placed so that bars parallel direction of principle surface flow.
6. Full penetration butt welds may be substituted for the fillet welds on all anchors.
7. Standard square, hexagon, round or equivalent headed anchors may be substituted for the right angle hooks on the anchors shown on this plan.
8. Grate and frame weights are based on welded grates (weights of face angles, steps, protection bars, etc. are not included).

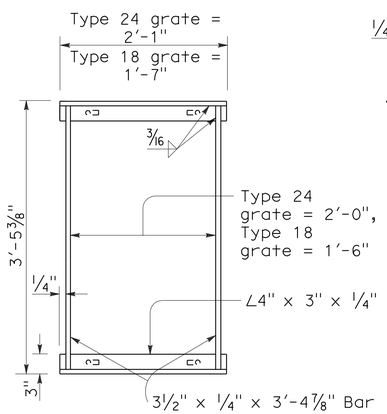

TYPICAL FRAME

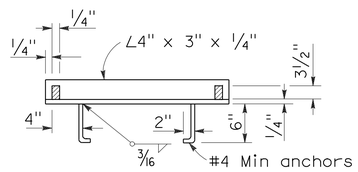

CROSS SECTION

(Thru frame)

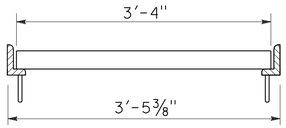

LONGITUDINAL SECTION

(Thru frame and grate)

RECTANGULAR FRAME DETAILS

(For all rectangular grates)

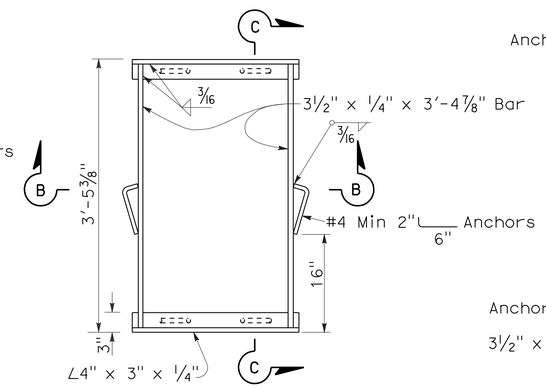

TYPICAL FRAME

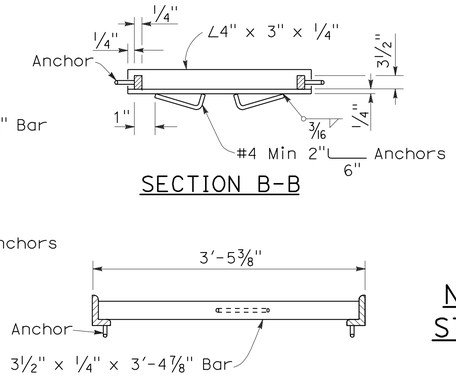

SECTION B-B

SECTION C-C

ALTERNATIVE ANCHOR FOR RECTANGULAR FRAME

(For details not shown, See Rectangular Frame Details)

INLET TYPE	GRATE TYPE	No. OF GRATES	WEIGHT LB
GDO	24-12	2	634
GOL-7	24-12	1	326
GOL-10	24-12	1	326
GO,G1,G2,G3,G4 (TYPE 24)	24-9	1	263
	24-12	1	326
G4 (TYPE 18),G5,G6	18-9	1	249
GT1	18-9	2	498
GT2	18-9	2	498
GT3	24-12	2	652
GT4	24-12	2	652
TRASH RACK			22

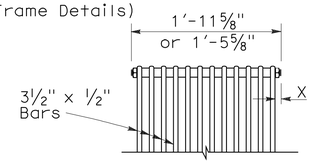

BOLTED END BLOCK

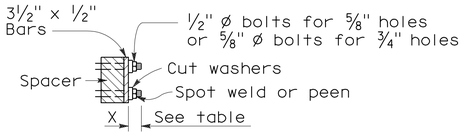

BOLTING DETAIL

ALTERNATIVE BOLTED GRATE

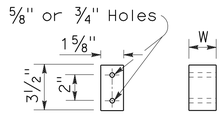

BAR SPACER

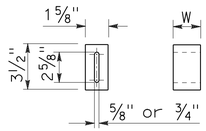

ALTERNATIVE SPACER

W = 1⅜" or 2"

GRATE BAR SPACING TABLE

TYPE	No. OF BARS	CLEAR BAR SPACING	X
18-9	9	1⅜"	1 1/16"
24-9	9	2"	1 9/16"
24-12	12	1⅜"	1¼"

INLET TYPE	COVER TYPE	WEIGHT LB
OS	PLATE	174
OL-7	PLATE	170
OL-10	PLATE	170
OL-14	PLATE	170
OL-21	PLATE	170
OCP	PLATE	112
OCPI	PLATE	112
OCPI	REDWOOD	42
OMP	PLATE	177
OMPI	PLATE	177

BASIS FOR MISC IRON & STEEL FINAL PAY WEIGHTS FOR DRAINAGE INLETS

(See General Notes, No 8)

STATE OF CALIFORNIA
DEPARTMENT OF TRANSPORTATION

GRATE DETAILS

NO SCALE

RSP D77A DATED JANUARY 18, 2008 SUPERSEDES STANDARD PLAN D77A DATED MAY 1, 2006 - PAGE 155 OF THE STANDARD PLANS BOOK DATED MAY 2006.

REVISED STANDARD PLAN RSP D77A

2006 REVISED STANDARD PLAN RSP D77A

12-14-07

DIST	COUNTY	ROUTE	POST MILES TOTAL PROJECT	SHEET NO.	TOTAL SHEETS
05	SCr	1	17.7/18.1	38	47

Randell D. Hiatt
REGISTERED CIVIL ENGINEER

June 6, 2008
PLANS APPROVAL DATE

REGISTERED PROFESSIONAL ENGINEER
Randell D. Hiatt
No. C50200
Exp. 6-30-09
CIVIL
STATE OF CALIFORNIA

The State of California or its officers or agents shall not be responsible for the accuracy or completeness of electronic copies of this plan sheet.

To accompany plans dated 8-29-11

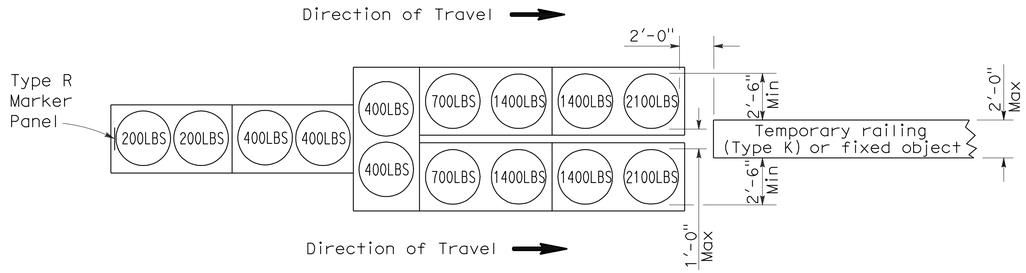

ARRAY 'TU14'

Approach speed 45 mph or more

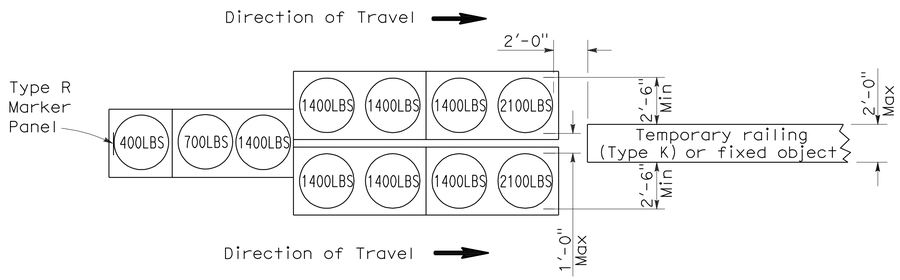

ARRAY 'TU11'

Approach speed less than 45 mph

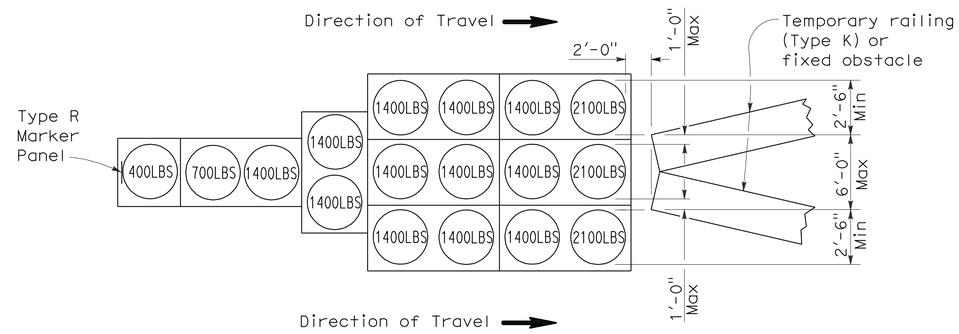

ARRAY 'TU17'

Approach speed less than 45 mph

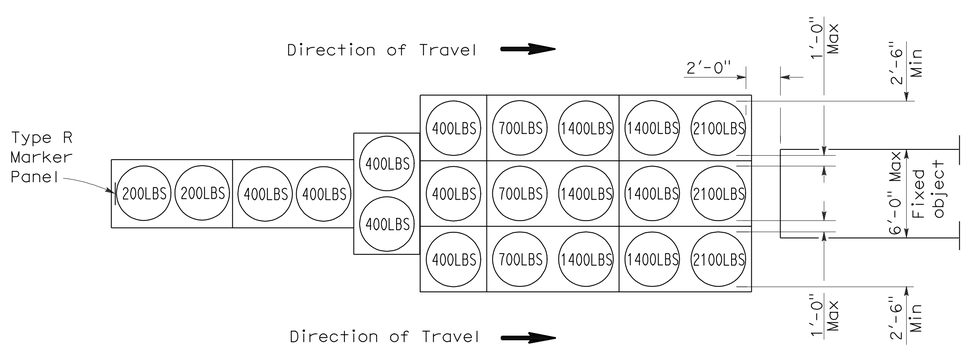

ARRAY 'TU21'

Approach speed 45 mph or more

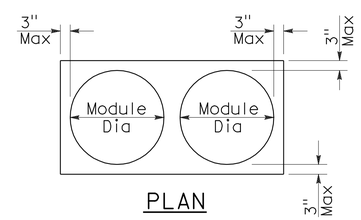

PLAN

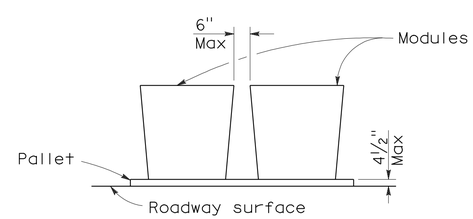

ELEVATION

CRASH CUSHION PALLET DETAIL

See Note 7

NOTES:

1. (XXX) Indicates sand filled module location and weight of sand in pounds for each module. Module spacing is based on the greater diameter of the module.
2. All sand weights are nominal.
3. Temporary crash cushion arrays shall not encroach on the traveled way.
4. Place the top of Type R marker panel 1" below the module lid.
5. Refer to Standard Plan A73B for marker details.
6. Approach speeds indicated conform to NCHRP 350 Report criteria.
7. Use of pallets is optional.

STATE OF CALIFORNIA
DEPARTMENT OF TRANSPORTATION

TEMPORARY CRASH CUSHION, SAND FILLED (UNIDIRECTIONAL)

NO SCALE

RSP T1A DATED JUNE 6, 2008 SUPERSEDES STANDARD PLAN T1A
DATED MAY 1, 2006 - PAGE 211 OF THE STANDARD PLANS BOOK DATED MAY 2006.

REVISED STANDARD PLAN RSP T1A

2006 REVISED STANDARD PLAN RSP T1A

DIST	COUNTY	ROUTE	POST MILES TOTAL PROJECT	SHEET NO.	TOTAL SHEETS
05	SCr	1	17.7/18.1	39	47

Randell D. Hiatt
REGISTERED CIVIL ENGINEER

June 6, 2008
PLANS APPROVAL DATE

REGISTERED PROFESSIONAL ENGINEER
Randell D. Hiatt
No. C50200
Exp. 6-30-09
CIVIL
STATE OF CALIFORNIA

The State of California or its officers or agents shall not be responsible for the accuracy or completeness of electronic copies of this plan sheet.

To accompany plans dated 8-29-11

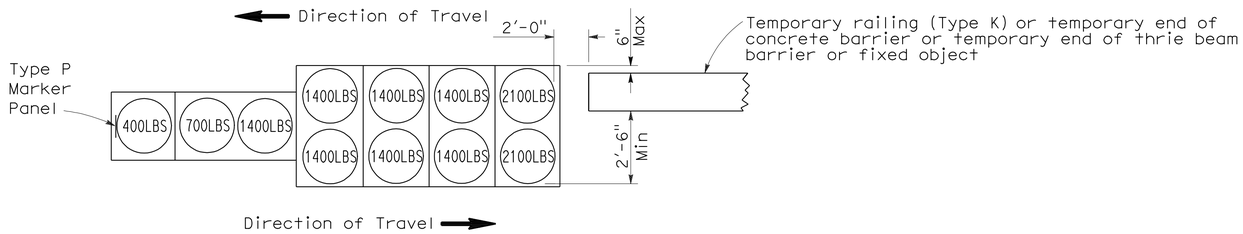

ARRAY 'TB11'

Approach speed less than 45 mph

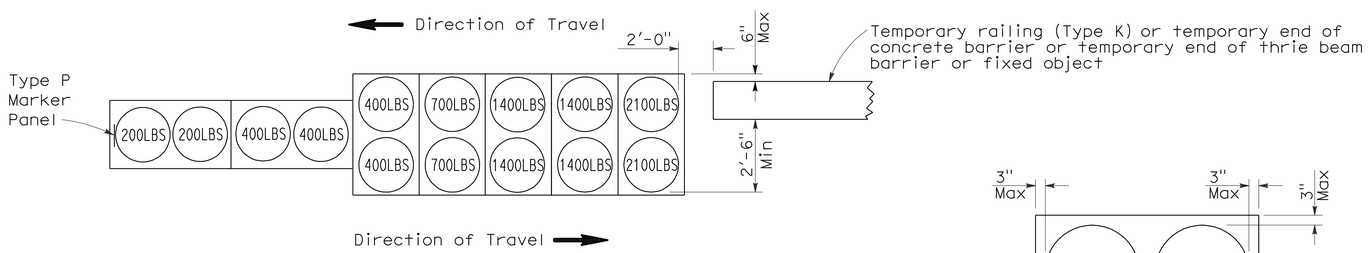

ARRAY 'TB14'

Approach speed 45 mph or more

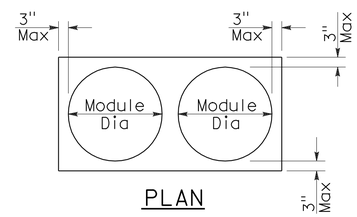

PLAN

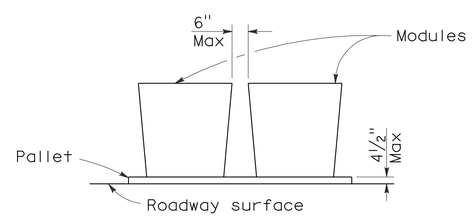

ELEVATION

CRASH CUSHION PALLET DETAIL

See Note 7

NOTES:

1. (XXX) Indicates sand filled module location and weight of sand in pounds for each module. Module spacing is based on the greater diameter of the module.
2. All sand weights are nominal.
3. Temporary crash cushion arrays shall not encroach on the traveled way.
4. Place the Type P marker panel so that the bottom of the panel rests upon the pallet.
5. Refer to Standard Plan A73B for marker details.
6. Approach speeds indicated conform to NCHRP 350 Report criteria.
7. Use of pallets is optional.

STATE OF CALIFORNIA
DEPARTMENT OF TRANSPORTATION

TEMPORARY CRASH CUSHION, SAND FILLED (BIDIRECTIONAL)

NO SCALE

RSP T1B DATED JUNE 6, 2008 SUPERSEDES STANDARD PLAN T1B
DATED MAY 1, 2006 - PAGE 212 OF THE STANDARD PLANS BOOK DATED MAY 2006.

REVISED STANDARD PLAN RSP T1B

2006 REVISED STANDARD PLAN RSP T1B

5-15-08

DIST	COUNTY	ROUTE	POST MILES TOTAL PROJECT	SHEET NO.	TOTAL SHEETS
05	SCr	1	17.7/18.1	40	47

Randell D. Hiatt
REGISTERED CIVIL ENGINEER

June 6, 2008
PLANS APPROVAL DATE

REGISTERED PROFESSIONAL ENGINEER
Randell D. Hiatt
No. C50200
Exp. 6-30-09
CIVIL
STATE OF CALIFORNIA

The State of California or its officers or agents shall not be responsible for the accuracy or completeness of electronic copies of this plan sheet.

To accompany plans dated 8-29-11

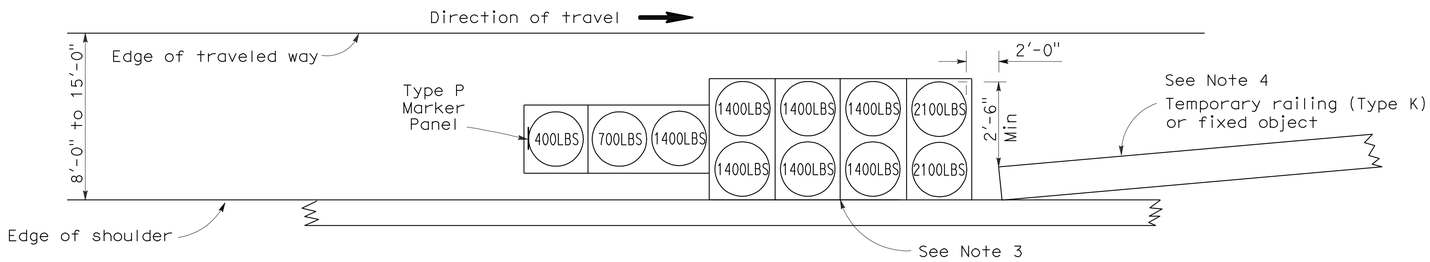

ARRAY 'TS11'

Approach speed less than 45 mph
See Note 9

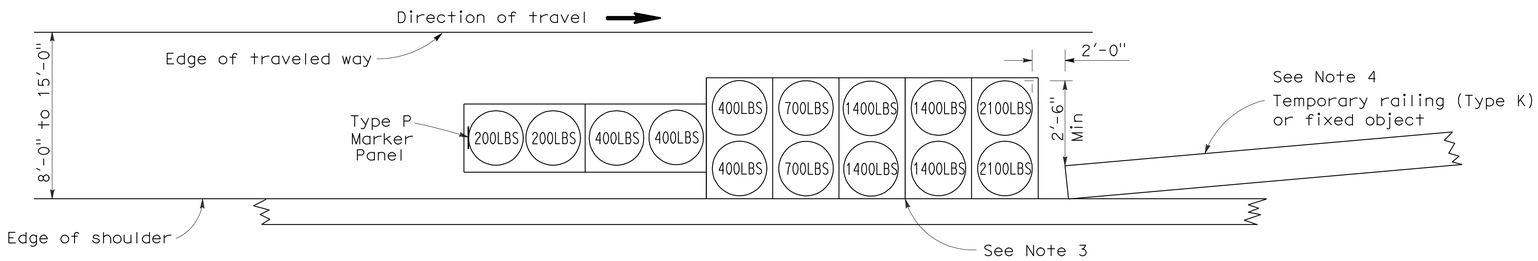

ARRAY 'TS14'

Approach speed 45 mph or more
See Note 9

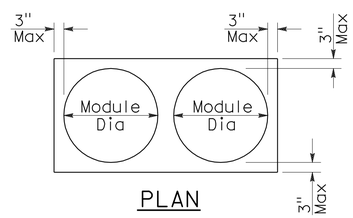

PLAN

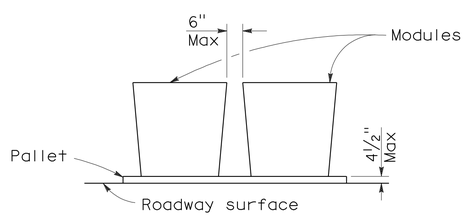

ELEVATION

CRASH CUSHION PALLET DETAIL

See Note 11

NOTES:

1. (XXX) Indicates sand filled module location and weight of sand in pounds for each module. Module spacing is based on the greater diameter of the module.
2. All sand weights are nominal.
3. The temporary crash cushion arrays shown on this plan shall be used only in locations where there will be traffic on one side of the temporary crash cushion array.
4. If the fixed object or approach end of the temporary railing is less than 15'-0" from the edge of traveled way, a temporary crash cushion is required in a construction or work zone.
5. Temporary crash cushion arrays shall not encroach on the traveled way.
6. Arrays for median shoulders shall conform to details shown on this plan for outside shoulders.
7. Place the Type P marker panel so that the bottom of the panel rests upon the pallet and faces traffic.
8. Refer to Standard Plan A73B for marker details.
9. For shoulder widths less than 8'-0", appropriate approved crash cushion protection, other than sand filled modules, shall be provided at fixed objects and at approach ends of temporary railing. The specific type of crash cushion shall be as shown on the project plans or as specified in the Special Provisions, or if not shown on the project plans or specified in the Special Provisions, shall be as approved by the Engineer.
10. Approach speeds indicated conform to NCHRP 350 Report criteria.
11. Use of pallets is optional.

STATE OF CALIFORNIA
DEPARTMENT OF TRANSPORTATION

TEMPORARY CRASH CUSHION, SAND FILLED (SHOULDER INSTALLATIONS)

NO SCALE

RSP T2 DATED JUNE 6, 2008 SUPERSEDES STANDARD PLAN T2
DATED MAY 1, 2006 - PAGE 213 OF THE STANDARD PLANS BOOK DATED MAY 2006.

REVISED STANDARD PLAN RSP T2

2006 REVISED STANDARD PLAN RSP T2

5-15-08

Dist	COUNTY	ROUTE	POST MILES TOTAL PROJECT	SHEET No.	TOTAL SHEETS
05	SCr	1	17.7/18.1	41	47

Randell D. Hiatt
REGISTERED CIVIL ENGINEER

May 20, 2011
PLANS APPROVAL DATE

REGISTERED PROFESSIONAL ENGINEER
Randell D. Hiatt
No. C50200
Exp. 6-30-11
CIVIL
STATE OF CALIFORNIA

The State of California or its officers or agents shall not be responsible for the accuracy or completeness of electronic copies of this plan sheet.

To accompany plans dated 8-29-11

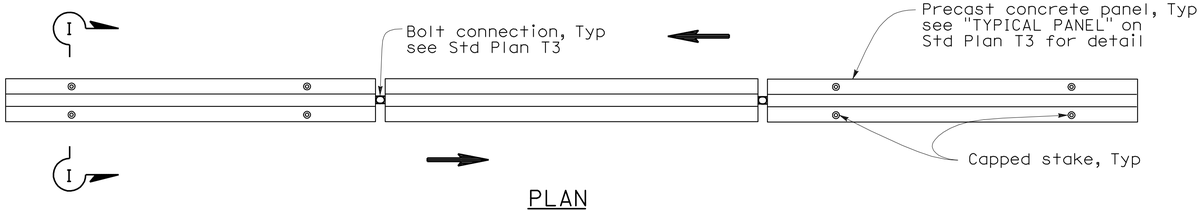

PLAN

RAILING STAKING CONFIGURATION FOR TWO-WAY TRAFFIC

See Note 1

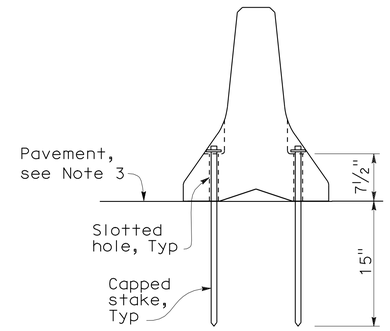

SECTION I-I

NOTES:

1. Where Type K Temporary Railing is placed as a temporary or long term barrier in two-way traffic on highways with less than 24" from the edge of traveled way, use four capped stakes per every other panel with end panels staked.
2. Where Type K Temporary Railing is placed 3" to 24" from the edge of an excavation on highways, use two capped stakes per panel along the traffic side.
3. Staked Type K Temporary Railing must be supported by at least 4" thick concrete, hot mix asphalt or existing asphalt concrete pavement.
4. The minimum yield strength for the washer must be 60,000 psi.
5. Direction of adjacent traffic indicated by ⟹.

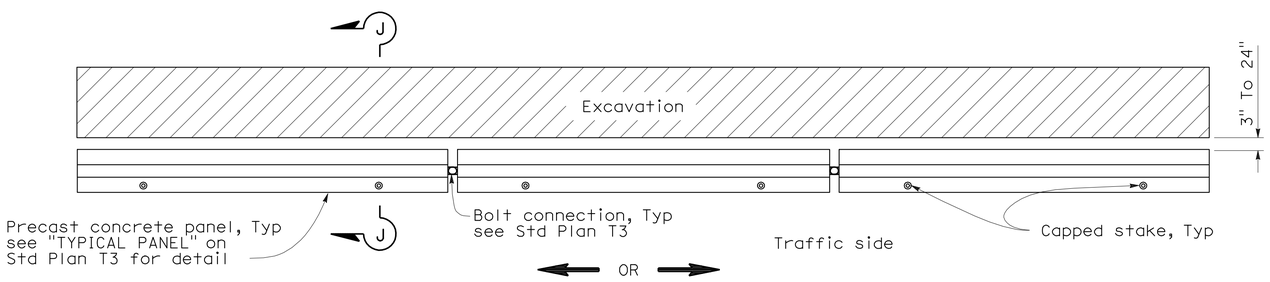

PLAN

RAILING STAKING CONFIGURATION ADJACENT TO AN EXCAVATION

See Note 2

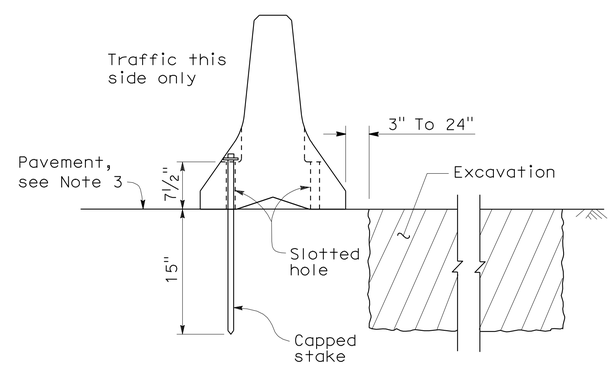

SECTION J-J

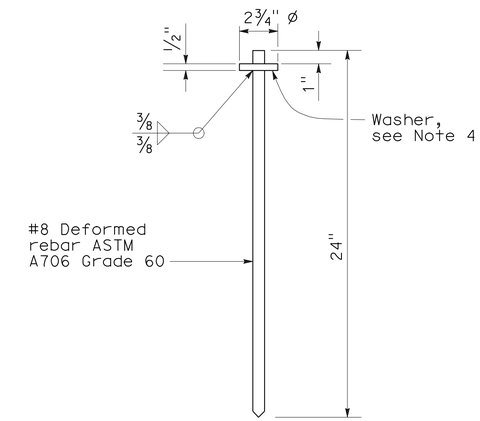

CAPPED STAKE DETAIL

STATE OF CALIFORNIA
DEPARTMENT OF TRANSPORTATION

TEMPORARY RAILING (TYPE K)

NO SCALE

NSP T3A DATED MAY 20, 2011 SUPPLEMENTS
THE STANDARD PLANS BOOK DATED MAY 2006.

NEW STANDARD PLAN NSP T3A

2006 NEW STANDARD PLAN NSP T3A

DIST	COUNTY	ROUTE	POST MILES TOTAL PROJECT	SHEET NO.	TOTAL SHEETS
05	SCr	1	17.7/18.1	42	47

REGISTERED CIVIL ENGINEER

November 17, 2006
PLANS APPROVAL DATE

REGISTERED PROFESSIONAL ENGINEER
Greg W. Edwards
No. C36386
Exp. 6-30-08
CIVIL
STATE OF CALIFORNIA

The State of California or its officers or agents shall not be responsible for the accuracy or completeness of electronic copies of this plan sheet.

To accompany plans dated 8-29-11

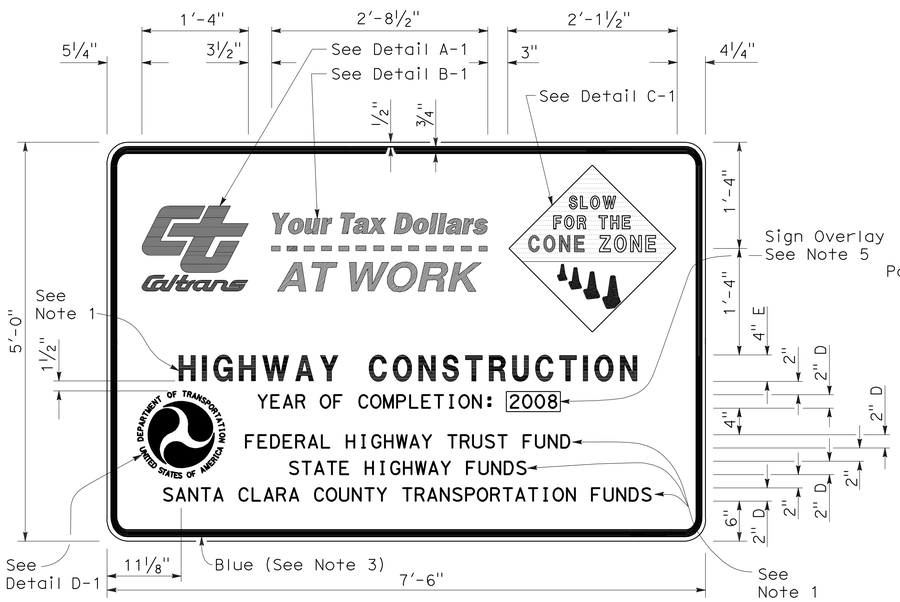

TYPE 1

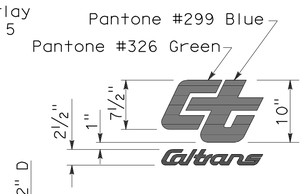

DETAIL A-1

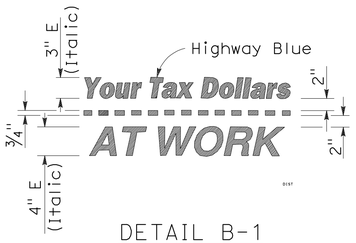

DETAIL B-1
(See Note 3)

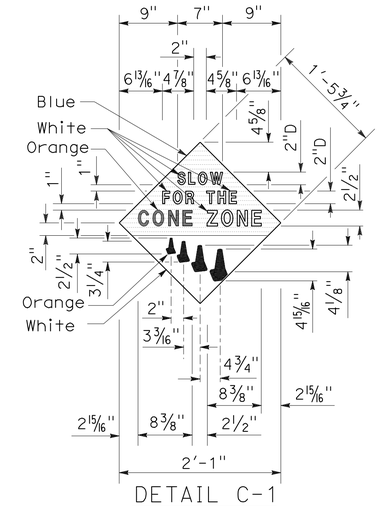

DETAIL C-1
(See Note 4)

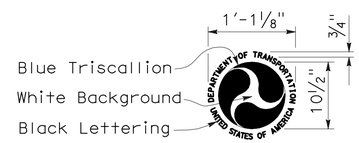

DETAIL D-1
(See Note 6)

NOTES:

1. The sign messages shown for type of project and fund types are examples only. See the Special Provisions for the applicable type of project and fund type messages to be used.
2. Except as otherwise shown, the legend of sign shall be black on a white background (non-reflective).
3. The border of the signs and details "B-1" and "B-2" shall be blue (non-reflective).
4. The diamond in details "C-1" and "C-2" shall be blue for the background of message, " SLOW FOR THE CONE ZONE", and white background for the orange cones. The color and type of font for the "SLOW FOR THE CONE ZONE" message shall be: "SLOW" white D; "FOR THE" white D; "CONE" orange Arial font; "ZONE" white Arial font.
5. Year of completion of project construction shown on the overlay is an example only. See the Special Provisions.
6. Use when the Project involves Federal Highway Trust Fund.

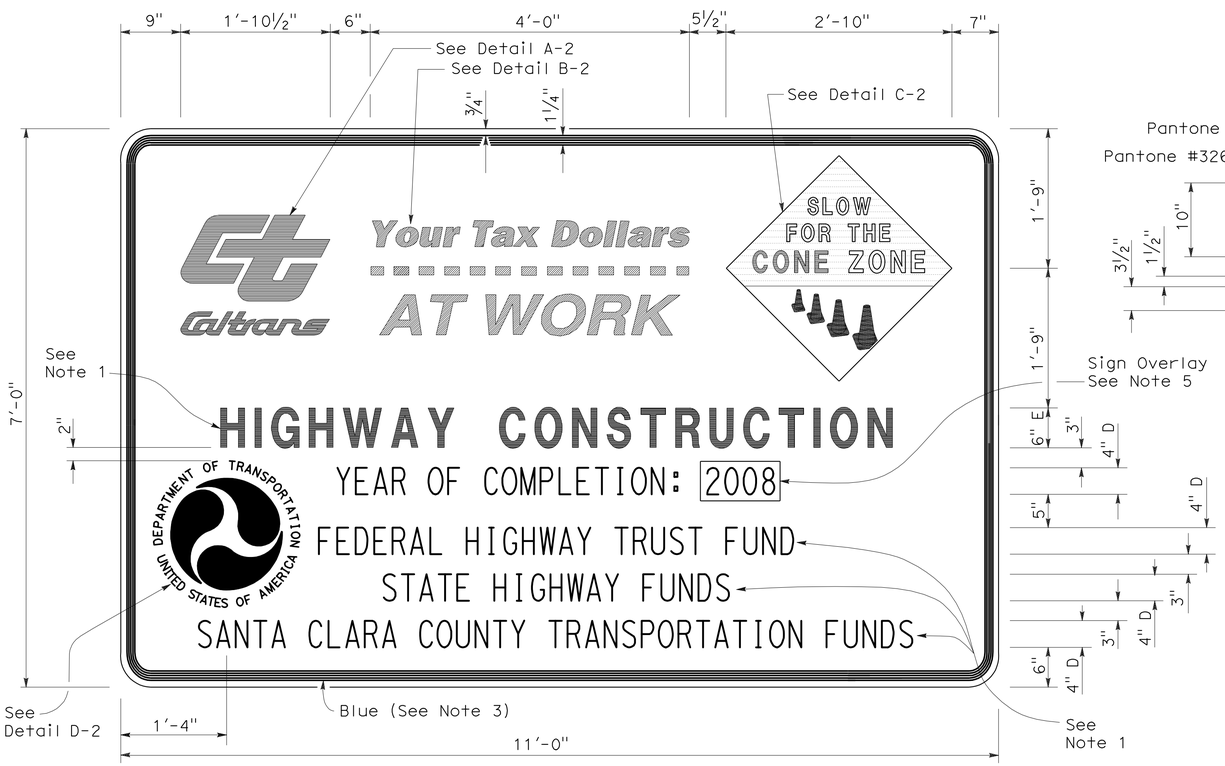

TYPE 2

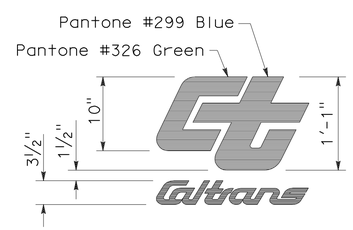

DETAIL A-2

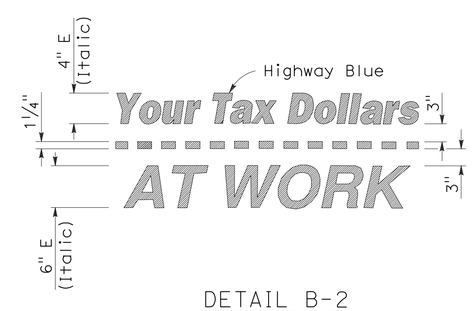

DETAIL B-2
(See Note 3)

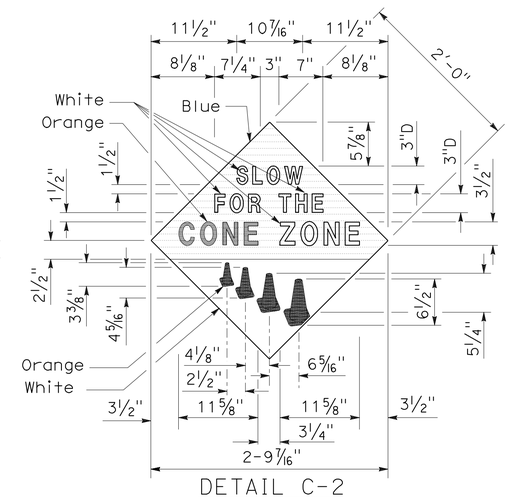

DETAIL C-2
(See Note 4)

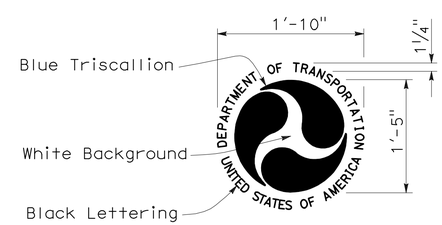

DETAIL D-2
(See Note 6)

STATE OF CALIFORNIA
DEPARTMENT OF TRANSPORTATION

CONSTRUCTION PROJECT FUNDING IDENTIFICATION SIGNS

NO SCALE

RSP T7 DATED NOVEMBER 17, 2006 SUPERSEDES STANDARD PLAN T7
DATED MAY 1, 2006 - PAGE 217 OF THE STANDARD PLANS BOOK DATED MAY 2006.

REVISED STANDARD PLAN RSP T7

2006 REVISED STANDARD PLAN RSP T7

9-7-06

DIST	COUNTY	ROUTE	POST MILES TOTAL PROJECT	SHEET NO.	TOTAL SHEETS
05	SCr	1	17.7/18.1	43	47

Robert B. Schott
LICENSED LANDSCAPE ARCHITECT

April 3, 2009
PLANS APPROVAL DATE

LICENSED LANDSCAPE ARCHITECT — Robert B. Schott — 3025 — Signature — 11-30-10 Renewal Date — 2-25-09 Date — STATE OF CALIFORNIA

The State of California or its officers or agents shall not be responsible for the accuracy or completeness of electronic copies of this plan sheet.

To accompany plans dated 8-29-11

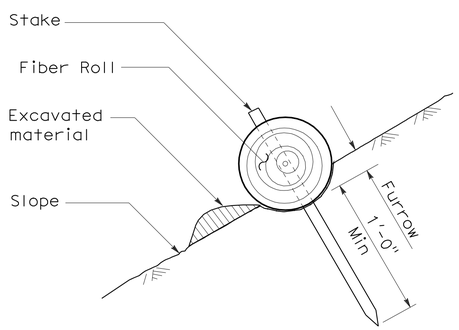

SECTION

TEMPORARY FIBER ROLL (TYPE 1)

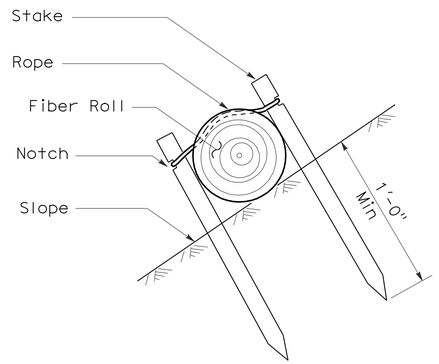

SECTION

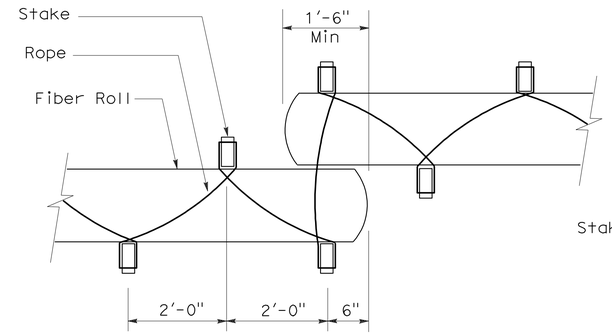

PLAN

TEMPORARY FIBER ROLL (TYPE 2)

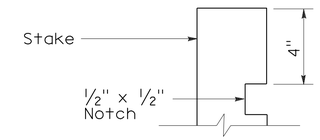

ELEVATION

STAKE NOTCH DETAIL

NOTES:

1. Temporary fiber roll spacing varies depending upon slope inclination.
2. Installations shown in the perspectives are for slope inclination of 10:1 and steeper.

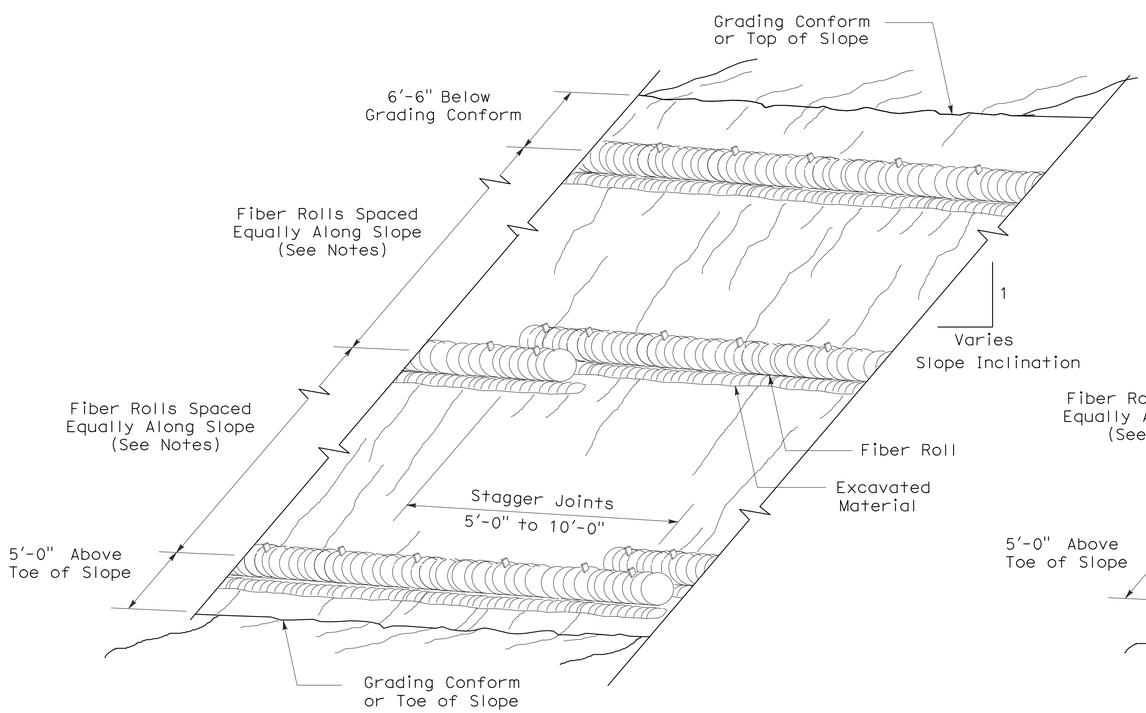

PERSPECTIVE

TEMPORARY FIBER ROLL (TYPE 1)

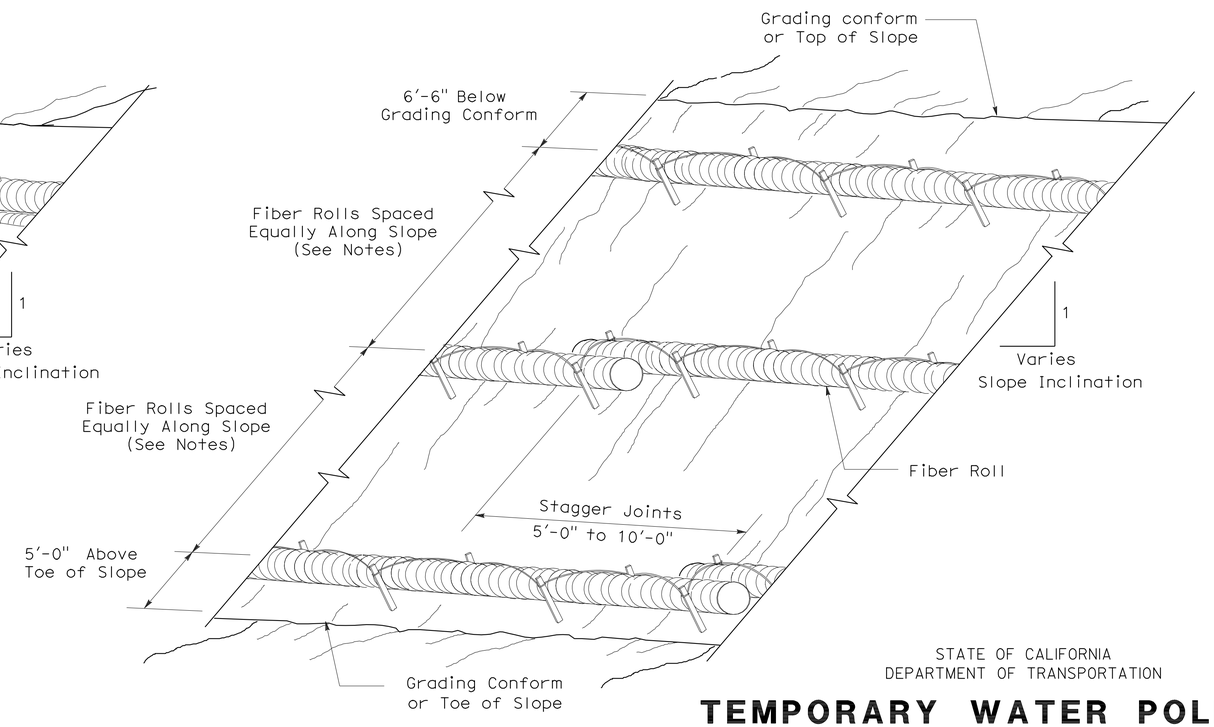

PERSPECTIVE

TEMPORARY FIBER ROLL (TYPE 2)

STATE OF CALIFORNIA
DEPARTMENT OF TRANSPORTATION

TEMPORARY WATER POLLUTION CONTROL DETAILS (TEMPORARY FIBER ROLL)

NO SCALE

RSP T56 DATED APRIL 3, 2009 SUPERSEDES STANDARD PLAN T56
DATED MAY 1, 2006 - PAGE 232 OF THE STANDARD PLANS BOOK DATED MAY 2006.

REVISED STANDARD PLAN RSP T56

2006 REVISED STANDARD PLAN RSP T56

2-23-09

DIST	COUNTY	ROUTE	POST MILES TOTAL PROJECT	SHEET NO.	TOTAL SHEETS
05	SCr	1	17.7/18.1	44	47

LICENSED LANDSCAPE ARCHITECT

August 15, 2008
PLANS Approval DATE

The State of California or its officers or agents shall not be responsible for the accuracy or completeness of electronic copies of this plan sheet.

LICENSED LANDSCAPE ARCHITECT Robert B. Schott 3895 Signature 11-04-08 Renewal Date 08-11-08 Date STATE OF CALIFORNIA

To accompany plans dated 8-29-11

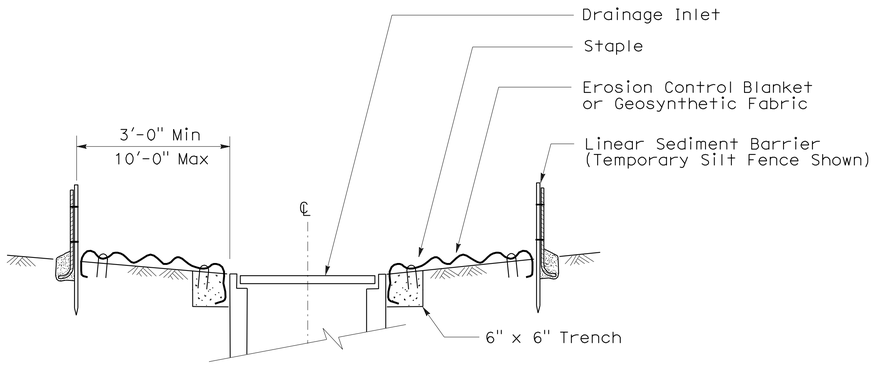

SECTION A-A

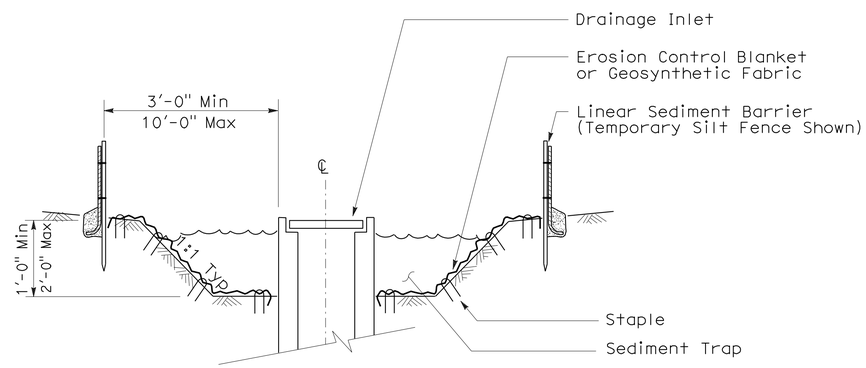

SECTION B-B

NOTES:

1. See Standard Plan T51 for Temporary Silt Fence.
2. Dimensions may vary to fit field conditions.

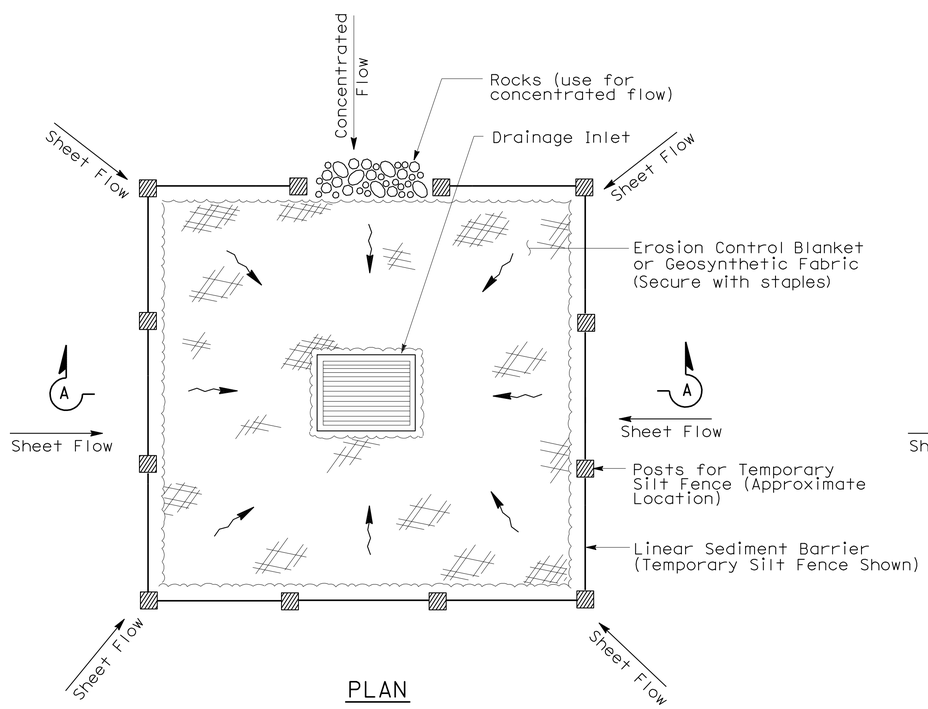

PLAN

TEMPORARY DRAINAGE INLET PROTECTION (TYPE 1)

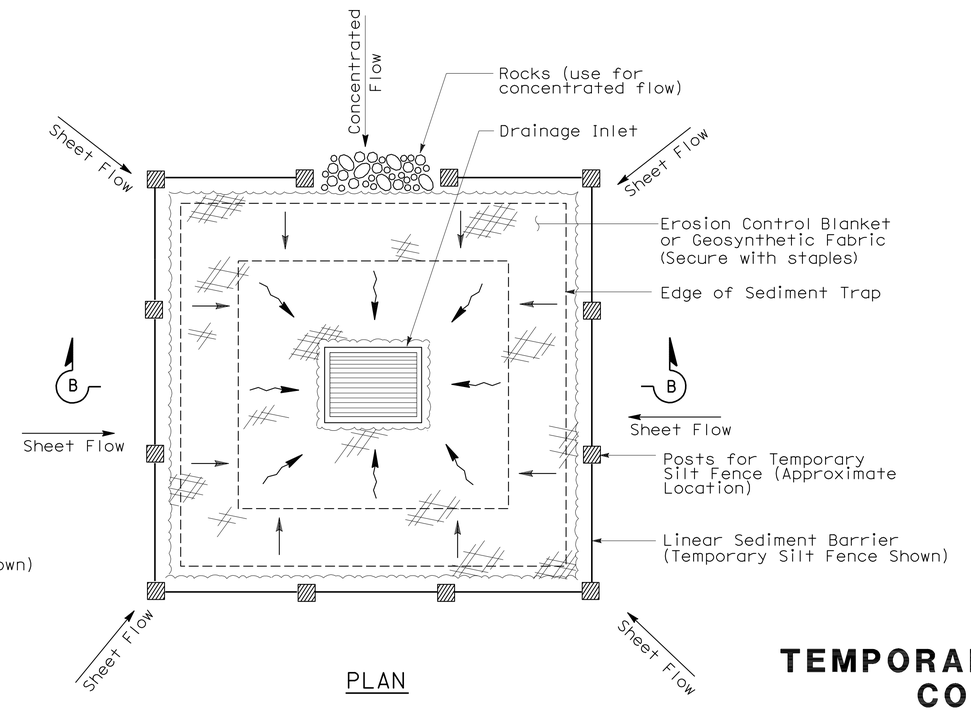

PLAN

TEMPORARY DRAINAGE INLET PROTECTION (TYPE 2) (EXCAVATED SEDIMENT TRAP)

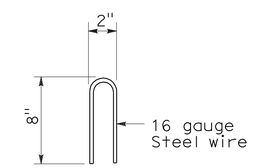

STAPLE DETAIL

STATE OF CALIFORNIA
DEPARTMENT OF TRANSPORTATION

TEMPORARY WATER POLLUTION CONTROL DETAILS (TEMPORARY DRAINAGE INLET PROTECTION)

NO SCALE

NSP T61 DATED AUGUST 15, 2008 SUPPLEMENTS THE STANDARD PLANS BOOK DATED MAY 2006.

NEW STANDARD PLAN NSP T61

2006 NEW STANDARD PLAN NSP T61

7-11-08

DIST	COUNTY	ROUTE	POST MILES TOTAL PROJECT	SHEET NO.	TOTAL SHEETS
05	SCr	1	17.7/18.1	45	47

LICENSED LANDSCAPE ARCHITECT

August 15, 2008
PLANS APPROVAL DATE

The State of California or its officers or agents shall not be responsible for the accuracy or completeness of electronic copies of this plan sheet.

LICENSED LANDSCAPE ARCHITECT — Robert B. Schott — Signature — 11-04-08 Renewal Date — 08-11-08 Date — STATE OF CALIFORNIA

To accompany plans dated 8-29-11

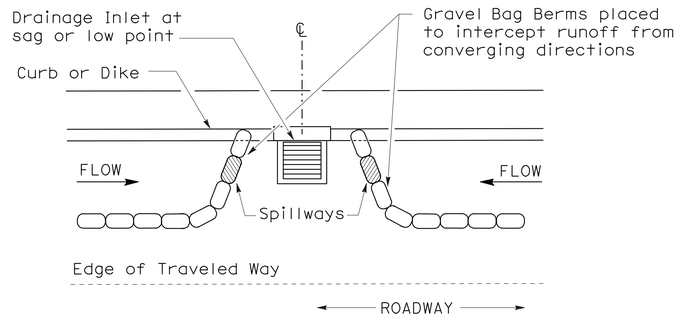

PLAN

CONFIGURATION FOR SAG POINT INLET (GRAVEL BAG BERM)

GRAVEL BAG BERM (TYPE 3A) SPACING TABLE

SLOPE OF ROADWAY (PERCENT)	1 to 3.9	4 to 5.9	6 to 7.9	8 to 10	10+
INTERVAL BETWEEN BERM	100′	75′	50′	25′	12′

For slope of less than 1%, install barriers only if erosion/sediment is prevalent

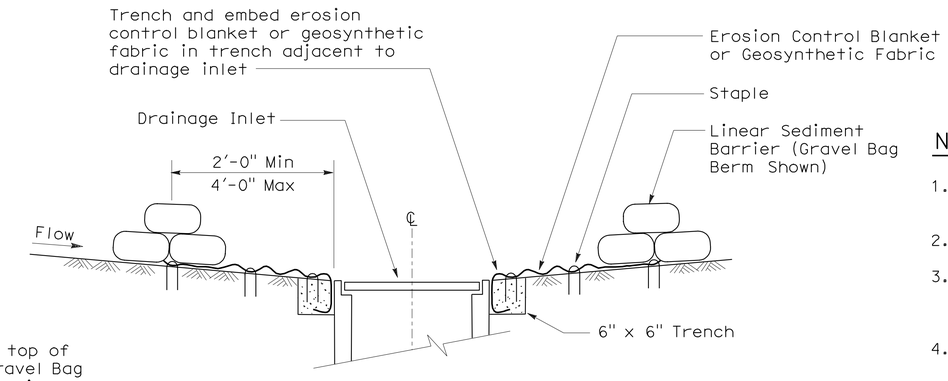

SECTION A-A

NOTES:

1. Place safety cones adjacent to drainage inlet protection.
2. Dimensions may vary to fit field conditions.
3. Install a minimum of 3 gravel bag berms upstream of each drainage inlet to be protected.
4. Position erosion control blanket or geosynthetic fabric at edge of concrete apron and secure in trench.
5. Erosion control blanket or geosynthetic fabric is not required if the area adjacent to the drainage inlet is vegetated or paved.

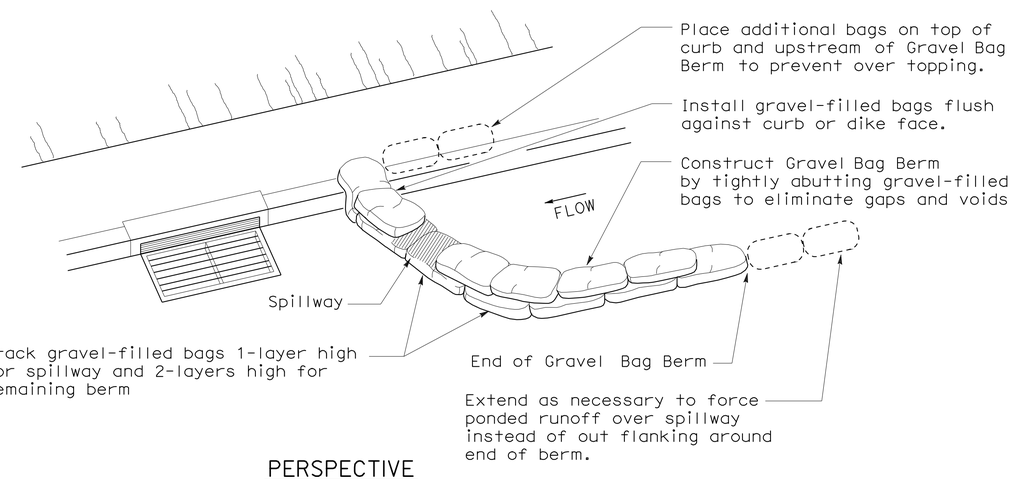

PERSPECTIVE

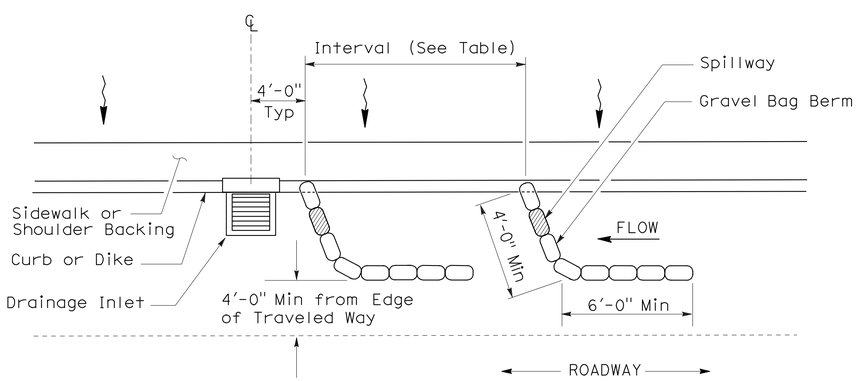

PLAN

TEMPORARY DRAINAGE INLET PROTECTION (TYPE 3A) (GRAVEL BAG BERM)

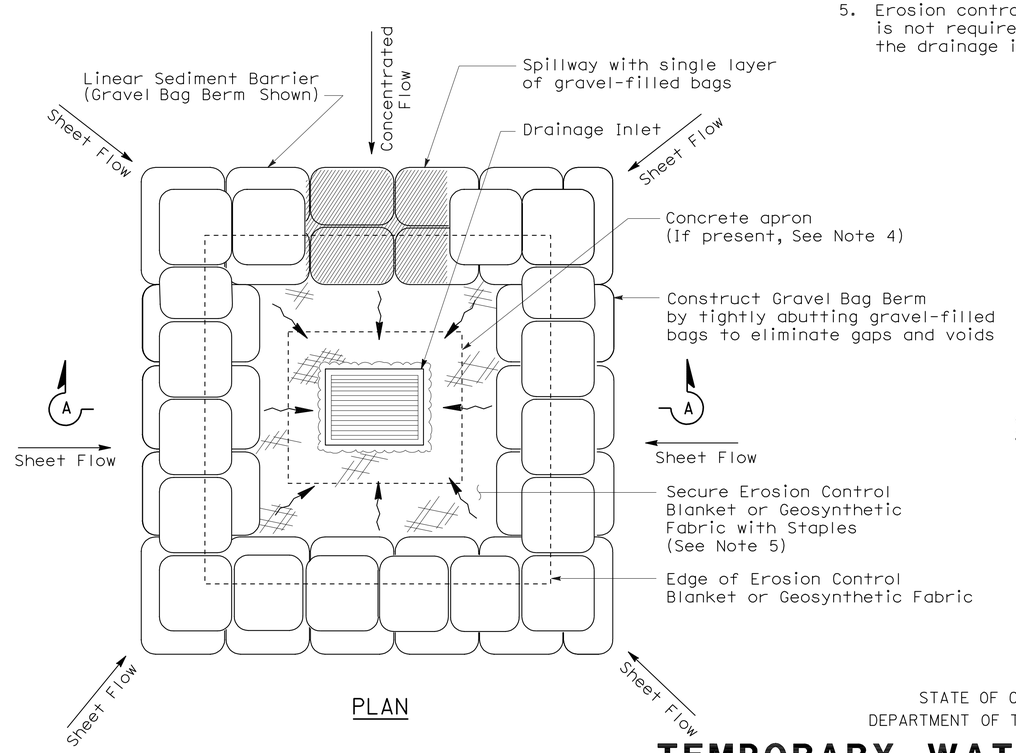

PLAN

TEMPORARY DRAINAGE INLET PROTECTION (TYPE 3B)

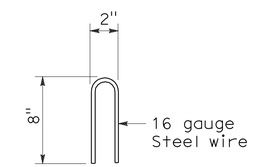

STAPLE DETAIL

STATE OF CALIFORNIA
DEPARTMENT OF TRANSPORTATION

TEMPORARY WATER POLLUTION CONTROL DETAILS (TEMPORARY DRAINAGE INLET PROTECTION)

NO SCALE

NSP T62 DATED AUGUST 15, 2008 SUPPLEMENTS THE STANDARD PLANS BOOK DATED MAY 2006.

NEW STANDARD PLAN NSP T62

2006 NEW STANDARD PLAN NSP T62

7-11-08

DIST	COUNTY	ROUTE	POST MILES TOTAL PROJECT	SHEET NO.	TOTAL SHEETS
05	SCr	1	17.7/18.1	46	47

Robert B Schott
LICENSED LANDSCAPE ARCHITECT

August 15, 2008
PLANS APPROVAL DATE

The State of California or its officers or agents shall not be responsible for the accuracy or completeness of electronic copies of this plan sheet.

LICENSED LANDSCAPE ARCHITECT — Robert B. Schott — 3625 — Signature — 11-04-08 Renewal Date — 08-11-08 Date — STATE OF CALIFORNIA

To accompany plans dated 8-29-11

FLEXIBLE SEDIMENT BARRIER SPACING TABLE

SLOPE OF ROADWAY (PERCENT)	0 to 0.9	1 to 1.9	2 to 2.9	3 to 4	5+
INTERVAL BETWEEN BARRIERS	50′	35′	30′	25′	20′
ANGLE FROM FACE OF CURB	70°	70°	70°	45°	45°
SUGGESTED BARRIER LENGTH	6′	6′	6′	6′	6′

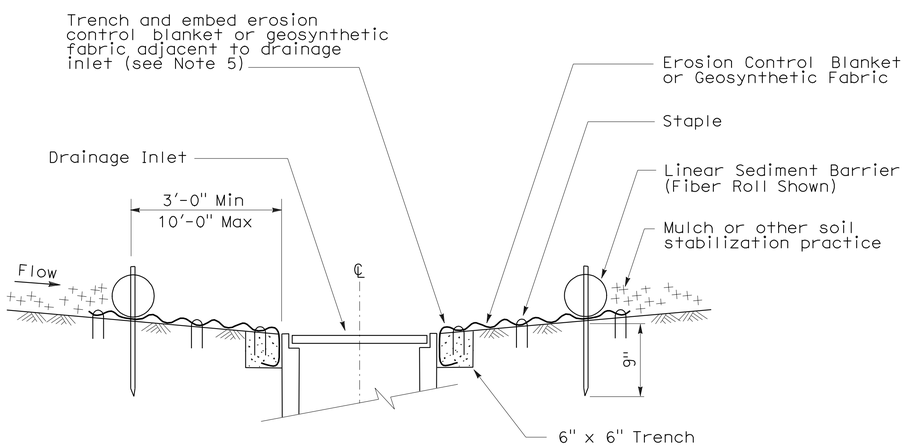

SECTION A-A

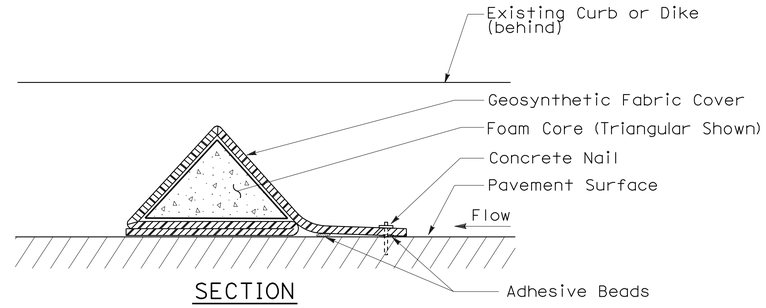

SECTION

FLEXIBLE SEDIMENT BARRIER DETAIL (FOAM BARRIER SHOWN)

NOTES:

1. See Standard Plan T51 for Temporary Silt Fence.
2. Dimensions may vary to fit field conditions.
3. Install a minimum of 3 flexible sediment barriers upstream of each drainage inlet to be protected.
4. Position erosion control blanket or geosynthetic fabric at edge of concrete apron and secure in trench.
5. Erosion control blanket or geosynthetic fabric is not required if the area adjacent to the drainage inlet is vegetated.

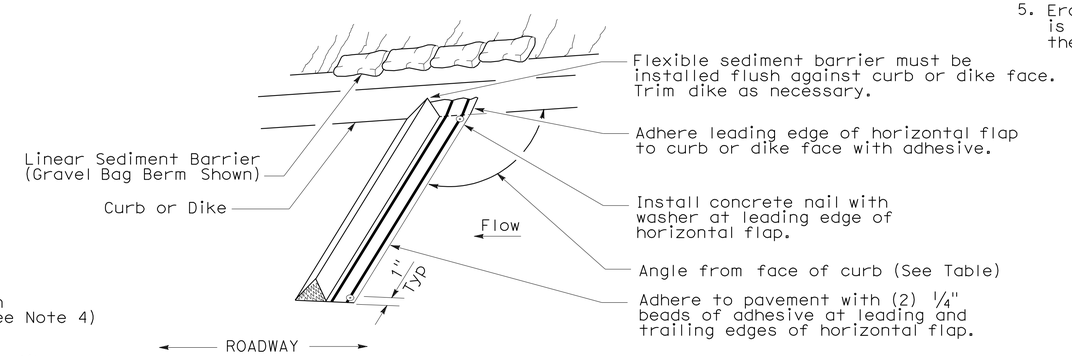

PERSPECTIVE

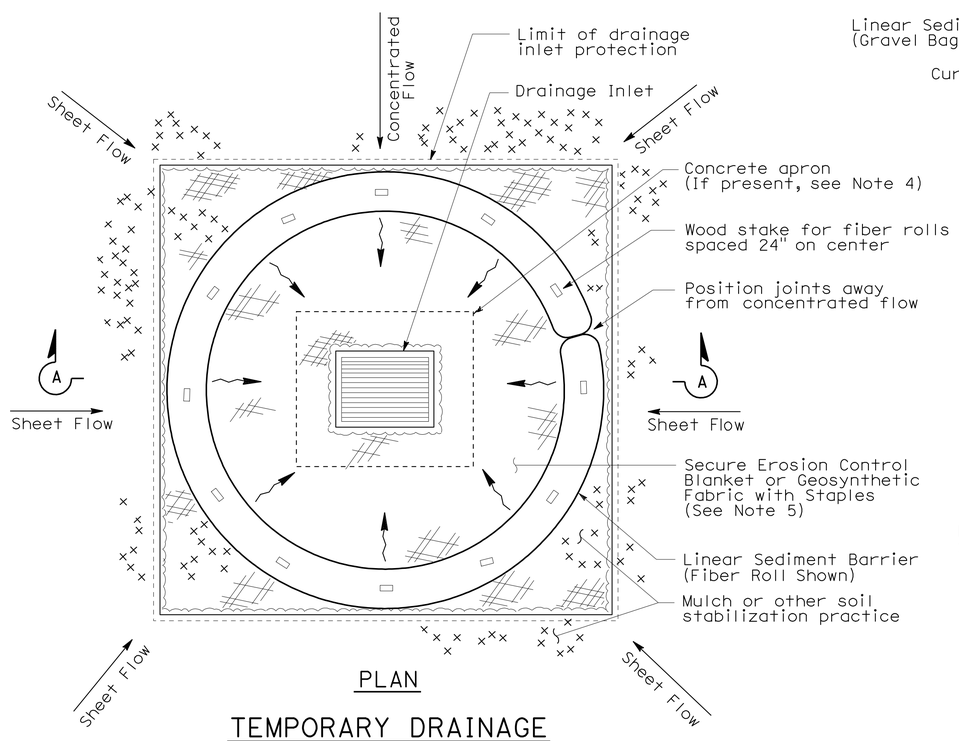

PLAN

TEMPORARY DRAINAGE INLET PROTECTION (TYPE 4A)

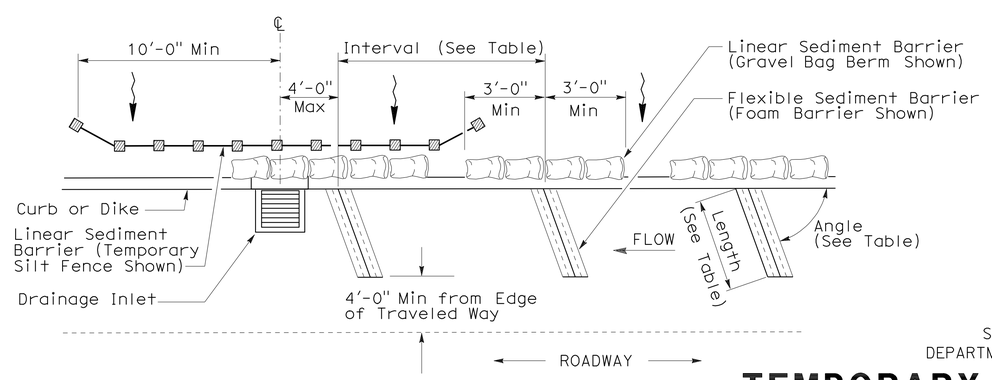

PLAN

TEMPORARY DRAINAGE INLET PROTECTION (TYPE 4B) FLEXIBLE SEDIMENT BARRIER

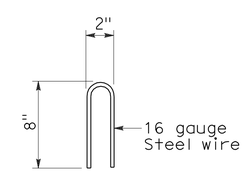

STAPLE DETAIL

STATE OF CALIFORNIA
DEPARTMENT OF TRANSPORTATION

TEMPORARY WATER POLLUTION CONTROL DETAILS (TEMPORARY DRAINAGE INLET PROTECTION)

NO SCALE

NSP T63 DATED AUGUST 15, 2008 SUPPLEMENTS THE STANDARD PLANS BOOK DATED MAY 2006.

NEW STANDARD PLAN NSP T63

2006 NEW STANDARD PLAN NSP T63

7-11-08

DIST	COUNTY	ROUTE	POST MILES TOTAL PROJECT	SHEET NO.	TOTAL SHEETS
05	SCr	1	17.7/18.1	47	47

LICENSED LANDSCAPE ARCHITECT

August 15, 2008
PLANS APPROVAL DATE

LICENSED LANDSCAPE ARCHITECT
Robert B. Schott 3625
Signature
11-04-08
Renewal Date
08-11-08
Date
STATE OF CALIFORNIA

The State of California or its officers or agents shall not be responsible for the accuracy or completeness of electronic copies of this plan sheet.

To accompany plans dated 8-29-11

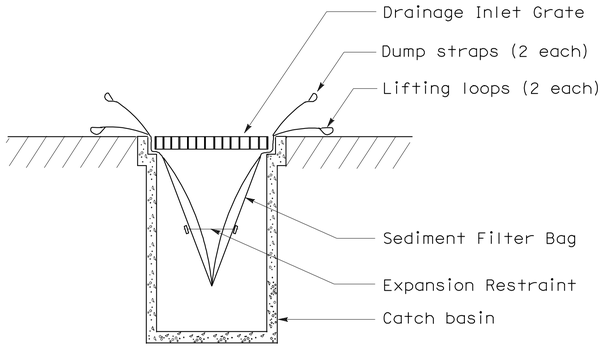

SECTION B-B

SEDIMENT FILTER BAG DETAIL

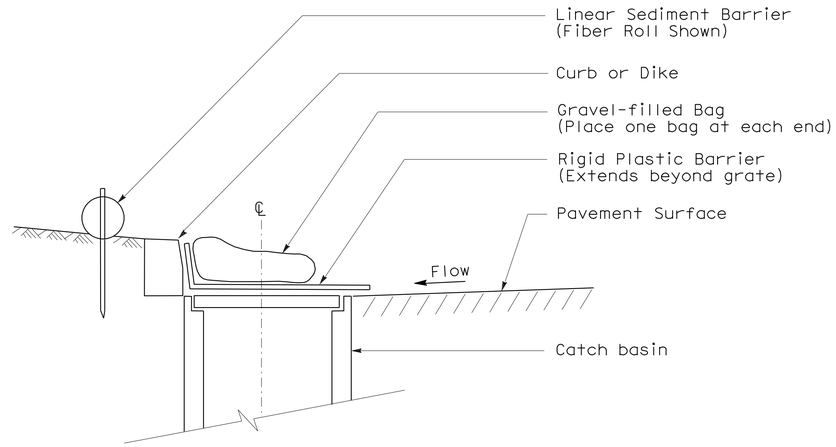

SECTION

TEMPORARY DRAINAGE INLET PROTECTION (TYPE 6A) (CATCH BASIN WITH GRATE)

NOTES:

1. See Standard Plan T51 for Temporary Silt Fence.
2. Dimensions may vary to fit field conditions.

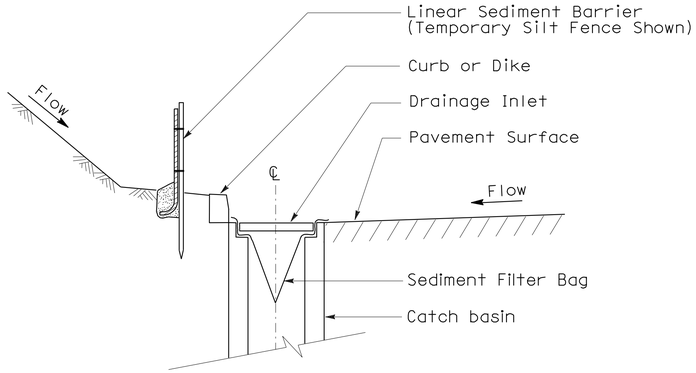

SECTION A-A

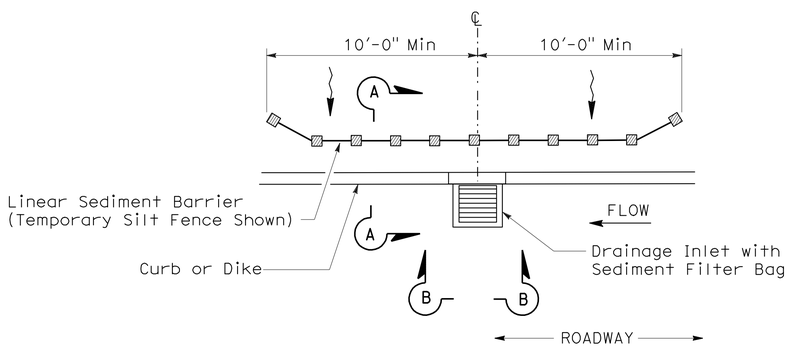

PLAN

TEMPORARY DRAINAGE INLET PROTECTION (TYPE 5) (SEDIMENT FILTER BAG)

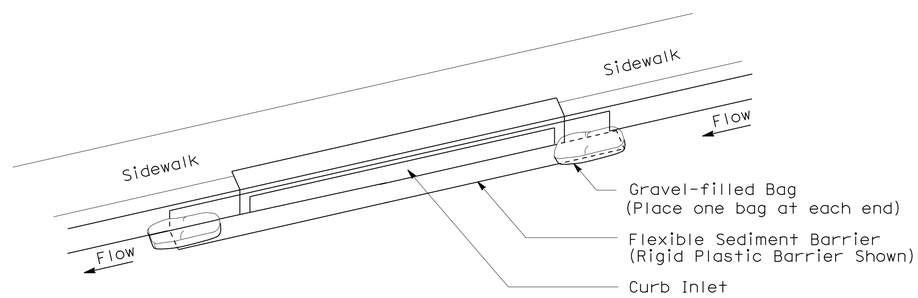

PERSPECTIVE

TEMPORARY DRAINAGE INLET PROTECTION (TYPE 6B) (CURB INLET WITHOUT GRATE)

STATE OF CALIFORNIA
DEPARTMENT OF TRANSPORTATION

TEMPORARY WATER POLLUTION CONTROL DETAILS (TEMPORARY DRAINAGE INLET PROTECTION)

NO SCALE

NSP T64 DATED AUGUST 15, 2008 SUPPLEMENTS
THE STANDARD PLANS BOOK DATED MAY 2006.

NEW STANDARD PLAN NSP T64

2006 NEW STANDARD PLAN NSP T64