ACNH-Q101(191)E

Dist	COUNTY	ROUTE	POST MILES TOTAL PROJECT	SHEET No.	TOTAL SHEETS
05	Mon	101	86.6/R87.7	1	43

INDEX OF PLANS

SHEET No.	DESCRIPTION
1	TITLE AND LOCATION MAP
2	PLANT LIST
3-7	PLANTING PLANS
8-12	IRRIGATION REMOVAL PLANS
13-17	IRRIGATION PLANS
18-21	SPRINKLER SCHEDULE, LANDSCAPE DETAILS, AND QUANTITIES
22-23	IRRIGATION QUANTITIES
24	TELEPHONE SERVICE (IRRIGATION)
25	CONSTRUCTION AREA SIGNS
26-43	REVISED AND NEW STANDARD PLANS

THE STANDARD PLANS LIST APPLICABLE TO THIS CONTRACT IS INCLUDED IN THE NOTICE TO BIDDERS AND SPECIAL PROVISIONS BOOK.

STATE OF CALIFORNIA

DEPARTMENT OF TRANSPORTATION

PROJECT PLANS FOR CONSTRUCTION ON

STATE HIGHWAY

IN MONTEREY COUNTY
IN SALINAS
FROM 0.2 MILE SOUTH OF JUNCTION ROUTE 68/101 SEPARATION
TO 0.2 MILE SOUTH OF SHERWOOD DRIVE OVERCROSSING

TO BE SUPPLEMENTED BY STANDARD PLANS DATED MAY 2006

LOCATION MAP

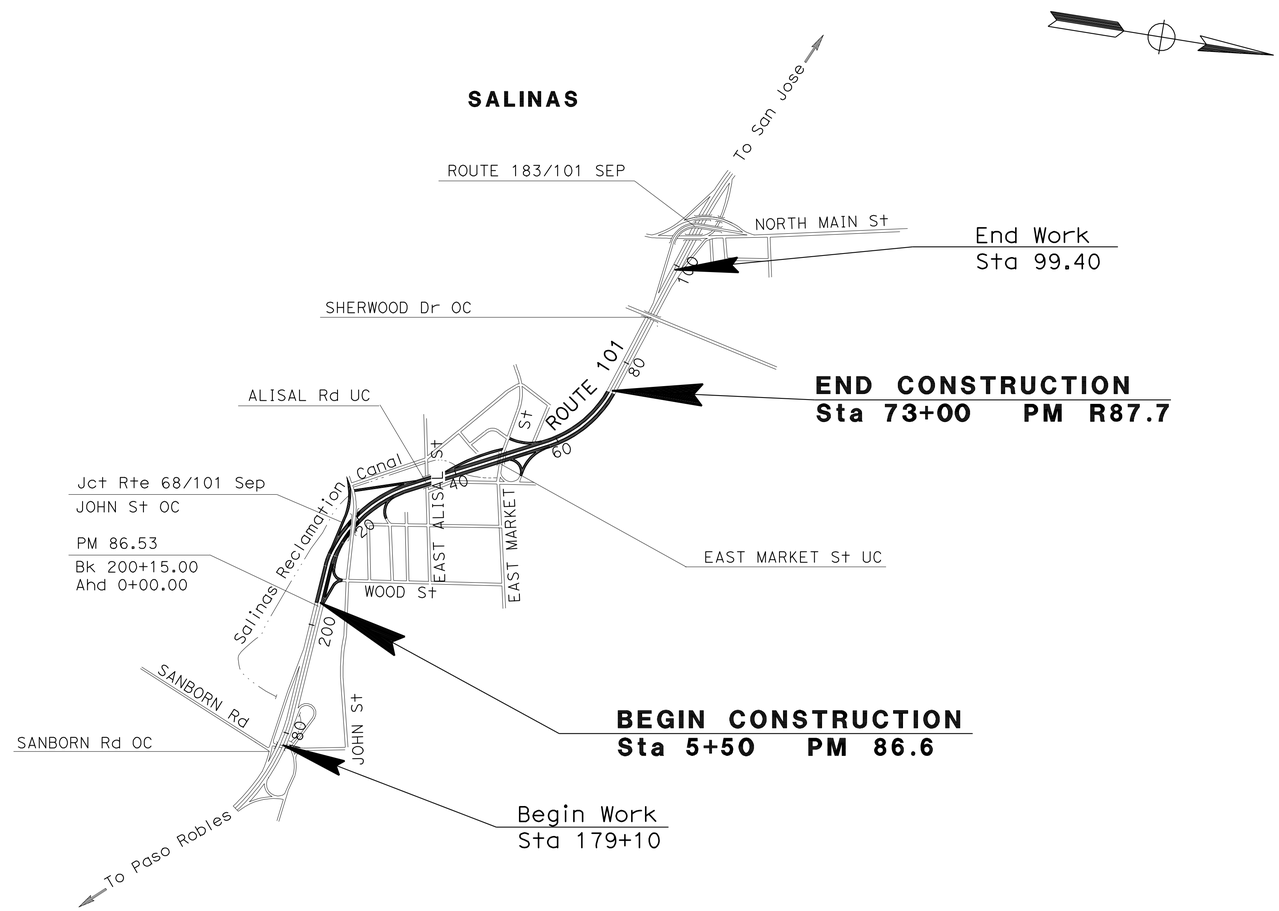

NO SCALE

THE CONTRACTOR SHALL POSSESS THE CLASS (OR CLASSES) OF LICENSE AS SPECIFIED IN THE "NOTICE TO BIDDERS."

LICENSED LANDSCAPE ARCHITECT

September 13, 2010
PLANS APPROVAL DATE

LICENSED LANDSCAPE ARCHITECT Patrick K Borger 4362 Signature 11-30-2010 Renewal Date 8-3-2010 Date STATE OF CALIFORNIA

THE STATE OF CALIFORNIA OR ITS OFFICERS OR AGENTS SHALL NOT BE RESPONSIBLE FOR THE ACCURACY OR COMPLETENESS OF SCANNED COPIES OF THIS PLAN SHEET.

CONTRACT No.	05-0R2004
PROJECT ID	0500000347

PROJECT MANAGER: JOHN LUCHETTA
SENIOR LANDSCAPE ARCHITECT: DENNIS J. REEVES

LAST REVISION 08-03-10 | DATE PLOTTED => 26-OCT-2010 | TIME PLOTTED => 10:49

Dist	COUNTY	ROUTE	POST MILES TOTAL PROJECT	SHEET No.	TOTAL SHEETS
05	Mon	101	86.6/R87.7	2	43

LICENSED LANDSCAPE ARCHITECT

9-13-10
PLANS APPROVAL DATE

LICENSED LANDSCAPE ARCHITECT PATRICK K. BOLGER No. 2522 Exp. Date 11-30-2010 Renewal Date 8-3-2010 Date STATE OF CALIFORNIA

THE STATE OF CALIFORNIA OR ITS OFFICERS OR AGENTS SHALL NOT BE RESPONSIBLE FOR THE ACCURACY OR COMPLETENESS OF SCANNED COPIES OF THIS PLAN SHEET.

ABBREVIATIONS

AMEND — amendment
B & B — balled and burlapped
Dia — diameter
EA — each
LB — pound
Oz — ounce
Ft — foot/feet
SQFT — square feet
SQYD — square yard
CF — cubic feet
Max — maximum
Min — minimum
NCN — no common name
No. — number
Pkt — packet
PLT ESTB — plant establishment
Pvmt — pavement
R/W — right of way
SF — state furnished
TRVD — traveled

PLANT LIST AND PLANTING SPECIFICATIONS

PLANT GROUP	PLANT No.	SYMBOL	BOTANICAL NAME	COMMON NAME	SIZE	QUANTITY EACH	HOLE SIZE (INCH) Dia	HOLE SIZE (INCH) DEPTH	BASIN TYPE	IRON SULFATE	SOIL AMEND	COMMERCIAL FERTILIZER (1) PLANTING	COMMERCIAL FERTILIZER (1) PLT ESTB	BASIN MULCH	STAKING	PLANTING LIMITS MINIMUM DISTANCE (Ft) FROM TRVD WAY	Pvmt	FENCE	WALL	PAVED DITCH	EARTH DITCH	ON CENTER (Ft)	REMARKS
B	1		NERIUM OLEANDER 'HAWAII'	OLEANDER	No. 5	194	24	18	I I	-	-	2 Pkt	7 Oz	2 CF	-	-	10	-	10	10	12	6	SHRUB (3)
	2		RHAMNUS CALIFORNICA	COFFEEBERRY	No. 5	85	24	18	I I	-	-	2 Pkt	7 Oz	2 CF	-	-	15	-	10	10	12	6	SHRUB (3)
H	3		CARPOBROTUS EDULIS	ICE PLANT	CUTTINGS	850	(7)	(7)	-	-	-	-	-	-	-	-	6	6	6	6	8	1.5	GROUND COVER
U	4		ACER MACROPHYLLUM	BIG-LEAFED MAPLE	No. 15	12	30	24	I I	-	-	4 Pkt	21 Oz	4 CF	(6)	32	-	20	20	20	22	(4)	TREE (3)
	5		ALNUS RHOMBIFOLIA	WHITE ALDER	No. 15	18	30	24	I I	-	-	4 Pkt	21 Oz	4 CF	(6)	32	-	10	10	20	12	(4)	TREE (3)
	6		CALOCEDRUS DECURRENS	INCENSE CEDAR	No. 15	65	30	24	I I	-	-	4 Pkt	21 Oz	4 CF	(6)	32	-	10	10	20	22	(4)	TREE (3)
	7		CEDRUS DEODARA	DEODAR CEDAR	No. 15	33	30	24	I I	-	-	4 Pkt	21 Oz	4 CF	(6)	32	-	15	20	20	22	(4)	TREE (3)
	8		CUPRESSUS MACROCARPA	MONTEREY CYPRESS	No. 15	52	30	24	I I	-	-	4 Pkt	21 Oz	4 CF	(6)	32	-	20	20	20	22	(4)	TREE (3)
	9		PLATANUS RACEMOSA	CALIFORNIA SYCAMORE	No. 15	62	30	24	I I	-	-	4 Pkt	21 Oz	4 CF	(6)	40	-	20	20	10	22	(4)	TREE (3)
	10		POPULUS FREMONTII	WESTERN COTTONWOOD	No. 15	34	30	24	I I	-	-	4 Pkt	21 Oz	4 CF	(6)	32	-	20	20	10	12	(4)	TREE (3)
	11		QUERCUS VIRGINIANA	SOUTHERN LIVE OAK	No. 15	40	30	24	I I	-	-	4 Pkt	21 Oz	4 CF	(6)	32	-	15	15	15	17	(4)	TREE (3)
	12		SEQUOIA SEMPERVIRENS 'APTOS BLUE'	COAST REDWOOD	No. 15	23	30	24	I I	-	-	4 Pkt	21 Oz	4 CF	(6)	32	-	20	20	20	22	(4)	TREE (3)
	13		TRISTANIA CONFERTA	BRISBANE BOX	No. 15	56	30	24	I I	-	-	4 Pkt	21 Oz	4 CF	(6)	32	7	5	-	-	-	(4)	TREE (3)

APPLICABLE WHEN CIRCLED:

(1) - Quantities shown are "per plant" unless shown as SQFT or SQYD application rates.
2 - Sufficient to receive root ball.
(3) - Root protector required.
(4) - As shown on plans.
5 - Unless otherwise shown on plans.
(6) - Required.
(7) - See Standard Specifications.

LEGEND

EXISTING TREE PLANTING
EXISTING GROUND COVER (ICE PLANT)
REMOVE TREE AND STAKES
REMOVE STUMP AND LOG
REMOVE SIGN POST AND FOOTING
MAINTENANCE VEHICLE PULLOUT (MVP)
MULCH AREA, (6" DEPTH)

NOTE:

Underlined portions of botanical name indicate abbreviations used on Planting Plans.

PLANT LIST
PL-1

STATE OF CALIFORNIA - DEPARTMENT OF TRANSPORTATION
Caltrans LANDSCAPE ARCHITECTURE

SENIOR LANDSCAPE ARCHITECT: DENNIS REEVES
CALCULATED-DESIGNED BY: PATRICK BOLGER
CHECKED BY: DAVID EMERSON
REVISED BY / DATE REVISED

LAST REVISION 08-03-10 | DATE PLOTTED => 06-OCT-2010 | TIME PLOTTED => 13:20

Dist	COUNTY	ROUTE	POST MILES TOTAL PROJECT	SHEET No.	TOTAL SHEETS
05	Mon	101	86.6/R87.7	3	43

LICENSED LANDSCAPE ARCHITECT

9-13-10
PLANS APPROVAL DATE

LICENSED LANDSCAPE ARCHITECT
Patrick Bolger-Hess
Signature
11-30-2010
Renewal Date
8-3-2010
Date
STATE OF CALIFORNIA

THE STATE OF CALIFORNIA OR ITS OFFICERS OR AGENTS SHALL NOT BE RESPONSIBLE FOR THE ACCURACY OR COMPLETENESS OF SCANNED COPIES OF THIS PLAN SHEET.

NOTE:

FOR ACCURATE RIGHT OF WAY DATA, CONTACT RIGHT OF WAY ENGINEERING AT THE DISTRICT OFFICE.

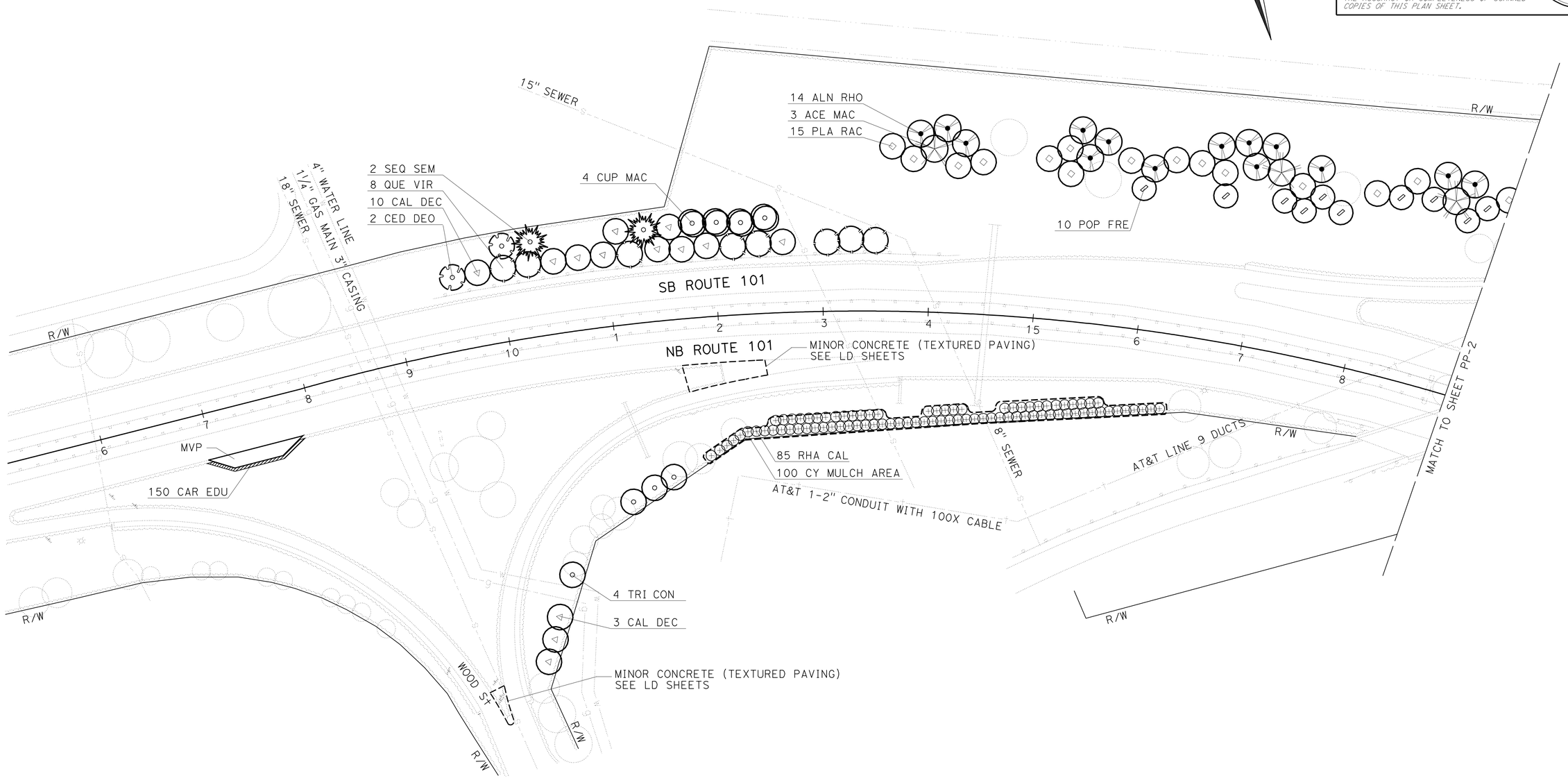

THIS PLAN ACCURATE FOR PLANTING WORK ONLY.

PLANTING PLAN

SCALE: 1" = 50'

PP-1

STATE OF CALIFORNIA - DEPARTMENT OF TRANSPORTATION
Caltrans® LANDSCAPE ARCHITECTURE

SENIOR LANDSCAPE ARCHITECT: DENNIS REEVES

CALCULATED-DESIGNED BY: PATRICK BOLGER
CHECKED BY: DAVID EMERSON

REVISED BY
DATE REVISED

LAST REVISION 08-03-10
DATE PLOTTED => 06-OCT-2010
TIME PLOTTED => 13:20

Dist	COUNTY	ROUTE	POST MILES TOTAL PROJECT	SHEET No.	TOTAL SHEETS
05	Mon	101	86.6/R87.7	4	43

LICENSED LANDSCAPE ARCHITECT

9-13-10
PLANS APPROVAL DATE

LICENSED LANDSCAPE ARCHITECT
Patrick Bolger
No. 3471
11-30-2010
Expiration Date
8-3-2010
Date
STATE OF CALIFORNIA

THE STATE OF CALIFORNIA OR ITS OFFICERS OR AGENTS SHALL NOT BE RESPONSIBLE FOR THE ACCURACY OR COMPLETENESS OF SCANNED COPIES OF THIS PLAN SHEET.

NOTE:

FOR ACCURATE RIGHT OF WAY DATA, CONTACT RIGHT OF WAY ENGINEERING AT THE DISTRICT OFFICE.

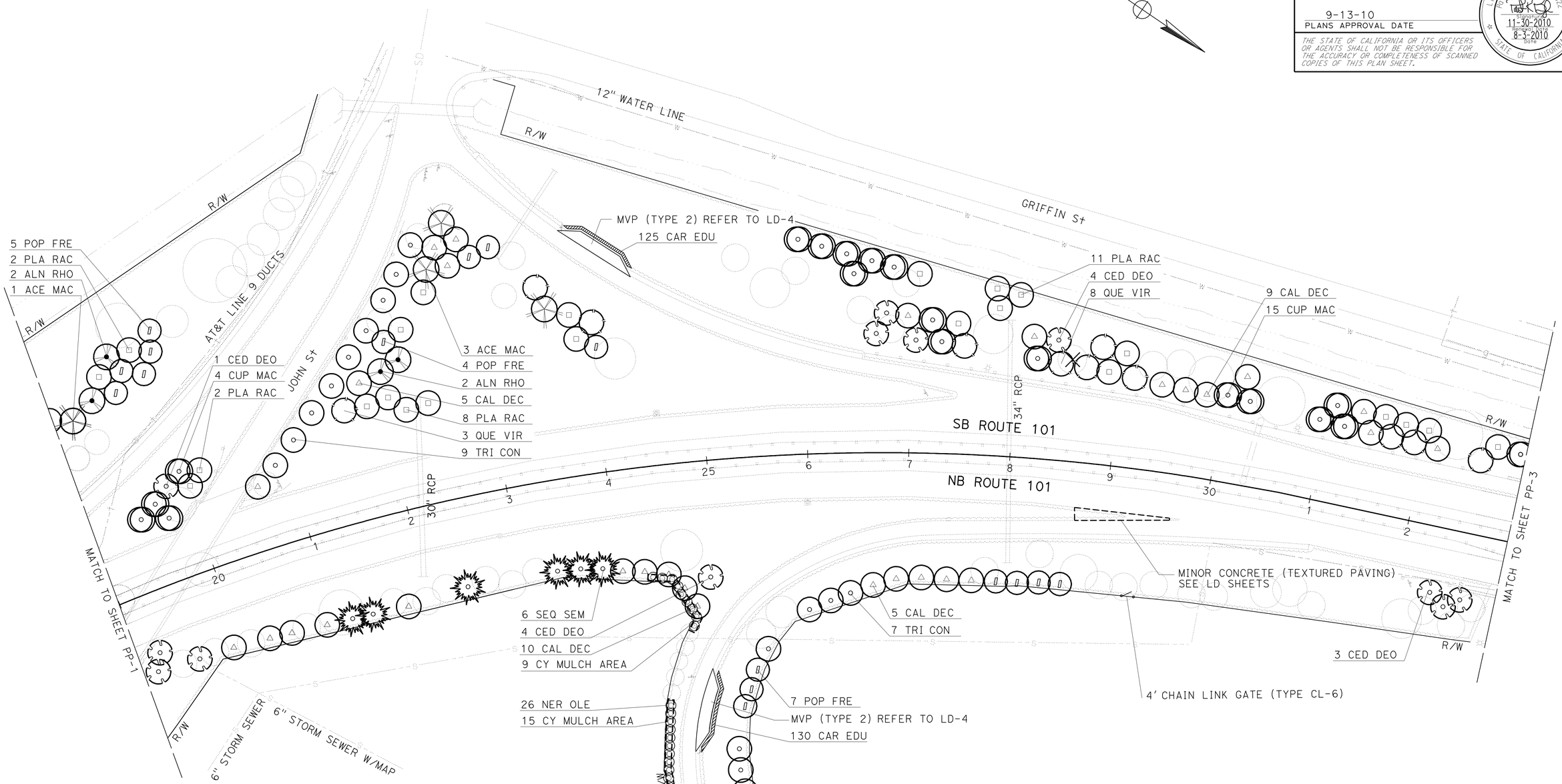

THIS PLAN ACCURATE FOR PLANTING WORK ONLY.

PLANTING PLAN

SCALE: 1" = 50'

PP-2

STATE OF CALIFORNIA - DEPARTMENT OF TRANSPORTATION
Caltrans® LANDSCAPE ARCHITECTURE

SENIOR LANDSCAPE ARCHITECT: DENNIS REEVES
CALCULATED-DESIGNED BY: PATRICK BOLGER
CHECKED BY: DAVID EMERSON
REVISED BY
DATE REVISED

LAST REVISION 08-03-10
DATE PLOTTED => 06-OCT-2010
TIME PLOTTED => 13:21

Dist	COUNTY	ROUTE	POST MILES TOTAL PROJECT	SHEET No.	TOTAL SHEETS
05	Mon	101	86.6/R87.7	5	43

LICENSED LANDSCAPE ARCHITECT

9-13-10
PLANS APPROVAL DATE

LICENSED LANDSCAPE ARCHITECT
Patrick Bolger-#2?
Registered Date
11-30-2010
Renewal Date
8-3-2010
Date
STATE OF CALIFORNIA

THE STATE OF CALIFORNIA OR ITS OFFICERS OR AGENTS SHALL NOT BE RESPONSIBLE FOR THE ACCURACY OR COMPLETENESS OF SCANNED COPIES OF THIS PLAN SHEET.

NOTE:

FOR ACCURATE RIGHT OF WAY DATA, CONTACT RIGHT OF WAY ENGINEERING AT THE DISTRICT OFFICE.

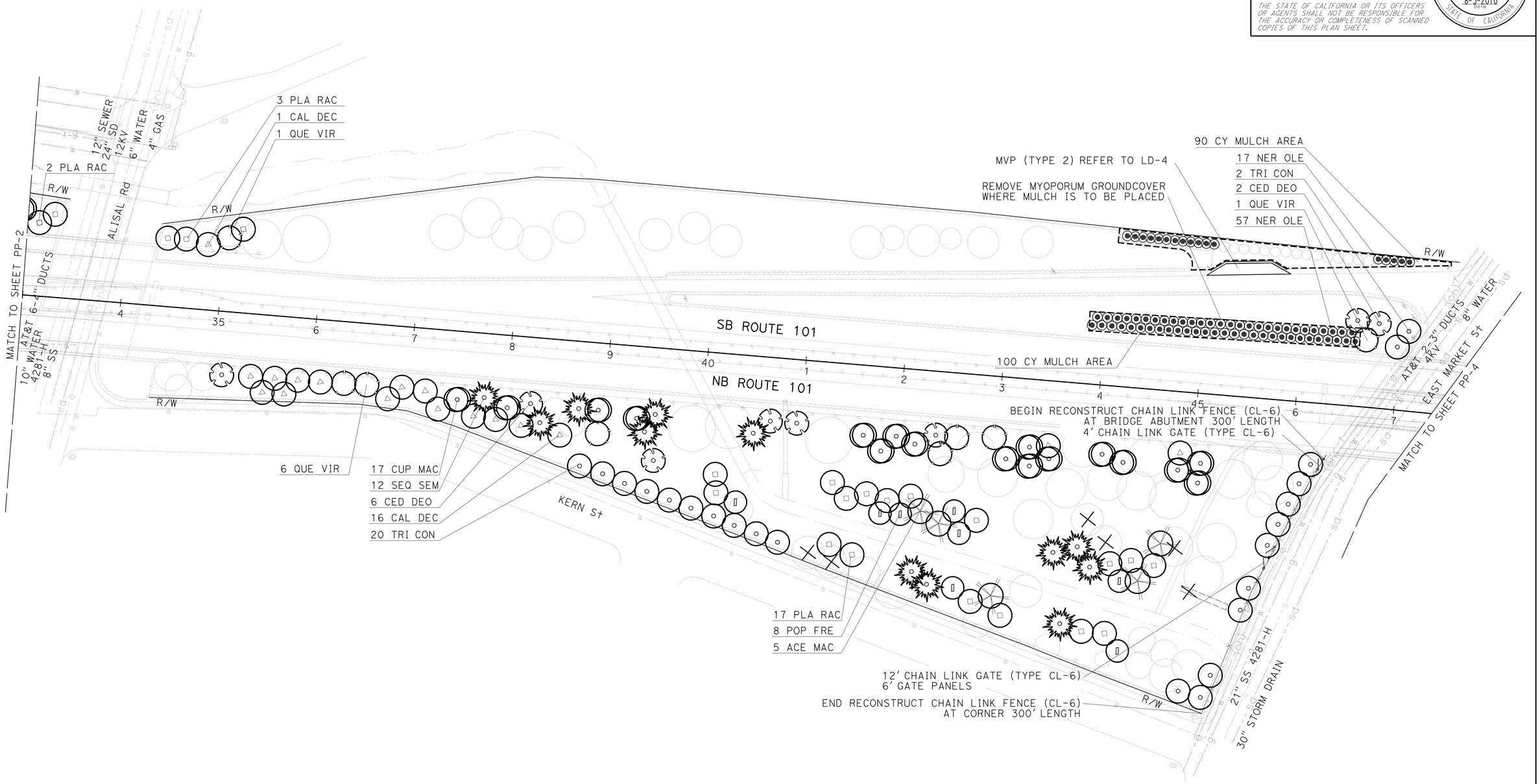

THIS PLAN ACCURATE FOR PLANTING WORK ONLY.

PLANTING PLAN

SCALE: 1" = 50'

PP-3

REVISED BY	DATE REVISED
PATRICK BOLGER	DAVID EMERSON

CALCULATED-DESIGNED BY
CHECKED BY

SENIOR LANDSCAPE ARCHITECT
DENNIS REEVES

STATE OF CALIFORNIA - DEPARTMENT OF TRANSPORTATION
Caltrans® LANDSCAPE ARCHITECTURE

LAST REVISION 08-03-10
DATE PLOTTED => 06-OCT-2010
TIME PLOTTED => 13:21

Dist	COUNTY	ROUTE	POST MILES TOTAL PROJECT	SHEET No.	TOTAL SHEETS
05	Mon	101	86.6/R87.7	6	43

LICENSED LANDSCAPE ARCHITECT

9-13-10
PLANS APPROVAL DATE

THE STATE OF CALIFORNIA OR ITS OFFICERS OR AGENTS SHALL NOT BE RESPONSIBLE FOR THE ACCURACY OR COMPLETENESS OF SCANNED COPIES OF THIS PLAN SHEET.

LICENSED LANDSCAPE ARCHITECT
PATRICK K. BOLGER
No. 3022
Exp. 12-31-10
11-30-2010
Renewal Date
8-3-2010
Date
STATE OF CALIFORNIA

NOTE:

FOR ACCURATE RIGHT OF WAY DATA, CONTACT RIGHT OF WAY ENGINEERING AT THE DISTRICT OFFICE.

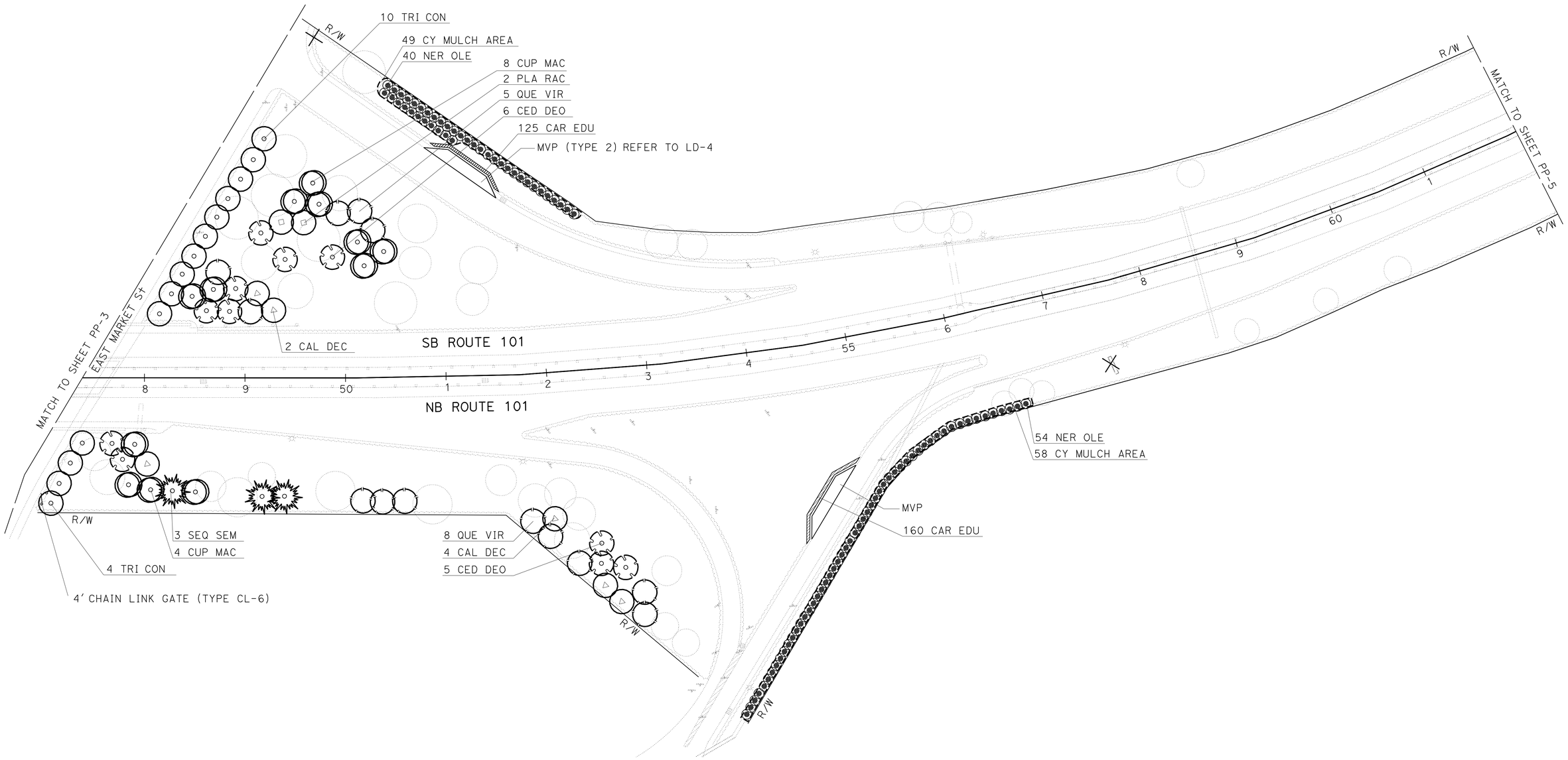

THIS PLAN ACCURATE FOR PLANTING WORK ONLY.

PLANTING PLAN

SCALE: 1" = 50'

PP-4

STATE OF CALIFORNIA - DEPARTMENT OF TRANSPORTATION
Caltrans® LANDSCAPE ARCHITECTURE

SENIOR LANDSCAPE ARCHITECT: DENNIS REEVES
CALCULATED-DESIGNED BY: PATRICK BOLGER
CHECKED BY: DAVID EMERSON
REVISED BY
DATE REVISED

LAST REVISION 08-03-10
DATE PLOTTED => 06-OCT-2010
TIME PLOTTED => 13:21

Dist	COUNTY	ROUTE	POST MILES TOTAL PROJECT	SHEET No.	TOTAL SHEETS
05	Mon	101	86.6/R87.7	7	43

LICENSED LANDSCAPE ARCHITECT

9-13-10
PLANS APPROVAL DATE

THE STATE OF CALIFORNIA OR ITS OFFICERS OR AGENTS SHALL NOT BE RESPONSIBLE FOR THE ACCURACY OR COMPLETENESS OF SCANNED COPIES OF THIS PLAN SHEET.

LICENSED LANDSCAPE ARCHITECT
PATRICK A. BOLGER
No. 3025
11-30-2010
Renewal Date
8-3-2010
Date
STATE OF CALIFORNIA

NOTE:

FOR ACCURATE RIGHT OF WAY DATA, CONTACT RIGHT OF WAY ENGINEERING AT THE DISTRICT OFFICE.

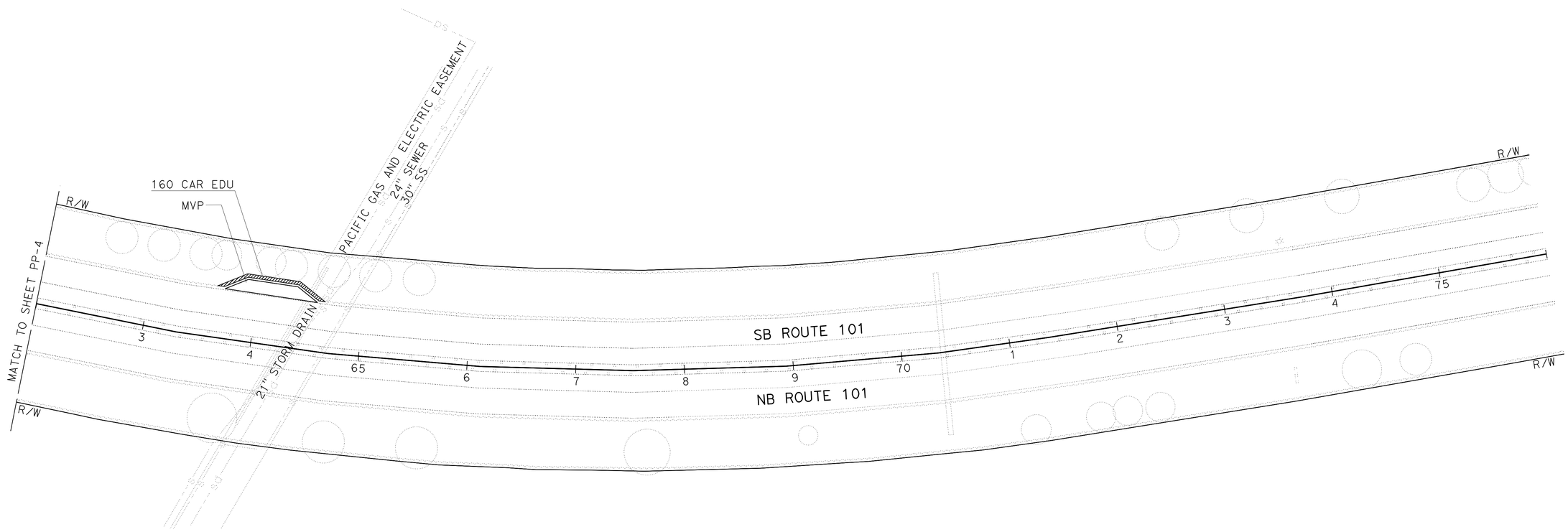

THIS PLAN ACCURATE FOR PLANTING WORK ONLY.

PLANTING PLAN
SCALE: 1" = 50'

PP-5

STATE OF CALIFORNIA - DEPARTMENT OF TRANSPORTATION
Caltrans® LANDSCAPE ARCHITECTURE

SENIOR LANDSCAPE ARCHITECT: DENNIS REEVES
CALCULATED-DESIGNED BY: PATRICK BOLGER
CHECKED BY: DAVID EMERSON
REVISED BY
DATE REVISED

LAST REVISION 08-03-10
DATE PLOTTED => 06-OCT-2010
TIME PLOTTED => 13:21

Dist	COUNTY	ROUTE	POST MILES TOTAL PROJECT	SHEET No.	TOTAL SHEETS
05	Mon	101	86.6/R87.7	8	43

LICENSED LANDSCAPE ARCHITECT

9-13-10
PLANS APPROVAL DATE

LICENSED LANDSCAPE ARCHITECT
Patrick Bolger
No. 2422
11-30-2010
Expiration Date
8-3-2010
Date
STATE OF CALIFORNIA

THE STATE OF CALIFORNIA OR ITS OFFICERS OR AGENTS SHALL NOT BE RESPONSIBLE FOR THE ACCURACY OR COMPLETENESS OF SCANNED COPIES OF THIS PLAN SHEET.

NOTE:

FOR ACCURATE RIGHT OF WAY DATA, CONTACT RIGHT OF WAY ENGINEERING AT THE DISTRICT OFFICE.

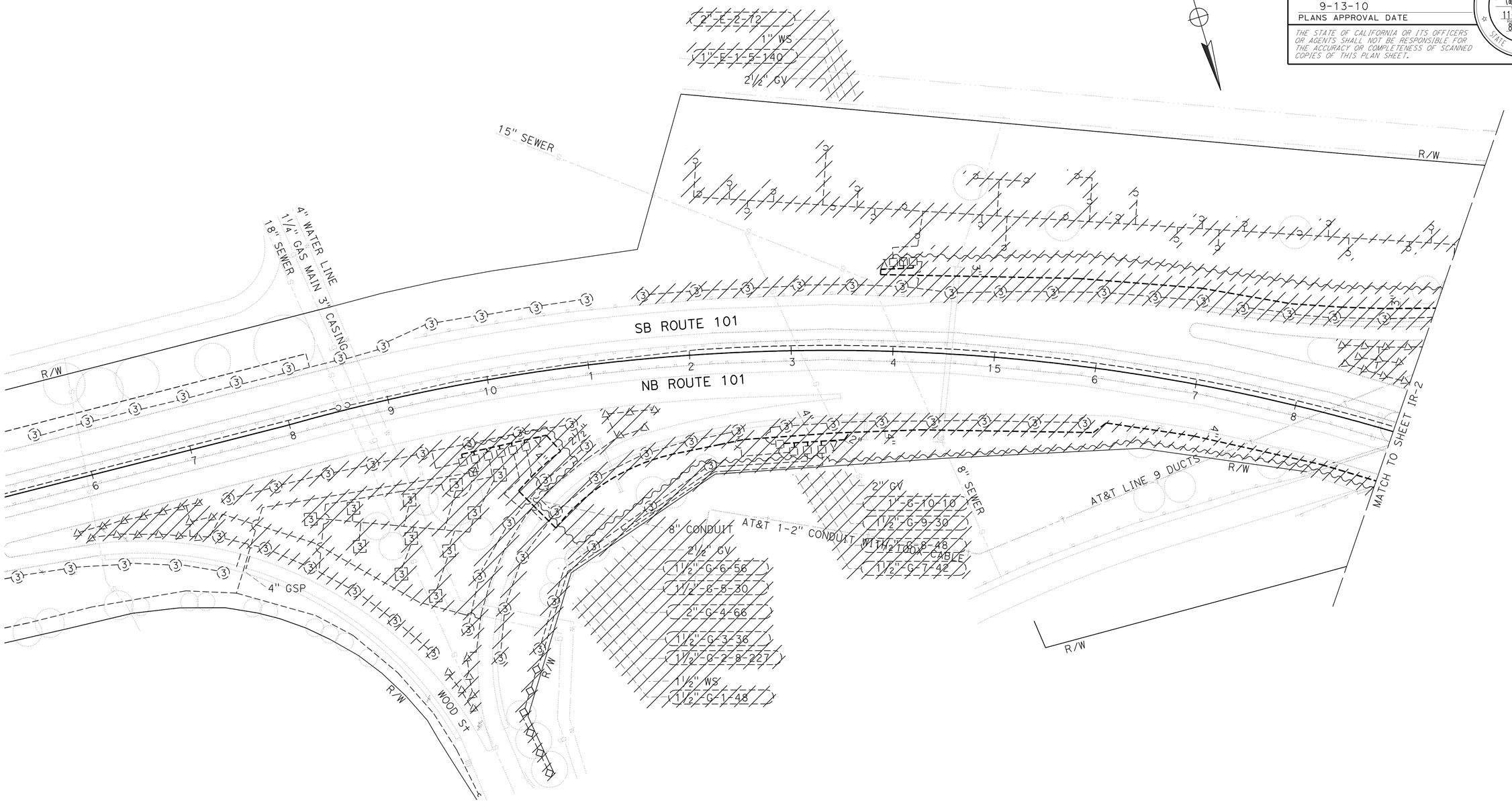

THIS PLAN ACCURATE FOR IRRIGATION REMOVAL WORK ONLY.

IRRIGATION REMOVAL PLAN

SCALE: 1" = 50'

IR-1

STATE OF CALIFORNIA - DEPARTMENT OF TRANSPORTATION
Caltrans® LANDSCAPE ARCHITECTURE

SENIOR LANDSCAPE ARCHITECT: DENNIS REEVES

CALCULATED-DESIGNED BY: PATRICK BOLGER
CHECKED BY: DAVID EMERSON

REVISED BY
DATE REVISED

LAST REVISION: DATE PLOTTED => 06-OCT-2010
08-03-10 TIME PLOTTED => 13:21

Dist	COUNTY	ROUTE	POST MILES TOTAL PROJECT	SHEET No.	TOTAL SHEETS
05	Mon	101	86.6/R87.7	9	43

LICENSED LANDSCAPE ARCHITECT

9-13-10
PLANS APPROVAL DATE

LICENSED LANDSCAPE ARCHITECT
Patrick Bolger
Date 11-30-2010
Expiration Date 8-3-2010
STATE OF CALIFORNIA

THE STATE OF CALIFORNIA OR ITS OFFICERS OR AGENTS SHALL NOT BE RESPONSIBLE FOR THE ACCURACY OR COMPLETENESS OF SCANNED COPIES OF THIS PLAN SHEET.

NOTE:

FOR ACCURATE RIGHT OF WAY DATA, CONTACT RIGHT OF WAY ENGINEERING AT THE DISTRICT OFFICE.

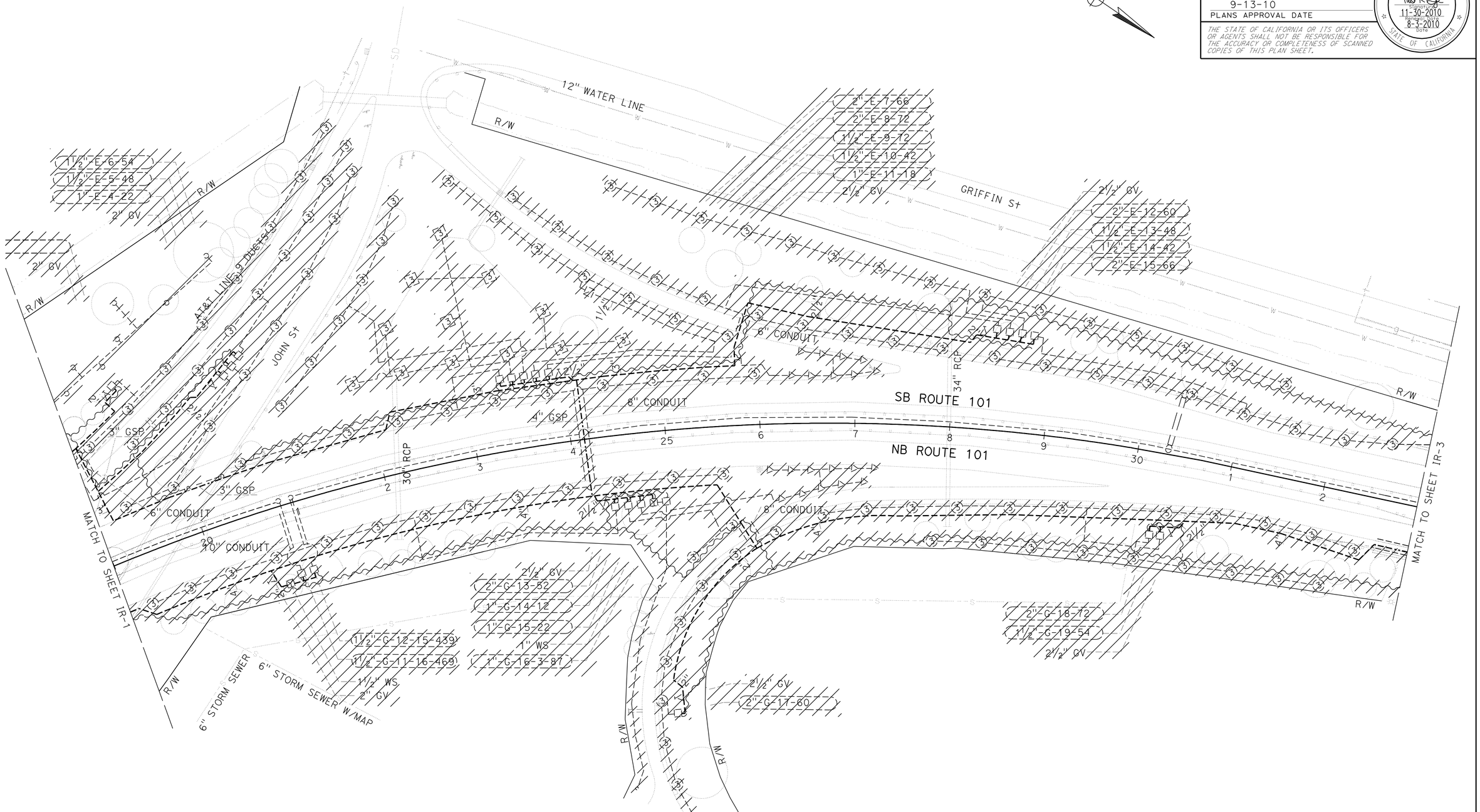

THIS PLAN ACCURATE FOR IRRIGATION REMOVAL WORK ONLY.

IRRIGATION REMOVAL PLAN

SCALE: 1" = 50'

IR-2

STATE OF CALIFORNIA - DEPARTMENT OF TRANSPORTATION
Caltrans LANDSCAPE ARCHITECTURE

SENIOR LANDSCAPE ARCHITECT: DENNIS REEVES
CALCULATED-DESIGNED BY: PATRICK BOLGER
CHECKED BY: DAVID EMERSON
REVISED BY
DATE REVISED

LAST REVISION 08-03-10
DATE PLOTTED => 06-OCT-2010
TIME PLOTTED => 13:21

Dist	COUNTY	ROUTE	POST MILES TOTAL PROJECT	SHEET No.	TOTAL SHEETS
05	Mon	101	86.6/R87.7	10	43

LICENSED LANDSCAPE ARCHITECT

9-13-10
PLANS APPROVAL DATE

THE STATE OF CALIFORNIA OR ITS OFFICERS OR AGENTS SHALL NOT BE RESPONSIBLE FOR THE ACCURACY OR COMPLETENESS OF SCANNED COPIES OF THIS PLAN SHEET.

LICENSED LANDSCAPE ARCHITECT
PATRICK BOLGER
No. 3471
11-30-2010
Renewal Date
8-3-2010
Date
STATE OF CALIFORNIA

NOTES:

1. FOR ACCURATE RIGHT OF WAY DATA, CONTACT RIGHT OF WAY ENGINEERING AT THE DISTRICT OFFICE.
2. EXISTING CROSSOVER UNDER ALISAL ROAD TO REMAIN. WATER LINE CROSSOVER AND SPRINKLER CONTROL CROSSOVER TO BE REMOVED AND REPLACED.
3. EXISTING 2" SPRINKLER CONTROL CONDUIT AND 4" GSP WATER SUPPLY LINE ON BRIDGE TO BE CHECKED FOR CORROSION, DAMAGED COMPONENTS AND PROPER OPERATION PRIOR TO PERFORMING IRRIGATION SYSTEM REPLACEMENT WORK.

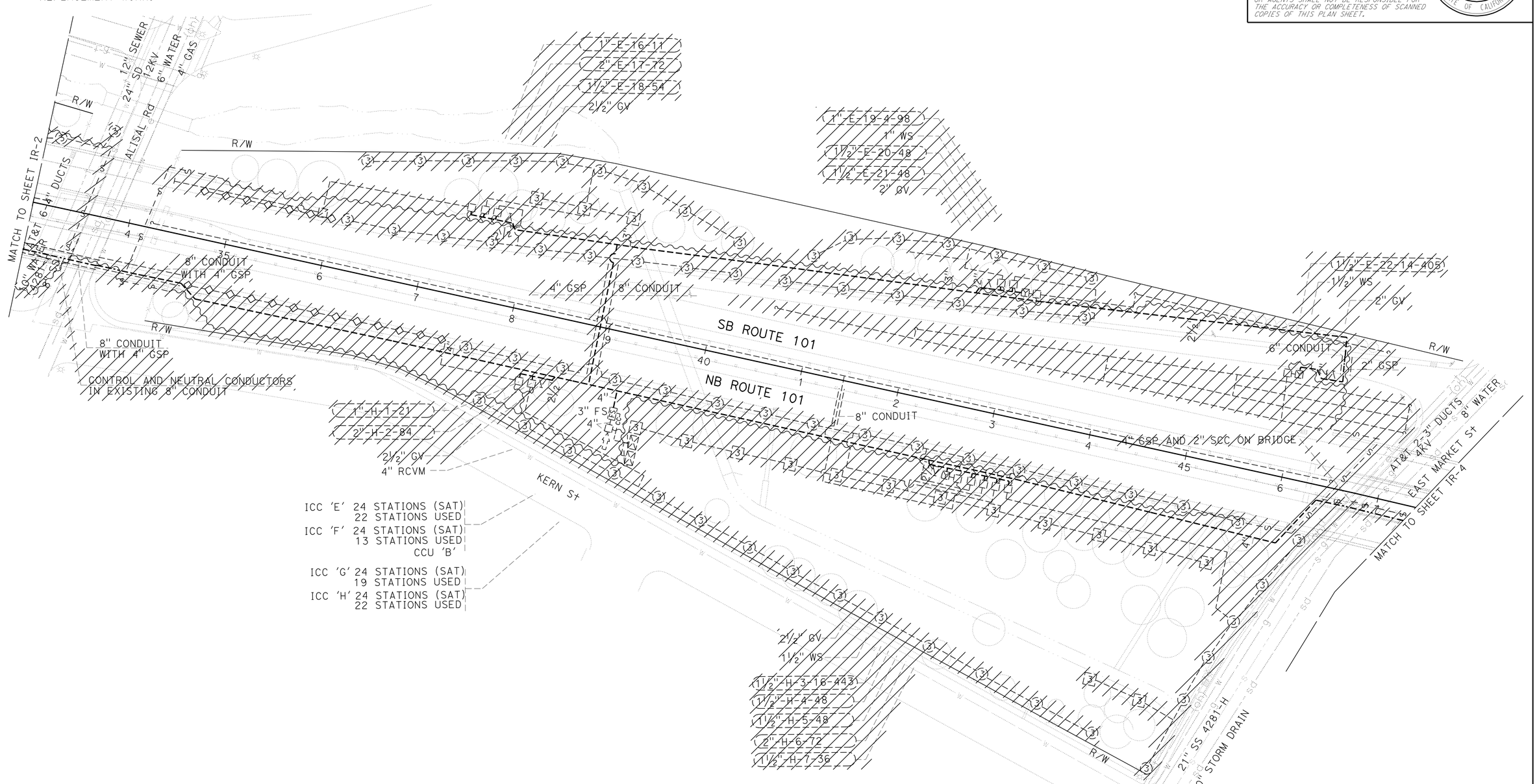

THIS PLAN ACCURATE FOR IRRIGATION REMOVAL WORK ONLY.

IRRIGATION REMOVAL PLAN

SCALE: 1" = 50'

IR-3

STATE OF CALIFORNIA - DEPARTMENT OF TRANSPORTATION
Caltrans® LANDSCAPE ARCHITECTURE

SENIOR LANDSCAPE ARCHITECT: DENNIS REEVES
CALCULATED-DESIGNED BY: PATRICK BOLGER
CHECKED BY: DAVID EMERSON
REVISED BY
DATE REVISED

LAST REVISION: DATE PLOTTED => 06-OCT-2010
08-03-10 TIME PLOTTED => 13:33

Dist	COUNTY	ROUTE	POST MILES TOTAL PROJECT	SHEET No.	TOTAL SHEETS
05	Mon	101	86.6/R87.7	11	43

LICENSED LANDSCAPE ARCHITECT

9-13-10
PLANS APPROVAL DATE

LICENSED LANDSCAPE ARCHITECT
Patrick Bolger
No. 2422
11-30-2010
Renewal Date
8-3-2010
Date
STATE OF CALIFORNIA

THE STATE OF CALIFORNIA OR ITS OFFICERS OR AGENTS SHALL NOT BE RESPONSIBLE FOR THE ACCURACY OR COMPLETENESS OF SCANNED COPIES OF THIS PLAN SHEET.

NOTE:

FOR ACCURATE RIGHT OF WAY DATA, CONTACT RIGHT OF WAY ENGINEERING AT THE DISTRICT OFFICE.

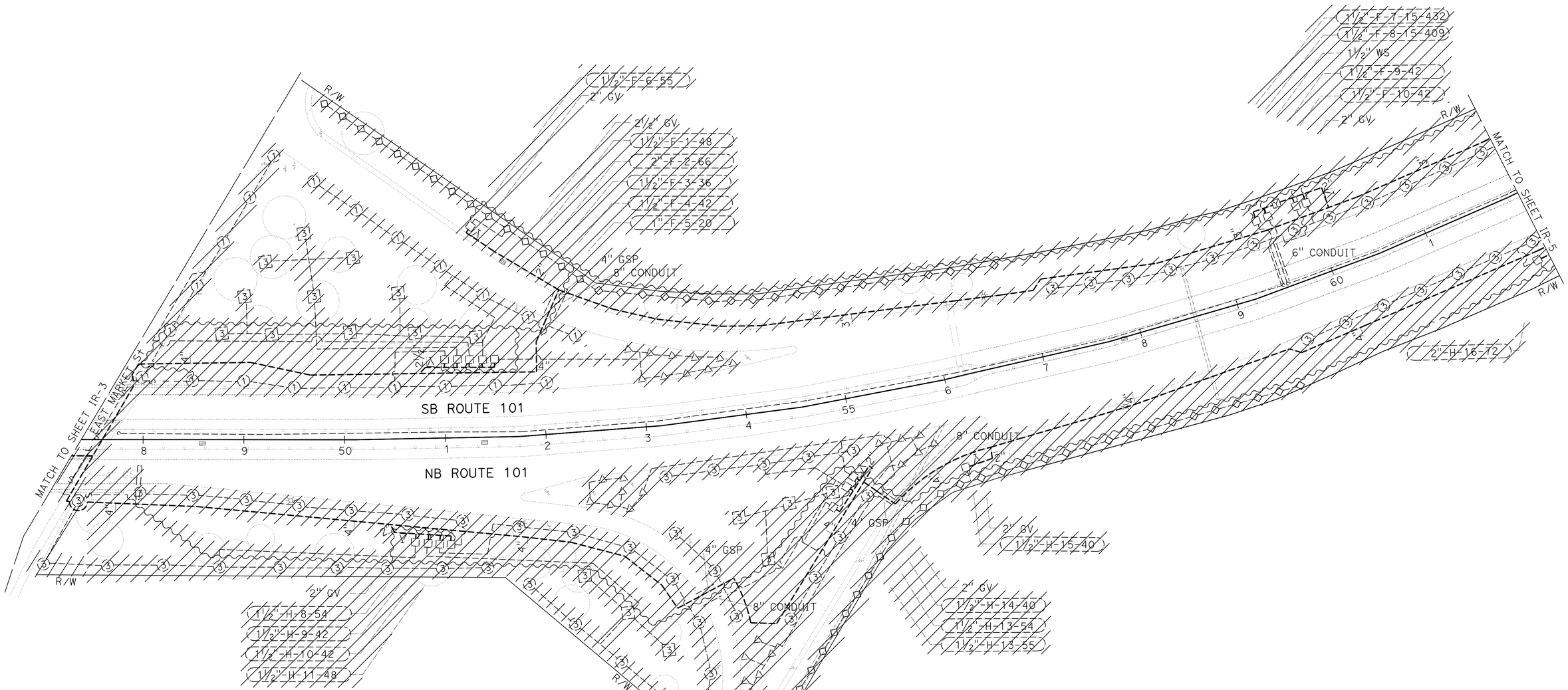

THIS PLAN ACCURATE FOR IRRIGATION REMOVAL WORK ONLY.

IRRIGATION REMOVAL PLAN

SCALE: 1" = 50'

IR-4

REVISED BY	DATE REVISED
PATRICK BOLGER	
DAVID EMERSON	

CALCULATED-DESIGNED BY	CHECKED BY

SENIOR LANDSCAPE ARCHITECT
DENNIS REEVES

STATE OF CALIFORNIA - DEPARTMENT OF TRANSPORTATION
Caltrans® LANDSCAPE ARCHITECTURE

LAST REVISION 08-03-10
DATE PLOTTED => 06-OCT-2010
TIME PLOTTED => 13:26

Dist	COUNTY	ROUTE	POST MILES TOTAL PROJECT	SHEET No.	TOTAL SHEETS
05	Mon	101	86.6/R87.7	12	43

LICENSED LANDSCAPE ARCHITECT

9-13-10
PLANS APPROVAL DATE

LICENSED LANDSCAPE ARCHITECT
Patrick Bolger
No. 2522
11-30-2010
Renewal Date
8-3-2010
Date
STATE OF CALIFORNIA

THE STATE OF CALIFORNIA OR ITS OFFICERS OR AGENTS SHALL NOT BE RESPONSIBLE FOR THE ACCURACY OR COMPLETENESS OF SCANNED COPIES OF THIS PLAN SHEET.

NOTE:

FOR ACCURATE RIGHT OF WAY DATA, CONTACT RIGHT OF WAY ENGINEERING AT THE DISTRICT OFFICE.

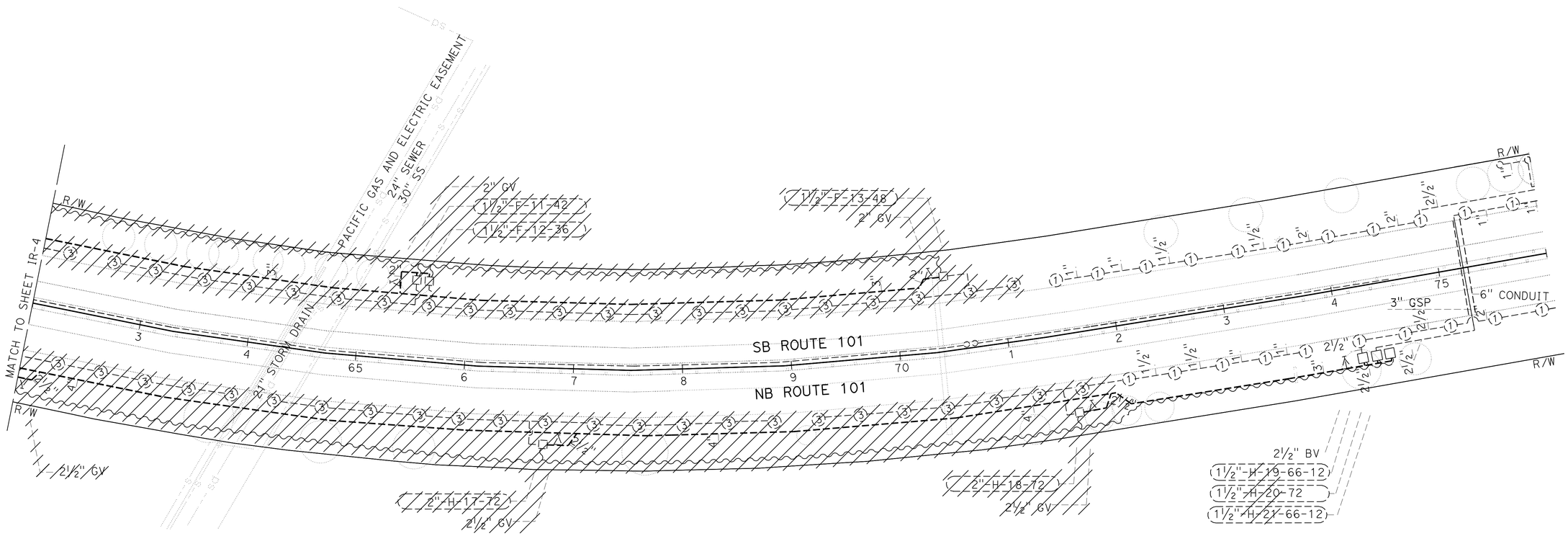

THIS PLAN ACCURATE FOR IRRIGATION REMOVAL WORK ONLY.

IRRIGATION REMOVAL PLAN

SCALE: 1" = 50'

IR-5

STATE OF CALIFORNIA - DEPARTMENT OF TRANSPORTATION
Caltrans® LANDSCAPE ARCHITECTURE

SENIOR LANDSCAPE ARCHITECT: DENNIS REEVES
CALCULATED-DESIGNED BY: PATRICK BOLGER
CHECKED BY: DAVID EMERSON
REVISED BY
DATE REVISED

LAST REVISION 08-03-10
DATE PLOTTED => 06-OCT-2010
TIME PLOTTED => 13:26

Dist	COUNTY	ROUTE	POST MILES TOTAL PROJECT	SHEET No.	TOTAL SHEETS
05	Mon	101	86.6/R87.7	13	43

LICENSED LANDSCAPE ARCHITECT

9-13-10
PLANS APPROVAL DATE

LICENSED LANDSCAPE ARCHITECT
Patrick Bolger
No. 2522
11-30-2010
Renewal Date
8-3-2010
Date
STATE OF CALIFORNIA

THE STATE OF CALIFORNIA OR ITS OFFICERS OR AGENTS SHALL NOT BE RESPONSIBLE FOR THE ACCURACY OR COMPLETENESS OF SCANNED COPIES OF THIS PLAN SHEET.

NOTE:

FOR ACCURATE RIGHT OF WAY DATA, CONTACT RIGHT OF WAY ENGINEERING AT THE DISTRICT OFFICE.

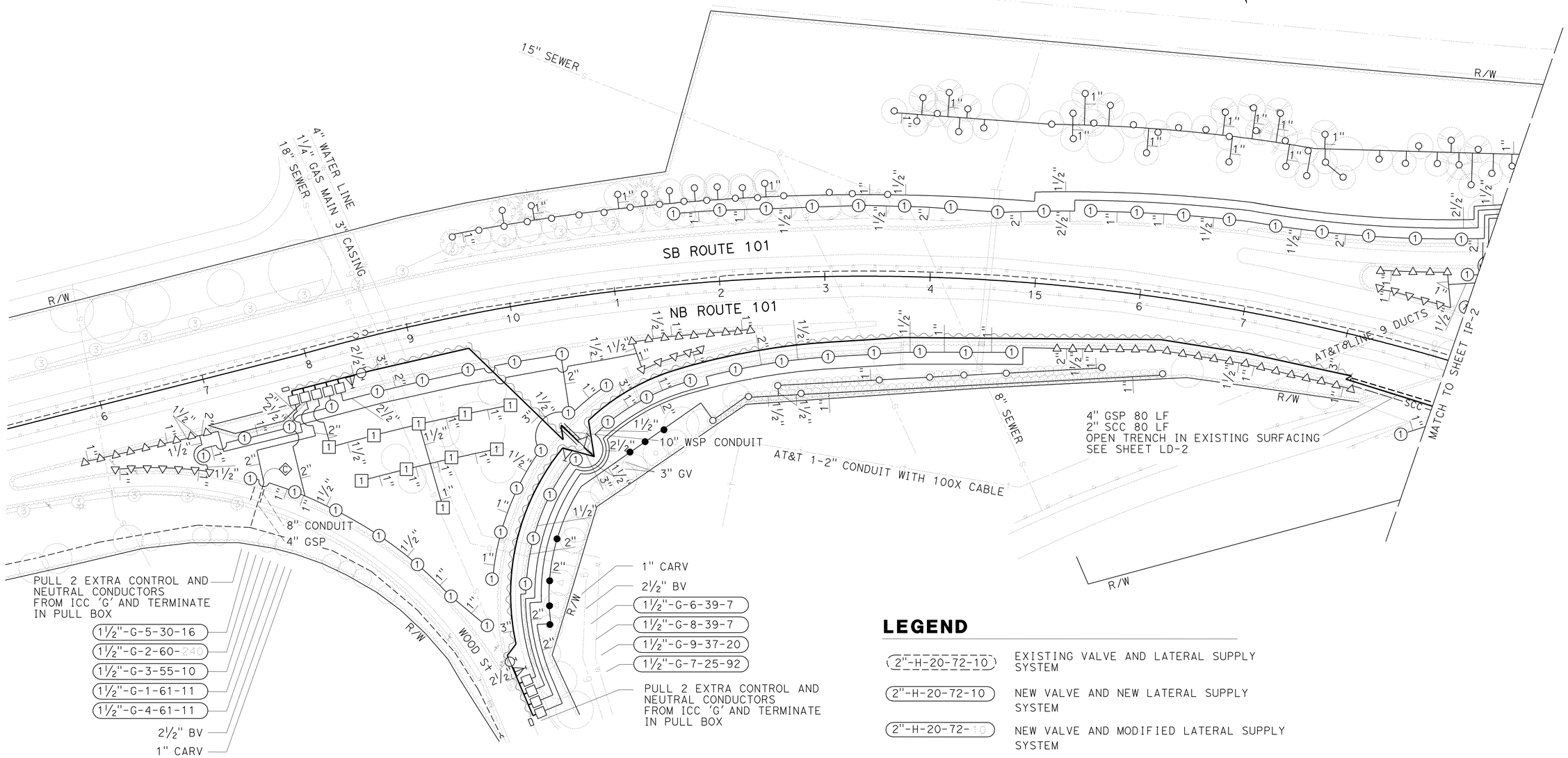

LEGEND

2"-H-20-72-10 (dashed)	EXISTING VALVE AND LATERAL SUPPLY SYSTEM
2"-H-20-72-10	NEW VALVE AND NEW LATERAL SUPPLY SYSTEM
2"-H-20-72-10	NEW VALVE AND MODIFIED LATERAL SUPPLY SYSTEM
	IRRIGATION FACILITY DESCRIPTION (DASHED LEADER LINE DENOTES EXISTING IRRIGATION FACILITY)
	PLASTIC PIPE (PR 315)(SUPPLY LINE)(MAIN)

THIS PLAN ACCURATE FOR IRRIGATION WORK ONLY.

IRRIGATION PLAN

SCALE: 1" = 50'

IP-1

STATE OF CALIFORNIA - DEPARTMENT OF TRANSPORTATION
Caltrans® LANDSCAPE ARCHITECTURE

SENIOR LANDSCAPE ARCHITECT: DENNIS REEVES

CALCULATED-DESIGNED BY: PATRICK BOLGER
CHECKED BY: DAVID EMERSON

REVISED BY
DATE REVISED

LAST REVISION 08-03-10 | DATE PLOTTED => 06-OCT-2010 | TIME PLOTTED => 13:26

Dist	COUNTY	ROUTE	POST MILES TOTAL PROJECT	SHEET No.	TOTAL SHEETS
05	Mon	101	86.6/R87.7	14	43

LICENSED LANDSCAPE ARCHITECT

9-13-10
PLANS APPROVAL DATE

THE STATE OF CALIFORNIA OR ITS OFFICERS OR AGENTS SHALL NOT BE RESPONSIBLE FOR THE ACCURACY OR COMPLETENESS OF SCANNED COPIES OF THIS PLAN SHEET.

LICENSED LANDSCAPE ARCHITECT
PATRICK K. BOLGER
No. 3471
11-30-2010
Renewal Date
8-3-2010
Date
STATE OF CALIFORNIA

NOTE:

FOR ACCURATE RIGHT OF WAY DATA, CONTACT RIGHT OF WAY ENGINEERING AT THE DISTRICT OFFICE.

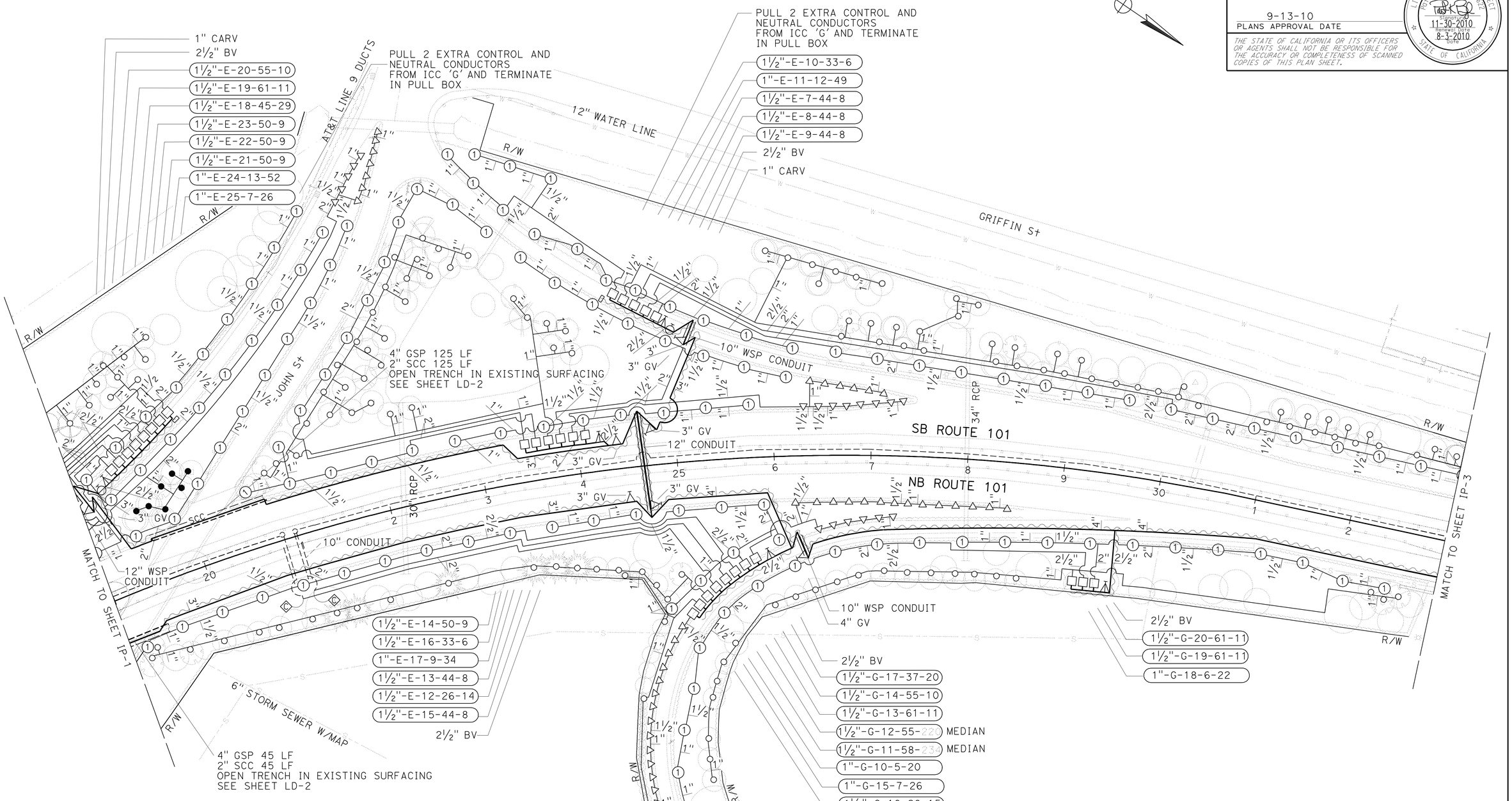

THIS PLAN ACCURATE FOR IRRIGATION WORK ONLY.

IRRIGATION PLAN

SCALE: 1" = 50'

IP-2

REVISED BY	DATE REVISED
PATRICK BOLGER	DAVID EMERSON

CALCULATED- DESIGNED BY	CHECKED BY
SENIOR LANDSCAPE ARCHITECT	DENNIS REEVES

STATE OF CALIFORNIA - DEPARTMENT OF TRANSPORTATION
Caltrans® LANDSCAPE ARCHITECTURE

LAST REVISION 08-03-10 | DATE PLOTTED => 06-OCT-2010 | TIME PLOTTED => 13:26

Dist	COUNTY	ROUTE	POST MILES TOTAL PROJECT	SHEET No.	TOTAL SHEETS
05	Mon	101	86.6/R87.7	15	43

LICENSED LANDSCAPE ARCHITECT

9-13-10
PLANS APPROVAL DATE

LICENSED LANDSCAPE ARCHITECT
Patrick Bolger
No. 2502
11-30-2010
Renewal Date
8-3-2010
Date
STATE OF CALIFORNIA

THE STATE OF CALIFORNIA OR ITS OFFICERS OR AGENTS SHALL NOT BE RESPONSIBLE FOR THE ACCURACY OR COMPLETENESS OF SCANNED COPIES OF THIS PLAN SHEET.

NOTE:

FOR ACCURATE RIGHT OF WAY DATA, CONTACT RIGHT OF WAY ENGINEERING AT THE DISTRICT OFFICE.

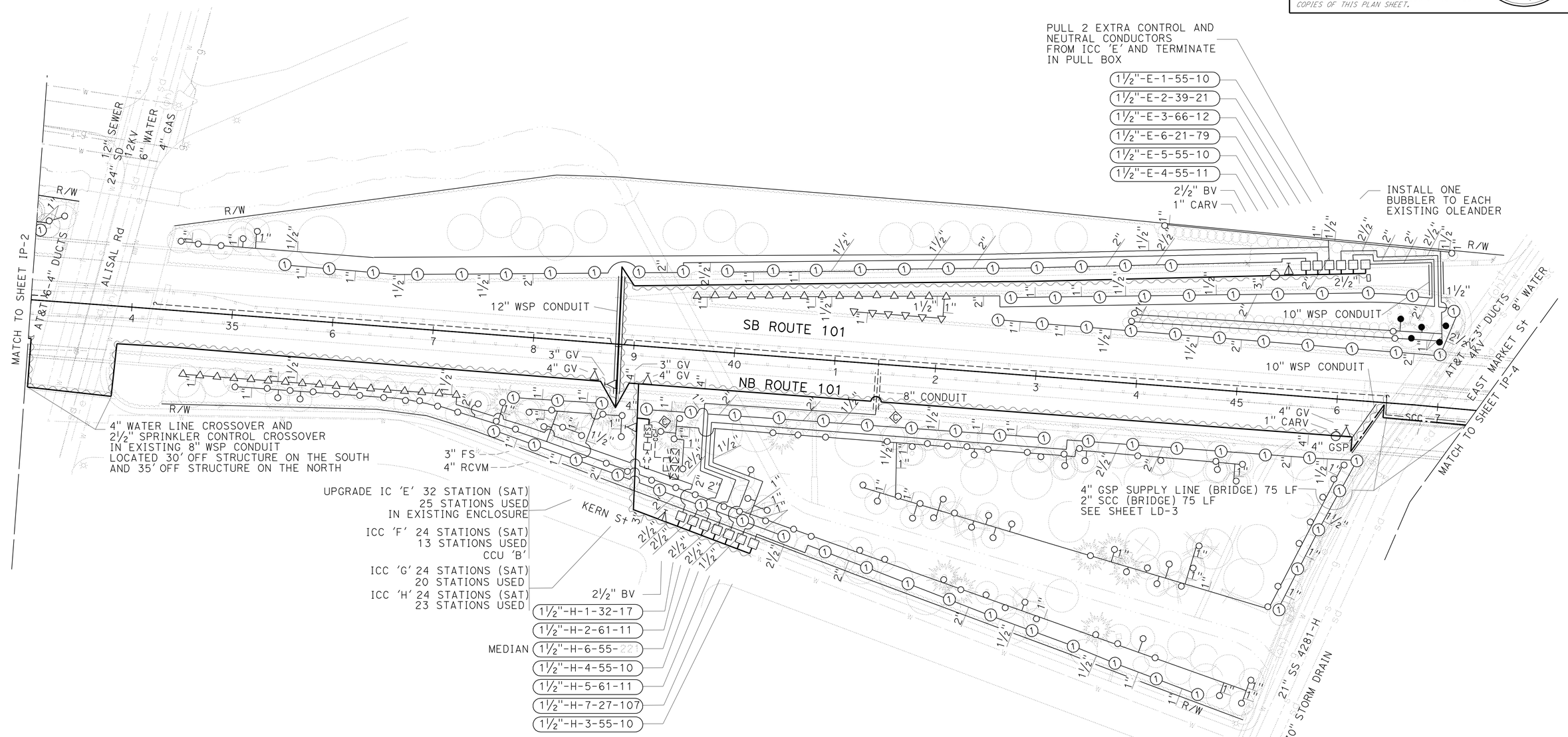

THIS PLAN ACCURATE FOR IRRIGATION WORK ONLY.

IRRIGATION PLAN

SCALE: 1" = 50'

IP-3

STATE OF CALIFORNIA - DEPARTMENT OF TRANSPORTATION
Caltrans LANDSCAPE ARCHITECTURE

SENIOR LANDSCAPE ARCHITECT: DENNIS REEVES
CALCULATED-DESIGNED BY: PATRICK BOLGER
CHECKED BY: DAVID EMERSON
REVISED BY
DATE REVISED

LAST REVISION 08-03-10 | DATE PLOTTED => 06-OCT-2010 | TIME PLOTTED => 13:33

Dist	COUNTY	ROUTE	POST MILES TOTAL PROJECT	SHEET No.	TOTAL SHEETS
05	Mon	101	86.6/R87.7	16	43

LICENSED LANDSCAPE ARCHITECT

9-13-10
PLANS APPROVAL DATE

LICENSED LANDSCAPE ARCHITECT
Patrick Bolger
No. 2522
11-30-2010
Expiration Date
8-3-2010
Date
STATE OF CALIFORNIA

THE STATE OF CALIFORNIA OR ITS OFFICERS OR AGENTS SHALL NOT BE RESPONSIBLE FOR THE ACCURACY OR COMPLETENESS OF SCANNED COPIES OF THIS PLAN SHEET.

NOTE:

FOR ACCURATE RIGHT OF WAY DATA, CONTACT RIGHT OF WAY ENGINEERING AT THE DISTRICT OFFICE.

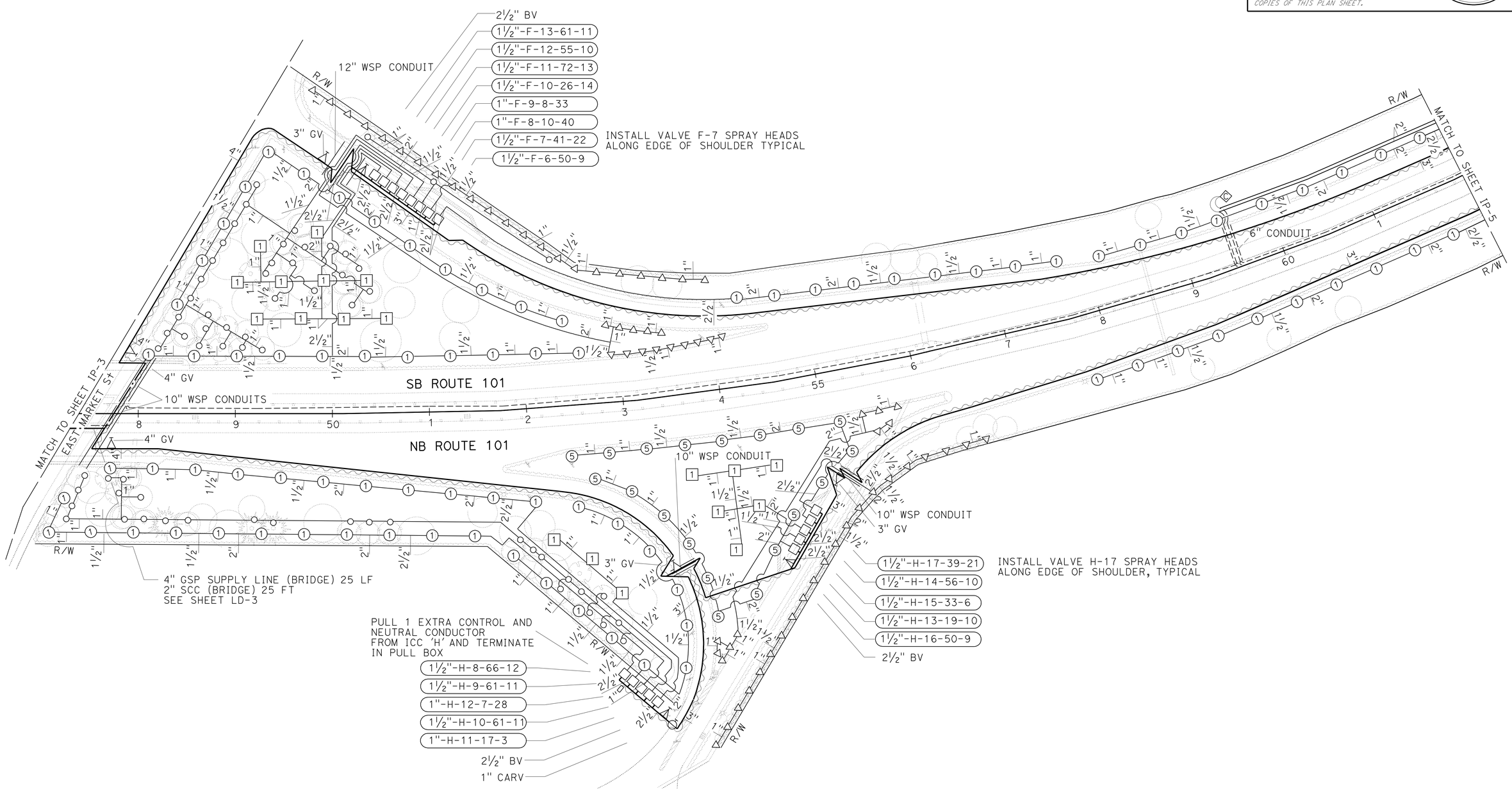

THIS PLAN ACCURATE FOR IRRIGATION WORK ONLY.

IRRIGATION PLAN

SCALE: 1" = 50'

IP-4

STATE OF CALIFORNIA - DEPARTMENT OF TRANSPORTATION
Caltrans® LANDSCAPE ARCHITECTURE

SENIOR LANDSCAPE ARCHITECT: DENNIS REEVES
CALCULATED-DESIGNED BY: PATRICK BOLGER
CHECKED BY: DAVID EMERSON
REVISED BY
DATE REVISED

LAST REVISION: 08-03-10
DATE PLOTTED => 06-OCT-2010
TIME PLOTTED => 13:30

Dist	COUNTY	ROUTE	POST MILES TOTAL PROJECT	SHEET No.	TOTAL SHEETS
05	Mon	101	86.6/R87.7	17	43

LICENSED LANDSCAPE ARCHITECT

9-13-10
PLANS APPROVAL DATE

LICENSED LANDSCAPE ARCHITECT
Patrick Bolger-Jones
No. 2504
11-30-2010
Expiration Date
8-3-2010
Date
STATE OF CALIFORNIA

THE STATE OF CALIFORNIA OR ITS OFFICERS OR AGENTS SHALL NOT BE RESPONSIBLE FOR THE ACCURACY OR COMPLETENESS OF SCANNED COPIES OF THIS PLAN SHEET.

NOTE:

FOR ACCURATE RIGHT OF WAY DATA, CONTACT RIGHT OF WAY ENGINEERING AT THE DISTRICT OFFICE.

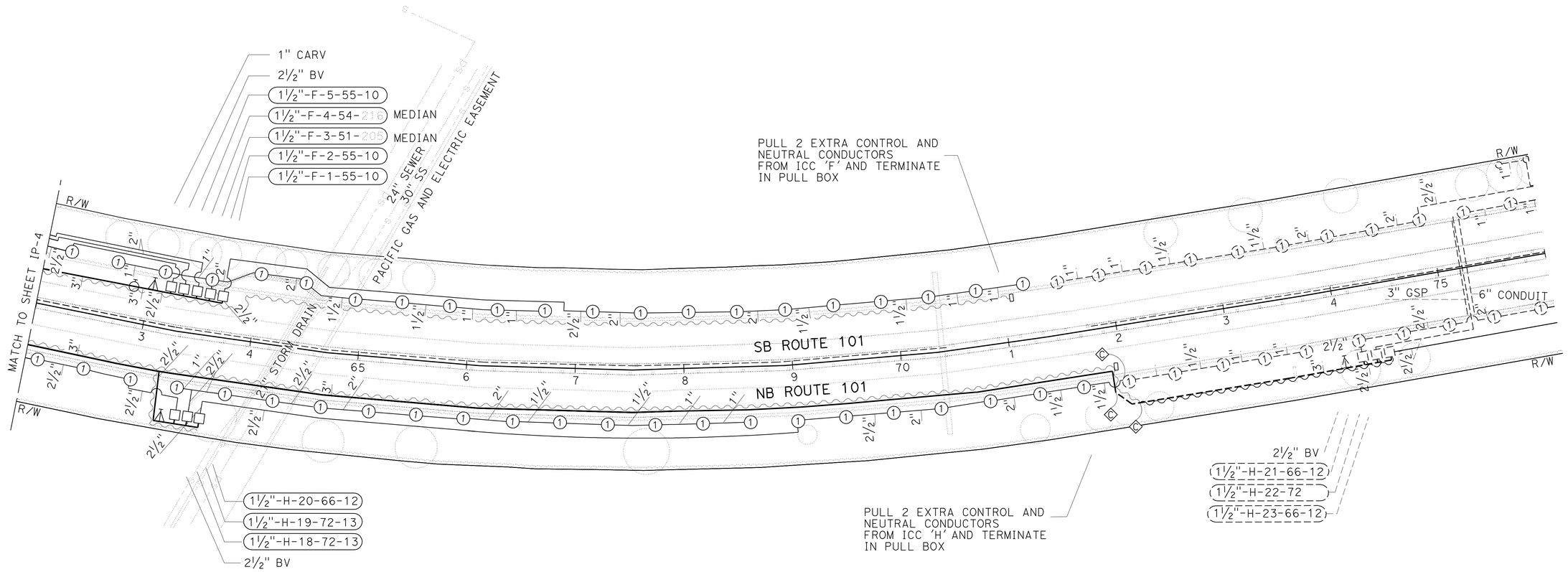

THIS PLAN ACCURATE FOR IRRIGATION WORK ONLY.

IRRIGATION PLAN

SCALE: 1" = 50'

IP-5

STATE OF CALIFORNIA - DEPARTMENT OF TRANSPORTATION
Caltrans® LANDSCAPE ARCHITECTURE

SENIOR LANDSCAPE ARCHITECT: DENNIS REEVES

CALCULATED-DESIGNED BY: PATRICK BOLGER
CHECKED BY: DAVID EMERSON

REVISED BY
DATE REVISED

LAST REVISION 08-03-10
DATE PLOTTED => 06-OCT-2010
TIME PLOTTED => 13:30

Dist	COUNTY	ROUTE	POST MILES TOTAL PROJECT	SHEET No.	TOTAL SHEETS
05	Mon	101	86.6/R87.7	18	43

LICENSED LANDSCAPE ARCHITECT

9-13-10
PLANS APPROVAL DATE

LICENSED LANDSCAPE ARCHITECT PATRICK K. BOLGER No. 3472 STATE OF CALIFORNIA
Signature 11-30-2010 Date
Signature 8-3-2010 Date

THE STATE OF CALIFORNIA OR ITS OFFICERS OR AGENTS SHALL NOT BE RESPONSIBLE FOR THE ACCURACY OR COMPLETENESS OF SCANNED COPIES OF THIS PLAN SHEET.

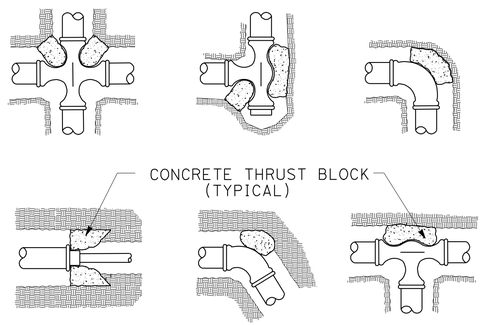

THRUST BLOCKS

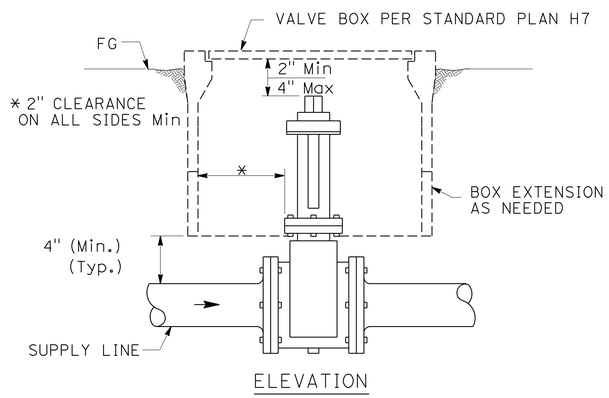

ELEVATION

GATE VALVE

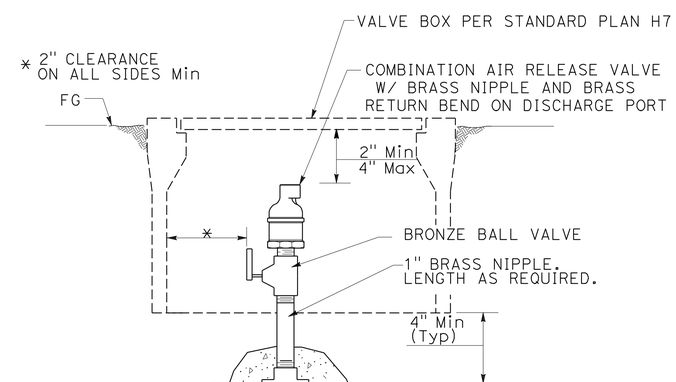

ELEVATION

COMBINATION AIR RELEASE VALVE

SPRINKLER SCHEDULE

SYMBOL	TYPE	DESCRIPTION	SPRAY PATTERN	OPERATING PRESSURE (PSI)	PRESSURE COMPENSATING	PLUS/MINUS 5% ② DISCHARGE: GALLONS PER MINUTE (GPM)	GALLONS PER HOUR (GPH)	RADIUS (F+)	WIDTH x LENGTH (F+)	MATERIAL	INLET CONNECTION (NPT INCH)	POSITIVE-LOCKING ADJ ARC STOP	BACKSPLASH PREVENTER	DIFFUSER PIN	DISTANCE CONTROL FLAP	ADJ DISCHARGE	RISER: TYPE	MATERIAL: PLASTIC	GALVANIZED	SIZE (IPS INCH)	HEIGHT (INCH)	FLOW SHUTOFF DEVICE	SWING JOINT (TYPE)	RISER SUPPORT	SPRINKLER PROTECTOR (TYPE)	REMARKS
○	A-1	IMPACT SPRAY	P	30	-	5.5	-	44	-	B/B	¾	X	X	X	X	-	IV	-	X	¾	12	-	III	-	-	⑨
□	A-1	IMPACT SPRAY	F	30	-	5.5	-	44	-	B/B	¾	-	-	X	X	-	IV	-	X	¾	12	-	III	-	-	⑨
○	A-5	GEAR DRIVEN	H	35	X	5.23	-	43	-	PL	¾	-	-	X	-	-	VI	-	-	½	-	-	II	-	I	③ ⑥
△	B-1	SHRUB SPRAY	H	30	X	1.85	-	15	-	PL	½	-	-	X	-	-	VI	-	-	½	-	-	-	-	⑦	③ ⑥
○	C-1	BUBBLER	-	30	X	0.25	-	-	-	PL	½	-	-	-	-	-	V	-	-	½	-	-	-	-	-	④ ⑤
●	C-2	BUBBLER	-	30	X	0.50	-	-	-	PL	½	-	-	-	-	X	V	-	-	½	-	-	-	-	-	④ ⑤ ⑧

X IN BOX DENOTES REQUIREMENT

APPLICABLE WHEN CIRCLED BELOW:

1 - See Special Provisions.
② - If a pressure compensating device is specified, the discharge and radii shown reflect its use.
③ - Internal check valve required.
④ - One flood bubbler required per plant.
⑤ - Bubbler to be installed on the uphill side of plant.
⑥ - 12" pop-up required.
⑦ - Sprinkler protectors type I shall be installed on all sprinklers operated by Valves E-13, H-13, H-14, H-16, and H-17.
⑧ - Adjustable flow required.
⑨ - External check valve required.

ABBREVIATIONS

F	full circle	Ft	feet/foot
P	part circle	GPM	gallons per minute
F/P	full/part circle	GPH	gallons per hour
Q	quarter circle	Adj	adjustable
T	third circle	PL	plastic
H	half circle	B/B	brass/bronze
TT	two third circle	B/PL	brass/plastic
TQ	three quarter circle	B/B/PL	brass/bronze/plastic
CST	center strip	NPT	national pipe thread
SST	side strip	IPS	iron pipe size
		PSI	pounds per square inch

SPRINKLER SCHEDULE AND LANDSCAPE DETAILS

NO SCALE

LD-1

STATE OF CALIFORNIA - DEPARTMENT OF TRANSPORTATION
Caltrans LANDSCAPE ARCHITECTURE
SENIOR LANDSCAPE ARCHITECT: DENNIS REEVES
CALCULATED-DESIGNED BY: PATRICK BOLGER
CHECKED BY: DAVID EMERSON
REVISED BY
DATE REVISED

LAST REVISION 08-03-10 | DATE PLOTTED => 06-OCT-2010 | TIME PLOTTED => 13:30

Dist	COUNTY	ROUTE	POST MILES TOTAL PROJECT	SHEET No.	TOTAL SHEETS
05	Mon	101	86.6/R87.7	19	43

LICENSED LANDSCAPE ARCHITECT

9-13-10
PLANS APPROVAL DATE

LICENSED LANDSCAPE ARCHITECT — Patrick K. Bolger — No. 2522 — Exp. 11-30-2010 — Registered Professional Engineer — 8-3-2010 — Date — STATE OF CALIFORNIA

THE STATE OF CALIFORNIA OR ITS OFFICERS OR AGENTS SHALL NOT BE RESPONSIBLE FOR THE ACCURACY OR COMPLETENESS OF SCANNED COPIES OF THIS PLAN SHEET.

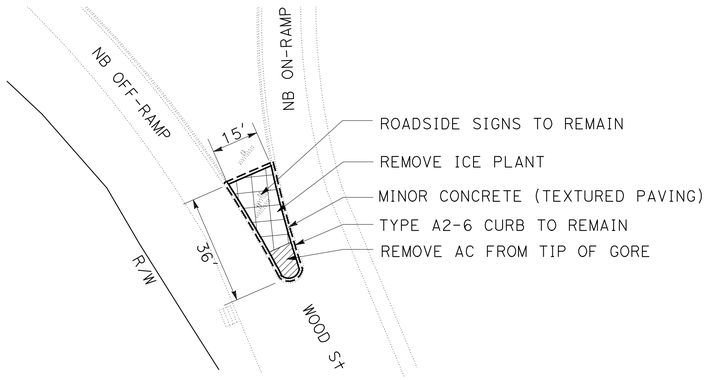

MINOR CONCRETE (TEXTURED PAVING)

Sta 9+10 Rt

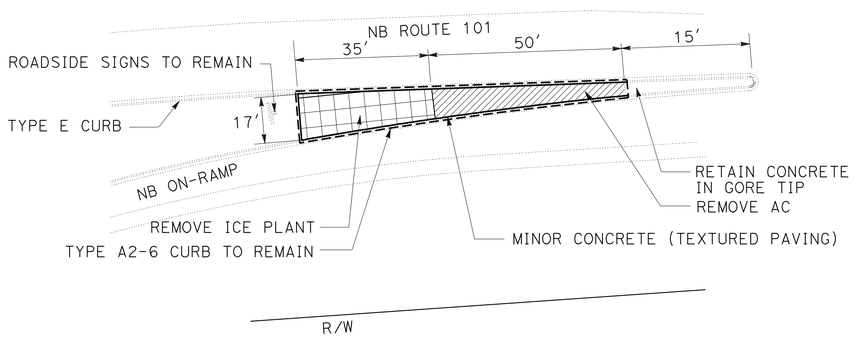

MINOR CONCRETE (TEXTURED PAVING)

Sta 12+35 Rt

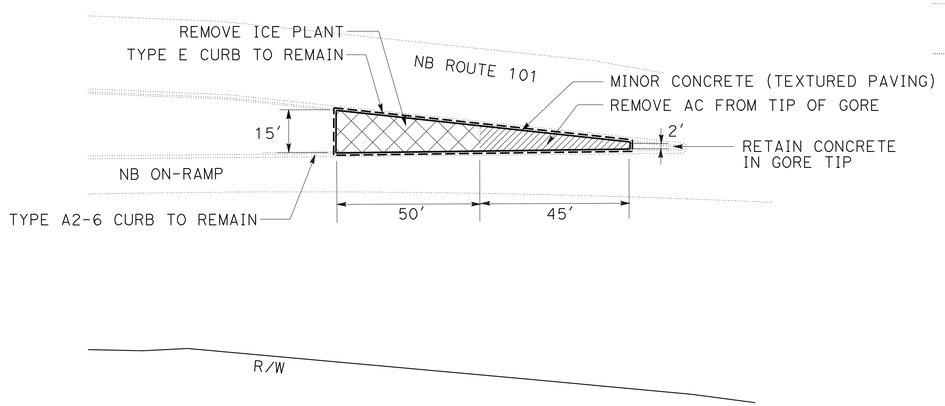

MINOR CONCRETE (TEXTURED PAVING)

Sta 28+00 Rt

NOTE: ALL MINOR CONCRETE (TEXTURED PAVING) SHALL RECEIVE COLORED HARDENERS TAN, (FEDERAL STANDARD COLOR 33448) AND BRICK RED, (FEDERAL STANDARD COLOR 30109).

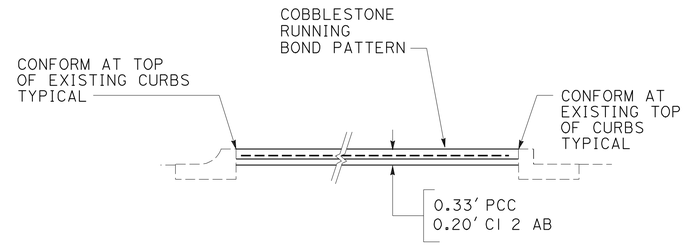

SECTION A-A

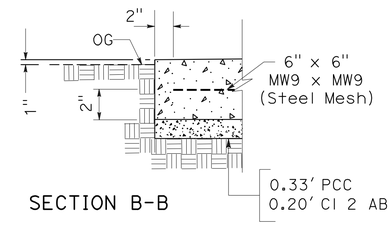

SECTION B-B

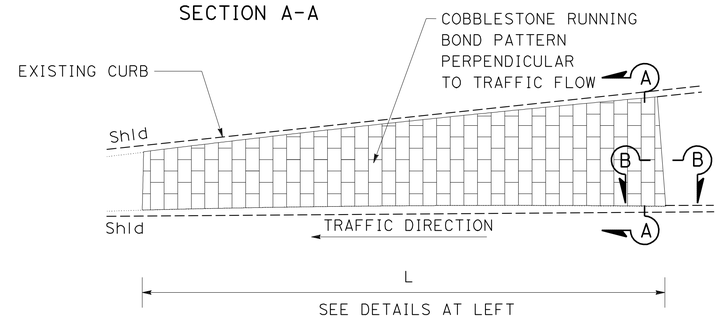

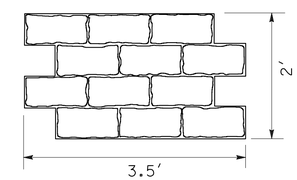

PLAN

COBBLESTONE RUNNING BOND PATTERN

MINOR CONCRETE (TEXTURED PAVING)

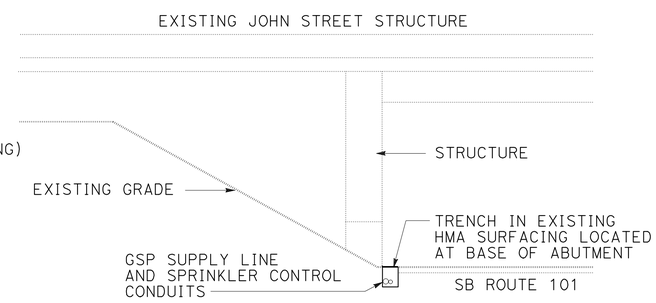

JOHN STREET/SB ROUTE 101

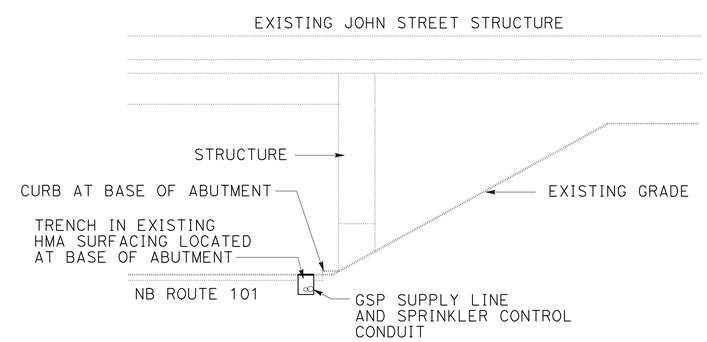

JOHN STREET/NB ROUTE 101

OPEN TRENCH IN EXISTING SURFACING

LANDSCAPE DETAILS

NO SCALE

LD-2

STATE OF CALIFORNIA - DEPARTMENT OF TRANSPORTATION
Caltrans® LANDSCAPE ARCHITECTURE

SENIOR LANDSCAPE ARCHITECT: DENNIS REEVES
CALCULATED-DESIGNED BY: PATRICK BOLGER
CHECKED BY: DAVID EMERSON
REVISED BY / DATE REVISED

LAST REVISION 08-03-10 | DATE PLOTTED => 06-OCT-2010 | TIME PLOTTED => 13:30

Dist	COUNTY	ROUTE	POST MILES TOTAL PROJECT	SHEET No.	TOTAL SHEETS
05	Mon	101	86.6/R87.7	20	43

LICENSED LANDSCAPE ARCHITECT

9-13-10
PLANS APPROVAL DATE

LICENSED LANDSCAPE ARCHITECT
Patrick Bolger
Expiration Date
11-30-2010
Registration Number
8-3-2010
Date
STATE OF CALIFORNIA

THE STATE OF CALIFORNIA OR ITS OFFICERS OR AGENTS SHALL NOT BE RESPONSIBLE FOR THE ACCURACY OR COMPLETENESS OF SCANNED COPIES OF THIS PLAN SHEET.

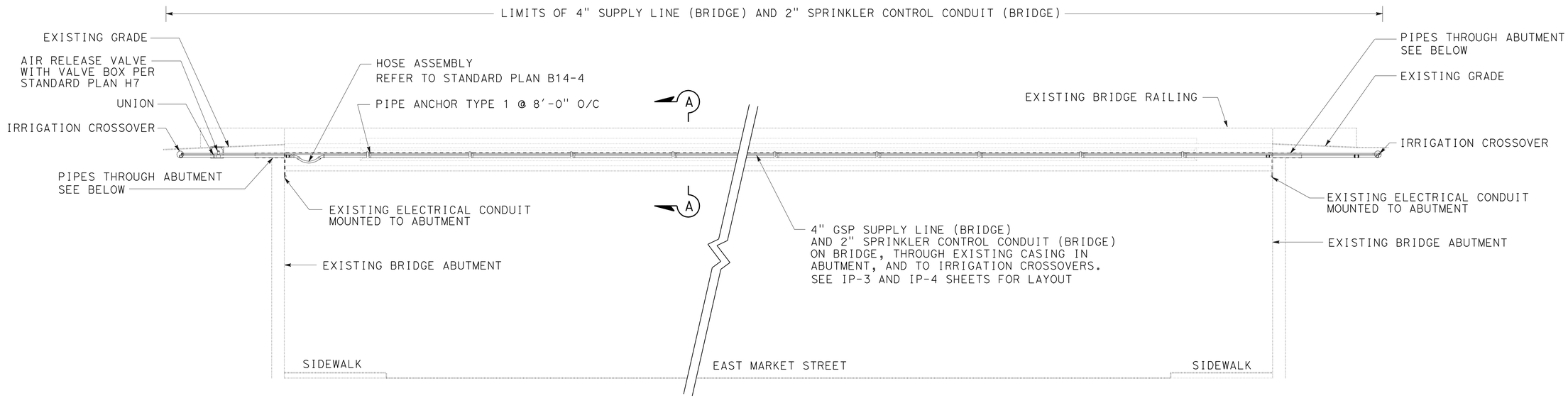

4" SUPPLY LINE (BRIDGE) AND SPRINKLER CONTROL CONDUIT (BRIDGE)

ELEVATION NORTHBOUND ROUTE 101/MARKET STREET UC VIEWING EAST

NOTES:

1. ALL DIMENSIONS ARE NOMINAL.
2. CONTRACTOR WILL BE REQUIRED TO LOOSEN AND/OR REMOVE ELECTRICAL CONDUIT HANGERS, (TOTAL 9) TO ACCESS THE IRRIGATION HANGERS, (TOTAL 9).
3. EXISTING 2" SPRINKLER CONTROL CONDUIT AND 4" GSP SUPPLY LINE ON BRIDGE TO BE CHECKED FOR CORROSION, DAMAGED COMPONENTS AND PROPER OPERATION PRIOR TO PERFORMING IRRIGATION SYSTEM REPLACEMENT WORK.
4. INSTALL AIR RELEASE VALVE USING THREADED TEE AND UNION.

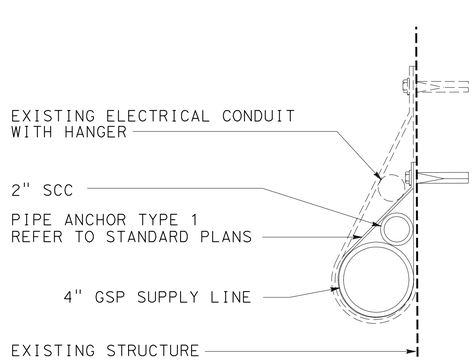

PIPE ANCHOR TYPE 1

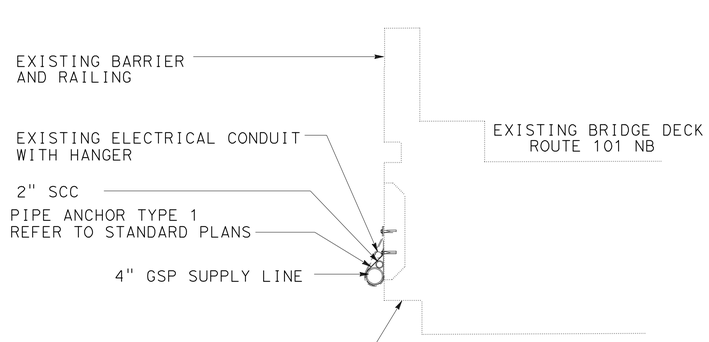

SECTION A-A

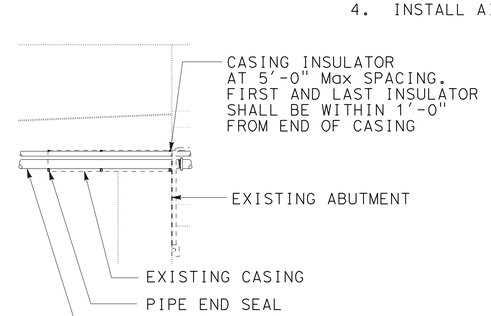

PIPES THROUGH ABUTMENT

LANDSCAPE DETAILS
NO SCALE

LD-3

STATE OF CALIFORNIA - DEPARTMENT OF TRANSPORTATION
Caltrans® LANDSCAPE ARCHITECTURE

SENIOR LANDSCAPE ARCHITECT: DENNIS REEVES
CALCULATED-DESIGNED BY: PATRICK BOLGER
CHECKED BY: DAVID EMERSON
REVISED BY
DATE REVISED

LAST REVISION 08-03-10 | DATE PLOTTED => 06-OCT-2010 | TIME PLOTTED => 13:29

Dist	COUNTY	ROUTE	POST MILES TOTAL PROJECT	SHEET No.	TOTAL SHEETS
05	Mon	101	86.6/R87.7	21	43

LICENSED LANDSCAPE ARCHITECT

9-13-10
PLANS APPROVAL DATE

LICENSED LANDSCAPE ARCHITECT
Patrick Bolger
Exp. Date 11-30-2010
Registration Date 8-3-2010
Date
STATE OF CALIFORNIA

THE STATE OF CALIFORNIA OR ITS OFFICERS OR AGENTS SHALL NOT BE RESPONSIBLE FOR THE ACCURACY OR COMPLETENESS OF SCANNED COPIES OF THIS PLAN SHEET.

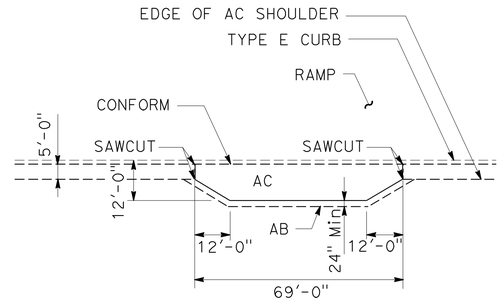

SEE STANDARD PLANS
FOR STRUCTURAL SECTION

PLAN

MAINTENANCE VEHICLE PULLOUT (TYPE 2)

IRRIGATION CROSSOVERS

LOCATION		SIDE		WELDED STEEL PIPE CONDUIT		(N) WATER LINE CROSSOVER	(N) SPRINKLER CONTROL CROSSOVER
				SIZE (INCH)			
SHEET	STATION	L†	R†	10"	12"	SIZE (INCH)	SIZE (INCH)
				LENGTH (LF)			
IP-1	10+30		X	26	-	3	3
IP-2	19+10	X		-	26	(1) 3" (1) 2½" (1) 2"	3
IP-2	24+70	X	X	-	100	3	3
IP-2	25+15	X		26	-	3	3
IP-2	26+30		X	26	-	4	3
IP-3	38+90	X	X	-	130	3	3
IP-3	46+40		X	60		3	3
IP-3	46+90	X		36	-	(1) 2½" (1) 2" (1) 1½"	3
IP-4	47+80	X		68	-	4" GALVANIZED STEEL PIPE	3
IP-4	47+80		X	67	-	4" GALVANIZED STEEL PIPE	3
IP-4	50+05	X		-	54	(1) 3" (3) 2½" (1) 2" (2) 1½"	3
IP-4	53+40		X	35	-	3	3
IP-4	55+20		X	26	-	3	3
TOTAL				370	310		

(N) - NOT A SEPARATE PAY ITEM,
FOR INFORMATION ONLY.

MULCH

SHEET	AREA MULCH (CY)
PL-1	79
PP-1	100
PP-2	24
PP-3	190
PP-4	107
TOTAL	500

FENCES & GATES

LOCATION		SIDE		4 F† CHAIN LINK GATE (TYPE CL-6)	12 F† CHAIN LINK GATE (2) 6' GATE PANELS (TYPE CL-6)	RECONSTRUCT CHAIN LINK FENCE (TYPE CL-6)
SHEET	STATION	L†	R†	(EA)	(EA)	(F†)
PP-2	29+35		X	1	-	-
PP-3	45+50 TO 46+40		X	-	-	300
PP-3	45+85		X	-	1	-
PP-3	46+25		X	1	-	-
PP-4	47+00		X	1	-	-
TOTAL				3	1	300

MINOR CONCRETE (TEXTURED PAVING)

LOCATION		SIDE		MINOR CONCRETE (TEXTURED PAVING)	CLASS 2 AGGREGATE BASE (N)	ROADWAY EXCAVATION (N)
SHEET	STATION	L†	R†	(SQFT)	(CY)	(CY)
PP-1	9+10		X	731	5.4	28.5
PP-1	12+35		X	1917	14.2	37.6
PP-2	28+00		X	1602	11.9	31.4
TOTAL				4250	31.5	97.5

(N) - NOT A SEPARATE PAY ITEM,
FOR INFORMATION ONLY.

ROADSIDE PAVING (MISCELLANEOUS AREAS)

LOCATION		SIDE		MVP	MVP (TYPE 2)	ROADSIDE PAVING (MISCELLANEOUS AREAS)	MINOR HOT MIXED ASPHALT (TYPE A) (N)	CLASS 2 AGGREGATE BASE (N)	ROADWAY EXCAVATION (N)	SAWCUT (N)
SHEET	STATION	L†	R†			(SQYD)	(TON)	(CY)	(CY)	(F†)
PP-1	7+25		X	X		108	18.2	18.0	27.0	-
PP-2	24+25	X			X	106	17.9	17.7	26.5	10
PP-2	25+00		X		X	106	17.9	17.7	26.5	10
PP-3	45+30	X			X	106	17.9	17.7	26.5	10
PP-4	51+25	X			X	106	17.9	17.7	26.5	10
PP-4	54+50		X	X		108	18.2	18.0	27.0	-
PP-5	64+10	X		X		108	18.2	18.0	27.0	-
TOTAL						748	126.2	124.8	187.0	40

(N) - NOT A SEPARATE PAY ITEM,
FOR INFORMATION ONLY.

LANDSCAPE DETAILS AND SUMMARY OF QUANTITIES

NO SCALE

LD-4

STATE OF CALIFORNIA - DEPARTMENT OF TRANSPORTATION
Caltrans® LANDSCAPE ARCHITECTURE

SENIOR LANDSCAPE ARCHITECT: DENNIS REEVES
CALCULATED-DESIGNED BY: PATRICK BOLGER
CHECKED BY: DAVID EMERSON
REVISED BY
DATE REVISED

LAST REVISION 08-03-10
DATE PLOTTED => 06-OCT-2010
TIME PLOTTED => 13:29

Dist	COUNTY	ROUTE	POST MILES TOTAL PROJECT	SHEET No.	TOTAL SHEETS
05	Mon	101	86.6/R87.7	22	43

LICENSED LANDSCAPE ARCHITECT

9-13-10
PLANS APPROVAL DATE

LICENSED LANDSCAPE ARCHITECT — Patrick Bolger — STATE OF CALIFORNIA — Expiration Date 11-30-2010 — Registered Professional Engineer 8-3-2010 Date

THE STATE OF CALIFORNIA OR ITS OFFICERS OR AGENTS SHALL NOT BE RESPONSIBLE FOR THE ACCURACY OR COMPLETENESS OF SCANNED COPIES OF THIS PLAN SHEET.

ABBREVIATIONS:

ARV — air relief valve
BPA — backflow preventer assembly
CEC — controller enclosure cabinet
EA — each
WS — wye strainer
FS — flow sensor
GV — gate valve
BV — ball valve
LF — linear feet
PR — pressure rated
RCV — remote control valve
PRV — pressure reducing valve
SCC — sprinkler control conduit

SUBTOTALS PER VALVE ON LATERAL SUPPLY SIDE OF CONTROL VALVE

DESCRIPTION		UNIT	VALVE OR ASSEMBLY NUMBER																									SUBTOTALS	UNIT	DESCRIPTION	
			E-1	E-2	E-3	E-4	E-5	E-6	E-7	E-8	E-9	E-10	E-11	E-12	E-13	E-14	E-15	E-16	E-17	E-18	E-19	E-20	E-21	E-22	E-23	E-24	E-25				
PLASTIC PIPE SUPPLY LINE PR 200	1 INCH	LF	90	210	90	90	90	900	90	90	195	175	1505	195	180	90	180	90	1200	125	120	90	190	90	90	1400	500	8065	LF	1 INCH	PLASTIC PIPE SUPPLY LINE PR 200
	1½ INCH	LF	135	125	135	135	135	1265	135	135	110	80	-	290	130	130	130	135	35	50	135	135	135	135	135	-	750	4715	LF	1½ INCH	
	2 INCH	LF	295	635	220	185	180	20	90	315	10	135	-	-	190	440	10	165	-	575	195	235	45	135	285	-	-	4360	LF	2 INCH	
	2½ INCH	LF	-	-	230	190	650	-	600	-	-	-	-	-	-	-	-	-	-	-	155	-	10	565	-	-	-	2400	LF	2½ INCH	
SPRINKLER TYPE	A-1	EA	10	-	12	11	10	-	8	8	8	6	-	-	8	9	8	6	-	-	11	10	9	9	9	-	-	152	EA	A-1	SPRINKLER TYPE
	A-5	EA	-	-	-	-	-	-	-	-	-	-	-	-	-	-	-	-	-	-	-	-	-	-	-	-	-	-	EA	A-5	
	B-1	EA	-	21	-	-	-	-	-	-	-	-	-	14	-	-	-	-	-	22	-	-	-	-	-	-	-	57	EA	B-1	
	C-1	EA	-	-	-	-	-	74	-	-	-	-	49	-	-	-	-	-	34	-	-	-	-	-	-	52	26	235	EA	C-1	
	C-2	EA	-	-	-	-	-	5	-	-	-	-	-	-	-	-	-	-	-	7	-	-	-	-	-	-	-	12	EA	C-2	

DESCRIPTION		UNIT	VALVE OR ASSEMBLY NUMBER													SUBTOTALS	UNIT	DESCRIPTION	
			F-1	F-2	F-3	F-4	F-5	F-6	F-7	F-8	F-9	F-10	F-11	F-12	F-13				
PLASTIC PIPE SUPPLY LINE PR 200	1 INCH	LF	90	180	-	-	90	85	180	245	700	150	180	240	180	2320	LF	1 INCH	PLASTIC PIPE SUPPLY LINE PR 200
	1½ INCH	LF	135	140	-	-	135	130	135	-	235	65	270	105	230	1580	LF	1½ INCH	
	2 INCH	LF	180	90	410	400	170	130	-	-	-	510	95	50	40	2075	LF	2 INCH	
	2½ INCH	LF	380	10	-	-	170	330	30	-	-	-	120	165	265	1470	LF	2½ INCH	
SPRINKLER TYPE	A-1	EA	10	10	-	-	10	9	-	-	-	-	13	10	11	73	EA	A-1	SPRINKLER TYPE
	A-5	EA	-	-	-	-	-	-	-	-	-	-	-	-	-	-	EA	A-5	
	B-1	EA	-	-	-	-	-	-	22	-	-	14	-	-	-	36	EA	B-1	
	C-1	EA	-	-	-	-	-	-	-	40	33	-	-	-	-	73	EA	C-1	
	C-2	EA	-	-	-	-	-	-	-	-	-	-	-	-	-	-	EA	C-2	

DESCRIPTION		UNIT	VALVE OR ASSEMBLY NUMBER																				SUBTOTALS	UNIT	DESCRIPTION	
			G-1	G-2	G-3	G-4	G-5	G-6	G-7	G-8	G-9	G-10	G-11	G-12	G-13	G-14	G-15	G-16	G-17	G-18	G-19	G-20				
PLASTIC PIPE SUPPLY LINE PR 200	1 INCH	LF	235	-	275	140	185	90	645	90	105	600	-	-	90	190	330	85	210	900	95	180	4445	LF	1 INCH	PLASTIC PIPE SUPPLY LINE PR 200
	1½ INCH	LF	130	-	130	90	55	135	310	135	165	-	-	-	135	135	-	135	140	-	135	180	2010	LF	1½ INCH	
	2 INCH	LF	65	125	50	230	140	140	195	50	765	-	465	465	180	85	-	-	70	-	180	130	3335	LF	2 INCH	
	2½ INCH	LF	60	-	-	45	-	-	-	425	-	-	-	-	325	10	-	-	-	-	245	-	1100	LF	2½ INCH	
SPRINKLER TYPE	A-1	EA	11	-	10	11	-	7	-	7	-	-	-	-	11	10	-	-	-	-	11	11	89	EA	A-1	SPRINKLER TYPE
	A-5	EA	-	-	-	-	-	-	-	-	-	-	-	-	-	-	-	-	-	-	-	-	-	EA	A-5	
	B-1	EA	-	-	-	-	16	-	-	-	20	-	-	-	-	-	-	15	20	-	-	-	71	EA	B-1	
	C-1	EA	-	-	-	-	-	-	85	-	-	20	-	-	-	-	26	-	-	22	-	-	153	EA	C-1	
	C-2	EA	-	-	-	-	-	-	7	-	-	-	-	-	-	-	-	-	-		-	-	7	EA	C-2	

DESCRIPTION		UNIT	VALVE OR ASSEMBLY NUMBER																							SUBTOTALS	UNIT	DESCRIPTION	
			H-1	H-2	H-3	H-4	H-5	H-6	H-7	H-8	H-9	H-10	H-11	H-12	H-13	H-14	H-15	H-16	H-17	H-18	H-19	H-20	H-21	H-22	H-23				
PLASTIC PIPE SUPPLY LINE PR 200	1 INCH	LF	100	270	90	155	90	-	1120	90	180	90	90	800	130	80	160	120	135	90	90	-	-	-	-	3880	LF	1 INCH	PLASTIC PIPE SUPPLY LINE PR 200
	1½ INCH	LF	165	65	135	135	130	-	325	130	220	135	150	-	290	135	70	125	135	135	135	80	-	-	-	2695	LF	1½ INCH	
	2 INCH	LF	290	130	180	115	180	310	-	175	75	175	-	-	-	135	50	90	45	175	180	140	-	-	-	2445	LF	2 INCH	
	2½ INCH	LF	-	10	85	145	575	-	-	330	15	330	-	-	-	90	-	10	125	200	145	670	-	-	-	2730	LF	2½ INCH	
SPRINKLER TYPE	A-1	EA	-	11	10	10	11	-	-	12	11	11	3	-	-	-	6	-	-	13	13	12	-	-	-	123	EA	A-1	SPRINKLER TYPE
	A-5	EA	-	-	-	-	-	-	-	-	-	-	-	-	-	10	-	9	-	-	-	-	-	-	-	19	EA	A-5	
	B-1	EA	17	-	-	-	-	-	-	-	-	-	-	-	10	-	-	-	21	-	-	-	-	-	-	48	EA	B-1	
	C-1	EA	-	-	-	-	-	-	108	-	-	-	-	28	-	-	-	-	-	-	-	-	-	-	-	136	EA	C-1	
	C-2	EA	-	-	-	-	-	-	-	-	-	-	-	-	-	-	-	-	-	-	-	-	-	-	-	-	EA	C-2	

IRRIGATION QUANTITIES
IQ-1

STATE OF CALIFORNIA - DEPARTMENT OF TRANSPORTATION
Caltrans® LANDSCAPE ARCHITECTURE

SENIOR LANDSCAPE ARCHITECT: DENNIS REEVES
CALCULATED-DESIGNED BY: DAVID EMERSON
CHECKED BY: PATRICK BOLGER
REVISED BY / DATE REVISED

LAST REVISION: 08-03-10
DATE PLOTTED => 06-OCT-2010
TIME PLOTTED => 13:29

Dist	COUNTY	ROUTE	POST MILES TOTAL PROJECT	SHEET No.	TOTAL SHEETS
05	Mon	101	86.6/R87.7	23	43

LICENSED LANDSCAPE ARCHITECT

9-13-10
PLANS APPROVAL DATE

LICENSED LANDSCAPE ARCHITECT
Patrick Bolger
No. 3471
11-30-2010
Renewal Date
8-3-2010
Date
STATE OF CALIFORNIA

THE STATE OF CALIFORNIA OR ITS OFFICERS OR AGENTS SHALL NOT BE RESPONSIBLE FOR THE ACCURACY OR COMPLETENESS OF SCANNED COPIES OF THIS PLAN SHEET.

ABBREVIATIONS:

ARV — air relief valve
CEC — controller enclosure cabinet
EA — each
WS — wye strainer
FS — flow sensor
GSP — galvanized steel pipe
GV — gate valve
BV — ball valve
LF — linear feet
PR — pressure rated
RCV — remote control valve
SCC — sprinkler control conduit

SUBTOTALS PER PLAN SHEET ON MAIN SUPPLY SIDE OF CONTROL VALVE

DESCRIPTION			UNIT	SHEET NUMBER IP-1	IP-2	IP-3	IP-4	IP-5	SUBTOTALS
IRRIGATION CONTROLLER		32 STATION	EA	-	-	1	-	-	1
VALVES AND ASSEMBLIES	RCV	1 INCH	EA	-	7	-	4	-	11
		1½ INCH	EA	9	23	13	14	8	67
	GV	3 INCH	EA	2	6	2	3	-	13
		4 INCH	EA	-	1	3	2	-	6
	BV	2½ INCH	EA	2	5	2	3	2	14
	CARV	1 INCH	EA	2	2	2	1	1	8
PLASTIC PIPE SUPPLY LINE	PR 200	1 INCH	LF	-	-	-	-	-	-
		1½ INCH	LF	-	-	-	-	-	-
		2 INCH	LF	-	-	-	-	-	-
		2½ INCH	LF	-	-	-	-	-	-
	PR 315	2½ INCH	LF	175	660	250	210	180	1475
		3 INCH	LF	1340	1475	1000	2575	1115	7505
		4 INCH	LF	-	910	1300	1025	-	3235
GSP		4 INCH	LF	80	170	-	-	-	250
GSP SUPPLY LINE (BRIDGE)		4 INCH	LF	-	-	75	25	-	100
SCC (BRIDGE)		2 INCH	LF	-	-	75	25	-	100
SCC (N)		2 INCH	LF	80	170	-	-	-	250

(N) - NOT A SEPARATE PAY ITEM, FOR INFORMATION ONLY. PART OF CONTROL AND NEUTRAL CONDUCTORS.

TOTAL QUANTITIES

TOTALS	UNIT	DESCRIPTION		
1	EA	32 STATION		IRRIGATION CONTROLLER
11	EA	1 INCH	RCV	VALVES AND ASSEMBLIES
67	EA	1½ INCH	RCV	
13	EA	3 INCH	GV	
6	EA	4 INCH	GV	
14	EA	2½ INCH	BV	
8	EA	1 INCH	CARV	
18,710	LF	1 INCH	PR 200	SUPPLY LINE PLASTIC PIPE
11,000	LF	1½ INCH	PR 200	
12,215	LF	2 INCH	PR 200	
7710	LF	2½ INCH	PR 200	
1475	LF	2½ INCH	PR 315	
7505	LF	3 INCH	PR 315	
3235	LF	4 INCH	PR 315	
250	LF	4 INCH		GSP
100	LF	4 INCH		GSP SUPPLY LINE (BRIDGE)
100	LF	2 INCH		SCC (BRIDGE)
250	LF	2 INCH		SCC (N)
437	EA	A-1		SPRINKLER TYPE
19	EA	A-5		
212	EA	B-1		
597	EA	C-1		
19	EA	C-2		

(N) - NOT A SEPARATE PAY ITEM, FOR INFORMATION ONLY. PART OF CONTROL AND NEUTRAL CONDUCTORS.

IRRIGATION QUANTITIES
IQ-2

STATE OF CALIFORNIA - DEPARTMENT OF TRANSPORTATION
Caltrans® LANDSCAPE ARCHITECTURE

SENIOR LANDSCAPE ARCHITECT: DENNIS REEVES
CALCULATED-DESIGNED BY: PATRICK BOLGER
CHECKED BY: DAVID EMERSON
REVISED BY
DATE REVISED

LAST REVISION 08-03-10
DATE PLOTTED => 07-OCT-2010
TIME PLOTTED => 13:59

Dist	COUNTY	ROUTE	POST MILES TOTAL PROJECT	SHEET No.	TOTAL SHEETS
05	Mon	101	86.6/R87.7	24	43

Xavier Alfaro 8-3-10
REGISTERED ELECTRICAL ENGINEER DATE

9-13-10
PLANS APPROVAL DATE

REGISTERED PROFESSIONAL ENGINEER XAVIER I. ALFARO No. E17488 Exp. 6-30-11 ELECTRICAL STATE OF CALIFORNIA

THE STATE OF CALIFORNIA OR ITS OFFICERS OR AGENTS SHALL NOT BE RESPONSIBLE FOR THE ACCURACY OR COMPLETENESS OF SCANNED COPIES OF THIS PLAN SHEET.

NOTES:

1. FOR ACCURATE RIGHT OF WAY AND ACCESS DATA, CONTACT RIGHT OF WAY ENGINEERING AT THE DISTRICT OFFICE.

[2] TYPE C TELEPHONE DEMARCATION CABINET.

ABBREVIATIONS:

CTID = CALTRAN INDENTIFICATION

PG&E = PACIFIC GAS AND ELECTRIC

AT&T = AMERICAN TELEPHONE AND TELEGRAPH

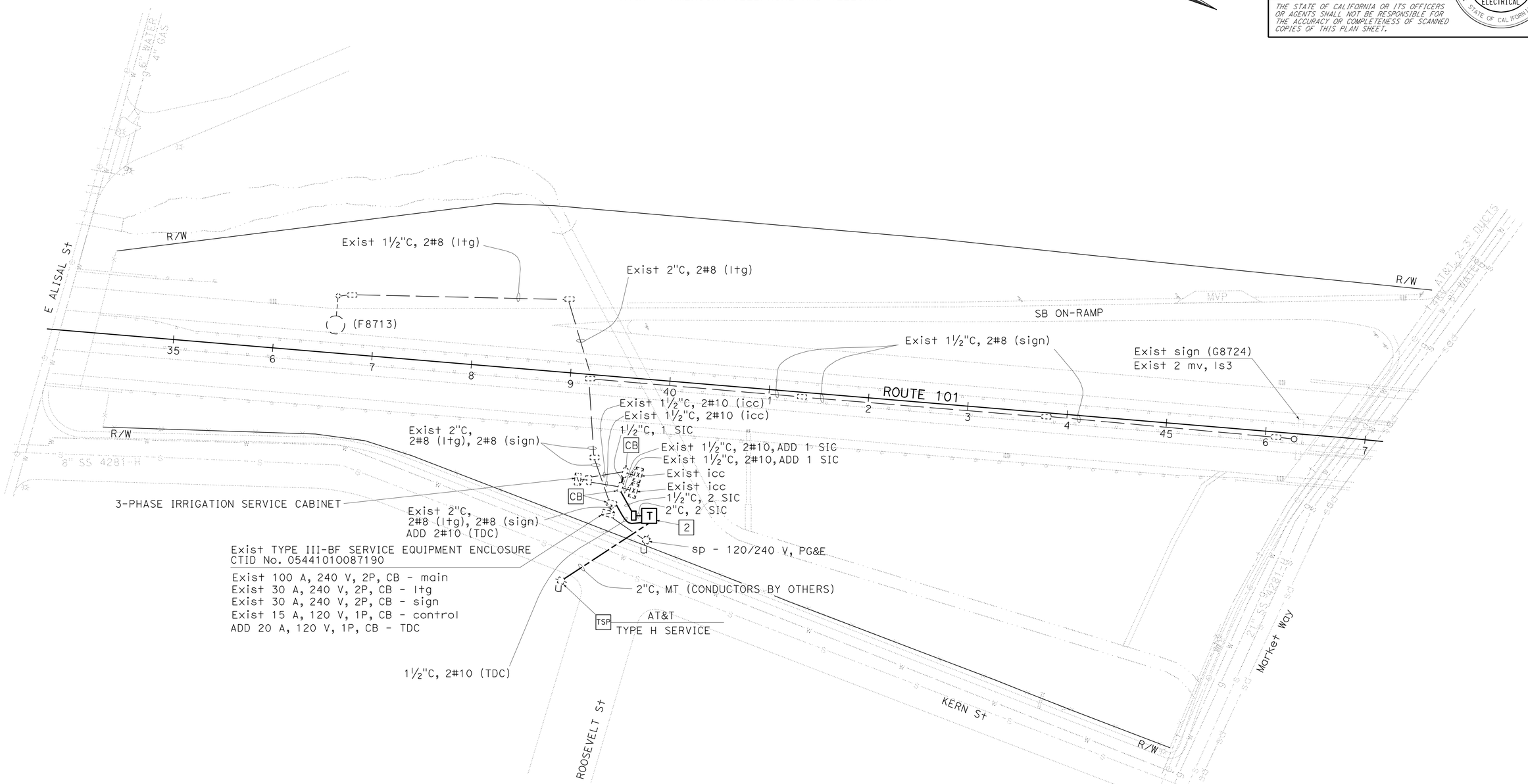

THIS PLAN IS ACCURATE FOR ELECTRICAL WORK ONLY.

TELEPHONE SERVICE (IRRIGATION)

SCALE: 1" = 50'

E-1

STATE OF CALIFORNIA - DEPARTMENT OF TRANSPORTATION
Caltrans® ELECTRICAL DESIGN

FUNCTIONAL SUPERVISOR: ALI BAKHDOUD
CALCULATED-DESIGNED BY: XAVIER ALFARO
CHECKED BY: PAUL MATOS
REVISED BY
DATE REVISED

LAST REVISION 08-03-10 | DATE PLOTTED => 06-OCT-2010 | TIME PLOTTED => 13:35

Dist	COUNTY	ROUTE	POST MILES TOTAL PROJECT	SHEET No.	TOTAL SHEETS
05	Mon	101	86.6/R87.7	25	43

REGISTERED CIVIL ENGINEER 8-3-10 DATE

9-13-10
PLANS APPROVAL DATE

REGISTERED PROFESSIONAL ENGINEER FAWZI YAGHMOUR No. C-54750 Exp. 12-31-11 CIVIL STATE OF CALIFORNIA

THE STATE OF CALIFORNIA OR ITS OFFICERS OR AGENTS SHALL NOT BE RESPONSIBLE FOR THE ACCURACY OR COMPLETENESS OF SCANNED COPIES OF THIS PLAN SHEET.

NOTES:

1. EXACT LOCATION AND POSITION OF CONSTRUCTION AREA SIGNS TO BE DETERMINED BY THE ENGINEER.
2. CALIFORNIA SIGN CODES ARE DESIGNATED BY (CA), OTHERWISE FEDERAL MUTCD SIGNS ARE SHOWN.

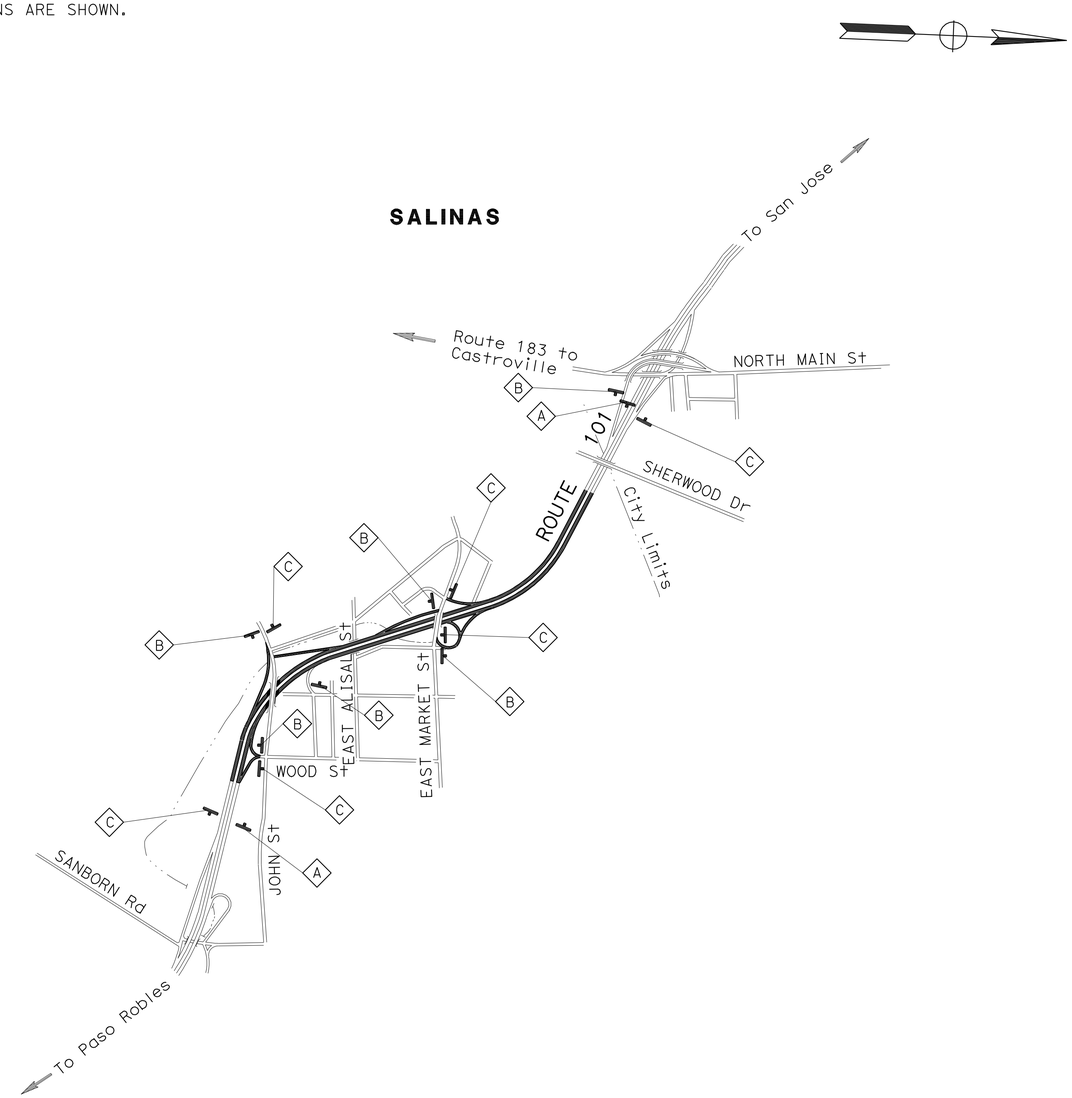

STATIONARY MOUNTED CONSTRUCTION AREA SIGNS

SIGN No.	SIGN CODE	PANEL SIZE	No. OF POSTS AND SIZE	No. OF SIGNS	SIGN MESSAGE	REMARKS
A	W20-1	48" X 48"	1-6" X 6"	2	ROAD WORK AHEAD	
B	W20-1	30" X 30"	1-4" X 4"	6	ROAD WORK AHEAD	
C	G2-2(CA)	24" X 36"	1-4" X 4"	6	END ROAD WORK	

THIS PLAN ACCURATE FOR CONSTRUCTION AREA SIGNS.

CONSTRUCTION AREA SIGNS

NO SCALE

CS-1

STATE OF CALIFORNIA - DEPARTMENT OF TRANSPORTATION
Caltrans TRAFFIC DESIGN

FUNCTIONAL SUPERVISOR: MOHAMMED QUATAMI
CALCULATED-DESIGNED BY: DAVID BLACK
CHECKED BY: FAWZI YAGHMOUR
REVISED BY
DATE REVISED

LAST REVISION 08-03-10 | DATE PLOTTED => 06-OCT-2010 | TIME PLOTTED => 13:35

DIST	COUNTY	ROUTE	POST MILES TOTAL PROJECT	SHEET NO.	TOTAL SHEETS
05	Mon	101	86.6/R87.7	26	43

REGISTERED CIVIL ENGINEER

June 5, 2009
PLANS APPROVAL DATE

REGISTERED PROFESSIONAL ENGINEER Glenn DeCou No. C34547 Exp. 9-30-09 CIVIL STATE OF CALIFORNIA

The State of California or its officers or agents shall not be responsible for the accuracy or completeness of electronic copies of this plan sheet.

To accompany plans dated 9-13-10

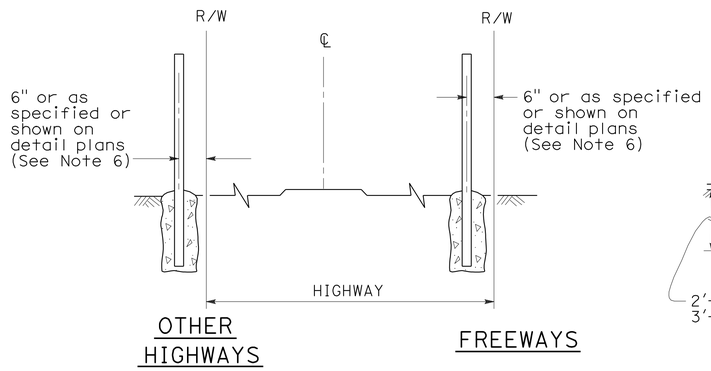

FENCE LOCATION

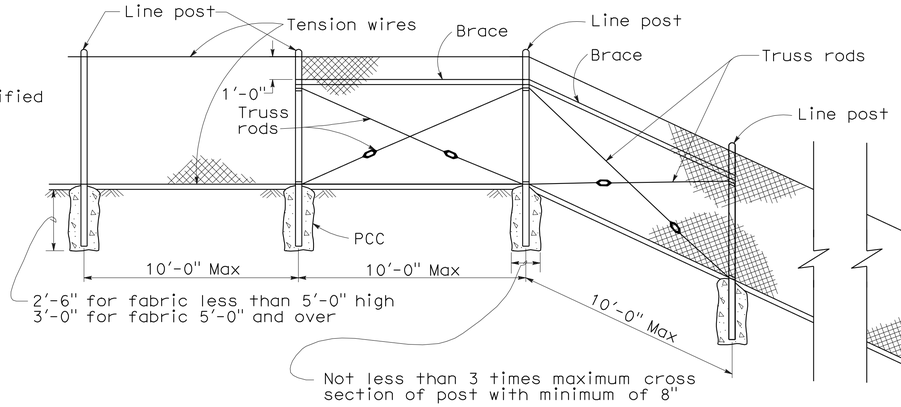

CHAIN LINK FENCE ON SHARP BREAK IN GRADE

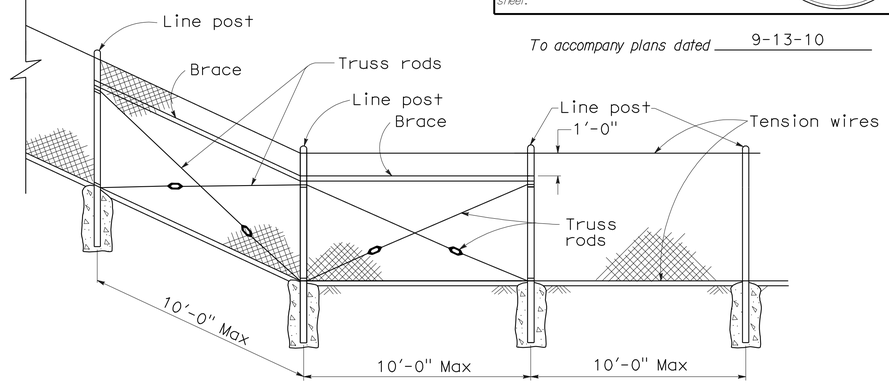

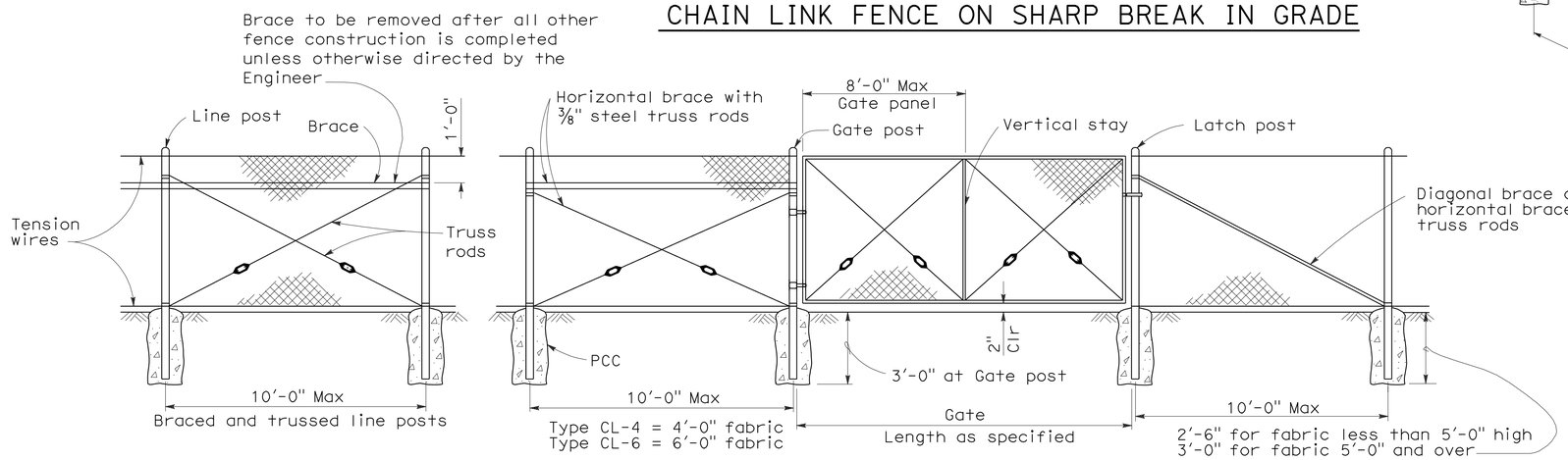

CHAIN LINK GATE INSTALLATION

GATE POST			
FENCE HEIGHT	GATE WIDTHS	NOMINAL ID	WEIGHT PER FOOT
6'-0" and Less	Up thru 6'-0"	2½"	4.95 LB
	Over 6'-0" thru 12'-0"	4"	10.79 LB
	Over 12'-0" thru 18'-0"	5"	14.62 LB
	Over 18'-0" to 24'-0" Max	6"	18.97 LB
Over 6'-0"	Up thru 6'-0"	3"	7.58 LB
	Over 6'-0" thru 12'-0"	5"	14.62 LB
	Over 12'-0" thru 18'-0"	6"	18.97 LB
	Over 18'-0" to 24'-0" Max	8"	28.55 LB

Above post dimensions and weights are minimums. Larger sizes may be used on approval of the Engineer.

NOTES:

1. The below table shows examples of post and brace sections which may comply with the Specifications.
2. Sections shown in the tables must also comply with the strength requirements and other provisions of the Specifications.
3. Other sections which comply with the strength requirements and other provisions of the Specifications may be used on approval of the Engineer.
4. Options exercised shall be uniform on any one project.
5. Dimensions shown are nominal.
6. Offset to be 2'-0" at monument locations, measured at right angles to R/W lines. Taper to achieve offset to be at least 20'-0" long.

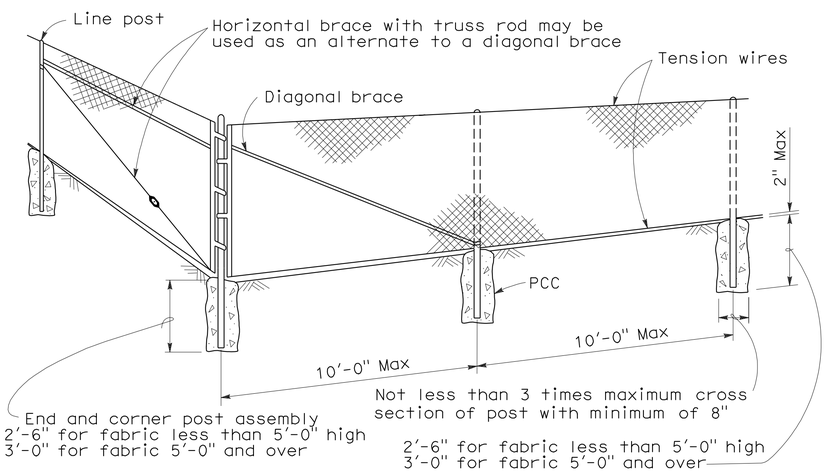

CORNER POST

TYPICAL MEMBER DIMENSIONS (See Notes)											
FENCE HEIGHT	LINE POSTS			END, LATCH & CORNER POSTS			BRACES				
	ROUND ID	H	ROLL FORMED	ROUND ID	ROLL FORMED		ROUND ID	H	ROLL FORMED		
6' & less	1½"	1⅞" × 1⅝"	1⅞" × 1⅝"	2"	3½" × 3½"	2" × 1¾"	1¼"	1½" × 1 5/16"	1⅝" × 1¼"	1¾" × 1¼"	
Over 6'	2"	2¼" × 2"	2" × 1¾"	2½"	3½" × 3½"	2½" × 2½"	1¼"	1½" × 1 5/16"	1⅝" × 1¼"	1¾" × 1¼"	

STATE OF CALIFORNIA
DEPARTMENT OF TRANSPORTATION

CHAIN LINK FENCE

NO SCALE

RSP A85 DATED JUNE 5, 2009 SUPERSEDES STANDARD PLAN A85
DATED MAY 1, 2006 - PAGE 111 OF THE STANDARD PLANS BOOK DATED MAY 2006.

REVISED STANDARD PLAN RSP A85

2006 REVISED STANDARD PLAN RSP A85

5-7-09

DIST	COUNTY	ROUTE	POST MILES TOTAL PROJECT	SHEET NO.	TOTAL SHEETS
05	Mon	101	86.6/R87.7	27	43

REGISTERED CIVIL ENGINEER

June 5, 2009
PLANS APPROVAL DATE

REGISTERED PROFESSIONAL ENGINEER Glenn DeCou No. C34547 Exp. 9-30-09 CIVIL STATE OF CALIFORNIA

The State of California or its officers or agents shall not be responsible for the accuracy or completeness of electronic copies of this plan sheet.

To accompany plans dated 9-13-10

NOTES:

1. H is 2'-6" for fabric less than 5'-0" high. H is 3'-0" for fabric 5'-0" and over.
2. T is not less than 3 times maximum cross section of post with minimum of 8".
3. Arms with barbed wire to be used where shown on plans.
4. See Revised Standard Plan RSP A85 for Chain Link Fencing dimensions.
5. Reinforcing must comply with ASTM A 706.
6. See Detail A on New Standard Plan NSP A86B for connection at headwall.

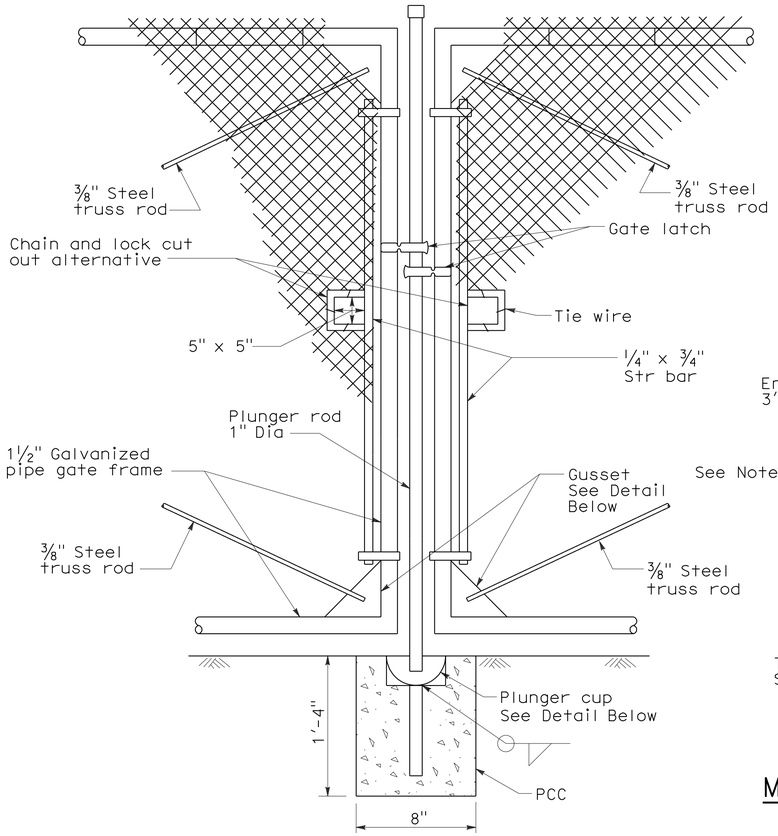

TYPICAL DOUBLE GATE REMOVABLE CENTER POST

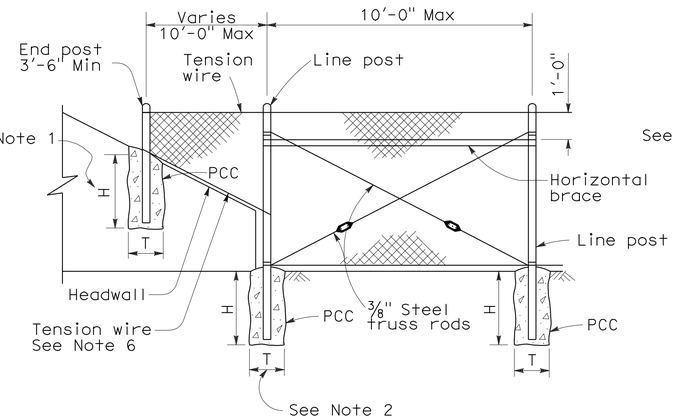

METHOD OF TYING FENCE TO HEADWALL

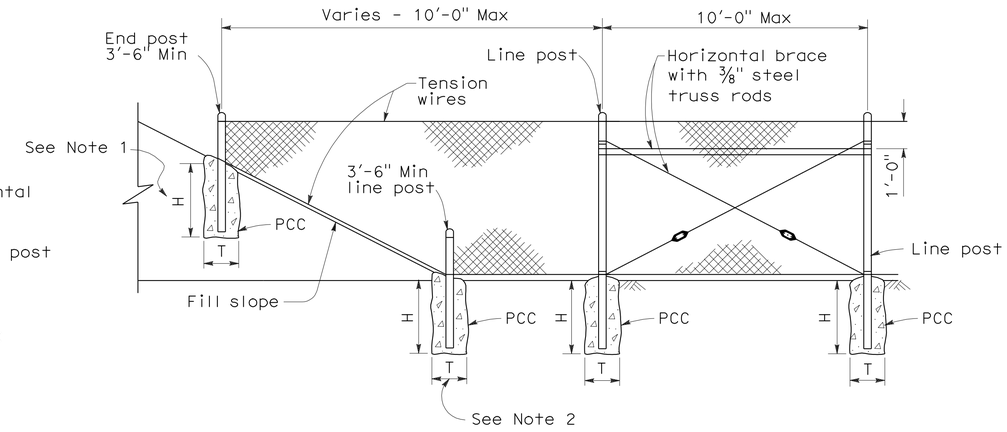

METHOD OF ERECTING FENCE FOR FILL SLOPE

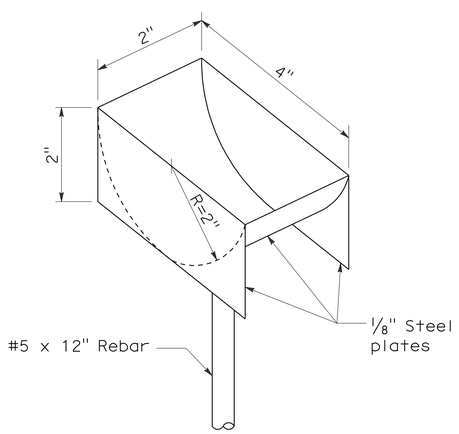

PLUNGER CUP DETAIL

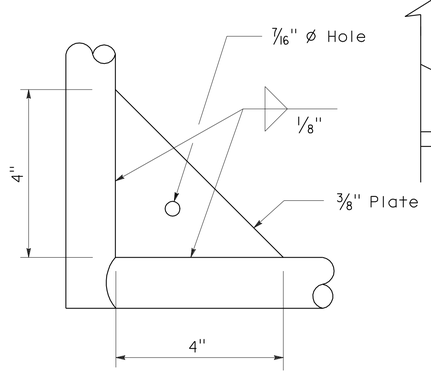

GUSSET DETAIL

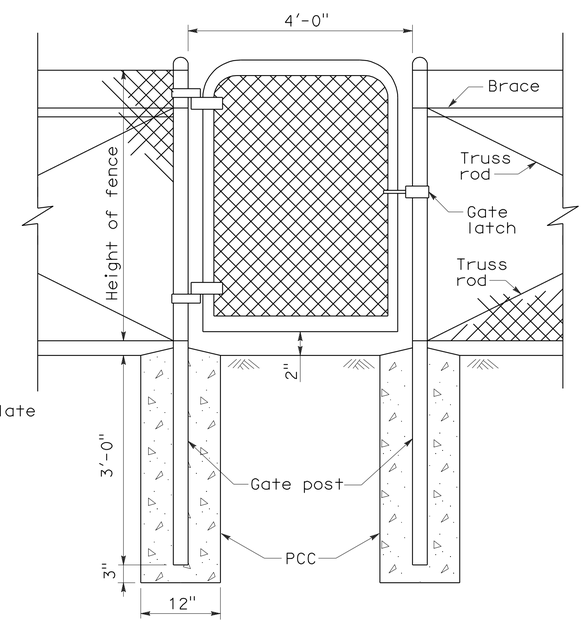

WALK GATE

POST TOP END

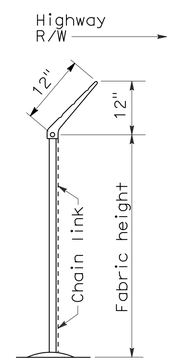

END ELEVATION

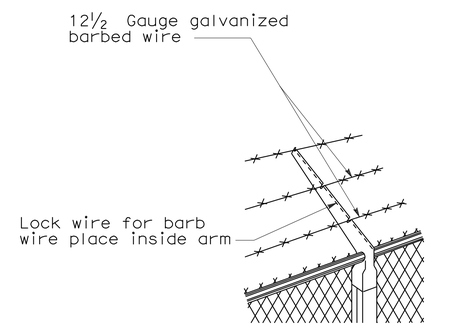

LINE POST TOP
Vertical arms when desired

BARBED WIRE POST TOP
See Note 3

STATE OF CALIFORNIA
DEPARTMENT OF TRANSPORTATION

CHAIN LINK FENCE DETAILS

NO SCALE

NSP A85A DATED JUNE 5, 2009 SUPPLEMENTS THE STANDARD PLANS BOOK DATED MAY 2006.

NEW STANDARD PLAN NSP A85A

2006 NEW STANDARD PLAN NSP A85A

5-7-09

DIST	COUNTY	ROUTE	POST MILES TOTAL PROJECT	SHEET NO.	TOTAL SHEETS
05	Mon	101	86.6/R87.7	28	43

Glenn DeCou
REGISTERED CIVIL ENGINEER

June 5, 2009
PLANS APPROVAL DATE

REGISTERED PROFESSIONAL ENGINEER
Glenn DeCou
No. C34547
Exp. 9-30-09
CIVIL
STATE OF CALIFORNIA

The State of California or its officers or agents shall not be responsible for the accuracy or completeness of electronic copies of this plan sheet.

To accompany plans dated 9-13-10

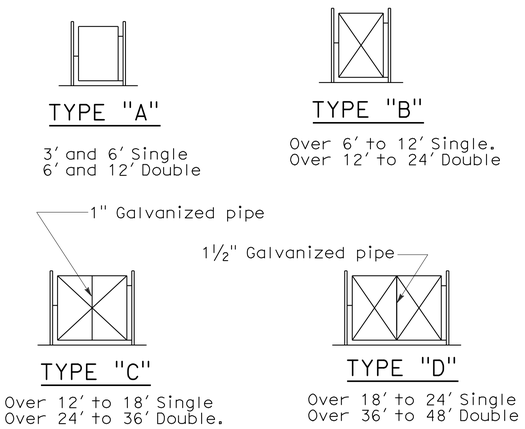

TYPICAL FRAMEWORK SHOWING NUMBER OF BAYS IN GATE

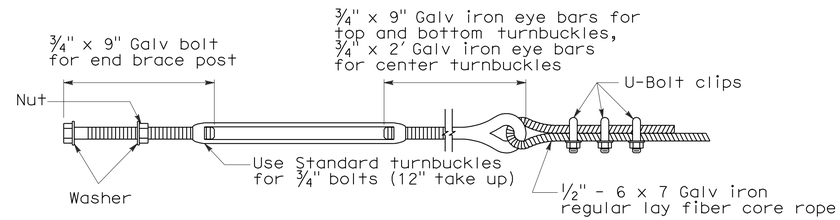

TURNBUCKLE A

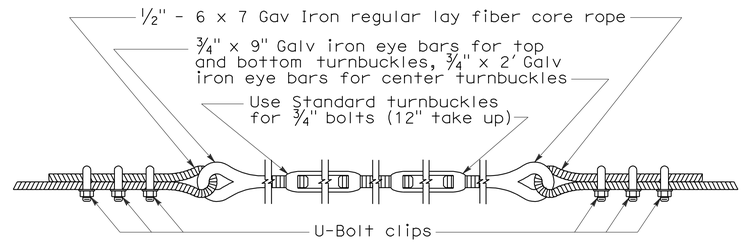

TURNBUCKLE B

NOTES:

1. All material for abutment connection to be galvanized.
2. The chain link fabric shall be replaced by barbed wire strands at 12" maximum centers between the double posts.
3. When the width of the culvert makes it necessary to anchor a post to the top of the culvert, a cast iron shoe or other device approved by the Engineer shall be used.
4. Fencing over stream and around headwall may also use Barbed Wire or Wire Mesh fencing with either wood post or steel post installation.
5. See Revised Standard Plan RSP A85 for Chain Link fence dimensions. See Standard Plan A86 for Barbed Wire and Wire Mesh fence dimensions and for wood post and steel post installation.

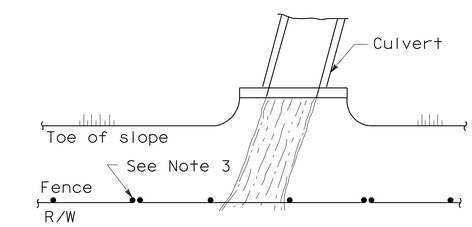

PLAN

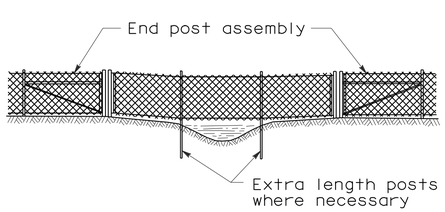

ELEVATION

INSTALLATION OVER STREAM

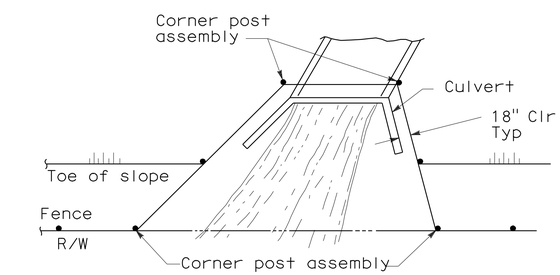

PLAN

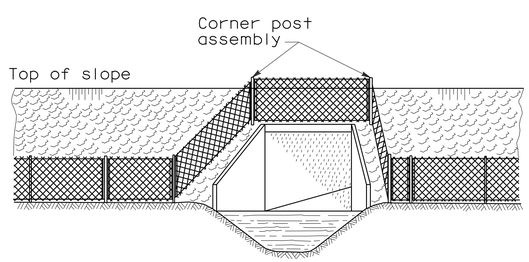

ELEVATION

INSTALLATION AROUND HEADWALL

See Note 4

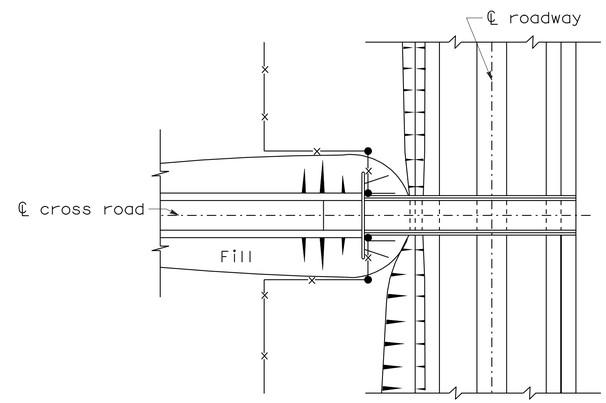

PLAN OF ROADWAY - UNDERPASS

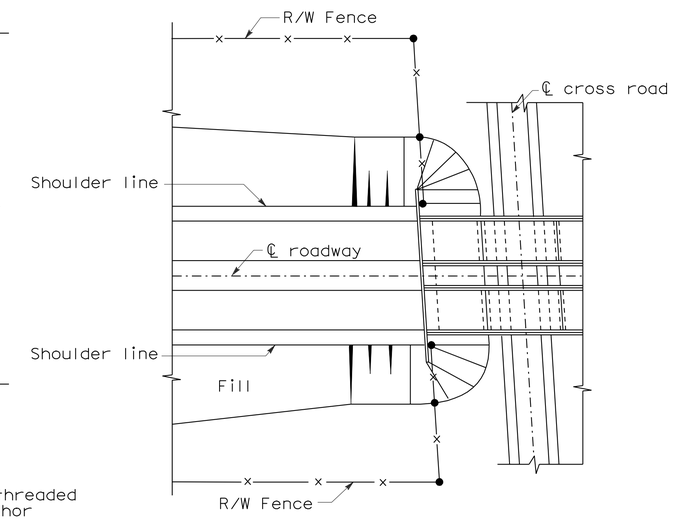

PLAN OF ROADWAY - OVERPASS

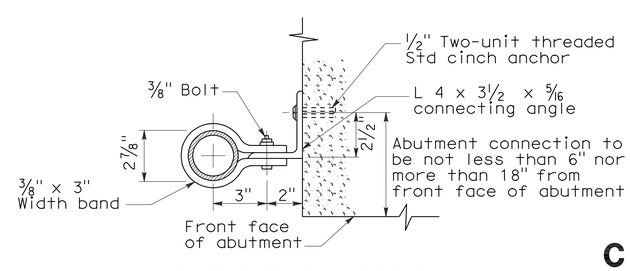

ABUTMENT CONNECTION

TYPICAL INSTALLATION AT BRIDGES

STATE OF CALIFORNIA
DEPARTMENT OF TRANSPORTATION

CHAIN LINK FENCE DETAILS

NO SCALE

NSP A85B DATED JUNE 5, 2009 SUPPLEMENTS THE STANDARD PLANS BOOK DATED MAY 2006.

NEW STANDARD PLAN NSP A85B

2006 NEW STANDARD PLAN NSP A85B

5-12-09

DIST	COUNTY	ROUTE	POST MILES TOTAL PROJECT	SHEET NO.	TOTAL SHEETS
05	Mon	101	86.6/R87.7	29	43

Gregory A. Balzer
LICENSED LANDSCAPE ARCHITECT

June 5, 2009
PLANS APPROVAL DATE

LICENSED LANDSCAPE ARCHITECT Gregory A. Balzer 2516 10 expiration 2-28-11 (renewal) date 5-14-09 date STATE OF CALIFORNIA

The State of California or its officers or agents shall not be responsible for the accuracy or completeness of electronic copies of this plan sheet.

To accompany plans dated 9-13-10

A

AB	aggregate base
ABS	acrylonitrile-butadiene-styrene
AC	asphalt concrete
Adj	adjacent/adjustable
AIC	auxiliary irrigation controller
Alt	alternative
AMEND	amendment
ARV	air release valve
AUTO	automatic
AUX	auxiliary
AVB	atmospheric vacuum breaker

B

B&B	balled and burlapped
B/B	brass/bronze
B/B/PL	brass/bronze/plastic
B/PL	brass/plastic
BFM	bonded fiber matrix
Bit Ctd	bituminous coated
BP	booster pump
BPA	backflow preventer assembly
BPAE	backflow preventer assembly in enclosure
BPE	backflow preventer enclosure
BV	ball valve

C

CAP	corrugated aluminum pipe
CARV	combination air release valve
CCA	cam coupler assembly
CEC	controller enclosure cabinet
CHDPE	corrugated high density polyethylene
CL	chain link
CNC	control and neutral conductors
Conc	concrete
Cond	conduit
CSP	corrugated steel pipe
CST	center strip
CV	check valve

D

Dia	diameter
DIP	ductile iron pipe
DN	diameter nominal

E

EA	each
Elect	electric/electrical
Elev	elevation
ENCL	enclosure
EP	edge of pavement
ES	edge of shoulder
EST	end strip
ESTB	establishment
ETW	edge of traveled way

F

F	full circle
F/P	full/part circle
FAU	filter assembly unit
FCV	flow control valve
FERT	fertilizer
FG	finished grade
FIPT	female iron pipe thread
FIS	fertilizer injector system
FL	flow line
FM	flow monitor
FS	flow sensor
Ft	foot/feet
FV	flush valve

G

GAL	Gallon(s)
Galv	galvanized
GARV	garden valve
GPH	gallons per hour
GPM	gallons per minute
GSP	galvanized steel pipe
GV	gate valve

H

H	half circle
HB	hose bib
HDPE	high density polyethylene
HP	horsepower/hinge point
HPL	high pressure line
Hwy	highway

I

IC	irrigation controller
ICC	irrigation controller(s) in controller enclosure cabinet
ID	inside diameter
In	inches
IFS	irrigation filtration system
IPS	iron pipe size
IPT	iron pipe thread
Irr	irrigation

L

L	length
LF	linear foot

M

Max	maximum
MBGR	metal beam guard railing
MCV	manual control valve
MIC	master irrigation controller
Min	minimum
MIPT	male iron pipe thread
Misc	miscellaneous
Mtl	material
MVP	maintenance vehicle pullout

N

NCN	no common name
NL	nozzle line
No.	number
NPT	national pipe thread

O

O/C	on center
OD	outside diameter
Oz	ounce

P

P	part circle
PB	pull box
PCC	portland cement concrete
PE	polyethylene
Pkt	packet
PL	plastic
PLT	plant/planting
PLT ESTB	plant establishment
PM	post mile
PR	pressure rated
PRLV	pressure relief valve
PSFM	polymer stabilized fiber matrix
PSI	pounds per square inch
PRV	pressure reducing valve
PVC	polyvinyl chloride
Pvmt	pavement

Q

Q	quarter circle
QCV	quick coupling valve

R

R	radius
RCP	reinforced concrete pipe
RCV	remote control valve
RCVM	remote control valve (master)
RCVMF	remote control valve (master) w/ flow meter
RCW	recycled/reclaimed water
RECP	rolled erosion control product
REQ	required
R/W	right of way

S

S	slip
SCC	sprinkler control conduit
SCH	schedule
SF	state-furnished
Shld	shoulder
SQFT	square foot/feet
SQYD	square yard(s)
SST	side strip
Sta	station
Std	standard
SW	sidewalk/sound wall

T

T	third circle/thread
TLS	truck loading standpipe
TQ	three quarter circle
TRM	turf reinforcement mat
TRVD	traveled
TT	two third circle
Typ	typical

U

UG	underground

V

VAU	valve assembly unit

W

W	width
W/	with
WM	water meter
WS	wye strainer
WSP	welded steel pipe
WWM	welded wire mesh

NOTE:

FOR ADDITIONAL ABBREVIATIONS, SEE STANDARD PLANS A10A AND A10B.

STATE OF CALIFORNIA
DEPARTMENT OF TRANSPORTATION

PLANTING AND IRRIGATION ABBREVIATIONS

NO SCALE

RSP H1 DATED JUNE 5, 2009 SUPERSEDES STANDARD PLAN H1
DATED MAY 1, 2006 - PAGE 201 OF THE STANDARD PLANS BOOK DATED MAY 2006.

REVISED STANDARD PLAN RSP H1

2006 REVISED STANDARD PLAN RSP H1

DIST	COUNTY	ROUTE	POST MILES TOTAL PROJECT	SHEET NO.	TOTAL SHEETS
05	Mon	101	86.6/R87.7	30	43

LICENSED LANDSCAPE ARCHITECT

June 5, 2009
PLANS APPROVAL DATE

The State of California or its officers or agents shall not be responsible for the accuracy or completeness of electronic copies of this plan sheet.

LICENSED LANDSCAPE ARCHITECT — Gregory A. Balzer — 2516 — 10 January — 2-28-11 (Renewal Date) — 5-14-09 (Date) — STATE OF CALIFORNIA

To accompany plans dated 9-13-10

EXISTING	PROPOSED	ITEM DESCRIPTION
		WATER METER (WM)
		BACKFLOW PREVENTER ASSEMBLY (BPA)
		BACKFLOW PREVENTER ASSEMBLY IN ENCLOSURE (BPAE)
		BACKFLOW PREVENTER ENCLOSURE (BPE)
		BOOSTER PUMP (BP)
		TRUCK LOADING STANDPIPE (TLS)
FS	FS	FLOW SENSOR (FS)
X	X	MASTER IRRIGATION CONTROLLER (MIC)
		AUXILIARY IRRIGATION CONTROLLER (AIC)
		IRRIGATION CONTROLLER (IC)/ IRRIGATION CONTROLLER (IC) (BATTERY) IRRIGATION CONTROLLER (IC) (SOLAR)
		IRRIGATION CONTROLLER(S) IN CONTROLLER ENCLOSURE CABINET (ICC)
		CONTROL AND NEUTRAL CONDUCTORS (CNC)
SCC	SCC	SPRINKLER CONTROL CONDUIT (SCC)
		IRRIGATION CROSSOVER
		EXTEND IRRIGATION CROSSOVER
		IRRIGATION SLEEVE
dip	DIP	DUCTILE IRON PIPE (SUPPLY LINE) (MAIN) (DIP)
		GALVANIZED STEEL PIPE (SUPPLY LINE) (MAIN) (GSP)
		GALVANIZED STEEL PIPE (SUPPLY LINE) (LATERAL) (GSP)
		PLASTIC PIPE (PR 200) (SUPPLY LINE) (MAIN)
		PLASTIC PIPE (PR 200) (SUPPLY LINE) (LATERAL)
		PLASTIC PIPE (IRRIGATION LINE)
		REMOTE CONTROL VALVE (RCV) REMOTE CONTROL VALVE (MASTER) (RCVM) REMOTE CONTROL VALVE (MASTER) W/FLOW METER (RCVMF)
		MANUAL CONTROL VALVE (MCV)
		VALVE ASSEMBLY UNIT (VAU)
		WYE STRAINER (WS)
		FILTER ASSEMBLY UNIT (FAU)
		GATE VALVE (GV)
		BALL VALVE (BV)

EXISTING	PROPOSED	ITEM DESCRIPTION
		QUICK COUPLING VALVE (QCV)
		CAM COUPLER ASSEMBLY (CCA)
		PRESSURE REDUCING VALVE (PRV)
		PRESSURE RELIEF VALVE (PRLV)
		FLOW CONTROL VALVE (FCV)
		COMBINATION AIR RELEASE VALVE (CARV)
		CHECK VALVE (CV)
		FLUSH VALVE (FV)
		NOZZLE LINE W/TURNING UNION
		IRRIGATION SYSTEM
		IRRIGATION SYSTEM TO BE REMOVED
		CHAIN LINK GATE
		QUICK COUPLING VALVE W/SPRINKLER PROTECTOR
3	3	SPRINKLER W/SPRINKLER PROTECTOR
	C	CONNECT TO EXISTING SYSTEM
		CAP
		CAP EXISTING

VALVE CODE

RCV SIZE
IRRIGATION CONTROLLER
CONTROLLER STATION
VALVE IN PARALLEL (IF APPLICABLE)
GPM
QUANTITY OF SPRINKLERS (WHEN SHOWN)

* 2½"-A-2b-40 -60

MCV SIZE
VALVE NUMBER
GPM
QUANTITY OF TYPE SPRINKLERS (WHEN SHOWN)

* 2"-3-30 -50

* VALVE CODES FOR EXISTING VALVES ARE SHOWN IN A DASHED ENCLOSURE.

STATE OF CALIFORNIA
DEPARTMENT OF TRANSPORTATION

PLANTING AND IRRIGATION SYMBOLS

NO SCALE

RSP H2 DATED JUNE 5, 2009 SUPERSEDES RSP H2 DATED MARCH 7, 2008 AND STANDARD PLAN H2 DATED MAY 1, 2006 - PAGE 202 OF THE STANDARD PLANS BOOK DATED MAY 2006.

REVISED STANDARD PLAN RSP H2

2006 REVISED STANDARD PLAN RSP H2

5-11-09

DIST	COUNTY	ROUTE	POST MILES TOTAL PROJECT	SHEET NO.	TOTAL SHEETS
05	Mon	101	86.6/R87.7	31	43

LICENSED LANDSCAPE ARCHITECT

June 5, 2009
PLANS APPROVAL DATE

The State of California or its officers or agents shall not be responsible for the accuracy or completeness of electronic copies of this plan sheet.

LICENSED LANDSCAPE ARCHITECT
Gregory A. Balzer 2516
10-28-11
Renewal Date
5-14-09
Date
STATE OF CALIFORNIA

To accompany plans dated 9-13-10

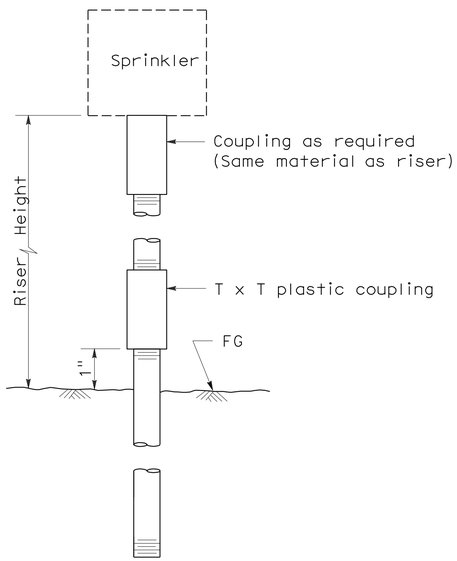

ELEVATION
RISER TYPE I

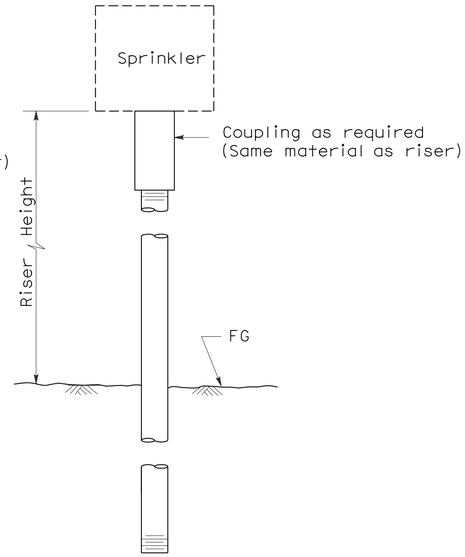

ELEVATION
RISER TYPE II

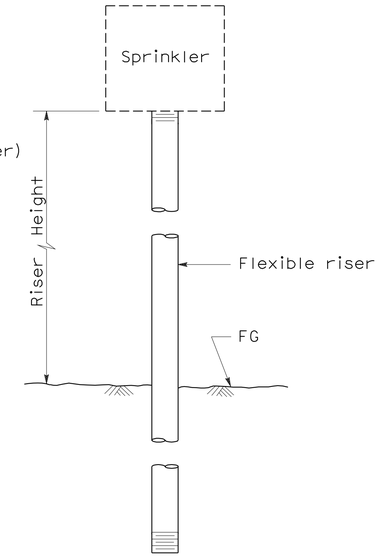

ELEVATION
RISER TYPE III

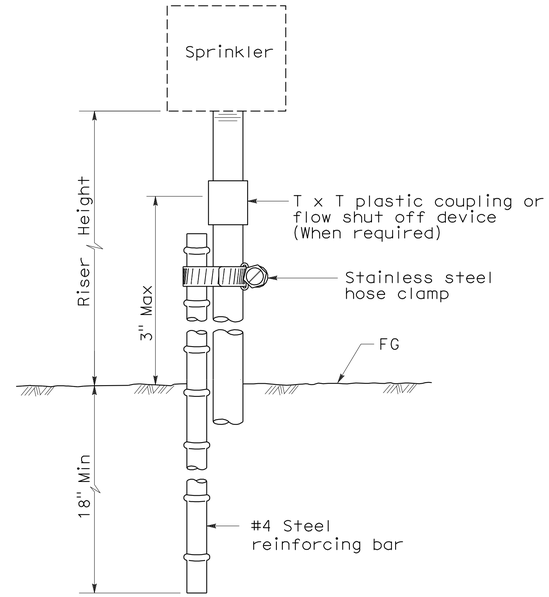

ELEVATION
RISER TYPE IV

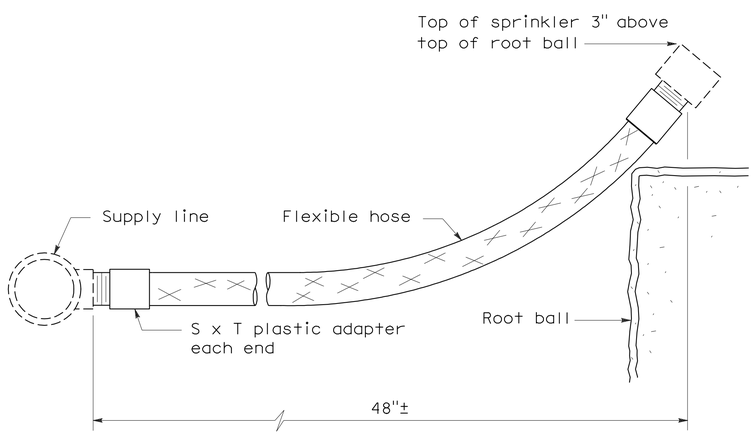

ELEVATION
RISER TYPE V

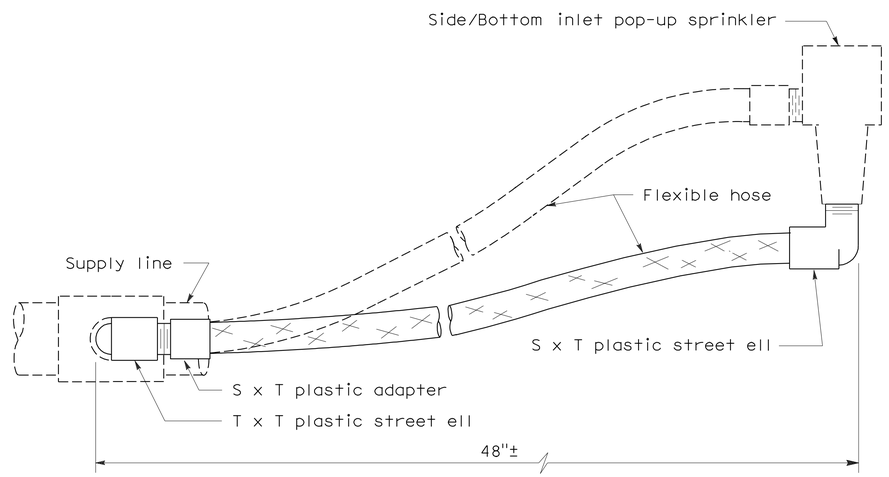

ELEVATION
RISER TYPE VI

STATE OF CALIFORNIA
DEPARTMENT OF TRANSPORTATION

PLANTING AND IRRIGATION DETAILS

NO SCALE

RSP H5 DATED JUNE 5, 2009 SUPERSEDES STANDARD PLAN H5
DATED MAY 1, 2006 - PAGE 205 OF THE STANDARD PLANS BOOK DATED MAY 2006.

REVISED STANDARD PLAN RSP H5

2006 REVISED STANDARD PLAN RSP H5

5-28-09

DIST	COUNTY	ROUTE	POST MILES TOTAL PROJECT	SHEET NO.	TOTAL SHEETS
05	Mon	101	86.6/R87.7	32	43

Gregory A. Balzer
LICENSED LANDSCAPE ARCHITECT

June 5, 2009
PLANS APPROVAL DATE

LICENSED LANDSCAPE ARCHITECT Gregory A. Balzer 2576 STATE OF CALIFORNIA
10-01-09 Expiration date
2-28-11 Renewal date
5-14-09 Date

The State of California or its officers or agents shall not be responsible for the accuracy or completeness of electronic copies of this plan sheet.

To accompany plans dated 9-13-10

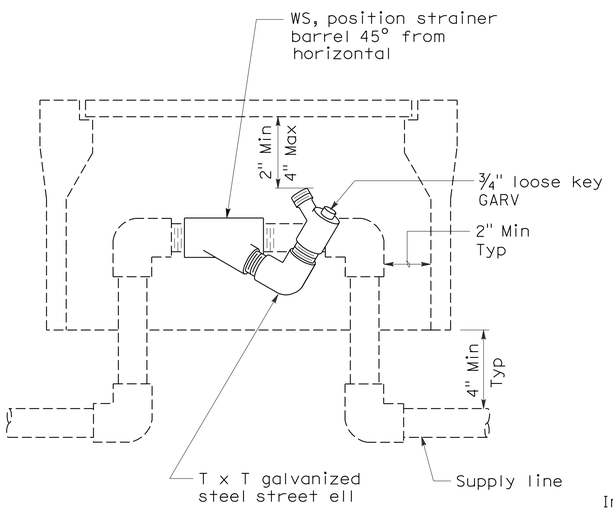

ELEVATION
WYE STRAINER

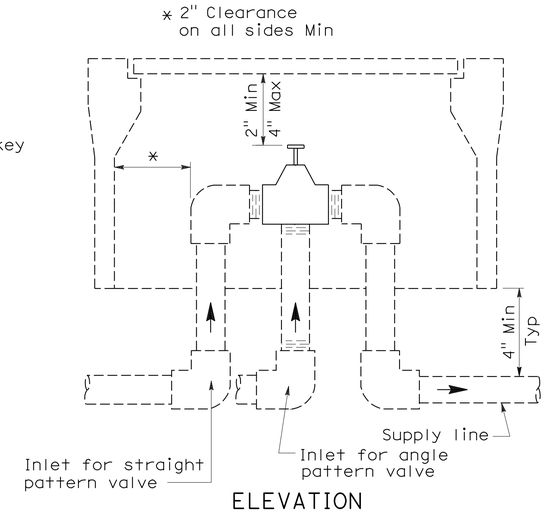

ELEVATION
VALVE

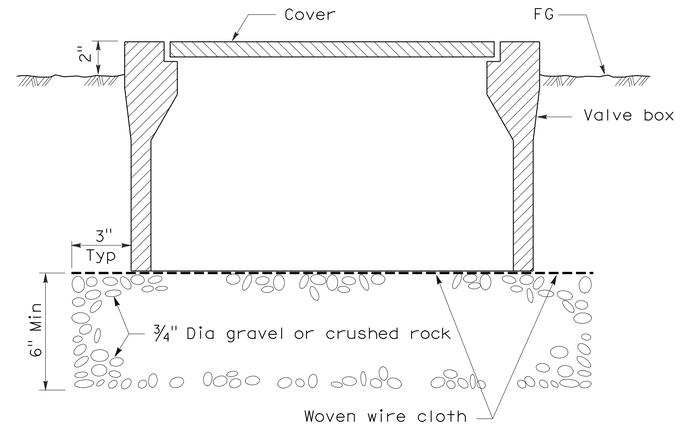

SECTION
VALVE BOX

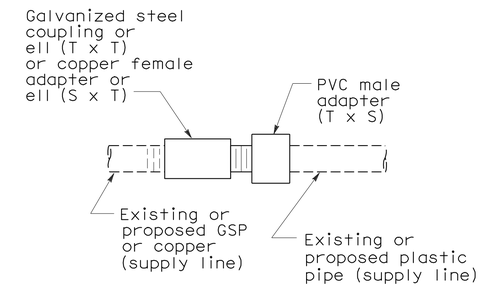

PLAN
GALVANIZED OR COPPER PIPE CONNECTION TO PLASTIC PIPE

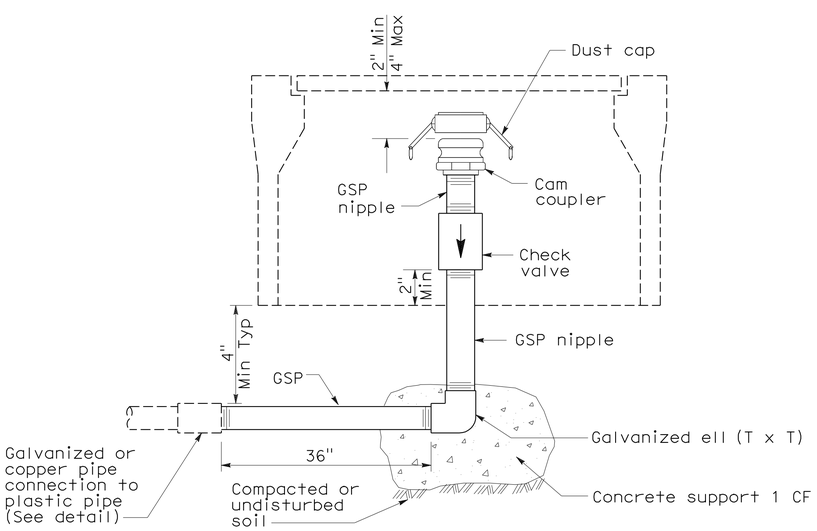

ELEVATION
CAM COUPLER ASSEMBLY

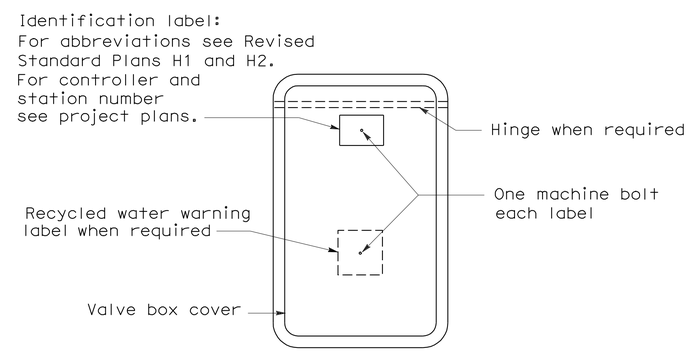

PLAN

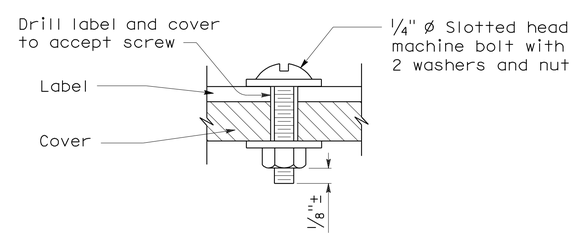

SECTION
VALVE BOX IDENTIFICATION

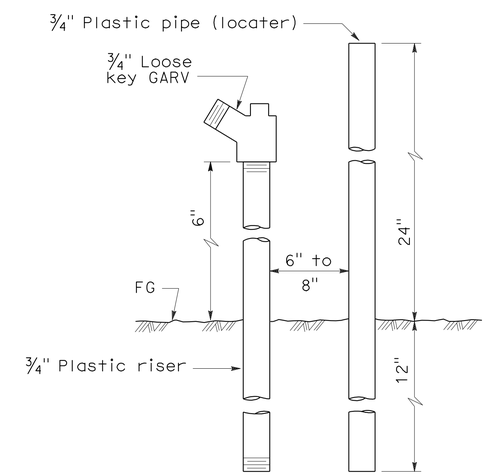

ELEVATION
FLUSH VALVE

STATE OF CALIFORNIA
DEPARTMENT OF TRANSPORTATION

PLANTING AND IRRIGATION DETAILS

NO SCALE

RSP H7 DATED JUNE 5, 2009 SUPERSEDES STANDARD PLAN H7
DATED MAY 1, 2006 - PAGE 207 OF THE STANDARD PLANS BOOK DATED MAY 2006.

REVISED STANDARD PLAN RSP H7

2006 REVISED STANDARD PLAN RSP H7

5-28-09

DIST	COUNTY	ROUTE	POST MILES TOTAL PROJECT	SHEET NO.	TOTAL SHEETS
05	Mon	101	86.6/R87.7	33	43

Randell D. Hiatt
REGISTERED CIVIL ENGINEER

June 6, 2008
PLANS APPROVAL DATE

REGISTERED PROFESSIONAL ENGINEER
Randell D. Hiatt
No. C50200
Exp. 6-30-09
CIVIL
STATE OF CALIFORNIA

The State of California or its officers or agents shall not be responsible for the accuracy or completeness of electronic copies of this plan sheet.

To accompany plans dated 9-13-10

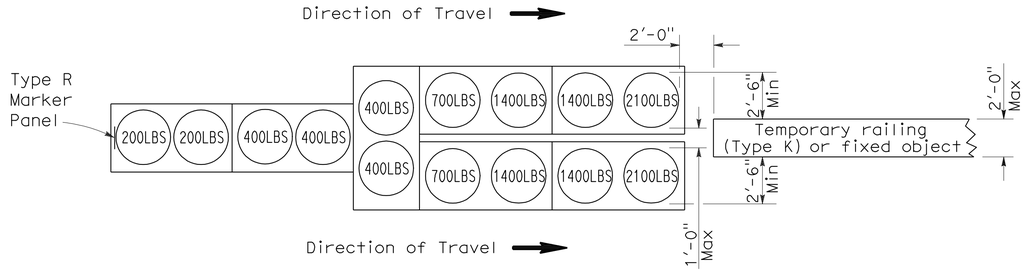

ARRAY 'TU14'

Approach speed 45 mph or more

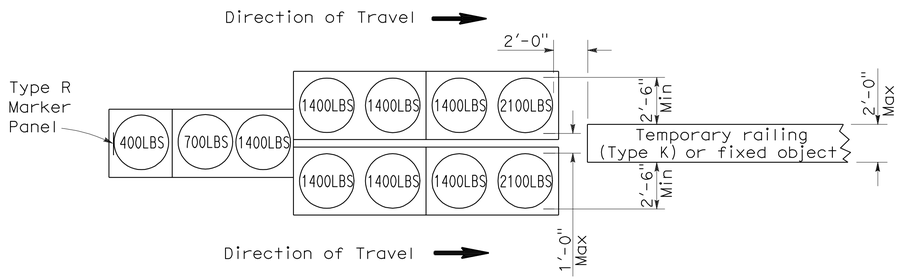

ARRAY 'TU11'

Approach speed less than 45 mph

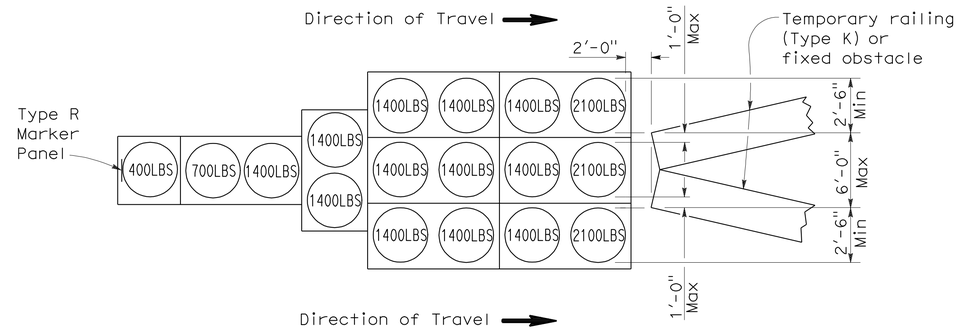

ARRAY 'TU17'

Approach speed less than 45 mph

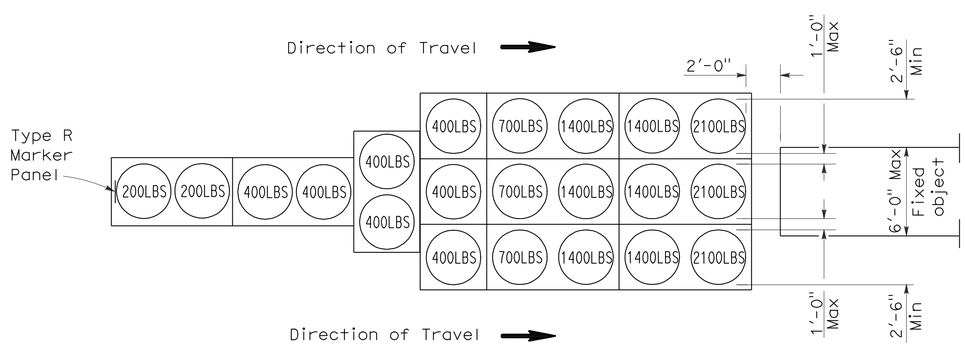

ARRAY 'TU21'

Approach speed 45 mph or more

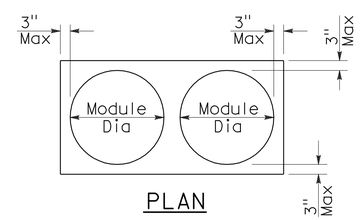

PLAN

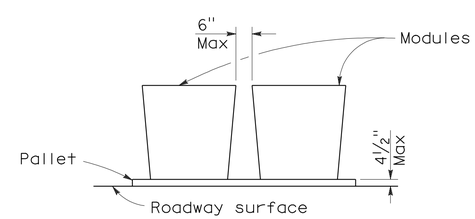

ELEVATION

CRASH CUSHION PALLET DETAIL

See Note 7

NOTES:

1. (XXX) Indicates sand filled module location and weight of sand in pounds for each module. Module spacing is based on the greater diameter of the module.
2. All sand weights are nominal.
3. Temporary crash cushion arrays shall not encroach on the traveled way.
4. Place the top of Type R marker panel 1" below the module lid.
5. Refer to Standard Plan A73B for marker details.
6. Approach speeds indicated conform to NCHRP 350 Report criteria.
7. Use of pallets is optional.

STATE OF CALIFORNIA
DEPARTMENT OF TRANSPORTATION

TEMPORARY CRASH CUSHION, SAND FILLED (UNIDIRECTIONAL)

NO SCALE

RSP T1A DATED JUNE 6, 2008 SUPERSEDES STANDARD PLAN T1A
DATED MAY 1, 2006 - PAGE 211 OF THE STANDARD PLANS BOOK DATED MAY 2006.

REVISED STANDARD PLAN RSP T1A

2006 REVISED STANDARD PLAN RSP T1A

DIST	COUNTY	ROUTE	POST MILES TOTAL PROJECT	SHEET NO.	TOTAL SHEETS
05	Mon	101	86.6/R87.7	34	43

Randell D. Hiatt
REGISTERED CIVIL ENGINEER

June 6, 2008
PLANS APPROVAL DATE

REGISTERED PROFESSIONAL ENGINEER
Randell D. Hiatt
No. C50200
Exp. 6-30-09
CIVIL
STATE OF CALIFORNIA

The State of California or its officers or agents shall not be responsible for the accuracy or completeness of electronic copies of this plan sheet.

To accompany plans dated 9-13-10

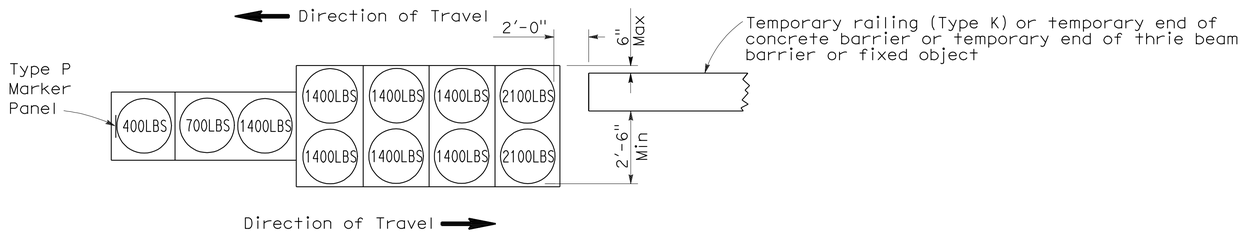

ARRAY 'TB11'

Approach speed less than 45 mph

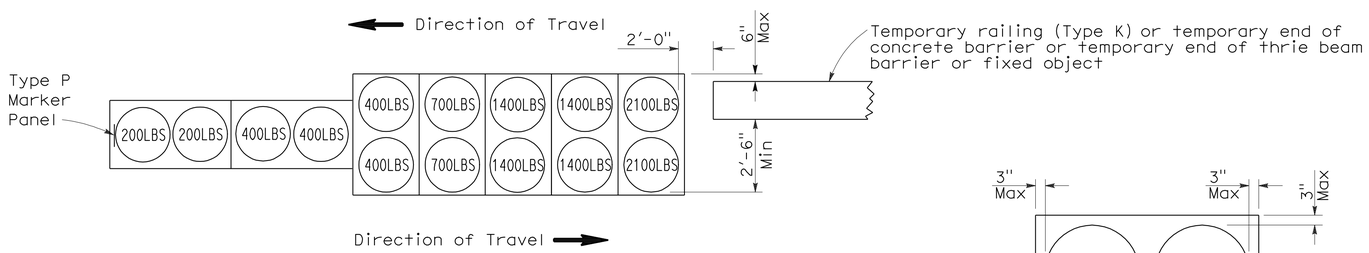

ARRAY 'TB14'

Approach speed 45 mph or more

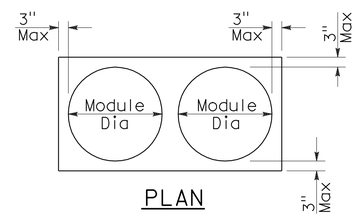

PLAN

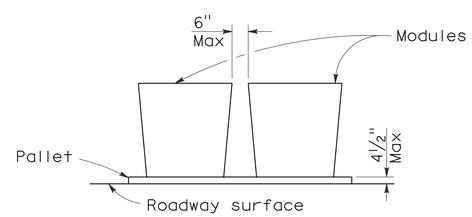

ELEVATION

CRASH CUSHION PALLET DETAIL

See Note 7

NOTES:

1. (XXX) Indicates sand filled module location and weight of sand in pounds for each module. Module spacing is based on the greater diameter of the module.
2. All sand weights are nominal.
3. Temporary crash cushion arrays shall not encroach on the traveled way.
4. Place the Type P marker panel so that the bottom of the panel rests upon the pallet.
5. Refer to Standard Plan A73B for marker details.
6. Approach speeds indicated conform to NCHRP 350 Report criteria.
7. Use of pallets is optional.

STATE OF CALIFORNIA
DEPARTMENT OF TRANSPORTATION

TEMPORARY CRASH CUSHION, SAND FILLED (BIDIRECTIONAL)

NO SCALE

RSP T1B DATED JUNE 6, 2008 SUPERSEDES STANDARD PLAN T1B
DATED MAY 1, 2006 - PAGE 212 OF THE STANDARD PLANS BOOK DATED MAY 2006.

REVISED STANDARD PLAN RSP T1B

2006 REVISED STANDARD PLAN RSP T1B

5-15-08

DIST	COUNTY	ROUTE	POST MILES TOTAL PROJECT	SHEET NO.	TOTAL SHEETS
05	Mon	101	86.6/R87.7	35	43

Randell D. Hiatt
REGISTERED CIVIL ENGINEER

June 6, 2008
PLANS APPROVAL DATE

REGISTERED PROFESSIONAL ENGINEER
Randell D. Hiatt
No. C50200
Exp. 6-30-09
CIVIL
STATE OF CALIFORNIA

The State of California or its officers or agents shall not be responsible for the accuracy or completeness of electronic copies of this plan sheet.

To accompany plans dated 9-13-10

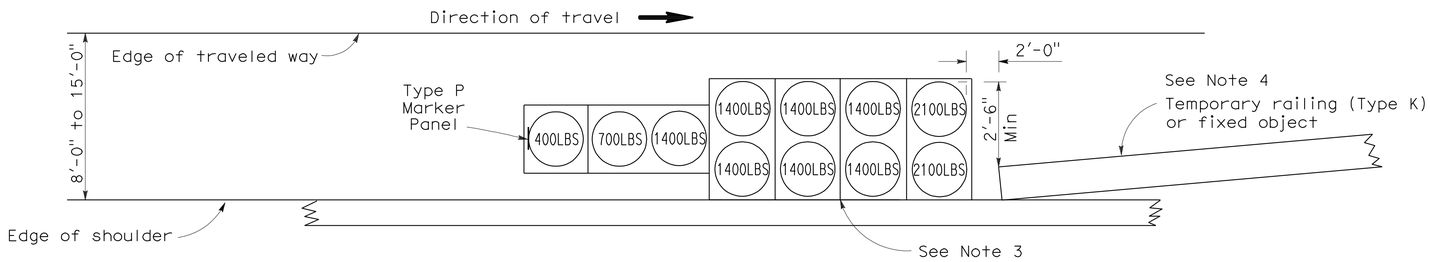

ARRAY 'TS11'

Approach speed less than 45 mph
See Note 9

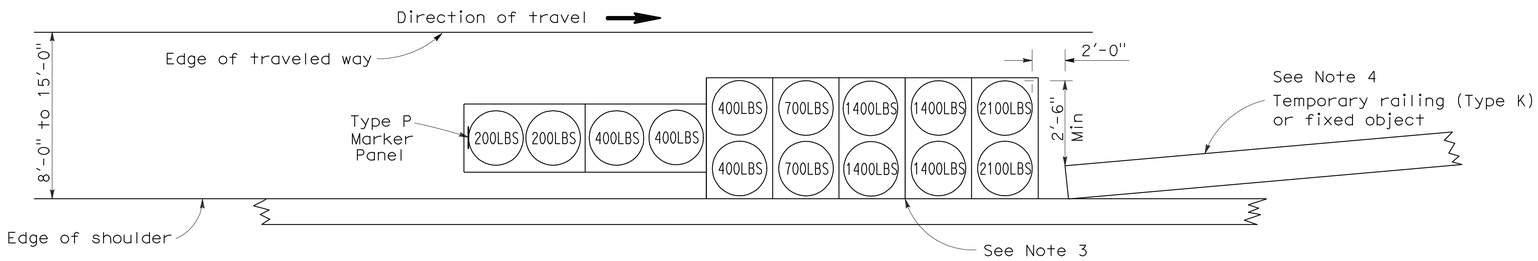

ARRAY 'TS14'

Approach speed 45 mph or more
See Note 9

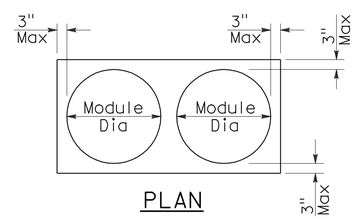

PLAN

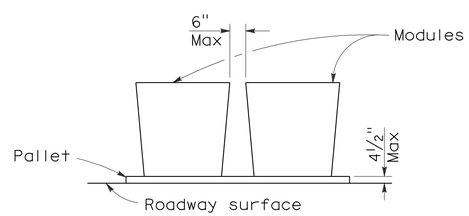

ELEVATION

CRASH CUSHION PALLET DETAIL

See Note 11

NOTES:

1. (XXX) Indicates sand filled module location and weight of sand in pounds for each module. Module spacing is based on the greater diameter of the module.
2. All sand weights are nominal.
3. The temporary crash cushion arrays shown on this plan shall be used only in locations where there will be traffic on one side of the temporary crash cushion array.
4. If the fixed object or approach end of the temporary railing is less than 15'-0" from the edge of traveled way, a temporary crash cushion is required in a construction or work zone.
5. Temporary crash cushion arrays shall not encroach on the traveled way.
6. Arrays for median shoulders shall conform to details shown on this plan for outside shoulders.
7. Place the Type P marker panel so that the bottom of the panel rests upon the pallet and faces traffic.
8. Refer to Standard Plan A73B for marker details.
9. For shoulder widths less than 8'-0", appropriate approved crash cushion protection, other than sand filled modules, shall be provided at fixed objects and at approach ends of temporary railing. The specific type of crash cushion shall be as shown on the project plans or as specified in the Special Provisions, or if not shown on the project plans or specified in the Special Provisions, shall be as approved by the Engineer.
10. Approach speeds indicated conform to NCHRP 350 Report criteria.
11. Use of pallets is optional.

STATE OF CALIFORNIA
DEPARTMENT OF TRANSPORTATION

TEMPORARY CRASH CUSHION, SAND FILLED (SHOULDER INSTALLATIONS)

NO SCALE

RSP T2 DATED JUNE 6, 2008 SUPERSEDES STANDARD PLAN T2
DATED MAY 1, 2006 - PAGE 213 OF THE STANDARD PLANS BOOK DATED MAY 2006.

REVISED STANDARD PLAN RSP T2

2006 REVISED STANDARD PLAN RSP T2

DIST	COUNTY	ROUTE	POST MILES TOTAL PROJECT	SHEET NO.	TOTAL SHEETS
05	Mon	101	86.6/R87.7	36	43

REGISTERED CIVIL ENGINEER

November 17, 2006
PLANS APPROVAL DATE

REGISTERED PROFESSIONAL ENGINEER
Greg W. Edwards
No. C36386
Exp. 6-30-08
CIVIL
STATE OF CALIFORNIA

The State of California or its officers or agents shall not be responsible for the accuracy or completeness of electronic copies of this plan sheet.

To accompany plans dated 9-13-10

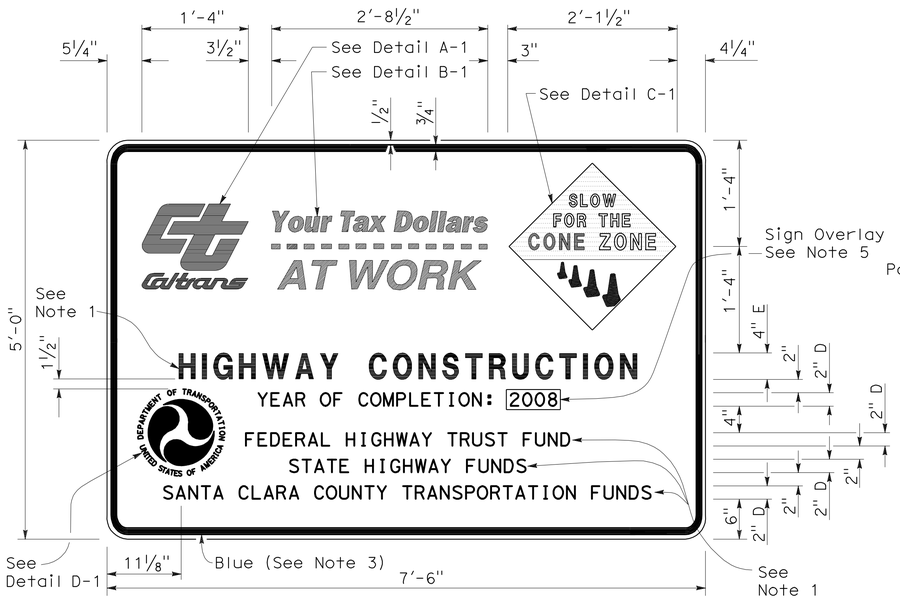

TYPE 1

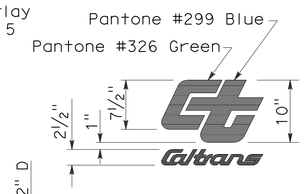

DETAIL A-1

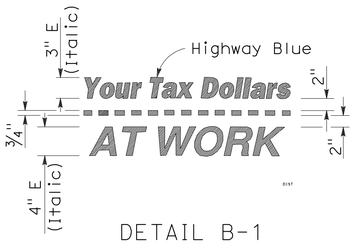

DETAIL B-1
(See Note 3)

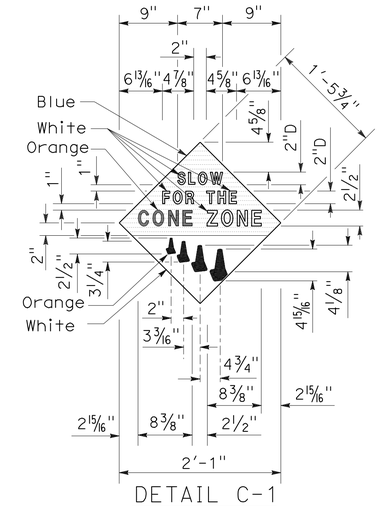

DETAIL C-1
(See Note 4)

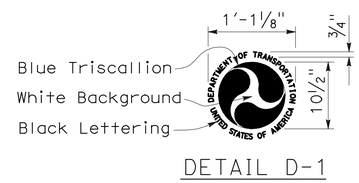

DETAIL D-1
(See Note 6)

NOTES:

1. The sign messages shown for type of project and fund types are examples only. See the Special Provisions for the applicable type of project and fund type messages to be used.
2. Except as otherwise shown, the legend of sign shall be black on a white background (non-reflective).
3. The border of the signs and details "B-1" and "B-2" shall be blue (non-reflective).
4. The diamond in details "C-1" and "C-2" shall be blue for the background of message, " SLOW FOR THE CONE ZONE", and white background for the orange cones. The color and type of font for the "SLOW FOR THE CONE ZONE" message shall be: "SLOW" white D; "FOR THE" white D; "CONE" orange Arial font; "ZONE" white Arial font.
5. Year of completion of project construction shown on the overlay is an example only. See the Special Provisions.
6. Use when the Project involves Federal Highway Trust Fund.

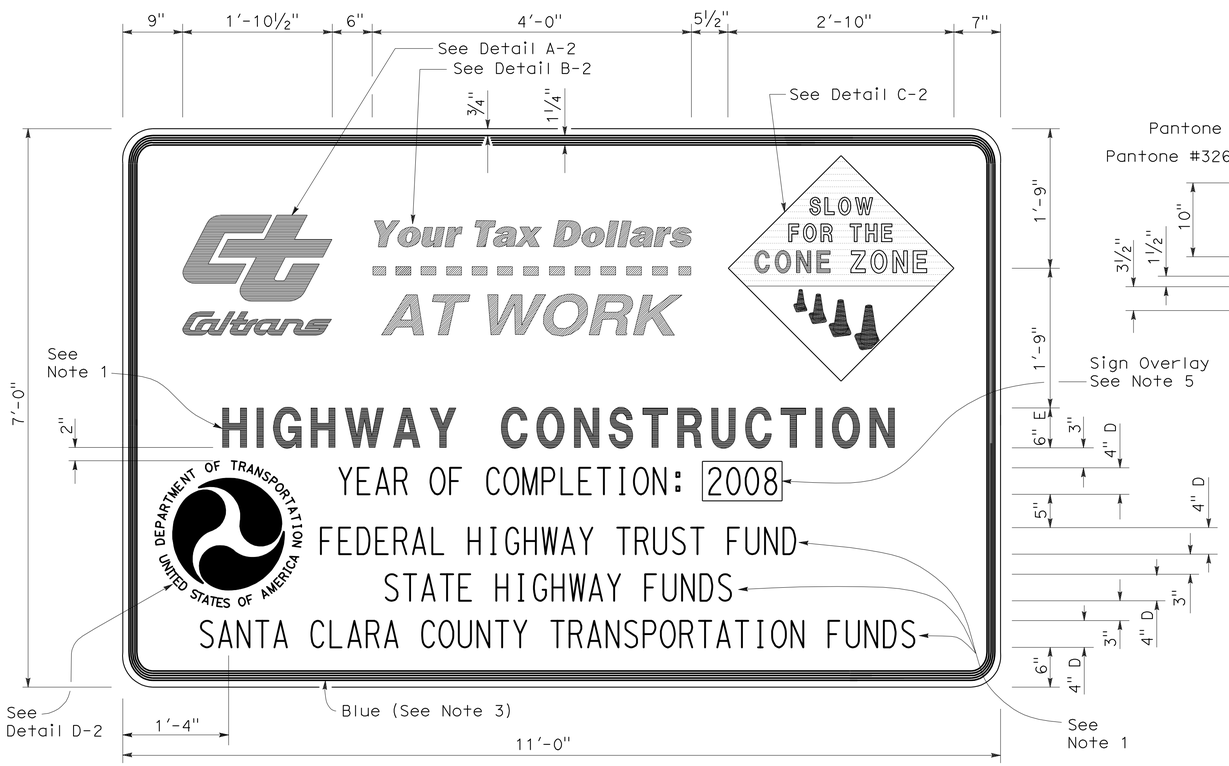

TYPE 2

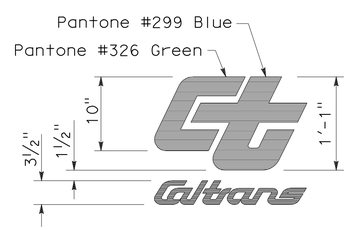

DETAIL A-2

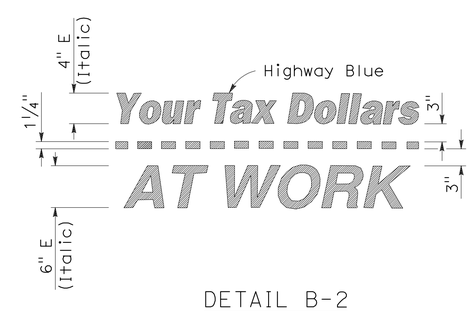

DETAIL B-2
(See Note 3)

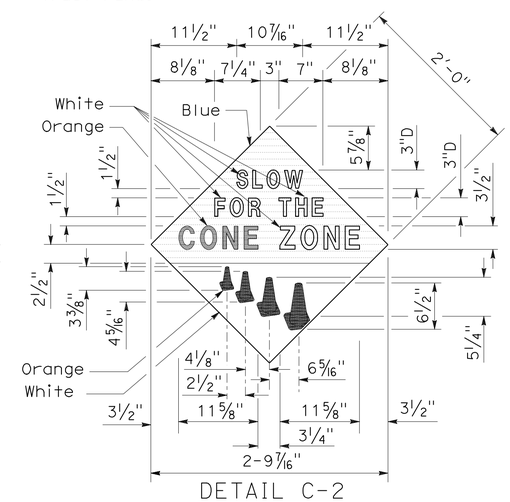

DETAIL C-2
(See Note 4)

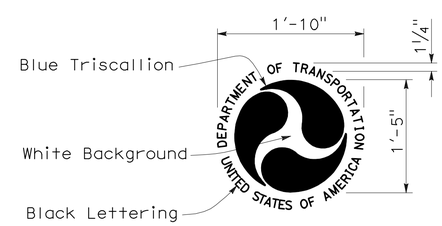

DETAIL D-2
(See Note 6)

STATE OF CALIFORNIA
DEPARTMENT OF TRANSPORTATION

CONSTRUCTION PROJECT FUNDING IDENTIFICATION SIGNS

NO SCALE

RSP T7 DATED NOVEMBER 17, 2006 SUPERSEDES STANDARD PLAN T7
DATED MAY 1, 2006 - PAGE 217 OF THE STANDARD PLANS BOOK DATED MAY 2006.

REVISED STANDARD PLAN RSP T7

2006 REVISED STANDARD PLAN RSP T7

9-7-06

DIST	COUNTY	ROUTE	POST MILES TOTAL PROJECT	SHEET NO.	TOTAL SHEETS
05	Mon	101	86.6/R87.7	37	43

Robert B Schott
LICENSED LANDSCAPE ARCHITECT

April 3, 2009
PLANS APPROVAL DATE

LICENSED LANDSCAPE ARCHITECT — Robert B. Schott 3025 — Signature — 11-30-10 Renewal Date — 2-25-09 Date — STATE OF CALIFORNIA

The State of California or its officers or agents shall not be responsible for the accuracy or completeness of electronic copies of this plan sheet.

To accompany plans dated 9-13-10

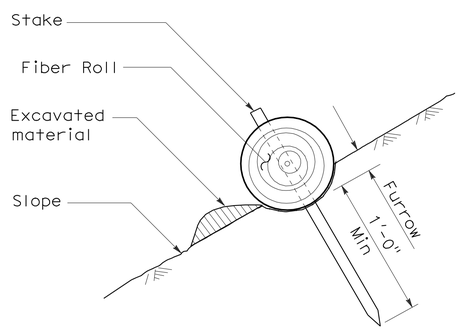

SECTION

TEMPORARY FIBER ROLL (TYPE 1)

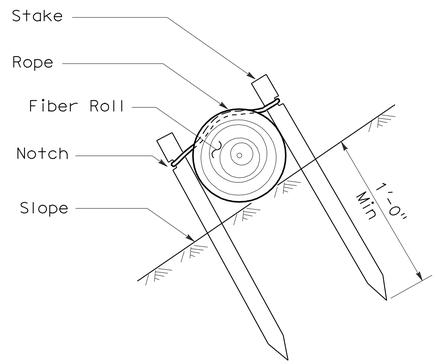

SECTION

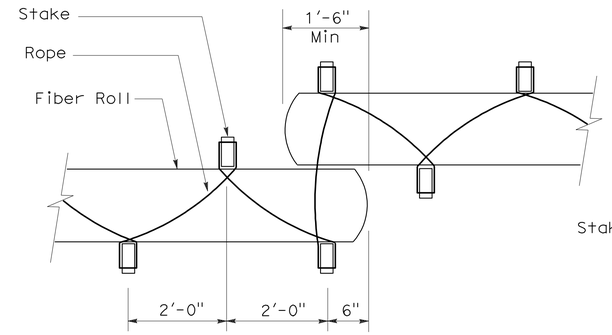

PLAN

TEMPORARY FIBER ROLL (TYPE 2)

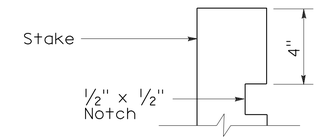

ELEVATION

STAKE NOTCH DETAIL

NOTES:

1. Temporary fiber roll spacing varies depending upon slope inclination.
2. Installations shown in the perspectives are for slope inclination of 10:1 and steeper.

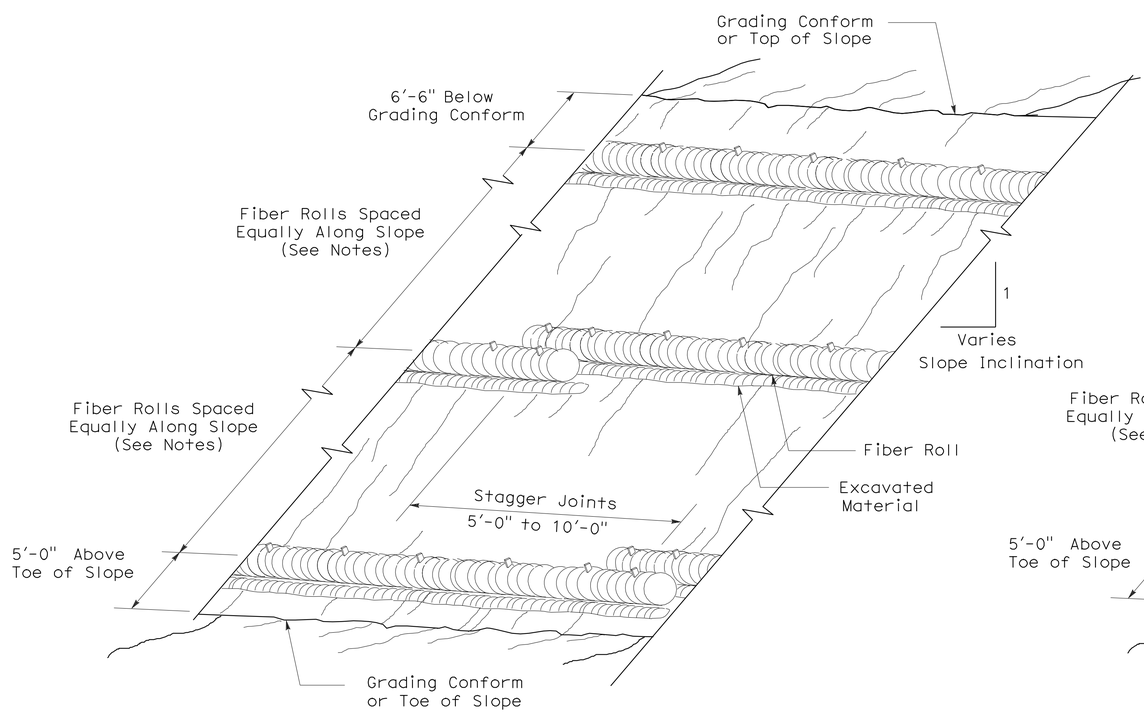

PERSPECTIVE

TEMPORARY FIBER ROLL (TYPE 1)

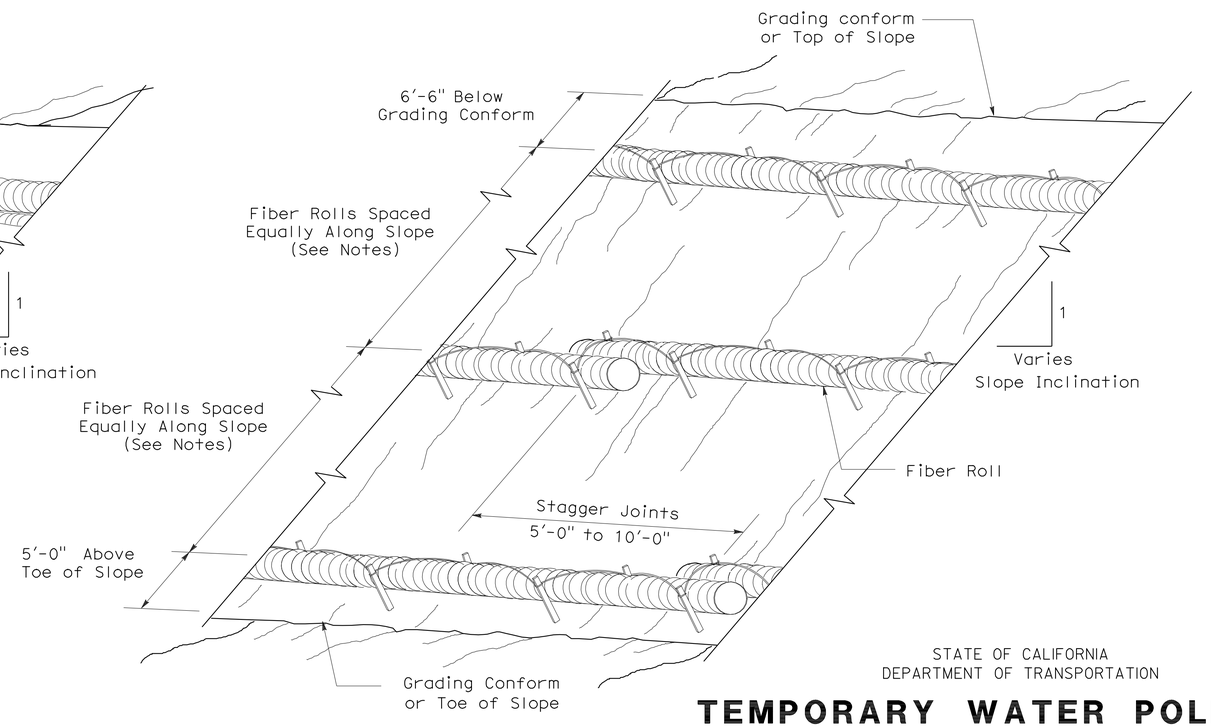

PERSPECTIVE

TEMPORARY FIBER ROLL (TYPE 2)

STATE OF CALIFORNIA
DEPARTMENT OF TRANSPORTATION

TEMPORARY WATER POLLUTION CONTROL DETAILS (TEMPORARY FIBER ROLL)

NO SCALE

RSP T56 DATED APRIL 3, 2009 SUPERSEDES STANDARD PLAN T56
DATED MAY 1, 2006 - PAGE 232 OF THE STANDARD PLANS BOOK DATED MAY 2006.

REVISED STANDARD PLAN RSP T56

2006 REVISED STANDARD PLAN RSP T56

2-23-09

DIST	COUNTY	ROUTE	POST MILES TOTAL PROJECT	SHEET NO.	TOTAL SHEETS
05	Mon	101	86.6/R87.7	38	43

Robert B Schott
LICENSED LANDSCAPE ARCHITECT

August 15, 2008
PLANS Approval DATE

LICENSED LANDSCAPE ARCHITECT Robert B. Schott 3625 Signature 11-04-08 Renewal Date 08-11-08 Date STATE OF CALIFORNIA

The State of California or its officers or agents shall not be responsible for the accuracy or completeness of electronic copies of this plan sheet.

To accompany plans dated 9-13-10

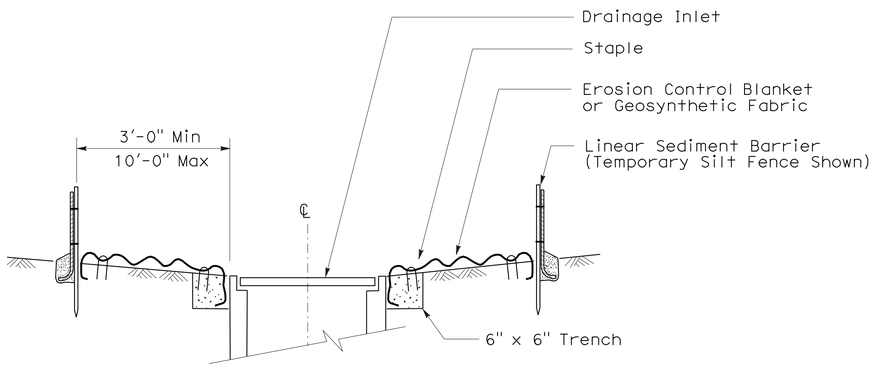

SECTION A-A

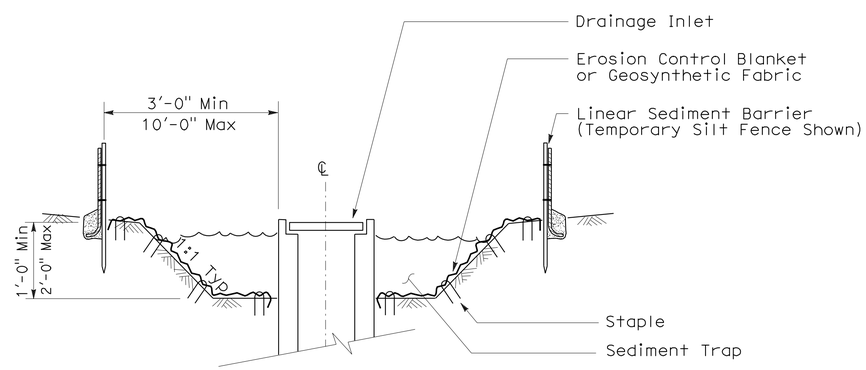

SECTION B-B

NOTES:

1. See Standard Plan T51 for Temporary Silt Fence.
2. Dimensions may vary to fit field conditions.

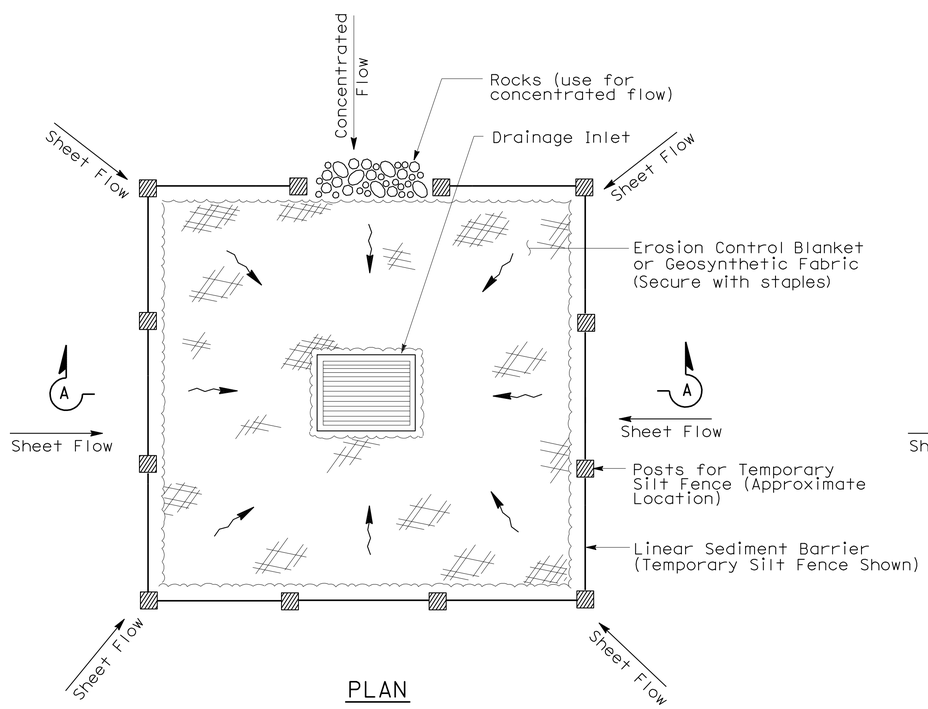

PLAN

TEMPORARY DRAINAGE INLET PROTECTION (TYPE 1)

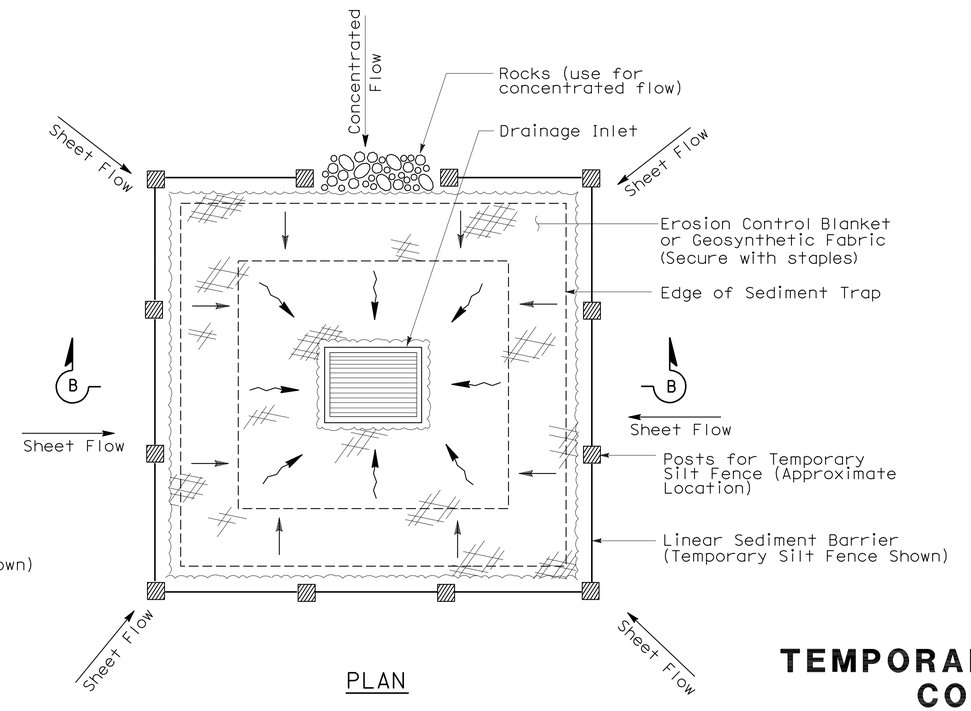

PLAN

TEMPORARY DRAINAGE INLET PROTECTION (TYPE 2) (EXCAVATED SEDIMENT TRAP)

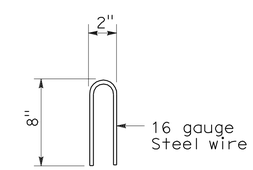

STAPLE DETAIL

STATE OF CALIFORNIA
DEPARTMENT OF TRANSPORTATION

TEMPORARY WATER POLLUTION CONTROL DETAILS (TEMPORARY DRAINAGE INLET PROTECTION)

NO SCALE

NSP T61 DATED AUGUST 15, 2008 SUPPLEMENTS THE STANDARD PLANS BOOK DATED MAY 2006.

NEW STANDARD PLAN NSP T61

2006 NEW STANDARD PLAN NSP T61

7-11-08

DIST	COUNTY	ROUTE	POST MILES TOTAL PROJECT	SHEET NO.	TOTAL SHEETS
05	Mon	101	86.6/R87.7	39	43

REGISTERED ELECTRICAL ENGINEER

October 5, 2007
PLANS APPROVAL DATE

REGISTERED PROFESSIONAL ENGINEER Jeffery G. McRae No. E14512 Exp. 6-30-08 ELECTRICAL STATE OF CALIFORNIA

The State of California or its officers or agents shall not be responsible for the accuracy or completeness of electronic copies of this plan sheet.

To accompany plans dated 9-13-10

2006 REVISED STANDARD PLAN RSP ES-1A

ELECTROLIERS

STANDARD TYPES
15, 15D
15 STRUCTURE
21, 21D STRUCTURE
30
31
32
35
36-20A

High mast light pole

Double Arm lighting standard

Existing electrolier

Electrolier foundation (Future installation)

NOTES:

1. Luminaires shall be 310 W HPS when installed on Type 21, 21D, 30, 31, 32, 35 and 36-20A Standards, unless otherwise specified. Luminaires shall be 200 W HPS when installed on other type standards or poles, unless otherwise specified.
2. Luminaires shall be the cutoff type, ANSI Type III medium cutoff lighting distribution, unless otherwise specified.
3. Variations noted adjacent to symbol on project plans.

Electrolier (see project notes or project plans)

Luminaire on wood pole

STANDARD NOTES:

- AB — Abandon. If applied to conduit, remove conductors.
- BC — Install pull box in existing conduit run.
- BP — Pedestrian barricade, type as indicated on plan.
- CB — Install conduit into existing pull box.
- CC — Connect new and existing conduit. Remove existing conductors and install conductors as indicated.
- CF — Conduit to remain for future use. Remove conductors. Install pull wire or rope.
- DH — Detector handhole.
- FA — Foundation to be abandoned.
- IS — Install sign on signal mast arm.
- NS — No slip base on standard.
- PEC — Photoelectric control.
- PEU — Photoelectric unit.
- RC — Equipment or material to be removed and become the property of the Contractor.
- RE — Remove electrolier, fuses and ballast. Tape ends of conductors.
- RL — Relocate equipment.
- RR — Remove and reuse equipment.
- RS — Remove and salvage equipment.
- SC — Splice new to existing conductors.
- SD — Service disconnect.
- SF — Standard to remain for future use. Remove luminaire, pole conductors, fuses and ballast.
- TSP — Telephone service point.

ABBREVIATIONS AND EQUIPMENT DESIGNATIONS

PROPOSED	EXISTING	
BBS	bbs	Battery backup system
BC	bc	Bolt circle
C	C	Conduit
CCTV	cctv	Closed circuit television
CKT	ckt	Circuit
CMS	cms	Changeable message sign
DLC	dlc	Loop detector lead-in cable
EMS	ems	Extinguishable message sign
EVC	evc	Emergency vehicle cable
EVD	evd	Emergency vehicle detector
FB	fb	Flashing beacon
FBCA	fbca	Flashing beacon control assembly
FBS	fbs	Flashing beacon with slip base
FO	fo	Fiber optic
G	G	Ground (Equipment Grounding Conductor)
GFCI	GFCI	Ground fault circuit interrupt
HAR	har	Highway advisory radio
HEX	hex	Hexagonal
HPS	hps	High pressure sodium
IISNS	iisns	Internally illuminated street name sign
ISL	isl	Induction sign lighting
LED	led	Light emitting diode
LMA	lma	Luminaire mast arm
LPS	lps	Low pressure sodium
LTG	ltg	Lighting
LUM	lum	Luminaire
MAT	mat	Mast arm mounting vehicle signal faces, top attachment
MAS	mas	Mast arm mounting vehicle signal faces, side attachment
MAS-4A	mas-4A	Mast arm mounting vehicle signal faces, side attachment - 4 signal section
MAS-4B	mas-4B	
MAS-4C	mas-4C	
MAS-5A	mas-5A	Mast arm mounting vehicle signal faces, side attachment - 5 signal section
MAS-5B	mas-5B	
MC	mc	Mercury contactor
M/M	m/m	Multiple to multiple transformer
MT	mt	Conduit with pull wire or rope only
MTG	mtg	Mounting
	mv	Mercury vapor lighting fixture
N	N	Neutral (Grounded Conductor)
NC	NC	Normally closed
NO	NO	Normally open
PB	pb	Pull box
PEC	pec	Photoelectric control (Type I, II, III, IV or V as shown)
PED	ped	Pedestrian
PEU	peu	Photoelectric unit
PPB	ppb	Pedestrian push button
RL		Relocated equipment
RM	rm	Ramp metering
SB	sb	Slip base
SIC	sic	Signal interconnect cable
SIG	sig	Signal
SMA	sma	Signal mast arm
SNS	sns	Street name sign
SP	sp	Service point
TDC	tdc	Telephone demarcation cabinet
TMS	tms	Traffic monitoring station
TOS	tos	Traffic Operations System
VEH	veh	Vehicle
XFMR	xfmr	Transformer
COMM	comm	Communication
RWIS	rwis	Roadway weather information system

SOFFIT AND WALL MOUNTED LUMINAIRES

Pendant, 70 W HPS unless otherwise specified.

Flush, 70 W HPS unless otherwise specified.

Wall surface, 70 W HPS unless otherwise specified.

Existing soffit or wall luminaire to remain unmodified.

Existing soffit or wall luminaire to be modified as specified.

NOTE:

Arrow indicates "street side" of luminaire.

STATE OF CALIFORNIA
DEPARTMENT OF TRANSPORTATION

ELECTRICAL SYSTEMS (SYMBOLS AND ABBREVIATIONS)

NO SCALE

RSP ES-1A DATED OCTOBER 5, 2007 SUPERSEDES STANDARD PLAN ES-1A DATED MAY 1, 2006 - PAGE 400 OF THE STANDARD PLANS BOOK DATED MAY 2006.

REVISED STANDARD PLAN RSP ES-1A

DIST	COUNTY	ROUTE	POST MILES TOTAL PROJECT	SHEET NO.	TOTAL SHEETS
05	Mon	101	86.6/R87.7	40	43

REGISTERED ELECTRICAL ENGINEER

October 5, 2007
PLANS APPROVAL DATE

REGISTERED PROFESSIONAL ENGINEER Jeffery G. McRae No. E14512 Exp. 6-30-08 ELECTRICAL STATE OF CALIFORNIA

The State of California or its officers or agents shall not be responsible for the accuracy or completeness of electronic copies of this plan sheet.

To accompany plans dated 9-13-10

CONDUIT

PROPOSED	EXISTING	
		Lighting Conduit, unless otherwise indicated or noted
		Traffic signal conduit
C	c	Communication conduit
T	t	Telephone conduit
F	f	Fire alarm conduit
FO	fo	Fiber optic conduit
		Conduit termination (RSP ES-9A C)
R	r	Conduit riser in/on structure or service pole

SERVICE EQUIPMENT

PROPOSED	EXISTING	
OH	oh	Overhead lines
U	U	Wood pole "U" indicates utility owned
		Pole guy with anchor
		Utility transformer - ground mounted
III		Service equipment enclosure type
		Service equipment enclosure door indicates front of enclosure
T	t	Telephone demarcation cabinet

POLE-MOUNTED SERVICE DESIGNATION

Type of installation

TYPE H SERVICE - 28'-10" ← Pole height above grade

ILLUMINATED OVERHEAD SIGN

PROPOSED	EXISTING	
		Overhead sign - Single post
		Overhead sign - Two post
		Overhead sign - Mounted on structure
		Overhead sign with electrolier

SIGNAL EQUIPMENT

PROPOSED	EXISTING	
		Pedestrian signal face
		Pedestrian push button post
		Pedestrian barricade
		Vehicle signal face (with backplate, 3-Section: red, yellow and green)
		Vehicle signal face with angle visors
PV	PV	Modifications of basic symbols: "L" indicates all non-arrow sections louvered "LG" indicates louvered green section only "PV" indicates 12" programmed visibility sections "8" indicates all 8" sections (only when specified)
		Type 15TS and Vehicle signal face
		Vehicle signal face with red, yellow and green left arrow sections
		Vehicle signal face with red and yellow sections and up green arrow
		Vehicle signal face (5 Section) with red, yellow and green sections and yellow and green right arrows
		Type 1 Standard and attached vehicle signal faces
		Standard with signal mast arm only and attached vehicle signal faces and internally illuminated street name sign
		Type 33 Standard, Left-turn vehicle signal face and sign
		Standard with luminaire and signal mast arms and attached vehicle signal faces
		Cantilever flashing beacon Type 9 Frame, with a sign unless otherwise specified or indicated
		Type 15-FBS Standard with two vehicle signal face sections with lens, backplate and visor with a sign
R	Y	Flashing beacon. One vehicle signal face section with lens, backplate and visor. "R" indicates red indication, "Y" indicates yellow indication
		Controller assembly. Door indicates front of cabinet

SIGNAL EQUIPMENT Cont

PROPOSED	EXISTING	
		Guard post
		Type 1 Standard with "Meter On" sign
		Emergency Vehicle detector

NOTES:

1. All signal sections shall be 12" unless shown otherwise.
2. Signal heads shall be provided with backplates unless shown otherwise.
3. Signal indication shall be LED.

STATE OF CALIFORNIA
DEPARTMENT OF TRANSPORTATION

ELECTRICAL SYSTEMS (SYMBOLS AND ABBREVIATIONS)

NO SCALE

RSP ES-1B DATED OCTOBER 5, 2007 SUPERCEDES STANDARD PLAN ES-1B DATED MAY 1, 2006 - PAGE 401 OF THE STANDARD PLANS BOOK DATED MAY 2006.

REVISED STANDARD PLAN RSP ES-1B

2006 REVISED STANDARD PLAN RSP ES-1B

DIST	COUNTY	ROUTE	POST MILES TOTAL PROJECT	SHEET NO.	TOTAL SHEETS
05	Mon	101	86.6/R87.7	41	43

REGISTERED ELECTRICAL ENGINEER

October 5, 2007
PLANS APPROVAL DATE

REGISTERED PROFESSIONAL ENGINEER Jeffery G. McRae No. E14512 Exp. 6-30-08 ELECTRICAL STATE OF CALIFORNIA

The State of California or its officers or agents shall not be responsible for the accuracy or completeness of electronic copies of this plan sheet.

To accompany plans dated 9-13-10

EQUIPMENT IDENTIFICATION

ILLUMINATED SIGN IDENTIFICATION NUMBER:

Sign No. 12345

10 ISL SCI 1.0

- Sign number - Place on post or structure
- Transformer rating (kVA)
- Lighting control type
- Number and type of fixtures

Do NOT place on standard or structure

ELECTROLIER OR EQUIPMENT IDENTIFICATION NUMBER:

12345 - 15'-0"

- Mast arm length, if shown. Do not place on standard or structure.
- Equipment number - Place on standard or structure. Existing equipment numbers are shown in parenthesis

CONDUIT AND CONDUCTOR IDENTIFICATION:

1½"C, 2#10, 15#14, 2 DLC

- Number and size of conductors and cables
- Size of conduit in inches

Ø1, Ø2, Ø2P, etc.	Traffic phase identification for signal faces, detectors and phase diagrams
1 2 3	Project note numbers
A B C	Equipment description, installation or item numbers
1 2 3	Conduit run numbers

SIGNAL AND LIGHTING STANDARD (TYPICAL DESIGNATION):

19A - 3 - 100

- Wind velocity = 100 mph
- Case 3 arm loading
- Standard type
- Standard Plan sheet number
- Detail number or letter

MISCELLANEOUS EQUIPMENT

PROPOSED	EXISTING	
CMS	cms	Changeable message sign
		Closed circuit television camera
		Highway advisory radio pole and antenna
EMS	ems	Extinguishable message sign
M V	m v	Detection device M = Microwave sensor V = Video image sensor

WIRING DIAGRAM LEGEND

P	Pole
CB	Circuit breaker
A	Ampere
V	Volt
M	Metered
UM	Unmetered
NB	Neutral bus
GB	Ground bus
G	Equipment grounding conductor
N	Grounded conductor (Neutral)

- External conductor
- Conductor or bus
- Tie point
- Contactor coil
- Contactor, Contact NO
- Terminal blocks
- Contactor, Contact NC
- Enclosure bond
- Grounding electrode
- Circuit breaker
- Receptacle

PULL BOXES

PROPOSED EXISTING

Pull box-No. 5 unless otherwise indicated or noted.

3 9A(21)

Pull box-Additional designations or descriptions

3	= No. 3½ pull box
5	= No. 5 pull box
6	= No. 6 pull box
7	= No. 7 (Ceiling pull box)
8	= No. 8 (Pendant soffit pull box)
9	= No. 9 pull box
9A	= No. 9A pull box

(C)	= Communications pull box
(E)	= Pull box with extension
(S)	= Sprinkler control pull box
(21)	= Anchor bolts and conduit for future installation of Type 21 Standard
(T)	= Traffic pull box

VEHICLE DETECTORS

5 J 9 U

- Vehicle detector designation
- U = Upper
  L = Lower
- Slot number in input file
- Input file (I or J)
- Phase

PROPOSED EXISTING

	Type A detector loop. Outline of sawcut shown.
	Type B detector loop. Outline of sawcut shown.
	Type C detector loop. Outline of sawcut shown.
	Type D detector loop. Outline of sawcut shown.
	Type E detector loop. Outline of sawcut shown.
	Type Q detector loop. Outline of sawcut shown.
	Magnetic detector
DH dh	Detector handhole
	Microwave or video detection zone

STATE OF CALIFORNIA
DEPARTMENT OF TRANSPORTATION

ELECTRICAL SYSTEMS (SYMBOLS AND ABBREVIATIONS)

NO SCALE

RSP ES-1C DATED OCTOBER 5, 2007 SUPERCEDES STANDARD PLAN ES-1C DATED MAY 1, 2006 - PAGE 402 OF THE STANDARD PLANS BOOK DATED MAY 2006.

REVISED STANDARD PLAN RSP ES-1C

2006 REVISED STANDARD PLAN RSP ES-1C

7-10-07

DIST	COUNTY	ROUTE	POST MILES TOTAL PROJECT	SHEET NO.	TOTAL SHEETS
05	Mon	101	86.6/R87.7	42	43

REGISTERED ELECTRICAL ENGINEER

October 5, 2007
PLANS APPROVAL DATE

REGISTERED PROFESSIONAL ENGINEER Jeffery G. McRae No. E14512 Exp. 6-30-08 ELECTRICAL STATE OF CALIFORNIA

The State of California or its officers or agents shall not be responsible for the accuracy or completeness of electronic copies of this plan sheet.

To accompany plans dated 9-13-10

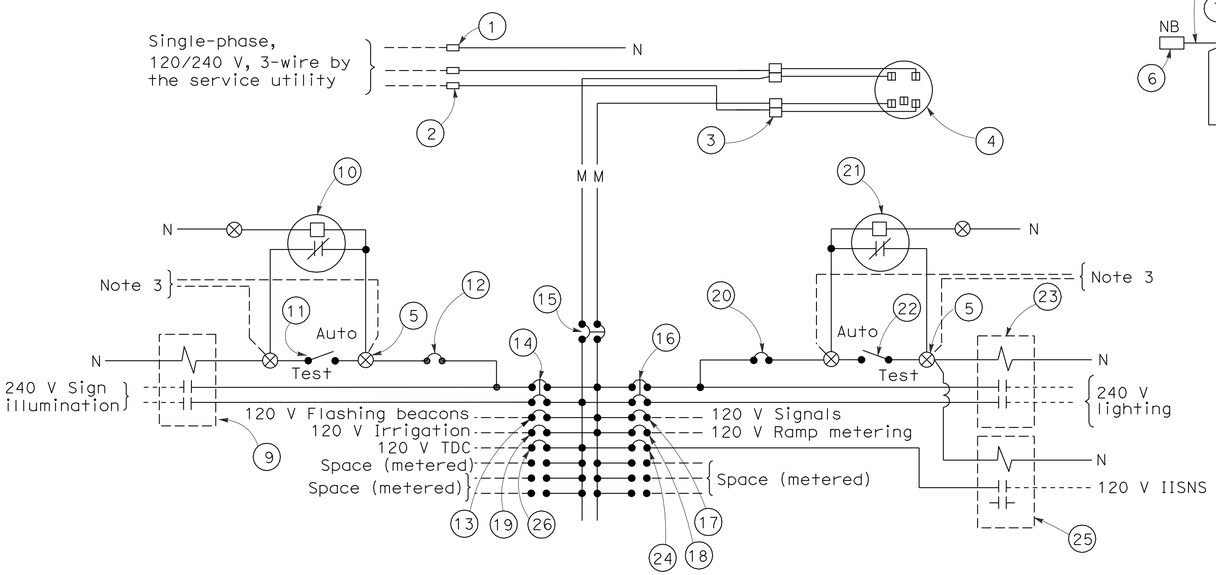

120/240 V SERVICE WIRING DIAGRAM (TYPICAL)

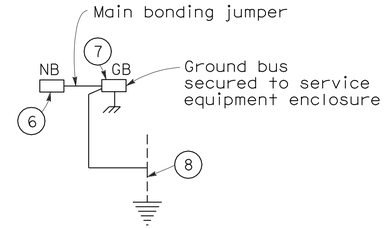

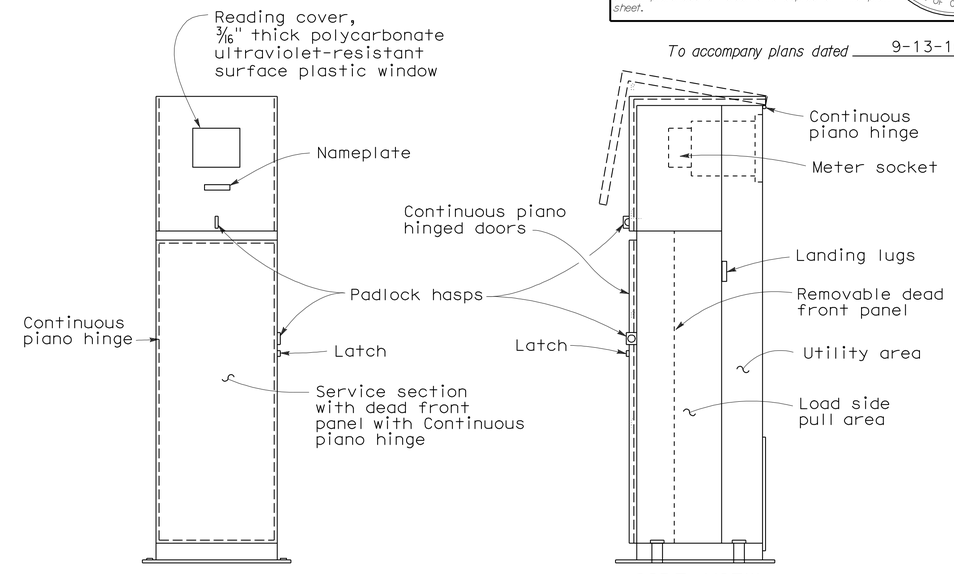

FRONT VIEW

SIDE VIEW

TYPE III-BF SERVICE EQUIPMENT ENCLOSURE WITH PROVISIONS FOR ONE 100 A METER (TYPICAL)

TYPE III-B SERVICE (120/240 V) EQUIPMENT LEGEND		
ITEM No.	COMPONENT	NAME PLATE DESCRIPTION
1	Neutral lug	
2	Landing lug (Note 6)	
3	Test bypass facility	
4	Meter socket and support	
5	Terminal blocks	
6	Neutral bus	
7	Ground bus	
8	Grounding electrode	
9	30 A, 2PNO Contactor	Sign Illumination
10	Photoelectric unit (Note 7)	
11	15 A, 1P, Test switch	Sign Illumination Test Switch
12	15 A, 120 V, 1P, CB	Sign Illumination Control
13	15 A, 120 V, 1P, CB	Flashing Beacon
14	30 A, 240 V, 2P, CB	Sign Illumination
15	100 A, 240 V, 2P, CB	Main Breaker
16	30 A, 240 V, 2P, CB	Lighting
17	50 A, 120 V, 1P, CB	Signals
18	30 A, 120 V, 1P, CB	Ramp Metering
19	20 A, 120 V, 1P, CB	Irrigation
20	15 A, 120 V, 1P, CB	Lighting Control
21	Photoelectric unit (Note 7)	
22	15 A, 1P, Test switch	Lighting Test Switch
23	60 A, 2PNO Contactor	Lighting
24	15 A, 120 V, 1P, CB	IISNS
25	30 A, 2PNO Contactor	IISNS
26	20 A, 120 V, IP, CB	Telephone Demarcation Cabinet

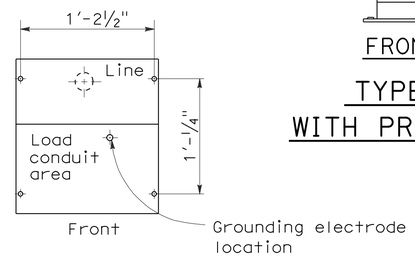

BASE FOR TYPE III-B SERVICE EQUIPMENT ENCLOSURE

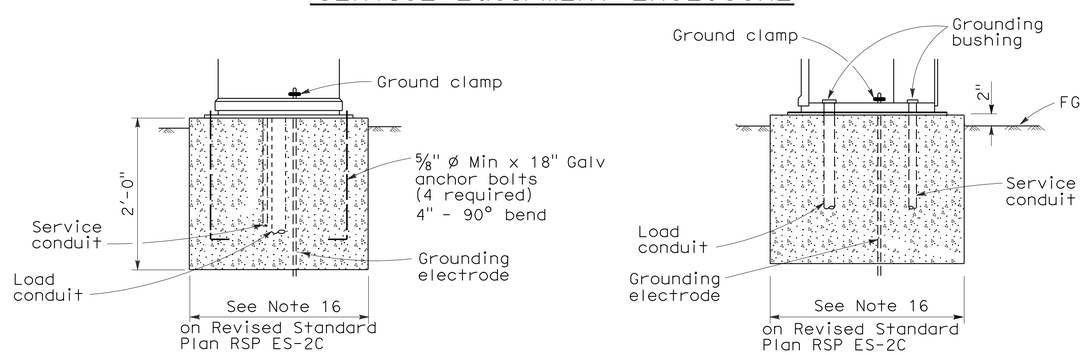

FRONT VIEW

SIDE VIEW

TYPE III-B SERVICE EQUIPMENT ENCLOSURE FOUNDATION DETAILS

NOTES: (FOR SERVICE EQUIPMENT ENCLOSURE)

1. Voltage ratings of service equipment shall conform to the service voltages indicated on the plans.
2. Unless otherwise indicated on the plans, service equipment items shall be provided for each service equipment enclosure as shown.
3. Connect to remote test switch mounted on lighting standards, sign post or structure when required.
4. Items No. 1 and 6 shall be isolated from the service equipment enclosure.
5. Meter sockets shall be 5 clip type.
6. The landing lug shall be suitable for multiple conductors.
7. Type V photoelectric control shall be used unless otherwise indicated on the plans.

STATE OF CALIFORNIA
DEPARTMENT OF TRANSPORTATION

ELECTRICAL SYSTEMS (SERVICE EQUIPMENT AND TYPICAL WIRING DIAGRAM, TYPE III-B SERIES)

NO SCALE

RSP ES-2E DATED OCTOBER 5, 2007 SUPERCEDES STANDARD PLAN ES-2E DATED MAY 1, 2006 - PAGE 407 OF THE STANDARD PLANS BOOK DATED MAY 2006.

REVISED STANDARD PLAN RSP ES-2E

2006 REVISED STANDARD PLAN RSP ES-2E

7-10-07

DIST	COUNTY	ROUTE	POST MILES TOTAL PROJECT	SHEET NO.	TOTAL SHEETS
05	Mon	101	86.6/R87.7	43	43

REGISTERED ELECTRICAL ENGINEER

October 5, 2007
PLANS APPROVAL DATE

REGISTERED PROFESSIONAL ENGINEER Jeffery G. McRae No. E14512 Exp. 6-30-08 ELECTRICAL STATE OF CALIFORNIA

The State of California or its officers or agents shall not be responsible for the accuracy or completeness of electronic copies of this plan sheet.

To accompany plans dated 9-13-10

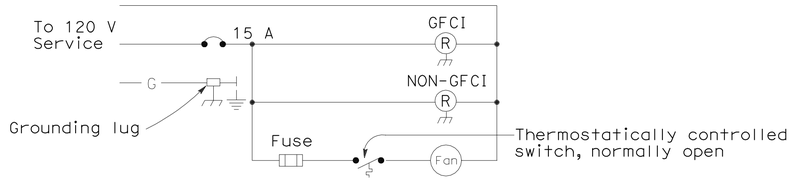

WIRING DIAGRAM

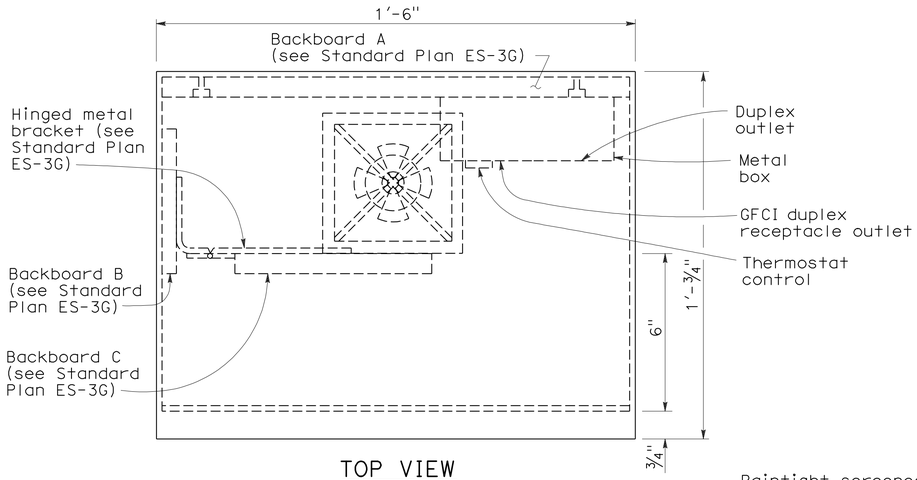

TOP VIEW

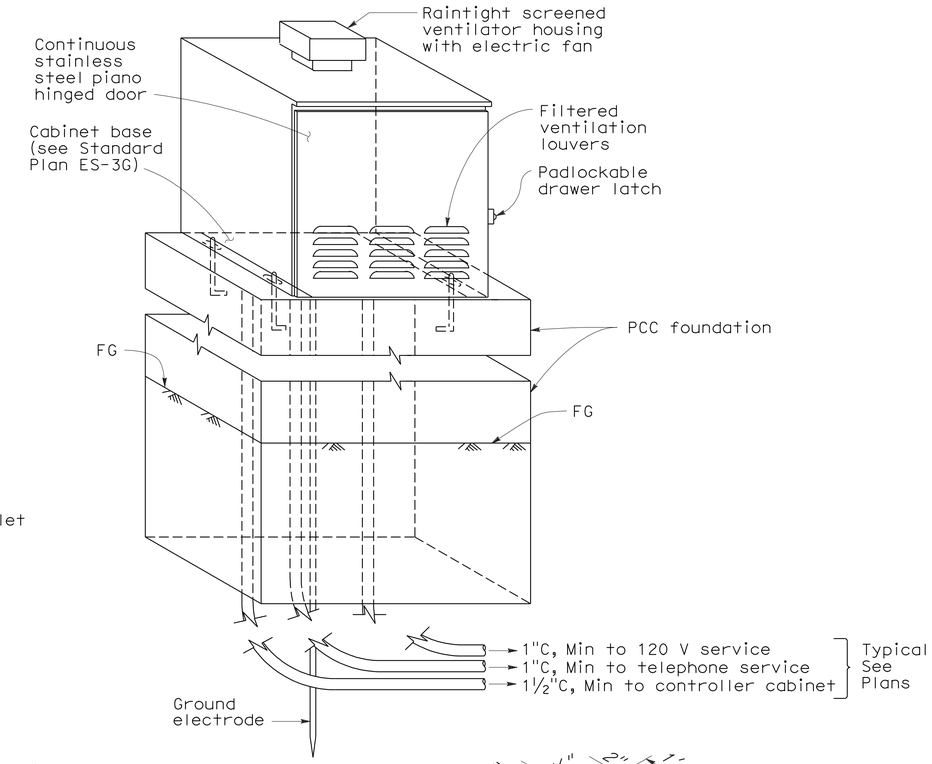

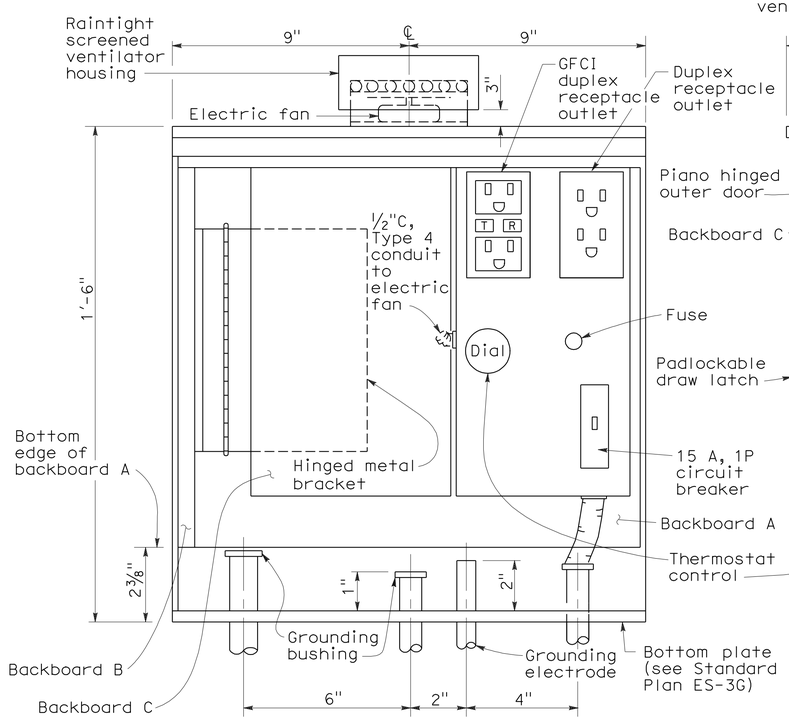

FRONT VIEW
(Outer door removed)

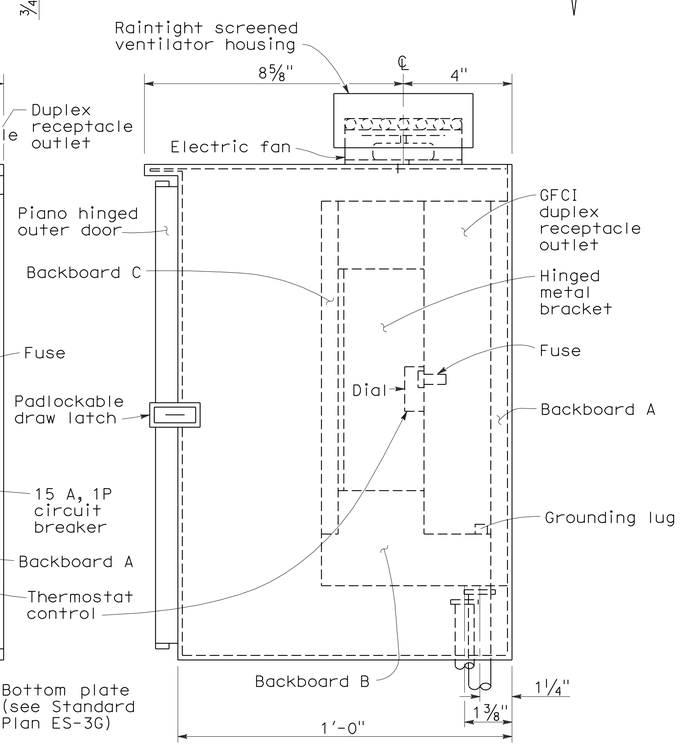

SIDE VIEW

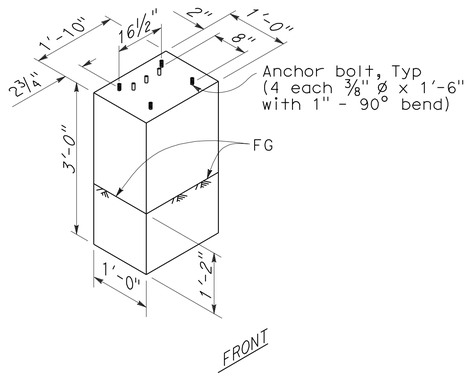

FOUNDATION DETAILS

NOTES:

1. Telephone demarcation cabinet shall be furnished with mounting boards, thermostat, fan, outlet box, circuit breaker and outlet plate. Dimensions are nominal.
2. An approved mastic or caulking compound shall be placed on the foundation prior to placing the cabinet to seal openings between bottom of cabinet and foundation.
3. In unpaved areas, a raised PCC pad shall be placed in front of the telephone demarcation cabinet. Pad shall be 1'-10" x 3'-0" x 4" thick, with 2" above the finished grade.
4. All conduits shall be bonded to the enclosure.
5. Telephone demarcation cabinet:
   a) Material shall be anodized aluminum (⅛" thick).
   b) Fabrication shall conform to the requirements of the Standard Specifications.
   c) Ventilation louvers shall be located in door.
   d) Door shall be lockable with padlock.
   e) Fan shall be mounted in a ventilator housing.
   f) Fan capacity shall be at least 25 cubic feet per minute.
   g) Fan shall be thermostatically controlled and adjustable to turn on between 80°F and 130°F.
   h) Fan circuit shall be fused at 175 percent of the fan motor capacity.
6. Hardware for fastening of mounting boards:
   a) Fasten backboard A and backboard B to telephone demarcation cabinet with 3/16" ø x ¾" stainless steel carriage bolts (8 required).
   b) Fasten hinged metal bracket to backboard B and backboard C to hinged metal bracket with number No. 10 x ¾" wood screws (9 required).

STATE OF CALIFORNIA
DEPARTMENT OF TRANSPORTATION

ELECTRICAL SYSTEMS (TELEPHONE DEMARCATION CABINET, TYPE C)

NO SCALE

RSP ES-3F DATED OCTOBER 5, 2007 SUPERCEDES STANDARD PLAN ES-3F DATED MAY 1, 2006 - PAGE 415 OF THE STANDARD PLANS BOOK DATED MAY 2006.

REVISED STANDARD PLAN RSP ES-3F

2006 REVISED STANDARD PLAN RSP ES-3F

7-26-07