HSNHG-Q101(190)E

Dist	COUNTY	ROUTE	POST MILES TOTAL PROJECT	SHEET No.	TOTAL SHEETS
05	SLO	101	55.8/57.9	1	65

STATE OF CALIFORNIA
DEPARTMENT OF TRANSPORTATION

PROJECT PLANS FOR CONSTRUCTION ON
STATE HIGHWAY
IN SAN LUIS OBISPO COUNTY
IN PASO ROBLES
FROM SOUTH PASO ROBLES OVERHEAD
TO NORTH JUNCTION ROUTE 101/46 SEPARATION

TO BE SUPPLEMENTED BY STANDARD PLANS DATED MAY 2006

INDEX OF PLANS

SHEET No.	DESCRIPTION
1	TITLE AND LOCATION MAP
2-6	TYPICAL CROSS SECTIONS
7-14	LAYOUTS
15-17	CONSTRUCTION DETAILS
18-25	DRAINAGE PLANS, PROFILES, DETAILS AND QUANTITIES
26-27	UTILITY PLANS
28	CONSTRUCTION AREA SIGNS
29-30	SUMMARY OF QUANTITIES
31-41	HIGHWAY PLANTING
42-43	ELECTRICAL PLANS
44-65	REVISED AND NEW STANDARD PLANS

THE STANDARD PLANS LIST APPLICABLE TO THIS CONTRACT IS INCLUDED IN THE NOTICE TO BIDDERS AND SPECIAL PROVISIONS BOOK.

LOCATION MAP

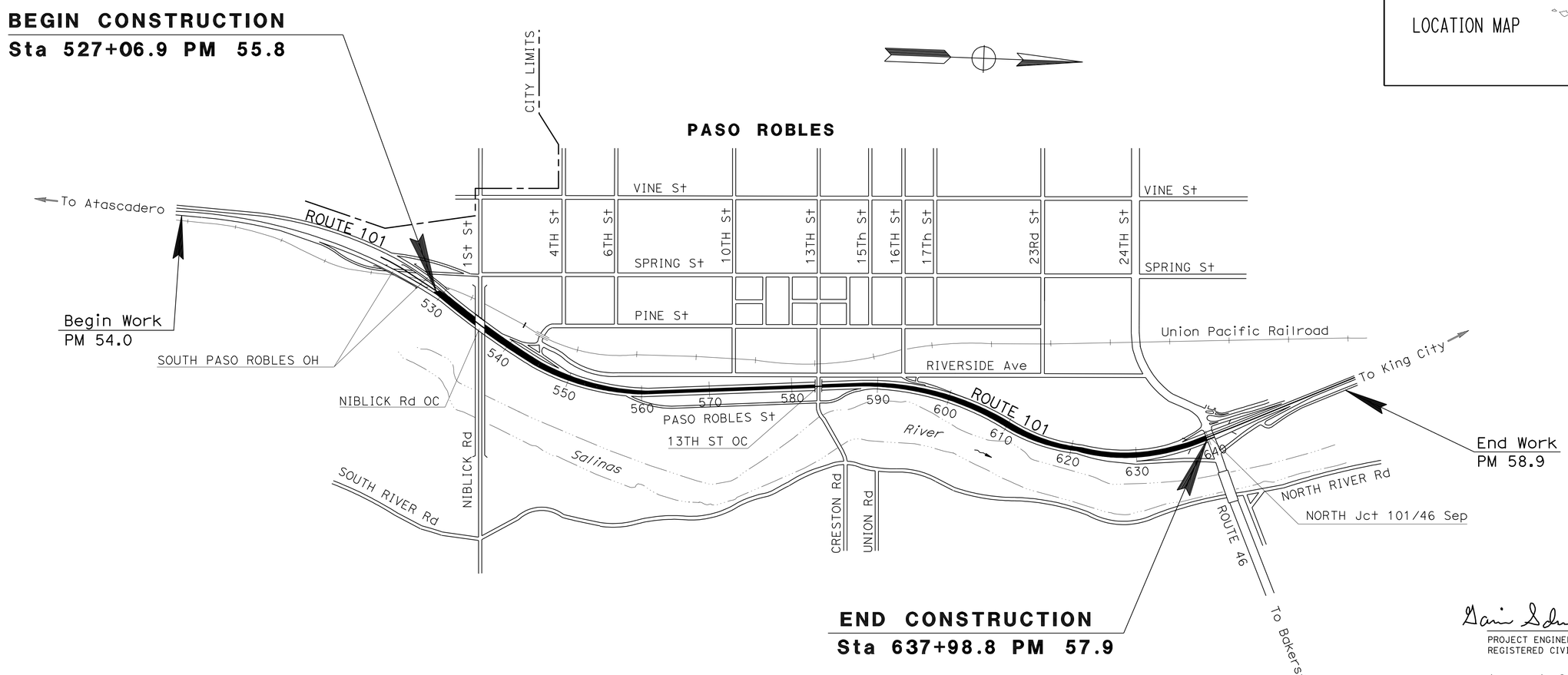

NO SCALE

THE CONTRACTOR SHALL POSSESS THE CLASS (OR CLASSES) OF LICENSE AS SPECIFIED IN THE "NOTICE TO BIDDERS."

PROJECT MANAGER: AMY DONATELLO

DESIGN ENGINEER: STEVEN M. WYATT

PROJECT ENGINEER REGISTERED CIVIL ENGINEER — DATE 7-8-10

REGISTERED PROFESSIONAL ENGINEER G.K. SCHNEIDER No. 66985 Exp. 9/30/10 CIVIL STATE OF CALIFORNIA

August 23, 2010
PLANS APPROVAL DATE

THE STATE OF CALIFORNIA OR ITS OFFICERS OR AGENTS SHALL NOT BE RESPONSIBLE FOR THE ACCURACY OR COMPLETENESS OF SCANNED COPIES OF THIS PLAN SHEET.

CONTRACT No.	05-0Q6404
PROJECT ID	0500000321

LAST REVISION 07-08-10 | DATE PLOTTED => 22-SEP-2010 | TIME PLOTTED => 05:56

Dist	COUNTY	ROUTE	POST MILES TOTAL PROJECT	SHEET No.	TOTAL SHEETS
05	SLO	101	55.8/57.9	2	65

REGISTERED CIVIL ENGINEER 7-8-10 DATE

8-23-10
PLANS APPROVAL DATE

REGISTERED PROFESSIONAL ENGINEER G.K. SCHNEIDER No. 66985 Exp. 9/30/10 CIVIL STATE OF CALIFORNIA

THE STATE OF CALIFORNIA OR ITS OFFICERS OR AGENTS SHALL NOT BE RESPONSIBLE FOR THE ACCURACY OR COMPLETENESS OF SCANNED COPIES OF THIS PLAN SHEET.

NOTES:

1. DIMENSIONS OF THE PAVEMENT STRUCTURES (STRUCTURAL SECTIONS) ARE SUBJECT TO TOLERANCES SPECIFIED IN THE STANDARD SPECIFICATIONS.
2. SUPERELEVATION AS SHOWN OR AS DIRECTED BY THE ENGINEER.
3. FOR ARCHITECTURAL TREATMENT SEE CONSTRUCTION DETAIL SHEETS.
4. FOR EXISTING MEDIAN PLANTING TO REMAIN SEE PLANTING PLAN SHEETS.

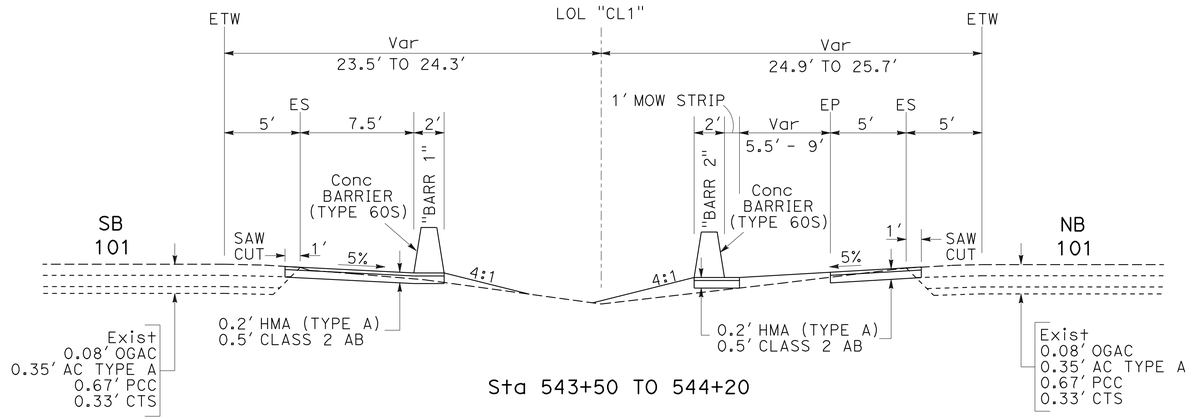

Sta 543+50 TO 544+20

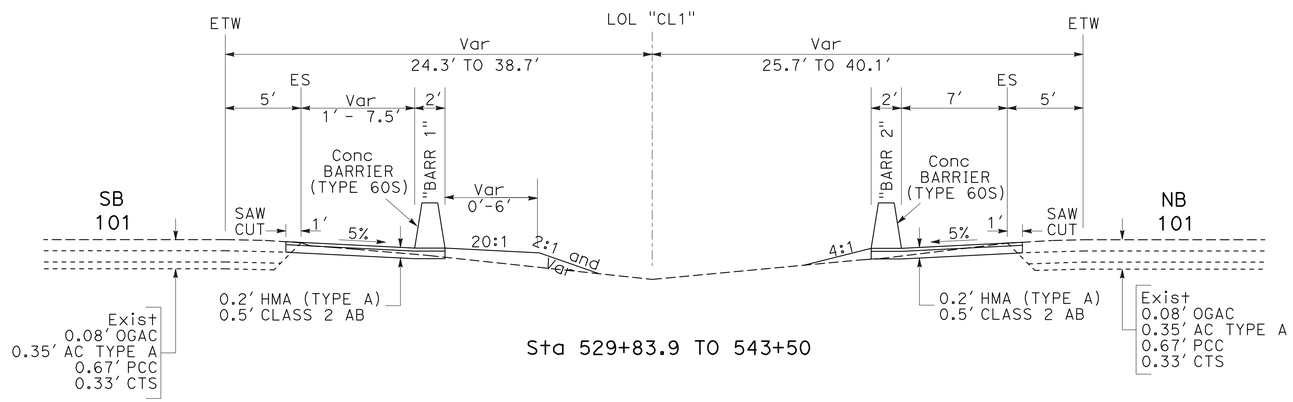

Sta 529+83.9 TO 543+50

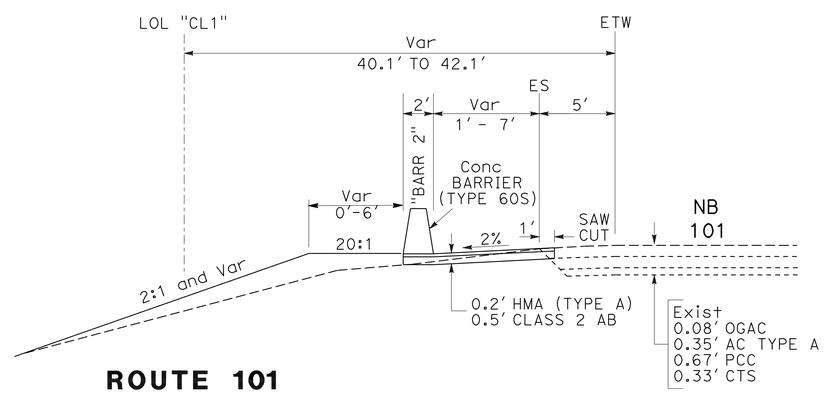

ROUTE 101

Sta 527+06.9 TO 529+83.9

DESIGN DESIGNATION (Rte 101)
PM 55.67 TO PM 56.88

2009 ADT = 41,763 D = 55%
2029 ADT = 66,849 T = 8.2%
DHV = 4,924 V = 70 MPH

DESIGN DESIGNATION (Rte 101)
PM 56.88 TO PM 57.92

2009 ADT = 37,116 D = 55%
2029 ADT = 57,893 T = 8.2%
DHV = 4,415 V = 70 MPH

TYPICAL CROSS SECTIONS

NO SCALE

X-1

STATE OF CALIFORNIA - DEPARTMENT OF TRANSPORTATION
Caltrans®
DESIGN

FUNCTIONAL SUPERVISOR: S. WYATT
CALCULATED-DESIGNED BY: G.K. SCHNEIDER
CHECKED BY: M. O'NEAL
REVISED BY
DATE REVISED

LAST REVISION 07-08-10
DATE PLOTTED => 25-AUG-2010
TIME PLOTTED => 13:41

Dist	COUNTY	ROUTE	POST MILES TOTAL PROJECT	SHEET No.	TOTAL SHEETS
05	SLO	101	55.8/57.9	3	65

REGISTERED CIVIL ENGINEER 7-8-10 DATE

8-23-10
PLANS APPROVAL DATE

REGISTERED PROFESSIONAL ENGINEER G.K. SCHNEIDER No. 66985 Exp. 9/30/10 CIVIL STATE OF CALIFORNIA

THE STATE OF CALIFORNIA OR ITS OFFICERS OR AGENTS SHALL NOT BE RESPONSIBLE FOR THE ACCURACY OR COMPLETENESS OF SCANNED COPIES OF THIS PLAN SHEET.

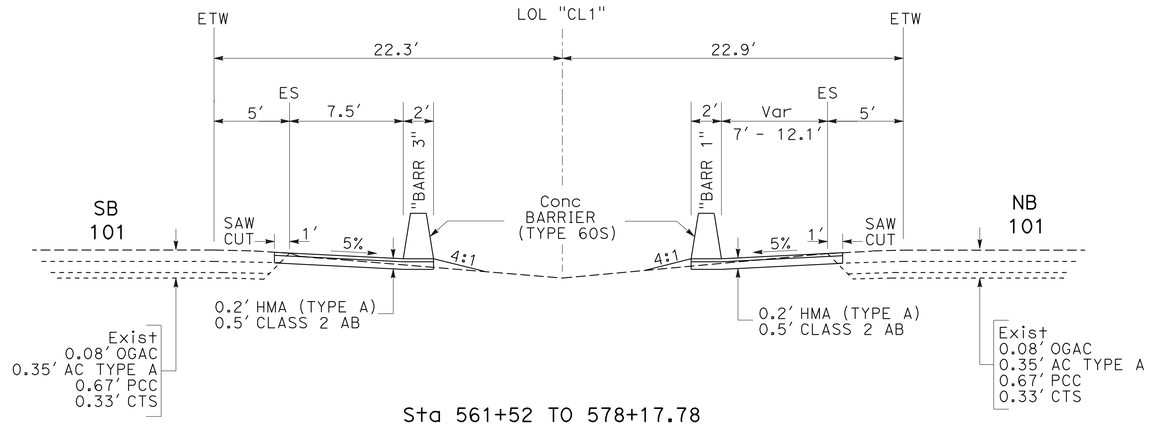

Sta 561+52 TO 578+17.78

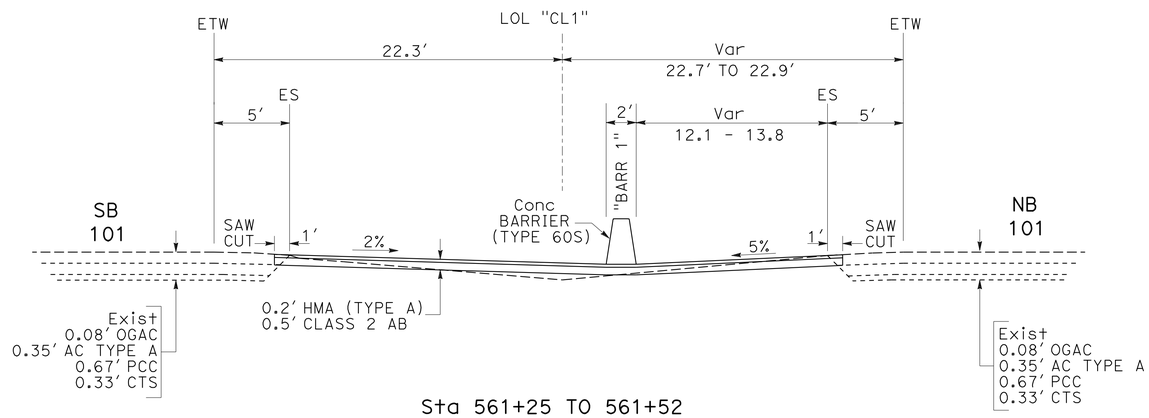

Sta 561+25 TO 561+52

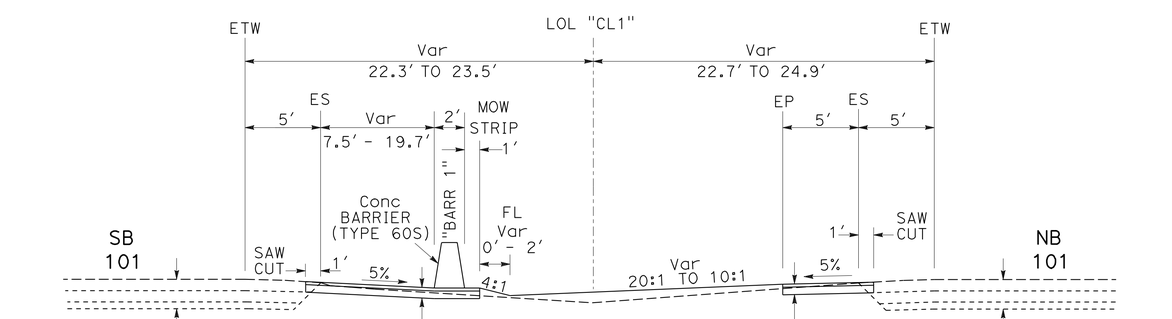

Sta 544+20 TO 561+25

ROUTE 101

TYPICAL CROSS SECTIONS

NO SCALE

X-2

STATE OF CALIFORNIA - DEPARTMENT OF TRANSPORTATION
Caltrans®
DESIGN

FUNCTIONAL SUPERVISOR: S. WYATT
CALCULATED-DESIGNED BY: G.K. SCHNEIDER
CHECKED BY: M. O'NEAL
REVISED BY
DATE REVISED

LAST REVISION DATE PLOTTED => 25-AUG-2010
TIME PLOTTED => 13:41

Dist	COUNTY	ROUTE	POST MILES TOTAL PROJECT	SHEET No.	TOTAL SHEETS
05	SLO	101	55.8/57.9	4	65

REGISTERED CIVIL ENGINEER 7-8-10 DATE

8-23-10
PLANS APPROVAL DATE

REGISTERED PROFESSIONAL ENGINEER G.K. SCHNEIDER No. 66985 Exp. 9/30/10 CIVIL STATE OF CALIFORNIA

THE STATE OF CALIFORNIA OR ITS OFFICERS OR AGENTS SHALL NOT BE RESPONSIBLE FOR THE ACCURACY OR COMPLETENESS OF SCANNED COPIES OF THIS PLAN SHEET.

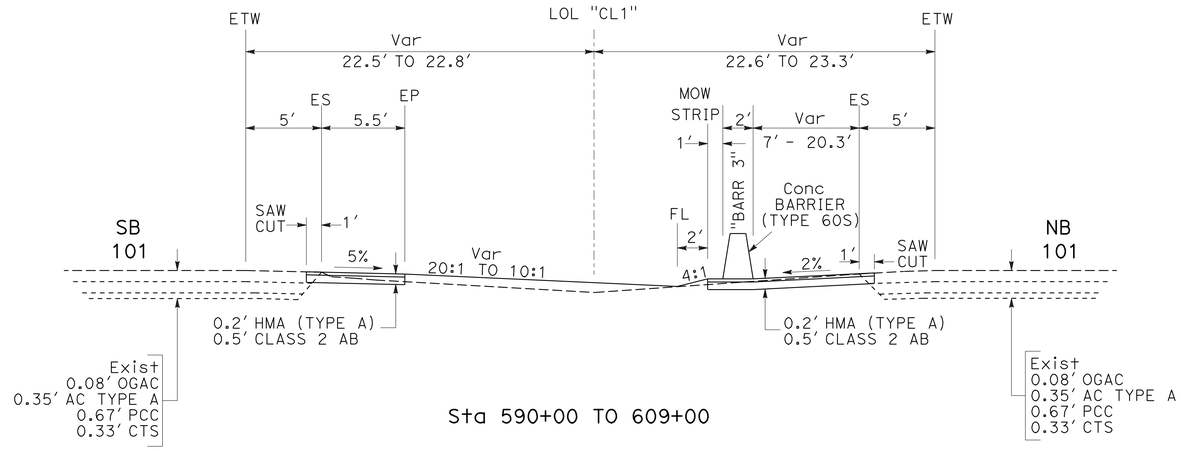

Sta 590+00 TO 609+00

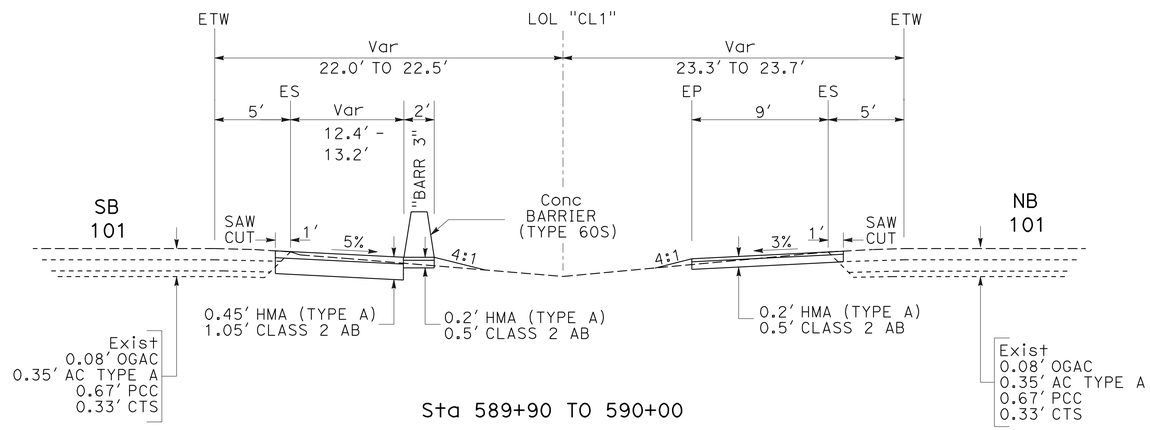

Sta 589+90 TO 590+00

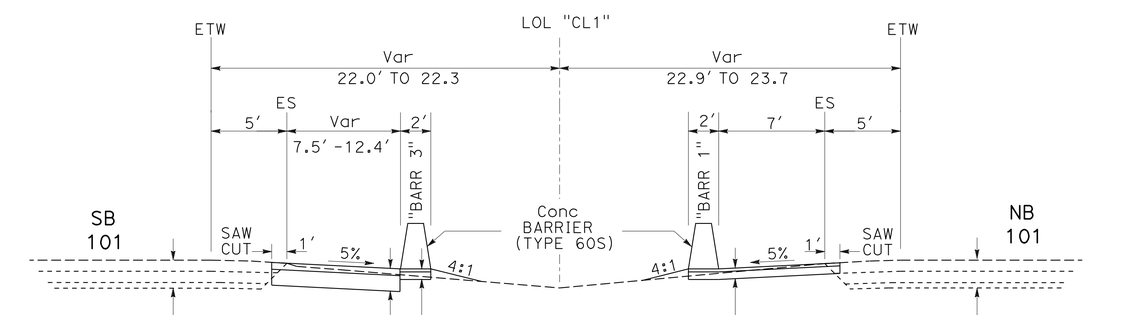

ROUTE 101

Sta 578+17.78 TO 589+90

TYPICAL CROSS SECTIONS

NO SCALE

X-3

STATE OF CALIFORNIA - DEPARTMENT OF TRANSPORTATION

Caltrans® **DESIGN**

FUNCTIONAL SUPERVISOR: S. WYATT

CALCULATED-DESIGNED BY: G.K. SCHNEIDER

CHECKED BY: M. O'NEAL

REVISED BY

DATE REVISED

LAST REVISION DATE PLOTTED => 25-AUG-2010
07-08-10 TIME PLOTTED => 13:41

Dist	COUNTY	ROUTE	POST MILES TOTAL PROJECT	SHEET No.	TOTAL SHEETS
05	SLO	101	55.8/57.9	5	65

REGISTERED CIVIL ENGINEER 7-8-10 DATE

8-23-10
PLANS APPROVAL DATE

REGISTERED PROFESSIONAL ENGINEER G.K. SCHNEIDER No. 66985 Exp. 9/30/10 CIVIL STATE OF CALIFORNIA

THE STATE OF CALIFORNIA OR ITS OFFICERS OR AGENTS SHALL NOT BE RESPONSIBLE FOR THE ACCURACY OR COMPLETENESS OF SCANNED COPIES OF THIS PLAN SHEET.

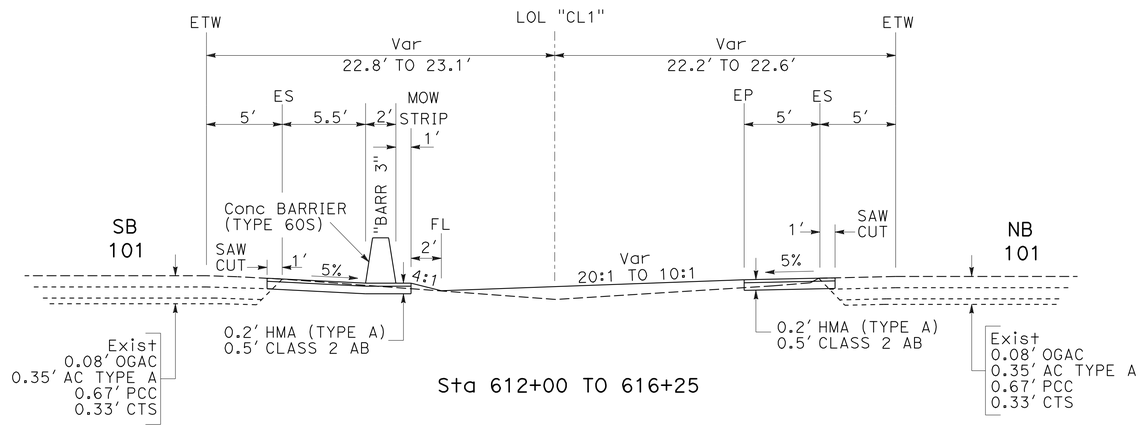

Sta 612+00 TO 616+25

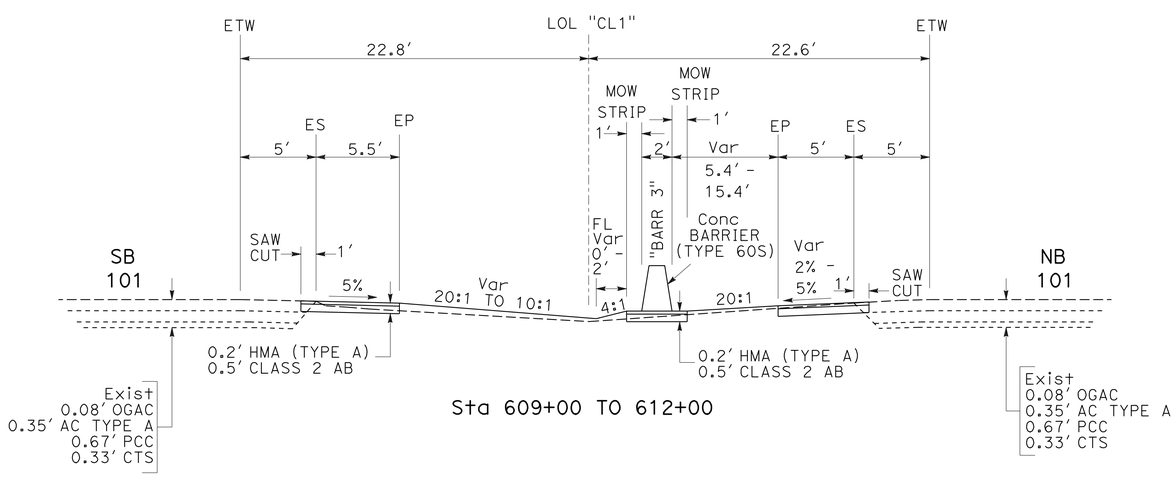

Sta 609+00 TO 612+00

TYPICAL CROSS SECTIONS

NO SCALE

X-4

STATE OF CALIFORNIA - DEPARTMENT OF TRANSPORTATION

Caltrans®

DESIGN

FUNCTIONAL SUPERVISOR: S. WYATT

CALCULATED-DESIGNED BY: G.K. SCHNEIDER

CHECKED BY: M. O'NEAL

REVISED BY

DATE REVISED

LAST REVISION 07-08-10

DATE PLOTTED => 25-AUG-2010
TIME PLOTTED => 13:41

Dist	COUNTY	ROUTE	POST MILES TOTAL PROJECT	SHEET No.	TOTAL SHEETS
05	SLO	101	55.8/57.9	6	65

REGISTERED CIVIL ENGINEER 7-8-10 DATE

8-23-10
PLANS APPROVAL DATE

REGISTERED PROFESSIONAL ENGINEER G.K. SCHNEIDER No. 66985 Exp. 9/30/10 CIVIL STATE OF CALIFORNIA

THE STATE OF CALIFORNIA OR ITS OFFICERS OR AGENTS SHALL NOT BE RESPONSIBLE FOR THE ACCURACY OR COMPLETENESS OF SCANNED COPIES OF THIS PLAN SHEET.

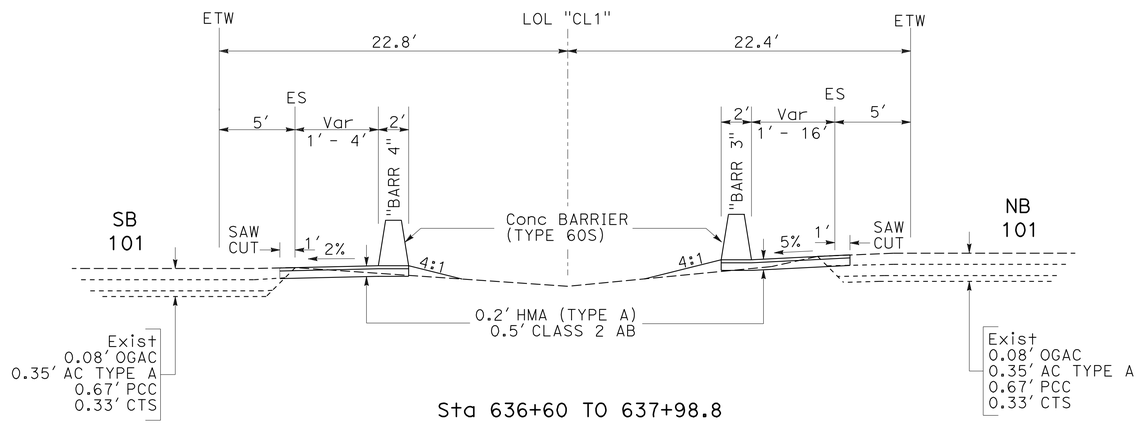

Sta 636+60 TO 637+98.8

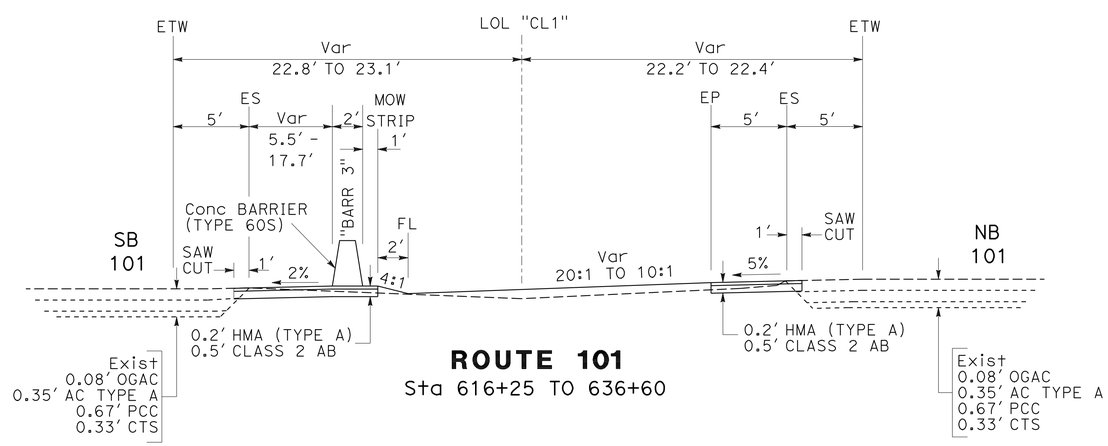

ROUTE 101

Sta 616+25 TO 636+60

TYPICAL CROSS SECTIONS

NO SCALE

X-5

STATE OF CALIFORNIA - DEPARTMENT OF TRANSPORTATION

Caltrans®

DESIGN

FUNCTIONAL SUPERVISOR: S. WYATT

CALCULATED-DESIGNED BY: G.K. SCHNEIDER

CHECKED BY: M. O'NEAL

REVISED BY

DATE REVISED

LAST REVISION 07-08-10

DATE PLOTTED => 25-AUG-2010

TIME PLOTTED => 13:41

Dist	COUNTY	ROUTE	POST MILES TOTAL PROJECT	SHEET No.	TOTAL SHEETS
05	SLO	101	55.8/57.9	7	65

REGISTERED CIVIL ENGINEER 7-8-10 DATE

8-23-10
PLANS APPROVAL DATE

REGISTERED PROFESSIONAL ENGINEER G.K. SCHNEIDER No. 66985 Exp. 9/30/10 CIVIL STATE OF CALIFORNIA

THE STATE OF CALIFORNIA OR ITS OFFICERS OR AGENTS SHALL NOT BE RESPONSIBLE FOR THE ACCURACY OR COMPLETENESS OF SCANNED COPIES OF THIS PLAN SHEET.

NOTES:
1. FOR ACCURATE RIGHT OF WAY DATA, CONTACT RIGHT OF WAY ENGINEERING AT THE DISTRICT OFFICE.
2. SEE PLAN SHEET D-1 FOR DRAINAGE PLAN AND PROFILES AND DD-1 FOR DRAINAGE DETAILS.
3. SEE BARRIER TRANSITION DETAIL SHEET
4. FOR ARCHITECTURAL TREATMENT SEE CONSTRUCTION DETAIL SHEETS.
5. FOR EXISTING MEDIAN PLANTING TO REMAIN SEE PLANTING PLAN SHEETS.

LEGEND
TB - TOP CENTER OF BARRIER
BB - PROFILE GRADE AT BOTTOM OF BARRIER
DRAINAGE SYSTEM No.
Conc BARRIER
LIMITS OF PAVING

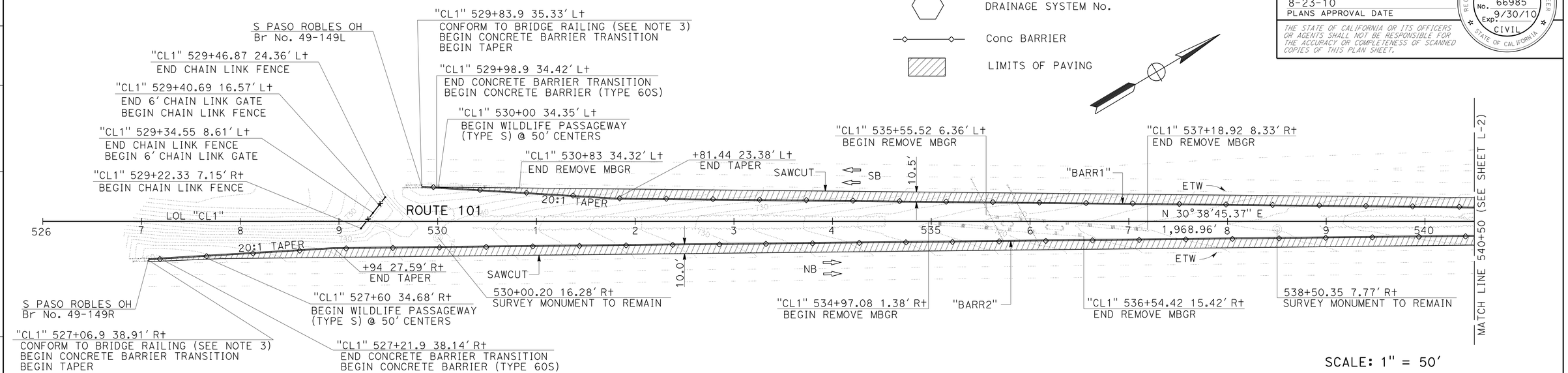

SCALE: 1" = 50'

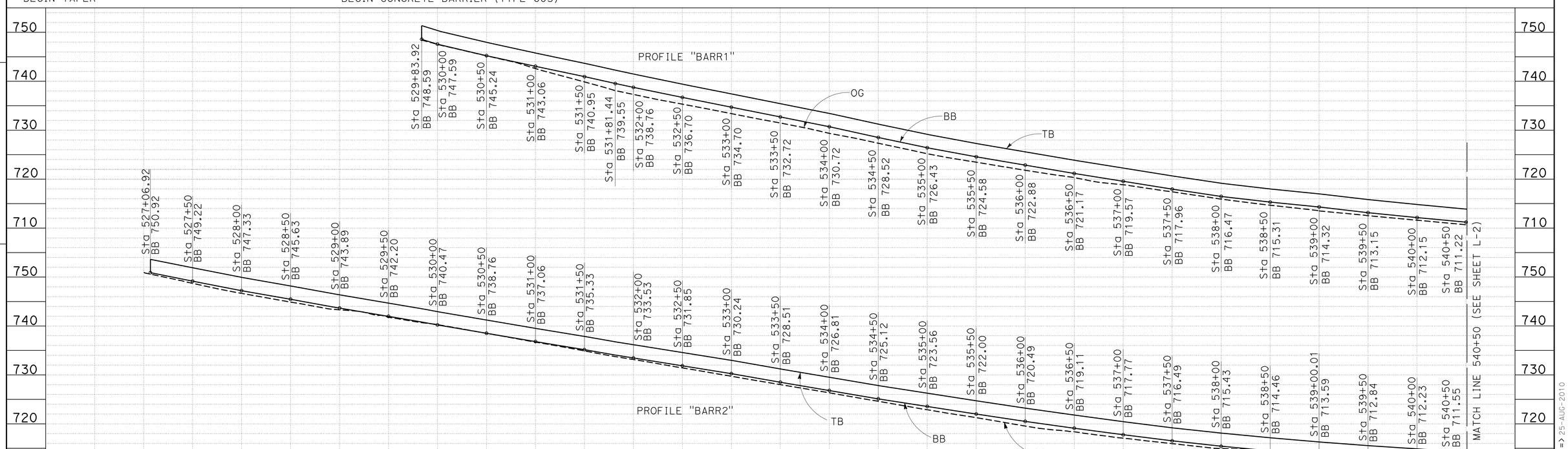

SCALE: Horiz 1" = 50'
Vert 1" = 5'

LAYOUT L-1

STATE OF CALIFORNIA - DEPARTMENT OF TRANSPORTATION
Caltrans DESIGN

FUNCTIONAL SUPERVISOR: S. WYATT
CALCULATED-DESIGNED BY: G.K. SCHNEIDER
CHECKED BY: M. O'NEAL
REVISED BY
DATE REVISED

LAST REVISION 07-08-10
DATE PLOTTED => 25-AUG-2010
TIME PLOTTED => 13:41

Dist	COUNTY	ROUTE	POST MILES TOTAL PROJECT	SHEET No.	TOTAL SHEETS
05	SLO	101	55.8/57.9	8	65

REGISTERED CIVIL ENGINEER 7-8-10 DATE

8-23-10
PLANS APPROVAL DATE

REGISTERED PROFESSIONAL ENGINEER G.K. SCHNEIDER No. 66985 Exp. 9/30/10 CIVIL STATE OF CALIFORNIA

THE STATE OF CALIFORNIA OR ITS OFFICERS OR AGENTS SHALL NOT BE RESPONSIBLE FOR THE ACCURACY OR COMPLETENESS OF SCANNED COPIES OF THIS PLAN SHEET.

NOTE:

FOR ACCURATE RIGHT OF WAY DATA, CONTACT RIGHT OF WAY ENGINEERING AT THE DISTRICT OFFICE.

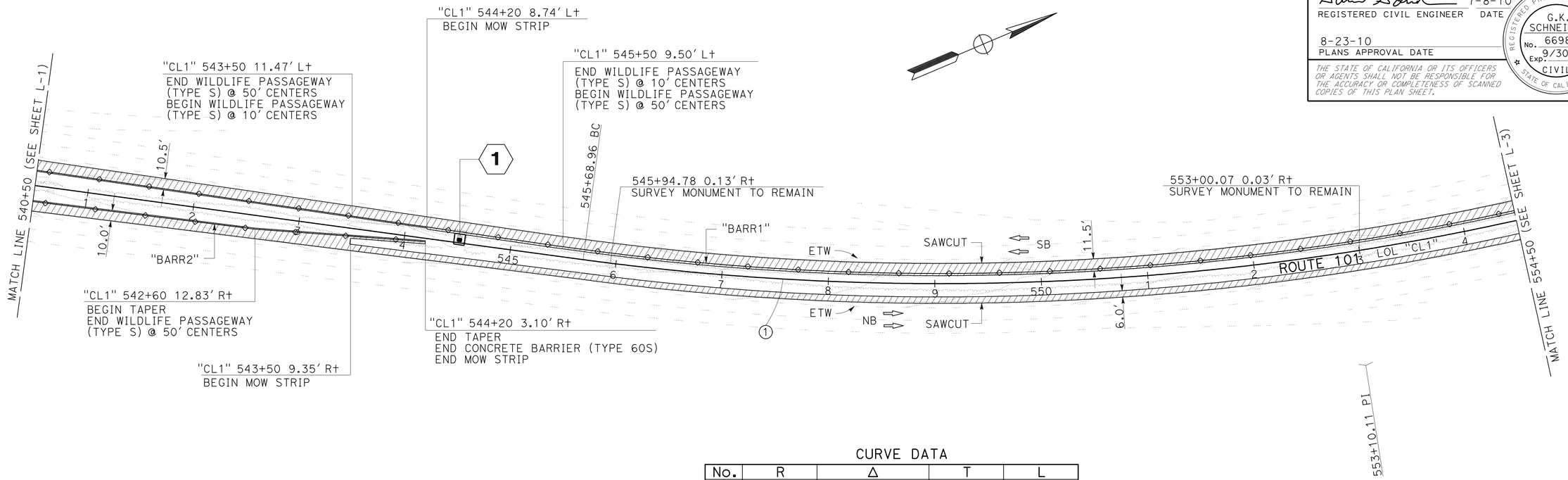

CURVE DATA

No.	R	Δ	T	L
1	2500.00'	33°1'32"	741.14'	1441.02'

SCALE: 1" = 50'

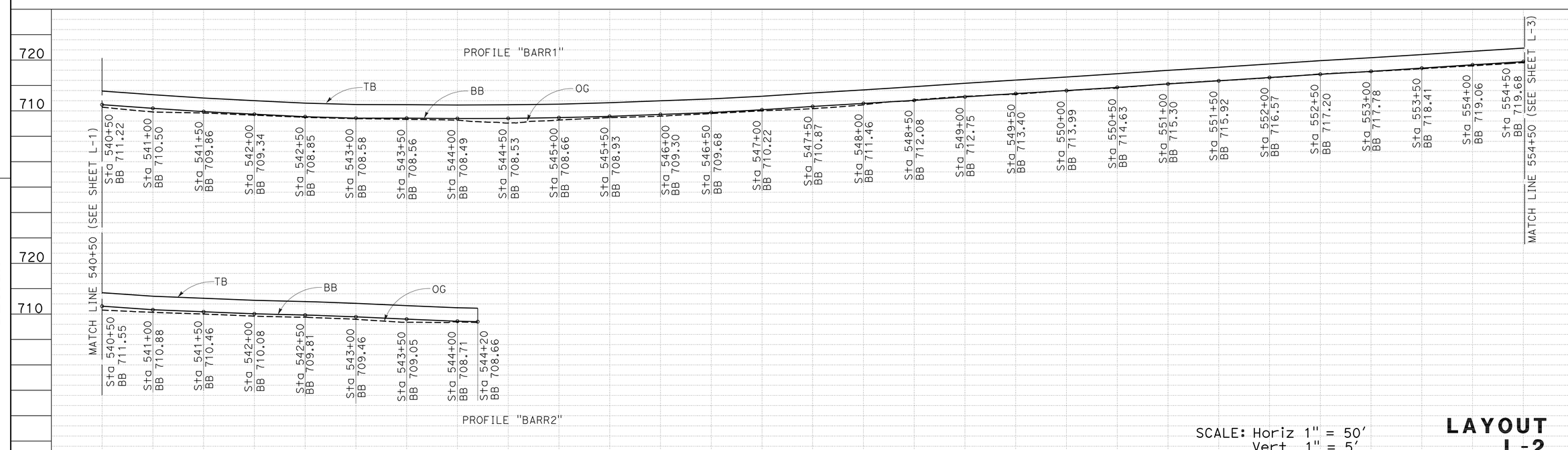

STATE OF CALIFORNIA - DEPARTMENT OF TRANSPORTATION

Caltrans DESIGN

FUNCTIONAL SUPERVISOR S. WYATT

CALCULATED-DESIGNED BY G.K. SCHNEIDER

CHECKED BY M. O'NEAL

REVISED BY

DATE REVISED

LAST REVISION DATE PLOTTED => 25-AUG-2010 TIME PLOTTED => 13:41

07-08-10

BORDER LAST REVISED 7/2/2010

USERNAME => trcarol
DGN FILE => 0500000321ea002.dgn

RELATIVE BORDER SCALE IS IN INCHES 0 1 2 3

UNIT 1450

PROJECT NUMBER & PHASE 05000003211

Dist	COUNTY	ROUTE	POST MILES TOTAL PROJECT	SHEET No.	TOTAL SHEETS
05	SLO	101	55.8/57.9	9	65

REGISTERED CIVIL ENGINEER 7-8-10 DATE

8-23-10
PLANS APPROVAL DATE

REGISTERED PROFESSIONAL ENGINEER G.K. SCHNEIDER No. 66985 Exp. 9/30/10 CIVIL STATE OF CALIFORNIA

THE STATE OF CALIFORNIA OR ITS OFFICERS OR AGENTS SHALL NOT BE RESPONSIBLE FOR THE ACCURACY OR COMPLETENESS OF SCANNED COPIES OF THIS PLAN SHEET.

NOTE:
FOR ACCURATE RIGHT OF WAY DATA, CONTACT RIGHT OF WAY ENGINEERING AT THE DISTRICT OFFICE.

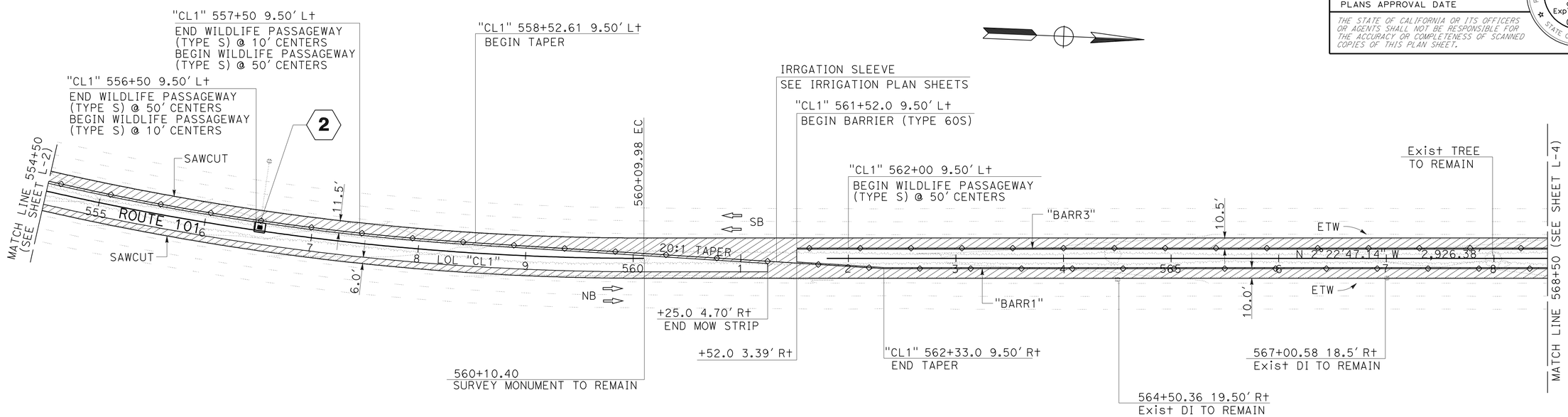

SCALE: 1" = 50'

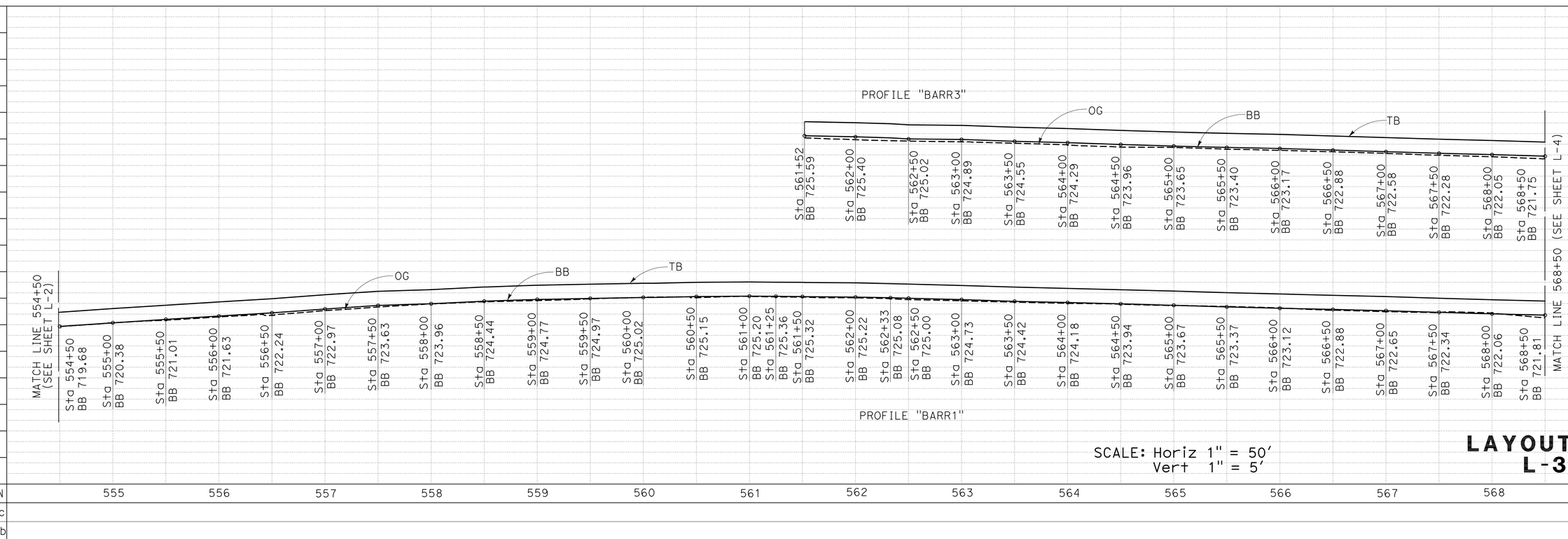

SCALE: Horiz 1" = 50'
Vert 1" = 5'

LAYOUT L-3

REVISED BY	DATE REVISED

CALCULATED-DESIGNED BY	CHECKED BY
G.K. SCHNEIDER	M. O'NEAL

FUNCTIONAL SUPERVISOR: S. WYATT

STATE OF CALIFORNIA - DEPARTMENT OF TRANSPORTATION
Caltrans
DESIGN

LAST REVISION 07-08-10 | DATE PLOTTED => 25-AUG-2010 | TIME PLOTTED => 13:28

Dist	COUNTY	ROUTE	POST MILES TOTAL PROJECT	SHEET No.	TOTAL SHEETS
05	SLO	101	55.8/57.9	10	65

REGISTERED CIVIL ENGINEER 7-8-10 DATE

8-23-10
PLANS APPROVAL DATE

REGISTERED PROFESSIONAL ENGINEER G.K. SCHNEIDER No. 66985 Exp. 9/30/10 CIVIL STATE OF CALIFORNIA

THE STATE OF CALIFORNIA OR ITS OFFICERS OR AGENTS SHALL NOT BE RESPONSIBLE FOR THE ACCURACY OR COMPLETENESS OF SCANNED COPIES OF THIS PLAN SHEET.

NOTE:

FOR ACCURATE RIGHT OF WAY DATA, CONTACT RIGHT OF WAY ENGINEERING AT THE DISTRICT OFFICE.

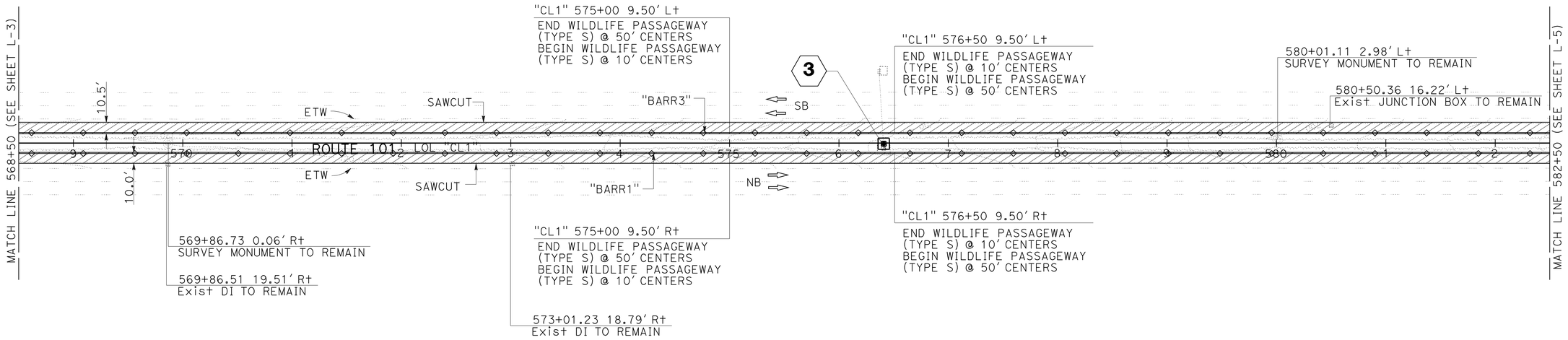

SCALE: 1" = 50'

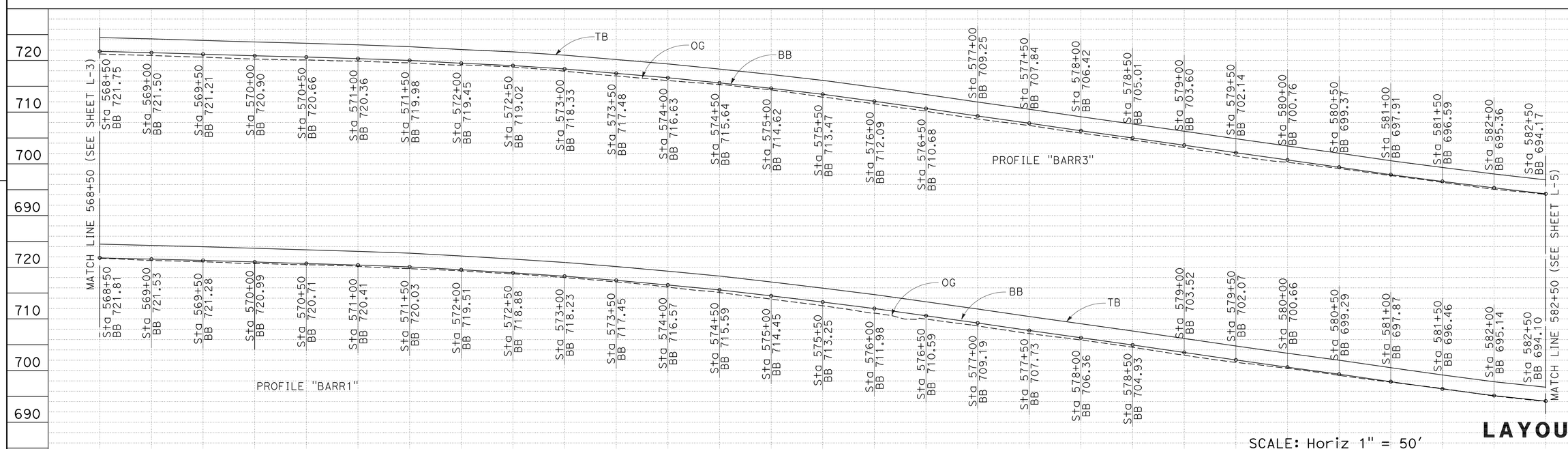

SCALE: Horiz 1" = 50'
Vert 1" = 5'

LAYOUT L-4

REVISED BY	DATE REVISED

G.K. SCHNEIDER — M. O'NEAL — CALCULATED-DESIGNED BY — CHECKED BY

FUNCTIONAL SUPERVISOR: S. WYATT

STATE OF CALIFORNIA - DEPARTMENT OF TRANSPORTATION

Caltrans DESIGN

LAST REVISION 07-08-10 | DATE PLOTTED => 25-AUG-2010 | TIME PLOTTED => 13:28

Dist	COUNTY	ROUTE	POST MILES TOTAL PROJECT	SHEET No.	TOTAL SHEETS
05	SLO	101	55.8/57.9	11	65

REGISTERED CIVIL ENGINEER 7-8-10 DATE

8-23-10
PLANS APPROVAL DATE

REGISTERED PROFESSIONAL ENGINEER G.K. SCHNEIDER No. 66985 Exp. 9/30/10 CIVIL STATE OF CALIFORNIA

THE STATE OF CALIFORNIA OR ITS OFFICERS OR AGENTS SHALL NOT BE RESPONSIBLE FOR THE ACCURACY OR COMPLETENESS OF SCANNED COPIES OF THIS PLAN SHEET.

NOTE:

FOR ACCURATE RIGHT OF WAY DATA, CONTACT RIGHT OF WAY ENGINEERING AT THE DISTRICT OFFICE.

CURVE DATA

No.	R	Δ	T	L
②	4000.00′	27°12′10″	967.81′	1899.11′

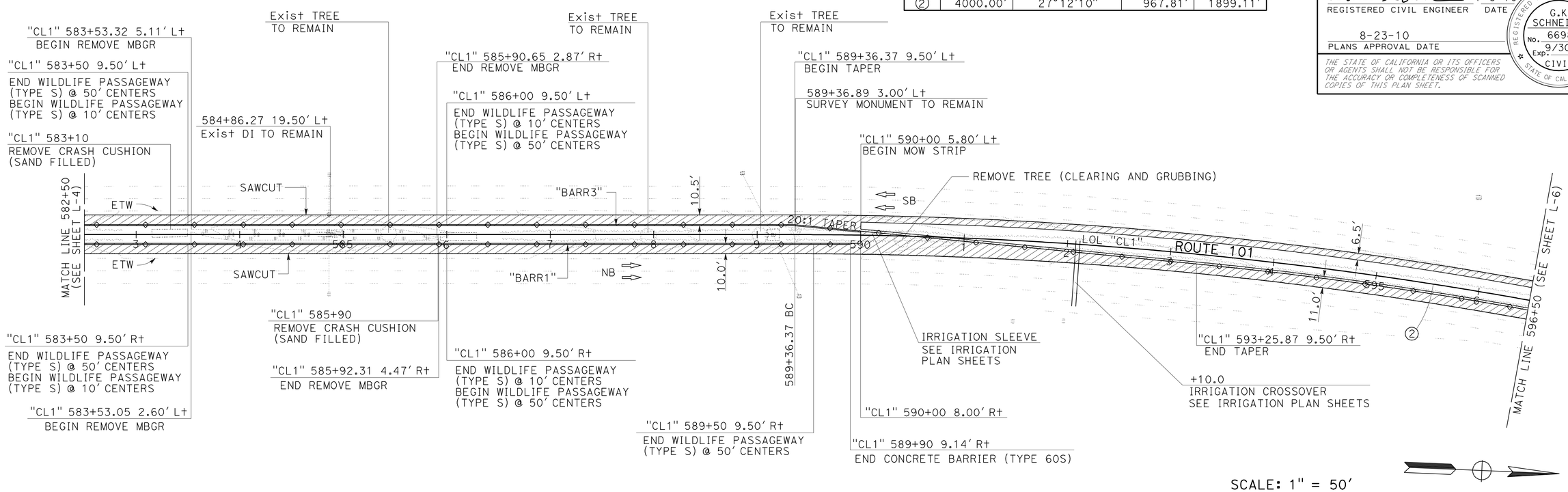

SCALE: 1" = 50′

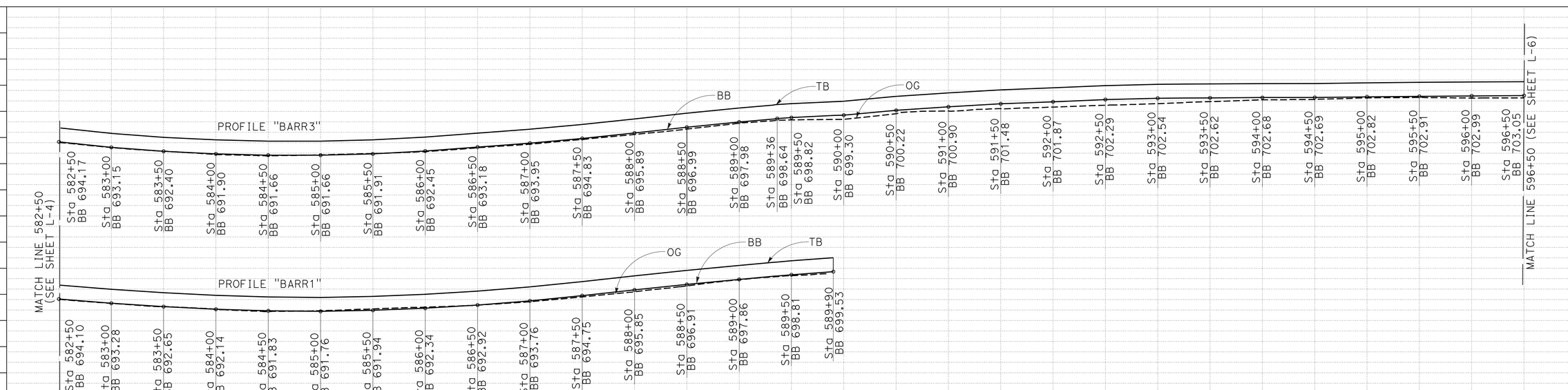

SCALE: Horiz 1" = 50′
Vert 1" = 5′

LAYOUT L-5

STATE OF CALIFORNIA - DEPARTMENT OF TRANSPORTATION
Caltrans
DESIGN

FUNCTIONAL SUPERVISOR: S. WYATT
CALCULATED-DESIGNED BY: G.K. SCHNEIDER
CHECKED BY: M. O'NEAL
REVISED BY
DATE REVISED

LAST REVISION 07-08-10
DATE PLOTTED => 25-AUG-2010
TIME PLOTTED => 13:28

Dist	COUNTY	ROUTE	POST MILES TOTAL PROJECT	SHEET No.	TOTAL SHEETS
05	SLO	101	55.8/57.9	12	65

REGISTERED CIVIL ENGINEER 7-8-10 DATE

8-23-10
PLANS APPROVAL DATE

REGISTERED PROFESSIONAL ENGINEER G.K. SCHNEIDER No. 66985 Exp. 9/30/10 CIVIL STATE OF CALIFORNIA

THE STATE OF CALIFORNIA OR ITS OFFICERS OR AGENTS SHALL NOT BE RESPONSIBLE FOR THE ACCURACY OR COMPLETENESS OF SCANNED COPIES OF THIS PLAN SHEET.

NOTE:

FOR ACCURATE RIGHT OF WAY DATA, CONTACT RIGHT OF WAY ENGINEERING AT THE DISTRICT OFFICE.

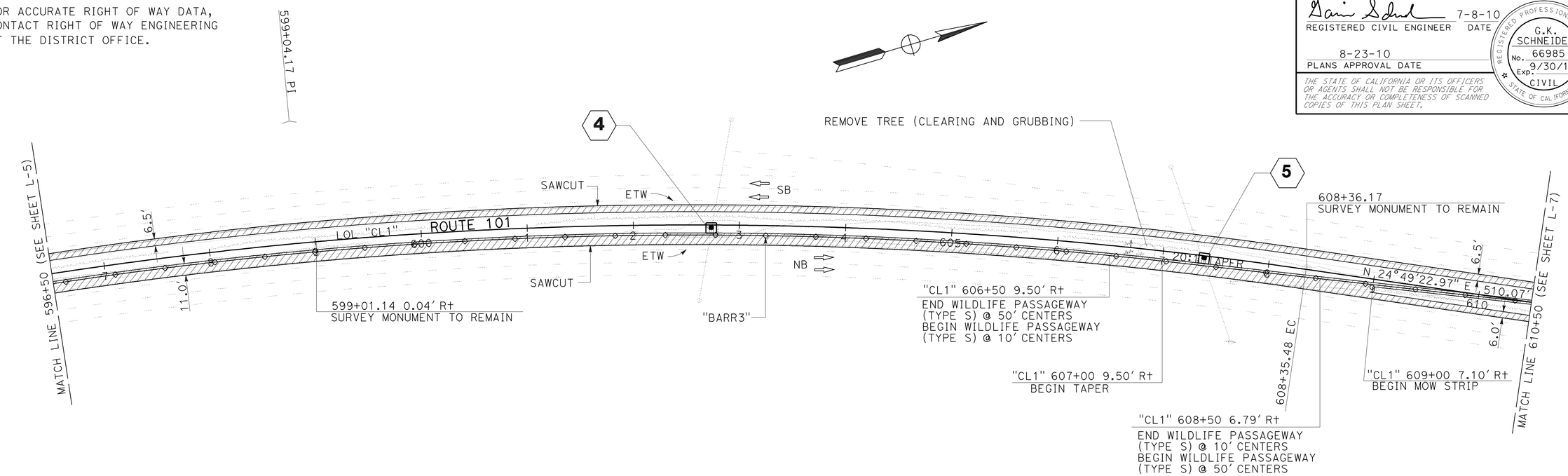

SCALE: 1" = 50'

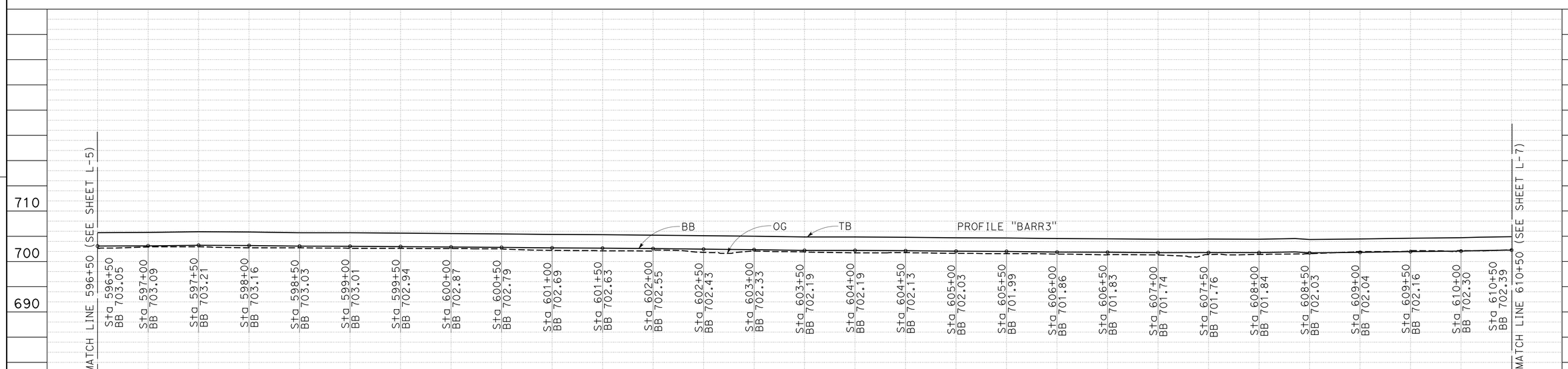

SCALE: Horiz 1" = 50'
Vert 1" = 5'

LAYOUT L-6

STATE OF CALIFORNIA - DEPARTMENT OF TRANSPORTATION

Caltrans

DESIGN

FUNCTIONAL SUPERVISOR: S. WYATT

CALCULATED-DESIGNED BY: G.K. SCHNEIDER

CHECKED BY: M. O'NEAL

REVISED BY

DATE REVISED

LAST REVISION DATE PLOTTED => 25-AUG-2010
TIME PLOTTED => 13:28

07-08-10

BORDER LAST REVISED 7/2/2010

USERNAME => trphils
DGN FILE => 05000003211ea006.dgn

RELATIVE BORDER SCALE IS IN INCHES 0 1 2 3

UNIT 1450

PROJECT NUMBER & PHASE 05000003211

Dist	COUNTY	ROUTE	POST MILES TOTAL PROJECT	SHEET No.	TOTAL SHEETS
05	SLO	101	55.8/57.9	13	65

REGISTERED CIVIL ENGINEER 7-8-10 DATE

8-23-10
PLANS APPROVAL DATE

REGISTERED PROFESSIONAL ENGINEER G.K. SCHNEIDER No. 66985 Exp. 9/30/10 CIVIL STATE OF CALIFORNIA

THE STATE OF CALIFORNIA OR ITS OFFICERS OR AGENTS SHALL NOT BE RESPONSIBLE FOR THE ACCURACY OR COMPLETENESS OF SCANNED COPIES OF THIS PLAN SHEET.

NOTE:

FOR ACCURATE RIGHT OF WAY DATA, CONTACT RIGHT OF WAY ENGINEERING AT THE DISTRICT OFFICE.

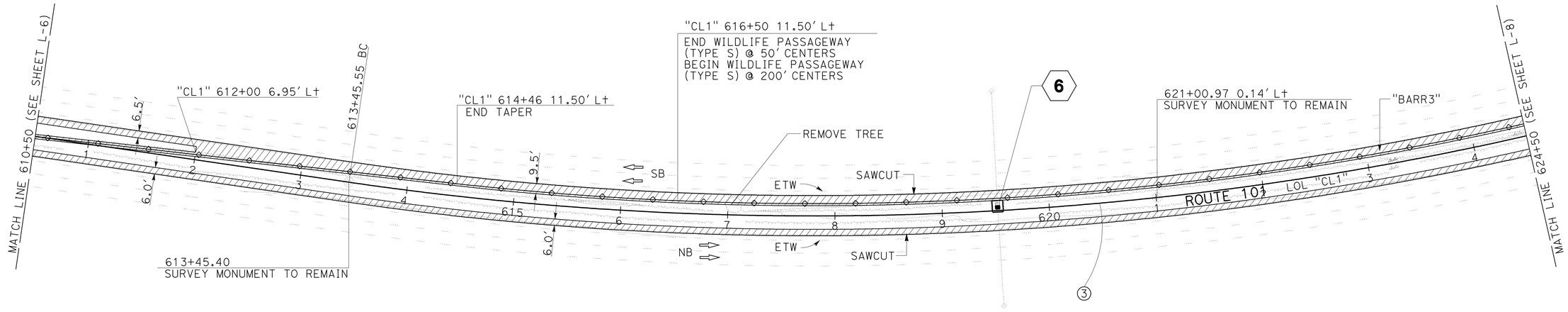

CURVE DATA

No.	R	Δ	T	L
3	3000.00'	-48°4'38"	1338.12'	2517.33'

SCALE: 1" = 50'

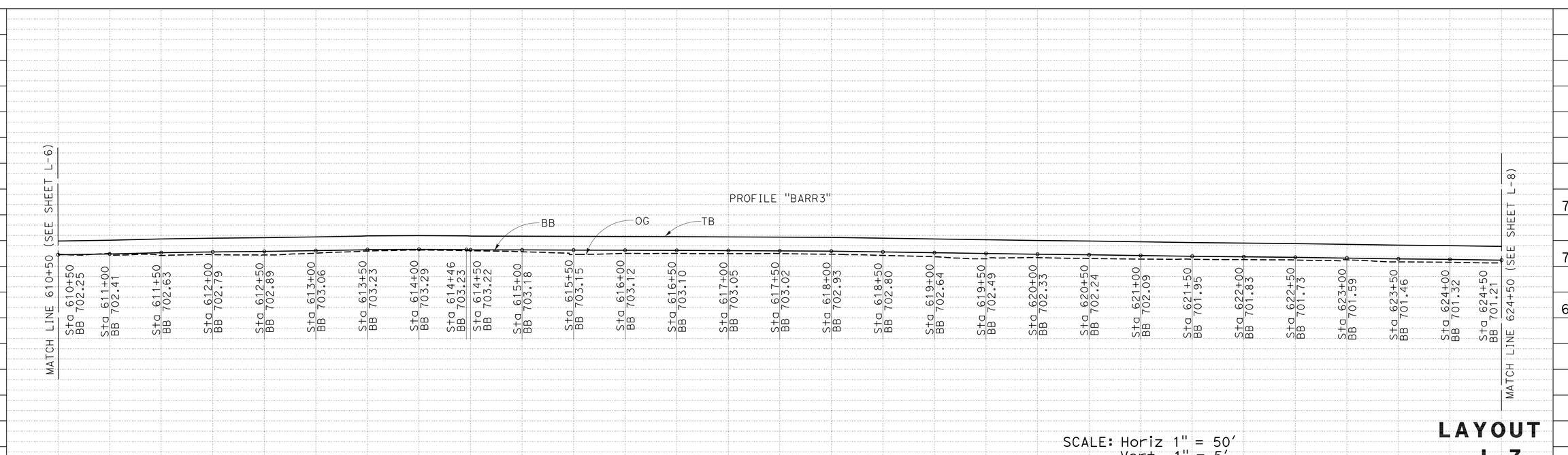

SCALE: Horiz 1" = 50'
Vert 1" = 5'

LAYOUT L-7

REVISED BY	
DATE REVISED	
CALCULATED-DESIGNED BY	G.K. SCHNEIDER
CHECKED BY	M. O'NEAL
FUNCTIONAL SUPERVISOR	S. WYATT

STATE OF CALIFORNIA - DEPARTMENT OF TRANSPORTATION

Caltrans®

DESIGN

LAST REVISION 07-08-10

DATE PLOTTED => 25-AUG-2010
TIME PLOTTED => 13:28

Dist	COUNTY	ROUTE	POST MILES TOTAL PROJECT	SHEET No.	TOTAL SHEETS
05	SLO	101	55.8/57.9	14	65

REGISTERED CIVIL ENGINEER 7-8-10 DATE

8-23-10
PLANS APPROVAL DATE

REGISTERED PROFESSIONAL ENGINEER G.K. SCHNEIDER No. 66985 Exp. 9/30/10 CIVIL STATE OF CALIFORNIA

THE STATE OF CALIFORNIA OR ITS OFFICERS OR AGENTS SHALL NOT BE RESPONSIBLE FOR THE ACCURACY OR COMPLETENESS OF SCANNED COPIES OF THIS PLAN SHEET.

NOTE:

FOR ACCURATE RIGHT OF WAY DATA, CONTACT RIGHT OF WAY ENGINEERING AT THE DISTRICT OFFICE.

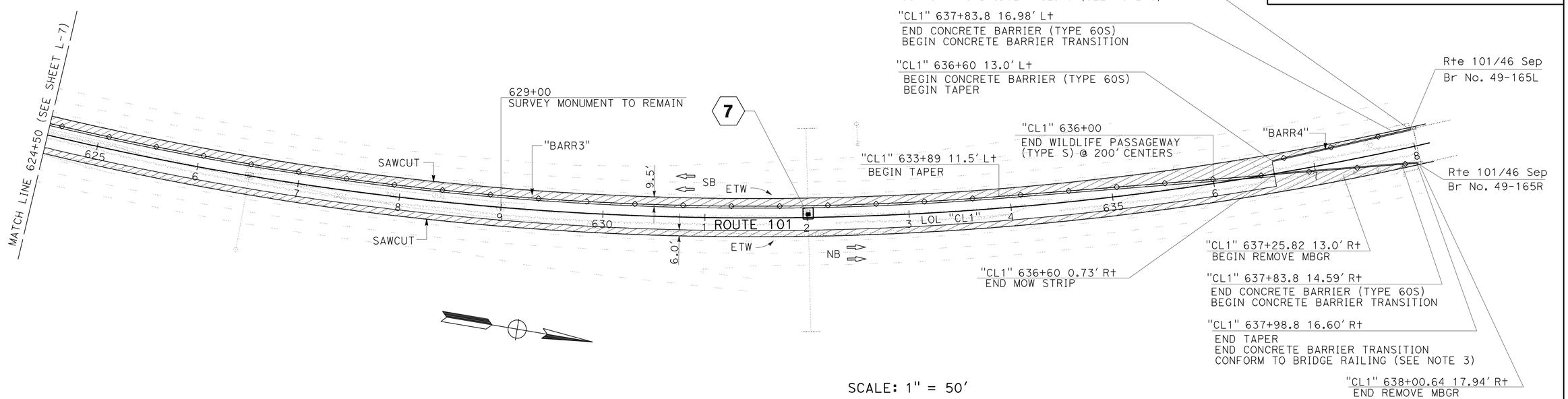

SCALE: 1" = 50'

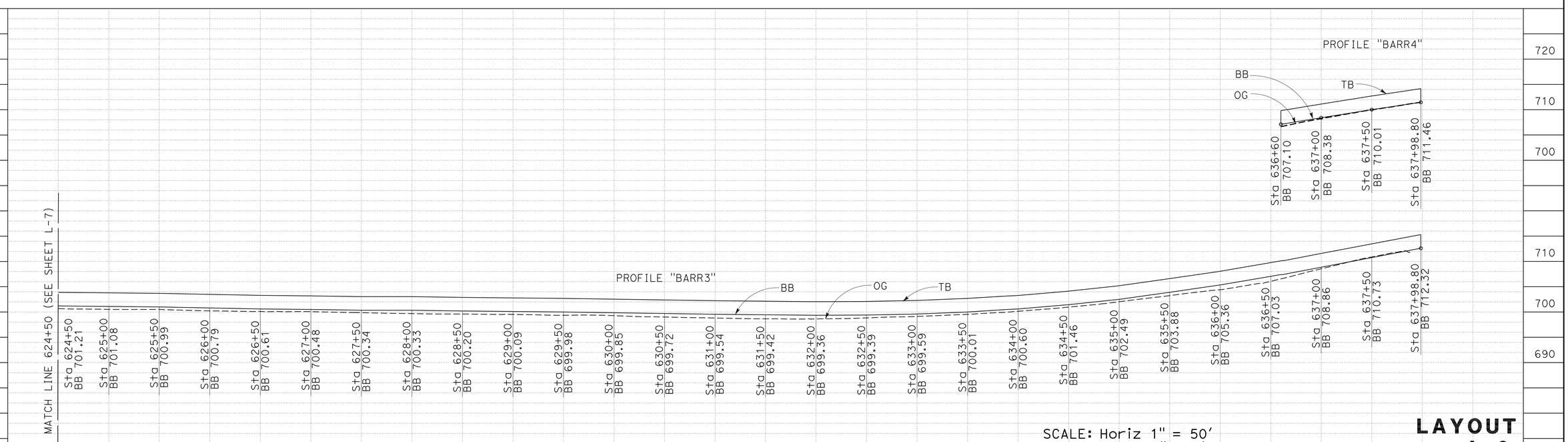

SCALE: Horiz 1" = 50'
Vert 1" = 5'

LAYOUT L-8

STATE OF CALIFORNIA - DEPARTMENT OF TRANSPORTATION
Caltrans
DESIGN

FUNCTIONAL SUPERVISOR: S. WYATT
CALCULATED-DESIGNED BY: G.K. SCHNEIDER
CHECKED BY: M. O'NEAL
REVISED BY
DATE REVISED

LAST REVISION 07-08-10
DATE PLOTTED => 25-AUG-2010
TIME PLOTTED => 13:28

Dist	COUNTY	ROUTE	POST MILES TOTAL PROJECT	SHEET No.	TOTAL SHEETS
05	SLO	101	55.8/57.9	15	65

LICENSED LANDSCAPE ARCHITECT

8-23-10
PLANS APPROVAL DATE

LICENSED LANDSCAPE ARCHITECT
Patrick K. Bolger
Signature
11-30-2010
Renewal Date
7-8-10
Date
STATE OF CALIFORNIA

THE STATE OF CALIFORNIA OR ITS OFFICERS OR AGENTS SHALL NOT BE RESPONSIBLE FOR THE ACCURACY OR COMPLETENESS OF SCANNED COPIES OF THIS PLAN SHEET.

NOTES:

1. ALL EXPOSED SURFACES OF TYPE 60S BARRIER TO HAVE RANDOM STONE ARCHITECTURAL TREATMENT APPLIED.
2. SIMULATED JOINTS SHALL VARY IN WIDTH AND DEPTH.

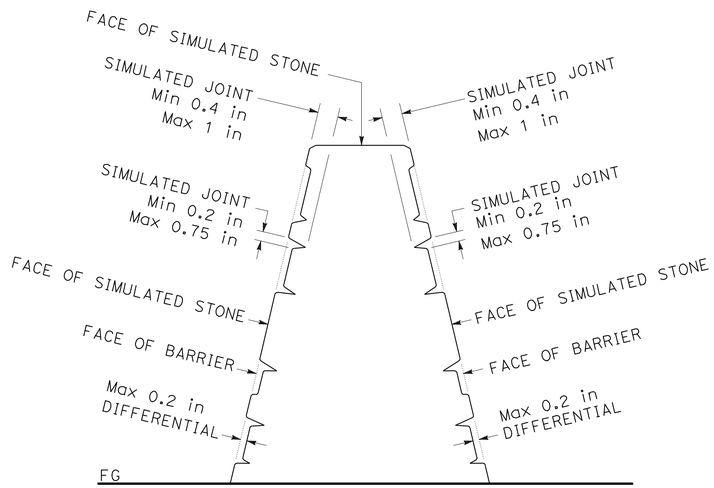

TYPICAL SECTION

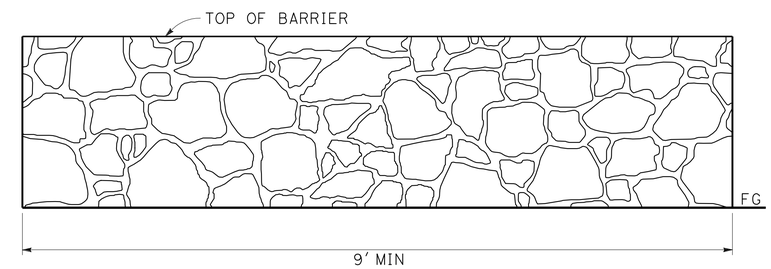

REPEATING PATTERN

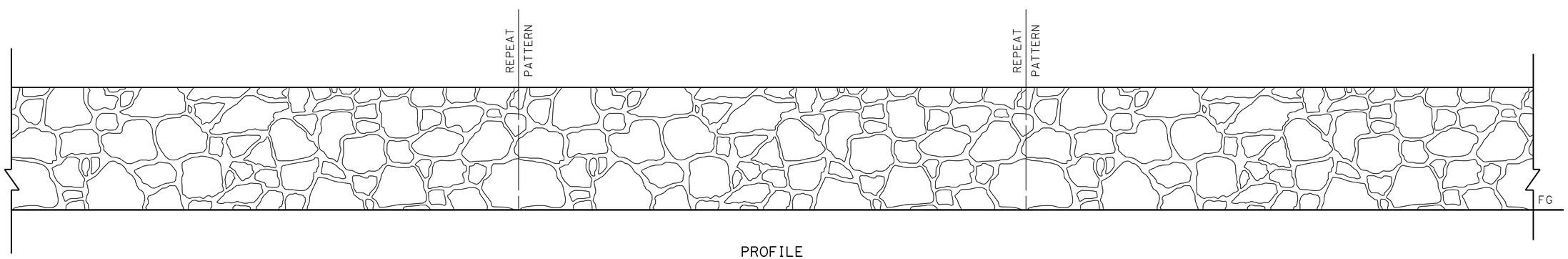

PROFILE

ARCHITECTURAL TREATMENT
CONCRETE BARRIER (TYPE 60S)

CONSTRUCTION DETAILS
NO SCALE
C-1

STATE OF CALIFORNIA - DEPARTMENT OF TRANSPORTATION
Caltrans® LANDSCAPE ARCHITECTURE

SENIOR LANDSCAPE ARCHITECT: DENNIS REEVES
CALCULATED-DESIGNED BY: PATRICK BOLGER
CHECKED BY: DAVID EMERSON
REVISED BY
DATE REVISED

LAST REVISION 07-08-10 | DATE PLOTTED => 25-AUG-2010 | TIME PLOTTED => 13:28

DIST	COUNTY	ROUTE	POST MILES TOTAL PROJECT	SHEET No	TOTAL SHEETS
05	SLO	101	55.8/57.9	16	65

Richard Melko 03-11-10
REGISTERED CIVIL ENGINEER DATE

8-23-10
PLANS APPROVAL DATE

REGISTERED PROFESSIONAL ENGINEER Richard Melko No. 61617 Exp. 06-30-11 CIVIL STATE OF CALIFORNIA

The State of California or its officers or agents shall not be responsible for the accuracy or completeness of electronic copies of this plan sheet.

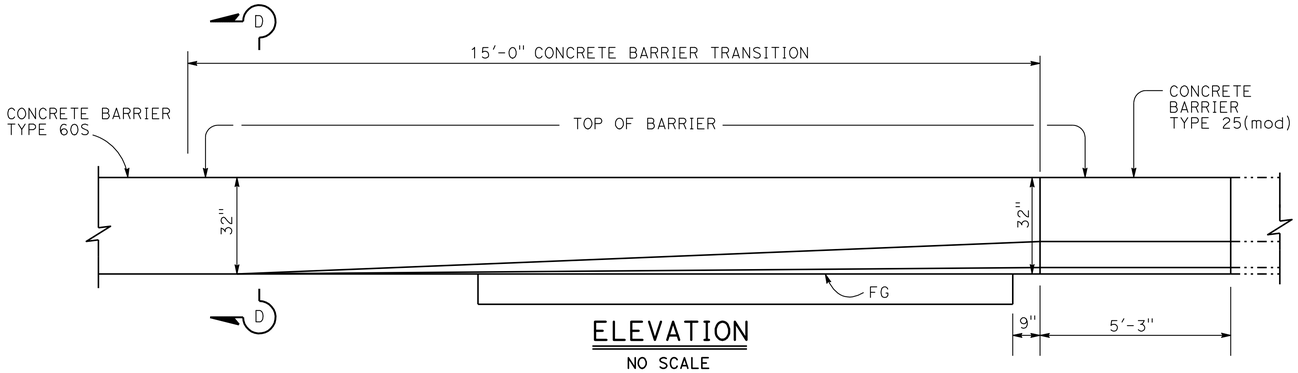

ELEVATION
NO SCALE

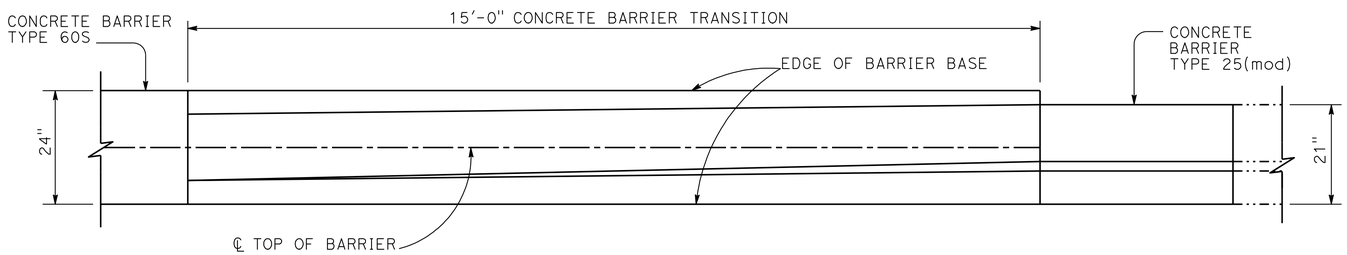

PLAN
NO SCALE

TRANSITION CONCRETE BARRIER TYPE 60S TO CONCRETE BARRIER TYPE 25(mod)

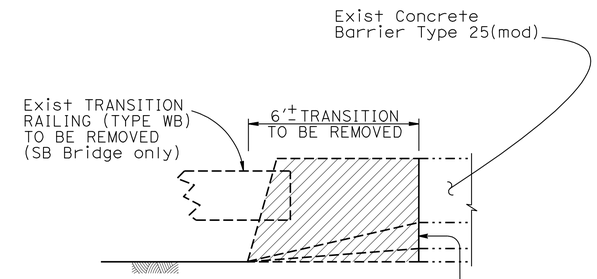

ELEVATION
NO SCALE

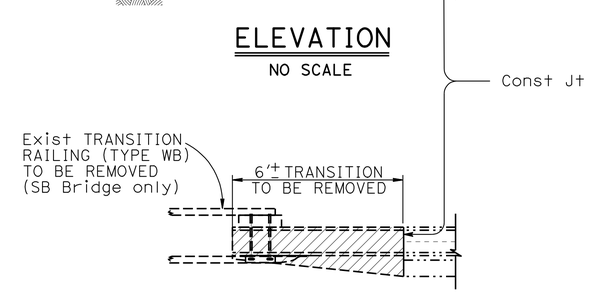

PLAN
NO SCALE

Barrier Removal
(Existing horizontal reinf to remain)

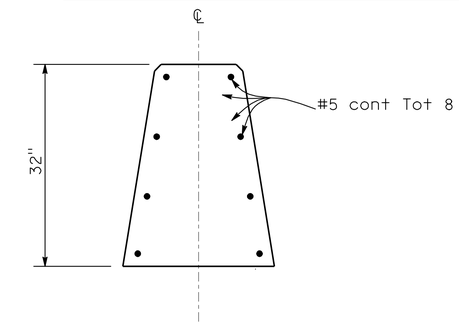

SECTION D-D
NO SCALE

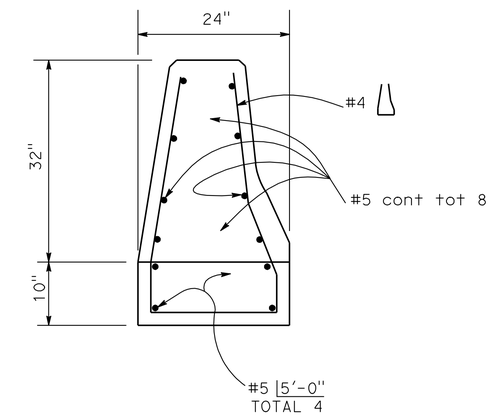

SECTION C-C
NO SCALE

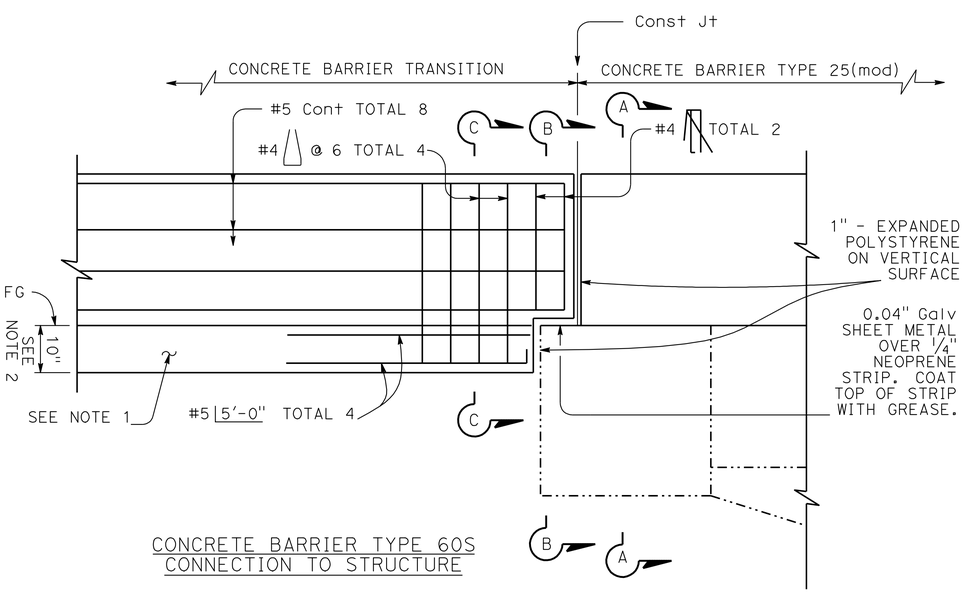

CONCRETE BARRIER TYPE 60S
CONNECTION TO STRUCTURE

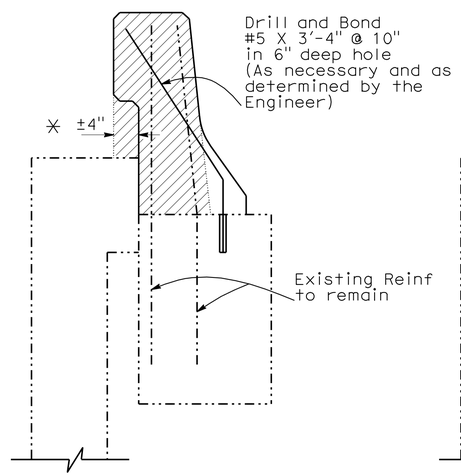

SECTION A-A
NO SCALE

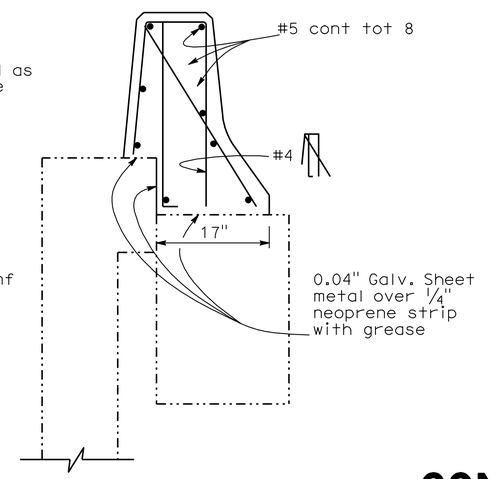

SECTION B-B
NO SCALE

Concrete Removal

✳ 4" in leiu of 6" shown on standard Plan B11-53. All other dimensions as per Standard Plan.

CONSTRUCTION DETAILS

C-2

NOTES:

1. Footing monolithic or doweled with 2-#8 x 8" @ 2'-0".
2. 10" Concrete barrier footing extends 10' back from structure.
3. For details not shown see Standard Plan B11-53, A76G and A76H

DESIGN	BY Richard Melko	CHECKED Fritz Hoffman	
DETAILS	BY Kamal Chonkria	CHECKED Fritz Hoffman	
QUANTITIES	BY	CHECKED	

STATE OF CALIFORNIA
DEPARTMENT OF TRANSPORTATION

DIVISION OF ENGINEERING SERVICES
STRUCTURE DESIGN
DESIGN BRANCH 6

BRIDGE NO. 49-0149R/L
POST MILE 55.7

SOUTH PASO ROBLES OVERHEAD
BARRIER TRANSITION DETAIL

STRUCTURES DESIGN DETAIL SHEET (ENGLISH) (REV. 10/25/05)

ORIGINAL SCALE IN INCHES FOR REDUCED PLANS 0 1 2 3

CU 05
EA 0Q6401

DISREGARD PRINTS BEARING EARLIER REVISION DATES

REVISION DATES: 03-11-10

SHEET 1 OF 1

FILE => 49-0149rl-a-br.dgn

USERNAME => frrichf DATE PLOTTED => 25-AUG-2010 TIME PLOTTED => 13:13

DIST	COUNTY	ROUTE	POST MILES TOTAL PROJECT	SHEET No	TOTAL SHEETS
05	SLO	101	55.8/57.9	17	65

Richard Melko 03-11-10
REGISTERED CIVIL ENGINEER DATE

8-23-10
PLANS APPROVAL DATE

REGISTERED PROFESSIONAL ENGINEER Richard Melko No. 61617 Exp. 06-30-11 CIVIL STATE OF CALIFORNIA

The State of California or its officers or agents shall not be responsible for the accuracy or completeness of electronic copies of this plan sheet.

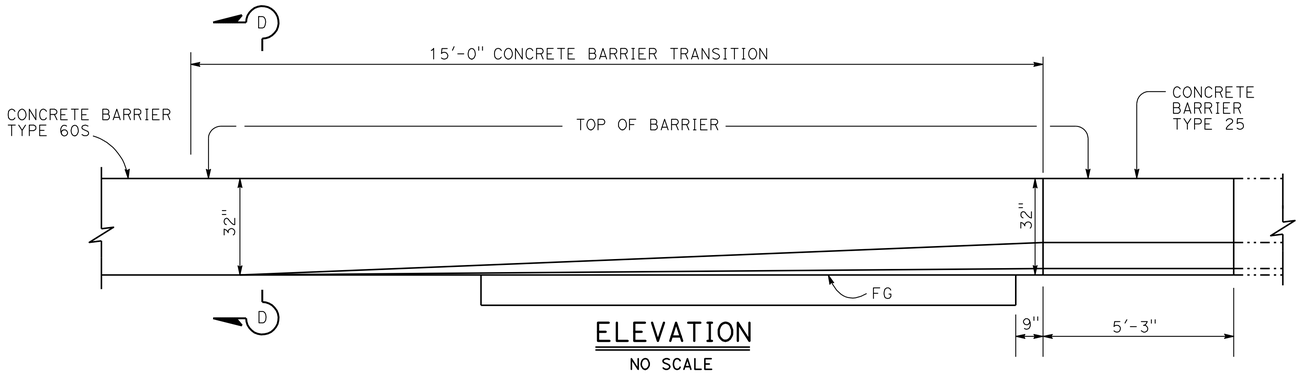

ELEVATION
NO SCALE

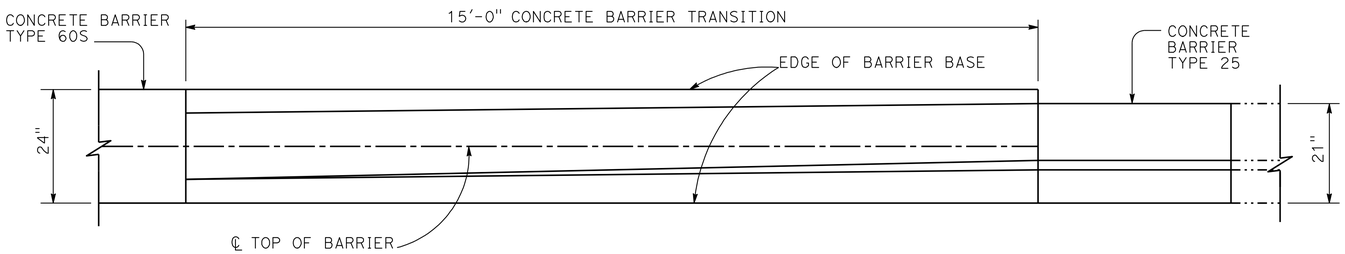

PLAN
NO SCALE

TRANSITION CONCRETE BARRIER TYPE 60S TO CONCRETE BARRIER TYPE 25

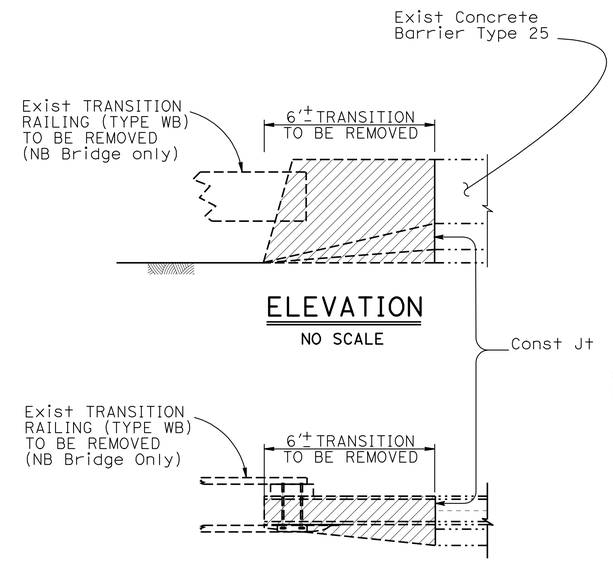

ELEVATION
NO SCALE

PLAN
NO SCALE

Barrier Removal
(Existing horizontal reinf to remain)

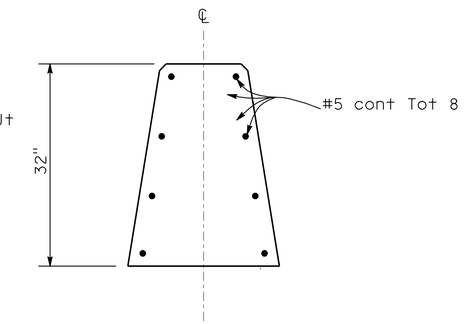

SECTION D-D
NO SCALE

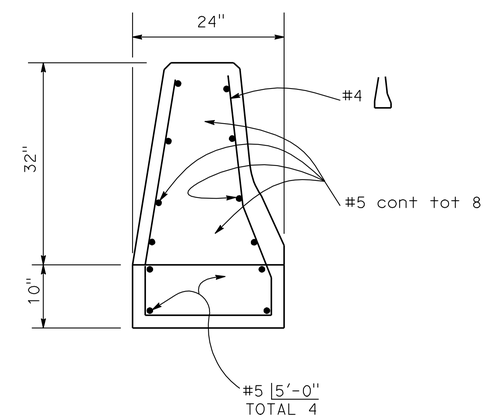

SECTION C-C
NO SCALE

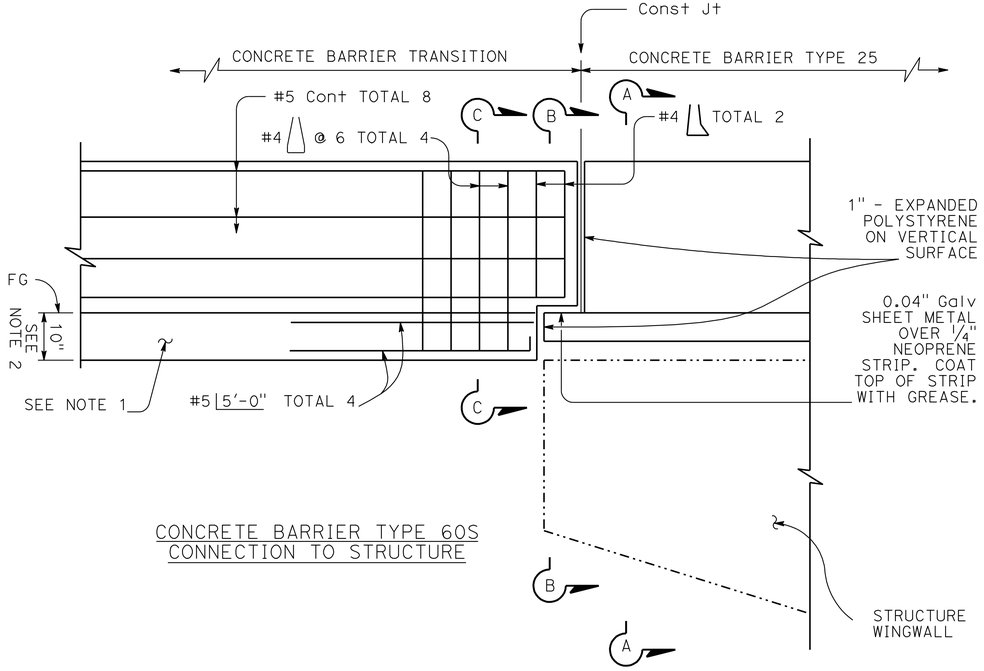

CONCRETE BARRIER TYPE 60S
CONNECTION TO STRUCTURE

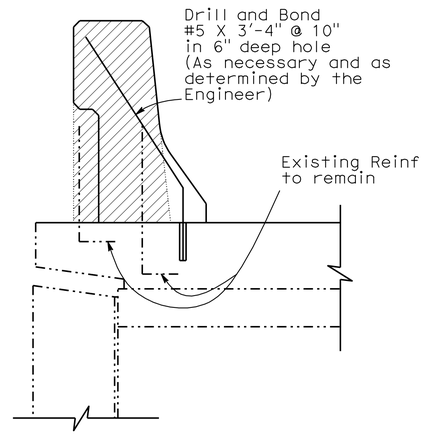

SECTION A-A
NO SCALE

Concrete Removal

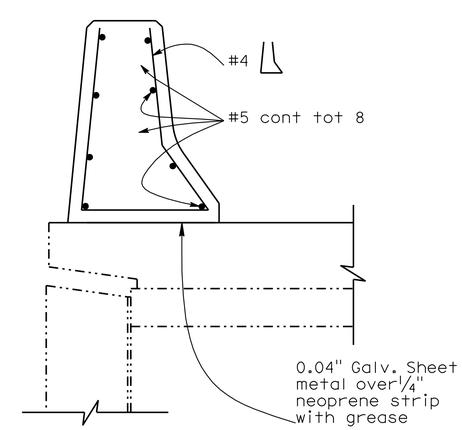

SECTION B-B
NO SCALE

CONSTRUCTION DETAILS

C-3

NOTES:

1. Footing monolithic or doweled with 2-#8 x 8" @ 2'-0".
2. 10" Concrete barrier footing extends 10' back from structure.
3. For details not shown see Standard Plan B11-53, A76G and A76H

DESIGN	BY Richard Melko	CHECKED Fritz Hoffman	
DETAILS	BY Kamal Chonkria	CHECKED Fritz Hoffman	
QUANTITIES	BY	CHECKED	

STATE OF CALIFORNIA
DEPARTMENT OF TRANSPORTATION

DIVISION OF ENGINEERING SERVICES
STRUCTURE DESIGN
DESIGN BRANCH 6

BRIDGE NO. 49-0165R/L
POST MILE 57.91

ROUTE 101/46 SEPARATION
BARRIER TRANSITION DETAIL

STRUCTURES DESIGN DETAIL SHEET (ENGLISH) (REV. 10/25/05)

ORIGINAL SCALE IN INCHES FOR REDUCED PLANS 0 1 2 3

CU 05
EA 0Q6401

DISREGARD PRINTS BEARING EARLIER REVISION DATES 03-11-10

REVISION DATES

SHEET 1 OF 1

FILE => 49-0165rl-a-br.dgn

USERNAME => trrichf DATE PLOTTED => 25-AUG-2010 TIME PLOTTED => 13:20

Dist	COUNTY	ROUTE	POST MILES TOTAL PROJECT	SHEET No.	TOTAL SHEETS
05	SLO	101	55.8/57.9	18	65

7-8-10
REGISTERED CIVIL ENGINEER DATE

8-23-10
PLANS APPROVAL DATE

REGISTERED PROFESSIONAL ENGINEER G.K. SCHNEIDER No. 66985 Exp. 9/30/10 CIVIL STATE OF CALIFORNIA

THE STATE OF CALIFORNIA OR ITS OFFICERS OR AGENTS SHALL NOT BE RESPONSIBLE FOR THE ACCURACY OR COMPLETENESS OF SCANNED COPIES OF THIS PLAN SHEET.

NOTES:

1. ALL STATION, OFFSETS, AND CORRESPONDING LEADER LINES ARE TO THE COB UNLESS OTHERWISE SHOWN.
2. ALL DRAINAGE STRUCTURES ARE RADIAL TO THE REFERENCED ALIGNMENT UNLESS OTHERWISE SHOWN.

LEGEND

- DRAINAGE SYSTEM No.
- DRAINAGE UNIT No.
- 0.5′ HMA (Misc AREA)

ABBREVIATIONS

COB - CENTER OF BOX

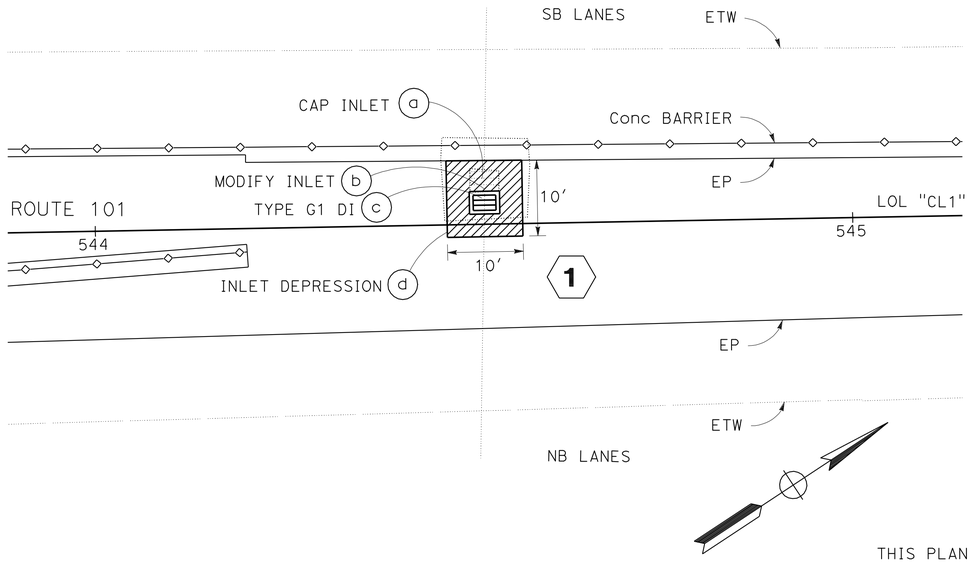

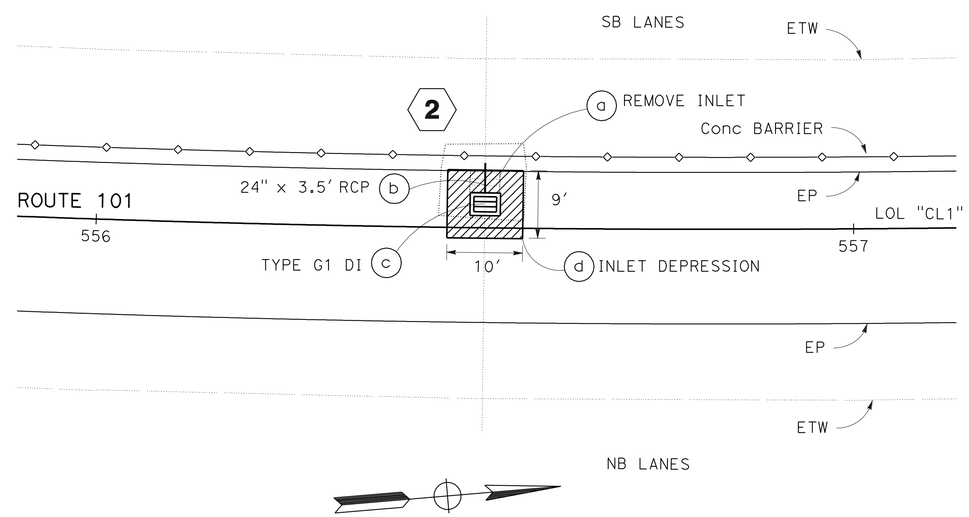

PLAN VIEW
SCALE: 1"=10′

THIS PLAN ACCURATE FOR DRAINAGE WORK ONLY.

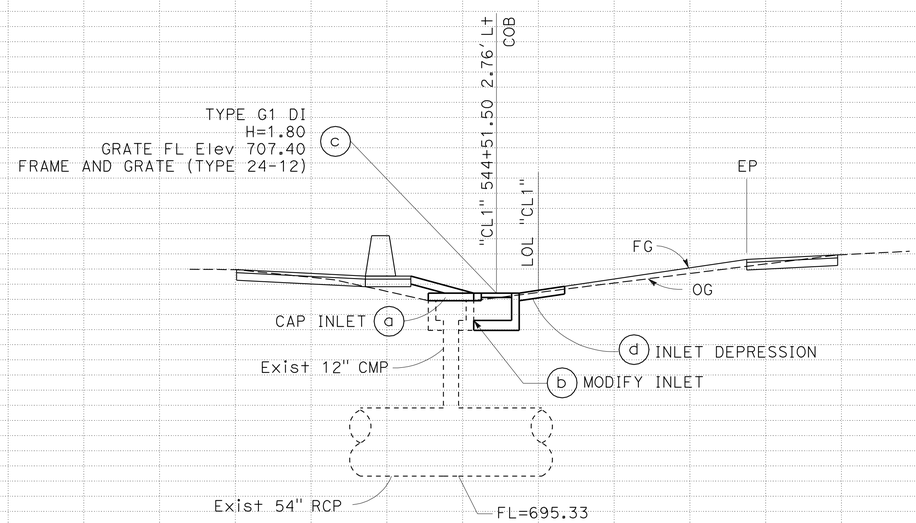

DRAINAGE SYSTEM No. 1

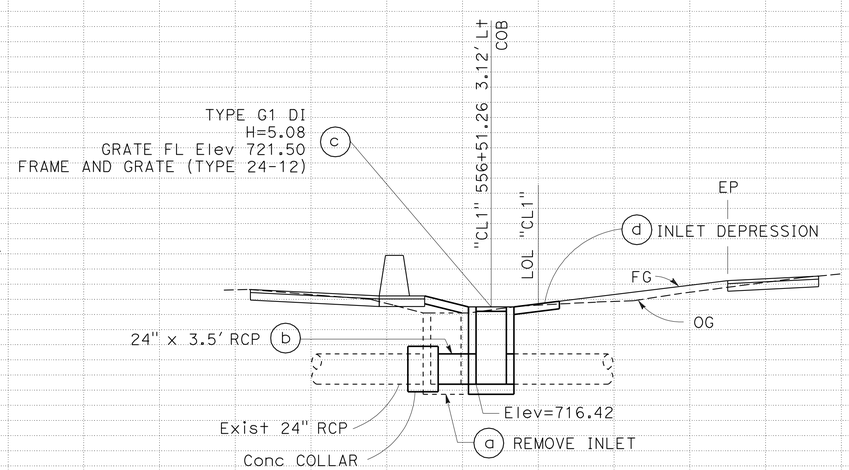

DRAINAGE SYSTEM No. 2

DRAINAGE PLAN AND PROFILE

SCALE: Horiz 1"=5′
Vert 1"=5′

D-1

STATION		TOTAL
CY	Exc	
	Emb	

STATE OF CALIFORNIA - DEPARTMENT OF TRANSPORTATION
Caltrans
DESIGN
FUNCTIONAL SUPERVISOR: S. WYATT
CALCULATED-DESIGNED BY: G.K. SCHNEIDER
CHECKED BY: M. O'NEAL
REVISED BY
DATE REVISED

LAST REVISION 07-08-10
DATE PLOTTED => 25-AUG-2010
TIME PLOTTED => 13:22

Dist	COUNTY	ROUTE	POST MILES TOTAL PROJECT	SHEET No.	TOTAL SHEETS
05	SLO	101	55.8/57.9	19	65

REGISTERED CIVIL ENGINEER 7-8-10 DATE

8-23-10
PLANS APPROVAL DATE

REGISTERED PROFESSIONAL ENGINEER G.K. SCHNEIDER No. 66985 Exp. 9/30/10 CIVIL STATE OF CALIFORNIA

THE STATE OF CALIFORNIA OR ITS OFFICERS OR AGENTS SHALL NOT BE RESPONSIBLE FOR THE ACCURACY OR COMPLETENESS OF SCANNED COPIES OF THIS PLAN SHEET.

NOTE:

FOR ACCURATE RIGHT OF WAY DATA, CONTACT RIGHT OF WAY ENGINEERING AT THE DISTRICT OFFICE.

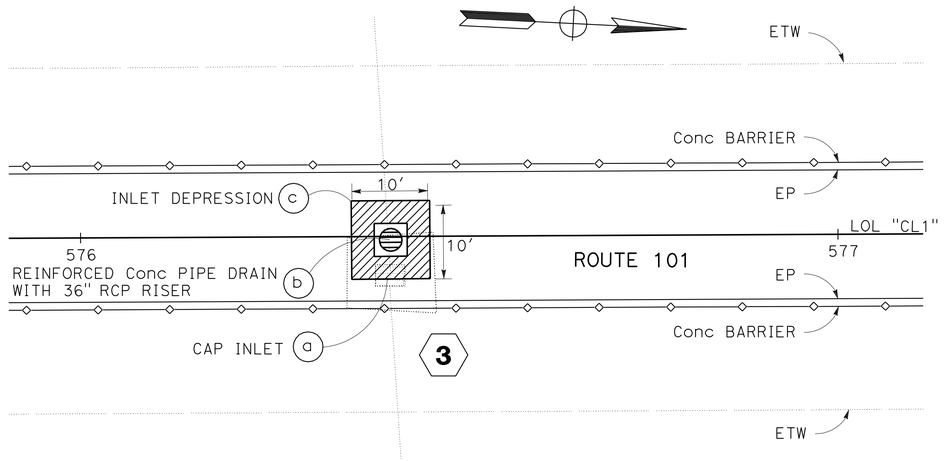

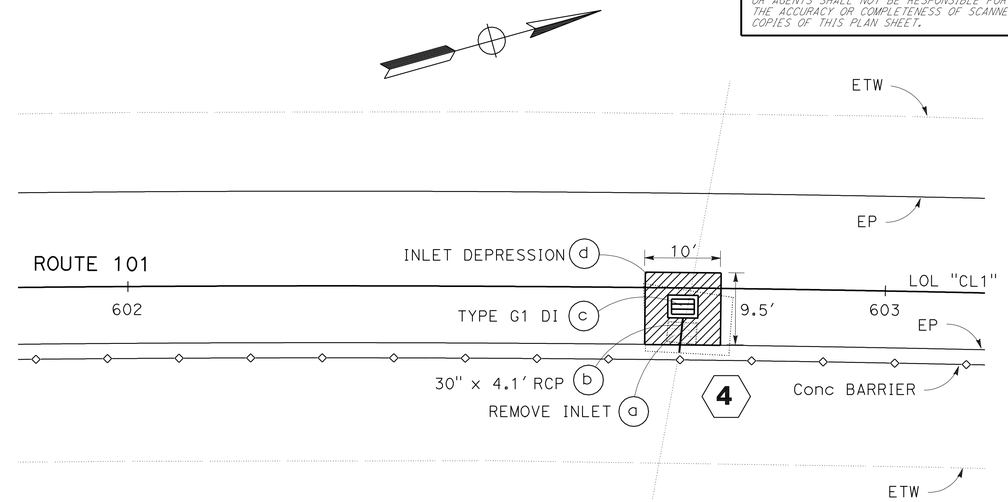

PLAN VIEW
SCALE: 1"=10'

THIS PLAN ACCURATE FOR DRAINAGE WORK ONLY.

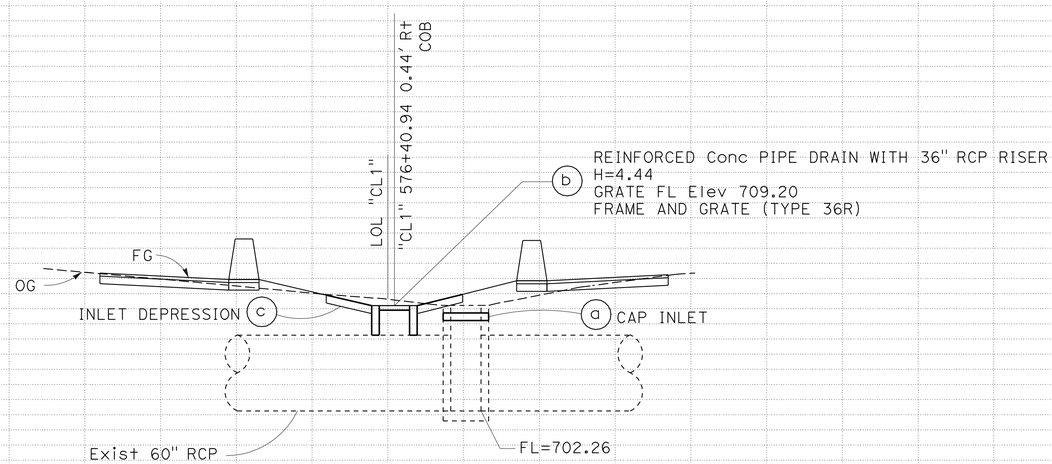

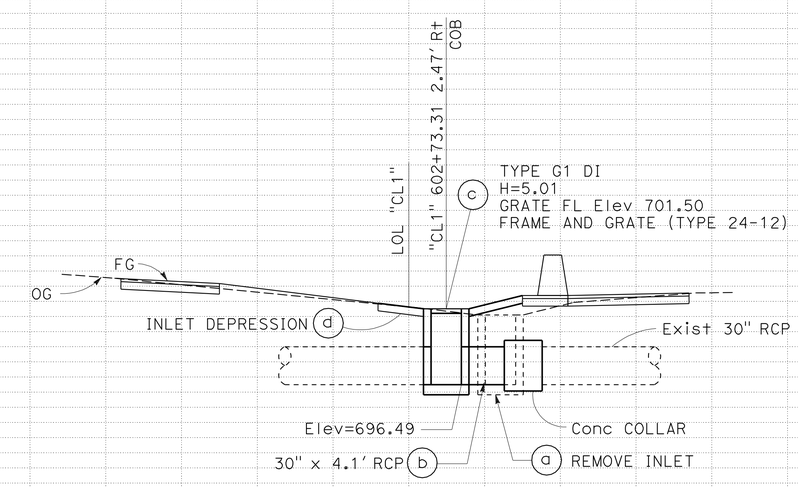

DRAINAGE PLAN AND PROFILE

DRAINAGE SYSTEM No. 3

DRAINAGE SYSTEM No. 4

SCALE: Horiz 1"=5'
Vert 1"=5'

D-2

STATION		TOTAL
CY	Exc	
	Emb	

STATE OF CALIFORNIA - DEPARTMENT OF TRANSPORTATION
Caltrans
DESIGN
FUNCTIONAL SUPERVISOR: S. WYATT
CALCULATED-DESIGNED BY: G.K. SCHNEIDER
CHECKED BY: M. O'NEAL
REVISED BY
DATE REVISED

LAST REVISION 07-08-10
DATE PLOTTED => 25-AUG-2010
TIME PLOTTED => 13:22

Dist	COUNTY	ROUTE	POST MILES TOTAL PROJECT	SHEET No.	TOTAL SHEETS
05	SLO	101	55.8/57.9	20	65

REGISTERED CIVIL ENGINEER 7-8-10 DATE

8-23-10
PLANS APPROVAL DATE

REGISTERED PROFESSIONAL ENGINEER G.K. SCHNEIDER No. 66985 Exp. 9/30/10 CIVIL STATE OF CALIFORNIA

THE STATE OF CALIFORNIA OR ITS OFFICERS OR AGENTS SHALL NOT BE RESPONSIBLE FOR THE ACCURACY OR COMPLETENESS OF SCANNED COPIES OF THIS PLAN SHEET.

NOTE:

FOR ACCURATE RIGHT OF WAY AND ACCESS DATA,
CONTACT RIGHT OF WAY ENGINEERING AT THE DISTRICT OFFICE.

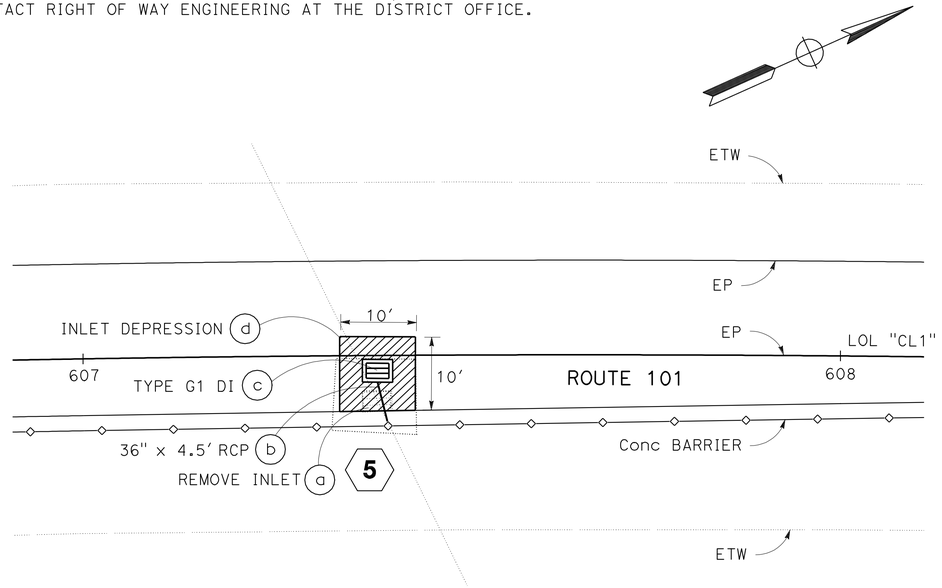

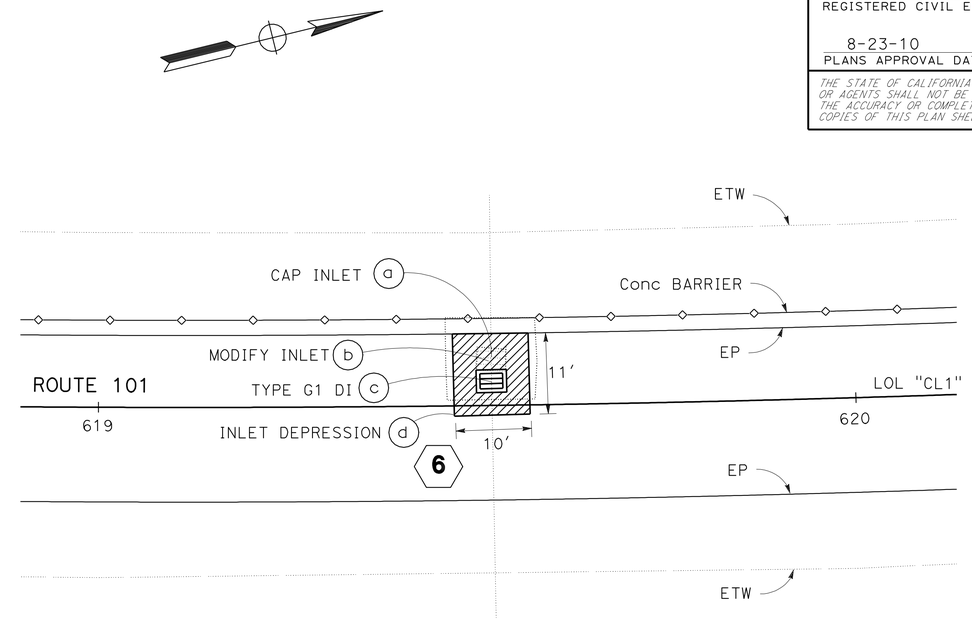

PLAN VIEW
SCALE: 1"=10'

THIS PLAN ACCURATE FOR DRAINAGE WORK ONLY.

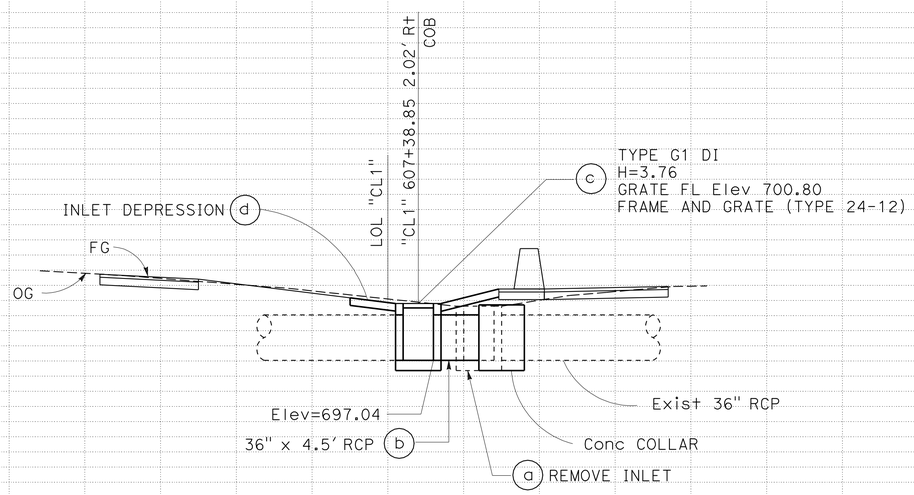

DRAINAGE SYSTEM No. 5

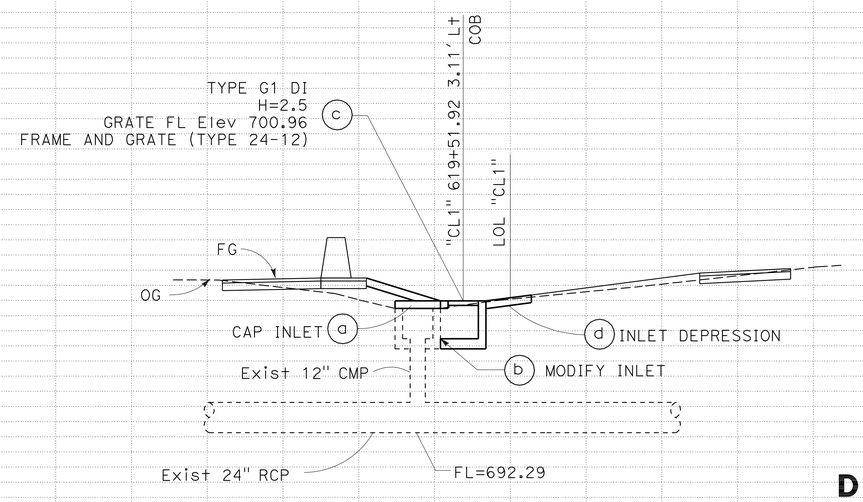

DRAINAGE SYSTEM No. 6

DRAINAGE PLAN AND PROFILE

SCALE: Horiz 1"=5'
Vert 1"=5'

D-3

STATION		TOTAL
CY	Exc	
	Emb	

STATE OF CALIFORNIA - DEPARTMENT OF TRANSPORTATION
Caltrans
DESIGN

FUNCTIONAL SUPERVISOR: S. WYATT
CALCULATED-DESIGNED BY: G.K. SCHNEIDER
CHECKED BY: M. O'NEAL
REVISED BY
DATE REVISED

LAST REVISION 07-08-10
DATE PLOTTED => 25-AUG-2010
TIME PLOTTED => 13:22

Dist	COUNTY	ROUTE	POST MILES TOTAL PROJECT	SHEET No.	TOTAL SHEETS
05	SLO	101	55.8/57.9	21	65

REGISTERED CIVIL ENGINEER 7-8-10 DATE

8-23-10
PLANS APPROVAL DATE

REGISTERED PROFESSIONAL ENGINEER G.K. SCHNEIDER No. 66985 Exp. 9/30/10 CIVIL STATE OF CALIFORNIA

THE STATE OF CALIFORNIA OR ITS OFFICERS OR AGENTS SHALL NOT BE RESPONSIBLE FOR THE ACCURACY OR COMPLETENESS OF SCANNED COPIES OF THIS PLAN SHEET.

NOTE:

FOR ACCURATE RIGHT OF WAY DATA, CONTACT RIGHT OF WAY ENGINEERING AT THE DISTRICT OFFICE.

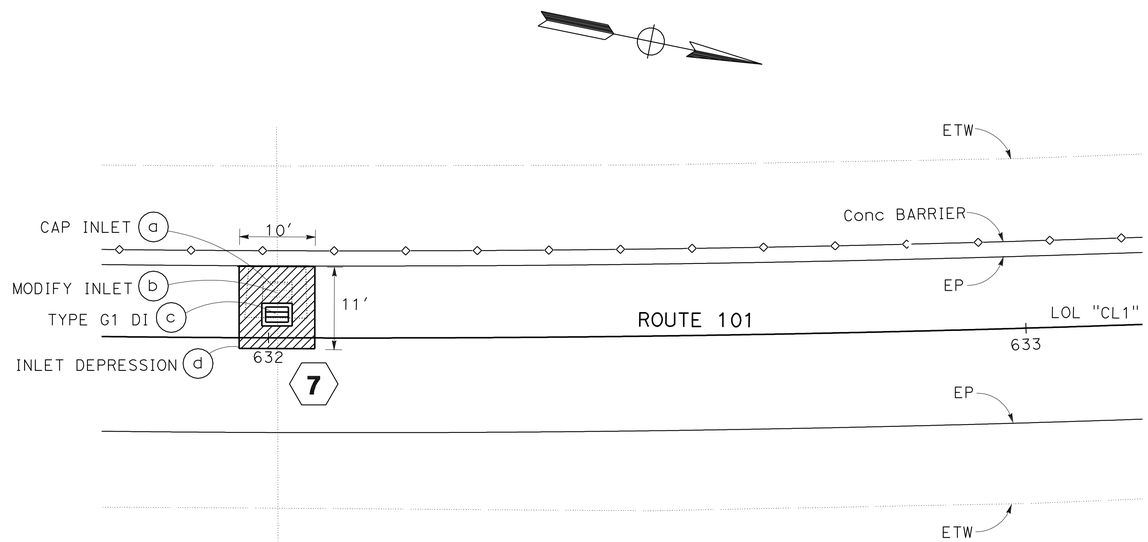

PLAN VIEW

SCALE: 1"=10'

THIS PLAN ACCURATE FOR DRAINAGE WORK ONLY.

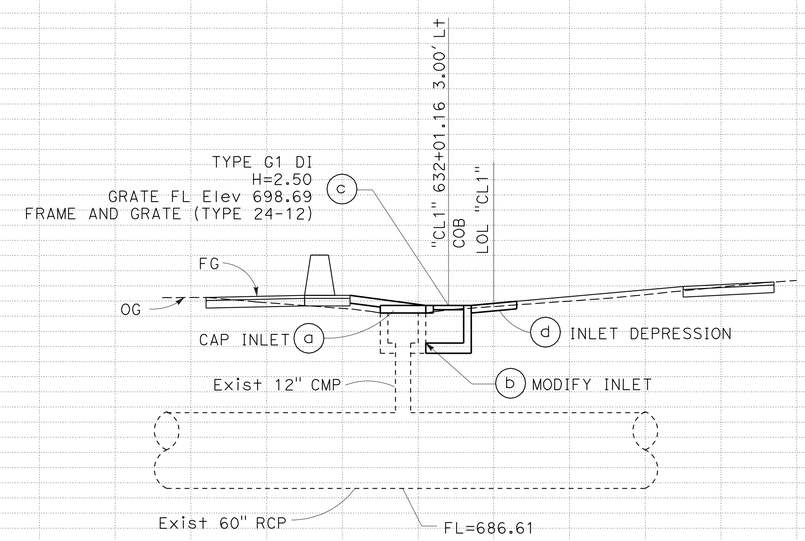

DRAINAGE SYSTEM No. 7

DRAINAGE PLAN AND PROFILE

SCALE: Horiz 1"=5'
Vert 1"=5'

D-4

STATION		TOTAL
CY	Exc	
	Emb	

STATE OF CALIFORNIA - DEPARTMENT OF TRANSPORTATION

Caltrans® DESIGN

FUNCTIONAL SUPERVISOR: S. WYATT

CALCULATED-DESIGNED BY: G.K. SCHNEIDER

CHECKED BY: M. O'NEAL

REVISED BY / DATE REVISED

LAST REVISION 07-08-10

DATE PLOTTED => 25-AUG-2010
TIME PLOTTED => 13:22

Dist	COUNTY	ROUTE	POST MILES TOTAL PROJECT	SHEET No.	TOTAL SHEETS
05	SLO	101	55.8/57.9	22	65

REGISTERED CIVIL ENGINEER 7-8-10 DATE

8-23-10
PLANS APPROVAL DATE

REGISTERED PROFESSIONAL ENGINEER G.K. SCHNEIDER No. 66985 Exp. 9/30/10 CIVIL STATE OF CALIFORNIA

THE STATE OF CALIFORNIA OR ITS OFFICERS OR AGENTS SHALL NOT BE RESPONSIBLE FOR THE ACCURACY OR COMPLETENESS OF SCANNED COPIES OF THIS PLAN SHEET.

NOTES:

1. USE CLASS 2 PCC FOR CONC CAP.
2. DRILL & BOND VERT DOWELS INTO EXISTING DI WALLS AT LOCATIONS SHOWN.
3. "Y" IS THE DI REMOVAL HEIGHT.

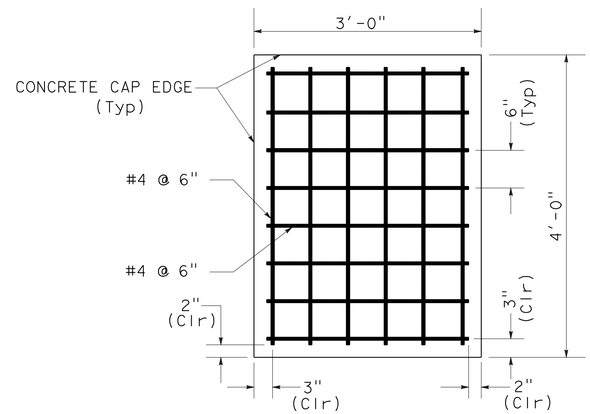

CONCRETE CAP REINFORCEMENT PLAN

TABLE C

DRAINAGE SYSTEM #	Y
1	0.0'
3	1.0'
6	0.0'
7	0.0'

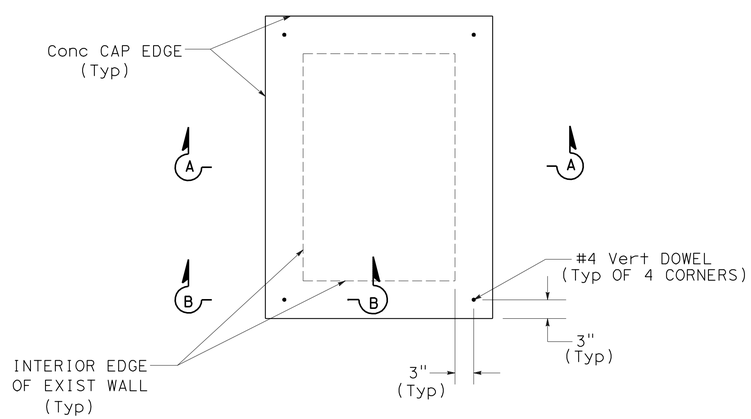

CAP INLET PLAN

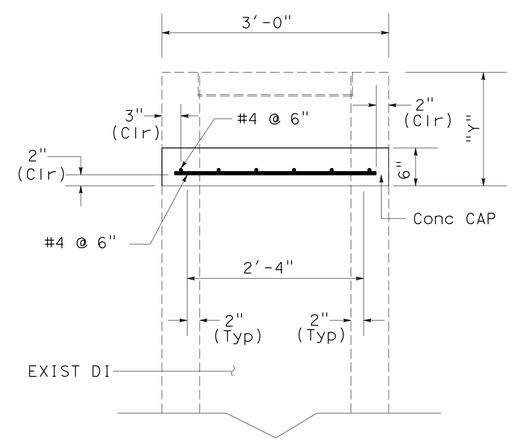

SECTION A-A

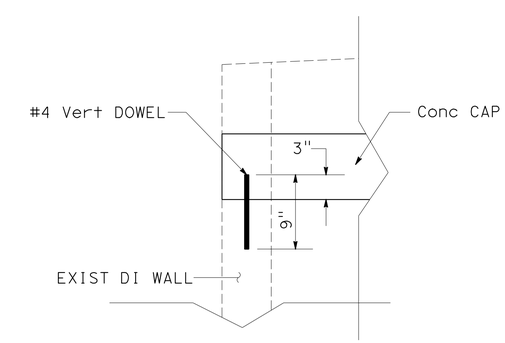

SECTION B-B

1 a 3 a 6 a 7 a

DRAINAGE DETAILS

NO SCALE

DD-1

STATE OF CALIFORNIA - DEPARTMENT OF TRANSPORTATION
Caltrans
DESIGN
FUNCTIONAL SUPERVISOR S. WYATT
CALCULATED-DESIGNED BY G.K. SCHNEIDER
CHECKED BY M. O'NEAL
REVISED BY
DATE REVISED

LAST REVISION 07-08-10
DATE PLOTTED => 25-AUG-2010
TIME PLOTTED => 13:22

Dist	COUNTY	ROUTE	POST MILES TOTAL PROJECT	SHEET No.	TOTAL SHEETS
05	SLO	101	55.8/57.9	23	65

REGISTERED CIVIL ENGINEER 7-8-10 DATE

8-23-10
PLANS APPROVAL DATE

REGISTERED PROFESSIONAL ENGINEER G.K. SCHNEIDER No. 66985 Exp. 9/30/10 CIVIL STATE OF CALIFORNIA

THE STATE OF CALIFORNIA OR ITS OFFICERS OR AGENTS SHALL NOT BE RESPONSIBLE FOR THE ACCURACY OR COMPLETENESS OF SCANNED COPIES OF THIS PLAN SHEET.

NOTE:

1. DRILL & BOND DOWELS INTO EXISTING DI WALLS AT LOCATIONS SHOWN.

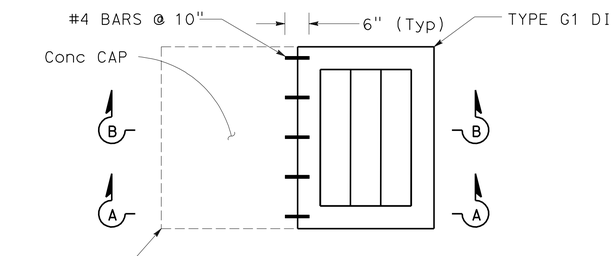

MODIFY INLET PLAN

1 D 6 D 7 D

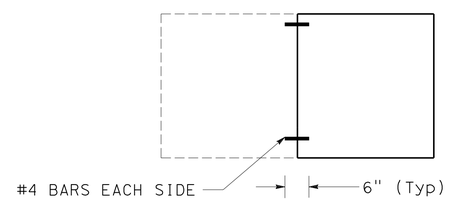

SECTION A-A

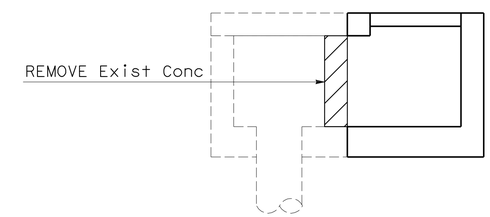

SECTION B-B

DRAINAGE DETAILS

NO SCALE

DD-2

STATE OF CALIFORNIA - DEPARTMENT OF TRANSPORTATION
Caltrans® DESIGN

FUNCTIONAL SUPERVISOR: S. WYATT
CALCULATED-DESIGNED BY: G.K. SCHNEIDER
CHECKED BY: M. O'NEAL
REVISED BY
DATE REVISED

LAST REVISION DATE PLOTTED => 25-AUG-2010
07-08-10 TIME PLOTTED => 13:22

Dist	COUNTY	ROUTE	POST MILES TOTAL PROJECT	SHEET No.	TOTAL SHEETS
05	SLO	101	55.8/57.9	24	65

REGISTERED CIVIL ENGINEER 7-8-10 DATE

8-23-10
PLANS APPROVAL DATE

REGISTERED PROFESSIONAL ENGINEER G.K. SCHNEIDER No. 66985 Exp. 9/30/10 CIVIL STATE OF CALIFORNIA

THE STATE OF CALIFORNIA OR ITS OFFICERS OR AGENTS SHALL NOT BE RESPONSIBLE FOR THE ACCURACY OR COMPLETENESS OF SCANNED COPIES OF THIS PLAN SHEET.

NOTES:

1. WHERE PIPES OF DIFFERENT DIAMETERS ARE JOINED WITH A Conc COLLAR, L & T SHALL CORRESPOND WITH THE LARGER OF THE TWO PIPE DIAMETERS.
2. JOIN PIPES AT INVERTS.

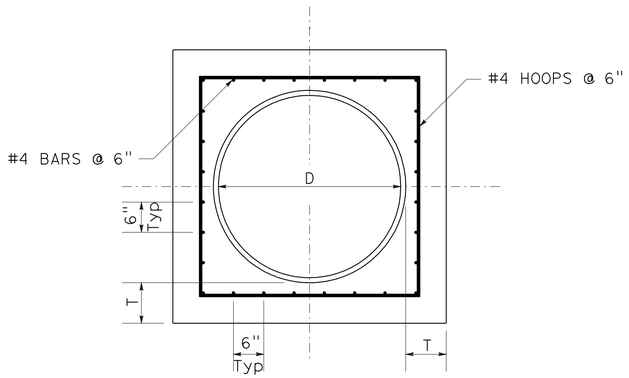

SECTION B-B

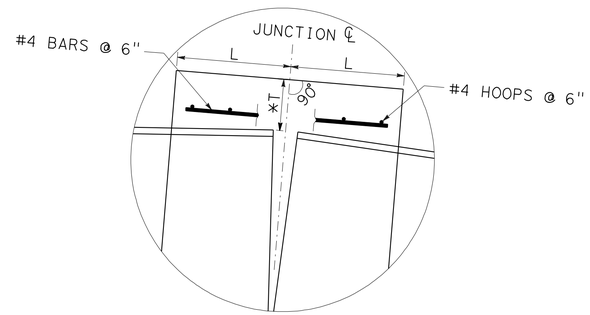

DETAIL C

*MEASURED ALONG JUNCTION ℄

TABLE A

D	L (Min)	T (Min)
2'-0"	1'-0"	6"
2'-6"	1'-3"	7"
3'-0"	1'-6"	8"

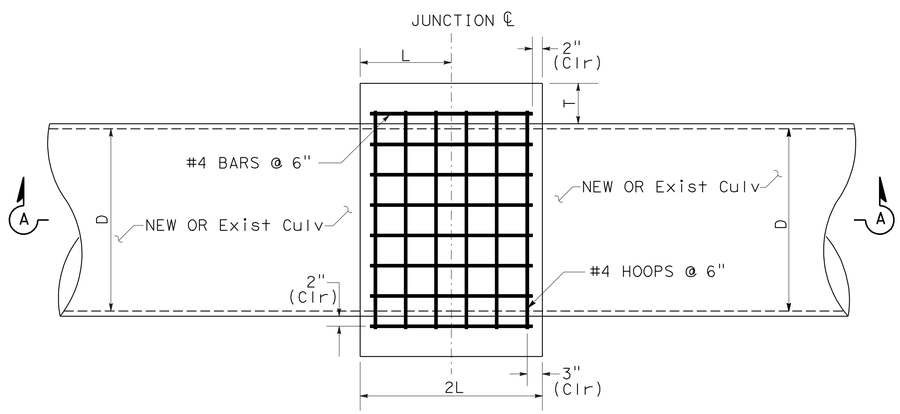

CONC COLLAR PLAN

2 4 5

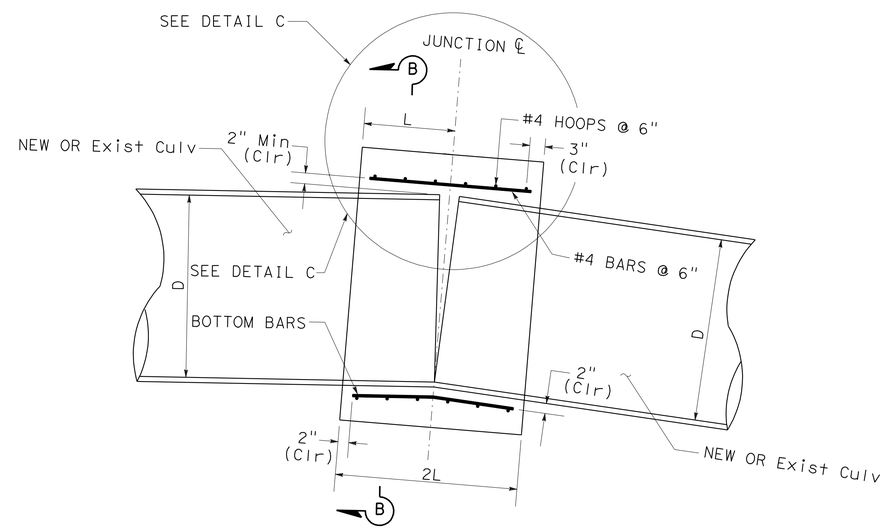

SECTION A-A

NOTE: BEND BOTTOM BARS AS NECESSARY TO MAINTAIN 2" CLEARANCE

DRAINAGE DETAILS

NO SCALE

DD-3

STATE OF CALIFORNIA - DEPARTMENT OF TRANSPORTATION
Caltrans®
DESIGN
FUNCTIONAL SUPERVISOR S. WYATT
CALCULATED-DESIGNED BY G.K. SCHNEIDER
CHECKED BY M. O'NEAL
REVISED BY
DATE REVISED

LAST REVISION 07-08-10
DATE PLOTTED => 25-AUG-2010
TIME PLOTTED => 13:22

Dist	COUNTY	ROUTE	POST MILES TOTAL PROJECT	SHEET No.	TOTAL SHEETS
05	SLO	101	55.8/57.9	25	65

REGISTERED CIVIL ENGINEER 7-8-10 DATE

8-23-10
PLANS APPROVAL DATE

REGISTERED PROFESSIONAL ENGINEER G.K. SCHNEIDER No. 66985 Exp. 9/30/10 CIVIL STATE OF CALIFORNIA

THE STATE OF CALIFORNIA OR ITS OFFICERS OR AGENTS SHALL NOT BE RESPONSIBLE FOR THE ACCURACY OR COMPLETENESS OF SCANNED COPIES OF THIS PLAN SHEET.

DRAINAGE QUANTITIES

DRAINAGE PLAN SHEET No.	DRAINAGE SYSTEM No. ⬡	DRAINAGE UNIT ○	REMOVE INLET	CAP INLET	MODIFY INLET	36" PRECAST Conc PIPE RISER	36" RCP	30" RCP	24" RCP	MINOR Conc (MINOR Str)	(N) HEIGHT OF INLET "H"	(N) FRAME AND GRATE (TYPE 24-12)	(N) FRAME AND GRATE (TYPE 36R)	Misc IRON & STEEL	PLACE HMA (Misc AREA)	HMA (TYPE A)	DESCRIPTION	LOCATION	DRAINAGE UNIT ○	DRAINAGE SYSTEM No. ⬡	DRAINAGE PLAN SHEET No.
			EA			LF				CY	LF	EA		LB	SQYD	TON					
D-1	1	a		1														"CL1" 544+51.50 2.76′ Lt	a	1	D-1
		b			1														b		
		c								0.95	1.80	1		326			TYPE G1-DI		c		
		d													9.8	3.3	INLET DEPRESSION		d		
D-1	2	a	1															"CL1" 556+51.26 3.12′ Lt	a	2	D-1
		b							3.5										b		
		c								1.41	5.08	1		326			TYPE G1-DI		c		
		d													8.7	2.9	INLET DEPRESSION		d		
D-2	3	a		1														"CL1" 576+40.94 0.44′ Rt	a	3	D-2
		b				4.4					4.4		1	236			36" RCP RISER		b		
		c													9	3.0	INLET DEPRESSION		c		
D-2	4	a	1															"CL1" 602+73.31 2.47′ Rt	a	4	D-2
		b						4.1											b		
		c								1.39	5.01	1		326			TYPE G1-DI		c		
		d													9.2	3.1	INLET DEPRESSION		d		
D-3	5	a	1															"CL1" 607+38.85 2.02′ Rt	a	5	D-3
		b					4.5												b		
		c								1.12	3.76	1		326			TYPE G1-DI		c		
		d													9.8	3.3	INLET DEPRESSION		d		
D-3	6	a		1														"CL1" 619+51.92 3.11 Lt	a	6	D-3
		b			1														b		
		c								0.95	2.50	1		326			TYPE G1-DI		c		
		d													10.9	3.7	INLET DEPRESSION		d		
D-4	7	a		1														"CL1" 632+01.16 3.15′ Lt	a	7	D-4
		b			1														b		
		c								0.95	2.50	1		326			TYPE G1-DI		c		
		d													10.9	3.7	INLET DEPRESSION		d		
TOTAL			3	4	3	4.4	4.5	4.1	3.5	6.77	25	6	1	2192	68.3	23					

(N) NOT A SEPARATE PAY ITEM, FOR INFORMATION ONLY

DRAINAGE QUANTITIES
DQ-1

STATE OF CALIFORNIA - DEPARTMENT OF TRANSPORTATION
Caltrans® DESIGN

FUNCTIONAL SUPERVISOR: S. WYATT
CALCULATED-DESIGNED BY: G.K. SCHNEIDER
CHECKED BY: M. O'NEAL
REVISED BY
DATE REVISED

LAST REVISION 07-08-10 | DATE PLOTTED => 30-AUG-2010 | TIME PLOTTED => 11:54

Dist	COUNTY	ROUTE	POST MILES TOTAL PROJECT	SHEET No.	TOTAL SHEETS
05	SLO	101	55.8/57.9	26	65

REGISTERED CIVIL ENGINEER 7-8-10 DATE

8-23-10
PLANS APPROVAL DATE

REGISTERED PROFESSIONAL ENGINEER G.K. SCHNEIDER No. 66985 Exp. 9/30/10 CIVIL STATE OF CALIFORNIA

THE STATE OF CALIFORNIA OR ITS OFFICERS OR AGENTS SHALL NOT BE RESPONSIBLE FOR THE ACCURACY OR COMPLETENESS OF SCANNED COPIES OF THIS PLAN SHEET.

NOTE:

LOCATIONS OF UTILITIES ARE APPROXIMATE.

LEGEND:

- Exist Over Head Electrical - PG&E
- Exist Electrical - PG&E
- Exist Gas - So Cal Gas Co
- Exist Water - City of El Paso De Robles
- Exist Sewer - City of El Paso De Robles
- Exist Telephone - AT&T
- LIMITS OF PAVING

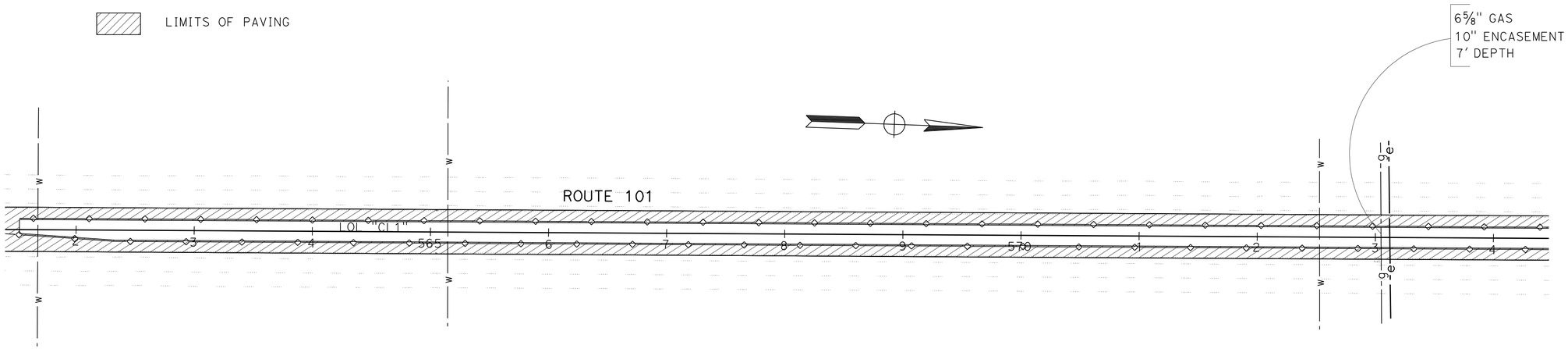

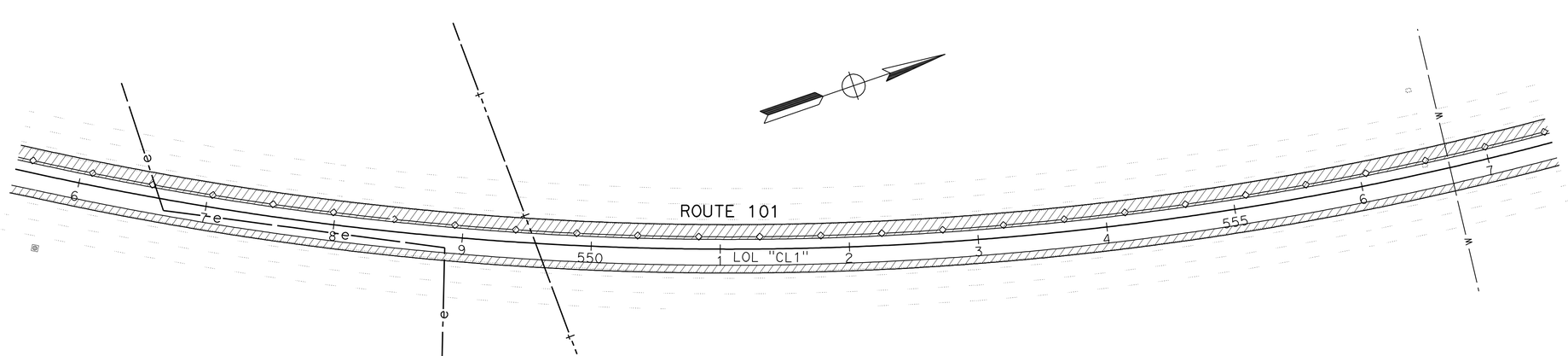

THIS PLAN ACCURATE FOR UTILITY WORK ONLY.

UTILITY PLAN

SCALE: 1" = 50'

U-1

STATE OF CALIFORNIA - DEPARTMENT OF TRANSPORTATION
Caltrans®
DESIGN

FUNCTIONAL SUPERVISOR: S. WYATT
CALCULATED-DESIGNED BY: G.K. SCHNEIDER
CHECKED BY: M. O'NEAL
REVISED BY
DATE REVISED

LAST REVISION 07-08-10 | DATE PLOTTED => 25-AUG-2010 | TIME PLOTTED => 14:27

Dist	COUNTY	ROUTE	POST MILES TOTAL PROJECT	SHEET No.	TOTAL SHEETS
05	SLO	101	55.8/57.9	27	65

REGISTERED CIVIL ENGINEER 7-8-10 DATE

8-23-10
PLANS APPROVAL DATE

REGISTERED PROFESSIONAL ENGINEER G.K. SCHNEIDER No. 66985 Exp. 9/30/10 CIVIL STATE OF CALIFORNIA

THE STATE OF CALIFORNIA OR ITS OFFICERS OR AGENTS SHALL NOT BE RESPONSIBLE FOR THE ACCURACY OR COMPLETENESS OF SCANNED COPIES OF THIS PLAN SHEET.

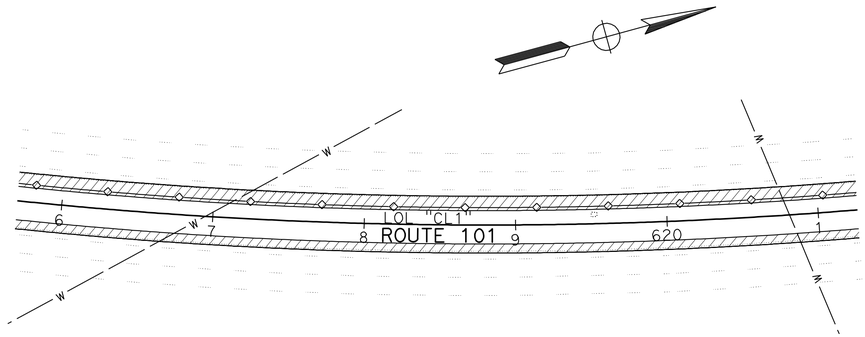

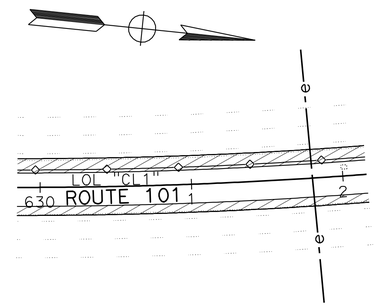

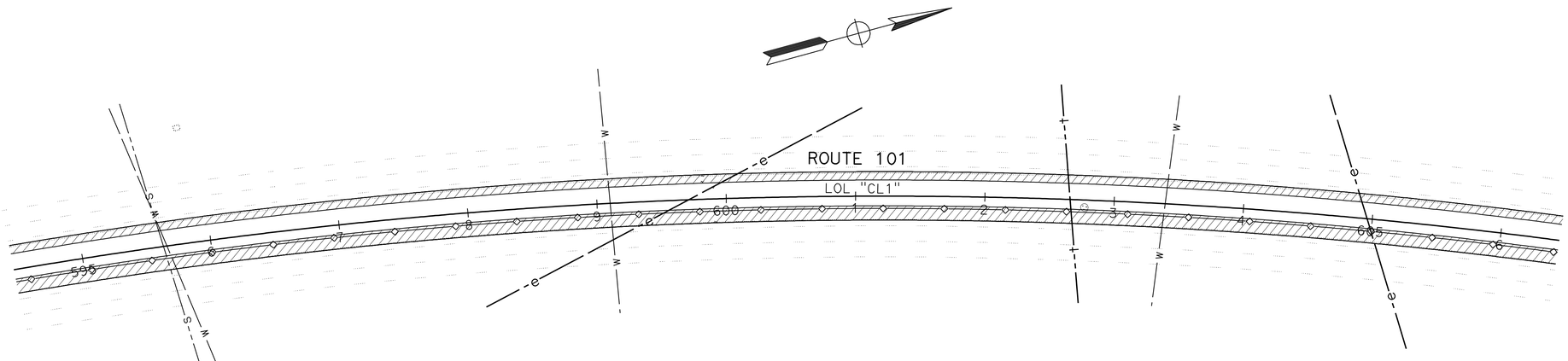

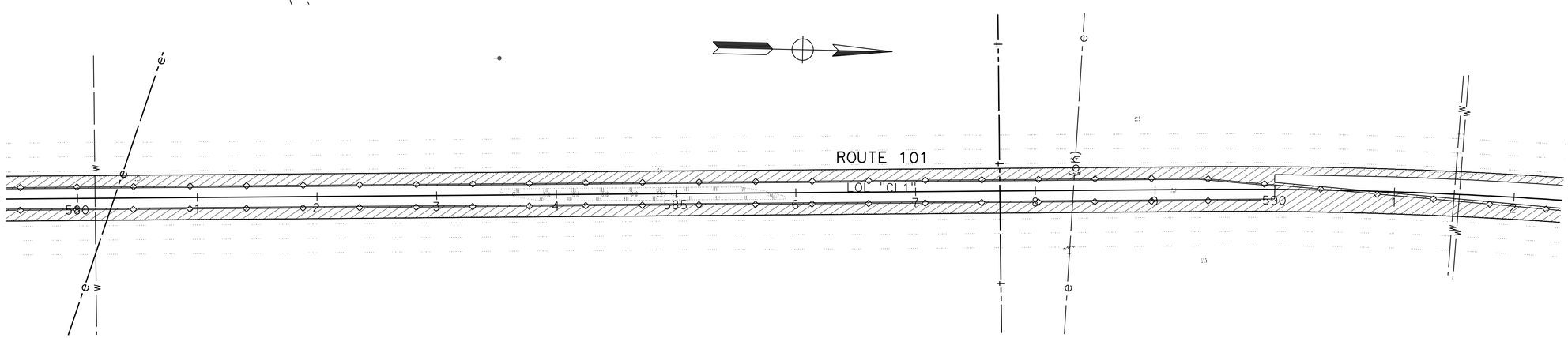

THIS PLAN ACCURATE FOR UTILITY WORK ONLY.

UTILITY PLAN

SCALE: 1" = 50'

U-2

STATE OF CALIFORNIA - DEPARTMENT OF TRANSPORTATION
Caltrans
DESIGN

FUNCTIONAL SUPERVISOR: S. WYATT
CALCULATED-DESIGNED BY: G.K. SCHNEIDER
CHECKED BY: M. O'NEAL
REVISED BY
DATE REVISED

LAST REVISION 07-08-10
DATE PLOTTED => 25-AUG-2010
TIME PLOTTED => 14:27

Dist	COUNTY	ROUTE	POST MILES TOTAL PROJECT	SHEET No.	TOTAL SHEETS
05	SLO	101	55.8/57.9	28	65

REGISTERED CIVIL ENGINEER 7-8-10 DATE

8-23-10
PLANS APPROVAL DATE

REGISTERED PROFESSIONAL ENGINEER G.K. SCHNEIDER No. 66985 Exp. 9/30/10 CIVIL STATE OF CALIFORNIA

THE STATE OF CALIFORNIA OR ITS OFFICERS OR AGENTS SHALL NOT BE RESPONSIBLE FOR THE ACCURACY OR COMPLETENESS OF SCANNED COPIES OF THIS PLAN SHEET.

NOTE:

EXACT SIGN LOCATIONS TO BE DETERMINED BY THE ENGINEER.

STATIONARY MOUNTED CONSTRUCTION AREA SIGNS

SIGN No. (X)	SIGN CODE		PANEL SIZE (INCHES)	No. OF POST AND SIZE (INCHES)	SIGN MESSAGE	NUMBER OF SIGNS
	FEDERAL	CALIFORNIA				
(A)	W20-1		60" x 60"	2 - 6" x 6"	ROAD WORK AHEAD	4
(B)	W20-1		48" x 48"	1 - 4" x 6"	ROAD WORK AHEAD	3
(C)	G20-2		60" x 24"	2 - 4" x 4"	END ROAD WORK	2
(D)	W21-5b		36" x 36"	1 - 4" x 6"	LEFT SHOULDER CLOSED XXX Ft	2
(E)		C30A	48" x 48"	1 - 4" x 6"	SHOULDER CLOSED	2
(F)	W7-3a			MOUNT ON (E)	NEXT 2 MILES	2

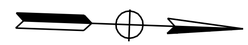

PASO ROBLES

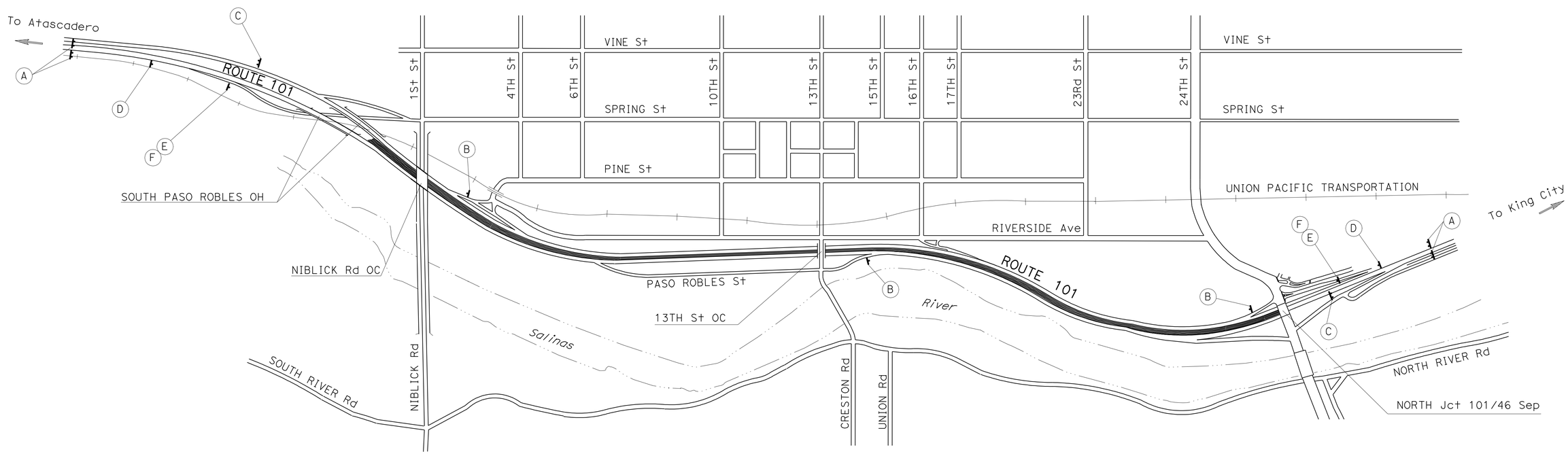

THIS PLAN ACCURATE FOR CONSTRUCTION AREA SIGN WORK ONLY.

CONSTRUCTION AREA SIGNS

NO SCALE

CS-1

STATE OF CALIFORNIA - DEPARTMENT OF TRANSPORTATION
Caltrans DESIGN

FUNCTIONAL SUPERVISOR S. WYATT
CALCULATED-DESIGNED BY
CHECKED BY M. O'NEAL
REVISED BY G.K. SCHNEIDER
DATE REVISED

LAST REVISION 07-08-10 | DATE PLOTTED => 25-AUG-2010 | TIME PLOTTED => 14:27

Dist	COUNTY	ROUTE	POST MILES TOTAL PROJECT	SHEET No.	TOTAL SHEETS
05	SLO	101	55.8/57.9	29	65

REGISTERED CIVIL ENGINEER 7-8-10 DATE

8-23-10
PLANS APPROVAL DATE

REGISTERED PROFESSIONAL ENGINEER G.K. SCHNEIDER No. 66985 Exp. 9/30/10 CIVIL STATE OF CALIFORNIA

THE STATE OF CALIFORNIA OR ITS OFFICERS OR AGENTS SHALL NOT BE RESPONSIBLE FOR THE ACCURACY OR COMPLETENESS OF SCANNED COPIES OF THIS PLAN SHEET.

NOTE:

EXACT LOCATION OF TEMPORARY BMPS WILL BE DETERMINED BY THE ENGINEER.

ROADWORK

LOCATION	CI 2 AB	HOT MIX ASPHALT (TYPE A)	TACK COAT
	CY	TON	
"CL1" 527+06.92 TO 637+98.83	4,164	3,390	3
FROM DQ-1		23	
TOTAL	4,164	3,413	3

REMOVE TREE (CLEARING AND GRUBBING)

LOCATION	EA (N)
"CL1" 590+45	1
"CL1" 606+90	1
"CL1" 617+05	1
TOTAL	3

(N) - NOT A SEPARATE PAY ITEM, FOR INFORMATION ONLY.

EARTHWORK

LOCATION	ROADWAY EXCAVATION	EMBANKMENT (N)
	CY	
"CL1" 527+06.92 TO 637+98.83	3,847	3,847

(N) - NOT A SEPARATE PAY ITEM, FOR INFORMATION ONLY.

REMOVE CRASH CUSHION (SAND FILLED)

LOCATION	EA
"CL1" 583+10	14
"CL1" 585+90	14
TOTAL	28

FENCE

LOCATION	CHAIN LINK FENCE (TYPE CL-6)	CHAIN LINK GATE (TYPE CL-6)
	LF	EA
"CL1" 529+22.33 R+ TO 529+34.55 L+	20	
"CL1" 529+34.55 L+ TO 529+40.69 L+		1
"CL1" 529+40.69 L+ TO 529+46.87 L+	10	
TOTAL	30	1

REMOVE MBGR

LOCATION	LF
"CL1" 529+83.90 TO 530+83.00	99.1
"CL1" 534+97.08 TO 536+54.42	157.3
"CL1" 535+55.52 TO 537+18.92	163.4
"CL1" 583+53.05 TO 585+92.31	239.3
"CL1" 583+53.32 TO 585+90.65	237.3
"CL1" 637+25.82 TO 638+00.64	74.8
TOTAL	971.2

TEMPORARY WATER POLLUTION CONTROL

LOCATION	Temp Const ENTRANCE	Temp DRAINAGE INLET PROTECTION
	EA	
"CL1" 527+06.92 TO 637+98.83	2	
"CL1" 544+51.50		1
"CL1" 556+51.26		1
"CL1" 564+50.36 R+		1
"CL1" 567+00.58 R+		1
"CL1" 569+86.51 R+		1
"CL1" 573+01.23 R+		1
"CL1" 576+40.94		1
"CL1" 584+86.27 L+		1
"CL1" 584+86.33		1
"CL1" 589+08.85		1
"CL1" 589+15.44		1
"CL1" 602+73.31		1
"CL1" 607+38.85		1
"CL1" 619+51.92		1
"CL1" 626+51.65		1
"CL1" 632+01.16		1
TOTAL	2	16

CONCRETE BARRIER

LOCATION	Conc BARRIER TYPE 25	25M	60S	Trans	ARCHITECTURAL TREATMENT	WILDLIFE PASSAGE WAY (TYPE S)
	LF					EA
"CL1" 527+01.6 TO 527+06.9 R+		5.3				
"CL1" 529+78.6 TO 529+83.9 L+		5.3				
"CL1" 527+06.9 TO 527+21.9 R+				15		
"CL1" 529+83.9 TO 529+98.9 L+				15		
"CL1" 527+21.9 TO 544+20			1,698.8			
"CL1" 527+21.9 TO 544+20					1,698.8	
"CL1" 529+98.9 TO 589+90			5,986.6			
"CL1" 529+98.9 TO 589+90					5,986.6	
"CL1" 527+60 R+ TO 542+60 R+						31
"CL1" 530+00 L+ TO 543+50 L+						28
"CL1" 543+50 L+ TO 545+50 L+						20
"CL1" 545+50 L+ TO 556+50 L+						22
"CL1" 556+50 L+ TO 557+50 L+						10
"CL1" 557+50 L+ TO 575+00 R+						35
"CL1" 561+52 TO 637+83.8			7,622.0			
"CL1" 561+52 TO 637+83.8					7,622.0	
"CL1" 562+00 L+ TO 575+00 L+						27
"CL1" 575+00 L+ TO 576+50 L+						15
"CL1" 575+00 R+ TO 576+50 R+						15
"CL1" 576+50 L+ TO 583+50 L+						14
"CL1" 576+50 R+ TO 583+50 R+						14
"CL1" 583+50 L+ TO 586+00 L+						25
"CL1" 583+50 R+ TO 586+00 R+						25
"CL1" 586+00 L+ TO 606+50 R+						41
"CL1" 586+00 R+ TO 589+50 R+						7
"CL1" 606+50 R+ TO 608+50 R+						20
"CL1" 608+50 R+ TO 616+50 L+						16
"CL1" 616+50 L+ TO 636+00 L+						10
"CL1" 636+60 TO 637+83.8			123.2			
"CL1" 636+60 TO 637+83.8					123.2	
"CL1" 637+83.8 TO 637+98.8 L+				15		
"CL1" 637+83.8 TO 637+98.8 R+				15		
"CL1" 637+98.8 TO 638+04.1 L+	5.3					
"CL1" 637+98.8 TO 638+04.1 R+	5.3					
TOTAL	10.6	10.6	15,430.6	60	15,490.6	375

SUMMARY OF QUANTITIES
Q-1

STATE OF CALIFORNIA - DEPARTMENT OF TRANSPORTATION
Caltrans DESIGN
FUNCTIONAL SUPERVISOR S. WYATT
CALCULATED-DESIGNED BY G.K. SCHNEIDER
CHECKED BY M. O'NEAL
REVISED BY
DATE REVISED

LAST REVISION 07-08-10 | DATE PLOTTED => 25-AUG-2010 TIME PLOTTED => 14:27

Dist	COUNTY	ROUTE	POST MILES TOTAL PROJECT	SHEET No.	TOTAL SHEETS
05	SLO	101	55.8/57.9	30	65

LICENSED LANDSCAPE ARCHITECT

8-23-10
PLANS APPROVAL DATE

LICENSED LANDSCAPE ARCHITECT
Patrick K. Bolger
No. 3211
11-30-2010
Renewal Date
7-8-10
Date
STATE OF CALIFORNIA

THE STATE OF CALIFORNIA OR ITS OFFICERS OR AGENTS SHALL NOT BE RESPONSIBLE FOR THE ACCURACY OR COMPLETENESS OF SCANNED COPIES OF THIS PLAN SHEET.

EROSION CONTROL (COMPOST BLANKET)

LOCATION		COMPOST (CY)
SHEET	STATION	
PP-1	526+90 TO 543+30	236
PP-2	561+60 TO 582+50	160
PP-3	582+50 TO 590+00	56
PP-5	636+60 TO 637+90	13
TOTAL		465

EROSION CONTROL (HYDROSEED)

LOCATION		HYDROSEED (SQFT)
SHEET	STATION	
PP-1	543+50 TO 554+50	15,075
PP-2	554+50 TO 561+20	8,406
PP-3	590+00 TO 596+50	7,515
PP-4	596+50 TO 624+50	40,394
PP-5	624+50 TO 636+50	18,720
TOTAL		90,110

COMPOST (INCORPORATE)

LOCATION		(N) COMPOST (CY)	COMPOST (SQYD)
SHEET	STATION		
PP-1	543+50 TO 554+50	93	1,675
PP-2	554+50 TO 561+20	52	934
PP-3	590+00 TO 596+50	46	835
PP-4	596+50 TO 624+50	250	4,488
PP-5	624+50 TO 636+50	115	2,080
TOTAL		556	10,012

(N) - NOT A SEPARATE PAY ITEM, FOR INFORMATION ONLY.

IRRIGATION SLEEVE

LOCATION		LENGTH (LF)
SHEET	STATION	
IP-2	561+10 TO 561+30	25
IP-3	590+10 TO 590+30	25
TOTAL		50

IRRIGATION CROSSOVERS

LOCATION		SIDE		WELDED STEEL PIPE CONDUIT	(N) WATER LINE CROSSOVER	(N) SPRINKLER CONTROL CROSSOVER
ROUTE	STATION	L†	R†	SIZE (INCH) 8 LENGTH (LF)	SIZE (INCH)	SIZE (INCH)
101	592+10		X	65	2½	2½
TOTAL				65		

(N) - NOT A SEPARATE PAY ITEM FOR INFORMATION ONLY
X - DENOTES REQUIREMENT

SUMMARY OF QUANTITIES

Q-2

STATE OF CALIFORNIA - DEPARTMENT OF TRANSPORTATION
Caltrans® LANDSCAPE ARCHITECTURE

SENIOR LANDSCAPE ARCHITECT: DENNIS REEVES
CALCULATED-DESIGNED BY: PATRICK BOLGER
CHECKED BY: DAVID EMERSON
REVISED BY
DATE REVISED

LAST REVISION 07-08-10
DATE PLOTTED => 25-AUG-2010
TIME PLOTTED => 14:27

Dist	COUNTY	ROUTE	POST MILES TOTAL PROJECT	SHEET No.	TOTAL SHEETS
05	SLO	101	55.8/57.9	31	65

LICENSED LANDSCAPE ARCHITECT

8-23-10
PLANS APPROVAL DATE

LICENSED LANDSCAPE ARCHITECT PATRICK K. BOLGER
Registered Landscape Architect
11-30-2010
Registration Date
7-8-10
Date
STATE OF CALIFORNIA

THE STATE OF CALIFORNIA OR ITS OFFICERS OR AGENTS SHALL NOT BE RESPONSIBLE FOR THE ACCURACY OR COMPLETENESS OF SCANNED COPIES OF THIS PLAN SHEET.

ABBREVIATIONS:

AMEND — amendment
B & B — balled and burlapped
Dia — diameter
EA — each
LB — pound
Oz — ounce
Ft — foot/feet
SQFT — square feet
SQYD — square yard
CF — cubic feet
CY — cubic yard
Max — maximum
Min — minimum
NCN — no common name
No. — number
Pkt — packet
PLT ESTB — plant establishment
Pvmt — pavement
R/W — right of way
SF — state furnished
TRVD — traveled

PLANT LIST AND PLANTING SPECIFICATIONS

PLANT GROUP	PLANT No.	SYMBOL	BOTANICAL NAME	COMMON NAME	SIZE	QUANTITY EACH	HOLE SIZE (INCH) Dia	HOLE SIZE (INCH) DEPTH	BASIN TYPE	IRON SULFATE	SOIL AMEND	COMMERCIAL FERTILIZER ① PLANTING	COMMERCIAL FERTILIZER ① PLT ESTB	BASIN MULCH	STAKING	PLANTING LIMITS MINIMUM DISTANCE (Ft) FROM TRVD WAY	PVMT	FENCE	WALL	PAVED DITCH	EARTH DITCH	ON CENTER (Ft)	REMARKS
U	1		ACER X FREEMANII	RED MAPLE	No. 15	6	18	18	II	-	-	4 Pkt	21 Oz	4 CF	⑧	-	-	-	-	20	-	⑦	TREE ③
	2		CERCIS CANADENSIS	EASTERN REDBUD	No. 15	9	18	18	II	-	-	4 Pkt	21 Oz	4 CF	⑧	-	-	-	-	15	-	⑦	TREE ③
	3		NERIUM OLEANDER 'MRS. ROEDINGS'	OLEANDER	No. 15	61	18	18	II	-	-	4 Pkt	21 Oz	4 CF	-	-	-	-	-	10	-	⑦	SHRUB
	4		PISTACHIA CHINENSIS	CHINESE PISTACHE	No. 15	50	18	18	II	-	-	4 Pkt	21 Oz	4 CF	⑧	-	-	-	-	20	-	⑦	TREE ③
	5		PLATANUS ACERIFOLIA 'BLOODGOOD'	LONDON PLANE TREE	No. 15	6	18	18	II	-	-	4 Pkt	21 Oz	4 CF	⑧	-	-	-	-	10	-	⑦	TREE ③
	6		PRUNUS CERASIFERA 'KRAUTER VESUVIUS'	PURPLE LEAF PLUM	No. 15	18	18	18	II	-	-	4 Pkt	21 Oz	4 CF	⑧	-	-	-	-	10	-	⑦	TREE ③
	7		PYRUS CALLERYANA 'BRADFORD'	BRADFORD PEAR	No. 15	28	18	18	II	-	-	4 Pkt	21 Oz	4 CF	⑧	-	-	-	-	15	-	⑦	TREE ③
	8		QUERCUS AGRIFOLIA	COAST LIVE OAK	No. 15	24	18	18	II	-	-	4 Pkt	21 Oz	4 CF	⑧	-	-	-	-	15	-	⑦	TREE ③

APPLICABLE WHEN CIRCLED:

① - Quantities shown are "per plant" unless shown as SQFT or SQYD application rates
2 - Basin mulch is included with mulch quantities shown on Planting Plan
③ - Trees to be planted minimum 7 feet from barrier.
4 - See Detail
5 - See Special Provisions
6 - See Standard Specifications
⑦ - As shown on plans
⑧ - Required

LEGEND:

EROSION CONTROL (COMPOST BLANKET) (2" DEPTH) MULCH AREA (4" DEPTH)

COMPOST (INCORPORATE) EROSION CONTROL (HYDROSEED)

MEDIAN BARRIER

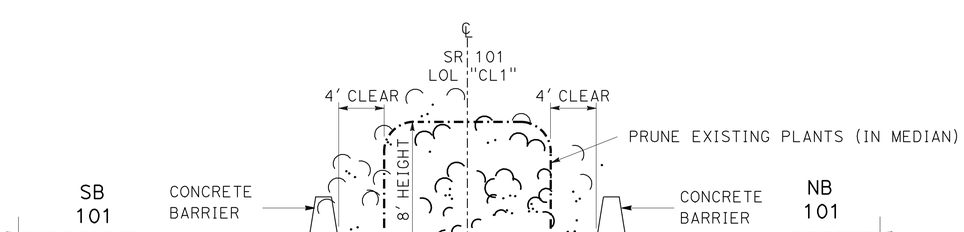

ROUTE 101
Sta 561+50 TO 590+00

PRUNE EXISTING PLANTS (MEDIAN PLANTING)
NO SCALE

NOTE:
UNDERLINED PORTIONS OF BOTANICAL NAME INDICATE ABBREVIATIONS USED ON PLANTING PLANS.

MULCH (N)

LOCATION SHEET	AREA MULCH (CY)	BASIN MULCH (CY)
PL-1	-	30
PP-1	472	-
PP-2	320	-
PP-3	112	-
PP-5	26	-
TOTAL	960	

(N) - NOT A SEPARATE PAY ITEM FOR INFORMATION ONLY.

PLANT LIST
PL-1

REVISED BY | DATE REVISED
PATRICK BOLGER | DAVID EMERSON
CALCULATED-DESIGNED BY | CHECKED BY
SENIOR LANDSCAPE ARCHITECT | DENNIS REEVES
STATE OF CALIFORNIA - DEPARTMENT OF TRANSPORTATION
Caltrans® LANDSCAPE ARCHITECTURE

LAST REVISION 07-08-10 | DATE PLOTTED => 25-AUG-2010 | TIME PLOTTED => 14:27

Dist	COUNTY	ROUTE	POST MILES TOTAL PROJECT	SHEET No.	TOTAL SHEETS
05	SLO	101	55.8/57.9	32	65

LICENSED LANDSCAPE ARCHITECT

8-23-10
PLANS APPROVAL DATE

LICENSED LANDSCAPE ARCHITECT
PATRICK K. BOLGER
Signature
11-30-2010
Renewal Date
7-8-10
Date
STATE OF CALIFORNIA

THE STATE OF CALIFORNIA OR ITS OFFICERS OR AGENTS SHALL NOT BE RESPONSIBLE FOR THE ACCURACY OR COMPLETENESS OF SCANNED COPIES OF THIS PLAN SHEET.

NOTE:

FOR ACCURATE RIGHT OF WAY DATA, CONTACT RIGHT OF WAY ENGINEERING AT THE DISTRICT OFFICE.

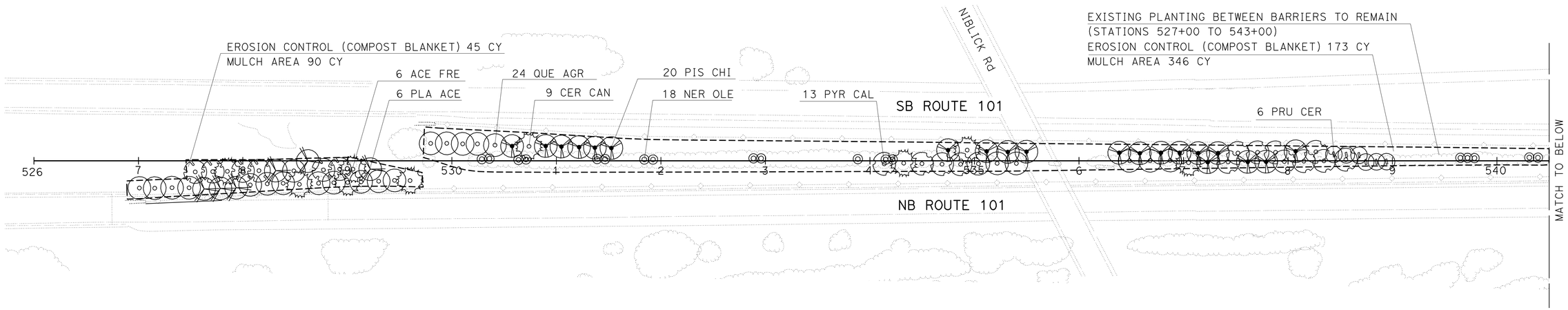

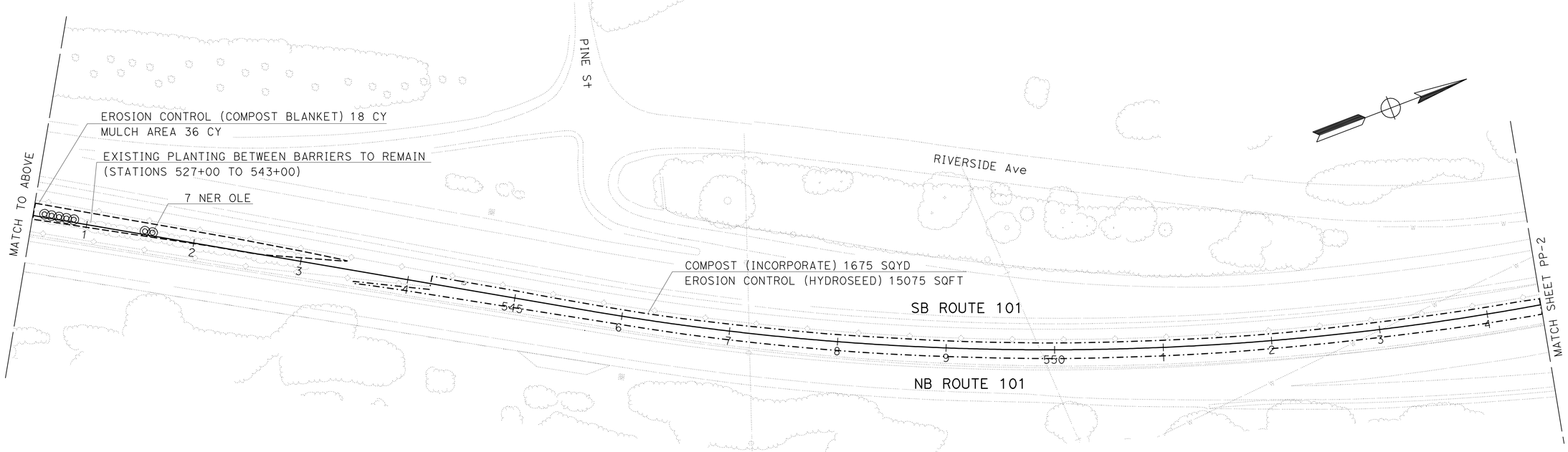

THIS PLAN ACCURATE FOR PLANTING WORK ONLY.

PLANTING PLAN
SCALE: 1" = 50'
PP-1

STATE OF CALIFORNIA - DEPARTMENT OF TRANSPORTATION
Caltrans® LANDSCAPE ARCHITECTURE

SENIOR LANDSCAPE ARCHITECT: DENNIS REEVES
CALCULATED-DESIGNED BY: PATRICK BOLGER
CHECKED BY: DAVID EMERSON
REVISED BY
DATE REVISED

LAST REVISION 07-08-10
DATE PLOTTED => 25-AUG-2010
TIME PLOTTED => 13:20

Dist	COUNTY	ROUTE	POST MILES TOTAL PROJECT	SHEET No.	TOTAL SHEETS
05	SLO	101	55.8/57.9	33	65

LICENSED LANDSCAPE ARCHITECT

8-23-10
PLANS APPROVAL DATE

LICENSED LANDSCAPE ARCHITECT
PATRICK K. BOLGER
Expiration Date 11-30-2010
Renewal Date 7-8-10
Date
STATE OF CALIFORNIA

THE STATE OF CALIFORNIA OR ITS OFFICERS OR AGENTS SHALL NOT BE RESPONSIBLE FOR THE ACCURACY OR COMPLETENESS OF SCANNED COPIES OF THIS PLAN SHEET.

NOTE:

FOR ACCURATE RIGHT OF WAY DATA, CONTACT RIGHT OF WAY ENGINEERING AT THE DISTRICT OFFICE.

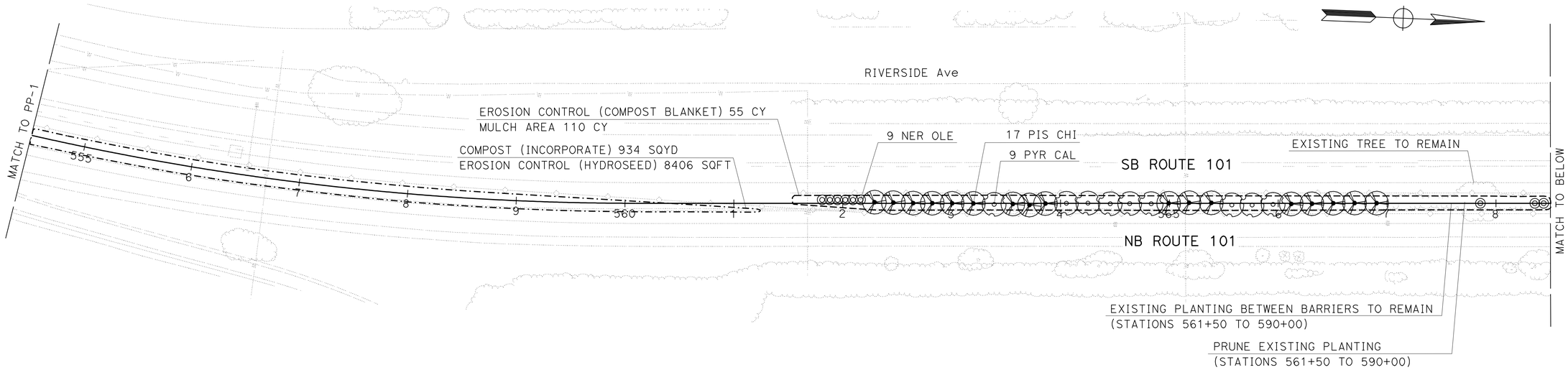

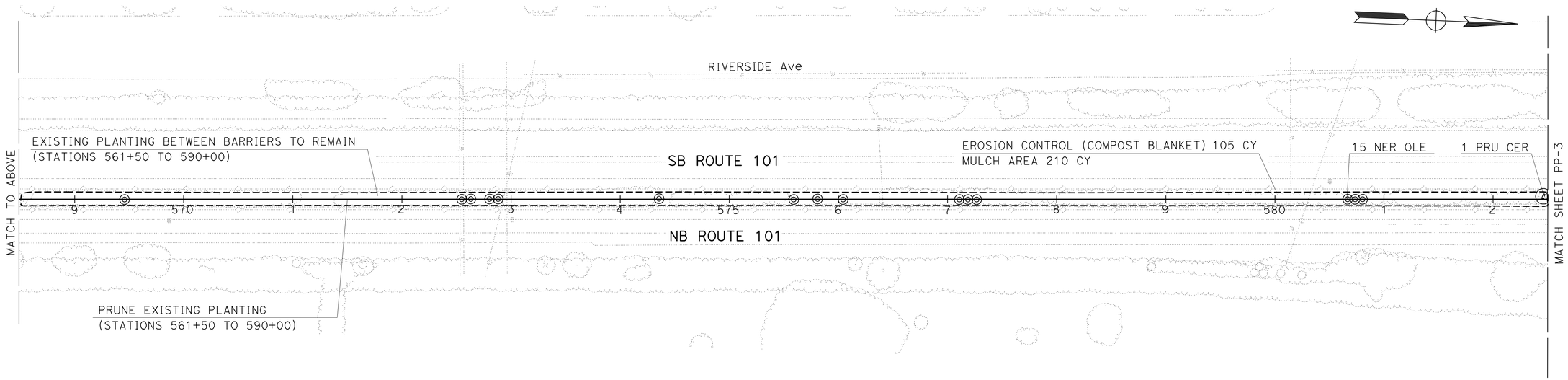

THIS PLAN ACCURATE FOR PLANTING WORK ONLY.

PLANTING PLAN
SCALE: 1" = 50' **PP-2**

STATE OF CALIFORNIA - DEPARTMENT OF TRANSPORTATION
Caltrans® LANDSCAPE ARCHITECTURE

SENIOR LANDSCAPE ARCHITECT: DENNIS REEVES
CALCULATED-DESIGNED BY: PATRICK BOLGER
CHECKED BY: DAVID EMERSON
REVISED BY
DATE REVISED

LAST REVISION 07-08-10
DATE PLOTTED => 25-AUG-2010
TIME PLOTTED => 13:20

Dist	COUNTY	ROUTE	POST MILES TOTAL PROJECT	SHEET No.	TOTAL SHEETS
05	SLO	101	55.8/57.9	34	65

LICENSED LANDSCAPE ARCHITECT

8-23-10
PLANS APPROVAL DATE

LICENSED LANDSCAPE ARCHITECT
PATRICK K. BOLGER
Registered Landscape Architect
11-30-2010
Registration Date
7-8-10
Date
STATE OF CALIFORNIA

THE STATE OF CALIFORNIA OR ITS OFFICERS OR AGENTS SHALL NOT BE RESPONSIBLE FOR THE ACCURACY OR COMPLETENESS OF SCANNED COPIES OF THIS PLAN SHEET.

NOTE:

FOR ACCURATE RIGHT OF WAY DATA, CONTACT RIGHT OF WAY ENGINEERING AT THE DISTRICT OFFICE.

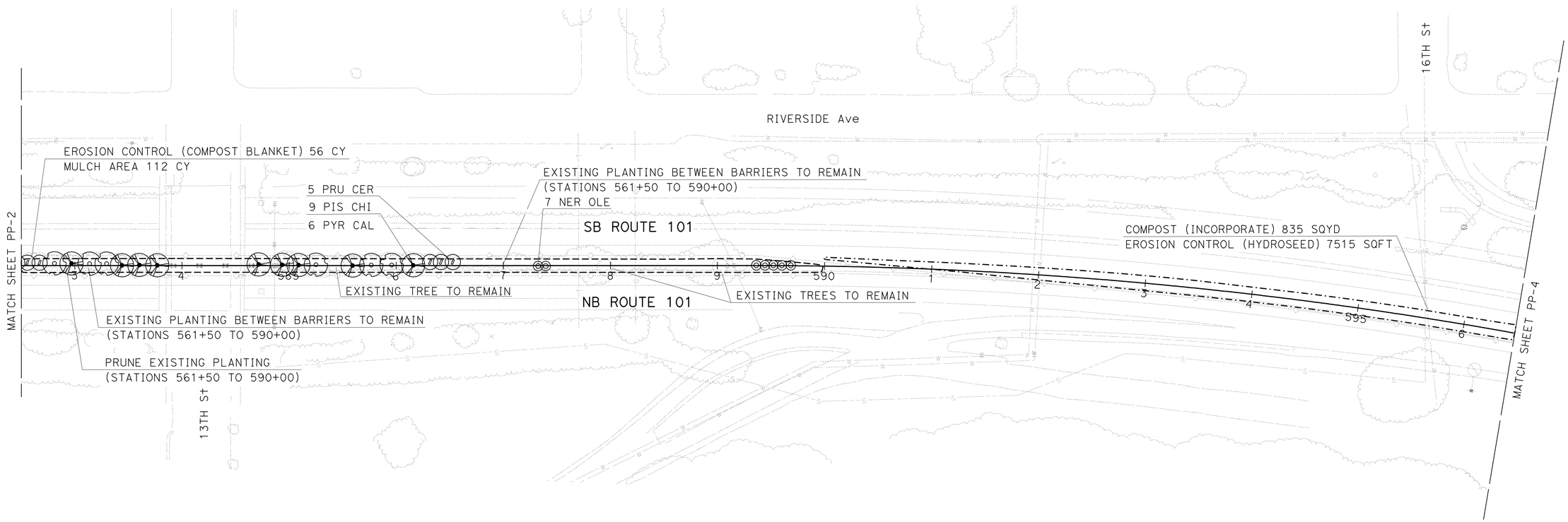

THIS PLAN ACCURATE FOR PLANTING WORK ONLY.

PLANTING PLAN

SCALE: 1" = 50′ **PP-3**

STATE OF CALIFORNIA - DEPARTMENT OF TRANSPORTATION
Caltrans® LANDSCAPE ARCHITECTURE

SENIOR LANDSCAPE ARCHITECT: DENNIS REEVES

CALCULATED-DESIGNED BY: PATRICK BOLGER
CHECKED BY: DAVID EMERSON

REVISED BY
DATE REVISED

LAST REVISION 07-08-10
DATE PLOTTED => 25-AUG-2010
TIME PLOTTED => 13:20

Dist	COUNTY	ROUTE	POST MILES TOTAL PROJECT	SHEET No.	TOTAL SHEETS
05	SLO	101	55.8/57.9	35	65

LICENSED LANDSCAPE ARCHITECT

8-23-10
PLANS APPROVAL DATE

LICENSED LANDSCAPE ARCHITECT
PATRICK K. BOLGER
No. 2422
Expiration Date
11-30-2010
Registration Date
7-8-10
Date
STATE OF CALIFORNIA

THE STATE OF CALIFORNIA OR ITS OFFICERS OR AGENTS SHALL NOT BE RESPONSIBLE FOR THE ACCURACY OR COMPLETENESS OF SCANNED COPIES OF THIS PLAN SHEET.

NOTE:

FOR ACCURATE RIGHT OF WAY DATA, CONTACT RIGHT OF WAY ENGINEERING AT THE DISTRICT OFFICE.

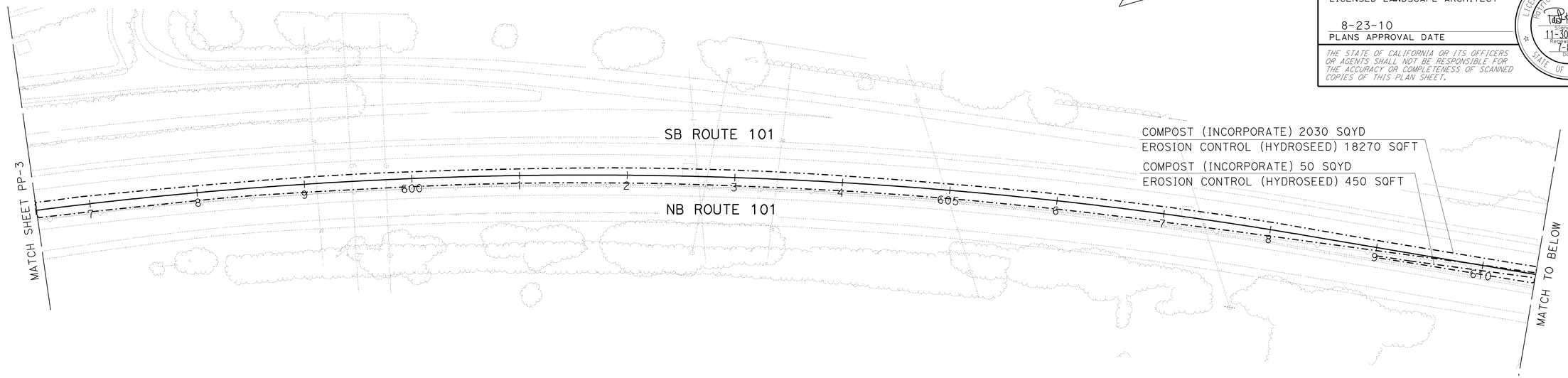

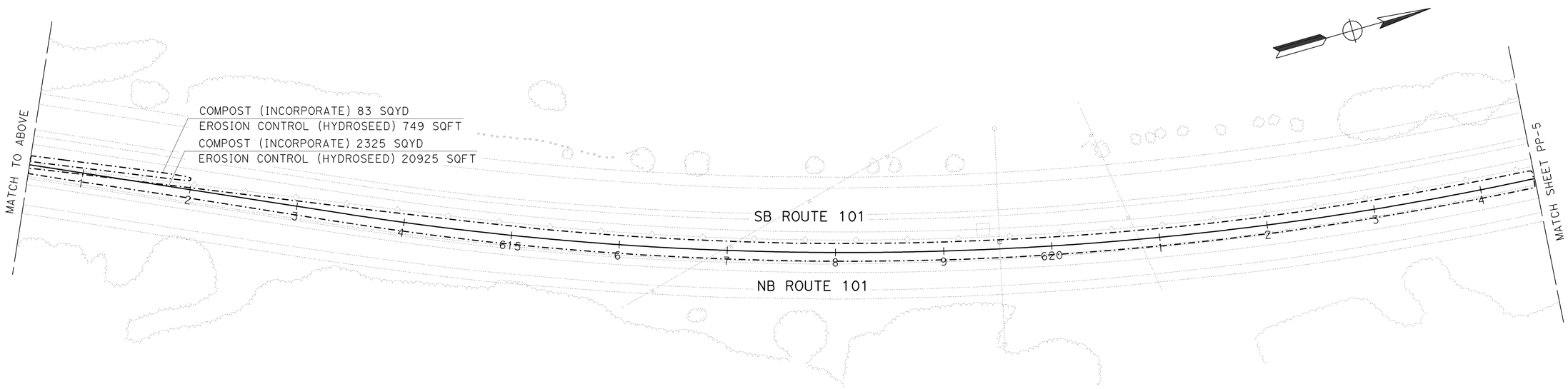

THIS PLAN ACCURATE FOR PLANTING WORK ONLY.

PLANTING PLAN

SCALE: 1" = 50'

PP-4

STATE OF CALIFORNIA - DEPARTMENT OF TRANSPORTATION
Caltrans® LANDSCAPE ARCHITECTURE

SENIOR LANDSCAPE ARCHITECT: DENNIS REEVES
CALCULATED-DESIGNED BY: PATRICK BOLGER
CHECKED BY: DAVID EMERSON
REVISED BY / DATE REVISED

LAST REVISION 07-08-10
DATE PLOTTED => 25-AUG-2010
TIME PLOTTED => 13:21

Dist	COUNTY	ROUTE	POST MILES TOTAL PROJECT	SHEET No.	TOTAL SHEETS
05	SLO	101	55.8/57.9	36	65

LICENSED LANDSCAPE ARCHITECT

8-23-10
PLANS APPROVAL DATE

LICENSED LANDSCAPE ARCHITECT
Patrick K. Bolger
No. 3022
Expiration Date
11-30-2010
Renewal Date
7-8-10
Date
STATE OF CALIFORNIA

THE STATE OF CALIFORNIA OR ITS OFFICERS OR AGENTS SHALL NOT BE RESPONSIBLE FOR THE ACCURACY OR COMPLETENESS OF SCANNED COPIES OF THIS PLAN SHEET.

NOTE:

FOR ACCURATE RIGHT OF WAY DATA, CONTACT RIGHT OF WAY ENGINEERING AT THE DISTRICT OFFICE.

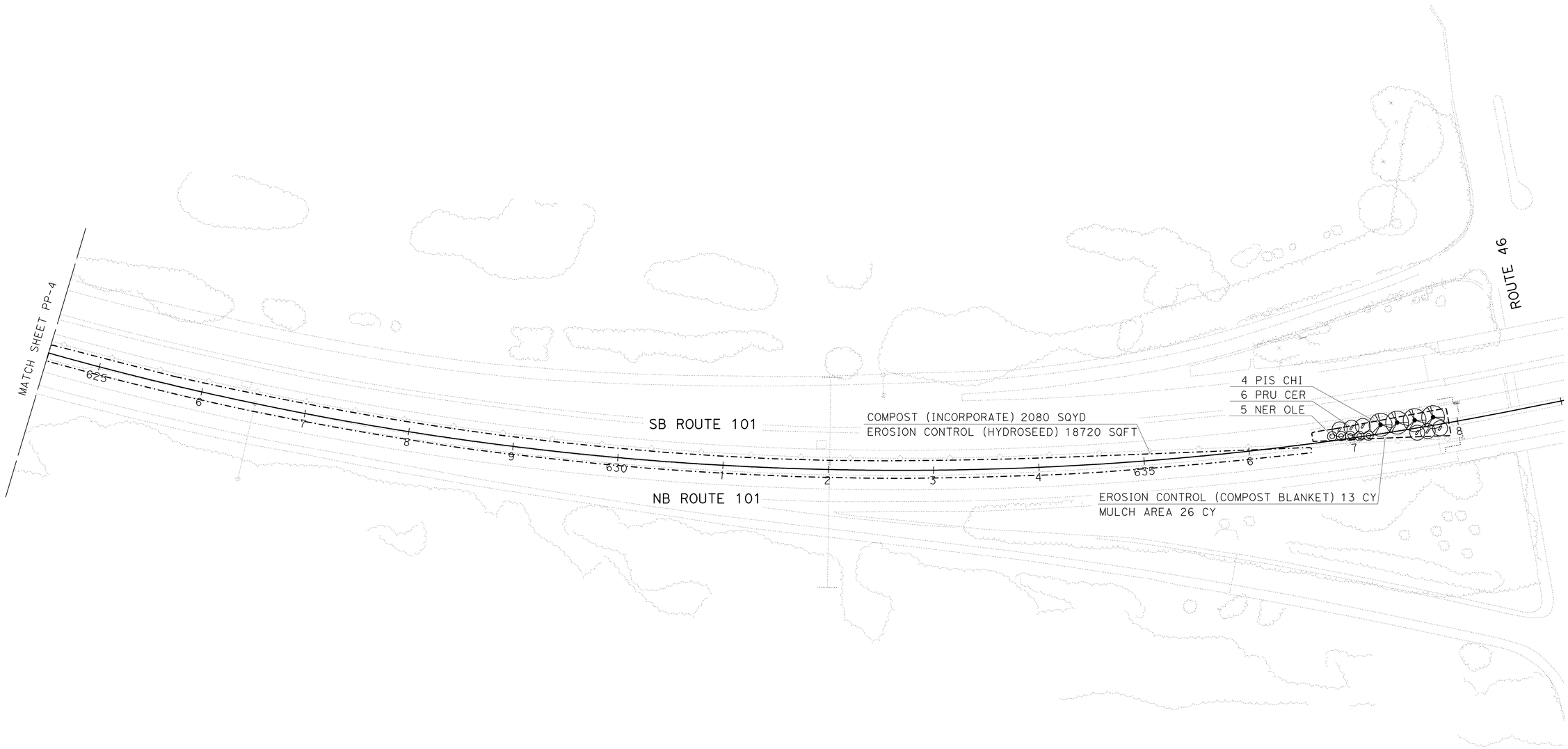

THIS PLAN ACCURATE FOR PLANTING WORK ONLY.

PLANTING PLAN
SCALE: 1" = 50'

PP-5

STATE OF CALIFORNIA - DEPARTMENT OF TRANSPORTATION
Caltrans® LANDSCAPE ARCHITECTURE

SENIOR LANDSCAPE ARCHITECT: DENNIS REEVES
CALCULATED-DESIGNED BY: PATRICK BOLGER
CHECKED BY: DAVID EMERSON
REVISED BY
DATE REVISED

LAST REVISION 07-08-10
DATE PLOTTED => 25-AUG-2010
TIME PLOTTED => 14:06

Dist	COUNTY	ROUTE	POST MILES TOTAL PROJECT	SHEET No.	TOTAL SHEETS
05	SLO	101	55.8/57.9	37	65

LICENSED LANDSCAPE ARCHITECT

8-23-10
PLANS APPROVAL DATE

LICENSED LANDSCAPE ARCHITECT
PATRICK K. BOLGER
No. 2248
Expiration Date
11-30-2010
Renewal Date
7-8-10
Date
STATE OF CALIFORNIA

THE STATE OF CALIFORNIA OR ITS OFFICERS OR AGENTS SHALL NOT BE RESPONSIBLE FOR THE ACCURACY OR COMPLETENESS OF SCANNED COPIES OF THIS PLAN SHEET.

NOTES:

1. FOR ACCURATE RIGHT OF WAY DATA, CONTACT RIGHT OF WAY ENGINEERING AT THE DISTRICT OFFICE.
2. PLASTIC PIPE (SUPPLY LINE)(LATERAL) THAT SUPPLIES ONLY ONE BUBBLER SPRINKLER SHALL BE 1".

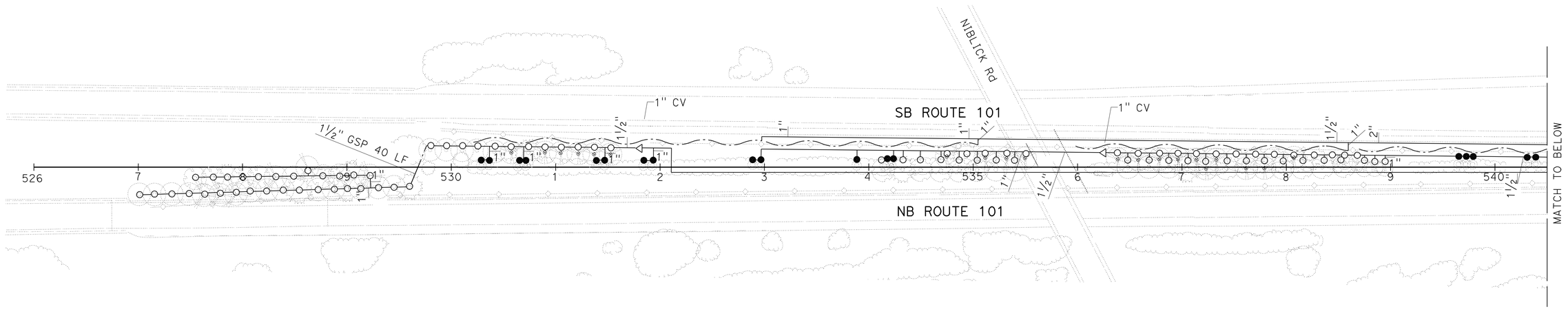

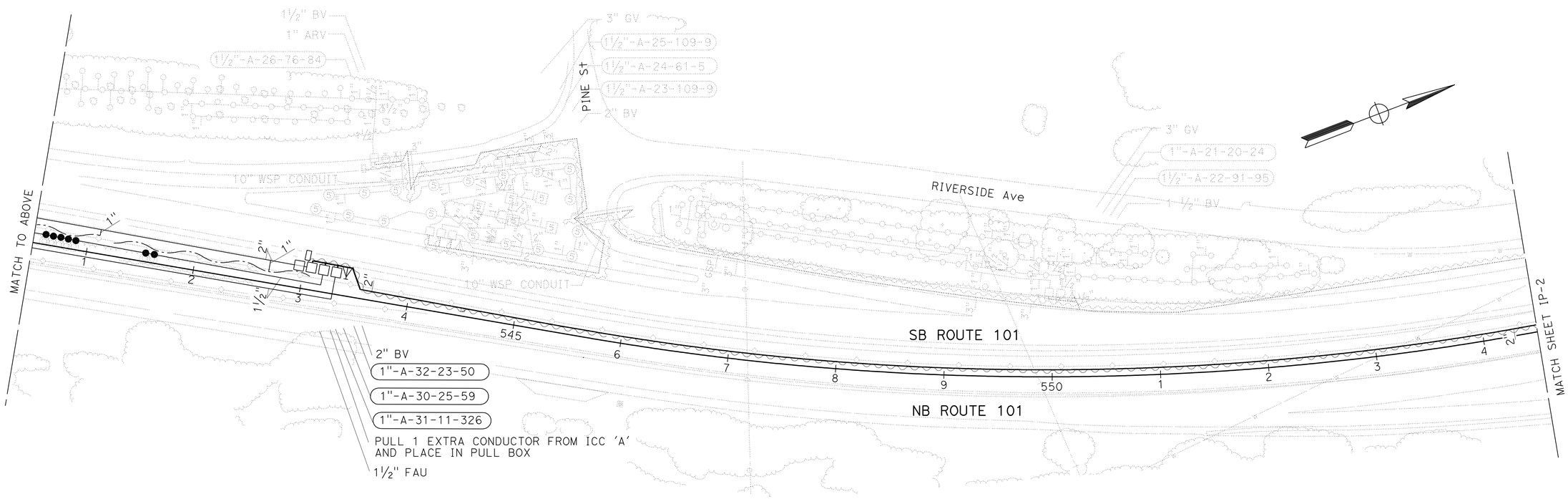

THIS PLAN ACCURATE FOR IRRIGATION WORK ONLY.

IRRIGATION PLAN
SCALE: 1" = 50'

IP-1

STATE OF CALIFORNIA - DEPARTMENT OF TRANSPORTATION
Caltrans® LANDSCAPE ARCHITECTURE

SENIOR LANDSCAPE ARCHITECT: DENNIS REEVES
CALCULATED-DESIGNED BY: PATRICK BOLGER
CHECKED BY: DAVID EMERSON
REVISED BY
DATE REVISED

LAST REVISION 07-08-10
DATE PLOTTED => 25-AUG-2010
TIME PLOTTED => 13:21

Dist	COUNTY	ROUTE	POST MILES TOTAL PROJECT	SHEET No.	TOTAL SHEETS
05	SLO	101	55.8/57.9	38	65

LICENSED LANDSCAPE ARCHITECT

8-23-10
PLANS APPROVAL DATE

THE STATE OF CALIFORNIA OR ITS OFFICERS OR AGENTS SHALL NOT BE RESPONSIBLE FOR THE ACCURACY OR COMPLETENESS OF SCANNED COPIES OF THIS PLAN SHEET.

LICENSED LANDSCAPE ARCHITECT
PATRICK K. BOLGER
No. 3248
11-30-2010
Renewal Date
7-8-10
Date
STATE OF CALIFORNIA

NOTE:

1. FOR ACCURATE RIGHT OF WAY DATA, CONTACT RIGHT OF WAY ENGINEERING AT THE DISTRICT OFFICE.

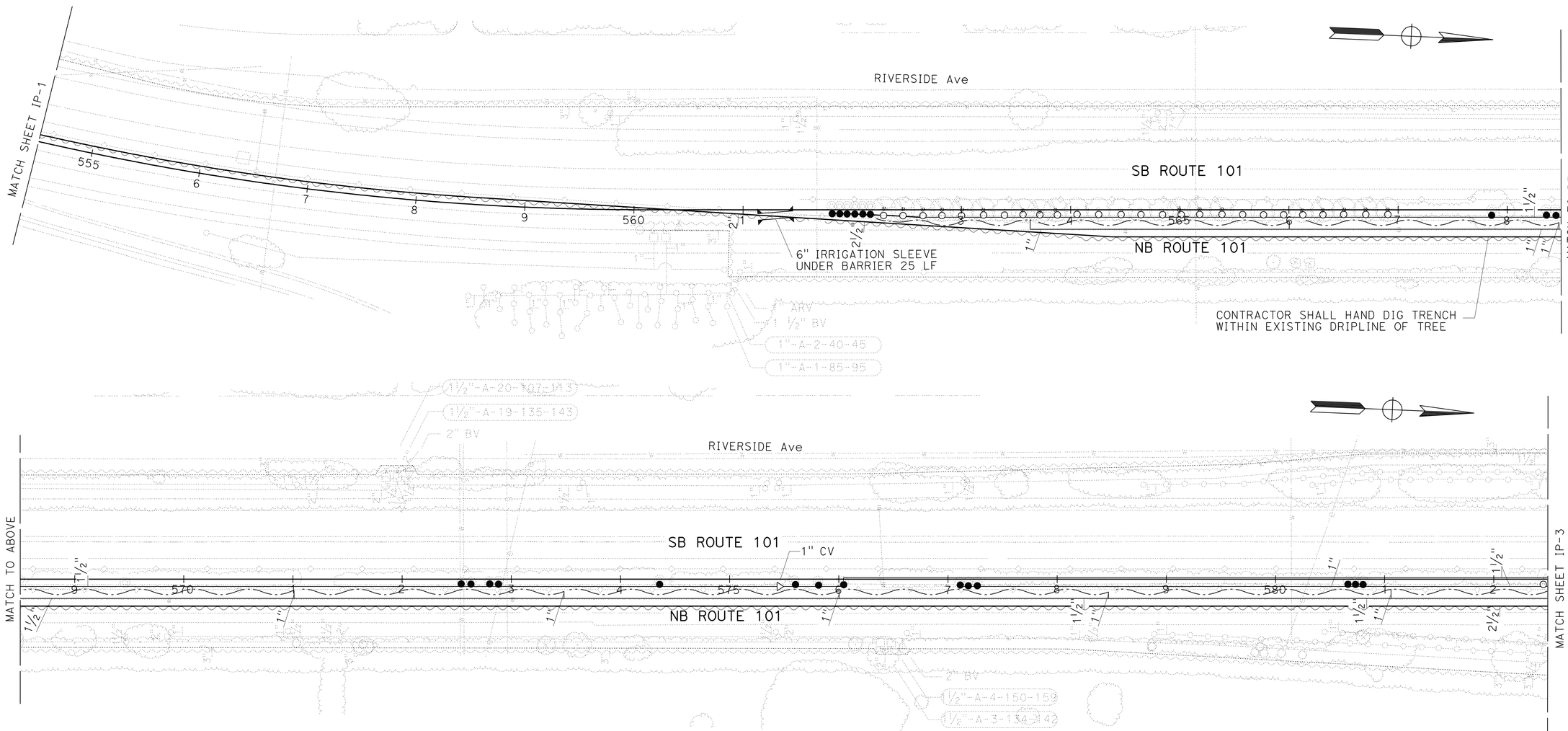

THIS PLAN ACCURATE FOR IRRIGATION WORK ONLY.

IRRIGATION PLAN
SCALE: 1" = 50'

IP-2

STATE OF CALIFORNIA - DEPARTMENT OF TRANSPORTATION
Caltrans® LANDSCAPE ARCHITECTURE

SENIOR LANDSCAPE ARCHITECT: DENNIS REEVES
CALCULATED-DESIGNED BY: PATRICK BOLGER
CHECKED BY: DAVID EMERSON
REVISED BY
DATE REVISED

LAST REVISION 07-08-10
DATE PLOTTED => 25-AUG-2010
TIME PLOTTED => 13:21

Dist	COUNTY	ROUTE	POST MILES TOTAL PROJECT	SHEET No.	TOTAL SHEETS
05	SLO	101	55.8/57.9	39	65

LICENSED LANDSCAPE ARCHITECT

8-23-10
PLANS APPROVAL DATE

LICENSED LANDSCAPE ARCHITECT
PATRICK K. BOLGER
No. 3211
11-30-2010
Renewal Date
7-8-10
Date
STATE OF CALIFORNIA

THE STATE OF CALIFORNIA OR ITS OFFICERS OR AGENTS SHALL NOT BE RESPONSIBLE FOR THE ACCURACY OR COMPLETENESS OF SCANNED COPIES OF THIS PLAN SHEET.

NOTE:

1. FOR ACCURATE RIGHT OF WAY DATA, CONTACT RIGHT OF WAY ENGINEERING AT THE DISTRICT OFFICE.

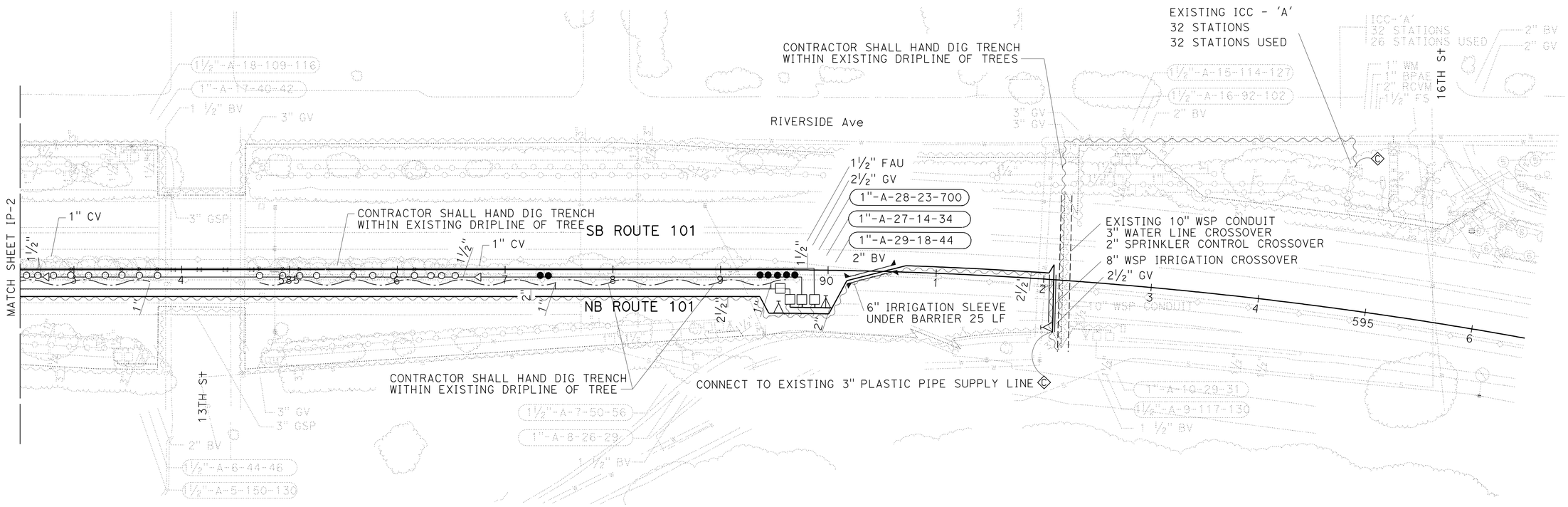

THIS PLAN ACCURATE FOR IRRIGATION WORK ONLY.

IRRIGATION PLAN
SCALE: 1" = 50'

IP-3

STATE OF CALIFORNIA - DEPARTMENT OF TRANSPORTATION
Caltrans® LANDSCAPE ARCHITECTURE

SENIOR LANDSCAPE ARCHITECT: DENNIS REEVES
CALCULATED-DESIGNED BY: PATRICK BOLGER
CHECKED BY: DAVID EMERSON
REVISED BY
DATE REVISED

LAST REVISION 07-08-10
DATE PLOTTED => 25-AUG-2010
TIME PLOTTED => 13:21

BORDER LAST REVISED 7/2/2010
USERNAME => trpierce
DGN FILE => 0500000321t1003.dgn
RELATIVE BORDER SCALE IS IN INCHES 0 1 2 3
UNIT 1502
PROJECT NUMBER & PHASE 05000003211

Dist	COUNTY	ROUTE	POST MILES TOTAL PROJECT	SHEET No.	TOTAL SHEETS
05	SLO	101	55.8/57.9	40	65

LICENSED LANDSCAPE ARCHITECT

8-23-10
PLANS APPROVAL DATE

LICENSED LANDSCAPE ARCHITECT Patrick K Bolger-Hill
Expiration Date 11-30-2010
Registrant Date 7-8-10
Date
STATE OF CALIFORNIA

THE STATE OF CALIFORNIA OR ITS OFFICERS OR AGENTS SHALL NOT BE RESPONSIBLE FOR THE ACCURACY OR COMPLETENESS OF SCANNED COPIES OF THIS PLAN SHEET.

NOTE:

1. FOR ACCURATE RIGHT OF WAY DATA, CONTACT RIGHT OF WAY ENGINEERING AT THE DISTRICT OFFICE.

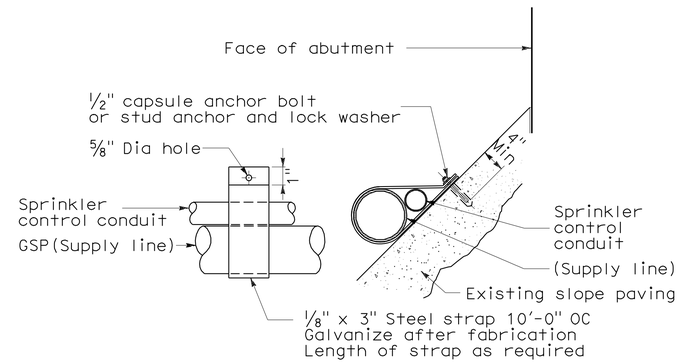

ELEVATION SECTION

PIPE ANCHOR TYPE 1

NO SCALE

1 INSTALL GSP AND SCC ON TOP OF SLOPE PAVING AND SECURE WITH PIPE ANCHOR TYPE 1 AT 10 FEET ON CENTER. LOCATE AT TOP OF SLOPE CLOSE TO BRIDGE ABUTMENT TO MINIMIZE VISIBILITY FROM ROADWAY.

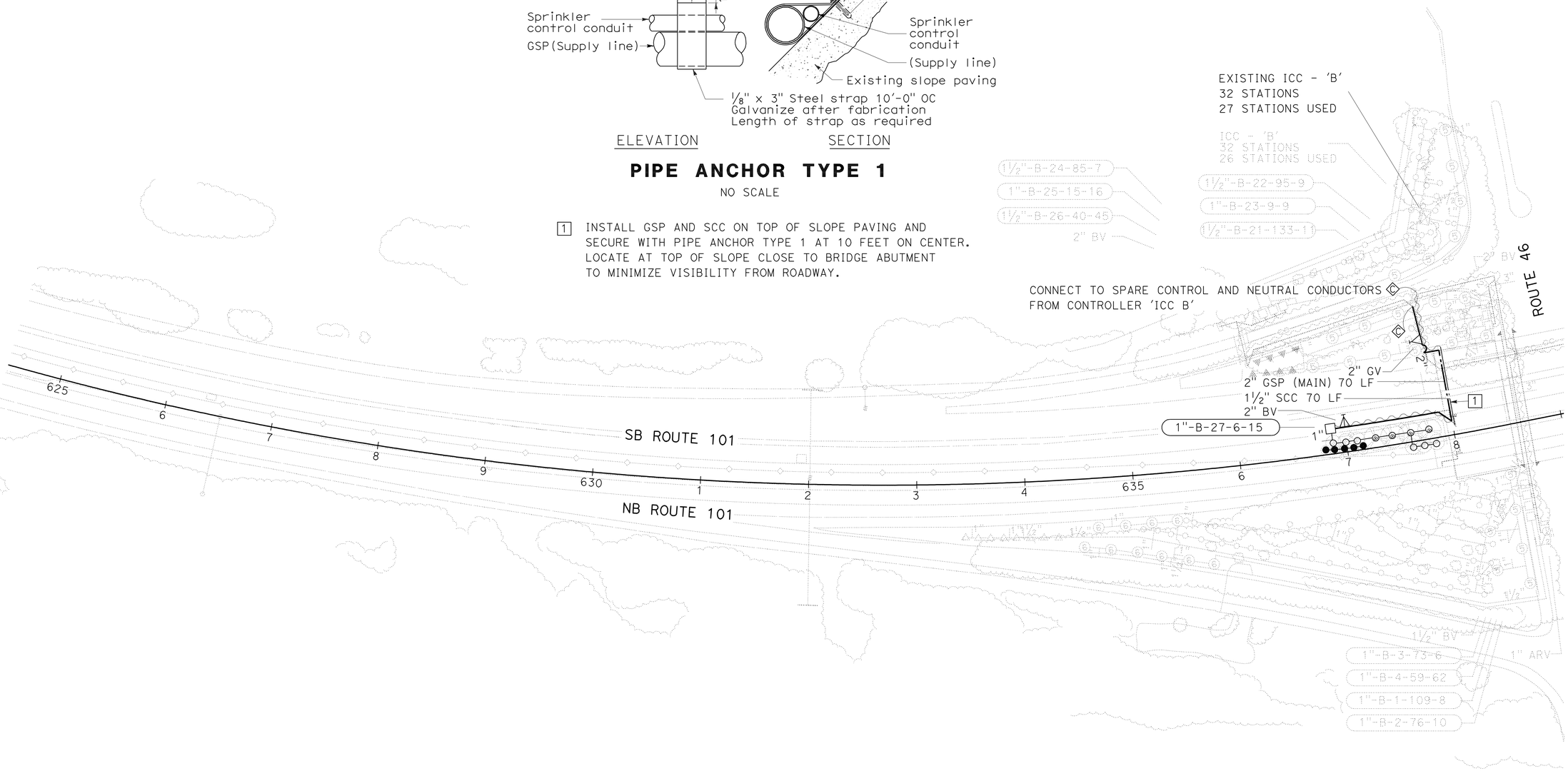

THIS PLAN ACCURATE FOR IRRIGATION WORK ONLY.

IRRIGATION PLAN

SCALE: 1" = 50'

IP-4

STATE OF CALIFORNIA - DEPARTMENT OF TRANSPORTATION
Caltrans® LANDSCAPE ARCHITECTURE

SENIOR LANDSCAPE ARCHITECT: DENNIS REEVES

CALCULATED-DESIGNED BY: PATRICK BOLGER
CHECKED BY: DAVID EMERSON

REVISED BY
DATE REVISED

LAST REVISION 07-08-10
DATE PLOTTED => 30-AUG-2010
TIME PLOTTED => 11:54

Dist	COUNTY	ROUTE	POST MILES TOTAL PROJECT	SHEET No.	TOTAL SHEETS
05	SLO	101	55.8/57.9	41	65

LICENSED LANDSCAPE ARCHITECT

8-23-10
PLANS APPROVAL DATE

LICENSED LANDSCAPE ARCHITECT
PATRICK K. BOLGER
Signature
11-30-2010
Renewal Date
7-8-10
Date
STATE OF CALIFORNIA

THE STATE OF CALIFORNIA OR ITS OFFICERS OR AGENTS SHALL NOT BE RESPONSIBLE FOR THE ACCURACY OR COMPLETENESS OF SCANNED COPIES OF THIS PLAN SHEET.

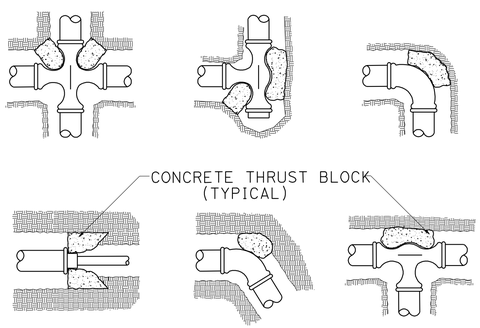

THRUST BLOCKS

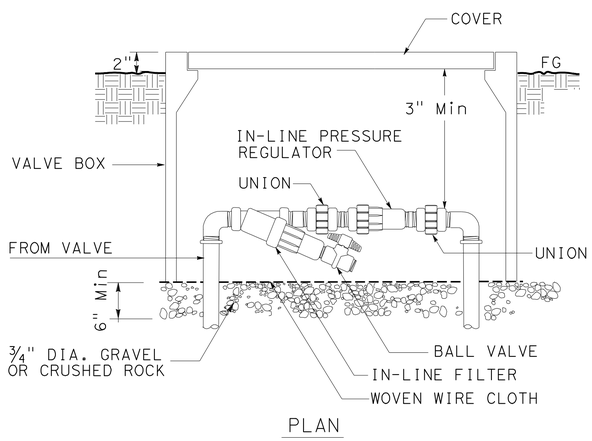

FILTER ASSEMBLY UNIT

IRRIGATION LEGEND

PLASTIC PIPE (PR 315)(SUPPLY LINE)(MAIN)

PLASTIC PIPE (PR 200)(SUPPLY LINE)(LATERAL)

SPRINKLER SCHEDULE

SYMBOL	TYPE	DESCRIPTION	SPRAY PATTERN	OPERATING PRESSURE (PSI)	PRESSURE COMPENSATING	PLUS/MINUS 5% (2) DISCHARGE: GALLONS PER MINUTE (GPM)	GALLONS PER HOUR (GPH)	RADIUS (Ft)	WIDTH x LENGTH (Ft)	MATERIAL	INLET CONNECTION (NPT INCH)	POSITIVE-LOCKING ADJ ARC STOP	BACKSPLASH PREVENTER	DIFFUSER PIN	DISTANCE CONTROL FLAP	ADJ DISCHARGE	RISER: TYPE	MATERIAL: PLASTIC	GALVANIZED	SIZE (IPS INCH)	HEIGHT (INCH)	FLOW SHUTOFF DEVICE	SWING JOINT (TYPE)	RISER SUPPORT	SPRINKLER PROTECTOR (TYPE)	REMARKS
●	C-2	BUBBLER	-	30	X	0.50	-	-	-	PL	½	-	-	-	-	X	V	-	-	½	-	-	-	-	-	(4) (5)
●	C-2	BUBBLER	-	30	X	0.25	-	-	-	PL	½	-	-	-	-	-	V	-	-	½	-	-	-	-	-	(4) (5)
-	D-1	EMITTER	-	30	X	-	2.0	-	-	PL	-	-	-	-	-	-	-	-	-	-	-	-	-	-	-	(6)

X IN BOX DENOTES REQUIREMENT

APPLICABLE WHEN CIRCLED BELOW:

1 - See Special Provisions.
(2) - If a pressure compensating device is specified, the discharge and radii shown reflect its use.
3 - Check valve required.
(4) - One bubbler required per plant.
(5) - Bubbler to be installed on the uphill side of plant.
(6) - Two emitters per existing plant to be installed on opposite sides of the plant. Existing plants at 8' OC.

ABBREVIATIONS

F	full circle	Ft	feet/foot
P	part circle	GPM	gallons per minute
F/P	full/part circle	GPH	gallons per hour
Q	quarter circle	Adj	adjustable
T	third circle	PL	plastic
H	half circle	B/B	brass/bronze
TT	two third circle	B/PL	brass/plastic
TQ	three quarter circle	B/B/PL	brass/bronze/plastic
CST	center strip	NPT	national pipe thread
SST	side strip	IPS	iron pipe size
EST	end strip	PSI	pounds per square inch

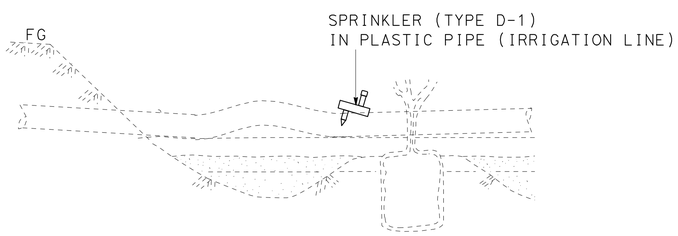

SPRINKLER (TYPE D-1)

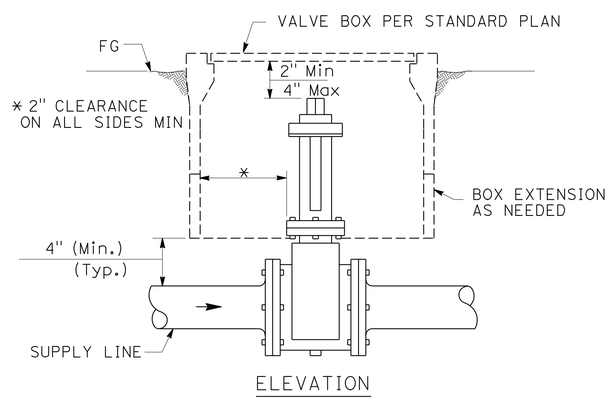

GATE VALVE

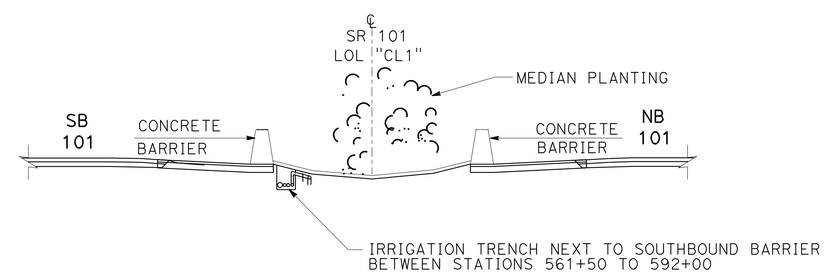

IRRIGATION TRENCH LOCATION

SPRINKLER SCHEDULE AND LANDSCAPE DETAILS

NO SCALE

LD-1

STATE OF CALIFORNIA - DEPARTMENT OF TRANSPORTATION
Caltrans LANDSCAPE ARCHITECTURE

SENIOR LANDSCAPE ARCHITECT: DENNIS REEVES
CALCULATED-DESIGNED BY: PATRICK BOLGER
CHECKED BY: DAVID EMERSON
REVISED BY
DATE REVISED

LAST REVISION 07-08-10 | DATE PLOTTED => 25-AUG-2010 | TIME PLOTTED => 13:17

Dist	COUNTY	ROUTE	POST MILES TOTAL PROJECT	SHEET No.	TOTAL SHEETS
05	SLO	101	55.8/57.9	42	65

Xavier Alfaro 8-24-10
REGISTERED ELECTRICAL ENGINEER DATE

8-23-10
PLANS APPROVAL DATE

REGISTERED PROFESSIONAL ENGINEER XAVIER I. ALFARO No. E17488 Exp. 6-30-11 ELECTRICAL STATE OF CALIFORNIA

THE STATE OF CALIFORNIA OR ITS OFFICERS OR AGENTS SHALL NOT BE RESPONSIBLE FOR THE ACCURACY OR COMPLETENESS OF SCANNED COPIES OF THIS PLAN SHEET.

NOTES: (FOR SHEETS E-1 AND E-2)

1. FOR ACCURATE RIGHT OF WAY AND ACCESS DATA, CONTACT RIGHT OF WAY ENGINEERING AT THE DISTRICT OFFICE.

2 120/240 V, 1Ø, 3-WIRE TYPE III-BF SERVICE EQUIPMENT ENCLOSURE WITH THE FOLLOWING CIRCUIT BREAKERS:

CTID No. 05491010056150

AMPERES	VOLTS	POLES	NAME PLATE	METER	PHOTOELECTRIC CONTROL TYPE
100	240	2	MAIN BREAKER	YES	——
30	240	2	LIGHTING	YES	V
15	120	1	LIGHTING CONTROL	YES	——
20	120	1	SPARE	YES	——

3 PULL BOX WILL BE USED BY FUTURE LIGHTING SYSTEM ASSOCIATED WITH TRAFFIC SIGNAL PROJECT AT 17th St AND RIVERSIDE Ave.

ABBREVIATIONS:

CTID = CALTRANS IDENTIFICATION
PG&E = PACIFIC GAS AND ELECTRIC

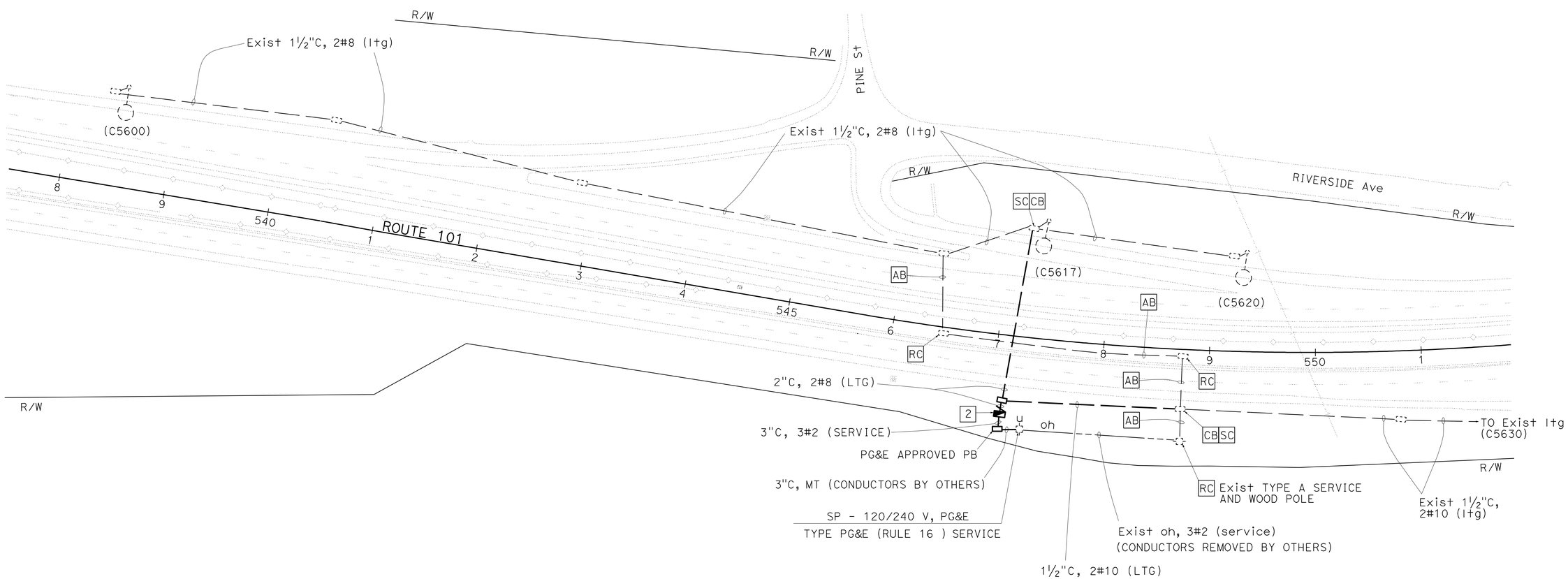

THIS PLAN IS ACCURATE FOR ELECTRICAL WORK ONLY.

MODIFY LIGHTING

SCALE: 1" = 50′

E-1

STATE OF CALIFORNIA - DEPARTMENT OF TRANSPORTATION
Caltrans® ELECTRICAL DESIGN

FUNCTIONAL SUPERVISOR: ALI BAKHDOUD
CALCULATED-DESIGNED BY: XAVIER ALFARO
CHECKED BY: PAUL MATOS
REVISED BY
DATE REVISED

LAST REVISION 08-24-10
DATE PLOTTED => 25-AUG-2010
TIME PLOTTED => 13:18

Dist	COUNTY	ROUTE	POST MILES TOTAL PROJECT	SHEET No.	TOTAL SHEETS
05	SLO	101	55.8/57.9	43	65

Xavier Alfaro 8-24-10
REGISTERED ELECTRICAL ENGINEER DATE

8-23-10
PLANS APPROVAL DATE

REGISTERED PROFESSIONAL ENGINEER XAVIER I. ALFARO No. E17488 Exp. 6-30-11 ELECTRICAL STATE OF CALIFORNIA

THE STATE OF CALIFORNIA OR ITS OFFICERS OR AGENTS SHALL NOT BE RESPONSIBLE FOR THE ACCURACY OR COMPLETENESS OF SCANNED COPIES OF THIS PLAN SHEET.

NOTE:

1. FOR ACCURATE RIGHT OF WAY AND ACCESS DATA, CONTACT RIGHT OF WAY ENGINEERING AT THE DISTRICT OFFICE.

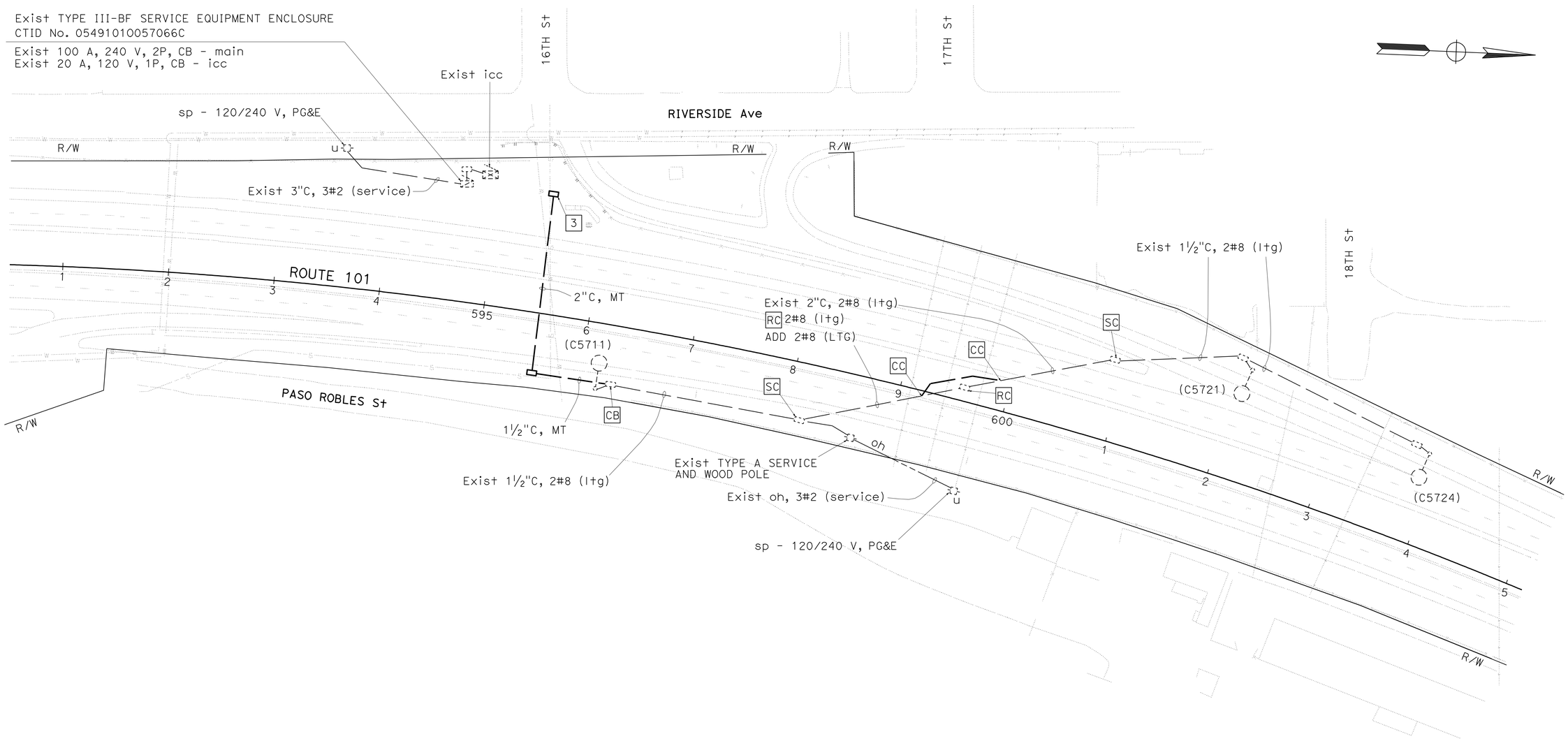

THIS PLAN IS ACCURATE FOR ELECTRICAL WORK ONLY.

MODIFY LIGHTING

SCALE: 1" = 50'

E-2

STATE OF CALIFORNIA - DEPARTMENT OF TRANSPORTATION
Caltrans® ELECTRICAL DESIGN

FUNCTIONAL SUPERVISOR: ALI BAKHDOUD
CALCULATED-DESIGNED BY: XAVIER ALFARO
CHECKED BY: PAUL MATOS
REVISED BY
DATE REVISED

LAST REVISION 08-24-10
DATE PLOTTED => 25-AUG-2010
TIME PLOTTED => 13:18

DIST	COUNTY	ROUTE	POST MILES TOTAL PROJECT	SHEET NO.	TOTAL SHEETS
05	SLO	101	55.8/57.9	44	65

REGISTERED CIVIL ENGINEER

November 17, 2006
PLANS APPROVAL DATE

REGISTERED PROFESSIONAL ENGINEER Dallas Forester No. C37765 Exp. 12-31-06 CIVIL STATE OF CALIFORNIA

The State of California or its officers or agents shall not be responsible for the accuracy or completeness of electronic copies of this plan sheet.

To accompany plans dated 8-23-10

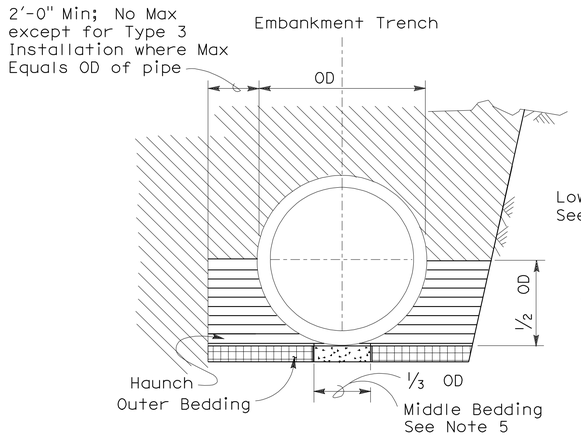

BACKFILL

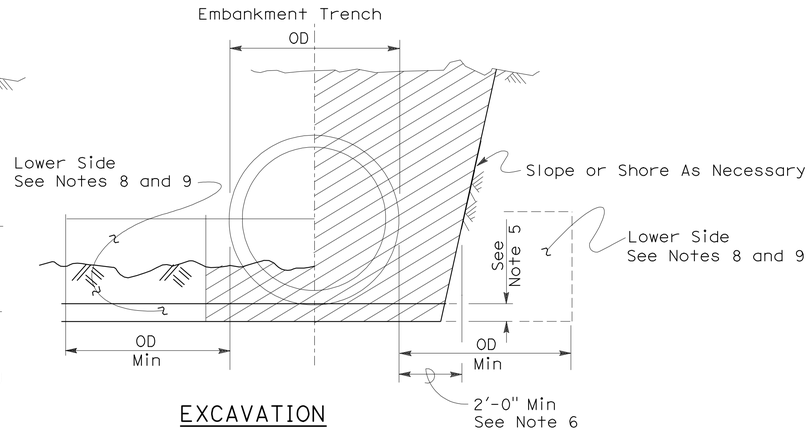

EXCAVATION

Roadway Embankment

Structure Backfill (Culvert) See Note 6

Structure Backfill (Culvert) See Note 6

Loose Backfill

Excavation Structure (Culvert)

TYPE 1 INSTALLATION:

The haunch and outer bedding shall be compacted to a minimum 90 percent relative compaction. In addition, the minimum sand equivalent in these areas shall be 30 and the maximum percentage passing the 75 μm sieve size shall be 12.

TYPE 2 INSTALLATION:

The haunch and outer bedding shall be compacted to a minimum 90 percent relative compaction. In addition, the minimum sand equivalent in these areas shall be 25.

TYPE 3 INSTALLATION:

The haunch and outer bedding shall be compacted to a minimum 85 percent relative compaction. 90 percent relative compaction will be required where the fill over the pipe is less than 4'-0" or 1/2 OD.

INSTALLATION TYPE 1

MINIMUM CLASS AND D-LOAD	COVER	
	108" Dia AND SMALLER	OVER 108" Dia
Class II 1000D	14.9'	12.9'
Class III 1350D	15.0' - 20.9'	13.0' - 18.9'
Class III Special 1700D	21.0' - 26.9'	19.0' - 24.9'
Class IV 2000D	27.0' - 31.9'	25.0' - 29.9'
Class IV Special 2500D	32.0' - 40.9'	30.0' - 38.9'
Class V 3000D	41.0' - 49.9'	39.0' - 46.9'
Class V Special 3600D	50.0' - 59.0'	47.0' - 58.0'

INSTALLATION TYPE 2

MINIMUM CLASS AND D-LOAD	COVER
Class II 1000D	9.9'
Class III 1350D	10.0'- 14.9'
Class III Special 1700D	15.0' - 19.9'
Class IV 2000D	20.0' - 24.9'
Class IV Special 2500D	25.0' - 31.9'
Class V 3000D	32.0' - 38.9'
Class V Special 3600D	39.0' - 47.0'

INSTALLATION TYPE 3

MINIMUM CLASS AND D-LOAD	COVER	
	48" Dia AND SMALLER	OVER 48" Dia
Class II 1000D	7.9'	5.9'
Class III 1350D	8.0' - 10.9'	6.0' - 8.9'
Class III Special 1700D	11.0' - 14.9'	9.0' - 12.9'
Class IV 2000D	15.0' - 17.9'	13.0' - 15.9'
Class IV Special 2500D	18.0' - 21.9'	16.0' - 19.9'
Class V 3000D	22.0' - 26.9'	20.0' - 24.9'
Class V Special 3600D	30.0' - 33.0'	25.0' - 31.0'

NOTES:

1. Unless otherwise shown on the plans or specified in the special provision, the Contractor shall have the option of selecting the class of RCP and the type of installation to be used, provided the height of cover does not exceed the value shown for the RCP selected.
   Example: 24" RCP culvert with maximum cover of 19'-0" the options are:
   a) Class III or stronger with Installation Type 1.
   b) Class III Special or stronger with Installation Type 2.
   c) Class IV Special or stronger with Installation Type 3.
   Cover is defined as the maximum vertical distance from top of the pipe to finished grade within the length of any given culvert.
2. The class of RCP and Installation Type selected shall be the same throughout the length of any given culvert.
3. The "length of any culvert" is defined as the culvert between:
   a) Successive drainage structure (inlets, junction boxes, headwalls, etc.).
   b) A drainage structure and the inlet or outlet end of the culvert.
   c) The inlet and outlet end of the culvert when there are no intervening drainage structures.
4. Oval and arch shaped RCP shall not be used.
5. 1/25 OD Min, not less than 3".
6. Slurry cement backfill may be substituted for backfill in the outer bedding and haunch areas. If slurry is used the outer and middle beddings shall be omitted. Prior to installation the soil under the middle 1/3 of the outside diameter of the pipe shall be softened by scarifying or other means to a minimum depth of 1/25 OD, but not less than 3". Where slurry cement backfill is used clear distance to trench wall may be reduced as set forth in Section 19-3.062 of the Standard Specifications.
7. Backfill shall be placed full width of excavation except where dimensions are shown for backfill width or thickness. Dimensions shown are minimums.
8. Lower side shall be suitable material as determined by the Engineer. Otherwise it shall be considered unsuitable as set forth in Section 19-2.02 of the Standard Specifications. See Note 9.
9. Where the pipe is placed in a trench, if the trench walls are sloped at 5 vertical to 1 horizontal or steeper for at least 90 percent of the trench height or up to not less than 12" from the grading plane, the firmness of the soil in the lower side need not be considered.
10. Non-reinforced precast concrete pipe sizes 3'-0" or smaller may be placed under installation Types 1, 2 or 3.

STATE OF CALIFORNIA
DEPARTMENT OF TRANSPORTATION

EXCAVATION AND BACKFILL CONCRETE PIPE CULVERTS

NO SCALE

RSP A62DA DATED NOVEMBER 17, 2006 SUPERSEDES STANDARD PLAN A62DA DATED MAY 1, 2006 - PAGE 20 OF THE STANDARD PLANS BOOK DATED MAY 2006.

REVISED STANDARD PLAN RSP A62DA

2006 REVISED STANDARD PLAN RSP A62DA

10-26-06

DIST	COUNTY	ROUTE	POST MILES TOTAL PROJECT	SHEET NO.	TOTAL SHEETS
05	SLO	101	55.8/57.9	45	65

Randell D. Hiatt
REGISTERED CIVIL ENGINEER

June 6, 2008
PLANS APPROVAL DATE

REGISTERED PROFESSIONAL ENGINEER
Randell D. Hiatt
No. C50200
Exp. 6-30-09
CIVIL
STATE OF CALIFORNIA

The State of California or its officers or agents shall not be responsible for the accuracy or completeness of electronic copies of this plan sheet.

To accompany plans dated 8-23-10

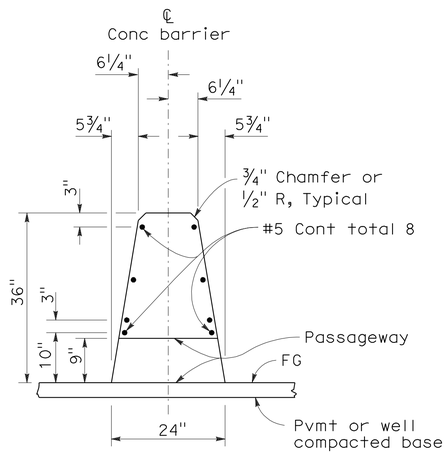

SECTION A-A
(Concrete Barrier Type 60 shown)

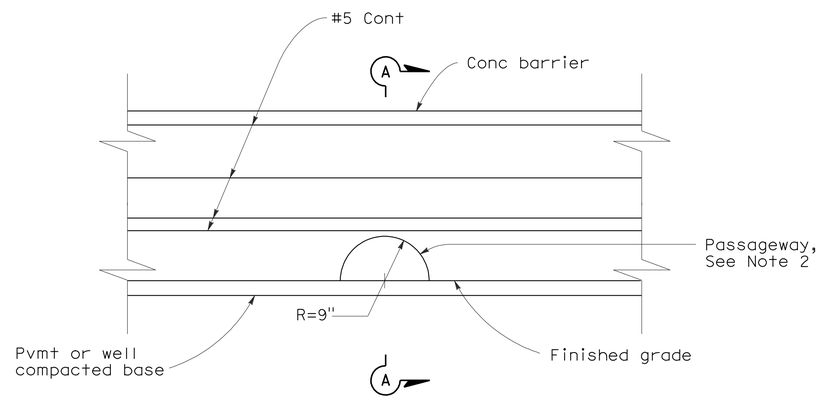

ELEVATION
(See Notes 1 and 3)

NOTES:

1. Type S Passageway typically used for crossing of small size animals.

2. At the option of the Contractor, the passageway opening shall be constructed by using either the cast-in-place method, with the allowance of the form to be left in place, or once the barrier is constructed, drilling through the barrier to create the opening.

3. See Revised Standard Plan RSP A76A for typical details of Concrete Barrier Type 60.

STATE OF CALIFORNIA
DEPARTMENT OF TRANSPORTATION

CONCRETE BARRIER WILDLIFE PASSAGEWAY (TYPE S)

NO SCALE

RSP A76J DATED JUNE 6, 2008 SUPERSEDES STANDARD PLAN A76J
DATED MAY 1, 2006 - PAGE 38 OF THE STANDARD PLANS BOOK DATED MAY 2006.

REVISED STANDARD PLAN RSP A76J

2006 REVISED STANDARD PLAN RSP A76J

DIST	COUNTY	ROUTE	POST MILES TOTAL PROJECT	SHEET NO.	TOTAL SHEETS
05	SLO	101	55.8/57.9	46	65

Glenn DeCou
REGISTERED CIVIL ENGINEER

June 5, 2009
PLANS APPROVAL DATE

REGISTERED PROFESSIONAL ENGINEER Glenn DeCou No. C34547 Exp. 9-30-09 CIVIL STATE OF CALIFORNIA

The State of California or its officers or agents shall not be responsible for the accuracy or completeness of electronic copies of this plan sheet.

To accompany plans dated 8-23-10

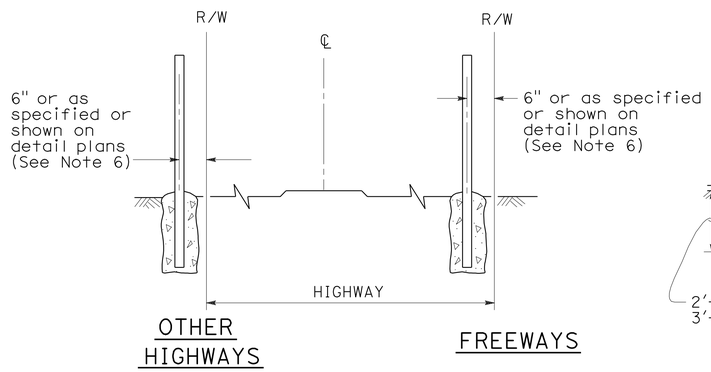

FENCE LOCATION

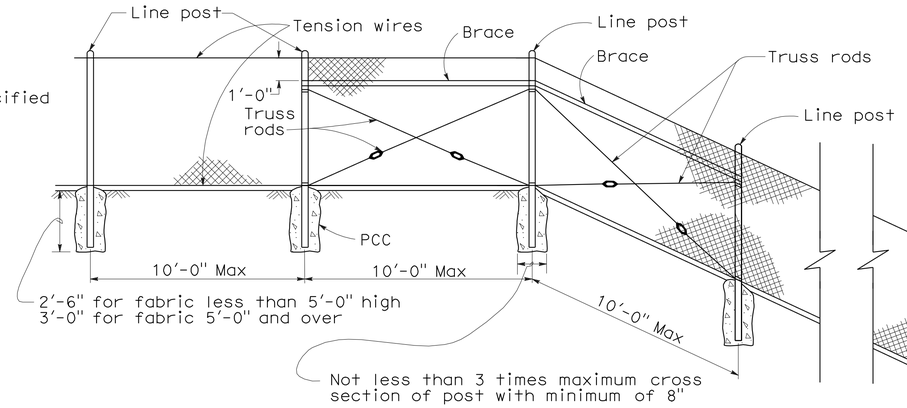

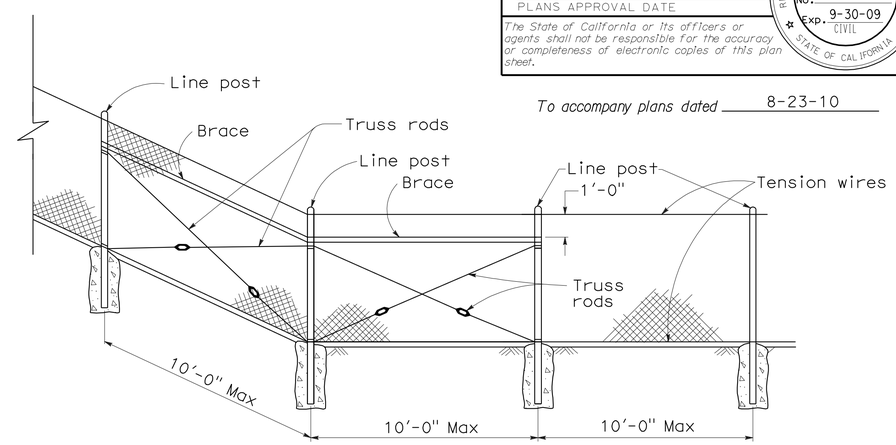

CHAIN LINK FENCE ON SHARP BREAK IN GRADE

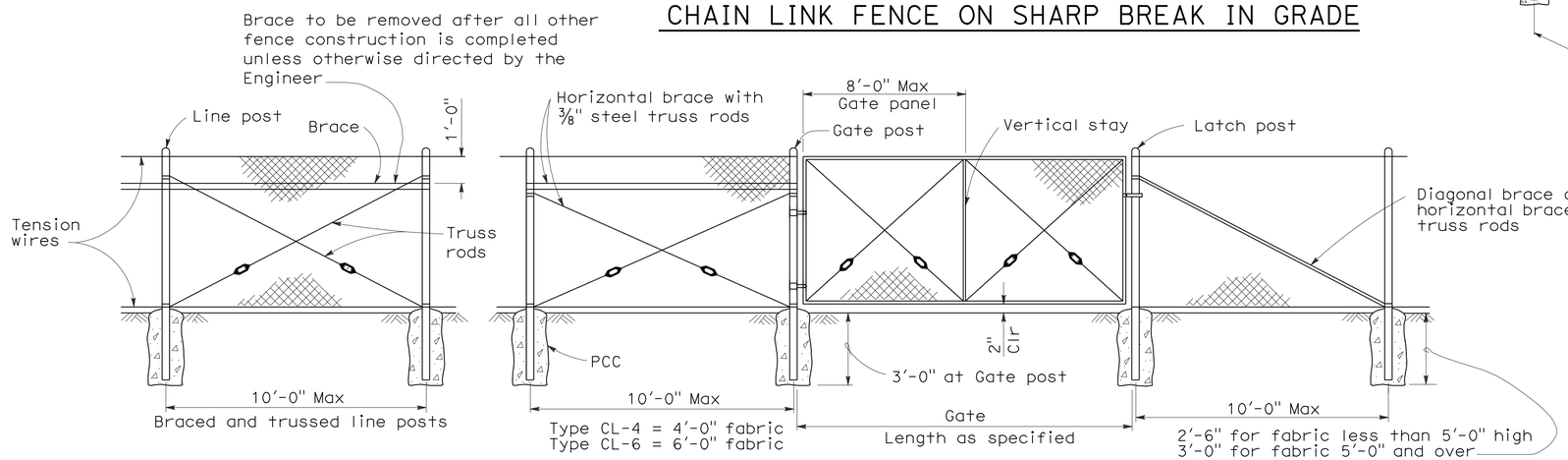

CHAIN LINK GATE INSTALLATION

GATE POST			
FENCE HEIGHT	GATE WIDTHS	NOMINAL ID	WEIGHT PER FOOT
6'-0" and Less	Up thru 6'-0"	2½"	4.95 LB
	Over 6'-0" thru 12'-0"	4"	10.79 LB
	Over 12'-0" thru 18'-0"	5"	14.62 LB
	Over 18'-0" to 24'-0" Max	6"	18.97 LB
Over 6'-0"	Up thru 6'-0"	3"	7.58 LB
	Over 6'-0" thru 12'-0"	5"	14.62 LB
	Over 12'-0" thru 18'-0"	6"	18.97 LB
	Over 18'-0" to 24'-0" Max	8"	28.55 LB

Above post dimensions and weights are minimums. Larger sizes may be used on approval of the Engineer.

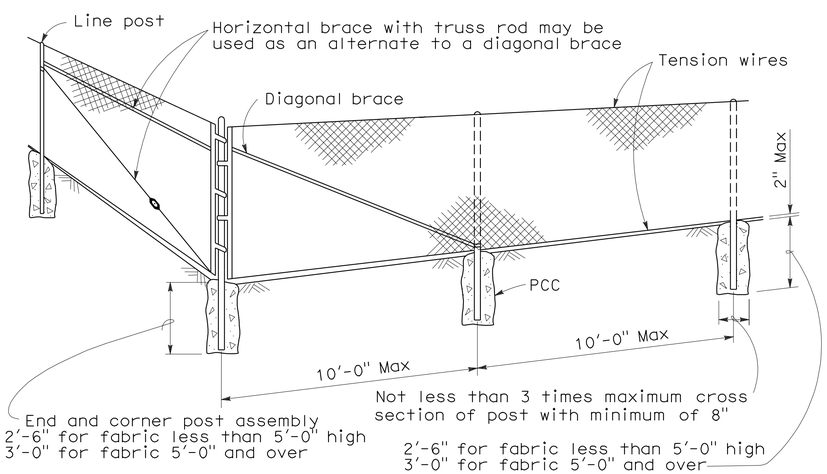

CORNER POST

NOTES:

1. The below table shows examples of post and brace sections which may comply with the Specifications.
2. Sections shown in the tables must also comply with the strength requirements and other provisions of the Specifications.
3. Other sections which comply with the strength requirements and other provisions of the Specifications may be used on approval of the Engineer.
4. Options exercised shall be uniform on any one project.
5. Dimensions shown are nominal.
6. Offset to be 2'-0" at monument locations, measured at right angles to R/W lines. Taper to achieve offset to be at least 20'-0" long.

TYPICAL MEMBER DIMENSIONS (See Notes)											
FENCE HEIGHT	LINE POSTS			END, LATCH & CORNER POSTS				BRACES			
	ROUND ID	H	ROLL FORMED	ROUND ID	ROLL FORMED			ROUND ID	H	ROLL FORMED	
6' & less	1½"	1⅞" × 1⅝"	1⅞" × 1⅝"	2"	3½" × 3½"	2" × 1¾"		1¼"	1½" × 1 5/16"	1⅝" × 1¼"	1¾" × 1¼"
Over 6'	2"	2¼" × 2"	2" × 1¾"	2½"	3½" × 3½"	2½" × 2½"		1¼"	1½" × 1 5/16"	1⅝" × 1¼"	1¾" × 1¼"

STATE OF CALIFORNIA
DEPARTMENT OF TRANSPORTATION

CHAIN LINK FENCE

NO SCALE

RSP A85 DATED JUNE 5, 2009 SUPERSEDES STANDARD PLAN A85
DATED MAY 1, 2006 - PAGE 111 OF THE STANDARD PLANS BOOK DATED MAY 2006.

REVISED STANDARD PLAN RSP A85

2006 REVISED STANDARD PLAN RSP A85

5-7-09

DIST	COUNTY	ROUTE	POST MILES TOTAL PROJECT	SHEET NO.	TOTAL SHEETS
05	SLO	101	55.8/57.9	47	65

REGISTERED CIVIL ENGINEER

June 6, 2008
PLANS APPROVAL DATE

REGISTERED PROFESSIONAL ENGINEER Raymond Don Tsztoo No. C37332 Exp. 6-30-08 CIVIL STATE OF CALIFORNIA

The State of California or its officers or agents shall not be responsible for the accuracy or completeness of electronic copies of this plan sheet.

To accompany plans dated 8-23-10

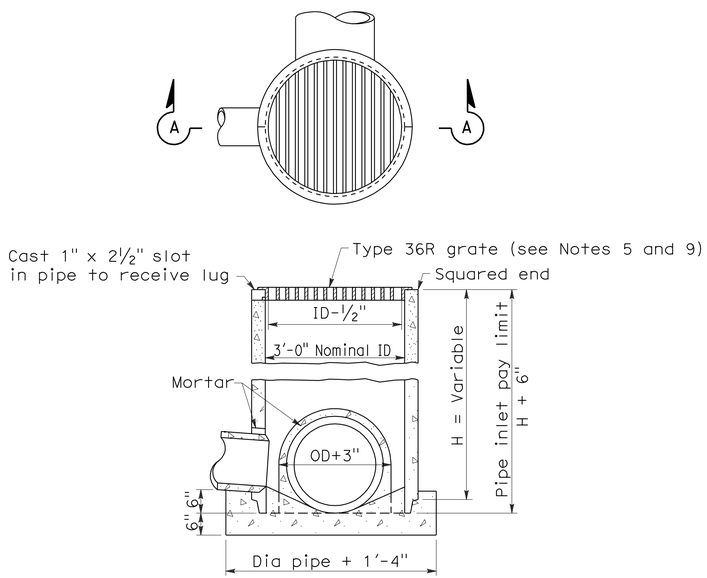

SECTION A-A

TYPE GCP

CONCRETE PIPE INLET WITH GRATE

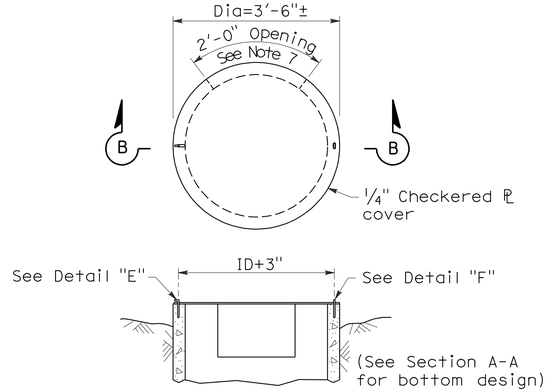

SECTION B-B

TYPE OCP or OCPI

CONCRETE PIPE INLET WITH STEEL COVER
(See Note 6)

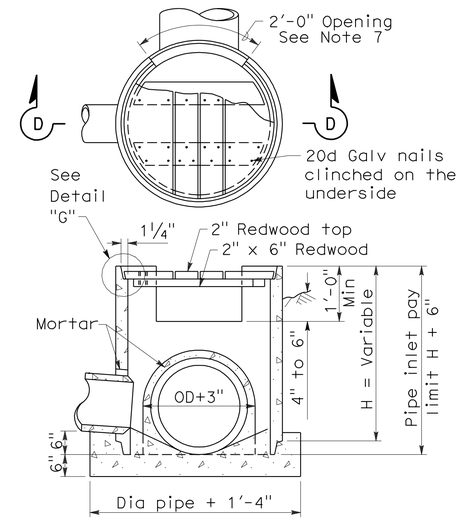

SECTION D-D

TYPE OCP or OCPI

CONCRETE PIPE INLET WITH REDWOOD COVER
(See Notes 6 and 10)

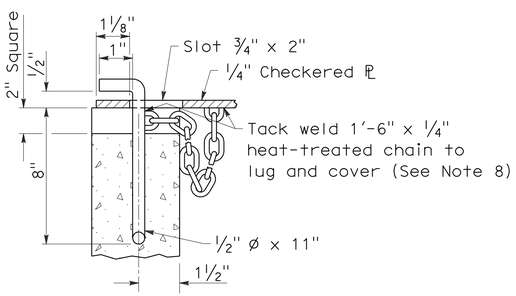

DETAIL "E"

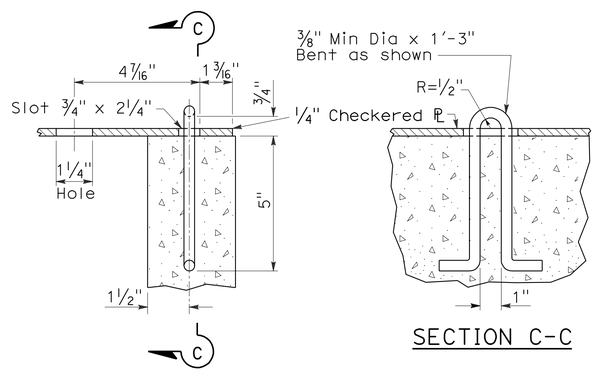

DETAIL "F"

SECTION C-C

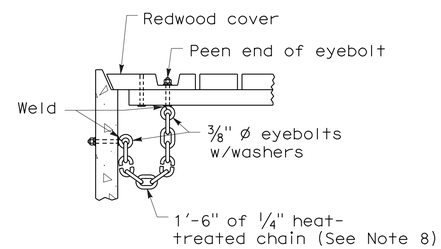

DETAIL "G"

NOTES:

1. For details of steel pipe inlets, see Standard Plan D75A.
2. For details of ladder and steps and when ladder or steps are required, see Standard Plan D75C.
3. Inlet pipes shall not protrude into basin.
4. Except for inlets used for junction boxes, basin floors shall have minimum slope of 4:1 from all directions toward outlet pipe, and a wood trowel finish.
5. See Revised Standard Plan RSP D77A and Standard Plan D77B for Grate and Frame Details and Weights of Miscellaneous Iron and Steel.
6. Designation of Type OCPI pipe inlets on plans indicates trash racks are to be furnished and installed on all side openings. See Standard Plan D75C for Trash Rack details.
7. More than one side opening may be required. Location and number as ordered by the Engineer. Opening may be cast in pipe.
8. Chain to be provided when specified.
9. Place pipe so bars of grate will be parallel with main surface flow.
10. Redwood covers shall only be placed at locations designated on the plans.

STATE OF CALIFORNIA
DEPARTMENT OF TRANSPORTATION

CONCRETE PIPE INLETS

NO SCALE

RSP D75B DATED JUNE 6, 2008 SUPERSEDES STANDARD PLAN D75B
DATED MAY 1, 2006 - PAGE 153 OF THE STANDARD PLANS BOOK DATED MAY 2006.

REVISED STANDARD PLAN RSP D75B

2006 REVISED STANDARD PLAN RSP D75B

5-20-08

DIST	COUNTY	ROUTE	POST MILES TOTAL PROJECT	SHEET NO.	TOTAL SHEETS
05	SLO	101	55.8/57.9	48	65

Raymond Don Tsztoo
REGISTERED CIVIL ENGINEER

January 18, 2008
PLANS APPROVAL DATE

REGISTERED PROFESSIONAL ENGINEER
Raymond Don Tsztoo
No. C37332
Exp. 6-30-08
CIVIL
STATE OF CALIFORNIA

The State of California or its officers or agents shall not be responsible for the accuracy or completeness of electronic copies of this plan sheet.

To accompany plans dated 8-23-10

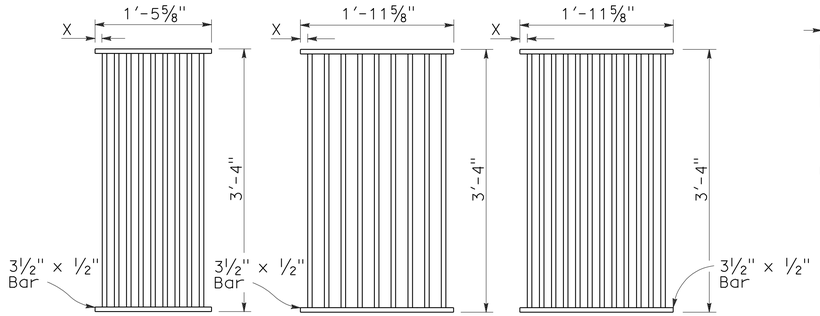

TYPE 18-9

1⅜" Clear spacing. Use within the roadbed on highways where bicycles and pedestrians are excluded.

TYPE 24-9

2" Clear spacing. Use in locations off the roadbed on all types of highways.

TYPE 24-12

1⅜" Clear spacing. Use within the roadbed on highways where bicycles and pedestrians are excluded.

RECTANGULAR GRATE DETAILS

(See table below)

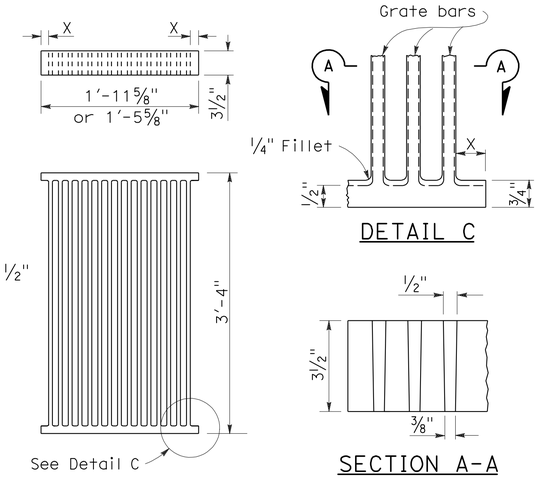

DETAIL C

SECTION A-A

ALTERNATIVE CAST NODULAR IRON GRATE OR CAST STEEL GRATE

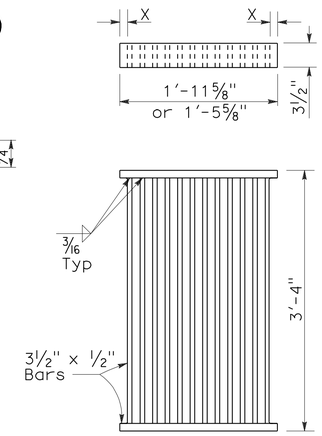

ALTERNATIVE WELDED GRATE

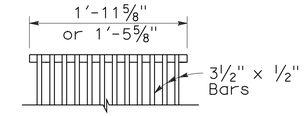

CAST END BLOCK

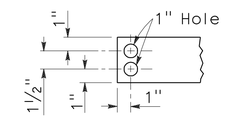

END OF BAR

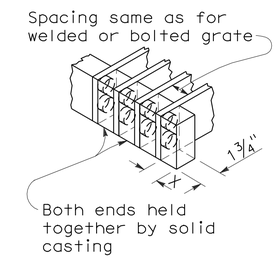

ALTERNATIVE CAST NODULAR IRON OR CAST STEEL END BLOCK GRATE

NOTES:

1. Grate type numbers refer to approximate width of grate in inches and number of bars, respectively.
2. Contractor has the option of using cast nodular iron, cast steel, welded, bolted, or cast end block grate.
3. See Special Provisions for requirements pertaining to galvanizing or asphalt dipping of grates and frames.
4. Rounded top of bars optional on all grates.
5. Pipe inlets with a grate shall be placed so that bars parallel direction of principle surface flow.
6. Full penetration butt welds may be substituted for the fillet welds on all anchors.
7. Standard square, hexagon, round or equivalent headed anchors may be substituted for the right angle hooks on the anchors shown on this plan.
8. Grate and frame weights are based on welded grates (weights of face angles, steps, protection bars, etc. are not included).

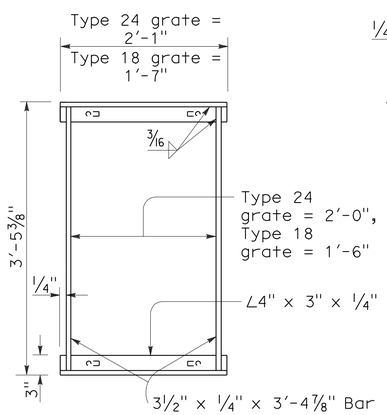

TYPICAL FRAME

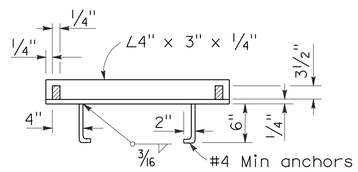

CROSS SECTION

(Thru frame)

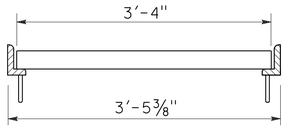

LONGITUDINAL SECTION

(Thru frame and grate)

RECTANGULAR FRAME DETAILS

(For all rectangular grates)

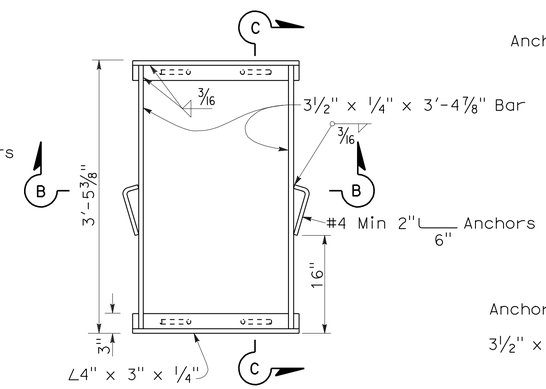

TYPICAL FRAME

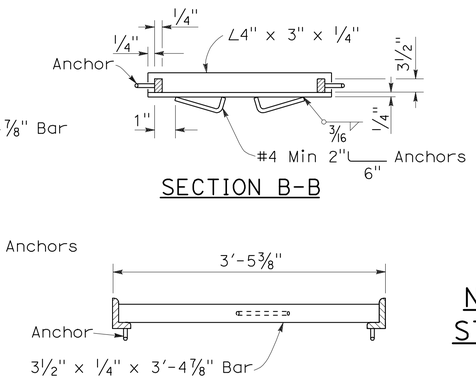

SECTION B-B

SECTION C-C

ALTERNATIVE ANCHOR FOR RECTANGULAR FRAME

(For details not shown, See Rectangular Frame Details)

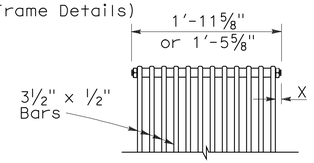

BOLTED END BLOCK

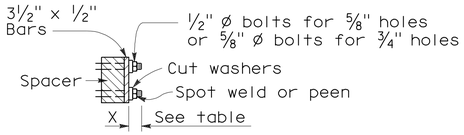

BOLTING DETAIL

ALTERNATIVE BOLTED GRATE

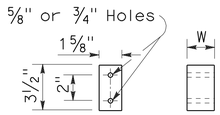

BAR SPACER

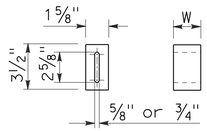

ALTERNATIVE SPACER

W = 1⅜" or 2"

GRATE BAR SPACING TABLE

TYPE	No. OF BARS	CLEAR BAR SPACING	X
18-9	9	1⅜"	1 1/16"
24-9	9	2"	1 9/16"
24-12	12	1⅜"	1¼"

INLET TYPE	COVER TYPE	WEIGHT LB
OS	PLATE	174
OL-7	PLATE	170
OL-10	PLATE	170
OL-14	PLATE	170
OL-21	PLATE	170
OCP	PLATE	112
OCPI	PLATE	112
OCPI	REDWOOD	42
OMP	PLATE	177
OMPI	PLATE	177

INLET TYPE	GRATE TYPE	No. OF GRATES	WEIGHT LB
GDO	24-12	2	634
GOL-7	24-12	1	326
GOL-10	24-12	1	326
GO,G1,G2,G3,G4 (TYPE 24)	24-9	1	263
	24-12	1	326
G4 (TYPE 18),G5,G6	18-9	1	249
GT1	18-9	2	498
GT2	18-9	2	498
GT3	24-12	2	652
GT4	24-12	2	652
TRASH RACK			22

BASIS FOR MISC IRON & STEEL FINAL PAY WEIGHTS FOR DRAINAGE INLETS

(See General Notes, No 8)

STATE OF CALIFORNIA
DEPARTMENT OF TRANSPORTATION

GRATE DETAILS

NO SCALE

RSP D77A DATED JANUARY 18, 2008 SUPERSEDES STANDARD PLAN D77A DATED MAY 1, 2006 - PAGE 155 OF THE STANDARD PLANS BOOK DATED MAY 2006.

REVISED STANDARD PLAN RSP D77A

2006 REVISED STANDARD PLAN RSP D77A

12-14-07

DIST	COUNTY	ROUTE	POST MILES TOTAL PROJECT	SHEET NO.	TOTAL SHEETS
05	SLO	101	55.8/57.9	49	65

LICENSED LANDSCAPE ARCHITECT

June 5, 2009
PLANS APPROVAL DATE

The State of California or its officers or agents shall not be responsible for the accuracy or completeness of electronic copies of this plan sheet.

LICENSED LANDSCAPE ARCHITECT — Gregory A. Balzer 2016 — 10 (Renewal) 2-28-11 (Renewal) Date 5-14-09 Date — STATE OF CALIFORNIA

To accompany plans dated 8-23-10

A

AB	aggregate base
ABS	acrylonitrile-butadiene-styrene
AC	asphalt concrete
Adj	adjacent/adjustable
AIC	auxiliary irrigation controller
Alt	alternative
AMEND	amendment
ARV	air release valve
AUTO	automatic
AUX	auxiliary
AVB	atmospheric vacuum breaker

B

B&B	balled and burlapped
B/B	brass/bronze
B/B/PL	brass/bronze/plastic
B/PL	brass/plastic
BFM	bonded fiber matrix
Bit Ctd	bituminous coated
BP	booster pump
BPA	backflow preventer assembly
BPAE	backflow preventer assembly in enclosure
BPE	backflow preventer enclosure
BV	ball valve

C

CAP	corrugated aluminum pipe
CARV	combination air release valve
CCA	cam coupler assembly
CEC	controller enclosure cabinet
CHDPE	corrugated high density polyethylene
CL	chain link
CNC	control and neutral conductors
Conc	concrete
Cond	conduit
CSP	corrugated steel pipe
CST	center strip
CV	check valve

D

Dia	diameter
DIP	ductile iron pipe
DN	diameter nominal

E

EA	each
Elect	electric/electrical
Elev	elevation
ENCL	enclosure
EP	edge of pavement
ES	edge of shoulder
EST	end strip
ESTB	establishment
ETW	edge of traveled way

F

F	full circle
F/P	full/part circle
FAU	filter assembly unit
FCV	flow control valve
FERT	fertilizer
FG	finished grade
FIPT	female iron pipe thread
FIS	fertilizer injector system
FL	flow line
FM	flow monitor
FS	flow sensor
Ft	foot/feet
FV	flush valve

G

GAL	Gallon(s)
Galv	galvanized
GARV	garden valve
GPH	gallons per hour
GPM	gallons per minute
GSP	galvanized steel pipe
GV	gate valve

H

H	half circle
HB	hose bib
HDPE	high density polyethylene
HP	horsepower/hinge point
HPL	high pressure line
Hwy	highway

I

IC	irrigation controller
ICC	irrigation controller(s) in controller enclosure cabinet
ID	inside diameter
In	inches
IFS	irrigation filtration system
IPS	iron pipe size
IPT	iron pipe thread
Irr	irrigation

L

L	length
LF	linear foot

M

Max	maximum
MBGR	metal beam guard railing
MCV	manual control valve
MIC	master irrigation controller
Min	minimum
MIPT	male iron pipe thread
Misc	miscellaneous
Mtl	material
MVP	maintenance vehicle pullout

N

NCN	no common name
NL	nozzle line
No.	number
NPT	national pipe thread

O

O/C	on center
OD	outside diameter
Oz	ounce

P

P	part circle
PB	pull box
PCC	portland cement concrete
PE	polyethylene
Pkt	packet
PL	plastic
PLT	plant/planting
PLT ESTB	plant establishment
PM	post mile
PR	pressure rated
PRLV	pressure relief valve
PSFM	polymer stabilized fiber matrix
PSI	pounds per square inch
PRV	pressure reducing valve
PVC	polyvinyl chloride
Pvmt	pavement

Q

Q	quarter circle
QCV	quick coupling valve

R

R	radius
RCP	reinforced concrete pipe
RCV	remote control valve
RCVM	remote control valve (master)
RCVMF	remote control valve (master) w/ flow meter
RCW	recycled/reclaimed water
RECP	rolled erosion control product
REQ	required
R/W	right of way

S

S	slip
SCC	sprinkler control conduit
SCH	schedule
SF	state-furnished
Shld	shoulder
SQFT	square foot/feet
SQYD	square yard(s)
SST	side strip
Sta	station
Std	standard
SW	sidewalk/sound wall

T

T	third circle/thread
TLS	truck loading standpipe
TQ	three quarter circle
TRM	turf reinforcement mat
TRVD	traveled
TT	two third circle
Typ	typical

U

UG	underground

V

VAU	valve assembly unit

W

W	width
W/	with
WM	water meter
WS	wye strainer
WSP	welded steel pipe
WWM	welded wire mesh

NOTE:

FOR ADDITIONAL ABBREVIATIONS, SEE STANDARD PLANS A10A AND A10B.

STATE OF CALIFORNIA
DEPARTMENT OF TRANSPORTATION

PLANTING AND IRRIGATION ABBREVIATIONS

NO SCALE

RSP H1 DATED JUNE 5, 2009 SUPERSEDES STANDARD PLAN H1 DATED MAY 1, 2006 - PAGE 201 OF THE STANDARD PLANS BOOK DATED MAY 2006.

REVISED STANDARD PLAN RSP H1

2006 REVISED STANDARD PLAN RSP H1

DIST	COUNTY	ROUTE	POST MILES TOTAL PROJECT	SHEET NO.	TOTAL SHEETS
05	SLO	101	55.8/57.9	50	65

LICENSED LANDSCAPE ARCHITECT

June 5, 2009
PLANS APPROVAL DATE

The State of California or its officers or agents shall not be responsible for the accuracy or completeness of electronic copies of this plan sheet.

LICENSED LANDSCAPE ARCHITECT — Gregory A. Balzer — 2016 — 10 Expiration Date — 2-28-11 Renewal Date — 5-14-09 Date — STATE OF CALIFORNIA

To accompany plans dated 8-23-10

EXISTING	PROPOSED	ITEM DESCRIPTION
		WATER METER (WM)
		BACKFLOW PREVENTER ASSEMBLY (BPA)
		BACKFLOW PREVENTER ASSEMBLY IN ENCLOSURE (BPAE)
		BACKFLOW PREVENTER ENCLOSURE (BPE)
		BOOSTER PUMP (BP)
		TRUCK LOADING STANDPIPE (TLS)
FS	FS	FLOW SENSOR (FS)
X	X	MASTER IRRIGATION CONTROLLER (MIC)
		AUXILIARY IRRIGATION CONTROLLER (AIC)
		IRRIGATION CONTROLLER (IC)/ IRRIGATION CONTROLLER (IC) (BATTERY) IRRIGATION CONTROLLER (IC) (SOLAR)
		IRRIGATION CONTROLLER(S) IN CONTROLLER ENCLOSURE CABINET (ICC)
		CONTROL AND NEUTRAL CONDUCTORS (CNC)
SCC	SCC	SPRINKLER CONTROL CONDUIT (SCC)
		IRRIGATION CROSSOVER
		EXTEND IRRIGATION CROSSOVER
		IRRIGATION SLEEVE
dip	DIP	DUCTILE IRON PIPE (SUPPLY LINE) (MAIN) (DIP)
		GALVANIZED STEEL PIPE (SUPPLY LINE) (MAIN) (GSP)
		GALVANIZED STEEL PIPE (SUPPLY LINE) (LATERAL) (GSP)
		PLASTIC PIPE (PR 200) (SUPPLY LINE) (MAIN)
		PLASTIC PIPE (PR 200) (SUPPLY LINE) (LATERAL)
		PLASTIC PIPE (IRRIGATION LINE)
		REMOTE CONTROL VALVE (RCV) REMOTE CONTROL VALVE (MASTER) (RCVM) REMOTE CONTROL VALVE (MASTER) W/FLOW METER (RCVMF)
		MANUAL CONTROL VALVE (MCV)
		VALVE ASSEMBLY UNIT (VAU)
		WYE STRAINER (WS)
		FILTER ASSEMBLY UNIT (FAU)
		GATE VALVE (GV)
		BALL VALVE (BV)

EXISTING	PROPOSED	ITEM DESCRIPTION
		QUICK COUPLING VALVE (QCV)
		CAM COUPLER ASSEMBLY (CCA)
		PRESSURE REDUCING VALVE (PRV)
		PRESSURE RELIEF VALVE (PRLV)
		FLOW CONTROL VALVE (FCV)
		COMBINATION AIR RELEASE VALVE (CARV)
		CHECK VALVE (CV)
		FLUSH VALVE (FV)
		NOZZLE LINE W/TURNING UNION
		IRRIGATION SYSTEM
		IRRIGATION SYSTEM TO BE REMOVED
		CHAIN LINK GATE
		QUICK COUPLING VALVE W/SPRINKLER PROTECTOR
3	3	SPRINKLER W/SPRINKLER PROTECTOR
	C	CONNECT TO EXISTING SYSTEM
		CAP
		CAP EXISTING

VALVE CODE

RCV SIZE
IRRIGATION CONTROLLER
CONTROLLER STATION
VALVE IN PARALLEL (IF APPLICABLE)
GPM
QUANTITY OF SPRINKLERS (WHEN SHOWN)

* 2½"-A-2b-40 -60

MCV SIZE
VALVE NUMBER
GPM
QUANTITY OF TYPE SPRINKLERS (WHEN SHOWN)

* 2"-3-30 -50

* VALVE CODES FOR EXISTING VALVES ARE SHOWN IN A DASHED ENCLOSURE.

STATE OF CALIFORNIA
DEPARTMENT OF TRANSPORTATION

PLANTING AND IRRIGATION SYMBOLS

NO SCALE

RSP H2 DATED JUNE 5, 2009 SUPERSEDES RSP H2 DATED MARCH 7, 2008 AND STANDARD PLAN H2 DATED MAY 1, 2006 - PAGE 202 OF THE STANDARD PLANS BOOK DATED MAY 2006.

REVISED STANDARD PLAN RSP H2

2006 REVISED STANDARD PLAN RSP H2

5-11-09

DIST	COUNTY	ROUTE	POST MILES TOTAL PROJECT	SHEET NO.	TOTAL SHEETS
05	SLO	101	55.8/57.9	51	65

Gregory A. Balzer
LICENSED LANDSCAPE ARCHITECT

June 5, 2009
PLANS APPROVAL DATE

LICENSED LANDSCAPE ARCHITECT
Gregory A. Balzer 2576
10 Expiration
2-28-11
Renewal Date
5-14-09
Date
STATE OF CALIFORNIA

The State of California or its officers or agents shall not be responsible for the accuracy or completeness of electronic copies of this plan sheet.

To accompany plans dated 8-23-10

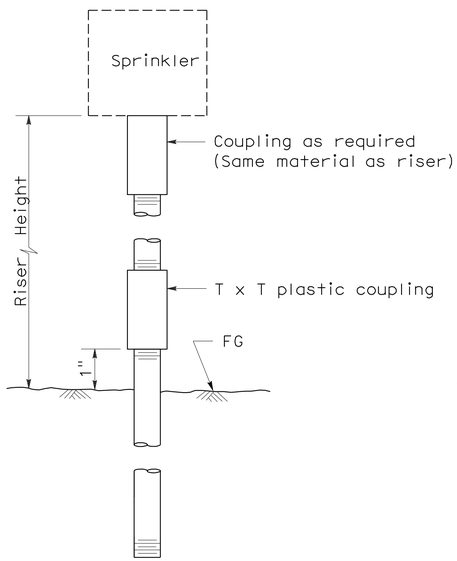

ELEVATION
RISER TYPE I

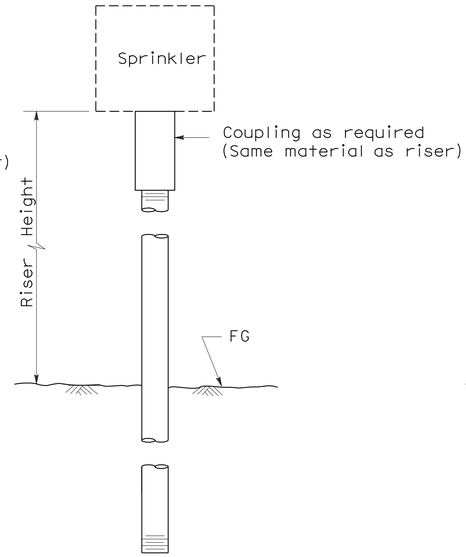

ELEVATION
RISER TYPE II

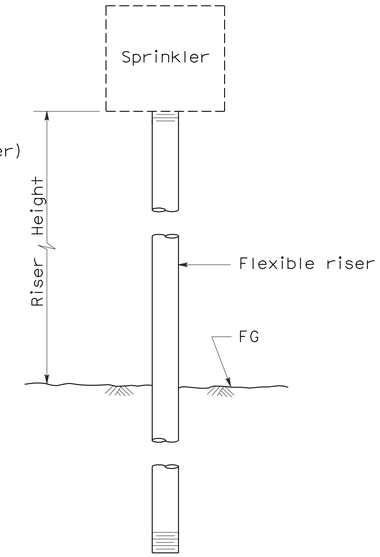

ELEVATION
RISER TYPE III

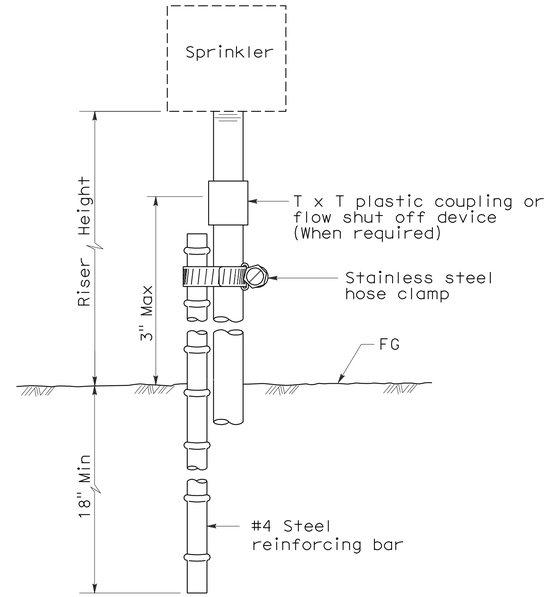

ELEVATION
RISER TYPE IV

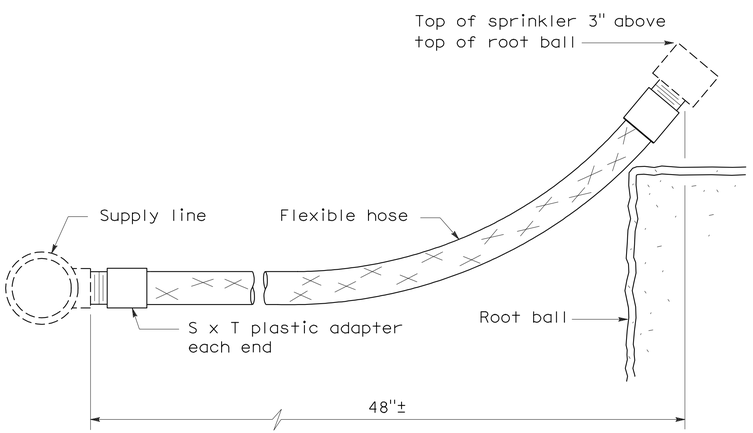

ELEVATION
RISER TYPE V

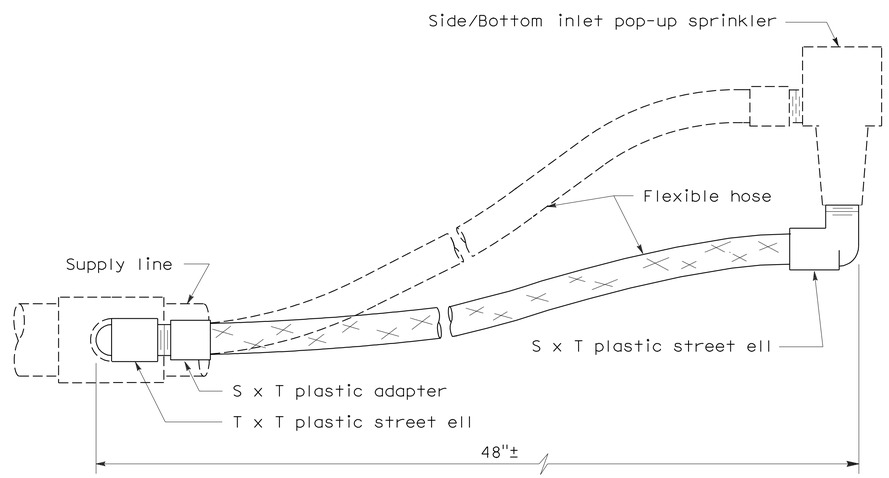

ELEVATION
RISER TYPE VI

STATE OF CALIFORNIA
DEPARTMENT OF TRANSPORTATION

PLANTING AND IRRIGATION DETAILS

NO SCALE

RSP H5 DATED JUNE 5, 2009 SUPERSEDES STANDARD PLAN H5
DATED MAY 1, 2006 - PAGE 205 OF THE STANDARD PLANS BOOK DATED MAY 2006.

REVISED STANDARD PLAN RSP H5

2006 REVISED STANDARD PLAN RSP H5

5-28-09

DIST	COUNTY	ROUTE	POST MILES TOTAL PROJECT	SHEET NO.	TOTAL SHEETS
05	SLO	101	55.8/57.9	52	65

LICENSED LANDSCAPE ARCHITECT

June 5, 2009
PLANS APPROVAL DATE

The State of California or its officers or agents shall not be responsible for the accuracy or completeness of electronic copies of this plan sheet.

LICENSED LANDSCAPE ARCHITECT Gregory A. Balzer 2576 STATE OF CALIFORNIA
9-10 Renewal
2-28-11 Renewal Date
5-14-09 Date

To accompany plans dated 8-23-10

2006 REVISED STANDARD PLAN RSP H7

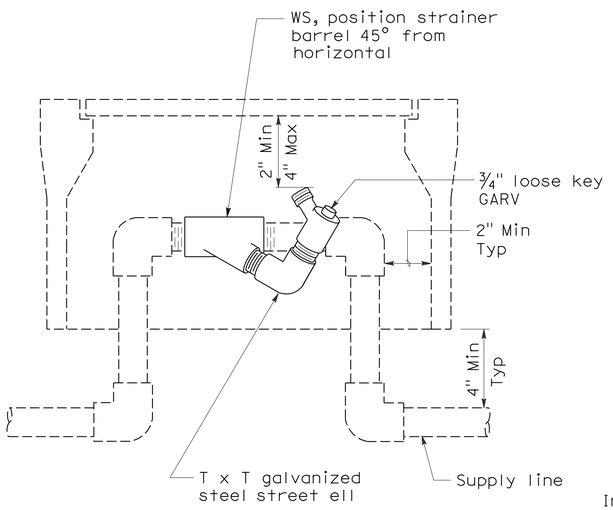

ELEVATION
WYE STRAINER

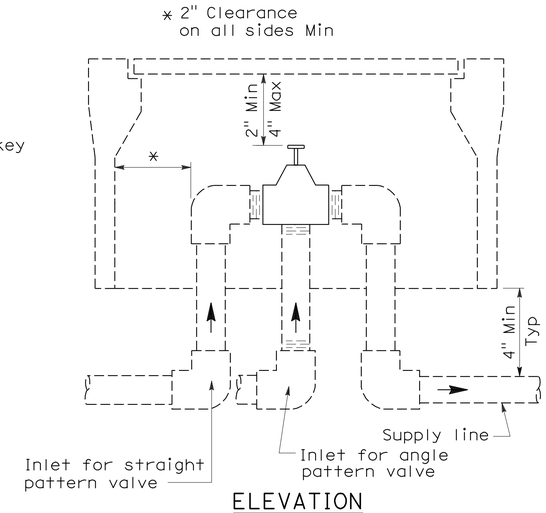

ELEVATION
VALVE

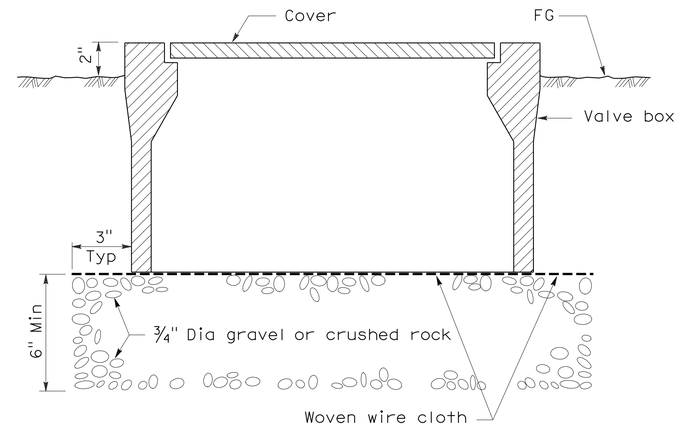

SECTION
VALVE BOX

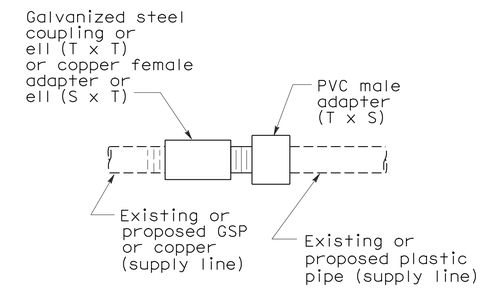

PLAN
GALVANIZED OR COPPER PIPE CONNECTION TO PLASTIC PIPE

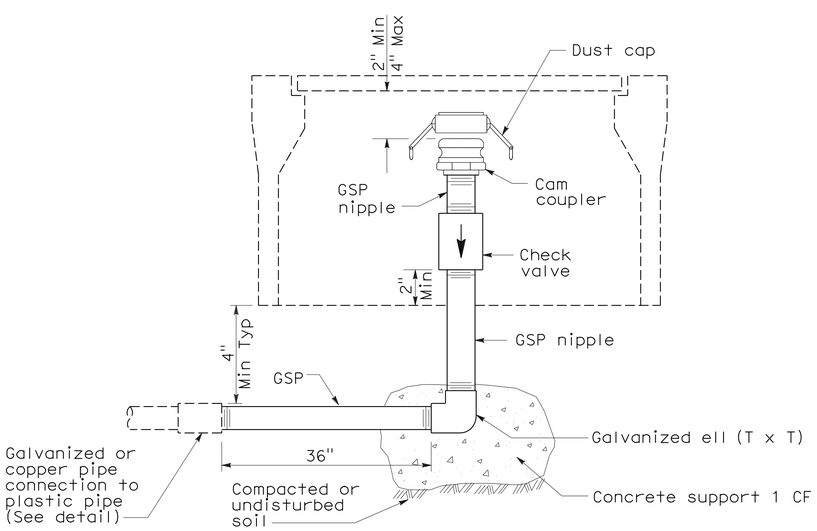

ELEVATION
CAM COUPLER ASSEMBLY

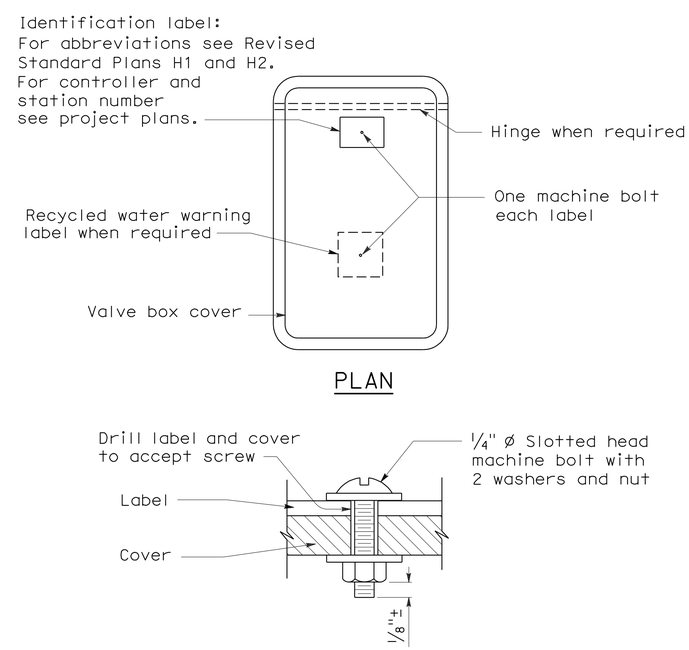

PLAN

SECTION
VALVE BOX IDENTIFICATION

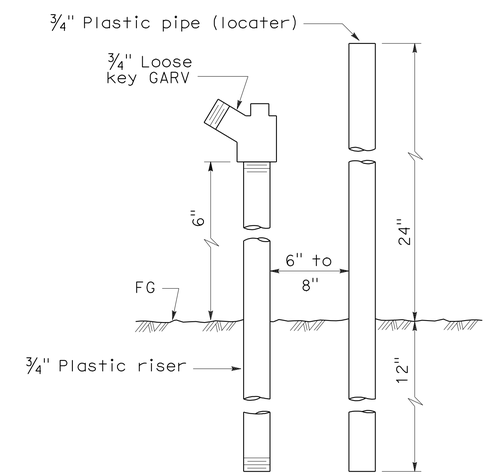

ELEVATION
FLUSH VALVE

STATE OF CALIFORNIA
DEPARTMENT OF TRANSPORTATION

PLANTING AND IRRIGATION DETAILS

NO SCALE

RSP H7 DATED JUNE 5, 2009 SUPERSEDES STANDARD PLAN H7
DATED MAY 1, 2006 - PAGE 207 OF THE STANDARD PLANS BOOK DATED MAY 2006.

REVISED STANDARD PLAN RSP H7

5-28-09

DIST	COUNTY	ROUTE	POST MILES TOTAL PROJECT	SHEET NO.	TOTAL SHEETS
05	SLO	101	55.8/57.9	53	65

Randell D. Hiatt
REGISTERED CIVIL ENGINEER

June 6, 2008
PLANS APPROVAL DATE

REGISTERED PROFESSIONAL ENGINEER
Randell D. Hiatt
No. C50200
Exp. 6-30-09
CIVIL
STATE OF CALIFORNIA

The State of California or its officers or agents shall not be responsible for the accuracy or completeness of electronic copies of this plan sheet.

To accompany plans dated 8-23-10

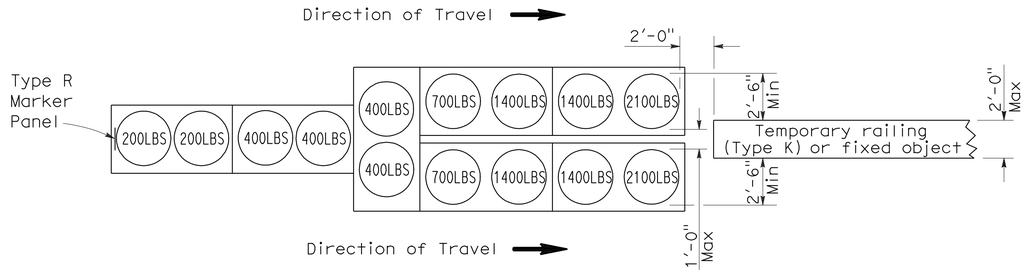

ARRAY 'TU14'

Approach speed 45 mph or more

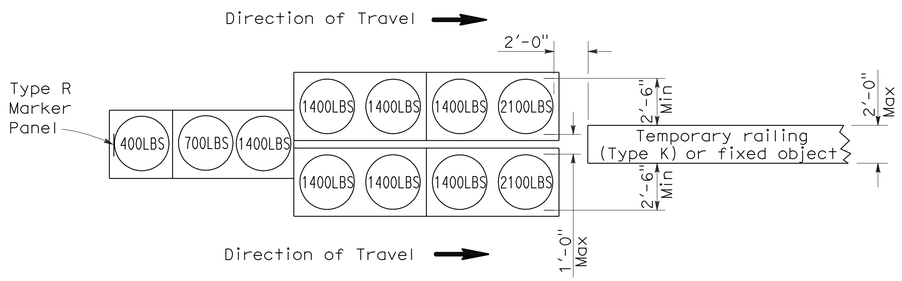

ARRAY 'TU11'

Approach speed less than 45 mph

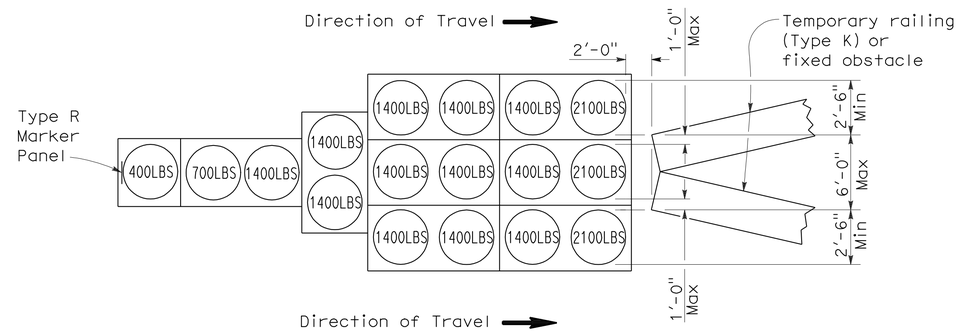

ARRAY 'TU17'

Approach speed less than 45 mph

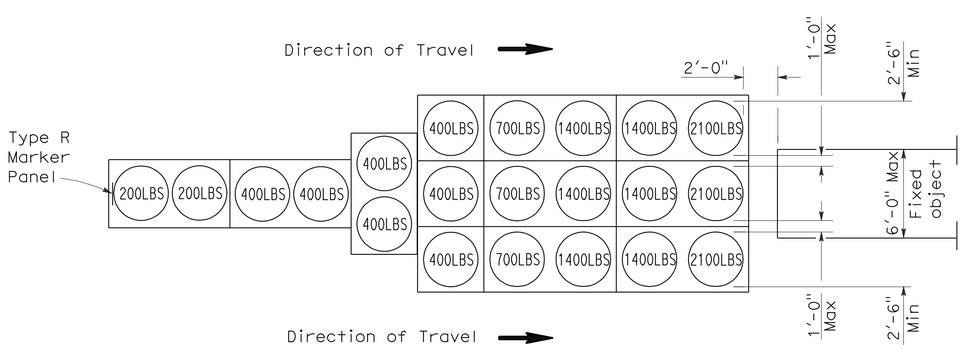

ARRAY 'TU21'

Approach speed 45 mph or more

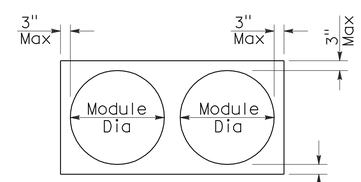

PLAN

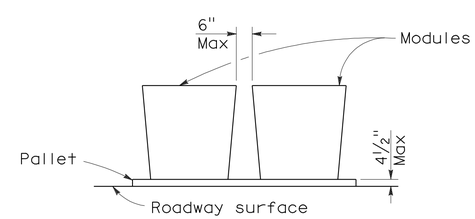

ELEVATION

CRASH CUSHION PALLET DETAIL

See Note 7

NOTES:

1. (XXX) Indicates sand filled module location and weight of sand in pounds for each module. Module spacing is based on the greater diameter of the module.
2. All sand weights are nominal.
3. Temporary crash cushion arrays shall not encroach on the traveled way.
4. Place the top of Type R marker panel 1" below the module lid.
5. Refer to Standard Plan A73B for marker details.
6. Approach speeds indicated conform to NCHRP 350 Report criteria.
7. Use of pallets is optional.

STATE OF CALIFORNIA
DEPARTMENT OF TRANSPORTATION

TEMPORARY CRASH CUSHION, SAND FILLED (UNIDIRECTIONAL)

NO SCALE

RSP T1A DATED JUNE 6, 2008 SUPERSEDES STANDARD PLAN T1A
DATED MAY 1, 2006 - PAGE 211 OF THE STANDARD PLANS BOOK DATED MAY 2006.

REVISED STANDARD PLAN RSP T1A

2006 REVISED STANDARD PLAN RSP T1A

DIST	COUNTY	ROUTE	POST MILES TOTAL PROJECT	SHEET NO.	TOTAL SHEETS
05	SLO	101	55.8/57.9	54	65

Randell D. Hiatt
REGISTERED CIVIL ENGINEER

June 6, 2008
PLANS APPROVAL DATE

REGISTERED PROFESSIONAL ENGINEER
Randell D. Hiatt
No. C50200
Exp. 6-30-09
CIVIL
STATE OF CALIFORNIA

The State of California or its officers or agents shall not be responsible for the accuracy or completeness of electronic copies of this plan sheet.

To accompany plans dated 8-23-10

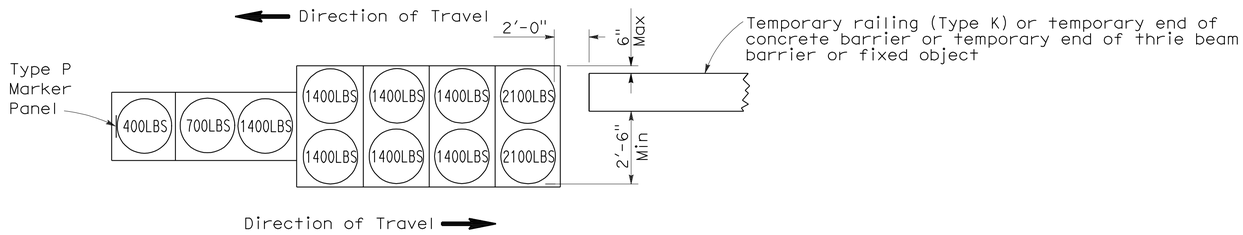

ARRAY 'TB11'

Approach speed less than 45 mph

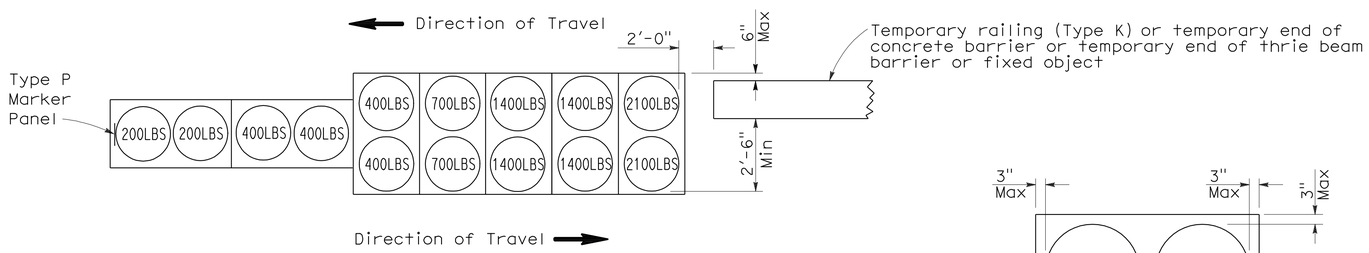

ARRAY 'TB14'

Approach speed 45 mph or more

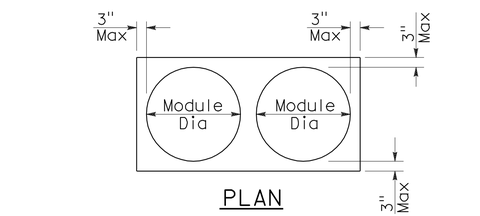

PLAN

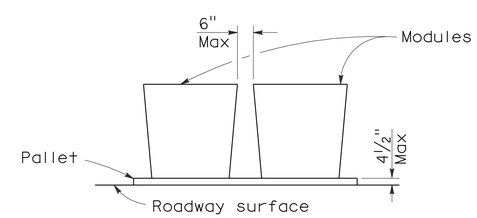

ELEVATION

CRASH CUSHION PALLET DETAIL

See Note 7

NOTES:

1. (XXX) Indicates sand filled module location and weight of sand in pounds for each module. Module spacing is based on the greater diameter of the module.
2. All sand weights are nominal.
3. Temporary crash cushion arrays shall not encroach on the traveled way.
4. Place the Type P marker panel so that the bottom of the panel rests upon the pallet.
5. Refer to Standard Plan A73B for marker details.
6. Approach speeds indicated conform to NCHRP 350 Report criteria.
7. Use of pallets is optional.

STATE OF CALIFORNIA
DEPARTMENT OF TRANSPORTATION

TEMPORARY CRASH CUSHION, SAND FILLED (BIDIRECTIONAL)

NO SCALE

RSP T1B DATED JUNE 6, 2008 SUPERSEDES STANDARD PLAN T1B
DATED MAY 1, 2006 - PAGE 212 OF THE STANDARD PLANS BOOK DATED MAY 2006.

REVISED STANDARD PLAN RSP T1B

2006 REVISED STANDARD PLAN RSP T1B

5-15-08

DIST	COUNTY	ROUTE	POST MILES TOTAL PROJECT	SHEET NO.	TOTAL SHEETS
05	SLO	101	55.8/57.9	55	65

Randell D. Hiatt
REGISTERED CIVIL ENGINEER

June 6, 2008
PLANS APPROVAL DATE

REGISTERED PROFESSIONAL ENGINEER
Randell D. Hiatt
No. C50200
Exp. 6-30-09
CIVIL
STATE OF CALIFORNIA

The State of California or its officers or agents shall not be responsible for the accuracy or completeness of electronic copies of this plan sheet.

To accompany plans dated 8-23-10

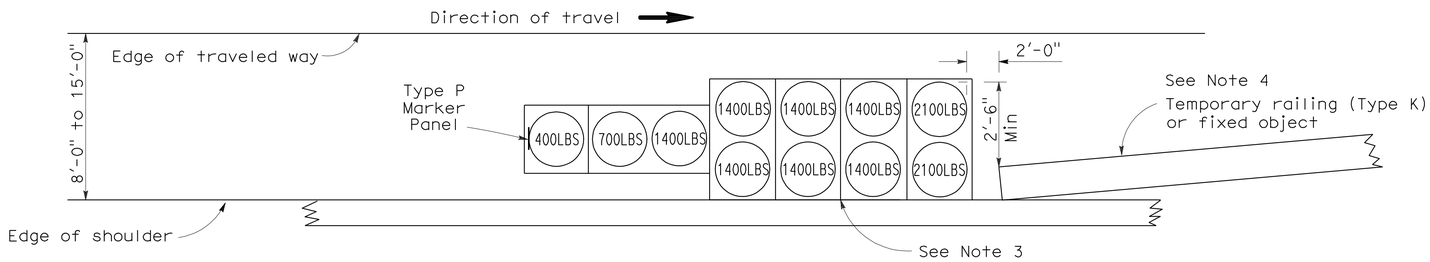

ARRAY 'TS11'

Approach speed less than 45 mph
See Note 9

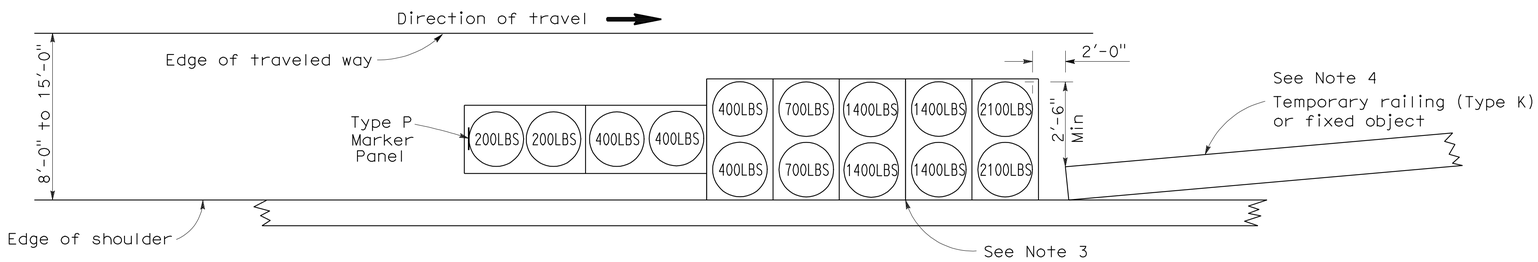

ARRAY 'TS14'

Approach speed 45 mph or more
See Note 9

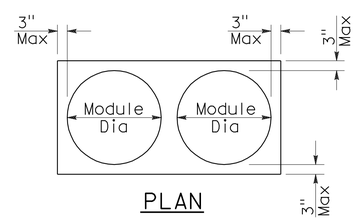

PLAN

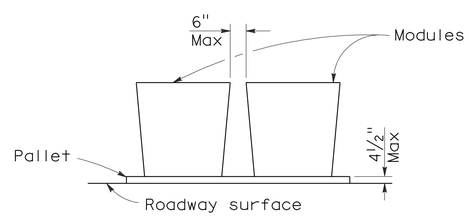

ELEVATION

CRASH CUSHION PALLET DETAIL

See Note 11

NOTES:

1. (XXX) Indicates sand filled module location and weight of sand in pounds for each module. Module spacing is based on the greater diameter of the module.
2. All sand weights are nominal.
3. The temporary crash cushion arrays shown on this plan shall be used only in locations where there will be traffic on one side of the temporary crash cushion array.
4. If the fixed object or approach end of the temporary railing is less than 15'-0" from the edge of traveled way, a temporary crash cushion is required in a construction or work zone.
5. Temporary crash cushion arrays shall not encroach on the traveled way.
6. Arrays for median shoulders shall conform to details shown on this plan for outside shoulders.
7. Place the Type P marker panel so that the bottom of the panel rests upon the pallet and faces traffic.
8. Refer to Standard Plan A73B for marker details.
9. For shoulder widths less than 8'-0", appropriate approved crash cushion protection, other than sand filled modules, shall be provided at fixed objects and at approach ends of temporary railing. The specific type of crash cushion shall be as shown on the project plans or as specified in the Special Provisions, or if not shown on the project plans or specified in the Special Provisions, shall be as approved by the Engineer.
10. Approach speeds indicated conform to NCHRP 350 Report criteria.
11. Use of pallets is optional.

STATE OF CALIFORNIA
DEPARTMENT OF TRANSPORTATION

TEMPORARY CRASH CUSHION, SAND FILLED (SHOULDER INSTALLATIONS)

NO SCALE

RSP T2 DATED JUNE 6, 2008 SUPERSEDES STANDARD PLAN T2
DATED MAY 1, 2006 - PAGE 213 OF THE STANDARD PLANS BOOK DATED MAY 2006.

REVISED STANDARD PLAN RSP T2

2006 REVISED STANDARD PLAN RSP T2

5-15-08

DIST	COUNTY	ROUTE	POST MILES TOTAL PROJECT	SHEET NO.	TOTAL SHEETS
05	SLO	101	55.8/57.9	56	65

REGISTERED CIVIL ENGINEER

November 17, 2006
PLANS APPROVAL DATE

REGISTERED PROFESSIONAL ENGINEER
Greg W. Edwards
No. C36386
Exp. 6-30-08
CIVIL
STATE OF CALIFORNIA

The State of California or its officers or agents shall not be responsible for the accuracy or completeness of electronic copies of this plan sheet.

To accompany plans dated 8-23-10

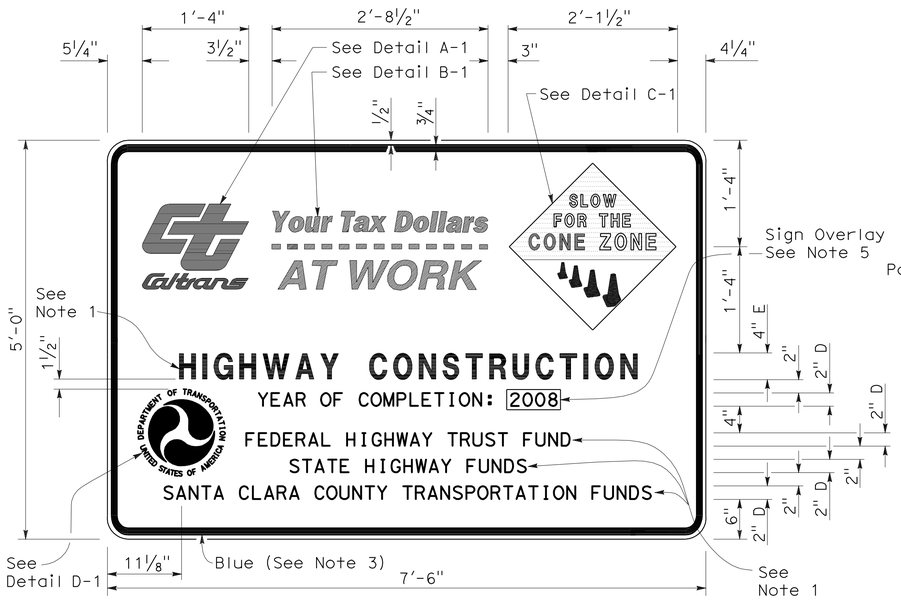

TYPE 1

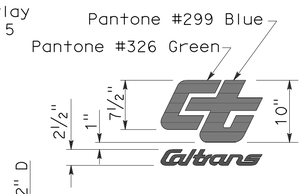

DETAIL A-1

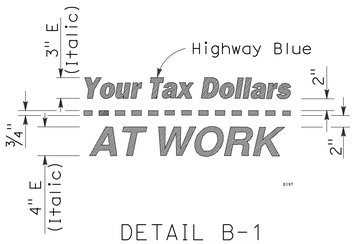

DETAIL B-1
(See Note 3)

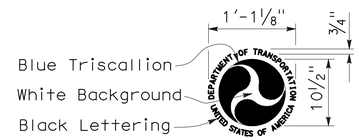

DETAIL D-1
(See Note 6)

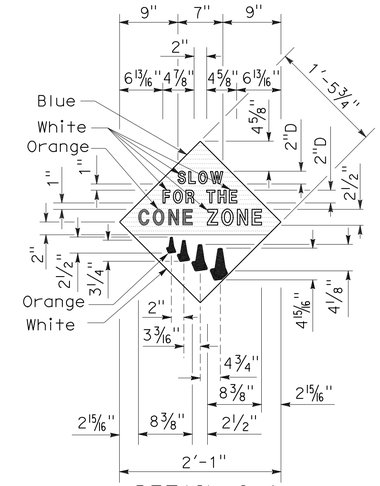

DETAIL C-1
(See Note 4)

NOTES:

1. The sign messages shown for type of project and fund types are examples only. See the Special Provisions for the applicable type of project and fund type messages to be used.
2. Except as otherwise shown, the legend of sign shall be black on a white background (non-reflective).
3. The border of the signs and details "B-1" and "B-2" shall be blue (non-reflective).
4. The diamond in details "C-1" and "C-2" shall be blue for the background of message, " SLOW FOR THE CONE ZONE", and white background for the orange cones. The color and type of font for the "SLOW FOR THE CONE ZONE" message shall be: "SLOW" white D; "FOR THE" white D; "CONE" orange Arial font; "ZONE" white Arial font.
5. Year of completion of project construction shown on the overlay is an example only. See the Special Provisions.
6. Use when the Project involves Federal Highway Trust Fund.

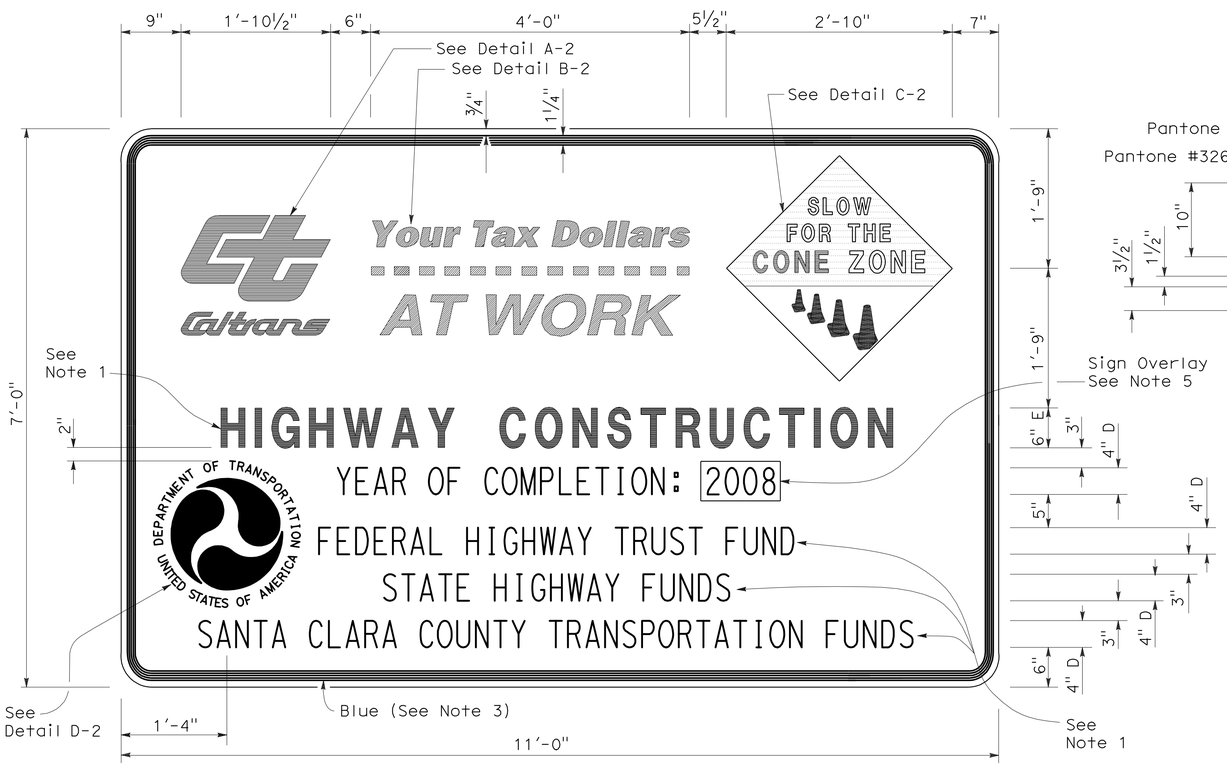

TYPE 2

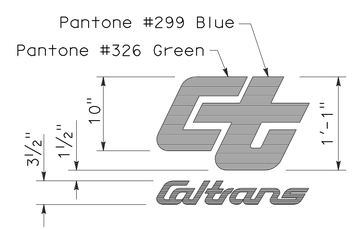

DETAIL A-2

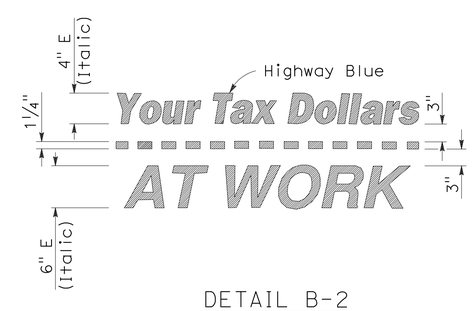

DETAIL B-2
(See Note 3)

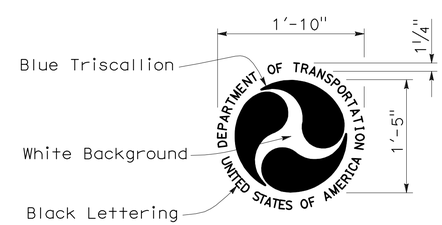

DETAIL D-2
(See Note 6)

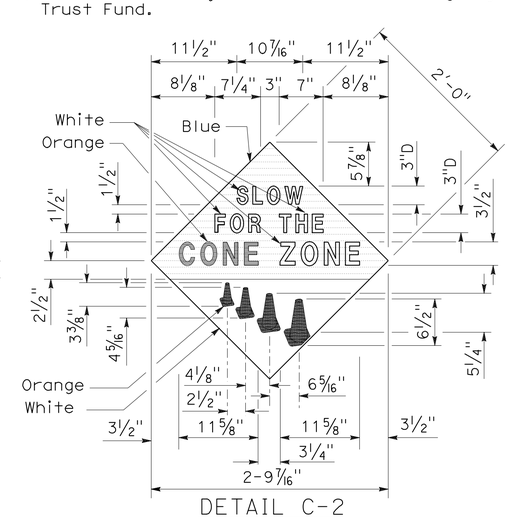

DETAIL C-2
(See Note 4)

STATE OF CALIFORNIA
DEPARTMENT OF TRANSPORTATION

CONSTRUCTION PROJECT FUNDING IDENTIFICATION SIGNS

NO SCALE

RSP T7 DATED NOVEMBER 17, 2006 SUPERSEDES STANDARD PLAN T7
DATED MAY 1, 2006 - PAGE 217 OF THE STANDARD PLANS BOOK DATED MAY 2006.

REVISED STANDARD PLAN RSP T7

2006 REVISED STANDARD PLAN RSP T7

9-7-06

DIST	COUNTY	ROUTE	POST MILES TOTAL PROJECT	SHEET NO.	TOTAL SHEETS
05	SLO	101	55.8/57.9	57	65

Robert B Schott
LICENSED LANDSCAPE ARCHITECT

August 15, 2008
PLANS Approval DATE

LICENSED LANDSCAPE ARCHITECT
Robert B. Schott 3025
Robert B Schott
Signature
11-04-08
Renewal Date
08-11-08
Date
STATE OF CALIFORNIA

The State of California or its officers or agents shall not be responsible for the accuracy or completeness of electronic copies of this plan sheet.

To accompany plans dated 8-23-10

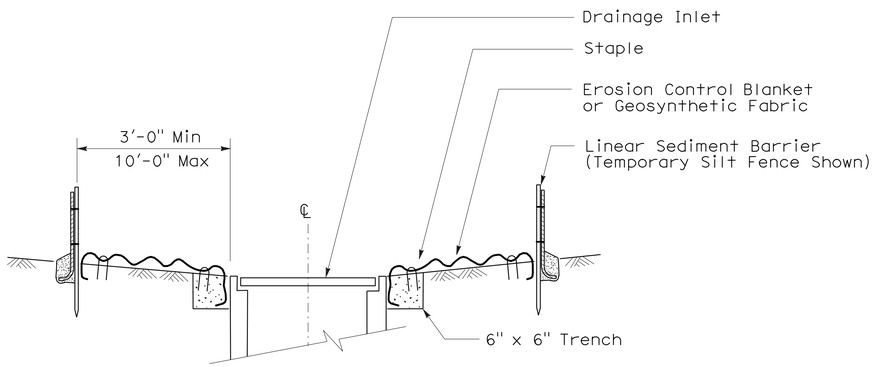

SECTION A-A

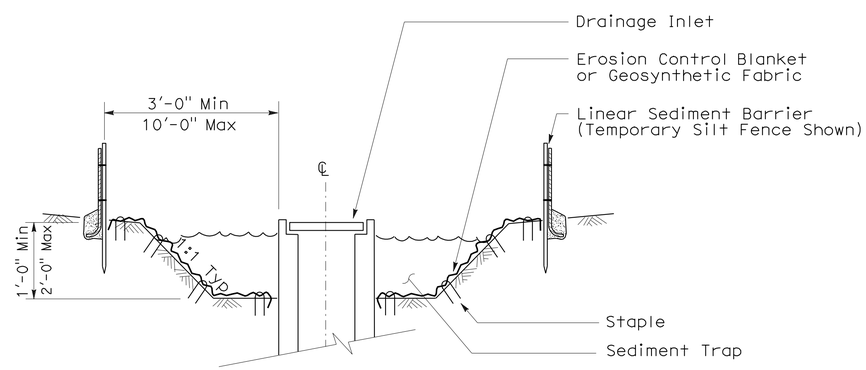

SECTION B-B

NOTES:

1. See Standard Plan T51 for Temporary Silt Fence.
2. Dimensions may vary to fit field conditions.

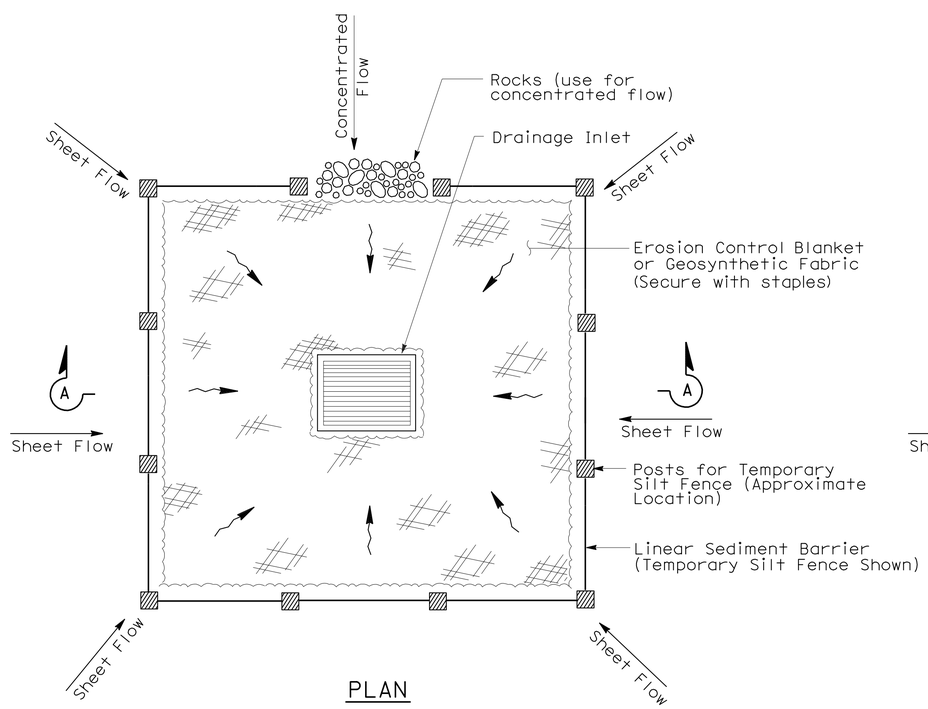

PLAN

TEMPORARY DRAINAGE
INLET PROTECTION (TYPE 1)

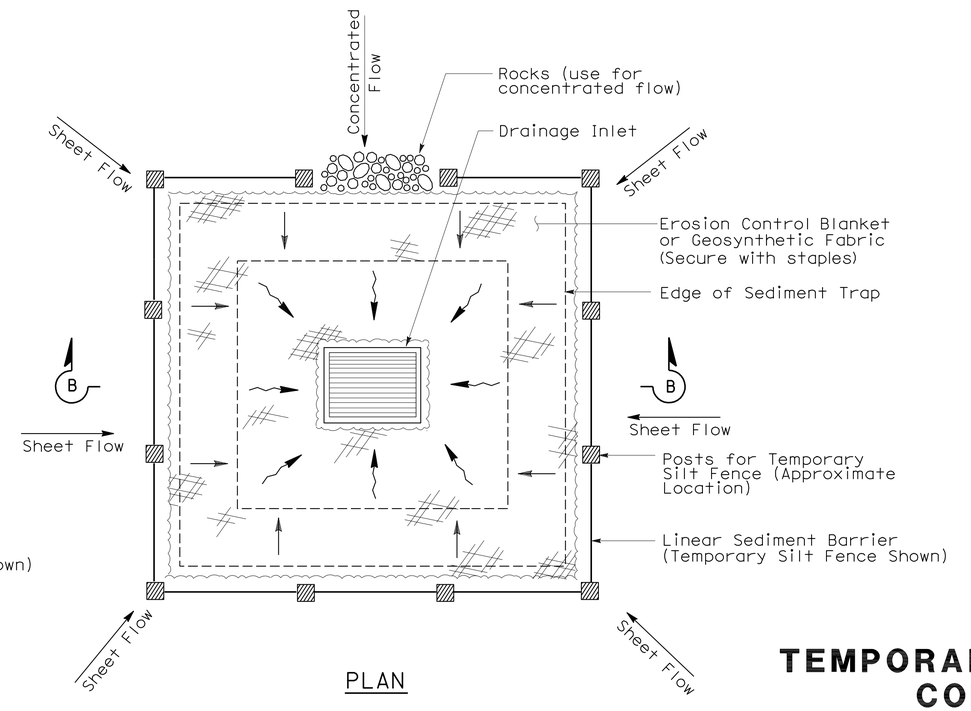

PLAN

TEMPORARY DRAINAGE
INLET PROTECTION (TYPE 2)
(EXCAVATED SEDIMENT TRAP)

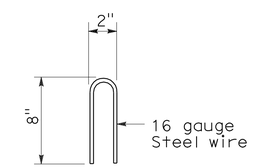

STAPLE DETAIL

STATE OF CALIFORNIA
DEPARTMENT OF TRANSPORTATION

TEMPORARY WATER POLLUTION CONTROL DETAILS (TEMPORARY DRAINAGE INLET PROTECTION)

NO SCALE

NSP T61 DATED AUGUST 15, 2008 SUPPLEMENTS
THE STANDARD PLANS BOOK DATED MAY 2006.

NEW STANDARD PLAN NSP T61

2006 NEW STANDARD PLAN NSP T61

7-11-08

DIST	COUNTY	ROUTE	POST MILES TOTAL PROJECT	SHEET NO.	TOTAL SHEETS
05	SLO	101	55.8/57.9	58	65

LICENSED LANDSCAPE ARCHITECT

August 15, 2008
PLANS APPROVAL DATE

The State of California or its officers or agents shall not be responsible for the accuracy or completeness of electronic copies of this plan sheet.

LICENSED LANDSCAPE ARCHITECT — Robert B. Schott — Signature — 11-04-08 Renewal Date — 08-11-08 Date — STATE OF CALIFORNIA

To accompany plans dated 8-23-10

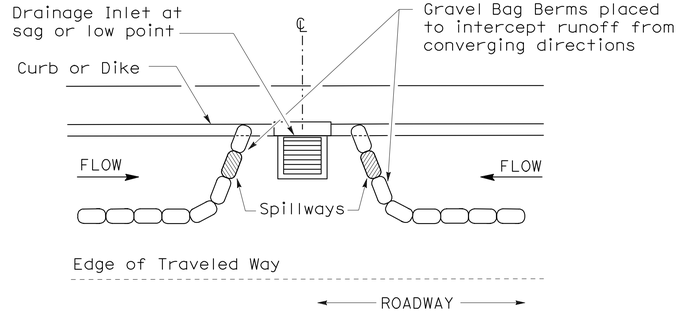

PLAN

CONFIGURATION FOR SAG POINT INLET (GRAVEL BAG BERM)

GRAVEL BAG BERM (TYPE 3A) SPACING TABLE

SLOPE OF ROADWAY (PERCENT)	1 to 3.9	4 to 5.9	6 to 7.9	8 to 10	10+
INTERVAL BETWEEN BERM	100′	75′	50′	25′	12′

For slope of less than 1%, install barriers only if erosion/sediment is prevalent

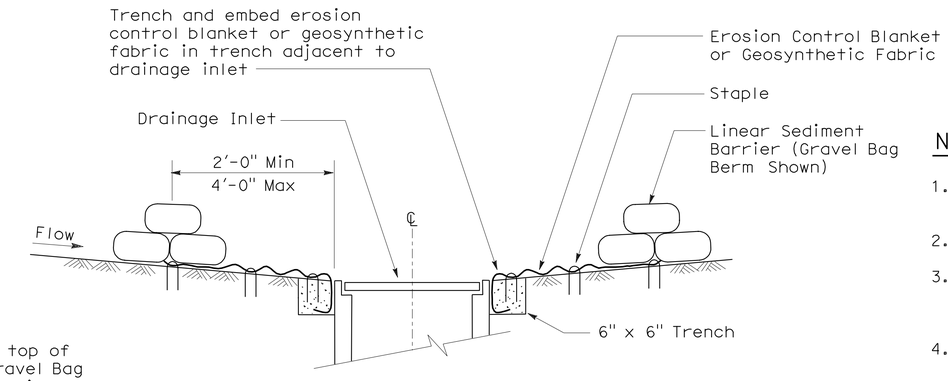

SECTION A-A

NOTES:

1. Place safety cones adjacent to drainage inlet protection.
2. Dimensions may vary to fit field conditions.
3. Install a minimum of 3 gravel bag berms upstream of each drainage inlet to be protected.
4. Position erosion control blanket or geosynthetic fabric at edge of concrete apron and secure in trench.
5. Erosion control blanket or geosynthetic fabric is not required if the area adjacent to the drainage inlet is vegetated or paved.

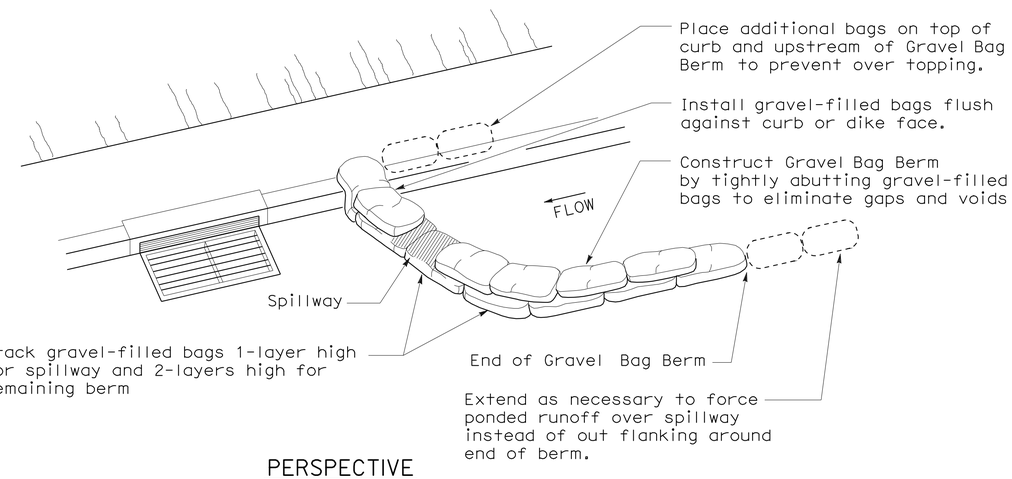

PERSPECTIVE

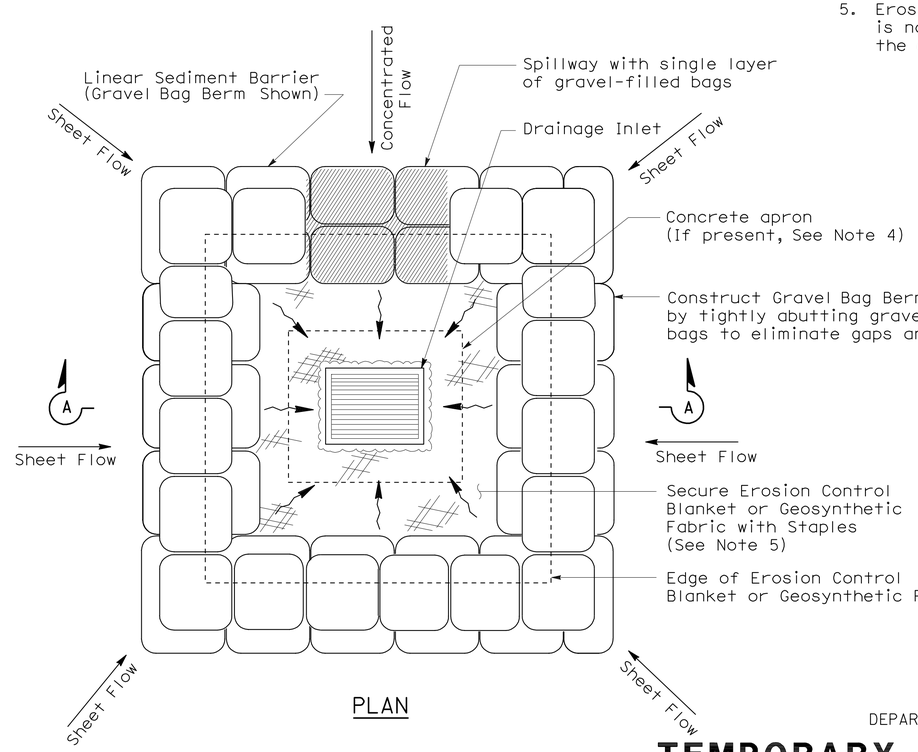

PLAN

TEMPORARY DRAINAGE INLET PROTECTION (TYPE 3B)

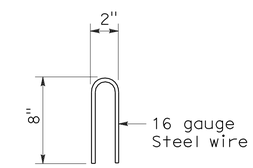

STAPLE DETAIL

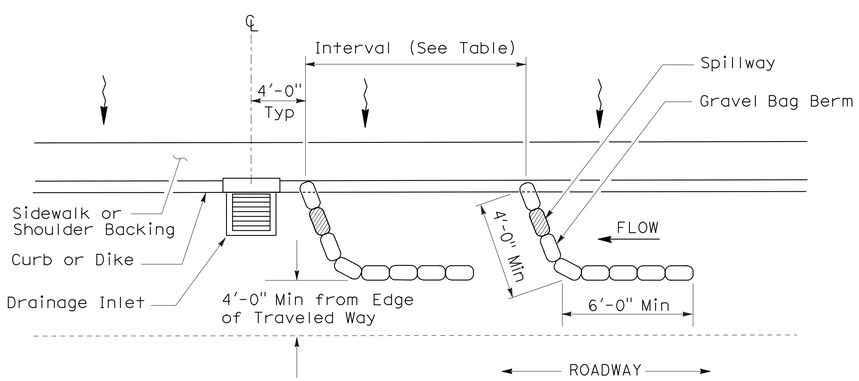

PLAN

TEMPORARY DRAINAGE INLET PROTECTION (TYPE 3A) (GRAVEL BAG BERM)

STATE OF CALIFORNIA
DEPARTMENT OF TRANSPORTATION

TEMPORARY WATER POLLUTION CONTROL DETAILS (TEMPORARY DRAINAGE INLET PROTECTION)

NO SCALE

NSP T62 DATED AUGUST 15, 2008 SUPPLEMENTS THE STANDARD PLANS BOOK DATED MAY 2006.

NEW STANDARD PLAN NSP T62

2006 NEW STANDARD PLAN NSP T62

7-11-08

DIST	COUNTY	ROUTE	POST MILES TOTAL PROJECT	SHEET NO.	TOTAL SHEETS
05	SLO	101	55.8/57.9	59	65

Robert B Schott
LICENSED LANDSCAPE ARCHITECT

August 15, 2008
PLANS APPROVAL DATE

The State of California or its officers or agents shall not be responsible for the accuracy or completeness of electronic copies of this plan sheet.

LICENSED LANDSCAPE ARCHITECT — Robert B. Schott — Signature — 11-04-08 Renewal Date — 08-11-08 Date — STATE OF CALIFORNIA

To accompany plans dated 8-23-10

FLEXIBLE SEDIMENT BARRIER SPACING TABLE

SLOPE OF ROADWAY (PERCENT)	0 to 0.9	1 to 1.9	2 to 2.9	3 to 4	5+
INTERVAL BETWEEN BARRIERS	50′	35′	30′	25′	20′
ANGLE FROM FACE OF CURB	70°	70°	70°	45°	45°
SUGGESTED BARRIER LENGTH	6′	6′	6′	6′	6′

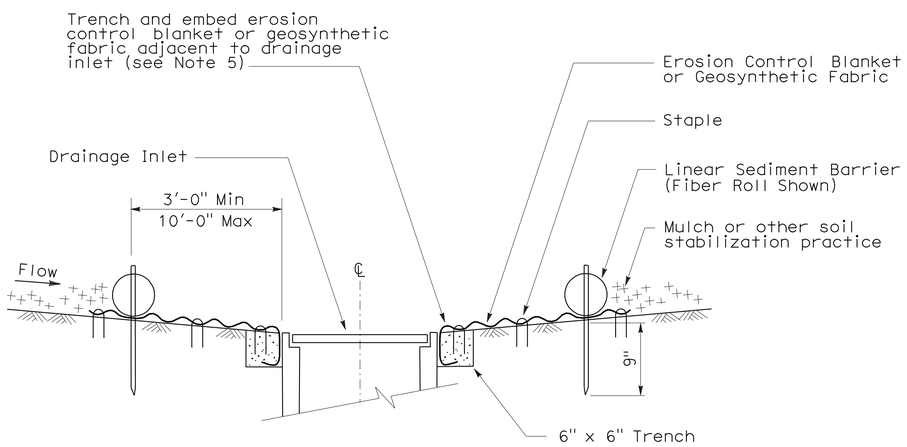

SECTION A-A

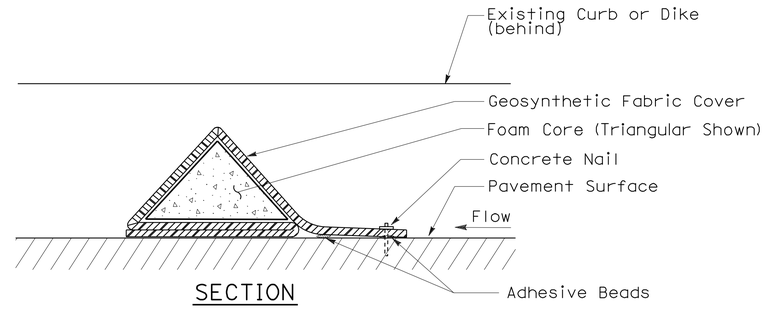

SECTION

FLEXIBLE SEDIMENT BARRIER DETAIL (FOAM BARRIER SHOWN)

NOTES:

1. See Standard Plan T51 for Temporary Silt Fence.
2. Dimensions may vary to fit field conditions.
3. Install a minimum of 3 flexible sediment barriers upstream of each drainage inlet to be protected.
4. Position erosion control blanket or geosynthetic fabric at edge of concrete apron and secure in trench.
5. Erosion control blanket or geosynthetic fabric is not required if the area adjacent to the drainage inlet is vegetated.

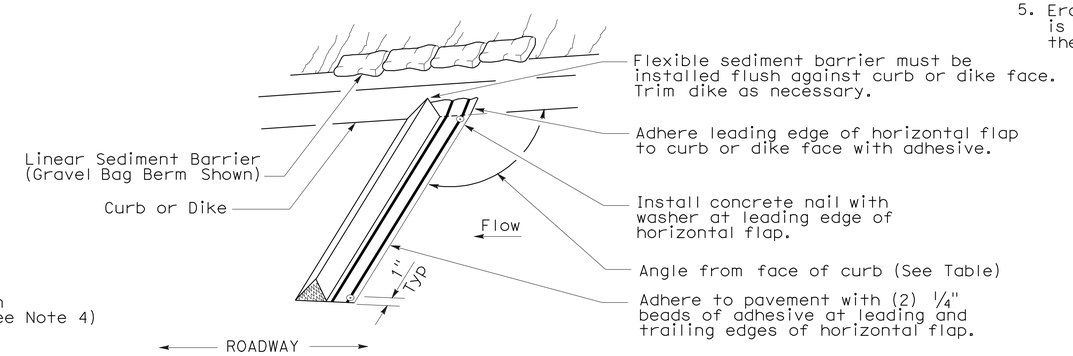

PERSPECTIVE

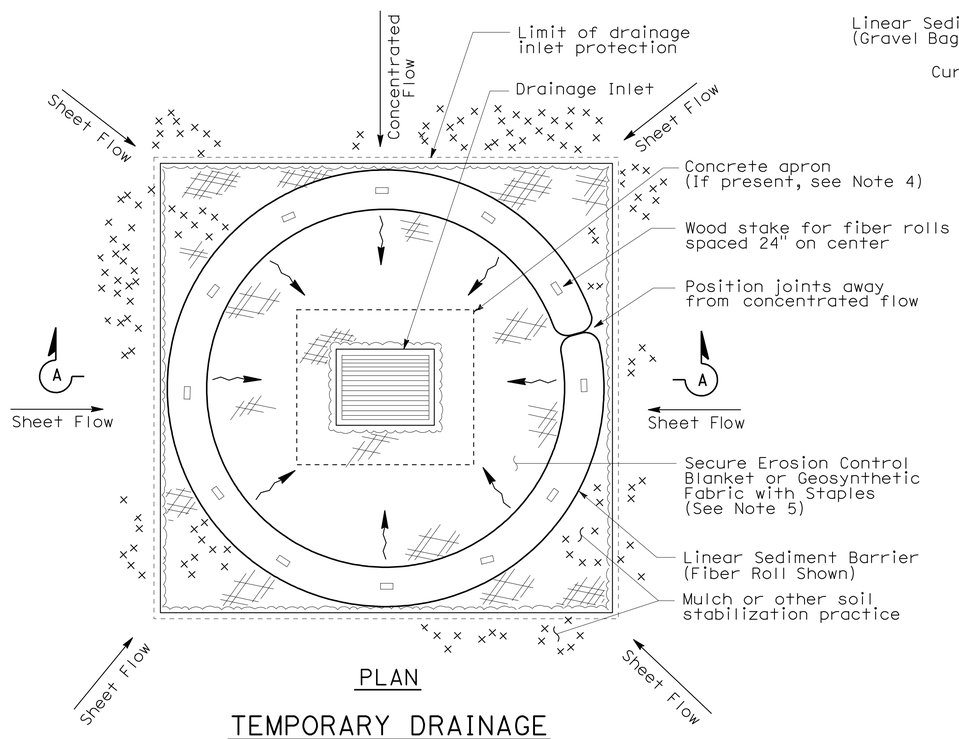

PLAN

TEMPORARY DRAINAGE INLET PROTECTION (TYPE 4A)

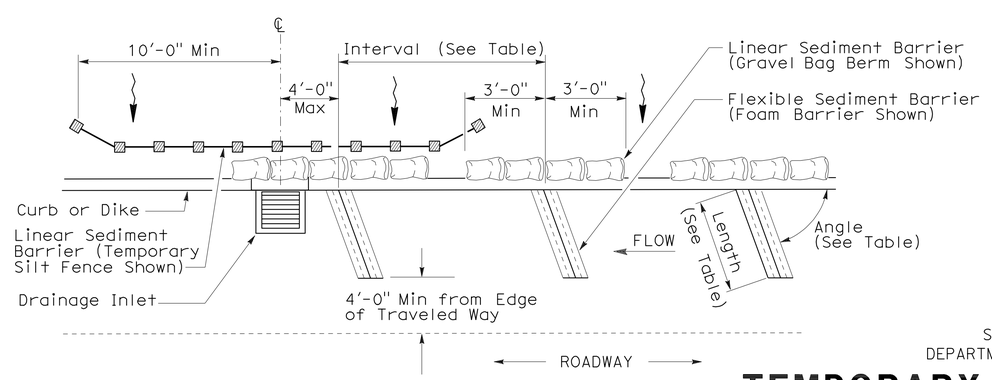

PLAN

TEMPORARY DRAINAGE INLET PROTECTION (TYPE 4B) FLEXIBLE SEDIMENT BARRIER

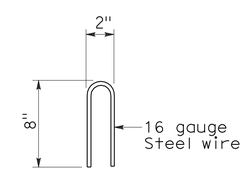

STAPLE DETAIL

STATE OF CALIFORNIA
DEPARTMENT OF TRANSPORTATION

TEMPORARY WATER POLLUTION CONTROL DETAILS (TEMPORARY DRAINAGE INLET PROTECTION)

NO SCALE

NSP T63 DATED AUGUST 15, 2008 SUPPLEMENTS THE STANDARD PLANS BOOK DATED MAY 2006.

NEW STANDARD PLAN NSP T63

2006 NEW STANDARD PLAN NSP T63

7-11-08

DIST	COUNTY	ROUTE	POST MILES TOTAL PROJECT	SHEET NO.	TOTAL SHEETS
05	SLO	101	55.8/57.9	60	65

LICENSED LANDSCAPE ARCHITECT

August 15, 2008
PLANS APPROVAL DATE

LICENSED LANDSCAPE ARCHITECT — Robert B. Schott — Signature 11-04-08 Renewal Date — 08-11-08 Date — STATE OF CALIFORNIA

The State of California or its officers or agents shall not be responsible for the accuracy or completeness of electronic copies of this plan sheet.

To accompany plans dated 8-23-10

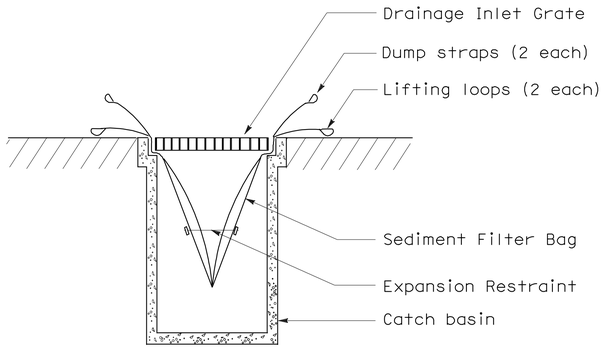

SECTION B-B

SEDIMENT FILTER BAG DETAIL

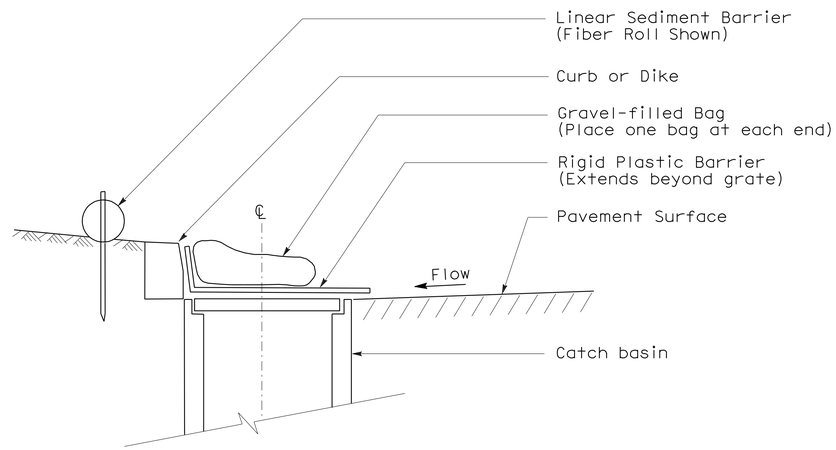

SECTION

TEMPORARY DRAINAGE INLET PROTECTION (TYPE 6A) (CATCH BASIN WITH GRATE)

NOTES:

1. See Standard Plan T51 for Temporary Silt Fence.
2. Dimensions may vary to fit field conditions.

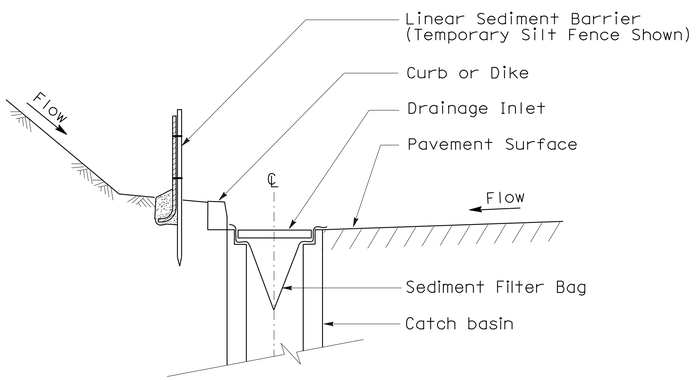

SECTION A-A

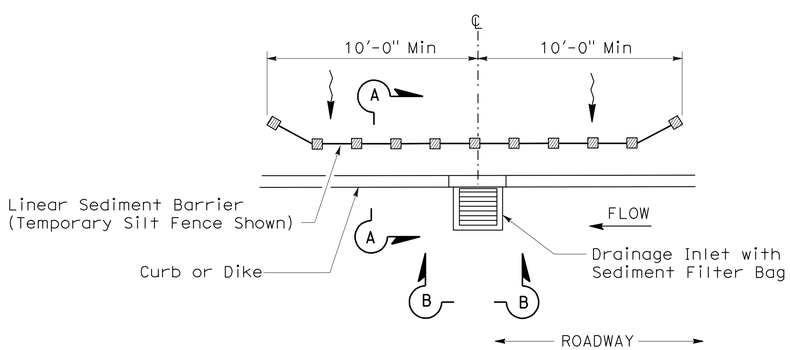

PLAN

TEMPORARY DRAINAGE INLET PROTECTION (TYPE 5) (SEDIMENT FILTER BAG)

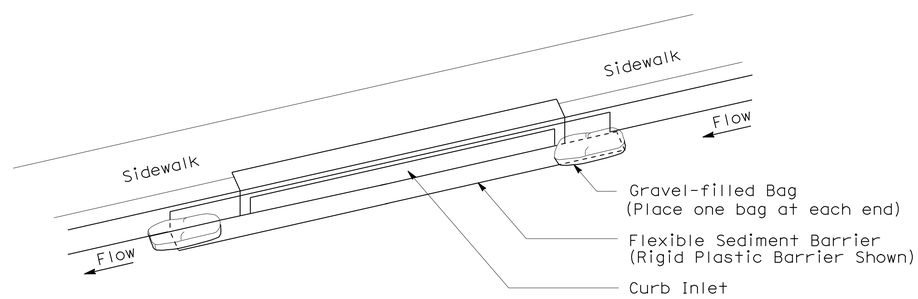

PERSPECTIVE

TEMPORARY DRAINAGE INLET PROTECTION (TYPE 6B) (CURB INLET WITHOUT GRATE)

STATE OF CALIFORNIA
DEPARTMENT OF TRANSPORTATION

TEMPORARY WATER POLLUTION CONTROL DETAILS (TEMPORARY DRAINAGE INLET PROTECTION)

NO SCALE

NSP T64 DATED AUGUST 15, 2008 SUPPLEMENTS THE STANDARD PLANS BOOK DATED MAY 2006.

NEW STANDARD PLAN NSP T64

2006 NEW STANDARD PLAN NSP T64

DIST	COUNTY	ROUTE	POST MILES TOTAL PROJECT	SHEET NO.	TOTAL SHEETS
05	SLO	101	55.8/57.9	61	65

REGISTERED ELECTRICAL ENGINEER

October 5, 2007
PLANS APPROVAL DATE

REGISTERED PROFESSIONAL ENGINEER Jeffery G. McRae No. E14512 Exp. 6-30-08 ELECTRICAL STATE OF CALIFORNIA

The State of California or its officers or agents shall not be responsible for the accuracy or completeness of electronic copies of this plan sheet.

To accompany plans dated 8-23-10

ELECTROLIERS

STANDARD TYPES
15, 15D
15 STRUCTURE
21, 21D STRUCTURE
30
31
32
35
36-20A

High mast light pole

Double Arm lighting standard

Existing electrolier

Electrolier foundation (Future installation)

NOTES:

1. Luminaires shall be 310 W HPS when installed on Type 21, 21D, 30, 31, 32, 35 and 36-20A Standards, unless otherwise specified. Luminaires shall be 200 W HPS when installed on other type standards or poles, unless otherwise specified.
2. Luminaires shall be the cutoff type, ANSI Type Ⅲ medium cutoff lighting distribution, unless otherwise specified.
3. Variations noted adjacent to symbol on project plans.

Electrolier (see project notes or project plans)

Luminaire on wood pole

STANDARD NOTES:

- AB — Abandon. If applied to conduit, remove conductors.
- BC — Install pull box in existing conduit run.
- BP — Pedestrian barricade, type as indicated on plan.
- CB — Install conduit into existing pull box.
- CC — Connect new and existing conduit. Remove existing conductors and install conductors as indicated.
- CF — Conduit to remain for future use. Remove conductors. Install pull wire or rope.
- DH — Detector handhole.
- FA — Foundation to be abandoned.
- IS — Install sign on signal mast arm.
- NS — No slip base on standard.
- PEC — Photoelectric control.
- PEU — Photoelectric unit.
- RC — Equipment or material to be removed and become the property of the Contractor.
- RE — Remove electrolier, fuses and ballast. Tape ends of conductors.
- RL — Relocate equipment.
- RR — Remove and reuse equipment.
- RS — Remove and salvage equipment.
- SC — Splice new to existing conductors.
- SD — Service disconnect.
- SF — Standard to remain for future use. Remove luminaire, pole conductors, fuses and ballast.
- TSP — Telephone service point.

ABBREVIATIONS AND EQUIPMENT DESIGNATIONS

PROPOSED	EXISTING	
BBS	bbs	Battery backup system
BC	bc	Bolt circle
C	C	Conduit
CCTV	cctv	Closed circuit television
CKT	ckt	Circuit
CMS	cms	Changeable message sign
DLC	dlc	Loop detector lead-in cable
EMS	ems	Extinguishable message sign
EVC	evc	Emergency vehicle cable
EVD	evd	Emergency vehicle detector
FB	fb	Flashing beacon
FBCA	fbca	Flashing beacon control assembly
FBS	fbs	Flashing beacon with slip base
FO	fo	Fiber optic
G	G	Ground (Equipment Grounding Conductor)
GFCI	GFCI	Ground fault circuit interrupt
HAR	har	Highway advisory radio
HEX	hex	Hexagonal
HPS	hps	High pressure sodium
IISNS	iisns	Internally illuminated street name sign
ISL	isl	Induction sign lighting
LED	led	Light emitting diode
LMA	lma	Luminaire mast arm
LPS	lps	Low pressure sodium
LTG	ltg	Lighting
LUM	lum	Luminaire
MAT	mat	Mast arm mounting vehicle signal faces, top attachment
MAS	mas	Mast arm mounting vehicle signal faces, side attachment
MAS-4A	mas-4A	Mast arm mounting vehicle signal faces, side attachment - 4 signal section
MAS-4B	mas-4B	
MAS-4C	mas-4C	
MAS-5A	mas-5A	Mast arm mounting vehicle signal faces, side attachment - 5 signal section
MAS-5B	mas-5B	
MC	mc	Mercury contactor
M/M	m/m	Multiple to multiple transformer
MT	mt	Conduit with pull wire or rope only
MTG	mtg	Mounting
	mv	Mercury vapor lighting fixture
N	N	Neutral (Grounded Conductor)
NC	NC	Normally closed
NO	NO	Normally open
PB	pb	Pull box
PEC	pec	Photoelectric control (Type Ⅰ, Ⅱ, Ⅲ, Ⅳ or Ⅴ as shown)
PED	ped	Pedestrian
PEU	peu	Photoelectric unit
PPB	ppb	Pedestrian push button
RL		Relocated equipment
RM	rm	Ramp metering
SB	sb	Slip base
SIC	sic	Signal interconnect cable
SIG	sig	Signal
SMA	sma	Signal mast arm
SNS	sns	Street name sign
SP	sp	Service point
TDC	tdc	Telephone demarcation cabinet
TMS	tms	Traffic monitoring station
TOS	tos	Traffic Operations System
VEH	veh	Vehicle
XFMR	xfmr	Transformer
COMM	comm	Communication
RWIS	rwis	Roadway weather information system

SOFFIT AND WALL MOUNTED LUMINAIRES

Pendant, 70 W HPS unless otherwise specified.

Flush, 70 W HPS unless otherwise specified.

Wall surface, 70 W HPS unless otherwise specified.

Existing soffit or wall luminaire to remain unmodified.

Existing soffit or wall luminaire to be modified as specified.

NOTE:

Arrow indicates "street side" of luminaire.

STATE OF CALIFORNIA
DEPARTMENT OF TRANSPORTATION

ELECTRICAL SYSTEMS (SYMBOLS AND ABBREVIATIONS)

NO SCALE

RSP ES-1A DATED OCTOBER 5, 2007 SUPERSEDES STANDARD PLAN ES-1A DATED MAY 1, 2006 - PAGE 400 OF THE STANDARD PLANS BOOK DATED MAY 2006.

REVISED STANDARD PLAN RSP ES-1A

2006 REVISED STANDARD PLAN RSP ES-1A

DIST	COUNTY	ROUTE	POST MILES TOTAL PROJECT	SHEET NO.	TOTAL SHEETS
05	SLO	101	55.8/57.9	62	65

REGISTERED ELECTRICAL ENGINEER

October 5, 2007
PLANS APPROVAL DATE

REGISTERED PROFESSIONAL ENGINEER
Jeffery G. McRae
No. E14512
Exp. 6-30-08
ELECTRICAL
STATE OF CALIFORNIA

The State of California or its officers or agents shall not be responsible for the accuracy or completeness of electronic copies of this plan sheet.

To accompany plans dated 8-23-10

CONDUIT

PROPOSED	EXISTING	
		Lighting Conduit, unless otherwise indicated or noted
		Traffic signal conduit
C	c	Communication conduit
T	t	Telephone conduit
F	f	Fire alarm conduit
FO	fo	Fiber optic conduit
		Conduit termination (RSP ES-9A C)
R	r	Conduit riser in/on structure or service pole

SERVICE EQUIPMENT

PROPOSED	EXISTING	
OH	oh	Overhead lines
U	U	Wood pole "U" indicates utility owned
		Pole guy with anchor
		Utility transformer - ground mounted
III		Service equipment enclosure type
		Service equipment enclosure door indicates front of enclosure
T	t	Telephone demarcation cabinet

POLE-MOUNTED SERVICE DESIGNATION

Type of installation

TYPE H SERVICE - 28'-10" ← Pole height above grade

ILLUMINATED OVERHEAD SIGN

PROPOSED	EXISTING	
		Overhead sign - Single post
		Overhead sign - Two post
		Overhead sign - Mounted on structure
		Overhead sign with electrolier

SIGNAL EQUIPMENT

PROPOSED	EXISTING	
		Pedestrian signal face
		Pedestrian push button post
		Pedestrian barricade
		Vehicle signal face (with backplate, 3-Section: red, yellow and green)
		Vehicle signal face with angle visors
PV	PV	Modifications of basic symbols: "L" indicates all non-arrow sections louvered "LG" indicates louvered green section only "PV" indicates 12" programmed visibility sections "8" indicates all 8" sections (only when specified)
		Type 15TS and Vehicle signal face
		Vehicle signal face with red, yellow and green left arrow sections
		Vehicle signal face with red and yellow sections and up green arrow
		Vehicle signal face (5 Section) with red, yellow and green sections and yellow and green right arrows
		Type 1 Standard and attached vehicle signal faces
		Standard with signal mast arm only and attached vehicle signal faces and internally illuminated street name sign
		Type 33 Standard, Left-turn vehicle signal face and sign
		Standard with luminaire and signal mast arms and attached vehicle signal faces
		Cantilever flashing beacon Type 9 Frame, with a sign unless otherwise specified or indicated
		Type 15-FBS Standard with two vehicle signal face sections with lens, backplate and visor with a sign
R	Y	Flashing beacon. One vehicle signal face section with lens, backplate and visor. "R" indicates red indication, "Y" indicates yellow indication
		Controller assembly. Door indicates front of cabinet

SIGNAL EQUIPMENT Cont

PROPOSED	EXISTING	
		Guard post
		Type 1 Standard with "Meter On" sign
		Emergency Vehicle detector

NOTES:

1. All signal sections shall be 12" unless shown otherwise.
2. Signal heads shall be provided with backplates unless shown otherwise.
3. Signal indication shall be LED.

STATE OF CALIFORNIA
DEPARTMENT OF TRANSPORTATION

ELECTRICAL SYSTEMS (SYMBOLS AND ABBREVIATIONS)

NO SCALE

RSP ES-1B DATED OCTOBER 5, 2007 SUPERCEDES STANDARD PLAN ES-1B DATED MAY 1, 2006 - PAGE 401 OF THE STANDARD PLANS BOOK DATED MAY 2006.

REVISED STANDARD PLAN RSP ES-1B

2006 REVISED STANDARD PLAN RSP ES-1B

DIST	COUNTY	ROUTE	POST MILES TOTAL PROJECT	SHEET NO.	TOTAL SHEETS
05	SLO	101	55.8/57.9	63	65

REGISTERED ELECTRICAL ENGINEER

October 5, 2007
PLANS APPROVAL DATE

REGISTERED PROFESSIONAL ENGINEER
Jeffery G. McRae
No. E14512
Exp. 6-30-08
ELECTRICAL
STATE OF CALIFORNIA

The State of California or its officers or agents shall not be responsible for the accuracy or completeness of electronic copies of this plan sheet.

To accompany plans dated 8-23-10

EQUIPMENT IDENTIFICATION

ILLUMINATED SIGN IDENTIFICATION NUMBER:

Sign No. 12345

10 ISL SCI 1.0

- Sign number - Place on post or structure
- Transformer rating (kVA)
- Lighting control type
- Number and type of fixtures

Do NOT place on standard or structure

ELECTROLIER OR EQUIPMENT IDENTIFICATION NUMBER:

12345 - 15'-0"

- Mast arm length, if shown. Do not place on standard or structure.
- Equipment number - Place on standard or structure. Existing equipment numbers are shown in parenthesis

CONDUIT AND CONDUCTOR IDENTIFICATION:

1½"C, 2#10, 15#14, 2 DLC

- Number and size of conductors and cables
- Size of conduit in inches

Ø1, Ø2, Ø2P, etc.	Traffic phase identification for signal faces, detectors and phase diagrams
1 2 3	Project note numbers
A B C	Equipment description, installation or item numbers
1 2 3	Conduit run numbers

SIGNAL AND LIGHTING STANDARD (TYPICAL DESIGNATION):

19A - 3 - 100

- Wind velocity = 100 mph
- Case 3 arm loading
- Standard type
- Standard Plan sheet number
- Detail number or letter

MISCELLANEOUS EQUIPMENT

PROPOSED	EXISTING	
CMS	cms	Changeable message sign
		Closed circuit television camera
		Highway advisory radio pole and antenna
EMS	ems	Extinguishable message sign
M V	m v	Detection device M = Microwave sensor V = Video image sensor

WIRING DIAGRAM LEGEND

P	Pole
CB	Circuit breaker
A	Ampere
V	Volt
M	Metered
UM	Unmetered
NB	Neutral bus
GB	Ground bus
G	Equipment grounding conductor
N	Grounded conductor (Neutral)

- External conductor
- Conductor or bus
- Tie point
- Contactor coil
- Contactor, Contact NO
- Terminal blocks
- Contactor, Contact NC
- Enclosure bond
- Grounding electrode
- Circuit breaker
- Receptacle

PULL BOXES

PROPOSED EXISTING

Pull box-No. 5 unless otherwise indicated or noted.

3 9A(21)

Pull box-Additional designations or descriptions

3	= No. 3½ pull box
5	= No. 5 pull box
6	= No. 6 pull box
7	= No. 7 (Ceiling pull box)
8	= No. 8 (Pendant soffit pull box)
9	= No. 9 pull box
9A	= No. 9A pull box

(C)	= Communications pull box
(E)	= Pull box with extension
(S)	= Sprinkler control pull box
(21)	= Anchor bolts and conduit for future installation of Type 21 Standard
(T)	= Traffic pull box

VEHICLE DETECTORS

5 J 9 U

- Vehicle detector designation
- U = Upper
  L = Lower
- Slot number in input file
- Input file (I or J)
- Phase

PROPOSED EXISTING

- Type A detector loop. Outline of sawcut shown.
- Type B detector loop. Outline of sawcut shown.
- Type C detector loop. Outline of sawcut shown.
- Type D detector loop. Outline of sawcut shown.
- Type E detector loop. Outline of sawcut shown.
- Type Q detector loop. Outline of sawcut shown.
- Magnetic detector
- DH / dh — Detector handhole
- Microwave or video detection zone

STATE OF CALIFORNIA
DEPARTMENT OF TRANSPORTATION

ELECTRICAL SYSTEMS (SYMBOLS AND ABBREVIATIONS)

NO SCALE

RSP ES-1C DATED OCTOBER 5, 2007 SUPERCEDES STANDARD PLAN ES-1C DATED MAY 1, 2006 - PAGE 402 OF THE STANDARD PLANS BOOK DATED MAY 2006.

REVISED STANDARD PLAN RSP ES-1C

2006 REVISED STANDARD PLAN RSP ES-1C

DIST	COUNTY	ROUTE	POST MILES TOTAL PROJECT	SHEET NO.	TOTAL SHEETS
05	SLO	101	55.8/57.9	64	65

REGISTERED ELECTRICAL ENGINEER

October 5, 2007
PLANS APPROVAL DATE

REGISTERED PROFESSIONAL ENGINEER
Jeffery G. McRae
No. E14512
Exp. 6-30-08
ELECTRICAL
STATE OF CALIFORNIA

The State of California or its officers or agents shall not be responsible for the accuracy or completeness of electronic copies of this plan sheet.

To accompany plans dated 8-23-10

2006 REVISED STANDARD PLAN RSP ES-2C

NOTES-TYPE III SERVICE EQUIPMENT ENCLOSURES:

1. Service equipment enclosure and metering equipment shall meet the requirements of the service utility. The meter area shall have a sealable, lockable, weathertight cover that can be removed without the use of tools.

2. Service equipment enclosures shall be factory wired and conform to NEMA standards.

3. Dimensions of service equipment enclosures shall meet the requirements of the service utility.

4. The dead front panels on Type III service equipment enclosures shall have a continuous stainless steel or aluminum piano hinge. The panel in front of the breakers shall be secured with a latch or captive screws. No live parts shall be mounted on the dead front panel.

5. The exterior door shall have provisions for padlocking. The padlock hole shall be a minimum diameter of 7/16".

6. Enclosures housing transformers of more than one kVA shall have effective screened ventilation louver of not less than 50 square inches. Screen shall be stainless steel No. 304, with a No. 10 size mesh. Framed screen shall be secured with at least four bolts.

7. Fasteners on the exterior of the enclosure shall be vandal-resistant and shall not be removable from the exterior. Exterior screws, nuts, bolts and washers shall be stainless steel.

8. Landing lugs for incoming service conductors shall be compatible with either copper or aluminum conductors sized to suit the conductors shown on the plan. Landing lugs shall be copper or tin-plated aluminum. Neutral bus shall be rated for 125 A and be suitable for copper or aluminum conductors unless otherwise specified. The terminal shall include but not be limited to:

   a) Incoming terminals (landing lugs)
   b) Neutral lugs
   c) Solid neutral terminal strip

9. At least 6 standard single pole circuit breaker spaces, 3/4" nominal, shall be provided for branch circuits. Circuit breaker interiors shall be copper. Interiors of enclosure shall accept plug-in or cable-in/cable-out circuit breakers.

10. Control wiring shall be 600 V, 14 stranded machine tool wire. Where subject to flexing, 19 strand wire shall be used.

11. Main bus shall be rated for 125 A and shall be tin-plated copper.

12. A plastic laminated wiring diagram shall be provided with brass mounting eyelets and attached to the inside of the enclosure and the wiring diagram shall be affixed to the interior with a UL or ETL approved method.

13. An engraved phenolic nameplate on the dead front panel indicating the function of each circuit or device shall be installed with stainless steel rivets or stainless steel screws:

    a) Adjacent to the breaker or device with character size a minimum of 1/8".

    b) At the top of the exterior door panel indicating State system number, voltage level and number of phases with character size a minimum of 3/16".

14. The plan shows the approximate location of devices within the enclosure. Components may be rearranged, however, the "working" clearances within the service equipment enclosure shall be maintained.

15. In unpaved areas a raised portland cement concrete pad 2'-0" x 4" x width of foundation shall be constructed in front of new service equipment enclosure installation. Pad shall be set to elevation of foundation.

16. Foundation shall extend 2" minimum beyond edge of service equipment enclosure.

17. Internal bus, where shown, is typical only. Alternative design of proposed service equipment enclosure shall be submitted to the Engineer for approval.

18. Plug-in circuit breakers may be mounted in the vertical or horizontal position. Cable-in/cable-out circuit breakers shall be mounted in the vertical position.

19. Type III-AF and Type III-BF service equipment enclosures shall have the meter viewing windows located on the front side of the service equipment enclosures.

20. Type III-AR and Type III-BR service equipment enclosures shall be similarly constructed as Type III-AF and Type III-BF respectively, except the meter viewing windows shall be located on the back side of the service equipment enclosures.

21. Minimum clearance shall be required for front and back of service equipment enclosure per National Electrical Code, Article 110.26, "Spaces About Electric Equipment (600 Volts, Nominal, or Less)."

STATE OF CALIFORNIA
DEPARTMENT OF TRANSPORTATION

ELECTRICAL SYSTEMS (SERVICE EQUIPMENT NOTES TYPE III SERIES)

NO SCALE

RSP ES-2C DATED OCTOBER 5, 2007 SUPERCEDES STANDARD PLAN ES-2C DATED MAY 1, 2006 - PAGE 405 OF THE STANDARD PLANS BOOK DATED MAY 2006.

REVISED STANDARD PLAN RSP ES-2C

DIST	COUNTY	ROUTE	POST MILES TOTAL PROJECT	SHEET NO.	TOTAL SHEETS
05	SLO	101	55.8/57.9	65	65

REGISTERED ELECTRICAL ENGINEER

October 5, 2007
PLANS APPROVAL DATE

REGISTERED PROFESSIONAL ENGINEER Jeffery G. McRae No. E14512 Exp. 6-30-08 ELECTRICAL STATE OF CALIFORNIA

The State of California or its officers or agents shall not be responsible for the accuracy or completeness of electronic copies of this plan sheet.

To accompany plans dated 8-23-10

2006 REVISED STANDARD PLAN RSP ES-2E

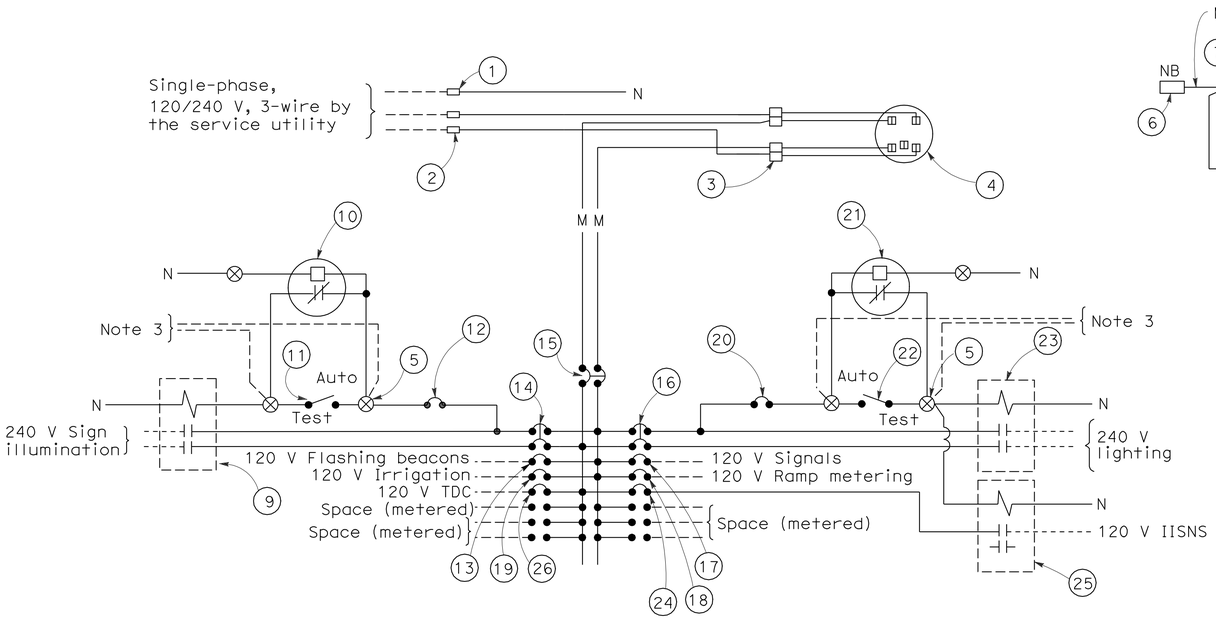

120/240 V SERVICE WIRING DIAGRAM (TYPICAL)

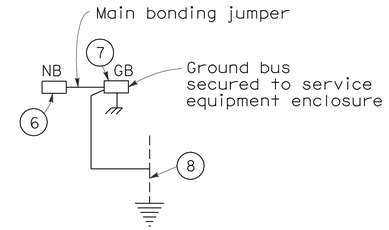

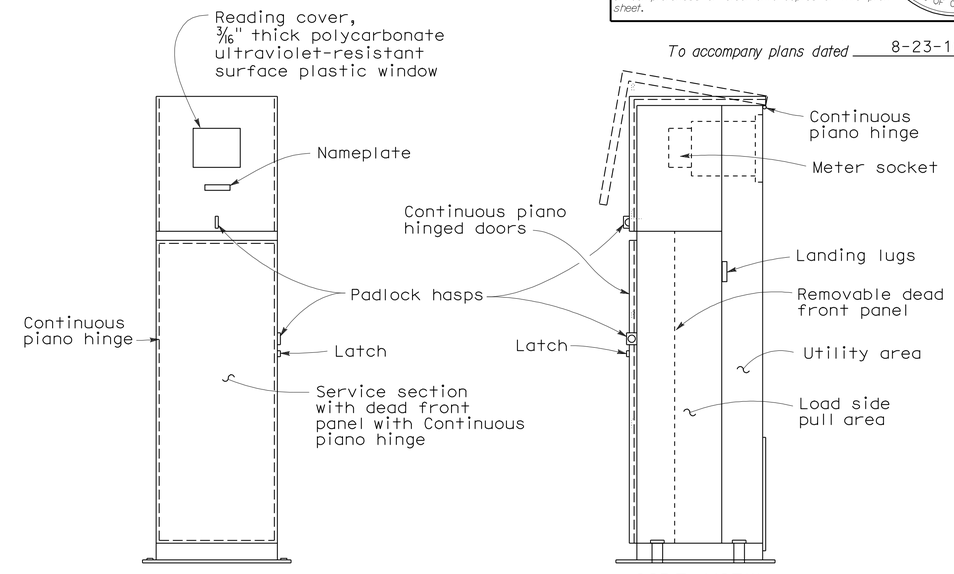

FRONT VIEW

SIDE VIEW

TYPE III-BF SERVICE EQUIPMENT ENCLOSURE WITH PROVISIONS FOR ONE 100 A METER (TYPICAL)

TYPE III-B SERVICE (120/240 V) EQUIPMENT LEGEND		
ITEM No.	COMPONENT	NAME PLATE DESCRIPTION
1	Neutral lug	
2	Landing lug (Note 6)	
3	Test bypass facility	
4	Meter socket and support	
5	Terminal blocks	
6	Neutral bus	
7	Ground bus	
8	Grounding electrode	
9	30 A, 2PNO Contactor	Sign Illumination
10	Photoelectric unit (Note 7)	
11	15 A, 1P, Test switch	Sign Illumination Test Switch
12	15 A, 120 V, 1P, CB	Sign Illumination Control
13	15 A, 120 V, 1P, CB	Flashing Beacon
14	30 A, 240 V, 2P, CB	Sign Illumination
15	100 A, 240 V, 2P, CB	Main Breaker
16	30 A, 240 V, 2P, CB	Lighting
17	50 A, 120 V, 1P, CB	Signals
18	30 A, 120 V, 1P, CB	Ramp Metering
19	20 A, 120 V, 1P, CB	Irrigation
20	15 A, 120 V, 1P, CB	Lighting Control
21	Photoelectric unit (Note 7)	
22	15 A, 1P, Test switch	Lighting Test Switch
23	60 A, 2PNO Contactor	Lighting
24	15 A, 120 V, 1P, CB	IISNS
25	30 A, 2PNO Contactor	IISNS
26	20 A, 120 V, IP, CB	Telephone Demarcation Cabinet

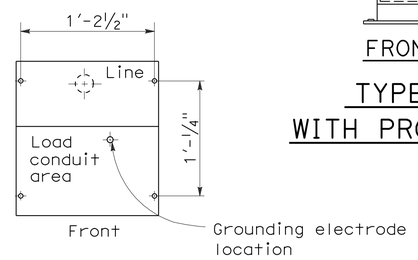

BASE FOR TYPE III-B SERVICE EQUIPMENT ENCLOSURE

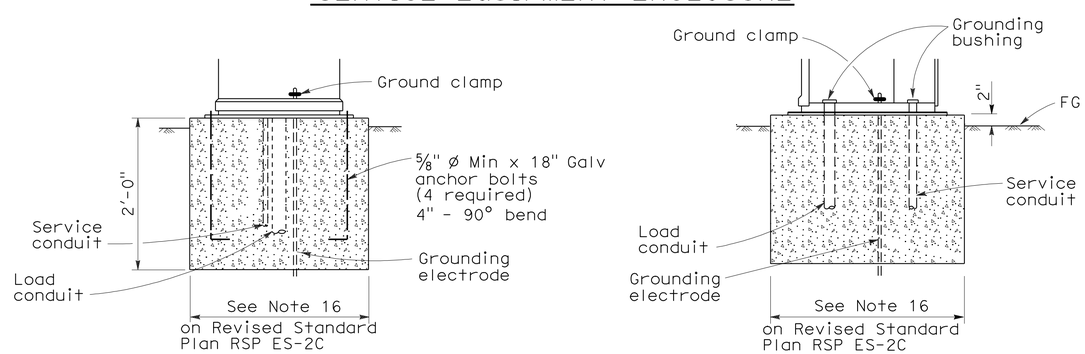

FRONT VIEW

SIDE VIEW

TYPE III-B SERVICE EQUIPMENT ENCLOSURE FOUNDATION DETAILS

NOTES: (FOR SERVICE EQUIPMENT ENCLOSURE)

1. Voltage ratings of service equipment shall conform to the service voltages indicated on the plans.
2. Unless otherwise indicated on the plans, service equipment items shall be provided for each service equipment enclosure as shown.
3. Connect to remote test switch mounted on lighting standards, sign post or structure when required.
4. Items No. 1 and 6 shall be isolated from the service equipment enclosure.
5. Meter sockets shall be 5 clip type.
6. The landing lug shall be suitable for multiple conductors.
7. Type V photoelectric control shall be used unless otherwise indicated on the plans.

STATE OF CALIFORNIA
DEPARTMENT OF TRANSPORTATION

ELECTRICAL SYSTEMS (SERVICE EQUIPMENT AND TYPICAL WIRING DIAGRAM, TYPE III-B SERIES)

NO SCALE

RSP ES-2E DATED OCTOBER 5, 2007 SUPERCEDES STANDARD PLAN ES-2E DATED MAY 1, 2006 - PAGE 407 OF THE STANDARD PLANS BOOK DATED MAY 2006.

REVISED STANDARD PLAN RSP ES-2E

7-10-07