FOR CONTRACT NO.: **05-0Q6204**

INFORMATIONAL HANDOUT

MATERIALS INFORMATION

SITE INVESTIGATION REPORT

MANUFACTUER'S DRAWINGS
Crash Cushion Systems

Quadguard II
TAU II
SCI-100

ROUTE: 05-SLO-101-7.8/12.5

PRELIMINARY SITE INVESTIGATION REPORT

SLO-101 CONCRETE MEDIAN BARRIER
PM 7.88 to 12.52
SAN LUIS OBISPO COUNTY, CALIFORNIA

PREPARED FOR:
CALTRANS DISTRICT 5
50 HIGUERA STREET
SAN LUIS OBISPO, CA 93401

PREPARED BY:
GEOCON CONSULTANTS, INC.
6671 BRISA STREET
LIVERMORE, CA 94550

GEOCON PROJECT NO. S9525-06-36
CALTRANS EA 05-0Q6201
CALTRANS PROJECT # 05-0000-0319

APRIL 2012

TABLE OF CONTENTS

PRELIMINARY SITE INVESTIGATION REPORT Page

REPORT LIMITATIONS i

PROJECT TEAM ii

1.0 INTRODUCTION 1
- 1.1 Project Description and Proposed Improvements 1
- 1.2 General Objectives 1

2.0 BACKGROUND 1
- 2.1 Hazardous Waste Determination Criteria 1
- 2.2 DTSC Variance 2
- 2.3 Environmental Screening Levels 3

3.0 SCOPE OF SERVICES 4
- 3.1 Pre-field Activities 4
- 3.2 Field Activities 4

4.0 INVESTIGATIVE METHODS 4
- 4.1 Sampling Procedures 4
- 4.2 Laboratory Analyses 5
- 4.3 Laboratory QA/QC 5

5.0 INVESTIGATIVE RESULTS 6
- 5.1 Subsurface Conditions 6
- 5.2 Laboratory Analytical Results 6
- 5.3 Laboratory Quality Assurance/Quality Control 6
- 5.4 Statistical Evaluation for Lead Detected in Soil Samples 6
  - 5.4.1 Calculating the UCLs for the Arithmetic Mean 7
  - 5.4.2 Correlation of Total and Soluble Lead 8

6.0 CONCLUSIONS 9
- 6.1 Lead in Soil 9
  - 6.1.1 Northbound US-101 (borings N1 through N38) 9
  - 6.1.2 Southbound US-101 (borings S1 through S20) 10
- 6.2 CAM 17 Metals in Soil 10
- 6.3 Worker Protection 11

TABLE OF CONTENTS (continued)

FIGURES

1. Vicinity Map
2-2f. Site Plan

TABLES

1. Summary of Soil Boring Coordinates
2. Summary of Lead and pH Results
3. Summary of CAM 17 Metals Results
4a-b. Summary of Lead Statistical Analysis

APPENDICES

A. DTSC Variance
B. Laboratory Reports and Chain-of-custody Documentation
C. Lead Regression and Statistical Analysis for Metals

REPORT LIMITATIONS

This report has been prepared exclusively for the State of California Department of Transportation (Caltrans) District 5. The information contained herein is only valid as of the date of the report and will require an update to reflect additional information obtained.

This report is not a comprehensive site characterization and should not be construed as such. The findings as presented in this report are predicated on the results of the limited sampling and laboratory testing performed. In addition, the information obtained is not intended to address potential impacts related to sources other than those specified herein. Therefore, the report should be deemed conclusive with respect to only the information obtained. We make no warranty, express or implied, with respect to the content of this report or any subsequent reports, correspondence or consultation. Geocon strived to perform the services summarized herein in accordance with the local standard of care in the geographic region at the time the services were rendered.

The contents of this report reflect the views of the author who is responsible for the facts and accuracy of the data presented herein. The contents do not necessarily reflect the official views or policies of the State of California or the Federal Highway Administration. This report does not constitute a standard, specification, or regulation.

GEOCON CONSULTANTS, INC.

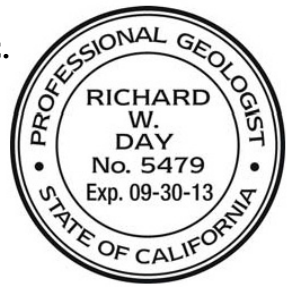

Richard Day, CEG, CHG
Senior Geologist

PROJECT TEAM

Contact	Affiliation	Responsibility
Gale Chew-Yep 559.243.3464 559.243.3426 fax gale_chew-yep@dot.ca.gov	Caltrans – District 5 Consultant Services 2015 Shields Ave., Suite 100 Fresno, California 93726	Contract Manager
Isaac Leyva 805.549.3487 805.549.3233 fax isaac.leyva@dot.ca.gov	Caltrans – District 5 Environmental Planning Branch/Unit 1403 50 Higuera Street San Luis Obispo, California 93401	Task Order Manager
Richard Day, CEG, CHG Luann Beadle 925.371.5900 925.371.5915 fax livermore@geoconinc.com	Geocon Consultants, Inc. 6671 Brisa Street Livermore, CA 94550 *(Caltrans Consultant)*	Project Management Sample Collection Field QA/QC Investigation Report
Doug Krause, CIH 530.758.6397 530.758.6506 fax dskrause@pacbell.net	Krause & Associates 216 F. Street Suite 162 Davis, CA 95616 (*Geocon Subconsultant*)	Health and Safety
Glen Gesmundo 702.307.3248 702.307.2691 fax glen@atl-labs.com	Advanced Technology Laboratories 3151 W. Post Rd. Las Vegas, NV 89118 *(Geocon Subcontractor)*	Soil Sample Analysis

PRELIMINARY SITE INVESTIGATION REPORT

1.0 INTRODUCTION

This Preliminary Site Investigation Report for the SLO-101 concrete median barrier project along United States Highway 101 (US-101) in San Luis Obispo County, California was prepared by Geocon Consultants, Inc. under California Department of Transportation (Caltrans) Contract No. 06A1580, Task Order No. 36 (TO-36), and Expenditure Authorization (EA) 05-0Q6201.

1.1 Project Description and Proposed Improvements

The project location consists of Caltrans right-of-way (ROW) along State Highway 101 south of the City of Arroyo Grande between Post Miles 7.88 to 12.52 in San Luis Obispo County, California. Caltrans proposes to construct concrete median barriers to prevent cross-over collisions between north and southbound traffic in the project area. The project location is depicted on the attached Vicinity Map, Figure 1.

1.2 General Objectives

The purpose of the site investigation was to evaluate concentrations of CAM 17 metals, particularly aerially deposited lead (ADL) in the project area.

Proposed construction activities will most likely require the disturbance of soil at the project location, which may be impacted with ADL, primarily due to historic leaded fuel emissions from automobile exhaust. The investigative results will be used by Caltrans to inform the construction contractor if soil impacted with metals is present within the project boundaries for construction worker health and safety, soil reuse evaluation and waste management/disposal purposes.

2.0 BACKGROUND

2.1 Hazardous Waste Determination Criteria

Regulatory criteria to classify a waste as California hazardous for handling and disposal purposes are contained in the CCR, Title 22, Division 4.5, Chapter 11, Article 3, §66261.24. Criteria to classify a waste as Resource, Conservation, and Recovery Act (RCRA) hazardous are contained in Chapter 40 of the Code of Federal Regulations (40 CFR), Section 261.

For waste containing metals, the waste is classified as California hazardous when: 1) the representative total metal content equals or exceeds the respective Total Threshold Limit Concentration (TTLC); or 2) the representative soluble metal content equals or exceeds the respective Soluble Threshold Limit Concentration (STLC) based on the standard Waste Extraction Test (WET). A waste has the potential of exceeding the STLC when the waste's total metal content is greater than or equal to ten times the

respective STLC value since the WET uses a 1:10 dilution ratio. Hence, when a total metal is detected at a concentration greater than or equal to ten times the respective STLC, and assuming that 100 percent of the total metals are soluble, soluble metal analysis is required. A material is classified as RCRA hazardous, or Federal hazardous, when the representative soluble metal content equals or exceeds the Federal regulatory level based on the Toxicity Characteristic Leaching Procedure (TCLP).

The above regulatory criteria are based on chemical concentrations. Wastes may also be classified as hazardous based on other criteria such as ignitability and corrosivity; however, for the purposes of this investigation, toxicity (i.e., representative lead concentrations) is the primary factor considered for waste classification since waste generated during the construction activities would not likely warrant testing for ignitability or other criteria. Waste that is classified as either California hazardous or RCRA hazardous requires management as a hazardous waste.

2.2 DTSC Variance

The Department of Toxic Substances Control (DTSC) issued a statewide Variance effective July 1, 2009, regarding the management of ADL-impacted soils within Caltrans right-of-way. Under the Variance, soil that is classified as a non-RCRA hazardous waste, based primarily on ADL content, may be suitable for reuse within Caltrans right-of-way. ADL soil that is classified as a RCRA hazardous waste is not eligible for reuse under the Variance and must be disposed of as a RCRA hazardous waste (Caltrans Type Z-3).

ADL soil reused under the Variance must always be at least five feet above the highest groundwater elevation and, depending on lead concentrations, must be covered with at least one foot of non-hazardous soil or a pavement structure. The ADL soil may not be placed in areas where it might contact groundwater or surface water (such as streams and rivers), and must be buried in locations that are protected from erosion that may result from storm water run-on and run-off.

Review of the statewide Variance indicates the following conditions regarding the reuse and management of ADL-impacted soil as fill material for construction and maintenance operations. If ADL soil meets the Variance criteria but is not intended to be reused within Caltrans right-of-way, then the excavated soil must be disposed of as a California hazardous waste (Caltrans Type Z-2).

Caltrans Type Y-1: ADL soil exhibiting a total lead concentration less than or equal to 1,411 milligrams per kilogram (mg/kg), a DI-WET (WET using deionized water as extractant) lead concentration less than or equal to 1.5 milligrams per liter (mg/l), and a pH value greater than or equal to 5.5 may be reused within the same Caltrans corridor and must be covered with at least one foot of non-hazardous soil.

Caltrans Type Y-2: ADL soil exhibiting a total lead concentration less than or equal to 1,411 mg/kg, a DI-WET lead concentration less than or equal to 1.5 mg/l, and a pH value greater than 5 and less than 5.5 may be reused within the same Caltrans corridor and must be covered and protected from infiltration by a pavement structure.

ADL soil exhibiting a total lead concentration less than or equal to 1,411 mg/kg, a DI-WET lead concentration greater than 1.5 mg/l and less than or equal to 150 mg/l, and a pH value greater than 5 may be reused within the same Caltrans corridor and must be covered and protected from infiltration by a pavement structure.

ADL soil exhibiting a total lead concentration greater than 1,411 mg/kg and less than or equal to 3,397 mg/kg, a DI-WET lead concentration less than or equal to 150 mg/l, and a pH value greater than 5 may be reused within the same Caltrans corridor and must be covered and protected from infiltration by a pavement structure.

Caltrans Type Z-2: ADL soil exhibiting a total lead concentration greater than 3,397 mg/kg, a DI-WET lead concentration greater than 150 mg/l, or a pH value less than or equal to 5 is not eligible for reuse under the Variance and must be disposed of as a California hazardous waste.

Caltrans Type Z-3: ADL soil exhibiting a TCLP lead concentration greater than or equal to 5 mg/l is not eligible for reuse under the Variance and must be disposed of as a RCRA hazardous waste.

A copy of the DTSC Variance is included as Appendix A.

2.3 Environmental Screening Levels

The San Francisco Bay Regional Water Quality Control Board (SFRWQCB) has prepared a technical report entitled *Screening For Environmental Concerns At Sites With Contaminated Soil and Groundwater, Interim Final* (May 2008), which presents Environmental Screening Levels (ESLs) for soil, groundwater, soil gas, and surface water, to assist in evaluating sites impacted by releases of hazardous chemicals. The ESLs are conservative values for more than 100 commonly detected contaminants, which may be used to compare with environmental data collected at a site. ESLs are strictly risk assessment tools and "not regulatory clean up standards." The presence of a chemical at concentrations in excess of an ESL does not necessarily indicate that adverse impacts to human health or the environment are occurring; this simply indicates that a potential for adverse risk may exist and that additional evaluation is or "may be" warranted (SFRWQCB, 2008).

The most conservative ESL table was used for this characterization: Table A – Shallow Soil (≤3 meters below ground surface; bgs) – Groundwater is a Current or Potential Source of Drinking Water. The respective ESLs are listed at the end of Tables 2 and 3 for comparative purposes.

3.0 SCOPE OF SERVICES

The scope of services performed under TO-36, EA 05-0Q6201 included the following:

3.1 Pre-field Activities

- Prepared the *Health and Safety Plan* dated January 2012.
- Obtained the services of Statewide Traffic Safety and Design to provide traffic control during field activities.
- Retained the services of Advanced Technology Laboratories (ATL), a Caltrans-approved and California-certified analytical laboratory, to perform the chemical analyses of soil samples.

3.2 Field Activities

The field investigation was performed on January 16 and 17, 2012, by Geocon staff. The following field activities were performed during the sampling efforts:

- Advanced 58 soil borings at the project location using hand-auger techniques. The borings were advanced to a maximum depth of 1.9 feet.
- Collected 165 soil samples for total lead analysis.
- Collected 9 soil samples for CAM 17 metals analysis.
- Collected 18 soil samples for pH analysis.
- Transported samples to a California-certified environmental laboratory for analysis under standard chain-of-custody (COC) documentation.

4.0 INVESTIGATIVE METHODS

4.1 Sampling Procedures

Soil samples were collected from 58 boring locations identified by the Caltrans TO Manager. Geocon recorded the boring locations using Differential Global Positioning System (DGPS) equipment. Boring coordinates are presented on Table 1 and boring locations are shown on the Site Plan, Figure 2-2f.

The soil samples for analysis of CAM 17 metals were collected in new glass jars. Soil samples for total lead analysis were collected into new resealable plastic bags. Sample containers were labeled and transported to a Caltrans-approved, State-certified environmental laboratory using standard COC documentation. Soil borings were backfilled to surface with soil cuttings.

Geocon provided QA/QC procedures during the field activities. These procedures included washing the sampling equipment with a Liqui-Nox® solution followed by a double rinse with deionized water. Decontamination water was disposed of to the ground surface within Caltrans right-of-way in a manner not to create runoff, away from drain inlets or potential water bodies.

4.2 Laboratory Analyses

Laboratory analyses were performed by ATL under 5-day turnaround-time (TAT). The laboratory reports and COC documentation are included in Appendix C.

The samples were analyzed as follows:

- 165 soil samples for total lead using Environmental Protection Agency (EPA) Test Method 6010 ICAP.
- 9 soil samples for CAM 17 metals according to Title 22 CCR, EPA Test Methods 6010 ICAP and 7471A.
- 43 soil samples were further analyzed for WET lead using EPA Test Method 7420.
- 86 soil samples were further analyzed for DI-WET lead using EPA Test Method 7420.
- 21 soil samples were further analyzed for TCLP lead using EPA Test Method 7420.
- 18 soil samples for pH using EPA Test Method 9045C.

4.3 Laboratory QA/QC

QA/QC procedures were performed for each method of analysis with specificity for each analyte listed in the test method's QA/QC. The laboratory QA/QC procedures included the following:

- One method blank for every ten samples, batch of samples or type of matrix, whichever was more frequent.
- One sample analyzed in duplicate for every ten samples, batch of samples or type of matrix, whichever was more frequent.
- One spiked sample for every ten samples, batch of samples or type of matrix; whichever was more frequent, with the spike made at ten times the detection limit or at the analyte level.

Prior to submitting the samples to the laboratory, the COC documentation was reviewed for accuracy and completeness.

5.0 INVESTIGATIVE RESULTS

5.1 Subsurface Conditions

Observations during field activities indicated that soil encountered in the borings at the project location generally consists of loose sand and gravel with some fine-grained silty sands. Groundwater was not encountered during the course of the investigation.

5.2 Laboratory Analytical Results

The analytical results are summarized in Tables 2 to 3 and are summarized below:

- The following metals were not detected above their respective laboratory reporting limits: antimony, beryllium, mercury, silver, and thallium.
- Total lead was reported at concentrations ranging from <5.0 to 2,100 mg/kg.
- WET lead was reported at concentrations ranging from 3.9 to 110 mg/l.
- DI-WET lead was reported at concentrations ranging from <0.25 to 7.1 mg/l.
- TCLP lead was reported at concentrations ranging from <0.25 to 5.3 mg/l.
- Remaining CAM 17 metals were reported for the samples at total concentrations below ten times their respective STLCs.
- pH was reported at concentrations ranging from 5.4 to 8.5 pH units.

5.3 Laboratory Quality Assurance/Quality Control

We reviewed the QA/QC results provided with the laboratory analytical reports. The data indicate non-detect results for the method blanks at or above reporting limits. The Matrix Spike (MS) and/or Matrix Spike Duplicate (MSD) was outside recovery criteria for several QC samples. The associated laboratory control sample recovery was acceptable. The relative percent differences (RPD) for MS/MSD was outside of recovery limits for several duplicate samples, however, the data were validated by Laboratory Control Samples (LCS). Remaining samples and internal laboratory QA/QC samples showed acceptable recoveries and relative percent differences (RPDs). Based on this limited data review, no additional qualifications of the soil data are necessary, and the data are of sufficient quality for the purposes of this report.

5.4 Statistical Evaluation for Lead Detected in Soil Samples

Statistical methods were applied to the total lead data to evaluate: 1) the upper confidence limits (UCLs) of the arithmetic means of the total lead concentrations for each sampling depth; and 2) if an acceptable correlation between total and WET lead concentrations exists that would allow the prediction of WET lead concentrations based on calculated UCLs.

The lead data for the Site were divided into two sample populations for statistical evaluation which consisted of the following:

- Northbound US-101 (borings N1 to N38)
- Southbound US-101 (Borings S1 to S20)

5.4.1 Calculating the UCLs for the Arithmetic Mean

The upper one-sided 90% and 95% UCLs of the arithmetic mean are defined as the values that, when calculated repeatedly for randomly drawn subsets of site data, equal or exceed the true mean 90% and 95% of the time, respectively. Statistical confidence limits are the classical tool for addressing uncertainties of a distribution mean. The UCLs of the arithmetic mean concentration are used as the mean concentrations because it is not possible to know the true mean due to the essentially infinite number of soil samples that could be collected from a site. The UCLs therefore account for uncertainties due to limited sampling data. As data become less limited at a site, uncertainties decrease, and the UCLs move closer to the true mean.

Non-parametric bootstrap techniques were used to calculate the UCLs. The bootstrap test results are included in Appendix C. The table below presents the calculated UCLs and statistics for the data sets.

Northbound US-101 (borings N1 to B38)

SAMPLE INTERVAL (feet)	TOTAL LEAD 90% UCL (mg/kg)	TOTAL LEAD 95% UCL (mg/kg)	TOTAL LEAD MEAN (mg/kg)	TOTAL LEAD MINIMUM (mg/kg)	TOTAL LEAD MAXIMUM (mg/kg)
0 to 0.65	216.9	226.1	177.3	16	890
0.65 to 1.3	212.8	222.5	172.2	2.55	720
1.3 to 1.9	183.9	197.7	125.8	2.5	1,700

Southbound US-101 (borings S1 to S20)

SAMPLE INTERVAL (feet)	TOTAL LEAD 90% UCL (mg/kg)	TOTAL LEAD 95% UCL (mg/kg)	TOTAL LEAD MEAN (mg/kg)	TOTAL LEAD MINIMUM (mg/kg)	TOTAL LEAD MAXIMUM (mg/kg)
0 to 0.65	220	230.3	177.8	17	450
0.65 to 1.3	391.4	428.7	260.2	2.5	2,100
1.3 to 1.9	142.2	151.5	105.3	2.5	430

5.4.2 Correlation of Total and Soluble Lead

Total and corresponding soluble lead concentrations are bivariate data with a linear structure. This linear structure should allow for the prediction of WET and TCLP soluble lead concentrations based on the UCLs calculated above in Section 5.4.1.

To estimate the degree of interrelation between total and corresponding soluble lead values (x and y, respectively), the *correlation coefficient [r]* is used. The correlation coefficient is a ratio that ranges from +1 to –1. A *correlation coefficient* of +1 indicates a perfect direct relationship between two variables; a *correlation coefficient* of –1 indicates that one variable changes inversely with relation to the other. Between the two extremes is a spectrum of less-than-perfect relationships, including zero, which indicates the lack of any sort of linear relationship at all.

The *correlation coefficient* was calculated for the 43 (x, y) data points (i.e., soil samples analyzed for both total lead [x] and WET lead [y]) from the Site. The resulting *coefficient of determination* (r^2) equaled 0.8281, which yields a corresponding *correlation coefficient* (r) of 0.91. A *correlation coefficient* greater than or equal to 0.8 is an acceptable indicator that a correlation exists. To achieve an acceptable correlation, the data point with the highest squared residual WET lead value (presented in Appendix D) was excluded from the regression analysis.

For the *correlation coefficient* that indicates a linear relationship between total and WET lead concentrations, it is possible to compute the line of dependence or a best-fit line between the two variables. A least squares method was used to find the equation of a best-fit line (regression line) by forcing the y-intercept equal to zero since that is a known point. The equation of the regression line was determined to be $y = 0.05432(x)$, where x represents total lead concentrations and y represents predicted WET lead concentrations. This equation was used to estimate the expected WET lead concentrations for the total lead UCLs for the data set (see Section 5.4.1). Regression analysis results and a scatter plot depicting the (x, y) data points along with the regression line are included in Appendix C. The predicted WET lead concentrations are summarized in Tables 4a and 4b.

Linear regression analyses were also performed to establish the linear relationships between total and DI-WET lead and between total and TCLP lead. The DI-WET and TCLP linear regressions are included in Appendix C.

6.0 CONCLUSIONS

Waste classifications are evaluated based on the 90% UCL of the lead content for the relevant excavation depths; this has historically been considered sufficient to satisfy a good faith effort by the EPA as discussed in SW-846. Risk assessment characterization is based on the 95% UCL of the lead content in the waste for the relevant depths; this is in accordance with the Risk Assessment Guidance for Superfund (RAGS) Volume 1 Documentation for Exposure Assessment. Per Caltrans, the 90% UCLs are to be used to evaluate onsite reuse and the 95% UCLs are to be used to evaluate offsite disposal.

6.1 Lead in Soil

6.1.1 Northbound US-101 (borings N1 through N38)

The following table summarizes the predicted waste classification for excavated soil based on the calculated weighted averages of the total lead UCLs and predicted WET lead concentrations for data collected from this portion of the Site. Weighted averages are calculated by using the total lead concentration for each 0.5-foot depth interval as the value for the underlying 0.5-foot depth interval (unless a sample was collected from the underlying depth interval). The total and WET lead calculations are summarized below and in Table 4a.

Excavation Depth	90% UCL Total Lead (mg/kg)	90% UCL Predicted WET Lead (mg/l)	95% UCL Total Lead (mg/kg)	Waste Classification
0 to 0.65 ft	217	**11.8**	226	**Hazardous**
Underlying soil (0.65 to 1.9 ft)	*198*	***10.8***	*210*	***Hazardous***
0 to 1.3 ft	215	**11.7**	224	**Hazardous**
Underlying Soil (1.3 to 1.9 ft)	*184*	***10.0***	*198*	***Hazardous***
0 to 1.9 ft	205	**11.1**	215	**Hazardous**

90% UCL applicable for waste classification and onsite reuse; 95% UCL applicable for risk assessment and offsite disposal

Based on the data presented in the above table, soil excavated to a depth of 1.9 feet would be classified as a California hazardous waste since the 90% UCL-predicted WET lead concentration is greater than the lead STLC of 5.0 mg/l. Based on the TCLP lead results, excavated soil would not be classified as a RCRA hazardous waste. Based on DI-WET lead concentrations and pH results, soil excavated from 0 to 1.9 feet may be reused onsite (as Caltrans Type Y-1) in accordance with the DTSC Variance by placing the excavated soil under clean fill or pavement.

6.1.2 Southbound US-101 (borings S1 through S20)

The following table summarizes the predicted waste classification for excavated soil based on the calculated weighted averages of the total lead UCLs and predicted WET lead concentrations for data collected from this portion of the Site. Weighted averages are calculated by using the total lead concentration for each 0.5-foot depth interval as the value for the underlying 0.5-foot depth interval (unless a sample was collected from the underlying depth interval). The total and WET lead calculations are summarized below and in Table 4b.

Excavation Depth	90% UCL Total Lead (mg/kg)	90% UCL Predicted WET Lead (mg/l)	95% UCL Total Lead (mg/kg)	Waste Classification
0 to 0.65 ft	220	**12.0**	230	**Hazardous**
Underlying soil (0.65 to 1.8 ft)	*267*	***14.5***	*290*	***Hazardous***
0 to 1.3 ft	306	**16.6**	330	**Hazardous**
Underlying Soil (1.3 to 1.8 ft)	*142*	***7.7***	*152*	***Hazardous***
0 to 1.8 ft	251	**13.6**	270	**Hazardous**

90% UCL applicable for waste classification and onsite reuse; 95% UCL applicable for risk assessment and offsite disposal

Based on the data presented in the above table, soil excavated to a depth of 1.9 feet would be classified as a California hazardous waste since the 90% UCL-predicted WET lead concentration is greater than the lead STLC of 5.0 mg/l. Based on the TCLP lead results, excavated soil would not be classified as a RCRA hazardous waste. Based on DI-WET lead concentrations and pH results, soil excavated from 0 to 1.9 feet may be reused onsite (as Caltrans Type Y-1) in accordance with the DTSC Variance by placing the excavated soil under clean fill or pavement.

6.2 CAM 17 Metals in Soil

The CAM 17 metals concentrations in site soil were compared to ESLs (SFRWQCB, May 2008, Tables A and K-3) and published background levels typically present in California soils as presented in *Background Concentrations of Trace and Major Elements in California Soils* (Kearney Foundation of Soil Science, Division of Agriculture and Natural Resources, University of California, March, 1996.

Arsenic, lead, and vanadium were reported with concentrations equal to or greater than one or more of their respective ESL values. ESLs and published background concentrations for these metals are summarized in the table below:

Metal	Mean	Maximum	Shallow Soil Residential ESL	Shallow Soil Commercial/ Industrial ESL	Worker Direct Exposure ESL	PUBLISHED BACKGROUND MEAN[1]	PUBLISHED BACKGROUND RANGE [1]
Arsenic	3.01	4.4	0.39	1.6	15	3.5	0.6 to 11.0
Lead	166	2,100	200	750	750	11.43	6.8 to 16.1
Vanadium	36	61	16	200	770	112	39 to 288

Concentrations reported in mg/kg

1 Kearney Foundation of Soil Science, March 1996

The reported arsenic concentrations in the soil samples exceed the shallow soil residential and commercial/industrial land use ESLs, however, it is within the published background range and below the construction worker direct exposure ESL. The SFRWQCB *Update to Environmental Screening Levels (ESLs) Technical Document* (*November 2007, Revised May 2008)* states that ambient background concentrations of arsenic typically exceed risk-based screening levels. In such instances, it may be more appropriate to compare site data to regionally-specific established background levels.

The maximum reported lead concentration in soil exceeds the residential, commercial/industrial, and construction worker direct exposure ESLs, and is above reported background ranges.

The reported vanadium concentrations detected in the soil samples exceed the shallow soil residential land use ESL, however, the concentrations are below the commercial/industrial and construction exposure ESLs, and within the published background range.

Based on the reported arsenic, lead, or vanadium concentrations, offsite reuse or disposal of excavated soil may be restricted based on metals content depending on proposed use.

6.3 Worker Protection

The contractor(s) should prepare a project-specific health and safety plan to prevent or minimize worker exposure to metals in soil. The plan should include protocols for environmental and personnel monitoring, requirements for personal protective equipment, and other health and safety protocols and procedures for the handling of soil.

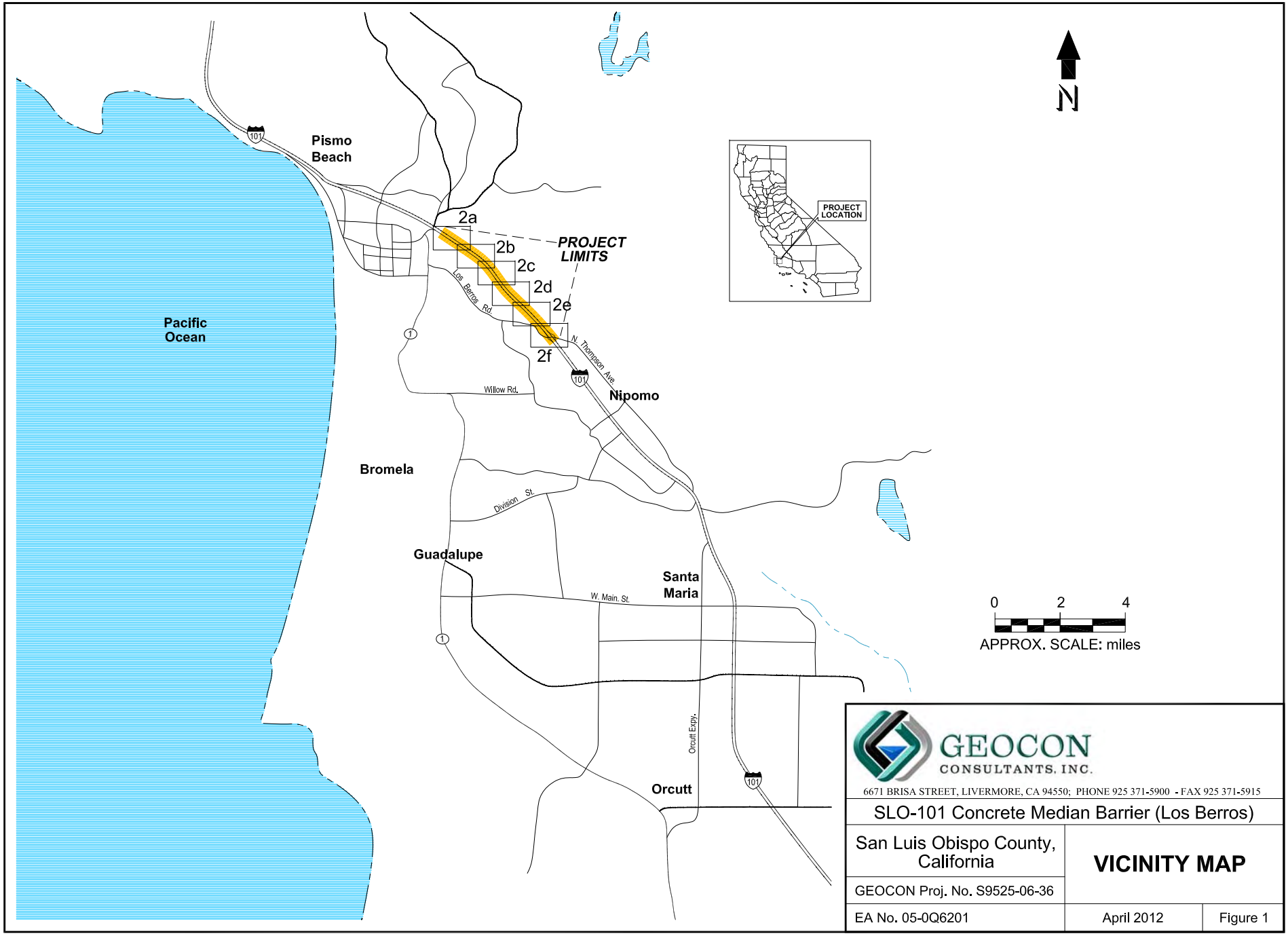

GEOCON CONSULTANTS, INC.

6671 BRISA STREET, LIVERMORE, CA 94550; PHONE 925 371-5900 - FAX 925 371-5915

SLO-101 Concrete Median Barrier (Los Berros)

San Luis Obispo County, California

VICINITY MAP

GEOCON Proj. No. S9525-06-36

EA No. 05-0Q6201 | April 2012 | Figure 1

SITE0312

GEOCON CONSULTANTS, INC.

6671 BRISA STREET, LIVERMORE, CA 94550; PHONE 925 371-5900 - FAX 925 371-5915

SLO-101 Concrete Median Barrier (Los Berros)

San Luis Obispo County, California

GEOCON Proj. No. S9525-06-36

SITE PLAN

EA No. 05-0Q6201 | April 2012 | Figure 2a

SITE0312

GEOCON CONSULTANTS, INC.

6671 BRISA STREET, LIVERMORE, CA 94550; PHONE 925 371-5900 - FAX 925 371-5915

SLO-101 Concrete Median Barrier (Los Berros)

San Luis Obispo County, California

SITE PLAN

GEOCON Proj. No. S9525-06-36

EA No. 05-0Q6201 | April 2012 | Figure 2b

SITE0312

GEOCON CONSULTANTS, INC.

6671 BRISA STREET, LIVERMORE, CA 94550; PHONE 925 371-5900 - FAX 925 371-5915

SLO-101 Concrete Median Barrier (Los Berros)

San Luis Obispo County, California

SITE PLAN

GEOCON Proj. No. S9525-06-36

EA No. 05-0Q6201

April 2012

Figure 2c

SITE0312

GEOCON CONSULTANTS, INC.

6671 BRISA STREET, LIVERMORE, CA 94550; PHONE 925 371-5900 - FAX 925 371-5915

SLO-101 Concrete Median Barrier (Los Berros)

San Luis Obispo County, California

SITE PLAN

GEOCON Proj. No. S9525-06-36

EA No. 05-0Q6201

April 2012

Figure 2d

SITE0312

GEOCON CONSULTANTS, INC.

6671 BRISA STREET, LIVERMORE, CA 94550; PHONE 925 371-5900 - FAX 925 371-5915

SLO-101 Concrete Median Barrier (Los Berros)

San Luis Obispo County, California

SITE PLAN

GEOCON Proj. No. S9525-06-36

EA No. 05-0Q6201 | April 2012 | Figure 2e

SITE0312

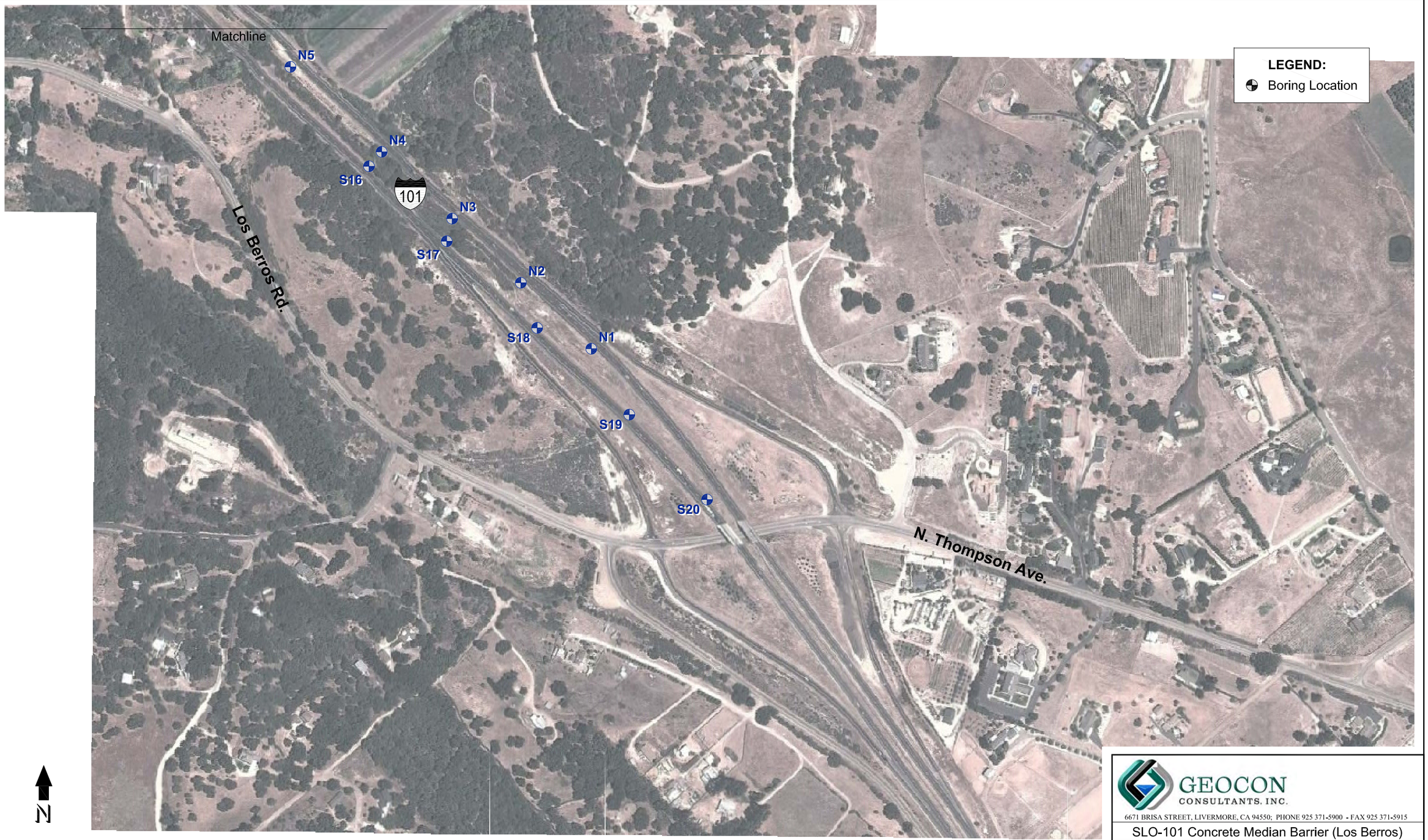

N

0 200 400
SCALE: feet

GEOCON CONSULTANTS, INC.
6671 BRISA STREET, LIVERMORE, CA 94550; PHONE 925 371-5900 - FAX 925 371-5915

SLO-101 Concrete Median Barrier (Los Berros)		
San Luis Obispo County, California	SITE PLAN	
GEOCON Proj. No. S9525-06-36		
EA No. 05-0Q6201	April 2012	Figure 2f

SITE0312

TABLE 1
Summary of Soil Boring Coordinates
SLO-101 Concrete Median Barrier
San Luis Obispo County, California

Boring	Latitude	Longitude
N1	35.074098	-120.518522
N2	35.074892	-120.519568
N3	35.075676	-120.520606
N4	35.076505	-120.521711
N5	35.077540	-120.523097
N6	35.078339	-120.524151
N7	35.079246	-120.525351
N8	35.080309	-120.526534
N9	35.081466	-120.527658
N10	35.082609	-120.528761
N11	35.083299	-120.529431
N12	35.086898	-120.533666
N13	35.087196	-120.534062
N14	35.087999	-120.535326
N15	35.088967	-120.536758
N16	35.089814	-120.538034
N17	35.090834	-120.539450
N18	35.091692	-120.540835
N19	35.092655	-120.542150
N20	35.093457	-120.542987
N21	35.094608	-120.543829
N22	35.096128	-120.544802
N23	35.097059	-120.545385
N24	35.098251	-120.546163
N25	35.099428	-120.546914
N26	35.100685	-120.547704
N27	35.101893	-120.548579
N28	35.102626	-120.549231
N29	35.104667	-120.551644
N30	35.105498	-120.552556
N31	35.106127	-120.553319
N32	35.107451	-120.555127
N33	35.114526	-120.570545
N34	35.114868	-120.571016
N35	35.115180	-120.571517
N36	35.115538	-120.572034
N37	35.115962	-120.572697
N38	35.116313	-120.573267

TABLE 1
Summary of Soil Boring Coordinates
SLO-101 Concrete Median Barrier
San Luis Obispo County, California

Boring	Latitude	Longitude
S1	35.108412	-120.556999
S2	35.107623	-120.555637
S3	35.105930	-120.553600
S4	35.104601	-120.552015
S5	35.102407	-120.549573
S6	35.100837	-120.548277
S7	35.099354	-120.547313
S8	35.093338	-120.543452
S9	35.092345	-120.542637
S10	35.091277	-120.541467
S11	35.090279	-120.540126
S12	35.088693	-120.537409
S13	35.088064	-120.536350
S14	35.087197	-120.534883
S15	35.086447	-120.533588
S16	35.076259	-120.521919
S17	35.075362	-120.520715
S18	35.074328	-120.519332
S19	35.073282	-120.517953
S20	35.072300	-120.516810

TABLE 2
Summary of Lead and pH Results
SLO-101 Concrete Median Barrier
San Luis Obispo County, California

Sample ID	Sample Depth	Total Lead (mg/kg)	WET Lead (mg/l)	DI-WET Lead (mg/l)	TCLP Lead (mg/l)	pH
N1-0	0 to 0.65	210	14	0.57	---	---
N1-0.65	0.65 to 1.3	100	---	0.37	---	---
N1-1.3	1.3 to 1.9	76	---	---	---	---
N2-0	0 to 0.65	450	27	1.6	---	---
N2-0.65	0.65 to 1.3	98	---	---	---	---
N2-1.3	1.3 to 1.9	170	---	1.0	---	---
N3-0	0 to 0.65	360	25	0.49	---	---
N3-0.65	0.65 to 1.3	110	6.4	0.58	---	---
N3-1.3	1.3 to 1.9	81	---	---	---	7.4
N4-0	0 to 0.65	100	5.3	<0.25	---	---
N4-0.65	0.65 to 1.3	50	---	---	---	---
N4-1.3	1.3 to 1.9	12	---	---	---	---
N5-0	0 to 0.65	140	8.5	<0.25	---	5.4
N5-0.65	0.65 to 1.3	160	9.0	0.98	---	---
N5-1.3	1.3 to 1.9	96	---	---	---	---
N6-0	0 to 0.65	290	19	0.42	---	---
N6-0.65	0.65 to 1.3	270	12	<0.25	---	---
N6-1.3	1.3 to 1.9	180	---	<0.25	---	---
N7-0	0 to 0.65	700	---	4.9	5.3	---
N7-0.65	0.65 to 1.3	640	---	5.1	1.0	---
N7-1.3	1.3 to 1.9	230	20	0.29	---	---
N8-0	0 to 0.65	190	---	<0.25	---	---
N8-0.65	0.65 to 1.3	510	---	0.84	0.72	---
N8-1.3	1.3 to 1.9	78	---	---	---	---
N9-0	0 to 0.65	350	---	1.4	<0.25	---
N9-0.65	0.65 to 1.3	600	19	2.2	<0.25	---
N9-1.3	1.3 to 1.9	13	---	---	---	---
N10-0	0 to 0.65	59	---	---	---	---
N10-0.65	0.65 to 1.3	100	---	0.95	---	---
N10-1.3	1.3 to 1.9	53	---	---	---	---
N11-0	0 to 0.65	27	---	---	---	---
N11-0.65	0.65 to 1.3	16	---	---	---	---
N11-1.3	1.3 to 1.9	<5.1	---	---	---	---

TABLE 2
Summary of Lead and pH Results
SLO-101 Concrete Median Barrier
San Luis Obispo County, California

Sample ID	Sample Depth	Total Lead (mg/kg)	WET Lead (mg/l)	DI-WET Lead (mg/l)	TCLP Lead (mg/l)	pH
N12-0	0 to 0.65	190	14	0.32	---	---
N12-0.65	0.65 to 1.3	67	---	---	---	---
N12-1.3	1.3 to 1.9	54	---	---	---	---
N13-0	0 to 0.65	22	---	---	---	---
N13-0.65	0.65 to 1.3	92	---	---	---	---
N13-1.3	1.3 to 1.9	200	6.4	0.80	---	---
N14-0	0 to 0.65	64	---	---	---	7.1
N14-0.65	0.65 to 1.3	90	---	---	---	7.6
N14-1.3	1.3 to 1.9	120	4.4	0.60	---	---
N15-0	0 to 0.65	130	---	0.81	---	7.4
N15-0.65	0.65 to 1.3	100	8.4	0.35	---	---
N15-1.3	1.3 to 1.9	1,700	34	2.0	0.90	---
N16-0	0 to 0.65	58	---	---	---	---
N16-0.65	0.65 to 1.3	63	---	---	---	---
N16-1.3	1.3 to 1.9	<5.0	---	---	---	---
N17-0	0 to 0.65	180	14	<0.25	---	---
N17-0.65	0.65 to 1.3	120	---	0.50	---	---
N17-1.3	1.3 to 1.9	91	---	---	---	---
N18-0	0 to 0.65	430	---	<0.25	<0.25	---
N18-0.65	0.65 to 1.3	140	---	<0.25	---	---
N18-1.3	1.3 to 1.9	190	---	2.1	---	---
N19-0	0 to 0.65	89	---	---	---	---
N19-0.65	0.65 to 1.3	660	34	0.84	0.64	7.7
N19-1.3	1.3 to 1.9	<5.0	---	---	---	---
N20-0	0 to 0.65	890	---	1.3	0.91	---
N20-0.65	0.65 to 1.3	720	47	2.4	2.2	7.1
N20-1.3	1.3 to 1.9	220	---	1.9	---	7.8
N21-0	0 to 0.65	100	---	0.36	---	---
N21-0.65	0.65 to 1.3	78	---	---	---	---
N21-1.3	1.3 to 1.9	140	6.6	<0.25	---	---
N22-0	0 to 0.65	150	8.3	<0.25	---	---
N22-0.65	0.65 to 1.3	46	---	---	---	---
N22-1.3	1.3 to 1.9	33	---	---	---	---

TABLE 2
Summary of Lead and pH Results
SLO-101 Concrete Median Barrier
San Luis Obispo County, California

Sample ID	Sample Depth	Total Lead (mg/kg)	WET Lead (mg/l)	DI-WET Lead (mg/l)	TCLP Lead (mg/l)	pH
N23-0	0 to 0.65	100	3.9	<0.25	---	---
N23-0.65	0.65 to 1.3	14	---	---	---	---
N23-1.3	1.3 to 1.9	20	---	---	---	---
N24-0	0 to 0.65	80	---	---	---	7.3
N24-0.65	0.65 to 1.3	16	---	---	---	---
N24-1.3	1.3 to 1.9	46	---	---	---	---
N25-0	0 to 0.65	180	---	<0.25	---	---
N25-0.65	0.65 to 1.3	<5.1	---	---	---	7.4
N25-1.3	1.3 to 1.9	<10	---	---	---	---
N26-0	0 to 0.65	30	---	---	---	---
N26-0.65	0.65 to 1.3	300	---	<0.25	<0.25	8.1
N26-1.3	1.3 to 1.9	45	---	---	---	---
N27-0	0 to 0.65	310	7.6	<0.25	---	---
N27-0.65	0.65 to 1.3	190	6.2	<0.25	---	---
N27-1.3	1.3 to 1.9	78	---	---	---	---
N28-0	0 to 0.65	160	---	<0.25	---	---
N28-0.65	0.65 to 1.3	250	---	0.34	---	---
N28-1.3	1.3 to 1.9	98	---	---	---	---
N29-0	0 to 0.65	65	---	---	---	---
N29-0.65	0.65 to 1.3	12	---	---	---	---
N29-1.3	1.3 to 1.9	210	---	0.69	---	8.4
N30-0	0 to 0.65	72	---	---	---	---
N30-0.65	0.65 to 1.3	22	---	---	---	---
N30-1.3	1.3 to 1.9	<5.0	---	---	---	---
N31-0	0 to 0.65	25	---	---	---	---
N31-0.65	0.65 to 1.3	<10	---	---	---	---
N31-1.3	1.3 to 1.9	6.9	---	---	---	---
N32-0	0 to 0.65	190	---	<0.25	---	---
N32-0.65	0.65 to 1.3	99	---	---	---	---
N32-1.3	1.3 to 1.9	28	---	---	---	---
N33-0	0 to 0.65	69	---	---	---	---
N33-0.65	0.65 to 1.3	51	---	---	---	---
N33-1.3	1.3 to 1.9	29	---	---	---	---

TABLE 2
Summary of Lead and pH Results
SLO-101 Concrete Median Barrier
San Luis Obispo County, California

Sample ID	Sample Depth	Total Lead (mg/kg)	WET Lead (mg/l)	DI-WET Lead (mg/l)	TCLP Lead (mg/l)	pH
N34-0	0 to 0.65	75	---	---	---	---
N34-0.65	0.65 to 1.3	61	---	---	---	---
N34-1.3	1.3 to 1.9	14	---	---	---	---
N35-0	0 to 0.65	16	---	---	---	---
N35-0.65	0.65 to 1.3	120	9.0	<0.25	---	---
N35-1.3	1.3 to 1.9	150	---	<0.25	---	---
N36-0	0 to 0.65	93	---	---	---	---
N36-0.65	0.65 to 1.3	100	---	<0.25	---	---
N36-1.3	1.3 to 1.9	<5.0	---	---	---	---
N37-0	0 to 0.65	22	---	---	---	---
N37-0.65	0.65 to 1.3	280	---	1.1	0.44	---
N37-1.3	1.3 to 1.9	180	11	0.36	---	---
N38-0	0 to 0.65	72	---	---	---	---
N38-0.65	0.65 to 1.3	190	8.0	2.0	---	---
N38-1.3	1.3 to 1.9	120	---	<0.25	---	---
S1-0	0 to 0.65	340	23	0.47	---	---
S1-0.65	0.65 to 1.3	60	---	---	---	8.5
S1-1.3	1.3 to 1.9	130	7.3	0.30	---	---
S2-0	0 to 0.65	310	35	1.1	---	---
S2-0.65	0.65 to 1.3	220	---	0.42	---	---
S2-1.3	1.3 to 1.9	170	---	<0.25	---	---
S3-0	0 to 0.65	420	17	0.47	---	---
S3-0.65	0.65 to 1.3	2,100	110	7.1	4.8	---
S3-1.3	1.3 to 1.9	430	---	0.59	0.54	---
S4-0	0 to 0.65	190	9.9	0.58	---	---
S4-0.65	0.65 to 1.3	570	13	1.4	0.94	---
S4-1.3	1.3 to 1.9	22	---	---	---	---
S5-0	0 to 0.65	130	---	<0.25	---	7.8
S5-0.65	0.65 to 1.3	160	---	0.39	---	---
S5-1.3	1.3 to 1.9	16	---	---	---	---
S6-0	0 to 0.65	55	---	---	---	---
S6-0.65	0.65 to 1.3	23	---	---	---	---
S6-1.3	1.3 to 1.9	18	---	---	---	---

TABLE 2
Summary of Lead and pH Results
SLO-101 Concrete Median Barrier
San Luis Obispo County, California

Sample ID	Sample Depth	Total Lead (mg/kg)	WET Lead (mg/l)	DI-WET Lead (mg/l)	TCLP Lead (mg/l)	pH
S7-0	0 to 0.65	100	---	0.26	---	7.0
S7-0.65	0.65 to 1.3	13	---	---	---	---
S7-1.3	1.3 to 1.9	<5.0	---	---	---	---
S8-0	0 to 0.65	62	---	---	---	---
S8-0.65	0.65 to 1.3	63	---	---	---	---
S8-1.3	1.3 to 1.9	29	---	---	---	---
S9-0	0 to 0.65	29	---	---	---	---
S9-0.65	0.65 to 1.3	25	---	---	---	---
S9-1.3	1.3 to 1.9	120	8.4	1.0	---	---
S10-0	0 to 0.65	43	---	---	---	---
S10-0.65	0.65 to 1.3	160	4.5	<0.25	---	---
S10-1.3	1.3 to 1.9	52	---	---	---	---
S11-0	0 to 0.65	69	---	---	---	---
S11-0.65	0.65 to 1.3	15	---	---	---	7.9
S11-1.3	1.3 to 1.9	<9.9	---	---	---	---
S12-0	0 to 0.65	450	---	0.94	0.30	---
S12-0.65	0.65 to 1.3	230	---	0.72	<0.25	7.0
S12-1.3	1.3 to 1.9	390	---	0.48	<0.25	---
S13-0	0 to 0.65	49	---	---	---	---
S13-0.65	0.65 to 1.3	140	6.7	<0.25	---	---
S13-1.3	1.3 to 1.9	320	---	0.53	0.64	---
S14-0	0 to 0.65	17	---	---	---	---
S14-0.65	0.65 to 1.3	170	4.7	<0.25	---	---
S14-1.3	1.3 to 1.9	120	---	<0.25	---	---
S15-0	0 to 0.65	250	22	0.36	---	---
S15-0.65	0.65 to 1.3	660	---	0.65	0.73	---
S15-1.3	1.3 to 1.9	140	---	0.83	---	7.1
S16-0	0 to 0.65	300	---	0.92	<0.25	---
S16-0.65	0.65 to 1.3	82	---	---	---	---
S16-1.3	1.3 to 1.9	57	---	---	---	---
S17-0	0 to 0.65	62	---	---	---	---
S17-0.65	0.65 to 1.3	160	---	0.59	---	---
S17-1.3	1.3 to 1.9	59	---	---	---	---

TABLE 2
Summary of Lead and pH Results
SLO-101 Concrete Median Barrier
San Luis Obispo County, California

Sample ID	Sample Depth	Total Lead (mg/kg)	WET Lead (mg/l)	DI-WET Lead (mg/l)	TCLP Lead (mg/l)	pH
S18-0	0 to 0.65	120	8.5	<0.25	---	---
S18-0.65	0.65 to 1.3	230	9.3	<0.25	---	---
S18-1.3	1.3 to 1.9	<10	---	---	---	---
S19-0	0 to 0.65	450	56	3.3	---	---
S19-0.65	0.65 to 1.3	<5.0	---	---	---	---
S19-1.3	1.3 to 1.9	<5.0	---	---	---	---
S20-0	0 to 0.65	110	13	0.44	---	---
S20-0.65	0.65 to 1.3	120	---	1.2	---	---
S20-1.3	1.3 to 1.9	18	---	---	---	---
	Hazardous Waste Criteria					
	TTLC (mg/kg)	1,000	---	---	---	---
	STLC (mg/l)	---	5.0	---	---	---
	TCLP (mg/l)	---	---	---	5.0	---
	ESLs					
	Residential Land Use	200	---	---	---	---
	Comm/Ind Land Use	750	---	---	---	---
	Construction Exposure	750	---	---	---	---

Notes:
mg/kg = Milligrams per kilogram
mg/l = Milligrams per liter
--- = Not analyzed or no standard
< = Not detected above the stated laboratory reporting limit
WET = Waste Extraction Test using citric acid as the extraction fluid
DI-WET = Waste Extraction Test using deionized water as the extraction fluid
TCLP = Toxicity Characteristic Leaching Procedure
TTLC = Total Threshold Limit Concentration
STLC = Soluble Threshold Limit Concentration
ESLs = Environmental Screening Levels, Tables A and K-3, SFRWQCB, Revised May 2008.

TABLE 3
Summary of CAM 17 Metals Results
SLO-101 Concrete Median Barrier
San Luis Obispo County, California

Sample ID	Sample Depth (ft)	Antimony	Arsenic	Barium	Beryllium	Cadmium	Chromium	Cobalt	Copper	Lead	Mercury	Molybdenum	Nickel	Selenium	Silver	Thallium	Vanadium	Zinc
N2-0	0 to 0.65	<2.0	4.4	75	<1.0	1.9	18	3.7	28	450	<0.099	2.1	21	<1.0	<1.0	<1.0	29	120
N8-0.65	0.65 to 1.3	<2.0	1.2	42	<1.0	<1.0	21	15	30	510	<0.10	<1.0	22	2.4	<1.0	<1.0	61	74
N14-1.3	1.3 to 1.9	<2.0	3.8	71	<1.0	1.4	17	4.2	13	120	<0.099	1.2	23	<1.0	<1.0	<1.0	27	51
N20-0	0 to 0.65	<2.0	2.8	95	<1.0	<1.0	20	4.7	22	890	<0.099	1.3	16	<1.0	<1.0	<1.0	28	150
N26-0.65	0.65 to 1.3	<2.0	2.9	61	<1.0	<1.0	21	12	26	300	<0.10	<1.0	22	2.0	<1.0	<1.0	43	60
N34-1.3	1.3 to 1.9	<2.0	3.2	64	<1.0	<1.0	35	2.1	9.0	14	<0.098	<1.0	20	<1.0	<1.0	<1.0	40	32
S1-0	0 to 0.65	<2.0	2.4	74	<1.0	<1.0	21	9.2	32	340	<0.098	<1.0	20	1.8	<1.0	<1.0	37	160
S10-0.65	0.65 to 1.3	<2.0	3.4	80	<1.0	<1.0	14	5.1	21	160	<0.099	1.2	17	1.2	<1.0	<1.0	28	65
S20-1.3	1.3 to 1.9	<2.0	3.0	54	<1.0	<1.0	16	6.0	12	18	<0.099	2.4	30	<1.0	<1.0	<1.0	31	41
ESLs																		
Residential Land Use		6.3	0.39	750	4.0	1.7	750	40	230	200	1.3	40	150	10	20	1.3	16	600
Comm/Ind Land Use		40	1.6	1,500	8.0	7.4	750	80	230	750	10	40	150	10	40	16	200	600
Construction Exposure		310	15	2,600	98	39	1,200,000	94	310,000	750	58	78	260	3,900	3,900	62	770	230,000
Hazardous Waste Criteria																		
TTLC		500	500	10,000	75	100	2,500*	8,000	2,500	1,000	20	3,500	2,000	100	500	700	2,400	5,000
STLC		15	5.0	100	0.75	1.0	5.0*	80	25	5.0	0.2	350	20	1.0	5.0	7.0	24	250
TCLP		---	5.0	100	---	1.0	6.0	---	---	5.0	0.2	---	---	1.0	5.0	---	---	---

Notes:

Results are shown in milligrams per kilogram (mg/kg).
* = ESL Values listed for chromium are for Chromium III, as there is no standard for total chromium
< = Analyte was not detected above the stated laboratory reporting limit.
ESLs = Environmental Screening Levels, Tables A and K-3, SFRWQCB, Revised May 2008.
TTLC = total threshold limit concentration
STLC = soluble threshold limit concentration
TCLP = toxicity characteristic leaching procedure
--- = not analyzed or no standard exists for this compound

TABLE 4a
Summary of Lead Statistical Analysis
SLO-101 Concrete Median Barrier
San Luis Obispo County, California

Northbound US-101 (borings N1 to N38)

TOTAL LEAD

	90% UCL	95% UCL
0 ft	216.9	226.1
0.65 ft	212.8	222.5
1.3 ft	183.9	197.7

EXCAVATION SCENARIOS

	Weighted Averages		
Excavation Depth	**90% UCL Total Lead (mg/kg)**	**WET Lead* (mg/l)**	**95% UCL Total Lead (mg/kg)**
0 to 0.65 ft	217	11.8	226
Underlying Soil (0.65 to 1.9 ft)	*198*	*10.8*	*210*
0 to 1.3 ft	215	11.7	224
Underlying Soil (1.3 to 1.9 ft)	*184*	*10.0*	*198*
0 to 1.9 ft	205	11.1	215

Notes:
UCL = Upper Confidence Limit (90% UCL is applicable for waste classification; 95% UCL applicable for risk assessment)
mg/kg = milligrams per kilogram
mg/l = milligrams per liter
* = WET lead concentrations are predicted using slope of regression line,
where y = predicted WET lead and x = total lead.

Regression Line Slope: $y = 0.0543 \; x$

TABLE 4b
Summary of Lead Statistical Analysis
SLO-101 Concrete Median Barrier
San Luis Obispo County, California

Southbound US-101 (borings S1 to S20)

TOTAL LEAD

	90% UCL	95% UCL
0 ft	220.0	230.3
0.65 ft	391.4	428.7
1.3 ft	142.2	151.5

EXCAVATION SCENARIOS

	Weighted Averages		
Excavation Depth	**90% UCL Total Lead (mg/kg)**	**WET Lead* (mg/l)**	**95% UCL Total Lead (mg/kg)**
0 to 0.65 ft	220	12.0	230
Underlying Soil (0.65 to 1.9 ft)	*267*	*14.5*	*290*
0 to 1.3 ft	306	16.6	330
Underlying Soil (1.3 to 1.9 ft)	*142*	*7.7*	*152*
0 to 1.9 ft	251	13.6	270

Notes:
UCL = Upper Confidence Limit (90% UCL is applicable for waste classification; 95% UCL applicable for risk assessment)
mg/kg = milligrams per kilogram
mg/l = milligrams per liter
* = WET lead concentrations are predicted using slope of regression line,
where y = predicted WET lead and x = total lead.

Regression Line Slope: $y = 0.0543 \; x$

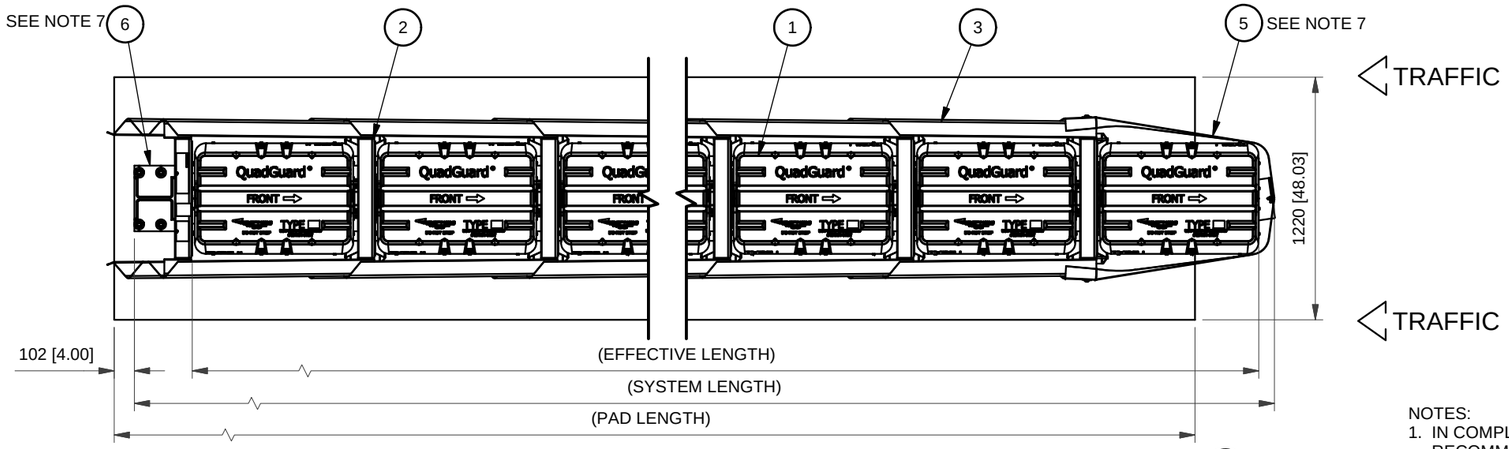

PLAN

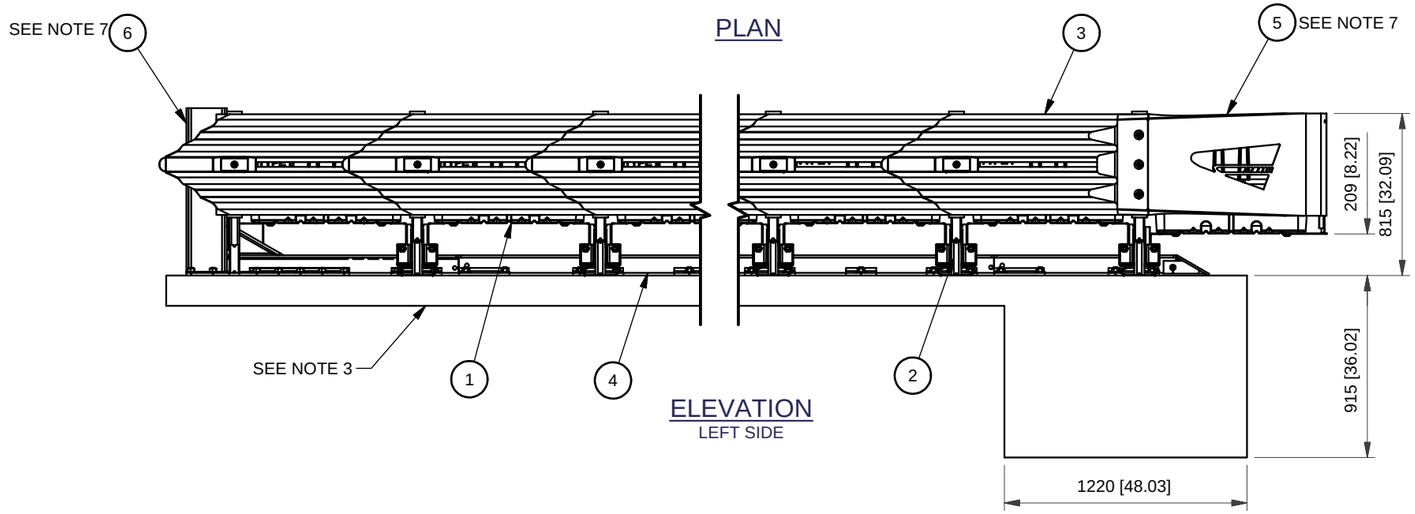

ELEVATION
LEFT SIDE

NOTES:

1. IN COMPLIANCE WITH THE AASHTO 2002 ROADSIDE DESIGN GUIDE, MANUFACTURER RECOMMENDS REMOVAL OF ALL CURBS AND ISLANDS TO ENSURE PROPER IMPACT PERFORMANCE.
2. PROVISION SHALL BE MADE FOR REAR FENDER PANELS TO SLIDE REARWARD UPON IMPACT 762 [30.00] MIN.
3. 150 [6.00] MIN. REINFORCED 28 MPa [4000 PSI] P.C. CONCRETE PAD OR 200 [8.00] MIN. NON-REINFORCED 28MPa [4000 PSI] P.C. CONCRETE ROADWAY, MEASURING AT LEAST 3.66 m [12'-0"] WIDE BY 15.24 m [50'-0"] LONG.
4. SEE THE "QUADGUARD II SYSTEM PRODUCT MANUAL" FOR A DESCRIPTION OF ITS IMPACT PERFORMANCE CHARACTERISTICS AND DESIGN LIMITATIONS BEFORE PLACING A SYSTEM AT A GIVEN SITE. INFORMATION AND COPIES OF ABOVE MANUAL ARE AVAILABLE BY CALLING CUSTOMER SERVICE DEPARTMENT AT (888) 323-6374.
5. WHERE NECESSARY, THE CUSTOMER SHALL SUPPLY AN ADEQUATE TRANSITION FROM THE QUADGUARD II SYSTEM TO THE OBJECT BEING SHIELDED.
6. UNITS OF MEASUREMENT ARE MILLIMETERS [INCHES] UNLESS OTHERWISE NOTED.
7. BACKUP, MONORAIL, AND NOSE ASSEMBLIES ARE NOT INCLUDED IN MODEL NUMBER, ORDER SEPARATELY.
8. THE QUADGUARD II SYSTEM HAS BEEN TESTED TO NCHRP 350.

BAYS	610 [24"] WIDTH MODEL NO.	762 [30"] WIDTH MODEL NO.	914 [36"] WIDTH MODEL NO.	1220 [48"] WIDTH MODEL NO.	SYSTEM LENGTH m	ft-in	EFFECTIVE LENGTH m	ft-in	PAD LENGTH m	ft-in	MAX DESIGN SPEED Km/h	[MPH]	NO. OF CARTRIDGES TYPE I	TYPE II
1	QG24024	QG24030	QG24036	QG24048	2.13	[7'-0"]	1.73	[5'-8"]	2.74	[9'-0"]	40	[25]	2	0
2	QG27024	QG27030	QG27036	QG27048	3.05	[10'-0"]	2.64	[8'-8"]	2.74	[9'-0"]	70	[43]	2	1
3	QG28024	QG28030	QG28036	QG28048	3.96	[13'-0"]	3.56	[11'-8"]	3.66	[12'-0"]	80	[50]	2	2
4	QG29024	QG29030	QG29036	QG29048	4.87	[16'-0"]	4.47	[14'-8"]	4.57	[15'-0"]	90	[56]	3	2
5	QG210024	QG210030	QG210036	QG210048	5.79	[19'-0"]	5.38	[17'-8"]	5.49	[18'-0"]	100	[62]	3	3
6	QG210524	QG210530	QG210536	QG210548	6.71	[22'-0"]	6.30	[20'-8"]	6.40	[21'-0"]	105	[65]	4	3
7	QG211024	QG211030	QG211036	QG211048	7.63	[25'-0"]	7.21	[23'-8"]	7.32	[24'-0"]	110	[68]	4	4
8	QG211524	QG211530	QG211536	QG211548	8.53	[28'-0"]	8.13	[26'-8"]	8.23	[27'-0"]	115	[71]	4	5
9	QG212024	QG212030	QG212036	QG212048	9.45	[31'-0"]	9.04	[29'-8"]	9.14	[30'-0"]	120	[75]	4	6

UNIDIRECTIONAL

KEY

1 CARTRIDGE
2 DIAPHRAGM
3 FENDER PANEL
4 MONORAIL
5 NOSE ASSEMBLY
6 BACKUP

Revision	Date	Rev	By	Chk.	App.
MONORAIL ASSY IN REFERENCES WAS 35-40-06, CONCRETE PAD WAS 35-40-11	6/22/09	B	DDS	STT	RCB
REVISED DESIGN SPEED COLUMN IN TABLE.	8/31/09	C	DK	JME	RCB
UPDATED SYSTEM LENGTH AND EFFECTIVE LENGTH COLUMNS IN TABLE	10/23/09	D	DDS	JME	FJP

REFERENCES

	DIAPHRAGM ASSY.	607113
SERIAL NO.	SHIM KIT, DIAPHRAGM	614050
	NOSE ASSY.	611580
SALES ORDER	FENDER PANEL ASSY.	608236
EH PROJECT	BACKUP ASSY.	35-40-03
	MONORAIL ASSY.	35-40-75
NO. OF UNITS	CONCRETE PAD	35-40-76

DRAWN: D. Kohfeld	DATE: 2/25/2009
DESIGNED: M. Buehler	DATE: 12/30/2008
CHECKED: JME	DATE: 3/4/2009
APPROVED: MJB	DATE: 3/19/2009
FILE: QG2TSCVR-U.idw	
NEXT ASSEMBLY:	

ENERGY ABSORPTION SYSTEMS, INC.
ENGINEERING AND RESEARCH DEPARTMENT

QUADGUARD® II SYSTEM
WITH TENSION STRUT BACKUP

SCALE:	DRAWING:	SHEET:	REV
	QG2TSCVR-U	1 of 1	D

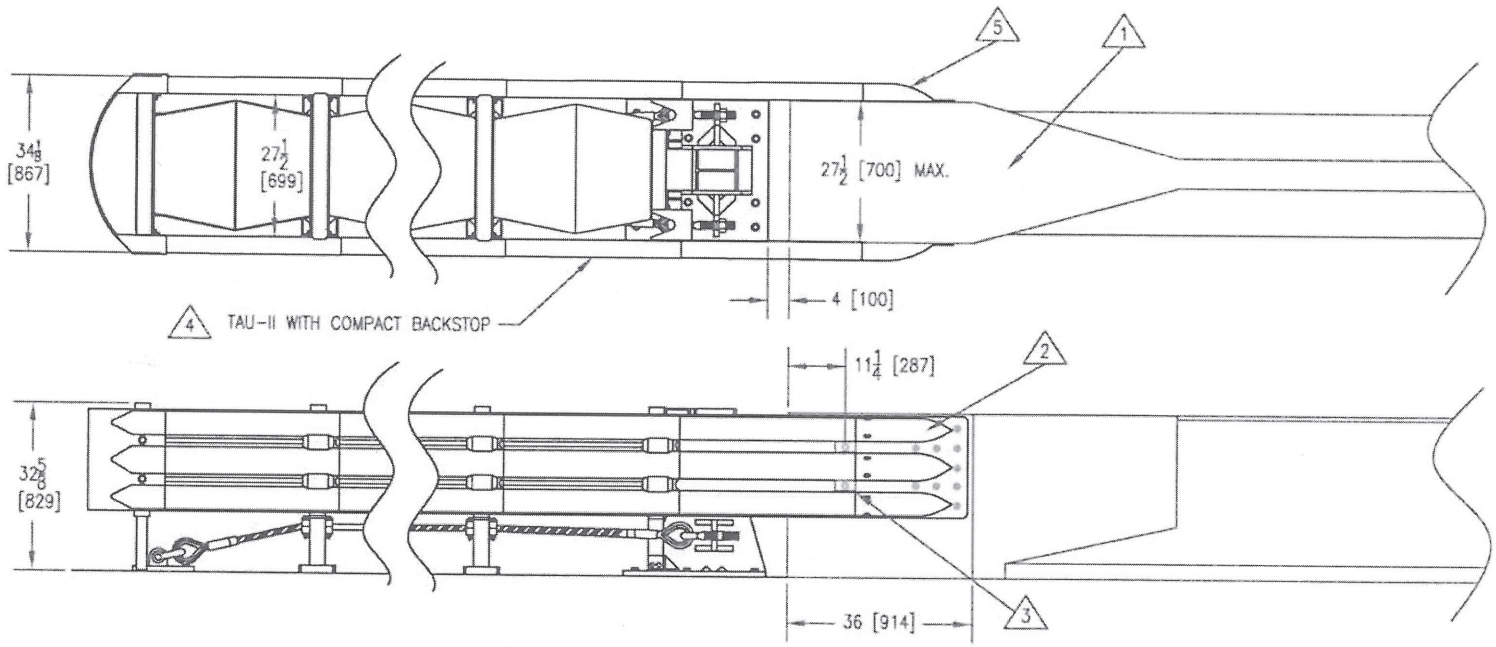

NOTES:

1.) REINFORCEMENT OF VERTICAL CONCRETE END SHOE MAY BE NEEDED. REFER TO BSI SPECIFICATION B010714 OR B010819 FOR FOUNDATION REQUIREMENTS.

2.) THRIE BEAM BRIDGE SHOE PER AASHTO HARDWARE SPECIFICATION RTE01b.

3.) RECTANGULAR GUARDRAIL WASHER PER AASHTO HARDWARE SPECIFICATION FWR03.

4.) TAU-II SYSTEM TO BE INSTALLED PER MANUFACTURER INSTRUCTIONS.

5.) END PANEL MUST OVERLAP BRIDGE SHOE TO INSURE PROPER FUNCTION OF TAU-II SYSTEM.

NOTE:
THICKNESS OF WELD TO BE EQUAL TO THE THINNER OF 2 PIECES BEING JOINED. WELD TO BE ALL AROUND UNLESS OTHERWISE NOTED.

© 2001 Barrier Systems, Inc.
The information herein is proprietary to Barrier Systems Inc. and shall not be disclosed, duplicated or used otherwise without the express written approval of Barrier Systems Inc.

REV.	CHANGES	DATE	BY	REQ'D	NEXT ASSY.	ITEM
B	SEE ECN 00368	4/26/02	GIO			
A	RELEASE PREP.	11/19/01	GIO	NA	NA	NA

SCALE: 1=20

	DATE	INIT.
DRAWN BY	07/02/01	JOC
APP'D BY	11/20/01	JSU

Standard Tolerance
Angular ± 1/2°
Fractional ± 1/16
Dec .XX= ± .010
Dec .XX= ± .030

TITLE: TAU-II WITH COMPACT BACKSTOP, TRANSITION TO CONCRETE END SHOE

MODEL	DRAWING NUMBER	REV.
	B010806	B

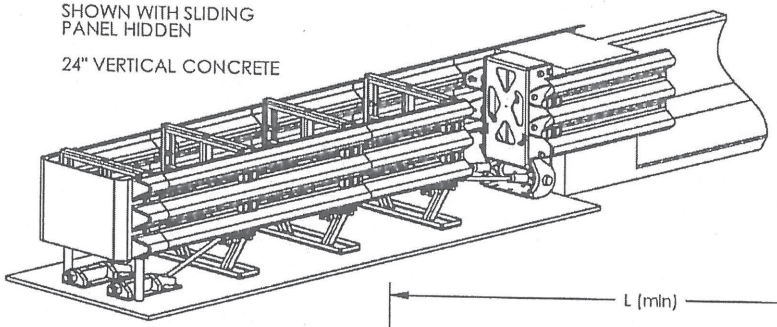

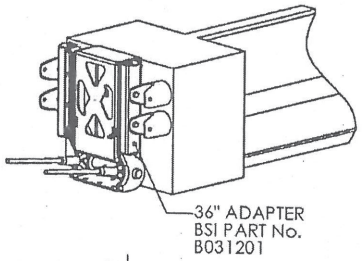

NOTES:
1.) FLUSH MOUNT BACKSTOP SYSTEMS ARE INTENDED FOR APPLICATIONS WHERE THE HAZARD WIDTH EXCEEDS THE LIMITATIONS OF THE PCB BACKSTOP. FLUSH MOUNT SYSTEMS ARE ALSO APPLICABLE IN LOCATIONS WITH LIMITED FOUNDATION SIZE.
2.) THE FLUSH MOUNT BACKSTOP MAY BE ATTACHED TO REINFORCED SAFETY SHAPE OR VERTICAL CONCRETE STRUCTURES UP TO 36" [914] WIDE. STRUCTURES OVER 24"[610] WIDE REQUIRE 36" ADAPTER B031201. EDGES OF VERTICLE CONCRETE MAY REQUIRE CHAMFER ACCORDING TO LOCAL STANDARDS.
3.) VERTICAL SLOTS ON THE BACKSTOP ALLOW REMOVAL/ REPLACEMENT OF THE BACKSTOP. ANCHORS MUST BE PLACED AT THE TOP OF SAID SLOTS TO BE EFFECTIVE.
4.) FLUSH MOUNT BACKSTOP SYSTEMS USE THE SAME CABLE USED IN ALL PARALLEL SYSTEMS. THE CABLE IS INSTALLED WITH THE THREADED TENSIONING END FORWARD. THE LOOPED END IS PINNED IN PLACE AT THE BACKSTOP.
5.) THE FRONT CABLE ANCHOR USES AN INSERTED KEY TO KEEP THE THREADED STUD FROM ROTATING DURING TENSIONING.
6.) ANCHOR ACCORDING TO BSI SPECIFICATIONS. REFERENCE BSI DRAWING A040113.

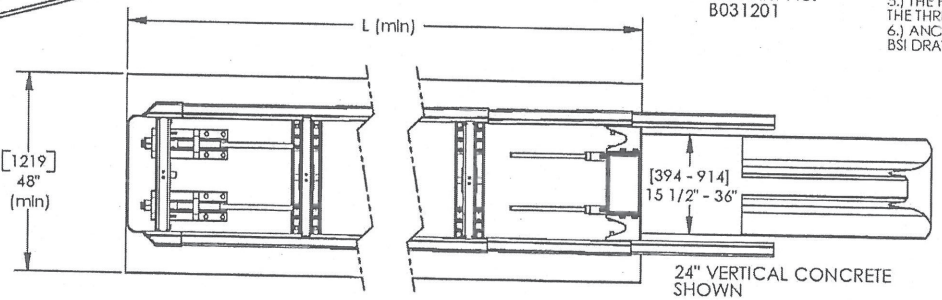

FOUNDATION PAD LENGTH DIMENSION "L" (MINIMUM)

BAY No.	CAPACITY (kph)	L (ft-in)	L (mm)
2	50	6' - 11 1/2"	2121
3	60	9' - 9 1/2"	2986
4	70	12' - 7 1/2"	3848
5	80	15' - 5 1/2"	4712
6	85	18' - 4"	5588
7	90	21' - 2"	6452
8	100	24' - 0"	7315
9	105	26' - 10"	8179
10	110	29' - 8 1/2"	9055
11	115	32' - 6 1/2"	9919
12	120	35' - 4 1/2"	10782

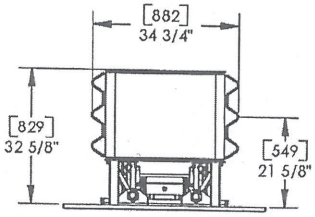

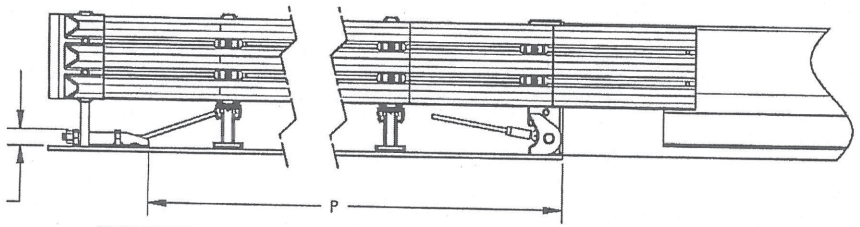

FRONT ANCHOR PLACEMENT DIMENSION "P"

BAY No.	CAPACITY (kph)	P (ft-in)	P (mm)
2	50	4' - 11 1/2"	1511
3	60	7' - 9 1/2"	2375
4	70	10' - 7 1/2"	3239
5	80	13' - 5 1/2"	4102
6	85	16' - 4"	4978
7	90	19' - 2"	5842
8	100	22' - 0"	6706
9	105	24' - 10"	7569
10	110	27' - 8 1/2"	8446
11	115	30' - 6 1/2"	9309
12	120	33' - 4 1/2"	10173

NOTE:
THICKNESS OF WELD TO BE EQUAL TO THE THINNER OF 2 PIECES BEING JOINED. WELD TO BE ALL AROUND UNLESS OTHERWISE SPECIFIED

© 2004 Barrier Systems Inc
The information herein is proprietary to Barrier Systems Inc. shall not be disclosed, duplicated or used otherwise without the express written approval of Barrier Systems Inc.

REV.	CHANGES	DATE	BY	REQ'D	NEXT ASSY	ITEM
				1	TBD	1

SCALE: 1:24

	DATE	INT.
DRAWN BY	4/21/04	GAD
		GAD

Standard Tolerances
Angular +/- 1/2 Deg.
Fractional +/- 1/16
Dec. .XXX= +/- .010
Dec. .XX= +/- .030

TITLE: APPLICATION, FLUSH MOUNT BACKSTOP

MODEL	DRAWING NUMBER	REV
	B040239	

Figure 3

APPENDIX A—SCI ATTENUATOR PARTS LIST

SCI CRASH CUSHION PARTS LIST

Part No.	Description	Qty Per Unit TL2/TL3	Unit of Measure	Spare Parts Kit TL2/TL3
9400	Attenuator 24″ wide w/Concrete Anchors TL3			
9450	Attenuator 24″ Wide w/Asphalt Anchors TL3			
9451	Attenuator 24″ wide w/Concrete Anchors TL2			
9452	Attenuator 24″ wide w/Asphalt Anchors TL2			
9401	Bolt Concrete Anchor 3/4″ x 7″ TL3 *(included in P/N 9400)	*	KIT/48 pcs.	
9402	Bolt Asphalt Anchor 3/4″ x 18″ TL3 *(included in P/N 9450)	*	KIT/48 pcs.	
9453	Bolt Concrete Anchor 3/4″ x 7″ TL2 **(included in P/N 9451)	**	KIT/34 pcs.	
9454	Bolt Asphalt Anchor 3/4″ x 18″ TL2 **(included in P/N 9452)	**	KIT/34 pcs.	
9403	Bolt Cable Adjuster	1	EACH	
9404	Bolt Sled Side Panel	8	EACH	
9405	Bolt Front Stop	2	EACH	
9406	Bolt Shear	2	EACH	**10/10**
9407	Bolt Side Guide	12	EACH	
9408	Bolt Terminal Brace	4	EACH	
9409	Brace Terminal	1	EACH	
9410	Cable 1 1/8″ with Spelter Socket TL3	1	EACH	
9455	Cable 1 1/8″ with Spelter Socket TL2	1	EACH	
9411	Clip Wire Rope TL2 & TL3	4	EACH	
9412	Cylinder Shock Arresting TL3	1	EACH	
9445	Cylinder Shock Arresting TL2	1	EACH	
9413	Strap Cylinder TL3	1	EACH	
9448	Strap Cylinder TL2	1	EACH	
9414	Frame Mobile #1 TL3	0/1	EACH	
9415	Frame Mobile #2 TL3	0/1	EACH	
9416	Frame Mobile #3 TL3	0/1	EACH	
9417	Frame Mobile #4 TL2 & TL3	1	EACH	
9418	Frame Mobile #5 TL2 & TL3	1	EACH	
9419	Frame Mobile #6 TL2 & TL3	1	EACH	
9420	Guide Side TL2 & TL3	6/12	EACH	
9421	Keeper Side #3 (Sled Panels) TL2 & TL3	4	Each	**4/4**
9422	Keeper Side #1 (Side Panels) TL2 & TL3	8/20	EACH	**6/6**
9423	Keeper Side #2 (Rear Panels) TL2 & TL3	4	EACH	**2/2**
9424	Panel Delineator (Painted Yellow) TL3	0/1	EACH	**0/1**
9496	Panel Delineator (Painted Black) TL3		EACH	
9497	Panel Delineator Diamond Grade Chevron 6″ stripes TL3		EACH	

SCI CRASH CUSHION PARTS LIST				
Part No.	**Description**	**Qty Per Unit TL2/TL3**	**Unit of Measure**	**Spare Parts Kit TL2/TL3**
9498	Panel Delineator Diamond Grade Left 6” stripes TL3		EACH	
9499	Panel Delineator Diamond Grade Right 6” stripes TL3		EACH	
9456	Panel Delineator (Painted Yellow) TL2	1/0	EACH	**1/0**
9506	Panel Delineator (Painted Black) TL2		EACH	
9501	Panel Delineator Diamond Grade Chevron 6” stripes TL2		EACH	
9502	Panel Delineator Diamond Grade Left 6” stripes TL2		EACH	
9503	Panel Delineator Diamond Grade Right 6” stripes TL2		EACH	
9425	Panel Side TL2 & TL3	4/10	Each	**3/3**
9426	Panel Sled	2	EACH	**2/2**
9427	Panel Rear	2	EACH	**1/1**
9428	Sheave (pulley)	6	EACH	
9429	Sled (with guide rollers)24” TL3	0/1	EACH	
9457	Sled (with guide rollers) 24” TL2	1/0	EACH	
9439	Epoxy 28 oz. Cartridge and Nozzle ***	***	EACH	
9515	Epoxy Kit for TL3 Concrete Attenuator		EACH	
9516	Epoxy Kit for TL3 Asphalt Attenuator		EACH	
9517	Epoxy Kit for TL2 Concrete Attenuator		EACH	
9518	Epoxy Kit for TL2 Asphalt Attenuator		EACH	
9440	Nozzle Epoxy Mixing ***	***	EACH	
9441	Dispenser Epoxy	0	EACH	
9443	Boot Cylinder TL3	1	EACH	
9449	Boot Cylinder TL2	0	EACH	
9444	Spare Parts Kit TL3	0	EACH	
9458	Spare Parts Kit TL2	0	EACH	
9488	Reset Parts Kit TL3	0	EACH	
9489	Reset Parts Kit TL2	0	EACH	
9495	Tool Anti-Rotation Pin Removal	0	EACH	
9507	Anchor Drop-In	0	EACH	
9508	Pin Anti-Rotation Front	0	EACH	
9509	Pin Anti-Rotation Rear	0	EACH	
9510	Plate Sheave Cover	0	EACH	
9525	Cable Release Tool	0	EACH	

TRANSITIONS AND TRANSITION PARTS			
9431	Transition Jersey Barrier - Right	O	EACH
9432	Transition Jersey Barrier - Left	O	EACH
9433	Transition 24″ Concrete - Left & Right	O	EACH
9437	Transition Thrie Beam - Right	O	EACH
9438	Transition Thrie Beam—Left	O	EACH
9511	Transition W Beam 28″ High Right	O	EACH
9512	Transition W Beam 28″ High Left	O	EACH
9513	Transition W Beam 32″ High Right	O	EACH
9514	Transition W Beam 32″ High Left	O	EACH
9459	Transition Assembly 30″ Concrete Straight Connection	O	EACH
9460	Transition Assembly 36″ Concrete Straight Connection	O	EACH
9461	Transition Assembly 30″ Concrete Outside Connection	O	EACH
9462	Transition Assembly 36″ Concrete Outside Connection	O	EACH
9475	Transition Assembly Gore to End of Flared Transition	O	EACH
9476	Transition Assembly Median Barrier 36B X 19T X 42H	O	EACH
9492	Transition Assembly Median Barrier 36B X 19T X 32H	O	EACH
9463	Transition 30″ Concrete Straight Connection	O	EACH
9464	Transition 36″ Concrete Straight Connection	O	EACH
9465	Transition 30″ Concrete Outside Connection	O	EACH
9466	Transition 36″ Concrete Outside Connection	O	EACH
9467	Transition Thrie Beam 10 Degree Flare - Right	O	EACH
9468	Transition Thrie Beam 10 Degree Flare - Left	O	EACH
9469	Transition Concrete Spanner Brace	O	EACH
9470	Transition Concrete #1 Tapered Spanner Brace	O	EACH
9471	Transition Concrete #2 Tapered Spanner Brace	O	EACH
9472	Transition Gore Tapered #1 Spanner Brace	O	EACH
9473	Transition Gore Tapered #2 Spanner Brace	O	EACH
9474	Thrie Beam Concrete Leg Brace	O	EACH
9477	Transition Median Barrier 36B X 19T X 42H Right	O	EACH
9478	Transition Median Barrier 36B X 19T X 42H - Left	O	EACH
9493	Transition Median Barrier 36B X 19T X 32H - Right	O	EACH
9494	Transition Median Barrier 36B X 19T X 32H - Left	O	EACH
9479	Transition Spanner Brace Median Barrier 36B	O	EACH
9480	Transition Rub Rail Median Barrier - Right	O	EACH
9481	Transition Rub Rail Median Barrier - Left	O	EACH
9490	Transition Single Slope 24-26 9/32″ Wide Median Barrier - Right	O	EACH
9491	Transition Single Slope 24-26 9/32″ Wide Median Barrier - Left	O	EACH
9504	Transition Profile B Right	O	EACH
9405	Transition Profile B Left	O	EACH
9524	Blockout	O	EACH

O = Optional

APPENDIX B—EQUIPMENT LIST

The following tools and equipment will be required to install and repair the Crash Cushion:

- Standard roadside work area safety equipment
- Personal safety equipment (gloves, latex gloves for epoxy, eye/face protection, etc.)
- Means of safely unloading 3500 lb
- Compressed air source/Vacuum
- 1″ bottle brush (McMaster Carr # 73075T55)
- Safety goggles
- Four lifting slings or four-point sling
- Bosch rotary hammer drill 13 ½ amp #11263EVS Model 0 611 263 739 or equal
- ⅞″ X 22″ concrete drill bit for concrete installations or ⅞″ X 28″ drill bit for asphalt installations
- Renton rebar eater bit #RB-14 - ⅞″ rebar cutter bit or equal
- 1″ X 12″ concrete drill bit for drop-in anchors on transitions
- Punch or setting tool for drop-in anchors.
- ½″ electric drill for rebar bit and bottle brush (cordless will work for bottle brush)
- Epoxy dispenser for 28 oz dual cartridge system (should have spare in case of malfunction)
- Combination wrenches, deep sockets (Including 7/16″ – ⅝″, 1 ¼″, 1 ½″, 1 ⅝″) and 3+″ extension
- Socket wrench and breaker bar
- Torque wrench (225 ft-lb capacity) with 3 ft extension
- Measuring and layout equipment (tape measure, chalk line, markers, etc.)
- 5 ft wedge and round-ended pry bar
- Loctite #34395 marine grade anti-seize
- Suitable pulling means (strap or chain)
- 2 long-handled flat screwdrivers
- Misc. small tools (hammers, pliers, screw drivers, vise grips, etc.)
- Bear claw pry bar to remove ¼″ shear bolt remnants

This list is adequate for general installation and repair. However, depending on site conditions, additional tools and equipment may be required.

APPENDIX D - SMART CUSHION ®, TEST LEVEL 3

PARTS LIST

01 - Front Sled
02 - Cable Assembly
05 - Sled Panel
07 - Terminal Brace
09 - Anchor Bolts
12 - Side Panels
14 - Mobile Sheave Assembly
17 - Cable Adjuster Bolt
18-23 - Mobile Frames 1-6
26 - Cylinder
27 - Rear Panel
06, 08, 29 - Side Keepers

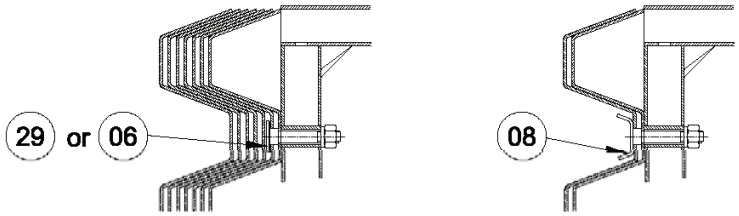

DETAIL A

DETAIL B

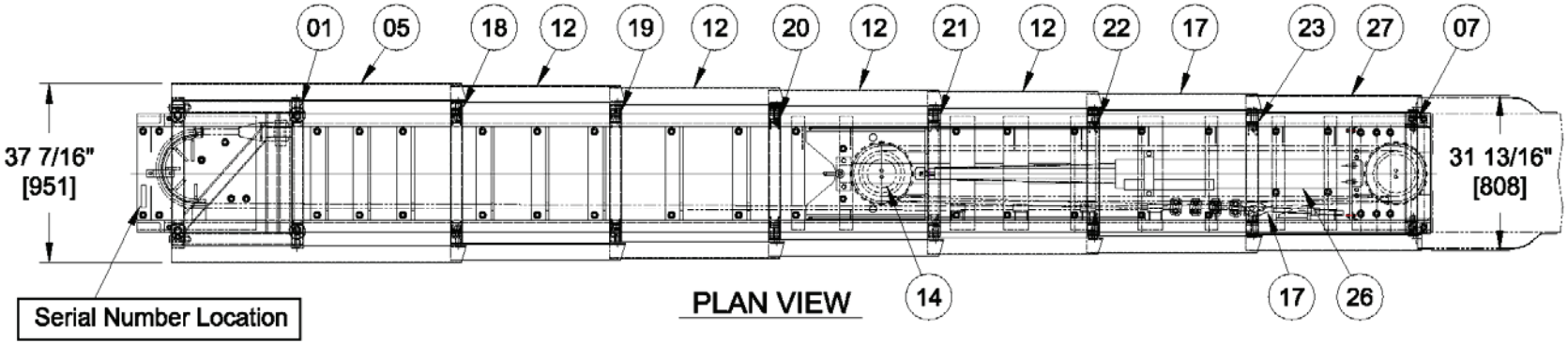

PLAN VIEW

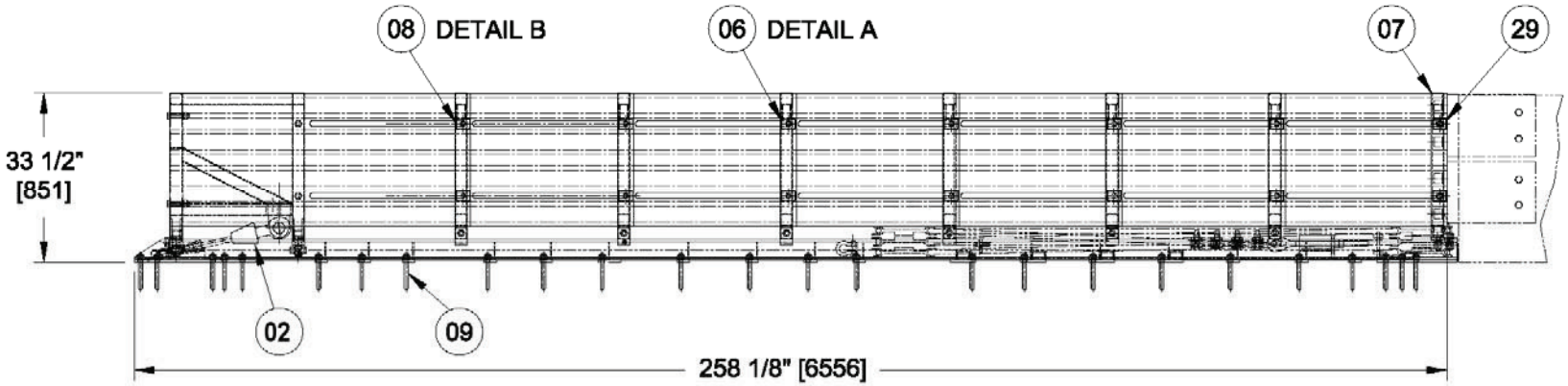

SIDE VIEW

APPENDIX E2 - TEST LEVEL 3 FOUNDATION

Cross Slope at Top Surface not to Exceed 1 in 10
Foundation must be a Level Plane

* * * * * Wide Hazards and Transitions may require the foundation to be longer. See Transition Drawings.

SPECIFICATIONS

All reinforcing steel - straight #4 ASTM-A36

Embedment requirements:

- 6" reinforced concrete pad with anchor embedment of 5 1/2"
- 8" non-reinforced concrete pad with anchor embedment of 5 1/2"
- 3" asphalt over 3" concrete with anchor embedment of 16 1/2"
- 6" asphalt over 6" of compacted subbase with anchor embedment of 16 1/2"
- 8" asphalt with anchor embedment of 16 1/2"

The contractor shall furnish a certification for material installed to the following requirements:

- 6" reinforced concrete (PCC) sampling per ASTM C31-84, testing per ASTM C39-84
- 8" non-reinforced concrete (PCC) sampling per ASTM C31-84, testing per ASTM 39-84
- 3" asphalt over 3" concrete - Type SP 12.5 Level C or higher
- 6" asphalt over 6" of compacted subbase - same as above
- 8" asphalt (AC) - Type SP 12.5 Traffic Level C or higher

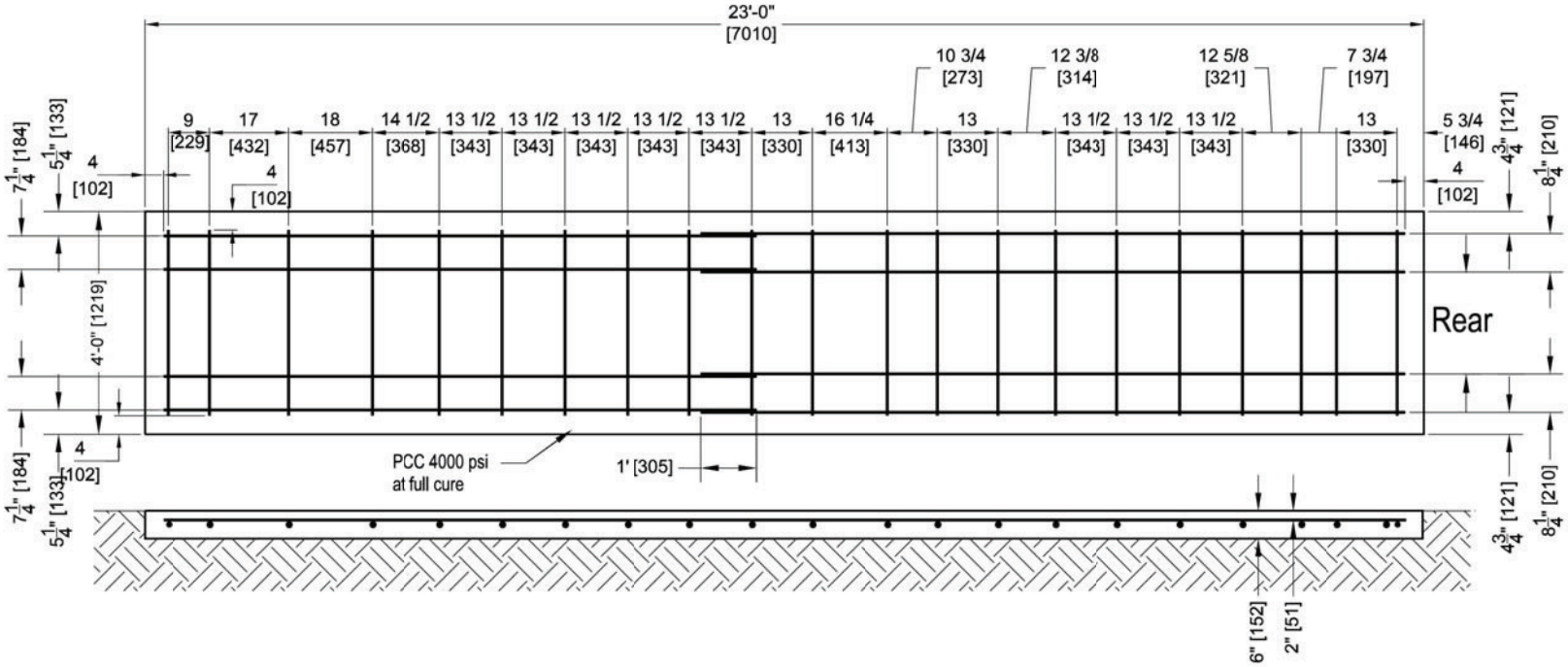

SCI100GM
Level 3 System

APPENDIX H - TRANSITION, CONCRETE BLOCK, 24 INCH (610mm)

PARTS LIST

Transition 24" Concrete Block Right or Left #9433

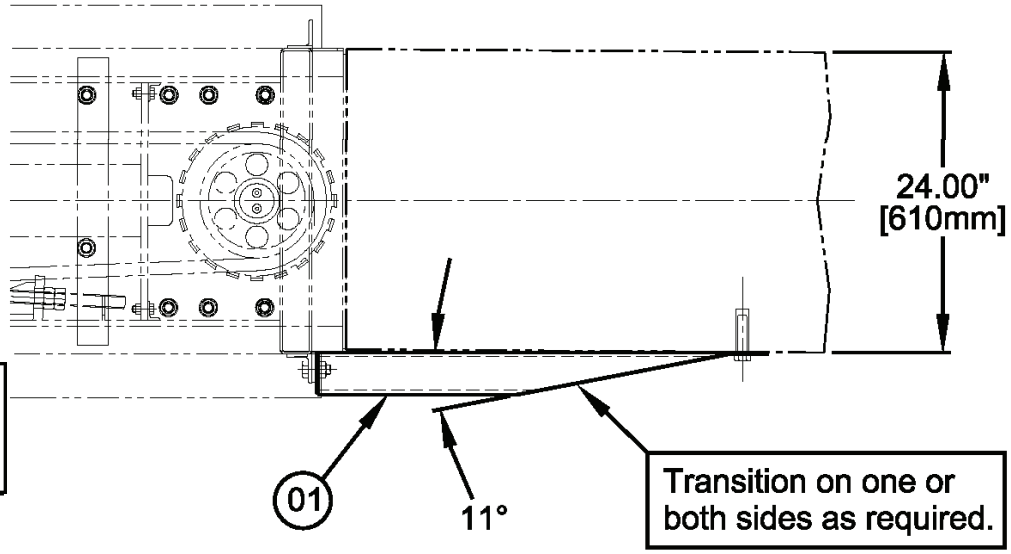

PLAN VIEW

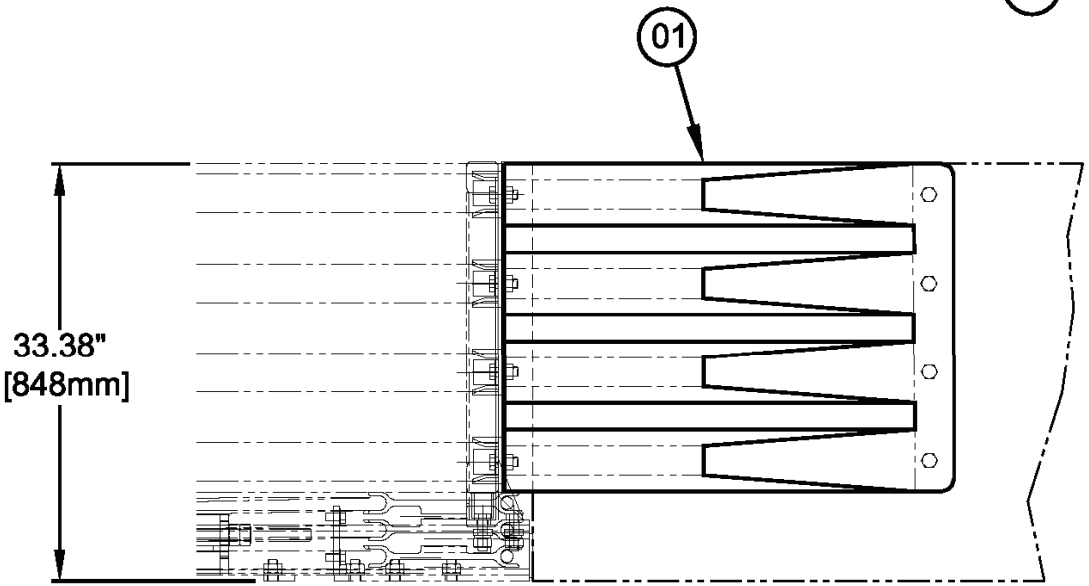

SIDE VIEW

APPENDIX H(2) - TRANSITION, CONCRETE BLOCK, 24 INCH (610mm)

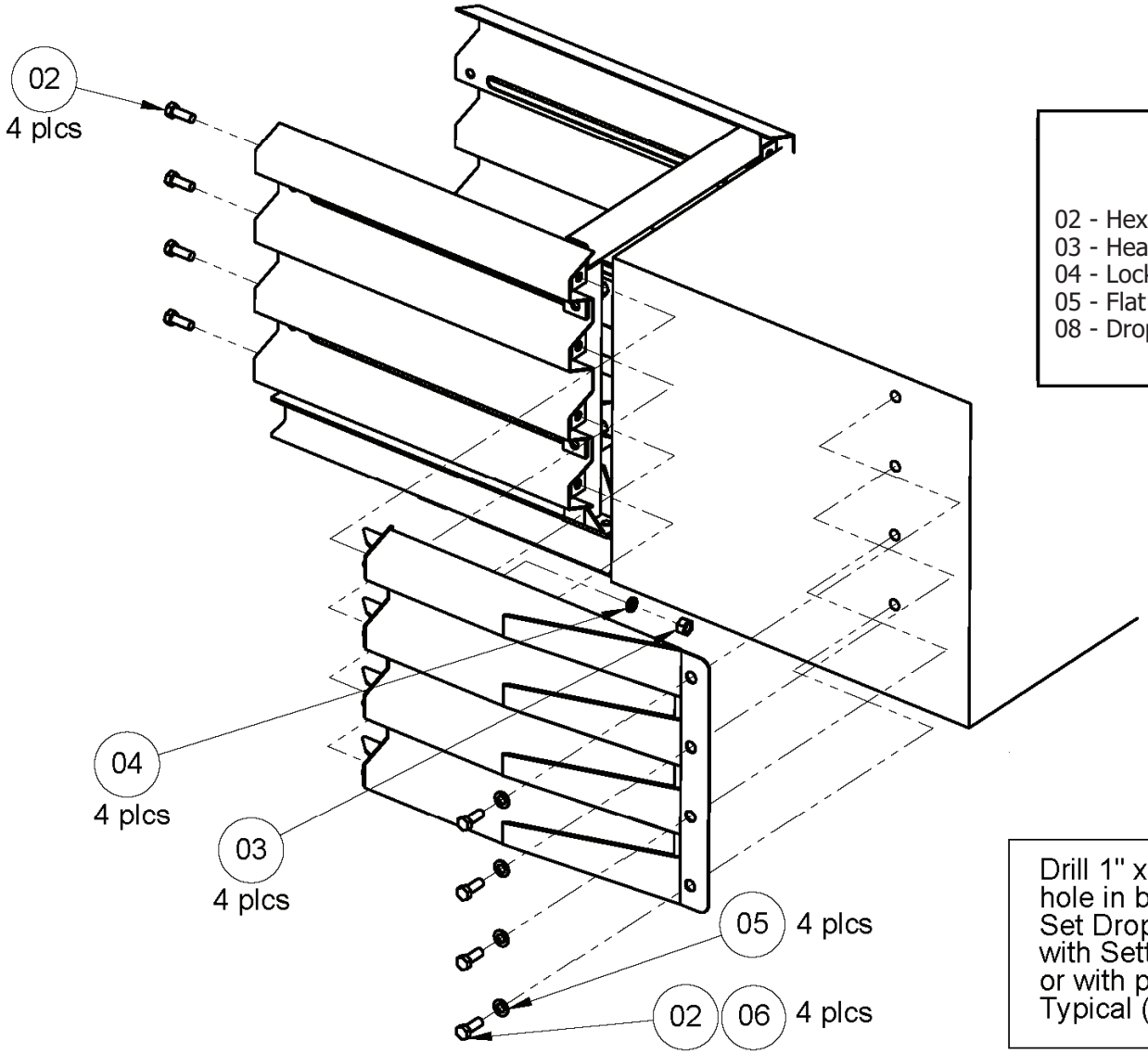

PARTS LIST

02 - Hex Bolt 3/4"-10NC x 2"
03 - Heavy Hex Nut 3/4"-10NC
04 - Lock Washer 3/4"
05 - Flat Washer 3/4"
08 - Drop-In Anchor 3/4"-10NC x 3"

Drill 1" x 3 1/4" deep hole in barrier.
Set Drop-In Anchor with Setting Tool or with punch.
Typical (4) places.