Dist	COUNTY	ROUTE	POST MILES TOTAL PROJECT	SHEET No.	TOTAL SHEETS
05	Mon	101	61.0/64.6, 66.8/69.4	37	114

REGISTERED CIVIL ENGINEER — DATE 10-15-12

PLANS APPROVAL DATE 10-29-12

REGISTERED PROFESSIONAL ENGINEER JAMES ESPINOSA No. 54100 Exp. 12-31-13 CIVIL STATE OF CALIFORNIA

THE STATE OF CALIFORNIA OR ITS OFFICERS OR AGENTS SHALL NOT BE RESPONSIBLE FOR THE ACCURACY OR COMPLETENESS OF SCANNED COPIES OF THIS PLAN SHEET.

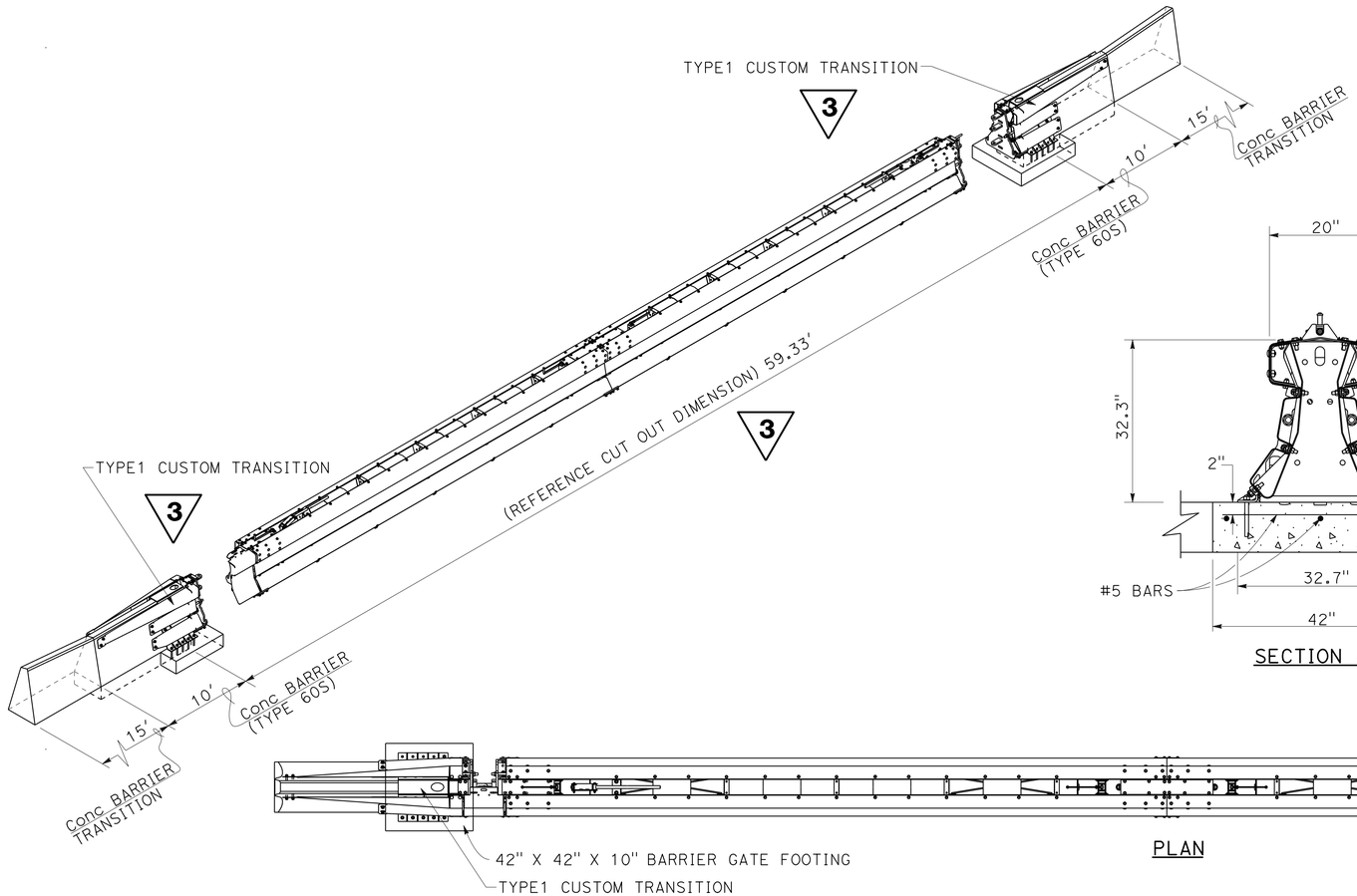

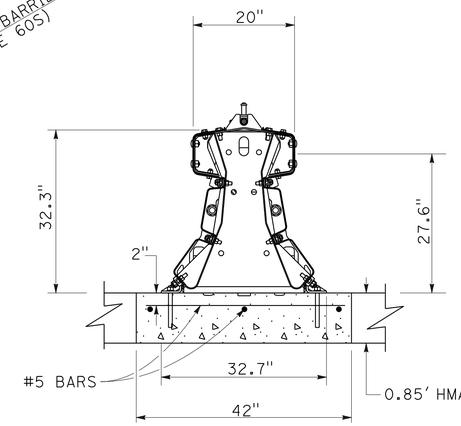

SECTION A-A

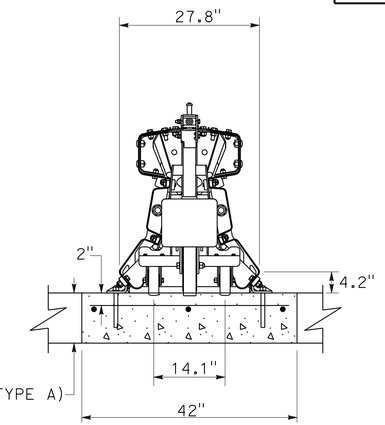

SECTION B-B

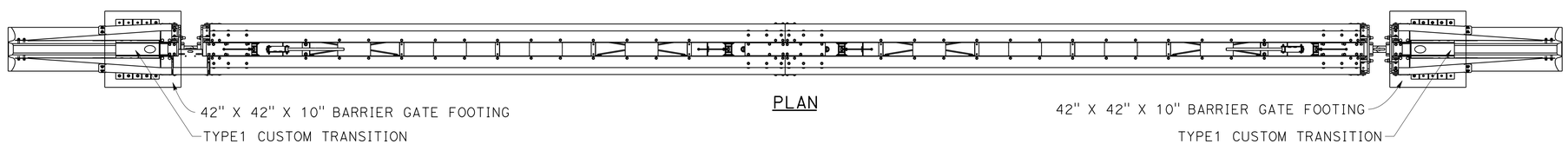

PLAN

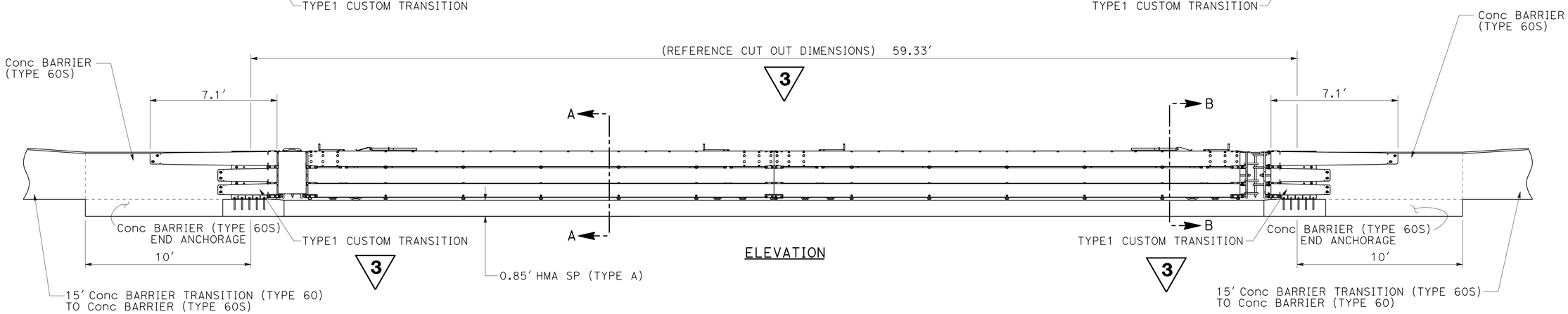

ELEVATION

BARRIER GATE SYSTEM

(ARMORGUARD GATE)

3 REVISED PER ADDENDUM No. 3 DATED FEBRUARY 8, 2013

2 REVISED PER ADDENDUM No. 2 DATED FEBRUARY 5, 2013

CONSTRUCTION DETAILS C-4

NO SCALE

STATE OF CALIFORNIA - DEPARTMENT OF TRANSPORTATION

Caltrans 06-DESIGN

FUNCTIONAL SUPERVISOR JAMES ESPINOSA

CALCULATED-DESIGNED BY SAL JARAMILLO

CHECKED BY ATIF ABDALLA

REVISED BY

DATE REVISED

LAST REVISION 02-07-13 DATE PLOTTED => 07-FEB-2013 TIME PLOTTED => 17:10