FOR CONTRACT NO.: 05-0P9704

INFORMATION HANDOUT

MATERIALS INFORMATION

ALTERNATIVE CRASH CUSHION (TAU-II, TRINITY INDUSTRIES, INC)
BRAKEMASTER 350 SYSTEM (ENERGY ABSORPTION SYSTEMS, INC)

ROUTE: 05-Mon-68-R 3.9/10.8 (PM)

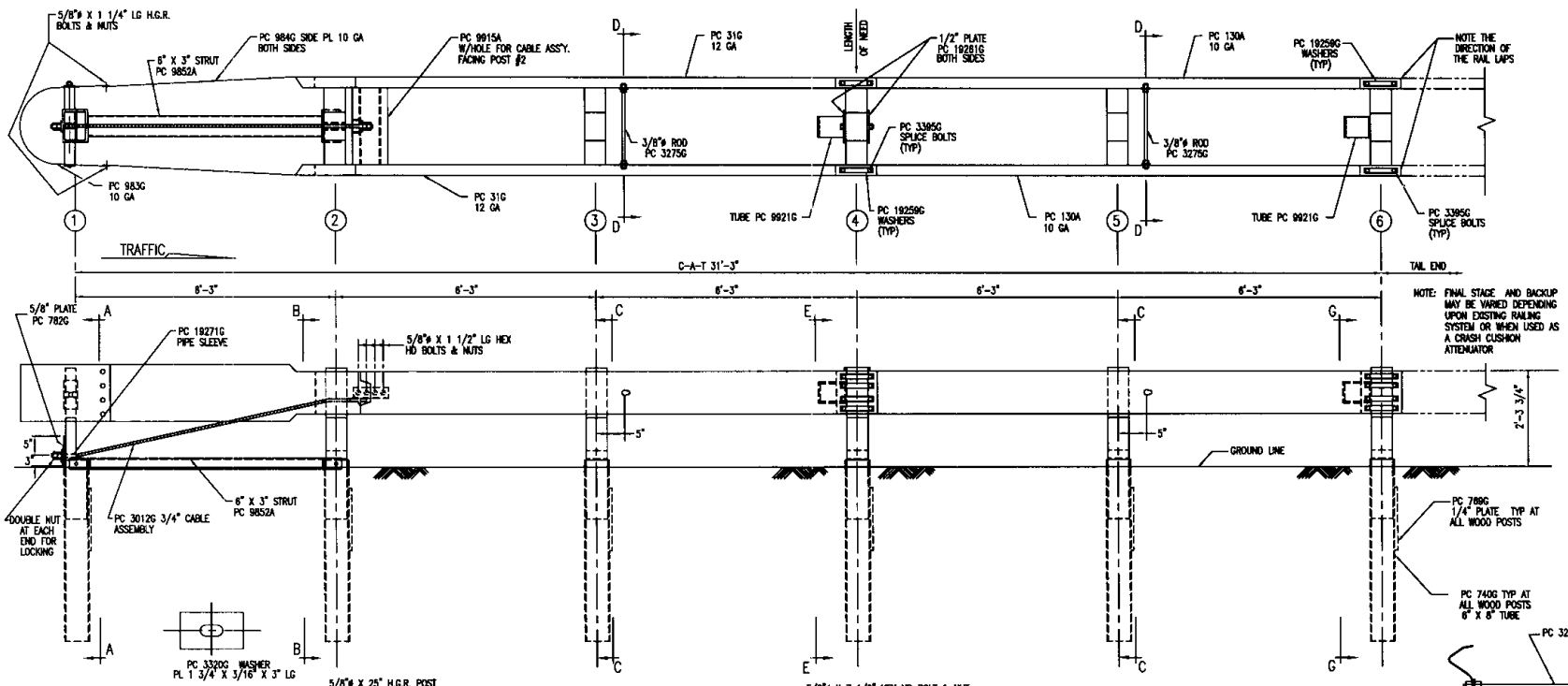

C-A-T BILL OF MATERIAL

PRODUCT CODE	QTY	DESCRIPTION
31G	2	12/12'6/0 CAT (GUARDRAIL)
130A	2	10/12'6/5'10ø8/SP CAT (GUARDRAIL)
705G	1	2" x 5 1/2" PIPE
740G	6	4'6 TUBE SLEEVE
769G	6	1/4 x 18 x 24 SOIL PLATE
782G	1	5/8" x 8" x 8" BEARING PLATE
983G	1	10/NOSE PLATE/CAT/ROLLED
984G	2	10/SIDE PLATE CAT
3012G	1	CABLE 3/4 x 8'0/DBL SWG
3074B	5	WD 3'6 POST #2, 3, 4, 5, 6 CAT
3075B	1	WD 3'6 POST #1 CAT
3100B	2	WD BLOCK 1'2 #1 CAT
3101B	10	WD BLOCK 1'2 #2-6 CAT
3255G	4	3/8" FLAT WASHER
3263G	4	3/8"ø x 2" LAG SCREW
3275G	2	3/8"ø x 24 1/2" RESTRAINT ROD
3300G	20	5/8" FLAT WASHER
3320G	4	3/16" x 1 3/4" x 3" RECT WASHER
3340G	85	5/8" G.R. NUT
3360G	16	5/8"ø x 1 1/4" G.R. BOLT
3380G	8	5/8"ø x 1 1/2" HEX BOLT
3385G	32	5/8"ø x 1 3/4" HEX BOLT CAT
3478G	13	5/8"ø x 7 1/2" HEX BOLT
3497G	6	5/8"ø x 9 1/2" HEX BOLT
3650G	2	5/8"ø x 25" G.R. BOLT
3900G	2	1" FLAT WASHER
3910G	4	1" HEX NUT
4252G	8	3/8" HEX NUT
4258G	4	3/8" LOCK WASHER
4640G	8	5/8"ø x 24" HEX BOLT
9852A	1	CHANNEL STRUT x 6'-6"
9915A	1	SPACER CHANNEL CAT
9916A	1	10/BENT PLATE SLEEVE
9921G	2	6" SLEEVE 6 x 8
19259G	32	3/16" x 2" x 10" PLATE WASHER
19261G	2	1/2 x 3 x 7 POST PLATE
19271G	1	1" x 2 1/2" PIPE SLEEVE CAT

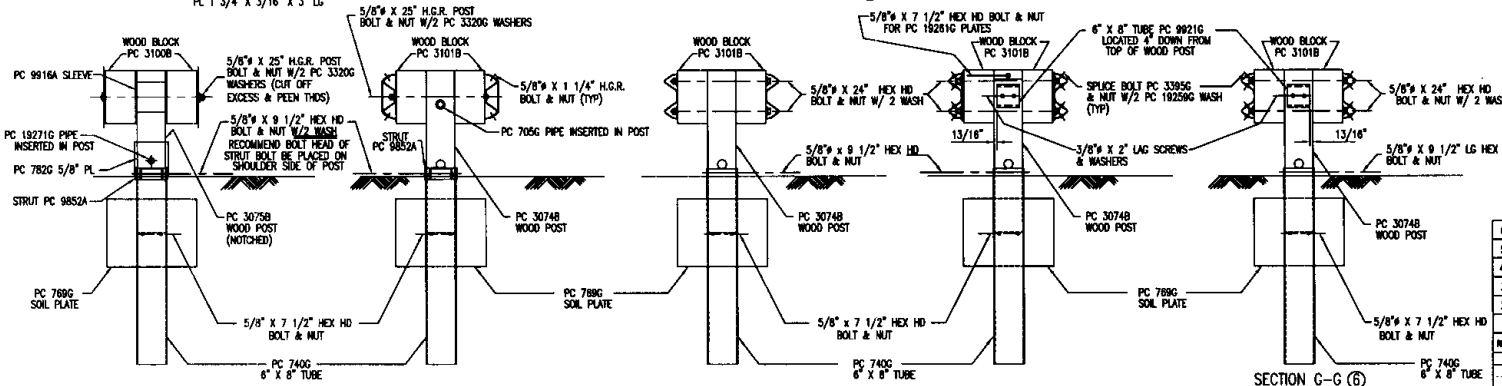

SECTION A-A ①

SECTION B-B ②

SECTION C-C ③&⑤

SECTION E-E ④

SECTION G-G ⑥

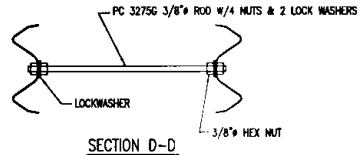

SECTION D-D

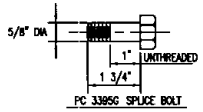

PC 3395G SPLICE BOLT

NOTE: PC 3395G SPLICE BOLTS ARE USED TO ALLOW TELESCOPING ACTION.

REV.	CHK'D	BY	DATE	REMARKS
6		BT	8-9-00	CHANGED SYSTEM HEIGHT, WAS 2'-3"
5		LH	6-22-00	REPLACED PC 786 WITH PC 789, CHANGED TITLE BLOCK
4		BT	4-10-97	ROTATED BLOCK PC 9921 90' AT POST 4 & 6
3		BT	3-10-97	DELETED PC 3072, 3073, 4470, CHG QTY 3074 & 3478
2		BT	8-12-96	SECTIONS A-A & B-B, CORRECTED PIPE SLEEVE PC No
1		BT	5-1-96	REVISED PC No 31G & 130A

C-A-T

CRASH-CUSHION ATTENUATING TERMINAL PLAN, ELEVATION & SECTIONS FOR USE AS A LONGITUDINAL MEDIAN BARRIER TERMINAL OR CRASH CUSHION ATTENUATOR

TRINITY INDUSTRIES, INC.
HIGHWAY SAFETY PRODUCTS
2525 STEMMONS FREEWAY, DALLAS, TX 75207

DRAWN	BT
CHECKED	EN
SCALE	N.T.S.
DATE	7-15-94
ENG. FILE #	SS245-01E
SHT./No.	E1 OF 1
DRAWING NO.	SS-245
REV.	6

This drawing and the information shown thereon is the sole property of TRINITY INDUSTRIES, INC. Neither the drawing nor such information is to be used for any purpose other than that for which it was specifically furnished by TRINITY INDUSTRIES, INC., nor is any reproduction authorized without written permission.

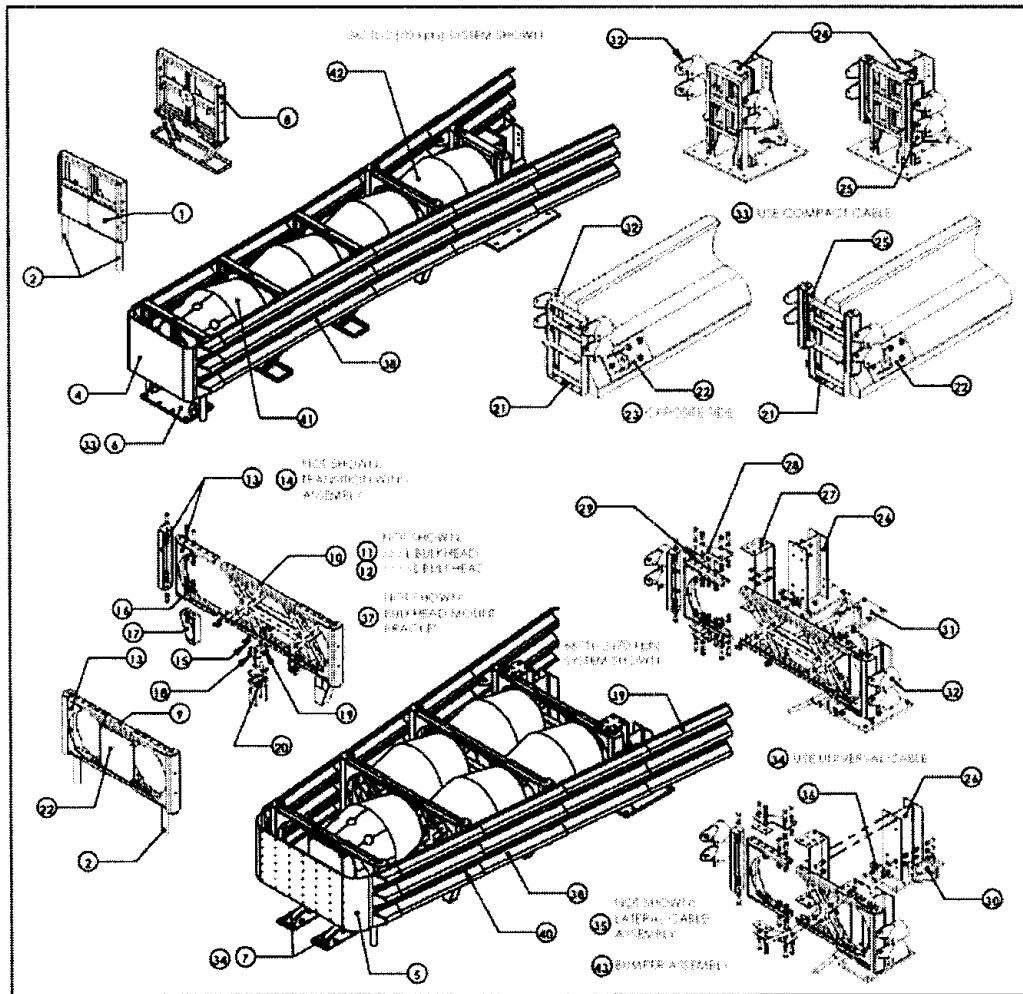

ITEM	PART DESCRIPTION	PART #
1	FRONT SUPPORT	B010528
2	FRONT SUPPORT LEG KIT	K001005
3	FRONT COLLISION PLATE	B030801
4	NOSE PIECE, NARROW	B010711
5	NOSE PIECE WIDE	B030902
6	FRONT CABLE ANCHOR, COMPACT	B010248
7	FRONT CABLE ANCHOR, UNIVERSAL	B010935
8	MIDDLE SUPPORT ASSEMBLY	B010530
9	XL BULKHEAD	B030521
10	XXL BULKHEAD	B030528
11	XXXL BULKHEAD	B030529
12	XXXXL BULKHEAD	B030532
13	WING ASSEMBLY	B030509
14	TRANSITION WING ASSEMBLY	B030910
15	EAC LOCATING TAB	B031112
16	BACKING PLATE	B030543
17	LEG	B030425
18	CABLE GUIDE MOUNT	B030411
19	LEVEL SPACER	B030551
20	CABLE GUIDE ASSEMBLY KIT	K001004
21	PCB BACKSTOP	B011007
22	REAR CABLE ANCHOR "R" (PCB)	B010929
23	REAR CABLE ANCHOR "L" (PCB)	B011041
24	COMPACT BACKSTOP	B010537
25	36" ADAPTER (PCB & COMPACT)	B031201
26	WIDE FLANGE BACKSTOP	B030668
27	BACKSTOP BLOCKOUT (WF)	B030713
28	WING BRACE (WF)	B030821
29	WING BRACE SPACER (WF)	B030823
30	REAR CABLE ANCHOR, WF	B031020
31	REAR CABLE ANCHOR, IND (WF)	B030938
32	PIPE PANEL MOUNT	B010651
33	CABLE, COMPACT	TBD
34	CABLE, UNIVERSAL	TBD
35	LATERAL CABLE ASSEMBLY	B031034
36	LATERAL SUPPORT MOUNT (WF)	B031011
37	BULKHEAD MOUNT BRACKET	B031010
38	SLIDING PANEL	B010202
39	END PANEL	B010659
40	SLIDING BOLT ASSEMBLY	K001003
41	ENERGY ABSORBING CARTRIDE, TYPE	B010802
42	ENERGY ABSORBING CARTRIDE, TYPE	B010722
43	BUMPER ASSEMBLY	B031035

REV	CHANGES	DATE	BY	REQ'D	NEXT ASSY	ITEM
				1	NA	1

SCALE: 1:1

	DATE	INIT
DRAWN BY	04/22/04	GAD
APPR'D BY		JSM

Standard Tolerance
Angular +/- 1/2 Deg
Fractional +/- 1/16
Dec XXX= +/- .010
Dec XX= +/- .030

TITLE : UNIVERSAL TAU-II PARTS LIST

MODEL	DRAWING NUMBER	REV
	A040416	

Figure 2

FHWA GUIDELINES ON GATING

The FHWA recommends that gating end terminals have a minimum clear zone of 22.5 x 6 meters (75 x 20 feet). This area should be clear of trees, poles, drop-offs, oncoming vehicle traffic and other hazards that a vehicle might encounter when it gates behind the terminal after an angle impact at or near the nose of the system, and attempts to recover. It is extremely important to consider clear zone requirements when selecting an end treatment for guardrail applications. Typically an end treatment for median applications requires bi-directional capability utilizing double-faced guardrail. Narrow medians should always be protected with non-gating end treatments.

SPECIFICATIONS

Length	9601 mm	(31'6")
Height	686 mm	(27")
Width	635 mm	(25")
Weight	920 kg	(2025 lb)

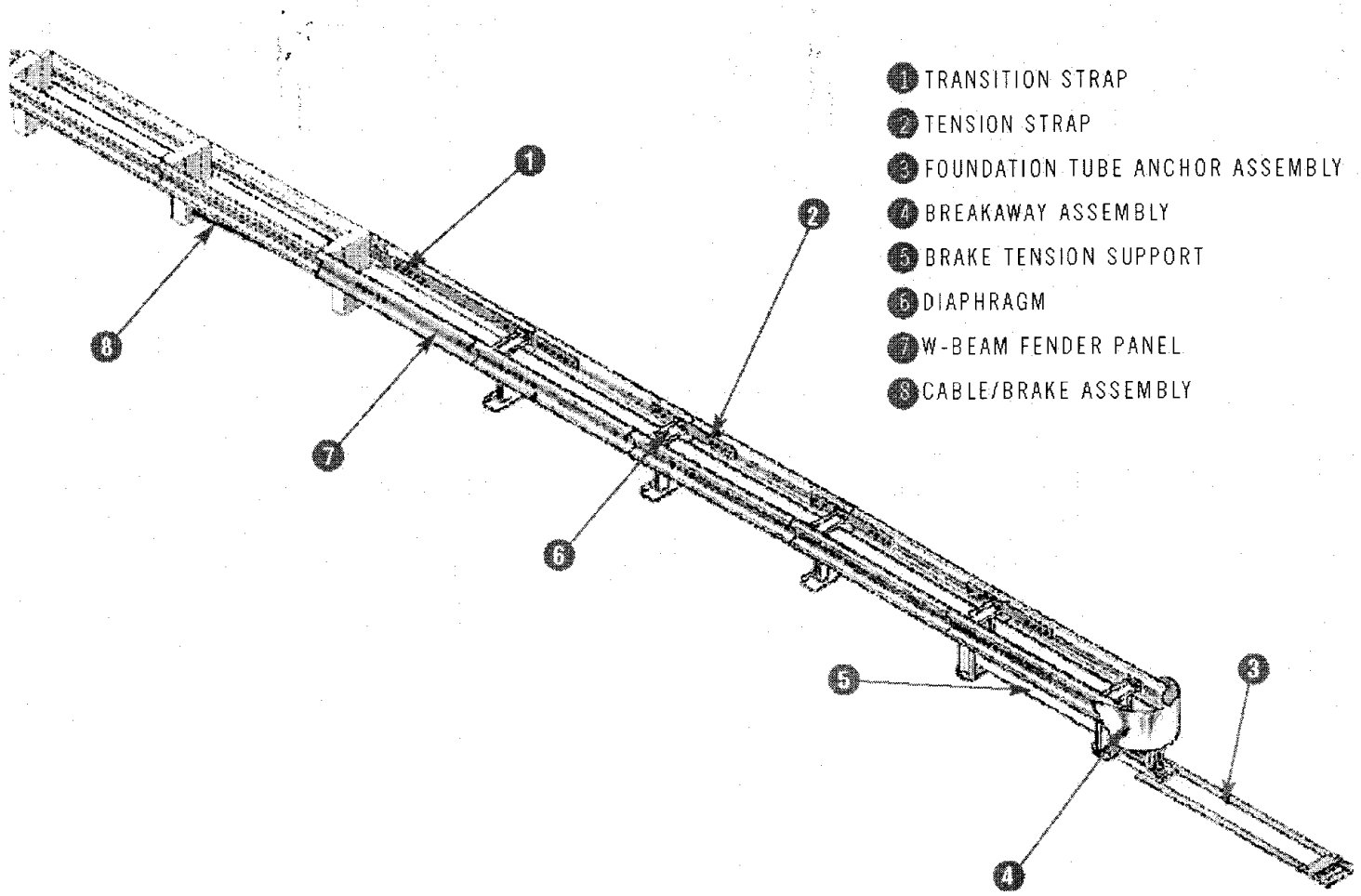

Quixote Transportation Safety

SAVING LIVES BY DESIGN

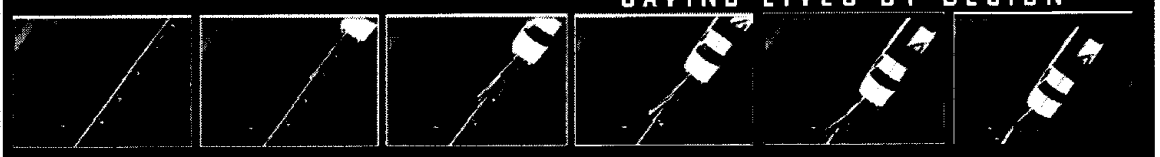

WWW.QUIXTRANS.COM

Distributed By:

ENERGY ABSORPTION SYSTEMS, INC.

35 East Wacker Drive • Chicago, IL 60601
Tel: (312) 467-6750 • Fax: (312) 467-9625
www.energyabsorption.com

General specifications for the Brakemaster 350 System are subject to change without notice to reflect improvements and upgrades. Additional information is available in the Product Manual for this system. Contact Energy Absorption Systems for details.

BRAKEMASTER® 350 SYSTEM
THE EASY-TO-INSTALL GUARDRAIL END TREATMENT

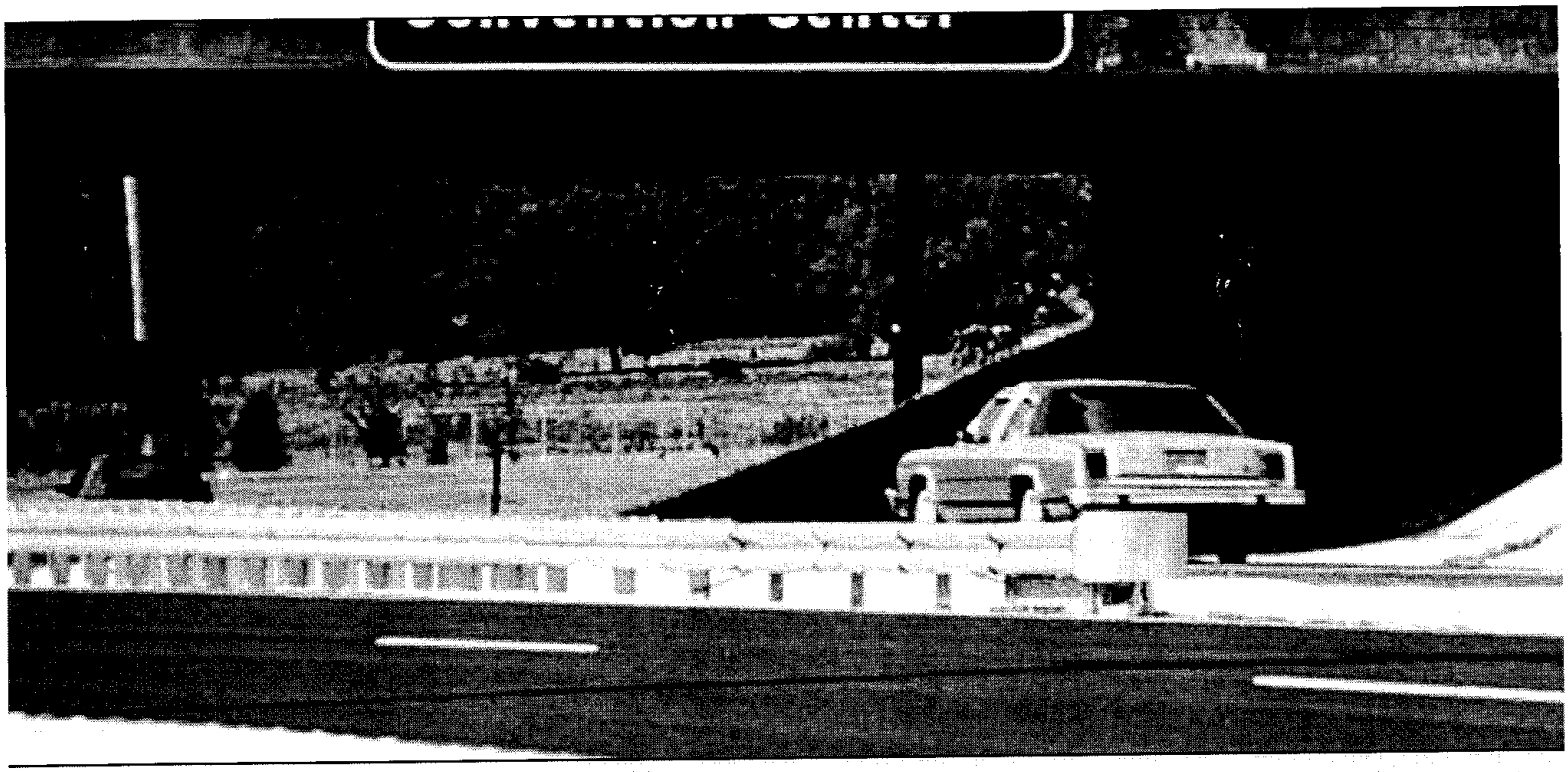

OVERVIEW

The Brakemaster 350 is the quick and easy solution for shielding dangerous guardrail ends at wide median and roadside sites with adequate clear zones. It provides superior bi-directional protection and DOES NOT REQUIRE A CONCRETE ANCHOR OR PAD, making it fast and easy to install. The Brakemaster 350 is available at a VERY COMPETITIVE PRICE. Plus additional cost savings are realized because of reduced installation time.

SATISFIES NCHRP 350, TEST LEVELS 1, 2, & 3

The Brakemaster System successfully meets NCHRP 350, Test Level 3 as a redirective gating end treatment. The system's unique design consists of a framework of w-beam steel guardrail panels which move rearward during head-on impacts. The system also safely redirects vehicles in side impacts. As a gating system, it requires sufficient clear zone behind the system.

FEATURES AND BENEFITS

- Meets NCHRP 350, Test Level 3 as a redirective, gating guardrail end treatment.
- Easy installation requires only two anchor foundation tubes (compared to six tubes for competitive systems).
- Metal diaphragm posts rest on "slip bases" that set right on the ground — no wood post holes to dig!
- Absolutely no concrete is required.
- All replacement components are above ground for fast replacement after impact — no wood posts to remove!

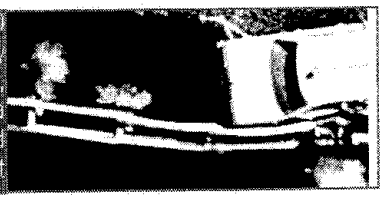

The Brakemaster 350 System successfully meets NCHRP 350, Test Level 3 as a redirective gating end treatment

ENERGY ABSORPTION SYSTEMS, INC.

SAVING LIVES BY DESIGN

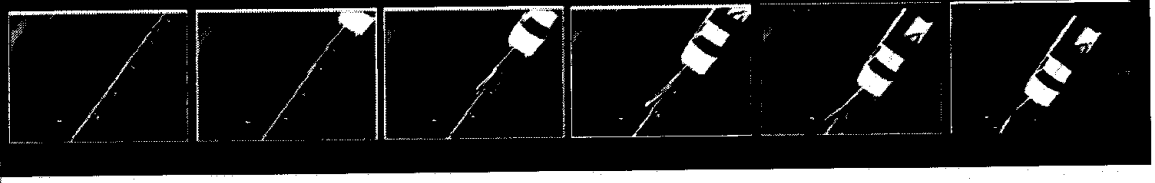

WWW.ENERGYABSORPTION.COM

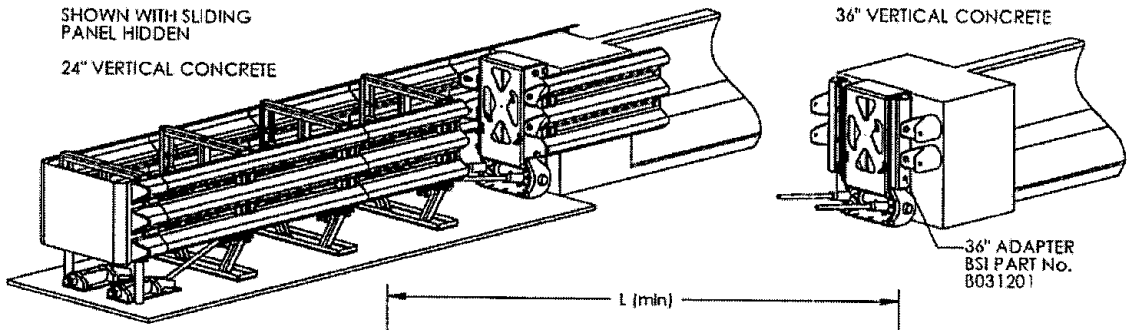

NOTES:
1.) FLUSH MOUNT BACKSTOP SYSTEMS ARE INTENDED FOR APPLICATIONS WHERE THE HAZARD WIDTH EXCEEDS THE LIMITATIONS OF THE PCB BACKSTOP. FLUSH MOUNT SYSTEMS ARE ALSO APPLICABLE IN LOCATIONS WITH LIMITED FOUNDATION SIZE.
2.) THE FLUSH MOUNT BACKSTOP MAY BE ATTACHED TO REINFORCED SAFETY SHAPE OR VERTICAL CONCRETE STRUCTURES UP TO 36" [914] WIDE. STRUCTURES OVER 24"[610] WIDE REQUIRE 36" ADAPTER B031201. EDGES OF VERTICLE CONCRETE MAY REQUIRE CHAMFER ACCORDING TO LOCAL STANDARDS.
3.) VERTICAL SLOTS ON THE BACKSTOP ALLOW REMOVAL/ REPLACEMENT OF THE BACKSTOP. ANCHORS MUST BE PLACED AT THE TOP OF SAID SLOTS TO BE EFFECTIVE.
4.) FLUSH MOUNT BACKSTOP SYSTEMS USE THE SAME CABLE USED IN ALL PARALLEL SYSTEMS. THE CABLE IS INSTALLED WITH THE THREADED TENSIONING END FORWARD. THE LOOPED END IS PINNED IN PLACE AT THE BACKSTOP.
5.) THE FRONT CABLE ANCHOR USES AN INSERTED KEY TO KEEP THE THREADED STUD FROM ROTATING DURING TENSIONING.
6.) ANCHOR ACCORDING TO BSI SPECIFICATIONS. REFERENCE BSI DRAWING A040113.

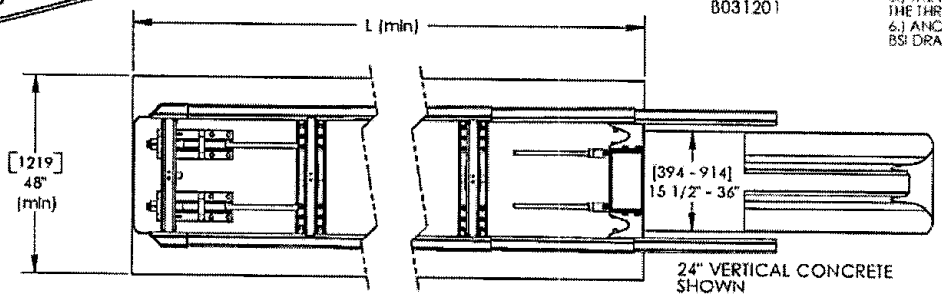

FOUNDATION PAD LENGTH DIMENSION "L" (MINIMUM)			
BAY No.	CAPACITY (kph)	L (ft-in)	L (mm)
2	50	6' - 11 1/2"	2121
3	60	9' - 9 1/2"	2985
4	70	12' - 7 1/2"	3849
5	80	15' - 5 1/2"	4712
6	85	19' - 4"	5588
7	90	21' - 2"	6452
8	100	24' - 0"	7315
9	105	26' - 10"	8179
10	110	29' - 8 1/2"	9055
11	115	32' - 6 1/2"	9919
12	120	35' - 4 1/2"	10782

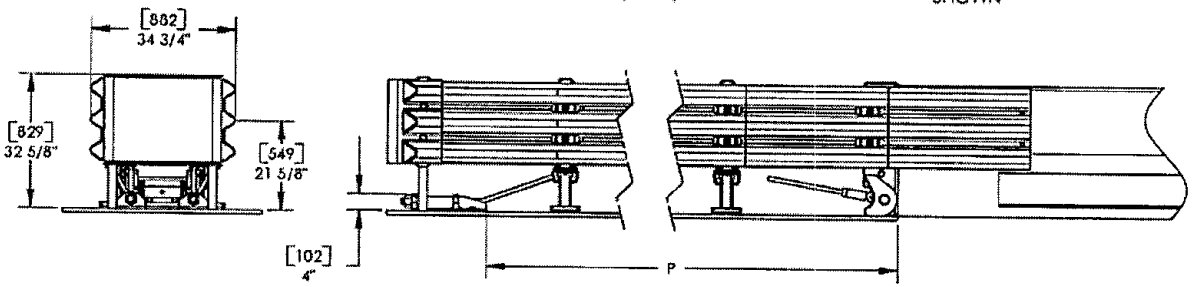

FRONT ANCHOR PLACEMENT DIMENSION "P"			
BAY No.	CAPACITY (kph)	P (ft-in)	P (mm)
2	50	4' - 11 1/2"	1511
3	60	7' - 9 1/2"	2375
4	70	10' - 7 1/2"	3239
5	80	13' - 5 1/2"	4102
6	85	16' - 4"	4978
7	90	19' - 2"	5842
8	100	22' - 0"	6706
9	105	24' - 10"	7569
10	110	27' - 8 1/2"	8446
11	115	30' - 6 1/2"	9309
12	120	33' - 4 1/2"	10173

NOTE:
THICKNESS OF WELD TO BE EQUAL TO THE THINNER OF 2 PIECES BEING JOINED. WELD TO BE ALL AROUND UNLESS OTHERWISE SPECIFIED

© 2004 Barrier Systems Inc
The information herein is proprietary to Barrier Systems Inc. shall not be disclosed, duplicated or used otherwise without the express written approval of Barrier Systems Inc.

REV	CHANGES	DATE	BY	REQ'D	NEXT ASSY	ITEM
				1	1BD	1

SCALE: 1:24
DRAWN BY: 4/21/04 DATE BJT GAD GAD
General Tolerance: Angular ±1/2 Deg. Decimal ±.005 Dec. XXX ±.010 Dec. XXX ±.005
TITLE: APPLICATION, FLUSH MOUNT BACKSTOP

MODEL	DRAWING NUMBER	REV
	B040239	

Figure 3