ER-43J6(004)E

Dist	COUNTY	ROUTE	POST MILES TOTAL PROJECT	SHEET No.	TOTAL SHEETS
05	Mon	1	46.9, 50.0	1	18

STATE OF CALIFORNIA

DEPARTMENT OF TRANSPORTATION

PROJECT PLANS FOR CONSTRUCTION ON

STATE HIGHWAY

IN MONTEREY COUNTY
NEAR BIG SUR
AT 0.3 MILE NORTH OF BIG SUR RIVER BRIDGE AND
AT 2.0 MILES NORTH OF JUAN HIGUERA CREEK BRIDGE

TO BE SUPPLEMENTED BY STANDARD PLANS DATED MAY 2006

INDEX OF PLANS

SHEET No.	DESCRIPTION
1	TITLE AND LOCATION MAP
2-3	TYPICAL CROSS SECTIONS
4-5	LAYOUTS
6	CONSTRUCTION DETAILS
7	CONTOUR GRADING
8	CONSTRUCTION AREA SIGNS
9	TRAFFIC HANDLING PLAN AND QUANTITIES
10	SUMMARY OF QUANTITIES
11-18	REVISED AND NEW STANDARD PLANS

THE STANDARD PLANS LIST APPLICABLE TO THIS CONTRACT IS INCLUDED IN THE NOTICE TO BIDDERS AND SPECIAL PROVISIONS BOOK.

LOCATION MAP

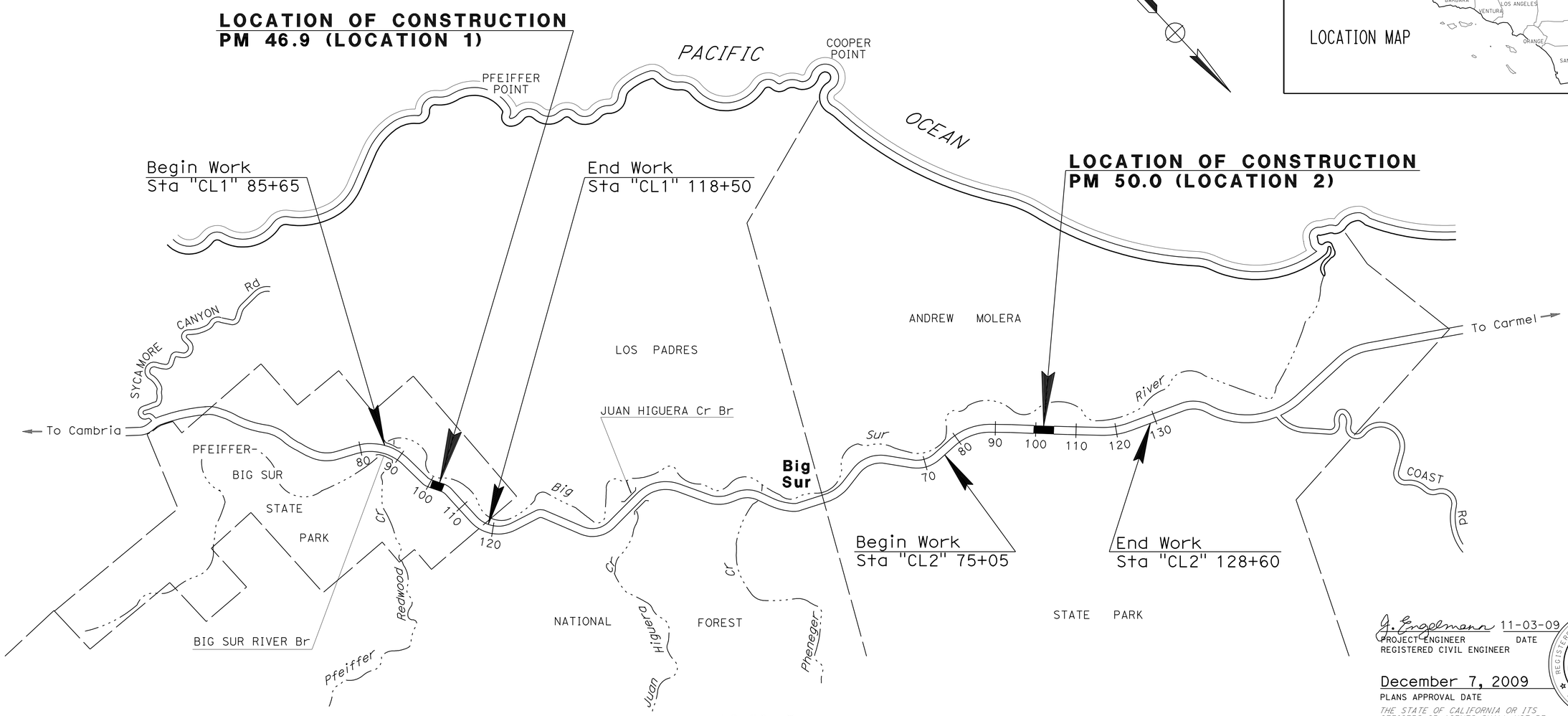

NO SCALE

THE CONTRACTOR SHALL POSSESS THE CLASS (OR CLASSES) OF LICENSE AS SPECIFIED IN THE "NOTICE TO BIDDERS."

J. Engelmann 11-03-09
PROJECT ENGINEER DATE
REGISTERED CIVIL ENGINEER

REGISTERED PROFESSIONAL ENGINEER J. G. ENGELMANN No. 60098 Exp. 6-30-10 CIVIL STATE OF CALIFORNIA

December 7, 2009
PLANS APPROVAL DATE

THE STATE OF CALIFORNIA OR ITS OFFICERS OR AGENTS SHALL NOT BE RESPONSIBLE FOR THE ACCURACY OR COMPLETENESS OF SCANNED COPIES OF THIS PLAN SHEET.

PROJECT MANAGER DAVID RASMUSSEN

DESIGN ENGINEER JOHN FOUCHE

LAST REVISION 11-03-09

DATE PLOTTED => 10-FEB-2010
TIME PLOTTED => 05:50

CONTRACT No. 05-0P6804

Dist	COUNTY	ROUTE	POST MILES TOTAL PROJECT	SHEET No.	TOTAL SHEETS
05	Mon	1	46.9, 50.0	2	18

J. Engelmann 11-03-09
REGISTERED CIVIL ENGINEER DATE

12-7-09
PLANS APPROVAL DATE

REGISTERED PROFESSIONAL ENGINEER J. G. ENGELMANN No. 60098 Exp 6-30-10 CIVIL STATE OF CALIFORNIA

THE STATE OF CALIFORNIA OR ITS OFFICERS OR AGENTS SHALL NOT BE RESPONSIBLE FOR THE ACCURACY OR COMPLETENESS OF SCANNED COPIES OF THIS PLAN SHEET.

NOTES:

1. DIMENSIONS OF THE PAVEMENT STRUCTURES (STRUCTURAL SECTIONS) ARE SUBJECT TO TOLERANCES SPECIFIED IN THE STANDARD SPECIFICATIONS.
2. SUPERELEVATION AS SHOWN OR AS DIRECTED BY THE ENGINEER.

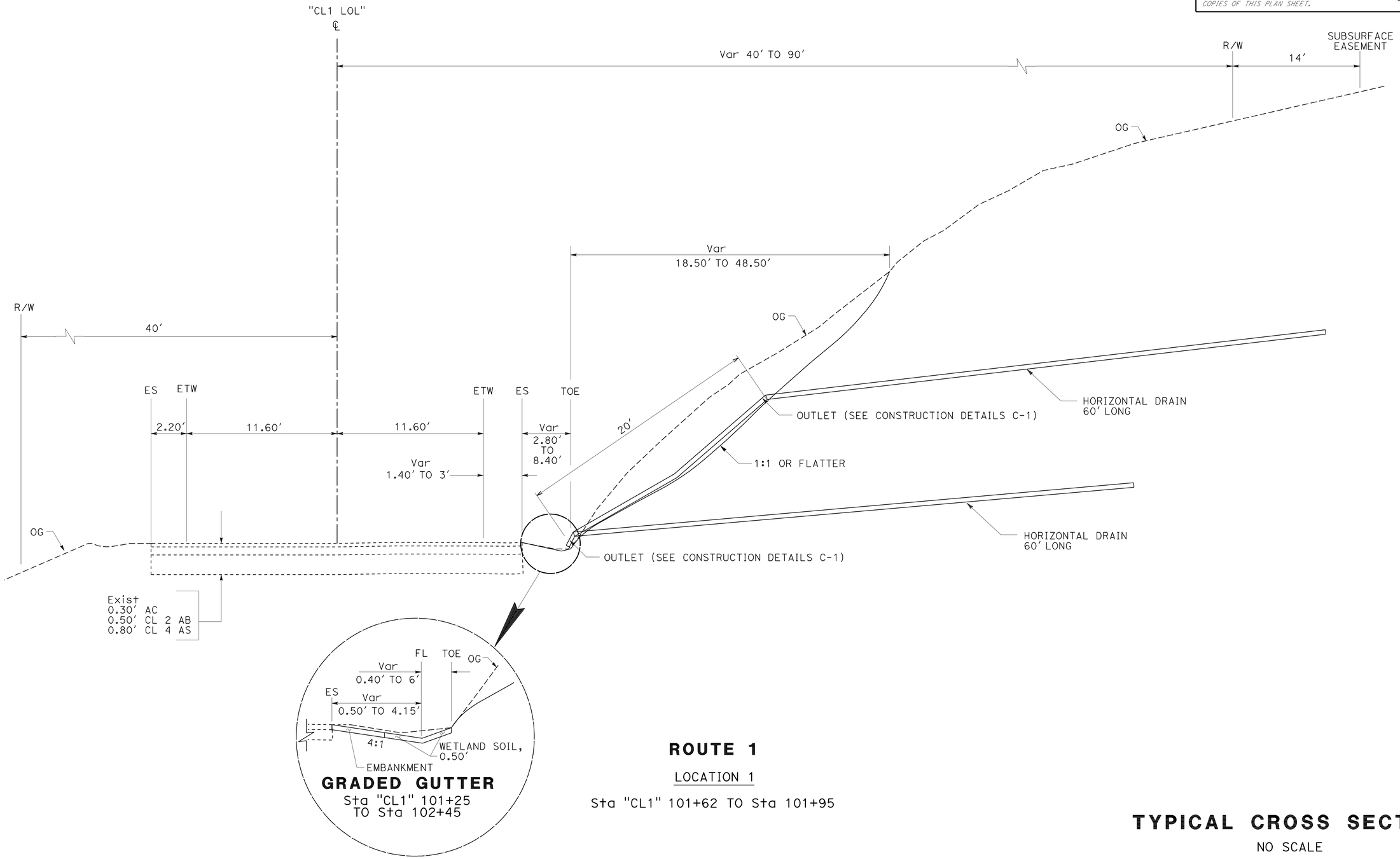

ROUTE 1

LOCATION 1

Sta "CL1" 101+62 TO Sta 101+95

TYPICAL CROSS SECTION

NO SCALE

X-1

STATE OF CALIFORNIA - DEPARTMENT OF TRANSPORTATION
Caltrans®
DESIGN

FUNCTIONAL SUPERVISOR: JOHN FOUCHE
CALCULATED-DESIGNED BY: JO ANNE G ENGELMANN
CHECKED BY: RAY RIAHI
REVISED BY
DATE REVISED

LAST REVISION 11-03-09
DATE PLOTTED => 12-DEC-2009
TIME PLOTTED => 07:06

Dist	COUNTY	ROUTE	POST MILES TOTAL PROJECT	SHEET No.	TOTAL SHEETS
05	Mon	1	46.9, 50.0	3	18

J. Engelmann 11-03-09
REGISTERED CIVIL ENGINEER DATE

12-7-09
PLANS APPROVAL DATE

REGISTERED PROFESSIONAL ENGINEER J. G. ENGELMANN No. 60098 Exp 6-30-10 CIVIL STATE OF CALIFORNIA

THE STATE OF CALIFORNIA OR ITS OFFICERS OR AGENTS SHALL NOT BE RESPONSIBLE FOR THE ACCURACY OR COMPLETENESS OF SCANNED COPIES OF THIS PLAN SHEET.

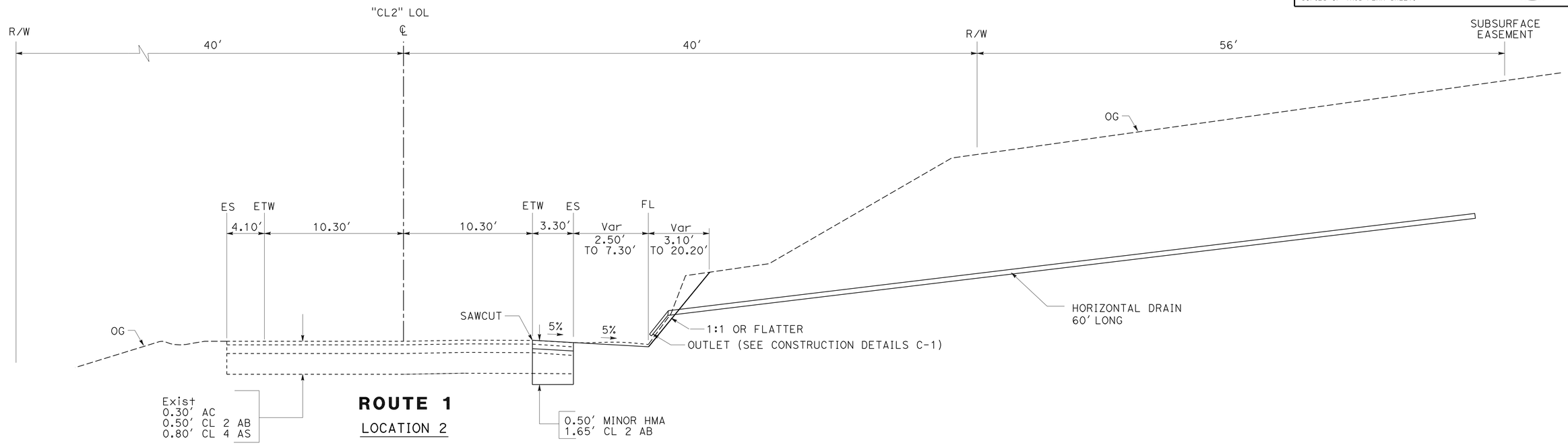

ROUTE 1

LOCATION 2

Sta "CL2" 100+50 TO Sta 103+20

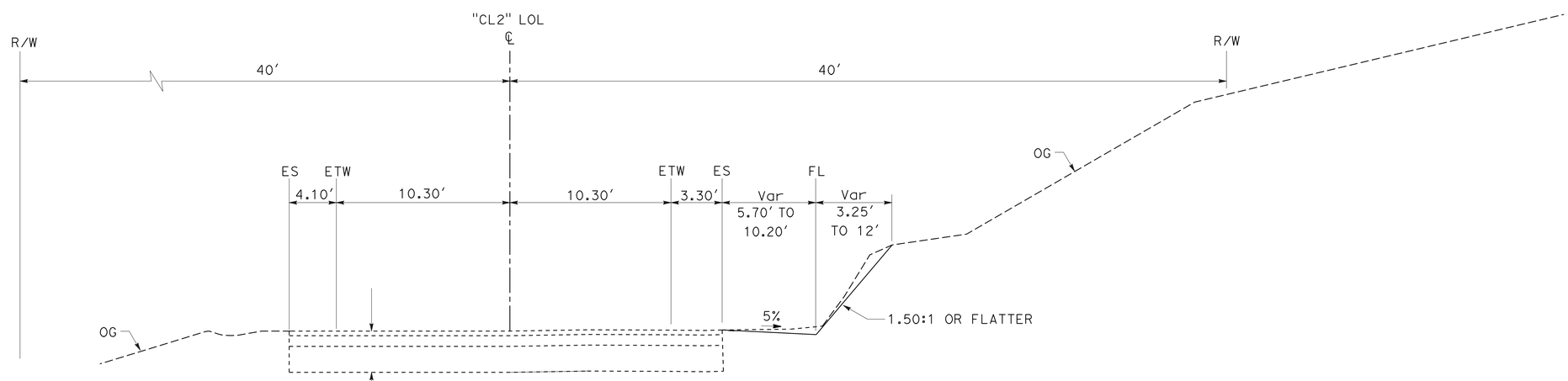

ROUTE 1

LOCATION 2

Sta "CL2" 100+05 TO Sta 100+50
Sta "CL2" 103+20 TO Sta 103+60

TYPICAL CROSS SECTION

NO SCALE

X-2

REVISED BY	DATE REVISED
RAY RIAHI	JO ANNE G ENGELMANN

CALCULATED-DESIGNED BY | CHECKED BY

FUNCTIONAL SUPERVISOR: JOHN FOUCHE

STATE OF CALIFORNIA - DEPARTMENT OF TRANSPORTATION

Caltrans

DESIGN

LAST REVISION 11-03-09 | DATE PLOTTED => 12-DEC-2009 | TIME PLOTTED => 07:06

Dist	COUNTY	ROUTE	POST MILES TOTAL PROJECT	SHEET No.	TOTAL SHEETS
05	Mon	1	46.9, 50.0	4	18

J. Engelmann 11-03-09
REGISTERED CIVIL ENGINEER DATE

12-7-09
PLANS APPROVAL DATE

REGISTERED PROFESSIONAL ENGINEER J. G. ENGELMANN No. 60098 Exp 6-30-10 CIVIL STATE OF CALIFORNIA

THE STATE OF CALIFORNIA OR ITS OFFICERS OR AGENTS SHALL NOT BE RESPONSIBLE FOR THE ACCURACY OR COMPLETENESS OF SCANNED COPIES OF THIS PLAN SHEET.

NOTE:

FOR ACCURATE RIGHT OF WAY AND ACCESS DATA, CONTACT RIGHT OF WAY ENGINEERING AT THE DISTRICT OFFICE.

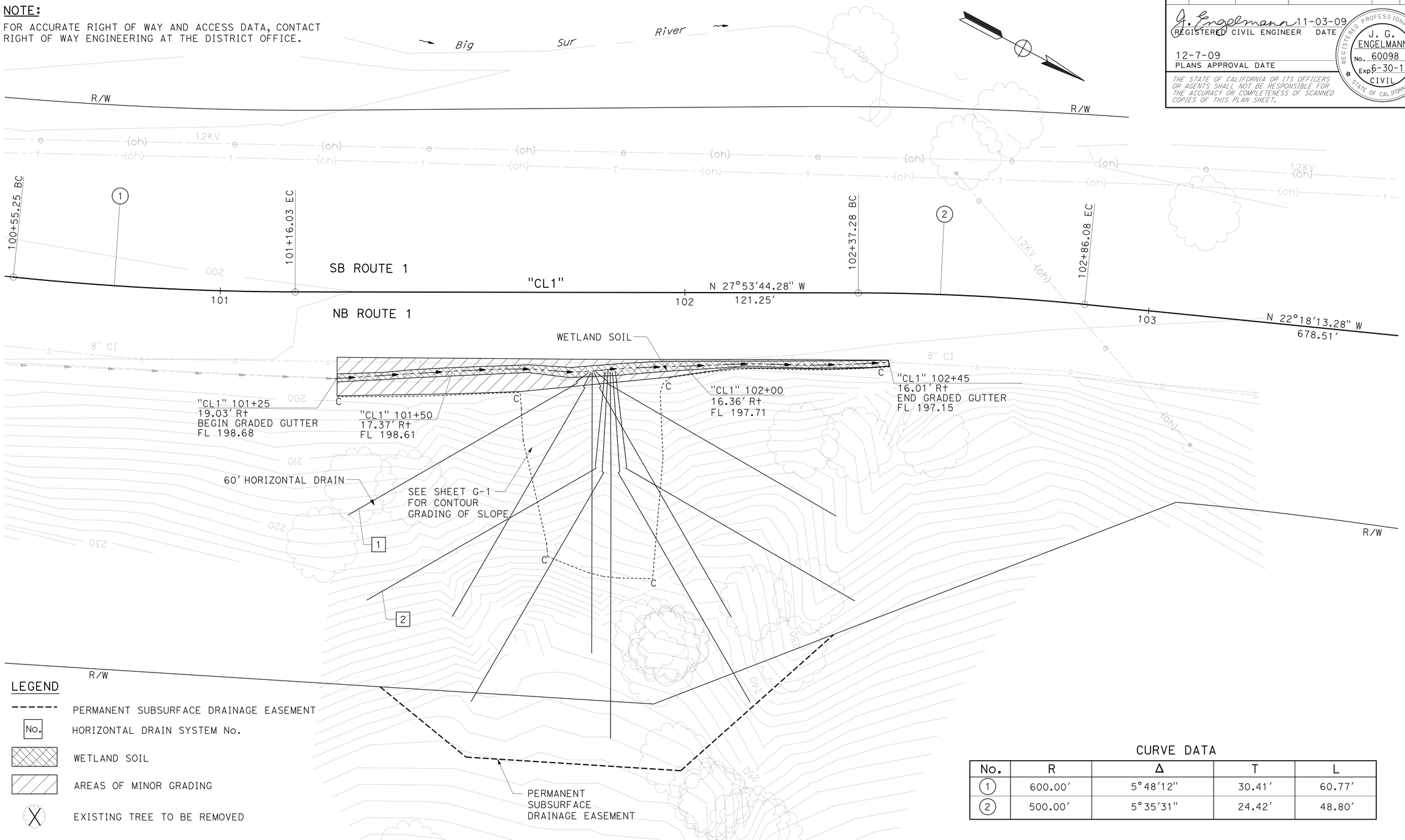

LEGEND

- PERMANENT SUBSURFACE DRAINAGE EASEMENT
- No. HORIZONTAL DRAIN SYSTEM No.
- WETLAND SOIL
- AREAS OF MINOR GRADING
- EXISTING TREE TO BE REMOVED

HORIZONTAL DRAIN TABLE

SYSTEM No.	STATION	OFFSET	BEARING
1	101+80	20.70' Rt	S 57°53'44" E
2	101+84	39.10' Rt	S 57°53'44" E

CURVE DATA

No.	R	Δ	T	L
1	600.00'	5°48'12"	30.41'	60.77'
2	500.00'	5°35'31"	24.42'	48.80'

LOCATION 1
PM 46.9

LAYOUT

SCALE: 1"=10' **L-1**

STATE OF CALIFORNIA - DEPARTMENT OF TRANSPORTATION
Caltrans
DESIGN

FUNCTIONAL SUPERVISOR: JOHN FOUCHE
CALCULATED-DESIGNED BY: JO ANNE G ENGELMANN
CHECKED BY: RAY RIAHI
REVISED BY
DATE REVISED

LAST REVISION 11-03-09 DATE PLOTTED => 12-DEC-2009 TIME PLOTTED => 07:06

Dist	COUNTY	ROUTE	POST MILES TOTAL PROJECT	SHEET No.	TOTAL SHEETS
05	Mon	1	46.9, 50.0	5	18

J. Engelmann 11-03-09
REGISTERED CIVIL ENGINEER DATE

12-7-09
PLANS APPROVAL DATE

REGISTERED PROFESSIONAL ENGINEER J. G. ENGELMANN No. 60098 Exp 6-30-10 CIVIL STATE OF CALIFORNIA

THE STATE OF CALIFORNIA OR ITS OFFICERS OR AGENTS SHALL NOT BE RESPONSIBLE FOR THE ACCURACY OR COMPLETENESS OF SCANNED COPIES OF THIS PLAN SHEET.

NOTE:

FOR ACCURATE RIGHT OF WAY AND ACCESS DATA, CONTACT RIGHT OF WAY ENGINEERING AT THE DISTRICT OFFICE.

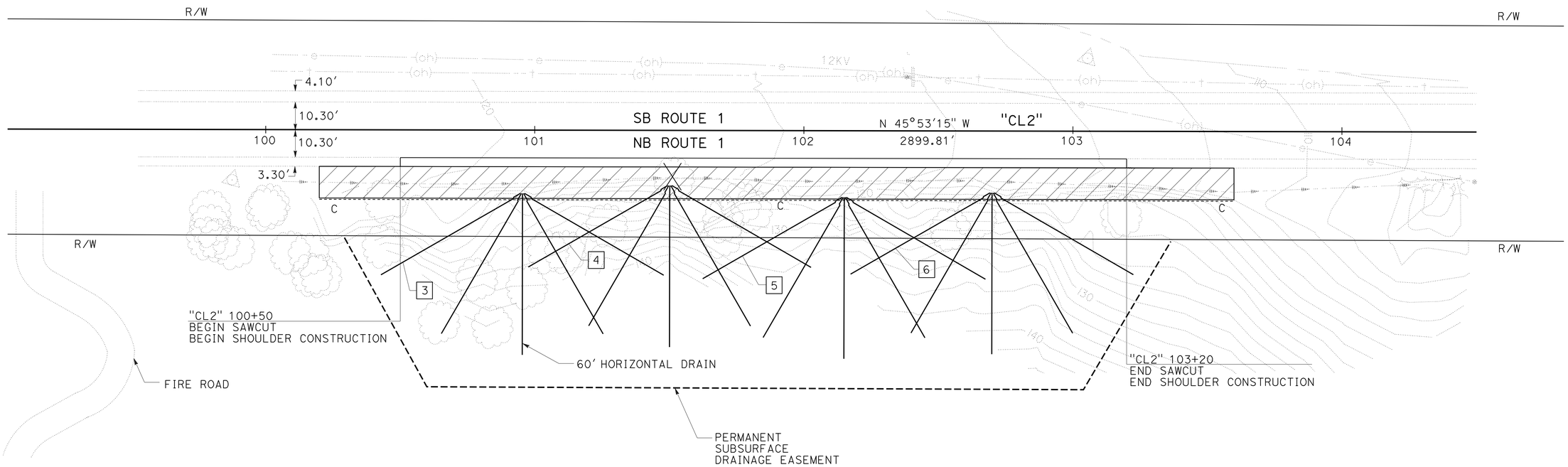

HORIZONTAL DRAIN TABLE

SYSTEM No.	STATION	OFFSET	BEARING
3	100+95	23.53 Rt	S 75°53′44″ E
4	101+50	20.52 Rt	S 75°53′44″ E
5	102+15	24.76 Rt	S 75°53′44″ E
6	102+70	22.97 Rt	S 75°53′44″ E

LOCATION 2
PM 50.0

LAYOUT
SCALE: 1"=20′ **L-2**

STATE OF CALIFORNIA - DEPARTMENT OF TRANSPORTATION
Caltrans
DESIGN

FUNCTIONAL SUPERVISOR: JOHN FOUCHE
CALCULATED-DESIGNED BY: RAY RIAHI
CHECKED BY: JO ANNE G ENGELMANN
REVISED BY
DATE REVISED

LAST REVISION 11-03-09
DATE PLOTTED => 12-DEC-2009
TIME PLOTTED => 07:07

Dist	COUNTY	ROUTE	POST MILES TOTAL PROJECT	SHEET No.	TOTAL SHEETS
05	Mon	1	46.9, 50.0	6	18

J. Engelmann 11-03-09
REGISTERED CIVIL ENGINEER DATE

12-7-09
PLANS APPROVAL DATE

REGISTERED PROFESSIONAL ENGINEER J. G. ENGELMANN No. 60098 Exp 6-30-10 CIVIL STATE OF CALIFORNIA

THE STATE OF CALIFORNIA OR ITS OFFICERS OR AGENTS SHALL NOT BE RESPONSIBLE FOR THE ACCURACY OR COMPLETENESS OF SCANNED COPIES OF THIS PLAN SHEET.

NOTES:

1. CONNECTOR UNIT AND DOWNDRAIN SHALL BE CONSTRUCTED AT FINISHED SLOPE GRADE.
2. AREA ADJACENT TO CONNECTOR AND DOWNDRAIN TO BE PROTECTED DURING PAINTING.

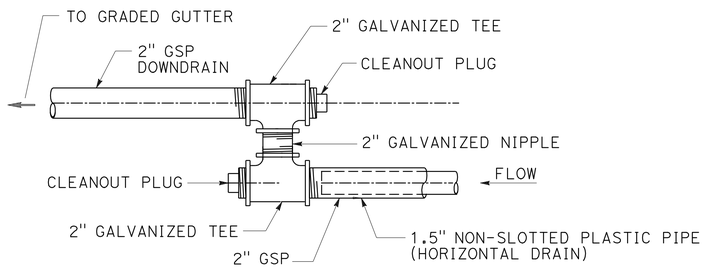

PLAN

HORIZONTAL DRAIN CONNECTOR UNIT

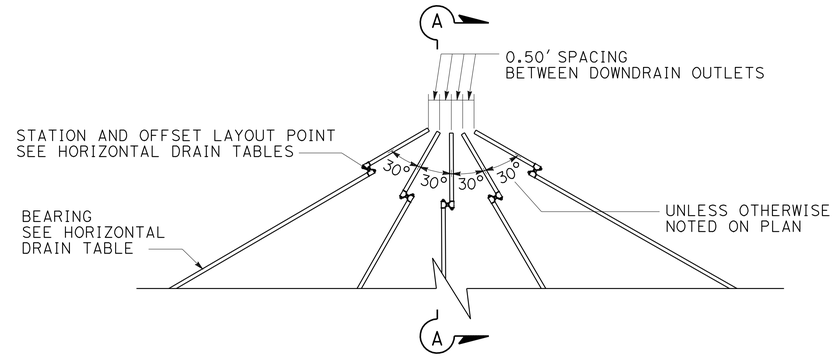

PLAN

HORIZONTAL DRAIN OUTLET

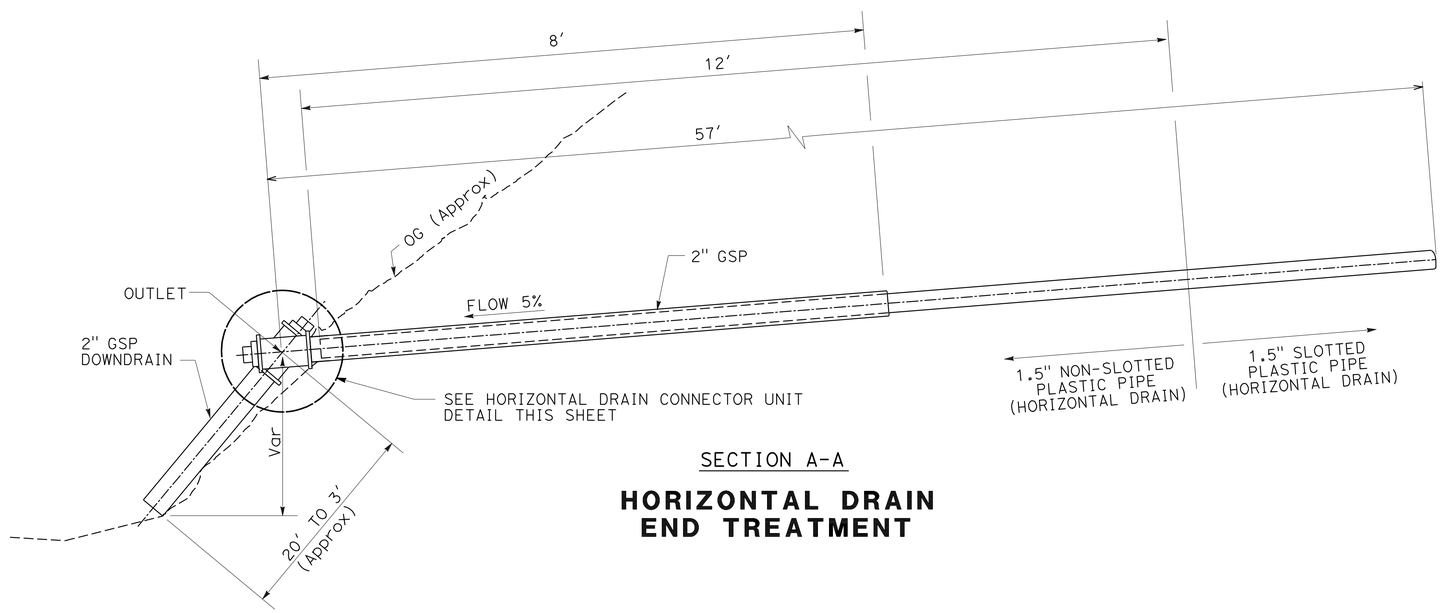

SECTION A-A

HORIZONTAL DRAIN END TREATMENT

CONSTRUCTION DETAILS

NO SCALE

C-1

STATE OF CALIFORNIA - DEPARTMENT OF TRANSPORTATION
Caltrans
DESIGN

FUNCTIONAL SUPERVISOR: JOHN FOUCHE
CALCULATED-DESIGNED BY: RAY RIAHI
CHECKED BY: JO ANNE G ENGELMANN
REVISED BY
DATE REVISED

LAST REVISION 11-03-09
DATE PLOTTED => 12-DEC-2009
TIME PLOTTED => 07:07

Dist	COUNTY	ROUTE	POST MILES TOTAL PROJECT	SHEET No.	TOTAL SHEETS
05	Mon	1	46.9, 50.0	7	18

J. Engelmann 11-03-09
REGISTERED CIVIL ENGINEER DATE

12-7-09
PLANS APPROVAL DATE

REGISTERED PROFESSIONAL ENGINEER J. G. ENGELMANN No. 60098 Exp 6-30-10 CIVIL STATE OF CALIFORNIA

THE STATE OF CALIFORNIA OR ITS OFFICERS OR AGENTS SHALL NOT BE RESPONSIBLE FOR THE ACCURACY OR COMPLETENESS OF SCANNED COPIES OF THIS PLAN SHEET.

NOTE:

FOR ACCURATE RIGHT OF WAY AND ACCESS DATA, CONTACT RIGHT OF WAY ENGINEERING AT THE DISTRICT OFFICE.

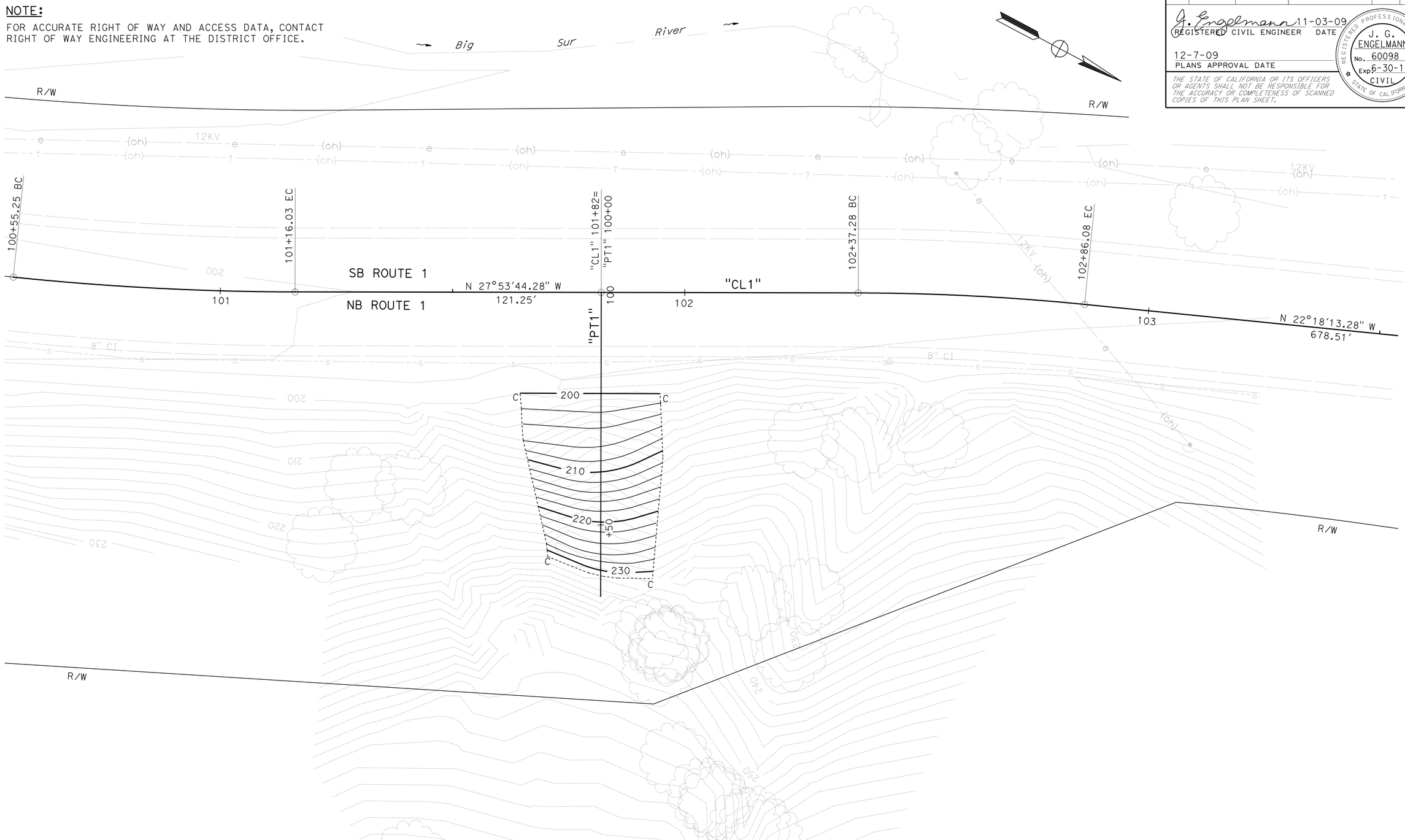

LOCATION 1
PM 46.9

THIS PLAN ACCURATE FOR CONTOUR GRADING WORK ONLY.

CONTOUR GRADING

SCALE: 1"=10'

G-1

REVISED BY	DATE REVISED
RAY RIAHI	JO ANNE G ENGELMANN

CALCULATED-DESIGNED BY
CHECKED BY

FUNCTIONAL SUPERVISOR
JOHN FOUCHE

STATE OF CALIFORNIA - DEPARTMENT OF TRANSPORTATION
Caltrans
DESIGN

LAST REVISION 11-03-09 DATE PLOTTED => 12-DEC-2009 TIME PLOTTED => 07:07

Dist	COUNTY	ROUTE	POST MILES TOTAL PROJECT	SHEET No.	TOTAL SHEETS
05	Mon	1	46.9, 50.0	8	18

J. Engelmann 11-03-09
REGISTERED CIVIL ENGINEER DATE

12-7-09
PLANS APPROVAL DATE

REGISTERED PROFESSIONAL ENGINEER J. G. ENGELMANN No. 60098 Exp 6-30-10 CIVIL STATE OF CALIFORNIA

THE STATE OF CALIFORNIA OR ITS OFFICERS OR AGENTS SHALL NOT BE RESPONSIBLE FOR THE ACCURACY OR COMPLETENESS OF SCANNED COPIES OF THIS PLAN SHEET.

STATIONARY MOUNTED CONSTRUCTION AREA SIGNS

SIGN No.	SIGN CODE	PANEL SIZE	SIGN MESSAGE	No. OF POST AND SIZE	No. OF SIGNS
A	W20-1	36" X 36"	ROAD WORK AHEAD	1 - 4" X 4"	4
B	G20-2	36" X 18"	END ROAD WORK	1 - 4" X 4"	4

NOTE: EXACT LOCATIONS TO BE DETERMINED BY THE ENGINEER.

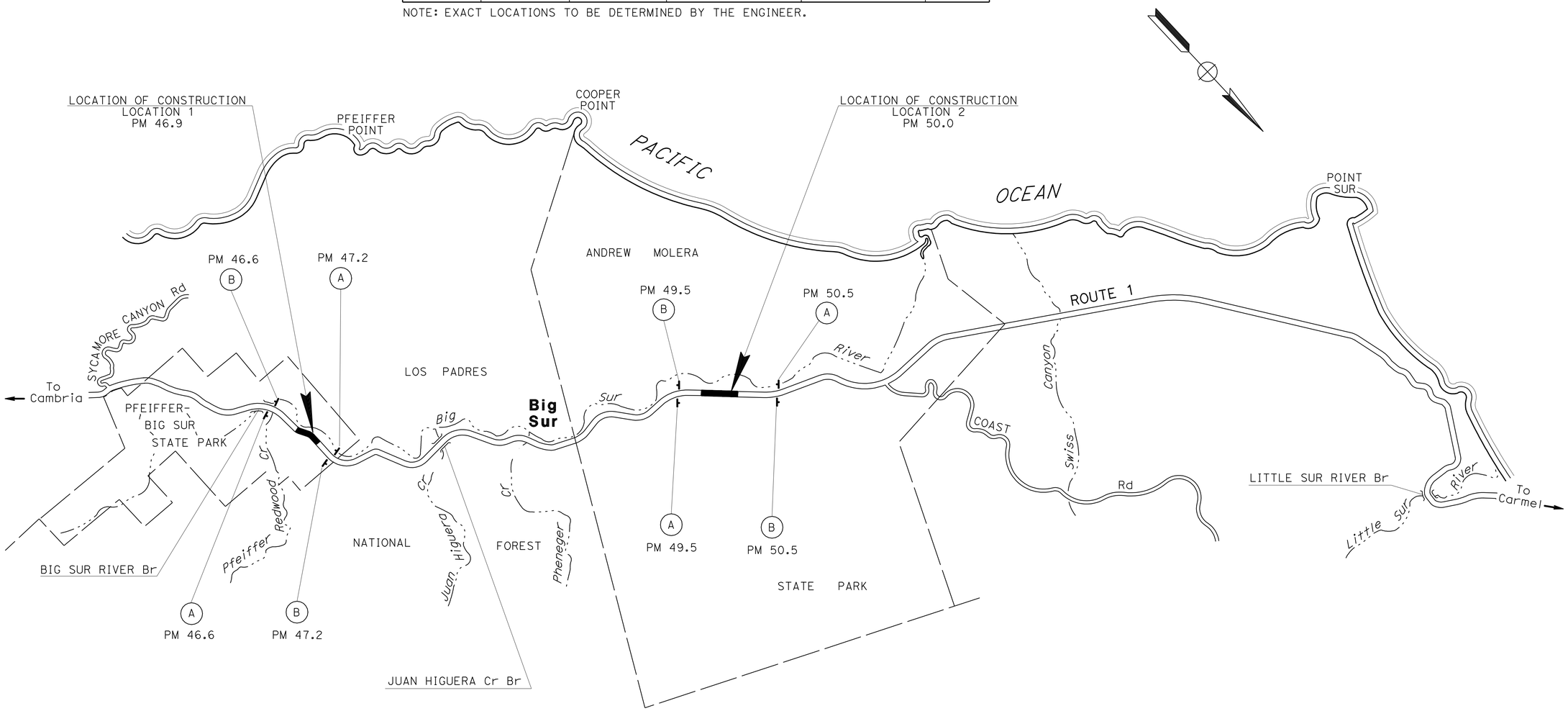

THIS PLAN ACCURATE FOR CONSTRUCTION AREA SIGN WORK ONLY.

CONSTRUCTION AREA SIGNS

NO SCALE

CS-1

STATE OF CALIFORNIA - DEPARTMENT OF TRANSPORTATION
Caltrans DESIGN

FUNCTIONAL SUPERVISOR: JOHN FOUCHE
CALCULATED-DESIGNED BY: JO ANNE G ENGELMANN
CHECKED BY: RAY RIAHI
REVISED BY
DATE REVISED

LAST REVISION 11-03-09
DATE PLOTTED => 12-DEC-2009
TIME PLOTTED => 07:07

Dist	COUNTY	ROUTE	POST MILES TOTAL PROJECT	SHEET No.	TOTAL SHEETS
05	Mon	1	46.9, 50.0	9	18

J. Engelmann 11-03-09
REGISTERED CIVIL ENGINEER DATE

12-7-09
PLANS APPROVAL DATE

REGISTERED PROFESSIONAL ENGINEER J. G. ENGELMANN No. 60098 Exp 6-30-10 CIVIL STATE OF CALIFORNIA

THE STATE OF CALIFORNIA OR ITS OFFICERS OR AGENTS SHALL NOT BE RESPONSIBLE FOR THE ACCURACY OR COMPLETENESS OF SCANNED COPIES OF THIS PLAN SHEET.

NOTE:

1. (A) (B) (C) EXISTING CALTRANS OWNED CMS, MESSAGE PROVIDED BY DISTRICT 5 TRAFFIC MANAGEMENT CENTER.

ABBREVIATION:

PCMS - PORTABLE CHANGEABLE MESSAGE SIGN

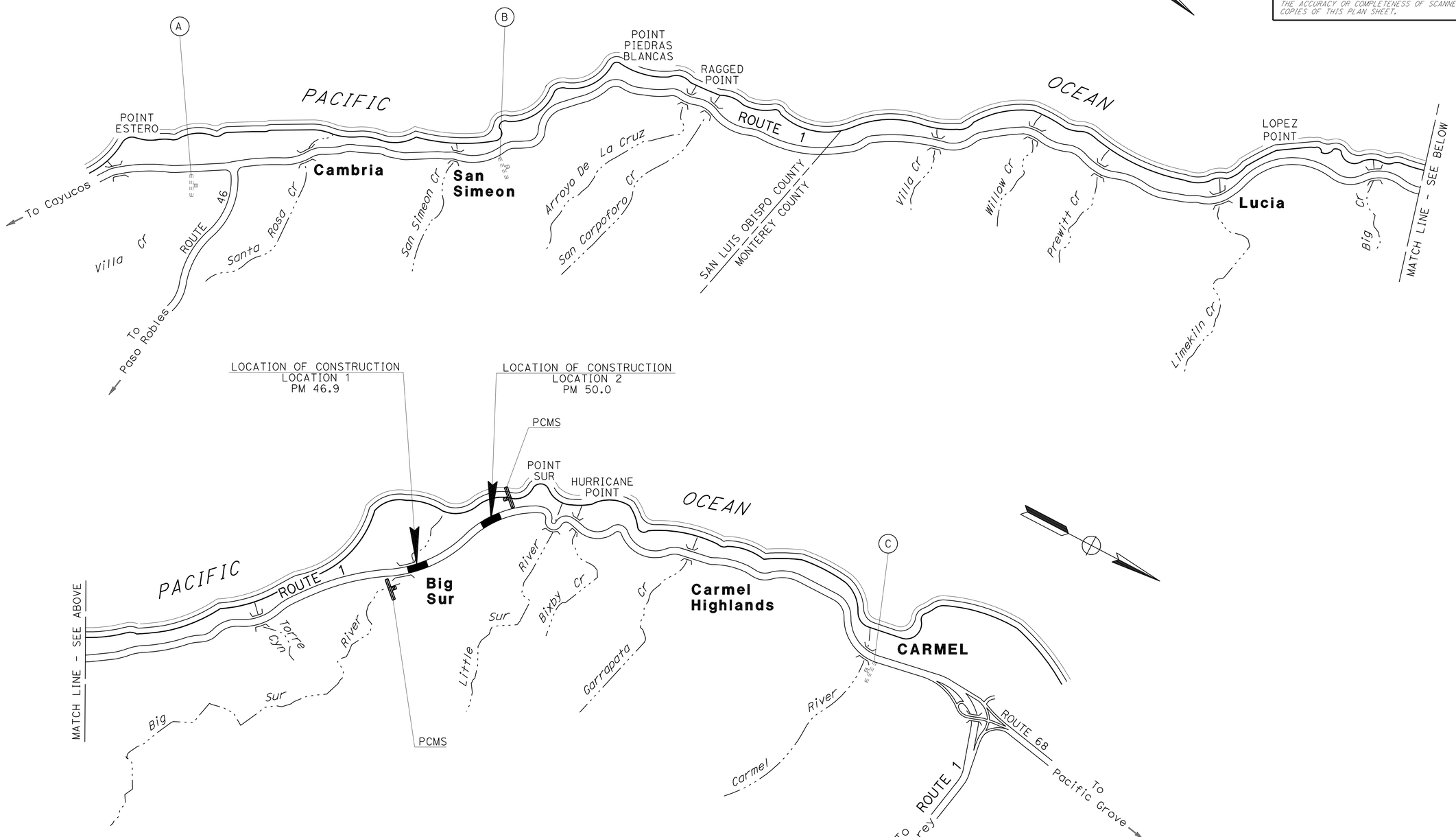

THIS PLAN ACCURATE FOR TRAFFIC HANDLING WORK ONLY.

TRAFFIC HANDLING PLAN

NO SCALE

TH-1

REVISED BY	DATE REVISED

RAY RIAHI	JO ANNE G ENGELMANN
CALCULATED-DESIGNED BY	CHECKED BY
FUNCTIONAL SUPERVISOR	JOHN FOUCHE

STATE OF CALIFORNIA - DEPARTMENT OF TRANSPORTATION

Caltrans

DESIGN

LAST REVISION 11-03-09 | DATE PLOTTED => 12-DEC-2009 | TIME PLOTTED => 07:07

Dist	COUNTY	ROUTE	POST MILES TOTAL PROJECT	SHEET No.	TOTAL SHEETS
05	Mon	1	46.9, 50.0	10	18

J. Engelmann 11-03-09
REGISTERED CIVIL ENGINEER DATE

12-7-09
PLANS APPROVAL DATE

REGISTERED PROFESSIONAL ENGINEER J. G. ENGELMANN No. 60098 Exp 6-30-10 CIVIL STATE OF CALIFORNIA

THE STATE OF CALIFORNIA OR ITS OFFICERS OR AGENTS SHALL NOT BE RESPONSIBLE FOR THE ACCURACY OR COMPLETENESS OF SCANNED COPIES OF THIS PLAN SHEET.

NOTE:

(N) = NOT A SEPARATE PAY ITEM, FOR INFORMATION ONLY.

ROADWAY QUANTITIES

PLAN SHEET No.	STATION	ROADWAY EXCAVATION	ROADWAY EMBANKMENT (N)	WETLAND SOIL	MINOR HOT MIX ASPHALT	CLASS 2 AGGREGATE BASE	DESCRIPTION
		CY	CY	CY	TON	CY	
L-1	"CL1" 101+62 TO 102+45	128	1.0	4.7			CONTOUR GRADING & GRADED GUTTER
L-2	"CL2" 100+00 TO 103+60	242	3.5		33	60	CONTOUR GRADING & Shld CONSTRUCTION
	TOTAL	370	4.5	4.7	33	60	

HORIZONTAL DRAIN QUANTITIES

SYSTEM No.	PLAN SHEET No.	STATION	DRILL HOLE (HORIZONTAL DRAIN)	FURNISH AND INSTALL DRAIN PIPE (HORIZONTAL DRAIN)	TEE (N)	NIPPLE (N)	2" GSP (N)
			LF	LF	EA	EA	EA
1	L-1	"CL1" 101+80	300	300	10	5	15
2	L-1	"CL1" 101+84	300	300	10	5	100
3	L-2	"CL2" 100+95	300	300	10	5	15
4	L-2	"CL2" 101+50	300	300	10	5	15
5	L-2	"CL2" 102+15	300	300	10	5	15
6	L-2	"CL2" 102+70	300	300	10	5	15
		TOTAL	1800	1800	60	30	175

WATER POLLUTION CONTROL QUANTITIES

STATION	TEMPORARY DRAINAGE INLET PROTECTION	TEMPORARY CHECK DAM	DESCRIPTION
	EA	LF	
"CL1" 101+77 TO 102+45		120	GRADED GUTTER
"CL1" 102+44.43, 14.18 Rt	1		Exist DI
TOTAL	1	120	

EROSION CONTROL

STATION	EROSION CONTROL (TYPE 1) FIBER ROLL	EROSION CONTROL (TYPE 1) EROSION CONTROL (COMPOST BLANKET)	SEED (N)	COMMENTS
	LF	CY	LB	
"CL1" 101+60 TO 102+00	140	4.3	1.3	INCLUDES EMBANKMENT AND EXCAVATION SLOPES AND OTHER AREAS DISTURBED BY CONSTRUCTION ACTIVITIES.
"CL2" 100+10 TO 103+50	720	7.7	2.3	
TOTAL	860	12.0	3.6	

PAVEMENT DELINEATION QUANTITIES

Loc	STATION	DETAIL No.	THERMOPLASTIC TRAFFIC STRIPE (SPRAYABLE) 4" YELLOW	4" WHITE	4" YELLOW (BROKEN 17-7)	PAVEMENT MARKER (RETROREFLECTIVE) TYPE D	TYPE H
			LF			EA	
1	"CL1" 101+00 TO 102+50	22	150			14	
		27B		300			
2	"CL2" 99+50 TO 102+20	22	270			26	
		27B		540			
	"CL2" 102+20 TO 104+00	16			180	5	13
		27B		360			
	SUBTOTAL		420	1200	180	45	13
	TOTAL		1800			58	

SUMMARY OF QUANTITIES
Q-1

STATE OF CALIFORNIA - DEPARTMENT OF TRANSPORTATION
Caltrans DESIGN
FUNCTIONAL SUPERVISOR JOHN FOUCHE
CALCULATED-DESIGNED BY JO ANNE G ENGELMANN
CHECKED BY RAY RIAHI
REVISED BY
DATE REVISED

LAST REVISION 11-03-09
DATE PLOTTED => 12-DEC-2009
TIME PLOTTED => 07:07

DIST	COUNTY	ROUTE	POST MILES TOTAL PROJECT	SHEET NO.	TOTAL SHEETS
05	Mon	1	46.9,50.0	11	18

Gregory A. Balzer
LICENSED LANDSCAPE ARCHITECT

April 3, 2009
PLANS APPROVAL DATE

LICENSED LANDSCAPE ARCHITECT
Gregory A. Balzer 2516
Signature
02-28-11
Renewal Date
03-04-09
Date
STATE OF CALIFORNIA

The State of California or its officers or agents shall not be responsible for the accuracy or completeness of electronic copies of this plan sheet.

To accompany plans dated 12-7-09

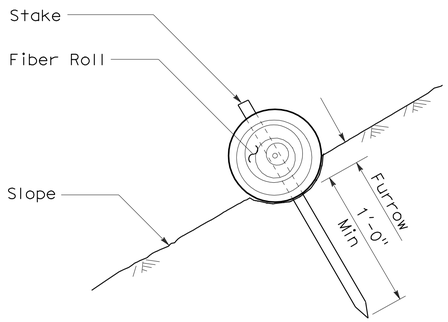

SECTION

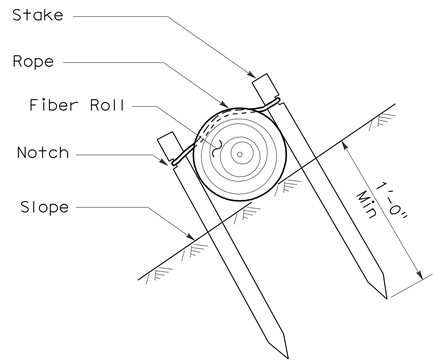

SECTION

FIBER ROLL
(TYPE 1)

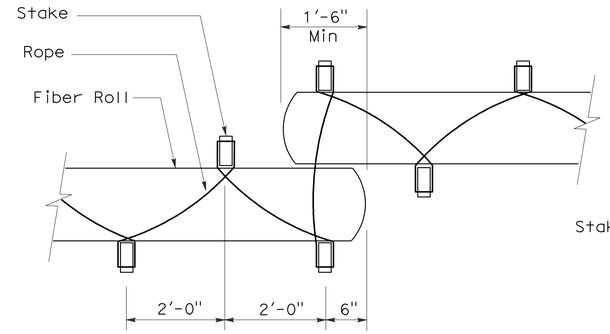

PLAN

FIBER ROLL
(TYPE 2)

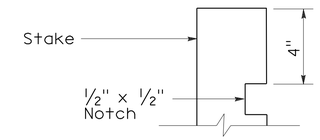

ELEVATION

STAKE NOTCH DETAIL

NOTES:

1. Fiber roll spacing varies depending upon slope inclination.
2. Installations shown in the perspectives are for slope inclination of 10:1 and steeper.

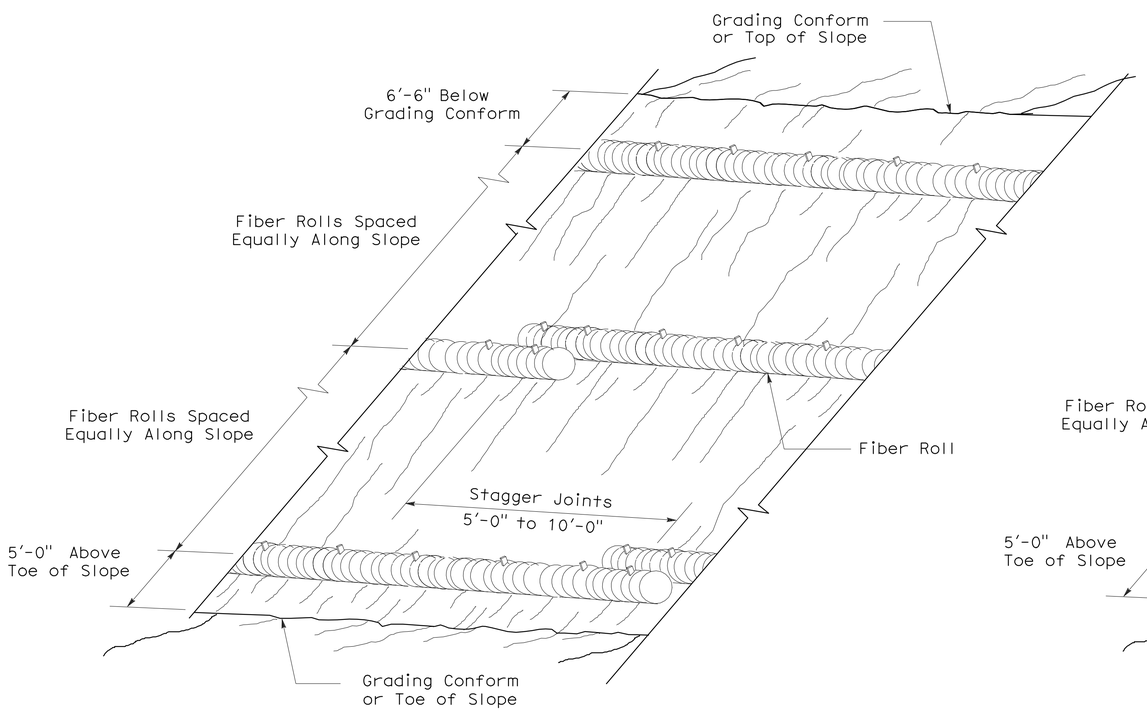

PERSPECTIVE

FIBER ROLL (TYPE 1)

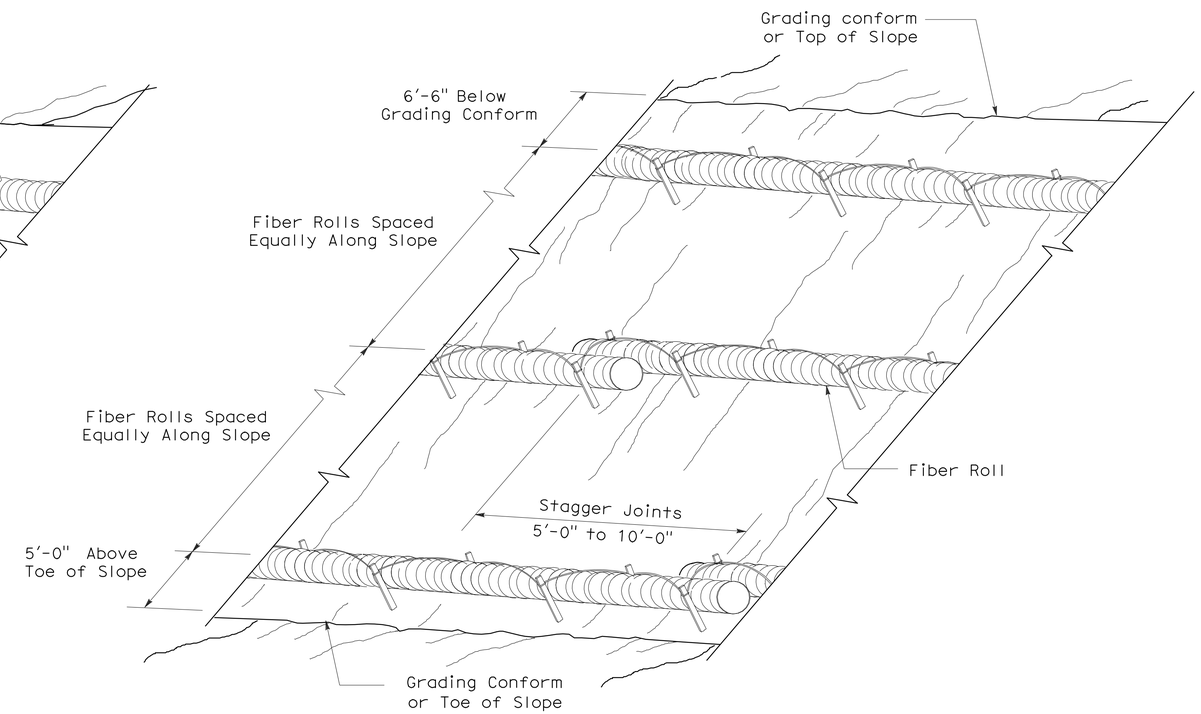

PERSPECTIVE

FIBER ROLL (TYPE 2)

STATE OF CALIFORNIA
DEPARTMENT OF TRANSPORTATION

EROSION CONTROL DETAILS (FIBER ROLL)

NO SCALE

RNSP H51 DATED APRIL 3, 2009 SUPERSEDES NSP H51 DATED DECEMBER 1, 2006 THAT SUPPLEMENTS THE STANDARD PLANS BOOK DATED MAY 2006.

REVISED NEW STANDARD PLAN RNSP H51

2006 REVISED NEW STANDARD PLAN RNSP H51

3-4-09

DIST	COUNTY	ROUTE	POST MILES TOTAL PROJECT	SHEET NO.	TOTAL SHEETS
05	Mon	1	46.9,50.0	12	18

Randell D. Hiatt
REGISTERED CIVIL ENGINEER

June 6, 2008
PLANS APPROVAL DATE

REGISTERED PROFESSIONAL ENGINEER
Randell D. Hiatt
No. C50200
Exp. 6-30-09
CIVIL
STATE OF CALIFORNIA

The State of California or its officers or agents shall not be responsible for the accuracy or completeness of electronic copies of this plan sheet.

To accompany plans dated 12-7-09

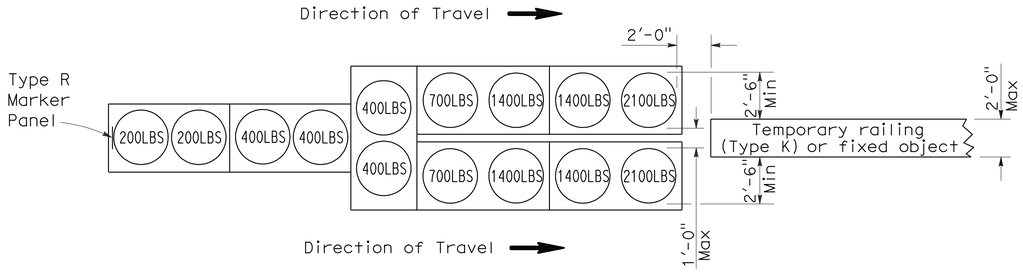

ARRAY 'TU14'

Approach speed 45 mph or more

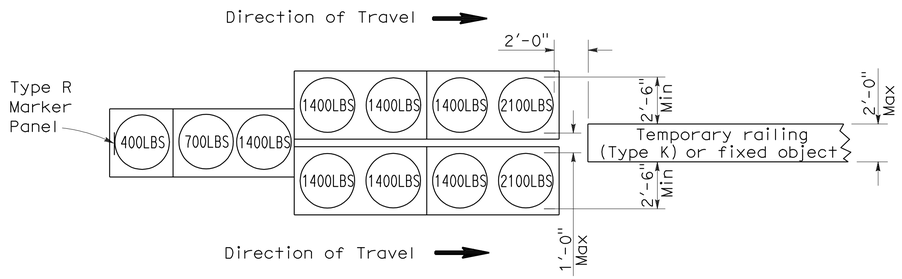

ARRAY 'TU11'

Approach speed less than 45 mph

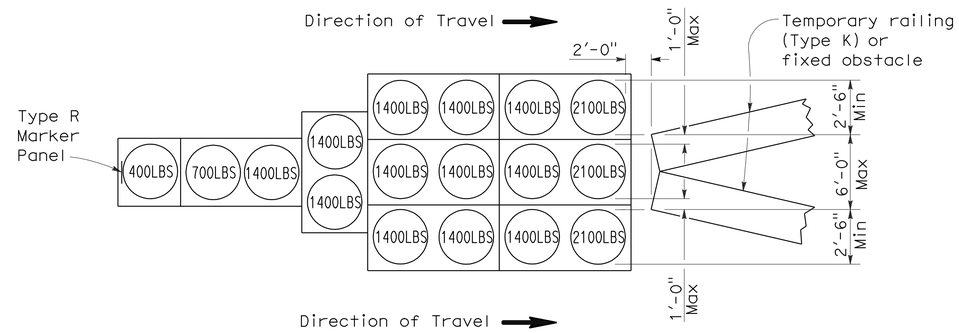

ARRAY 'TU17'

Approach speed less than 45 mph

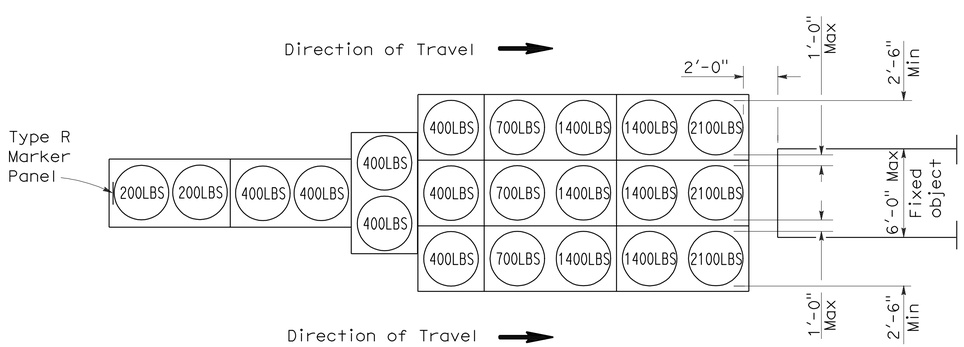

ARRAY 'TU21'

Approach speed 45 mph or more

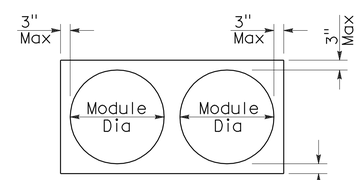

PLAN

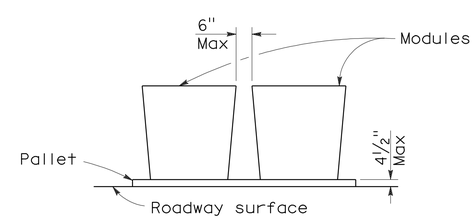

ELEVATION

CRASH CUSHION PALLET DETAIL

See Note 7

NOTES:

1. (XXX) Indicates sand filled module location and weight of sand in pounds for each module. Module spacing is based on the greater diameter of the module.
2. All sand weights are nominal.
3. Temporary crash cushion arrays shall not encroach on the traveled way.
4. Place the top of Type R marker panel 1" below the module lid.
5. Refer to Standard Plan A73B for marker details.
6. Approach speeds indicated conform to NCHRP 350 Report criteria.
7. Use of pallets is optional.

STATE OF CALIFORNIA
DEPARTMENT OF TRANSPORTATION

TEMPORARY CRASH CUSHION, SAND FILLED (UNIDIRECTIONAL)

NO SCALE

RSP T1A DATED JUNE 6, 2008 SUPERSEDES STANDARD PLAN T1A
DATED MAY 1, 2006 - PAGE 211 OF THE STANDARD PLANS BOOK DATED MAY 2006.

REVISED STANDARD PLAN RSP T1A

2006 REVISED STANDARD PLAN RSP T1A

DIST	COUNTY	ROUTE	POST MILES TOTAL PROJECT	SHEET NO.	TOTAL SHEETS
05	Mon	1	46.9,50.0	13	18

Randell D. Hiatt
REGISTERED CIVIL ENGINEER

June 6, 2008
PLANS APPROVAL DATE

REGISTERED PROFESSIONAL ENGINEER
Randell D. Hiatt
No. C50200
Exp. 6-30-09
CIVIL
STATE OF CALIFORNIA

The State of California or its officers or agents shall not be responsible for the accuracy or completeness of electronic copies of this plan sheet.

To accompany plans dated 12-7-09

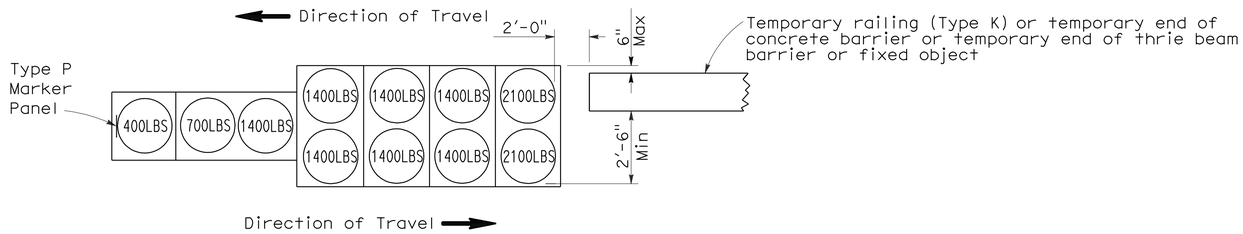

ARRAY 'TB11'

Approach speed less than 45 mph

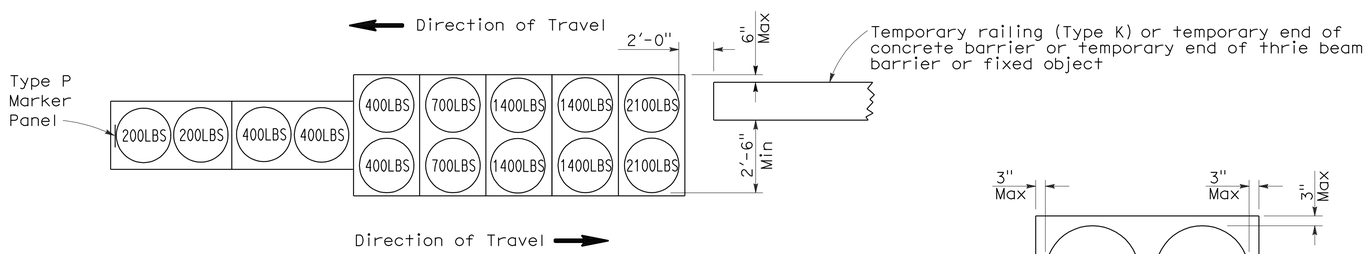

ARRAY 'TB14'

Approach speed 45 mph or more

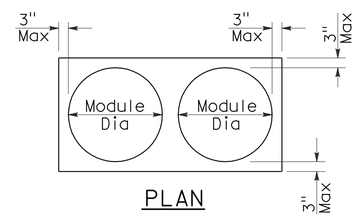

PLAN

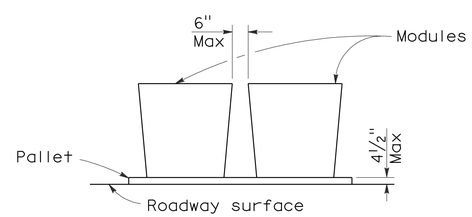

ELEVATION

CRASH CUSHION PALLET DETAIL

See Note 7

NOTES:

1. (XXX) Indicates sand filled module location and weight of sand in pounds for each module. Module spacing is based on the greater diameter of the module.
2. All sand weights are nominal.
3. Temporary crash cushion arrays shall not encroach on the traveled way.
4. Place the Type P marker panel so that the bottom of the panel rests upon the pallet.
5. Refer to Standard Plan A73B for marker details.
6. Approach speeds indicated conform to NCHRP 350 Report criteria.
7. Use of pallets is optional.

STATE OF CALIFORNIA
DEPARTMENT OF TRANSPORTATION

TEMPORARY CRASH CUSHION, SAND FILLED (BIDIRECTIONAL)

NO SCALE

RSP T1B DATED JUNE 6, 2008 SUPERSEDES STANDARD PLAN T1B
DATED MAY 1, 2006 - PAGE 212 OF THE STANDARD PLANS BOOK DATED MAY 2006.

REVISED STANDARD PLAN RSP T1B

2006 REVISED STANDARD PLAN RSP T1B

5-15-08

DIST	COUNTY	ROUTE	POST MILES TOTAL PROJECT	SHEET NO.	TOTAL SHEETS
05	Mon	1	46.9,50.0	14	18

Randell D. Hiatt
REGISTERED CIVIL ENGINEER

June 6, 2008
PLANS APPROVAL DATE

REGISTERED PROFESSIONAL ENGINEER
Randell D. Hiatt
No. C50200
Exp. 6-30-09
CIVIL
STATE OF CALIFORNIA

The State of California or its officers or agents shall not be responsible for the accuracy or completeness of electronic copies of this plan sheet.

To accompany plans dated 12-7-09

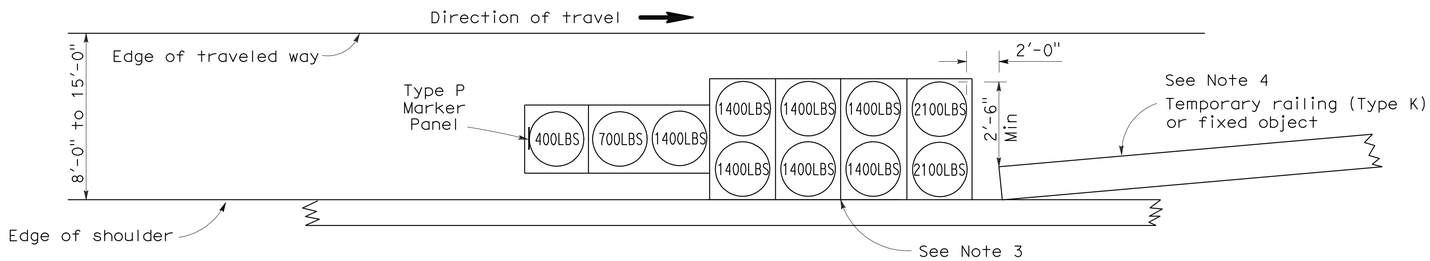

ARRAY 'TS11'

Approach speed less than 45 mph
See Note 9

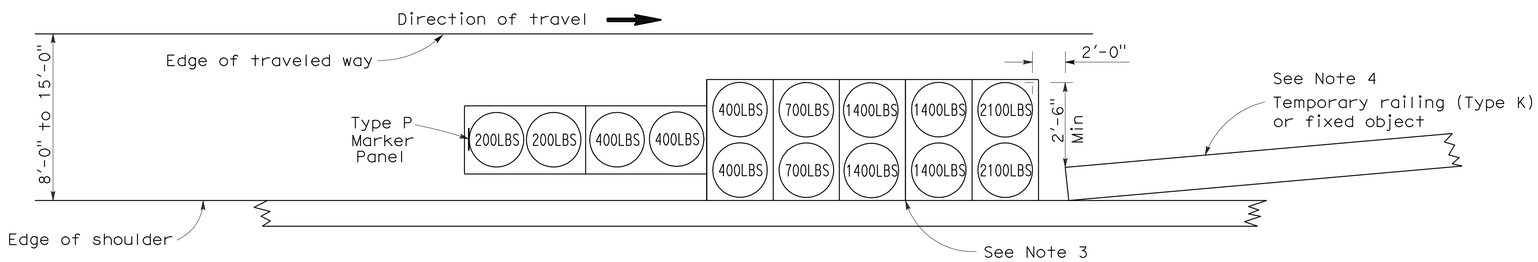

ARRAY 'TS14'

Approach speed 45 mph or more
See Note 9

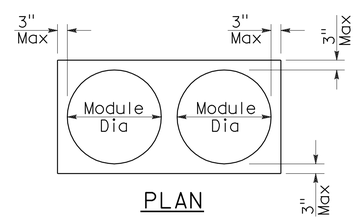

PLAN

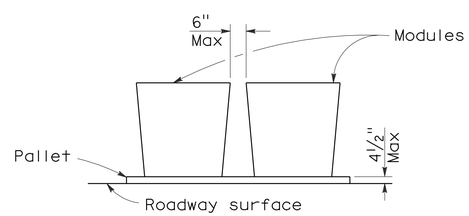

ELEVATION

CRASH CUSHION PALLET DETAIL

See Note 11

NOTES:

1. (XXX) Indicates sand filled module location and weight of sand in pounds for each module. Module spacing is based on the greater diameter of the module.
2. All sand weights are nominal.
3. The temporary crash cushion arrays shown on this plan shall be used only in locations where there will be traffic on one side of the temporary crash cushion array.
4. If the fixed object or approach end of the temporary railing is less than 15'-0" from the edge of traveled way, a temporary crash cushion is required in a construction or work zone.
5. Temporary crash cushion arrays shall not encroach on the traveled way.
6. Arrays for median shoulders shall conform to details shown on this plan for outside shoulders.
7. Place the Type P marker panel so that the bottom of the panel rests upon the pallet and faces traffic.
8. Refer to Standard Plan A73B for marker details.
9. For shoulder widths less than 8'-0", appropriate approved crash cushion protection, other than sand filled modules, shall be provided at fixed objects and at approach ends of temporary railing. The specific type of crash cushion shall be as shown on the project plans or as specified in the Special Provisions, or if not shown on the project plans or specified in the Special Provisions, shall be as approved by the Engineer.
10. Approach speeds indicated conform to NCHRP 350 Report criteria.
11. Use of pallets is optional.

STATE OF CALIFORNIA
DEPARTMENT OF TRANSPORTATION

TEMPORARY CRASH CUSHION, SAND FILLED (SHOULDER INSTALLATIONS)

NO SCALE

RSP T2 DATED JUNE 6, 2008 SUPERSEDES STANDARD PLAN T2
DATED MAY 1, 2006 - PAGE 213 OF THE STANDARD PLANS BOOK DATED MAY 2006.

REVISED STANDARD PLAN RSP T2

2006 REVISED STANDARD PLAN RSP T2

5-15-08

DIST	COUNTY	ROUTE	POST MILES TOTAL PROJECT	SHEET NO.	TOTAL SHEETS
05	Mon	1	46.9,50.0	15	18

Robert B Schott
LICENSED LANDSCAPE ARCHITECT

August 15, 2008
PLANS Approval DATE

LICENSED LANDSCAPE ARCHITECT
Robert B. Schott 3625
Robert B Schott
Signature
11-04-08
Renewal Date
08-11-08
Date
STATE OF CALIFORNIA

The State of California or its officers or agents shall not be responsible for the accuracy or completeness of electronic copies of this plan sheet.

To accompany plans dated 12-7-09

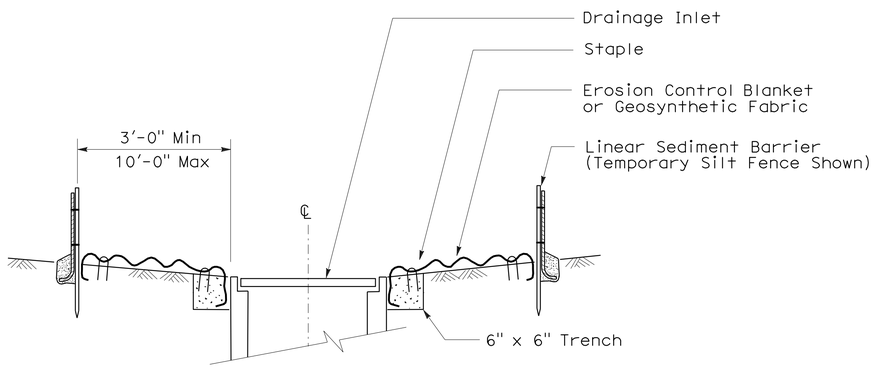

SECTION A-A

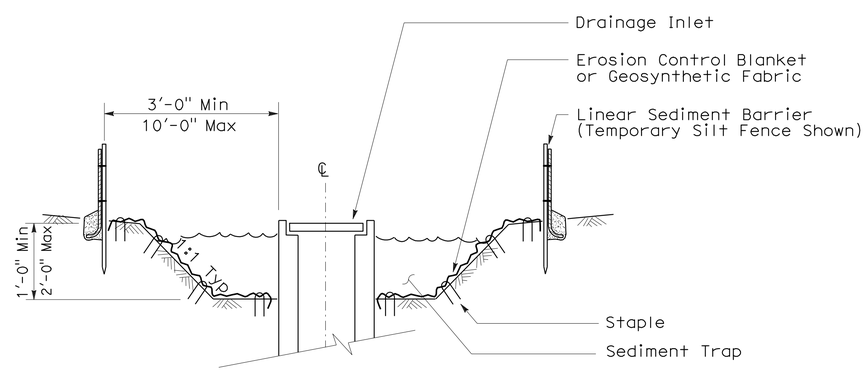

SECTION B-B

NOTES:

1. See Standard Plan T51 for Temporary Silt Fence.
2. Dimensions may vary to fit field conditions.

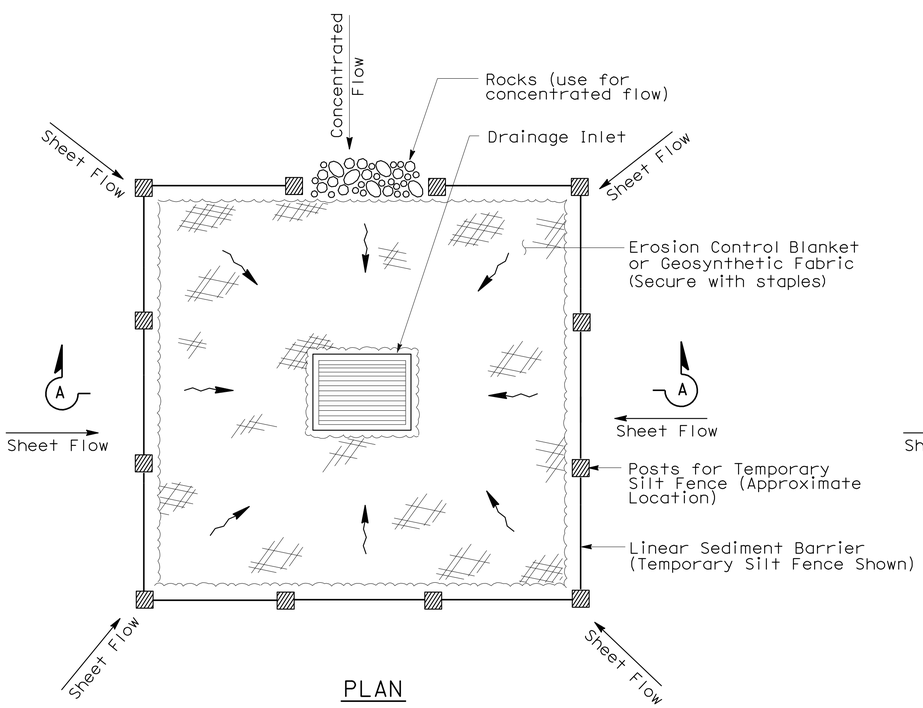

PLAN

TEMPORARY DRAINAGE
INLET PROTECTION (TYPE 1)

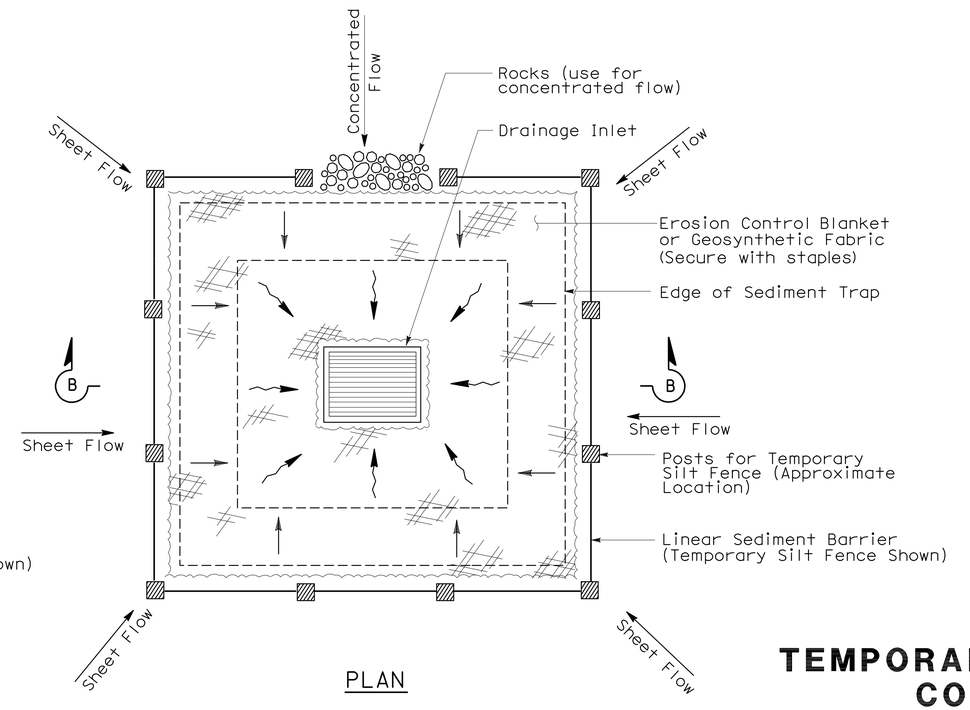

PLAN

TEMPORARY DRAINAGE
INLET PROTECTION (TYPE 2)
(EXCAVATED SEDIMENT TRAP)

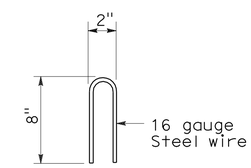

STAPLE DETAIL

STATE OF CALIFORNIA
DEPARTMENT OF TRANSPORTATION

TEMPORARY WATER POLLUTION CONTROL DETAILS (TEMPORARY DRAINAGE INLET PROTECTION)

NO SCALE

NSP T61 DATED AUGUST 15, 2008 SUPPLEMENTS
THE STANDARD PLANS BOOK DATED MAY 2006.

NEW STANDARD PLAN NSP T61

2006 NEW STANDARD PLAN NSP T61

7-11-08

DIST	COUNTY	ROUTE	POST MILES TOTAL PROJECT	SHEET NO.	TOTAL SHEETS
05	Mon	1	46.9,50.0	16	18

LICENSED LANDSCAPE ARCHITECT

August 15, 2008
PLANS APPROVAL DATE

The State of California or its officers or agents shall not be responsible for the accuracy or completeness of electronic copies of this plan sheet.

LICENSED LANDSCAPE ARCHITECT — Robert B. Schott — Signature — 11-04-08 Renewal Date — 08-11-08 Date — STATE OF CALIFORNIA

To accompany plans dated 12-7-09

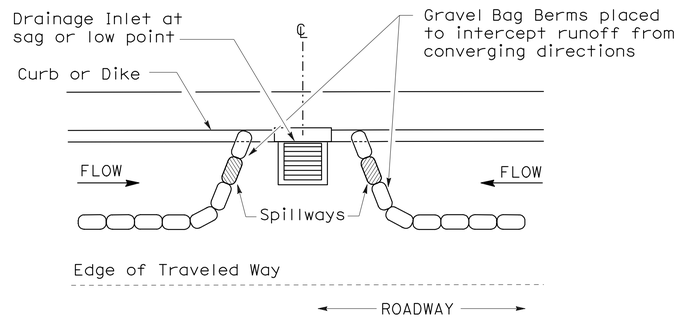

PLAN

CONFIGURATION FOR SAG POINT INLET (GRAVEL BAG BERM)

GRAVEL BAG BERM (TYPE 3A) SPACING TABLE

SLOPE OF ROADWAY (PERCENT)	1 to 3.9	4 to 5.9	6 to 7.9	8 to 10	10+
INTERVAL BETWEEN BERM	100′	75′	50′	25′	12′

For slope of less than 1%, install barriers only if erosion/sediment is prevalent

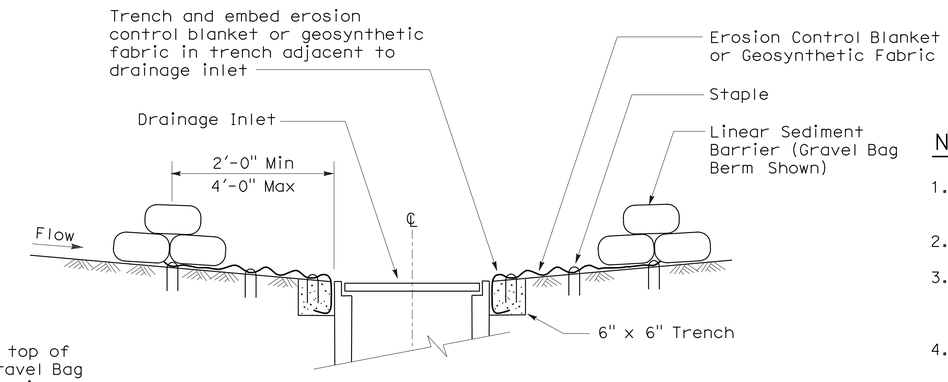

SECTION A-A

NOTES:

1. Place safety cones adjacent to drainage inlet protection.
2. Dimensions may vary to fit field conditions.
3. Install a minimum of 3 gravel bag berms upstream of each drainage inlet to be protected.
4. Position erosion control blanket or geosynthetic fabric at edge of concrete apron and secure in trench.
5. Erosion control blanket or geosynthetic fabric is not required if the area adjacent to the drainage inlet is vegetated or paved.

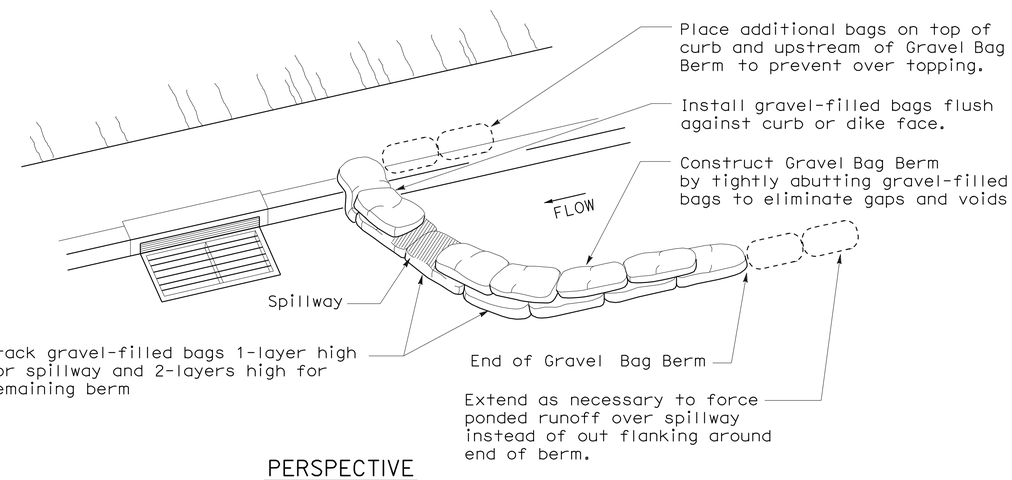

PERSPECTIVE

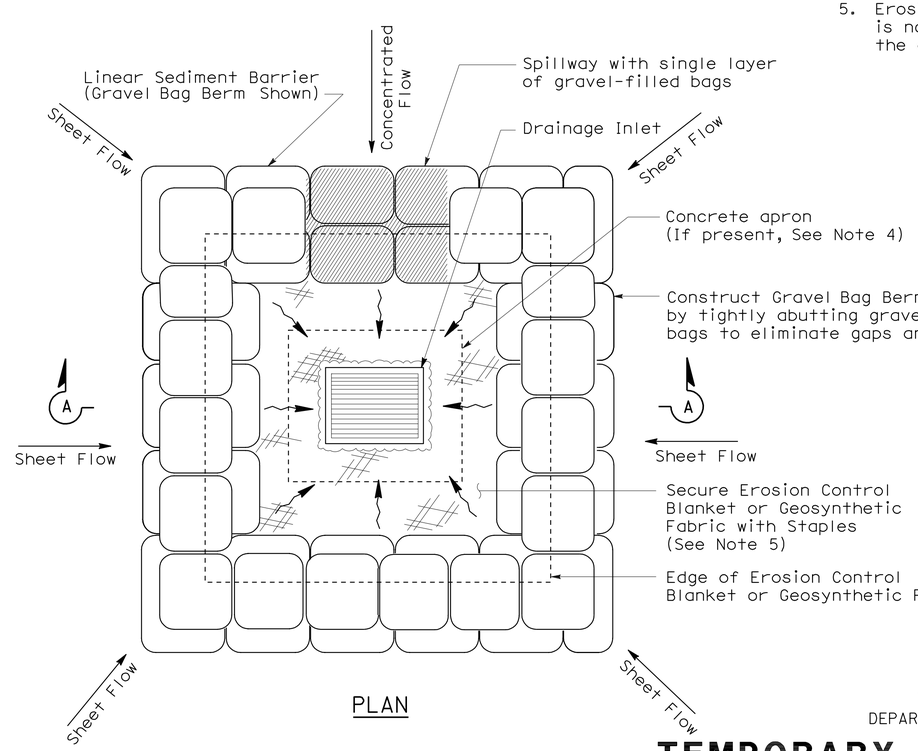

PLAN

TEMPORARY DRAINAGE INLET PROTECTION (TYPE 3B)

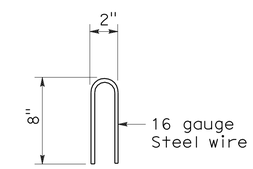

STAPLE DETAIL

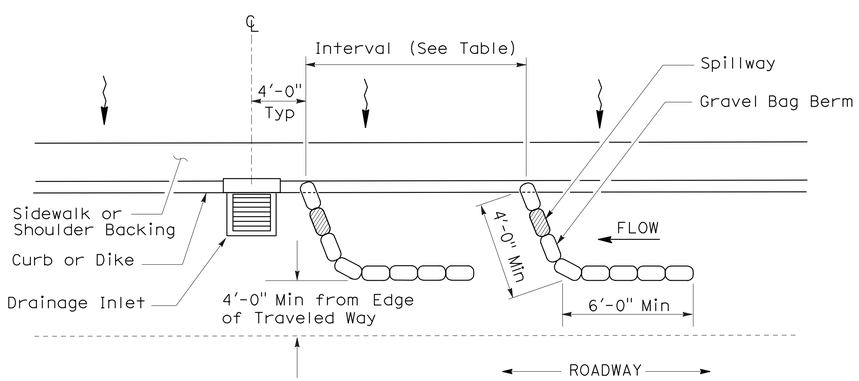

PLAN

TEMPORARY DRAINAGE INLET PROTECTION (TYPE 3A) (GRAVEL BAG BERM)

STATE OF CALIFORNIA
DEPARTMENT OF TRANSPORTATION

TEMPORARY WATER POLLUTION CONTROL DETAILS (TEMPORARY DRAINAGE INLET PROTECTION)

NO SCALE

NSP T62 DATED AUGUST 15, 2008 SUPPLEMENTS THE STANDARD PLANS BOOK DATED MAY 2006.

NEW STANDARD PLAN NSP T62

2006 NEW STANDARD PLAN NSP T62

7-11-08

DIST	COUNTY	ROUTE	POST MILES TOTAL PROJECT	SHEET NO.	TOTAL SHEETS
05	Mon	1	46.9,50.0	17	18

LICENSED LANDSCAPE ARCHITECT

August 15, 2008
PLANS APPROVAL DATE

The State of California or its officers or agents shall not be responsible for the accuracy or completeness of electronic copies of this plan sheet.

LICENSED LANDSCAPE ARCHITECT — Robert B. Schott — Signature — 11-04-08 Renewal Date — 08-11-08 Date — STATE OF CALIFORNIA

To accompany plans dated 12-7-09

FLEXIBLE SEDIMENT BARRIER SPACING TABLE

SLOPE OF ROADWAY (PERCENT)	0 to 0.9	1 to 1.9	2 to 2.9	3 to 4	5+
INTERVAL BETWEEN BARRIERS	50′	35′	30′	25′	20′
ANGLE FROM FACE OF CURB	70°	70°	70°	45°	45°
SUGGESTED BARRIER LENGTH	6′	6′	6′	6′	6′

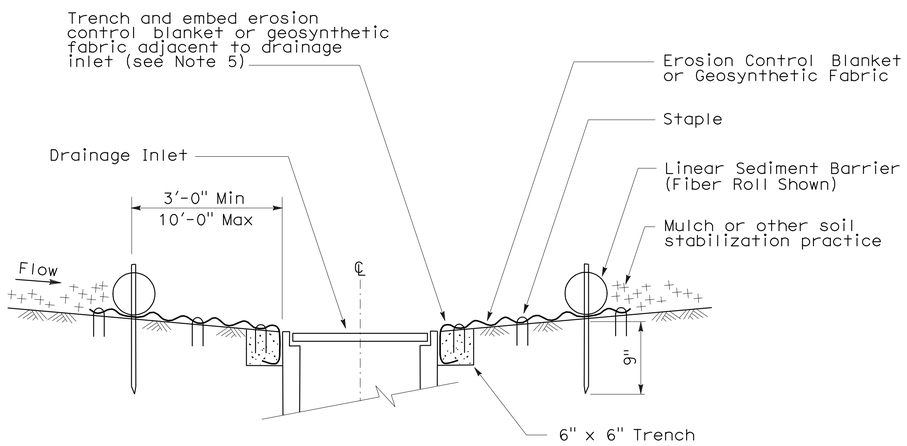

SECTION A-A

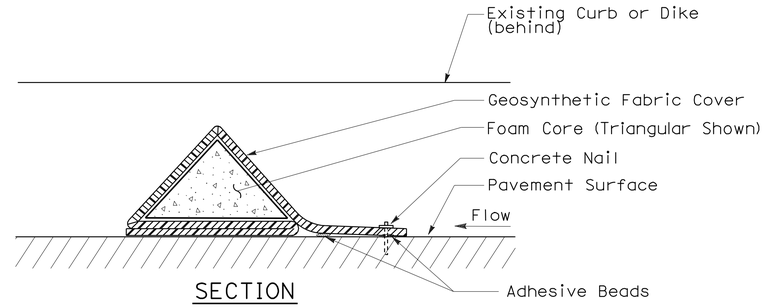

SECTION

FLEXIBLE SEDIMENT BARRIER DETAIL (FOAM BARRIER SHOWN)

NOTES:

1. See Standard Plan T51 for Temporary Silt Fence.
2. Dimensions may vary to fit field conditions.
3. Install a minimum of 3 flexible sediment barriers upstream of each drainage inlet to be protected.
4. Position erosion control blanket or geosynthetic fabric at edge of concrete apron and secure in trench.
5. Erosion control blanket or geosynthetic fabric is not required if the area adjacent to the drainage inlet is vegetated.

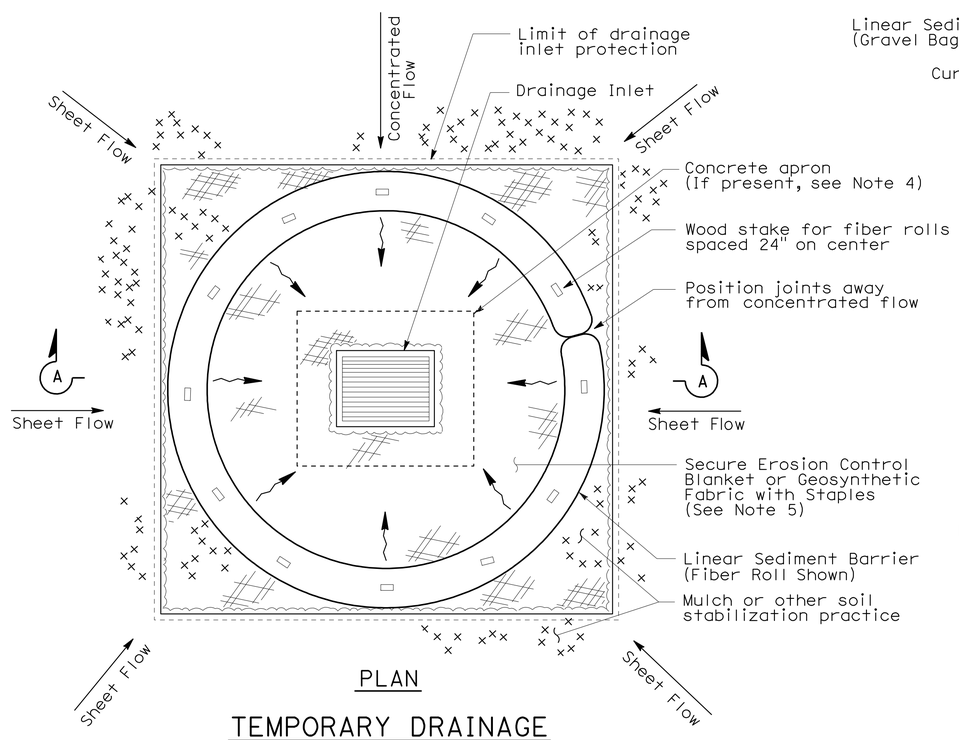

PLAN

TEMPORARY DRAINAGE INLET PROTECTION (TYPE 4A)

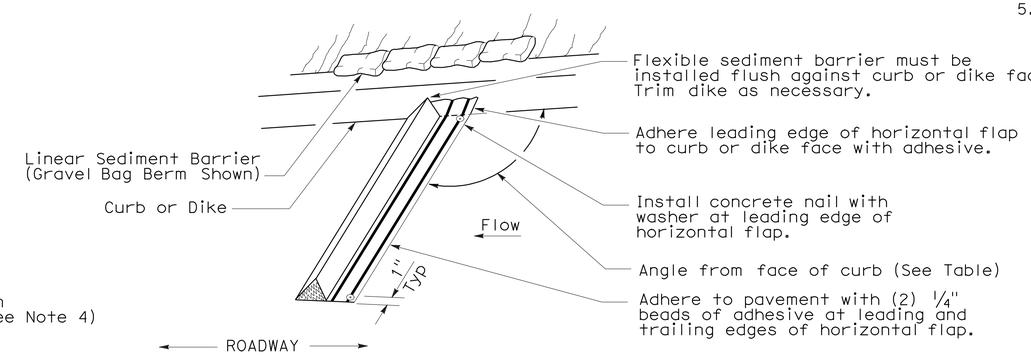

PERSPECTIVE

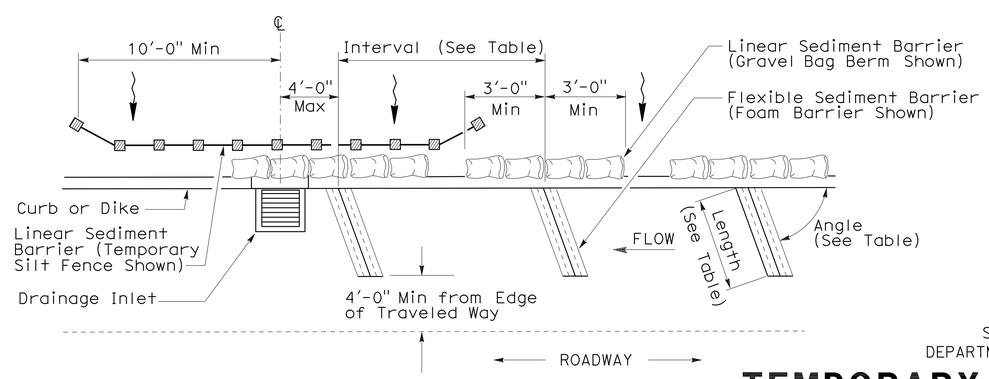

PLAN

TEMPORARY DRAINAGE INLET PROTECTION (TYPE 4B) FLEXIBLE SEDIMENT BARRIER

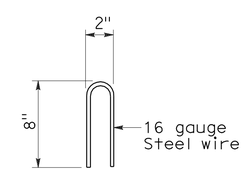

STAPLE DETAIL

STATE OF CALIFORNIA
DEPARTMENT OF TRANSPORTATION

TEMPORARY WATER POLLUTION CONTROL DETAILS (TEMPORARY DRAINAGE INLET PROTECTION)

NO SCALE

NSP T63 DATED AUGUST 15, 2008 SUPPLEMENTS THE STANDARD PLANS BOOK DATED MAY 2006.

NEW STANDARD PLAN NSP T63

2006 NEW STANDARD PLAN NSP T63

7-11-08

DIST	COUNTY	ROUTE	POST MILES TOTAL PROJECT	SHEET NO.	TOTAL SHEETS
05	Mon	1	46.9,50.0	18	18

LICENSED LANDSCAPE ARCHITECT

August 15, 2008
PLANS APPROVAL DATE

LICENSED LANDSCAPE ARCHITECT — Robert B. Schott — Signature — 11-04-08 Renewal Date — 08-11-08 Date — STATE OF CALIFORNIA

The State of California or its officers or agents shall not be responsible for the accuracy or completeness of electronic copies of this plan sheet.

To accompany plans dated 12-7-09

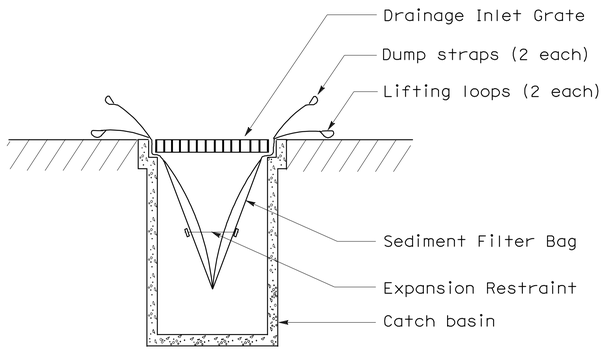

SECTION B-B

SEDIMENT FILTER BAG DETAIL

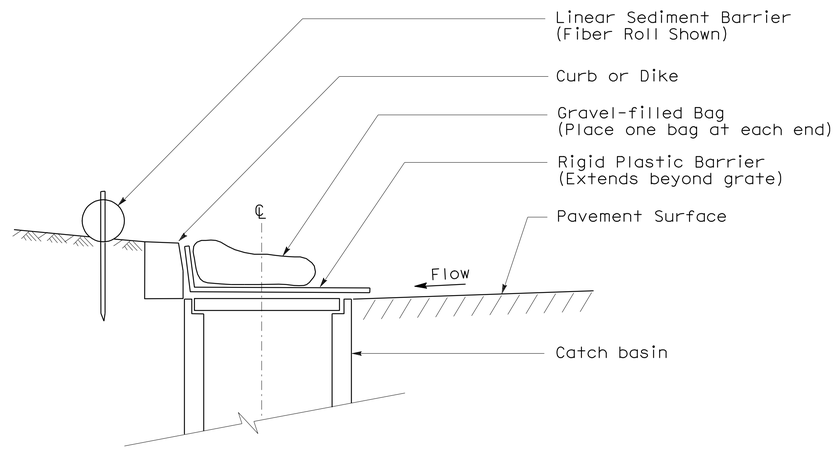

SECTION

TEMPORARY DRAINAGE INLET PROTECTION (TYPE 6A) (CATCH BASIN WITH GRATE)

NOTES:

1. See Standard Plan T51 for Temporary Silt Fence.
2. Dimensions may vary to fit field conditions.

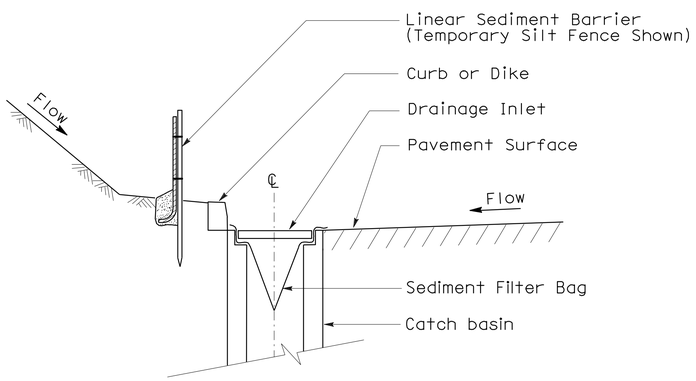

SECTION A-A

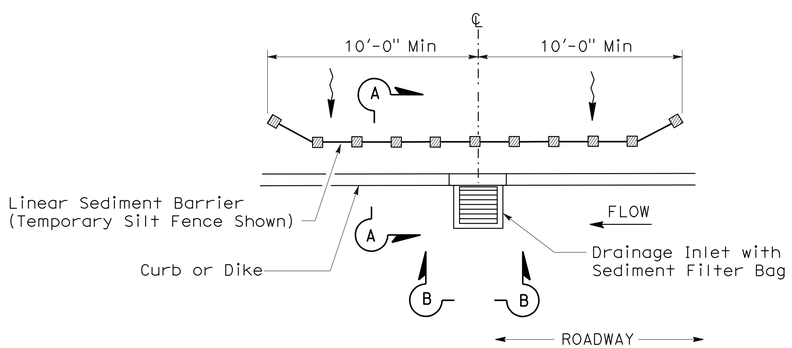

PLAN

TEMPORARY DRAINAGE INLET PROTECTION (TYPE 5) (SEDIMENT FILTER BAG)

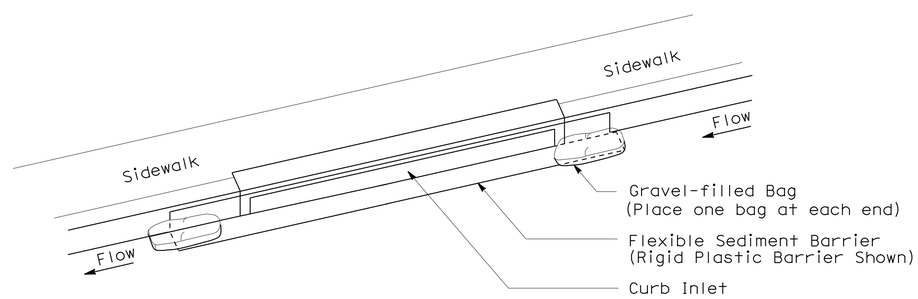

PERSPECTIVE

TEMPORARY DRAINAGE INLET PROTECTION (TYPE 6B) (CURB INLET WITHOUT GRATE)

STATE OF CALIFORNIA
DEPARTMENT OF TRANSPORTATION

TEMPORARY WATER POLLUTION CONTROL DETAILS (TEMPORARY DRAINAGE INLET PROTECTION)

NO SCALE

NSP T64 DATED AUGUST 15, 2008 SUPPLEMENTS
THE STANDARD PLANS BOOK DATED MAY 2006.

NEW STANDARD PLAN NSP T64

2006 NEW STANDARD PLAN NSP T64

7-11-08