DIST	COUNTY	ROUTE	POST MILES TOTAL PROJECT	SHEET No	TOTAL SHEETS
05	SLO	101	R34.2/R34.5	36	55

David P. Murray 10/27/10
REGISTERED CIVIL ENGINEER DATE

1-31-11
PLANS APPROVAL DATE

REGISTERED PROFESSIONAL ENGINEER David P. Murray No. C71259 Exp. 12-31-10 CIVIL STATE OF CALIFORNIA

The State of California or its officers or agents shall not be responsible for the accuracy or completeness of electronic copies of this plan sheet.

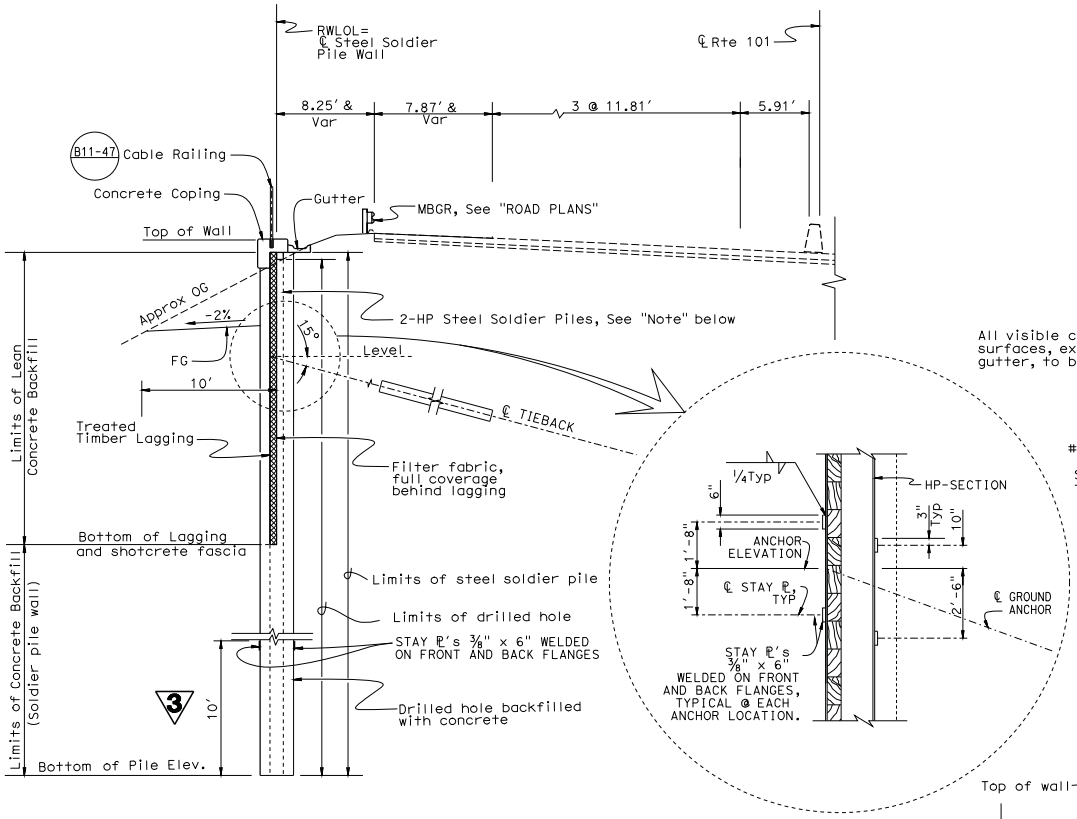

TYPICAL SECTION 2
1/4" = 1'

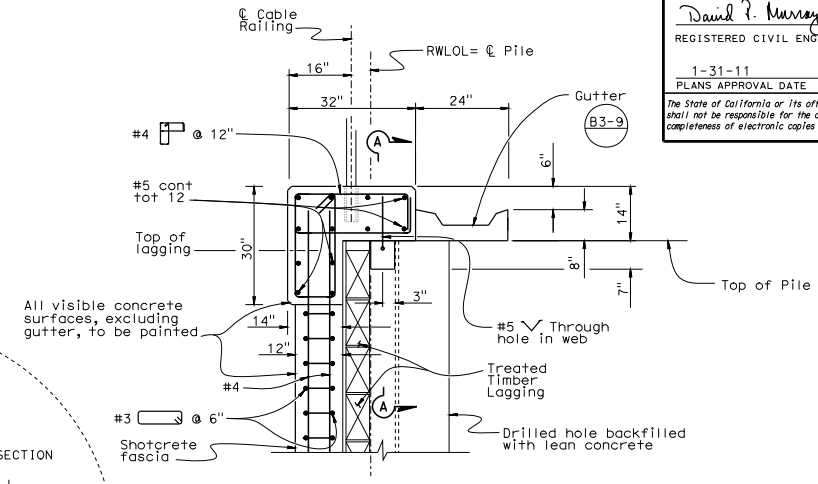

CONCRETE COPING DETAIL AT PILE
3/4" = 1'

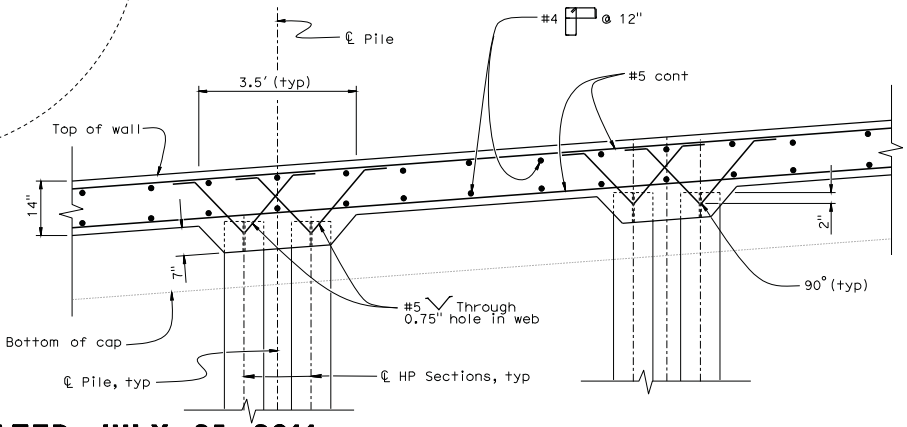

SECTION A -A
3/4" = 1'

Note:
Piles 109, 110, and 111 are 1-HP Steel Soldier Piles without tieback. See "TABLE NO. 2"

3 **REVISED PER ADDENDUM No. 3 DATED JULY 25, 2011**

2 **REVISED PER ADDENDUM No. 2 DATED JULY 21, 2011**

DESIGN	BY DAVID P MURRAY	CHECKED RUPERD WILSON	STATE OF CALIFORNIA DEPARTMENT OF TRANSPORTATION	DIVISION OF ENGINEERING SERVICES STRUCTURE DESIGN DESIGN BRANCH 18	BRIDGE NO. 49E0017
DETAILS	BY JINLI GUO	CHECKED DAVID P MURRAY			POST MILE R34.2/R34.5
QUANTITIES	BY DAVID P MURRAY	CHECKED RUPERD WILSON			

WEST CUESTA SOLDIER PILE WALL
TYPICAL SECTION

STRUCTURES DESIGN DETAIL SHEET (ENGLISH) (REV. 10/25/05)

ORIGINAL SCALE IN INCHES FOR REDUCED PLANS 0 1 2 3

CU 05
EA 0N8901

DISREGARD PRINTS BEARING EARLIER REVISION DATES

REVISION DATES: 3-21-10, 3-26-10, 3-29-10, 05-26-10, 05-26-10, 06-01-10, 07-29-10, 07-30-10, 10-21-10

SHEET 13 OF 32

FILE => 49-rwall-k-ts.add

USERNAME => s124496 DATE PLOTTED => 25-JUL-2011 TIME PLOTTED => 14:17