Dist	COUNTY	ROUTE	POST MILES TOTAL PROJECT	SHEET No.	TOTAL SHEETS
05	Mon	1	72.4/R101.6	31	51

REGISTERED ELECTRICAL ENGINEER 03-16-09 DATE

5-4-09
PLANS APPROVAL DATE

REGISTERED PROFESSIONAL ENGINEER XAVIER IVANHOE ALFARO No. 17488 Exp. 6/30/09 ELECTRICAL STATE OF CALIFORNIA

THE STATE OF CALIFORNIA OR ITS OFFICERS OR AGENTS SHALL NOT BE RESPONSIBLE FOR THE ACCURACY OR COMPLETENESS OF SCANNED COPIES OF THIS PLAN SHEET.

NOTES: (THIS SHEET ONLY)

1. CCTV POWER CORD.
2. 3-PAIR SIC CABLE. USE 2 PAIR FOR EIA-422 PAN/TILT/ZOOM COMMUNICATION BETWEEN THE CCTV CAMERA AND VIDEO ENCODER. ONE PAIR WILL REMAIN AS A SPARE. COLORS MAY VARY.
3. OCC (OUTDOOR CAT5E CABLE). PLUG INTO THE RJ-45 DATA PORT IN THE CCTV DOME CAMERA ASSEMBLY.
4. RG-59U COAXIAL CABLE: CENTER CONDUCTOR: 20 AWG SOLID COPPER
   BRAID SHIELD: WOVEN COPPER BRAID WITH MINIMIM 80% COVERAGE (ALUMINUM FOIL SHIELDING OR FOIL WRAP IS NOT ACCEPTABLE)
   DIELECTRIC INSULATING MATERIAL: POLYURETHANE OR POLYETHYLENE
   OUTER JACKET: BLACK PVC
5. COAXIAL CABLE SURGE/LIGHTNING PROTECTOR: SURGE HANDLING: 5 kA; IMPEDANCE: 75 Ω
   INSERTION LOSS: <0.1 dB @ 500 MHz, CONNECTORS: TYPE F OR BNC
6. LOAD/CHARGE CONTROLLER.
7. DUPLEX BOX WITH CAT 5E RJ45 JACK WALLPLATE.
8. STATE-FURNISHED AND INSTALLED MATERIAL.
9. DC VOLTAGE CONVERTER:
   INPUT: 12 V(dc)
   OUTPUT: 24 V(dc), 100 W
   OPERATING TEMPERATURE RANGE: -25.5 °C TO +85 °C
10. Min DIMENSIONS 30" W x 24" H x ~~8"~~ 12" D NEMA 4 ENCLOSURE WITH HINGED DOOR, PADLOCK HASP AND INTERIOR PANEL FOR THE EQUIPMENT.

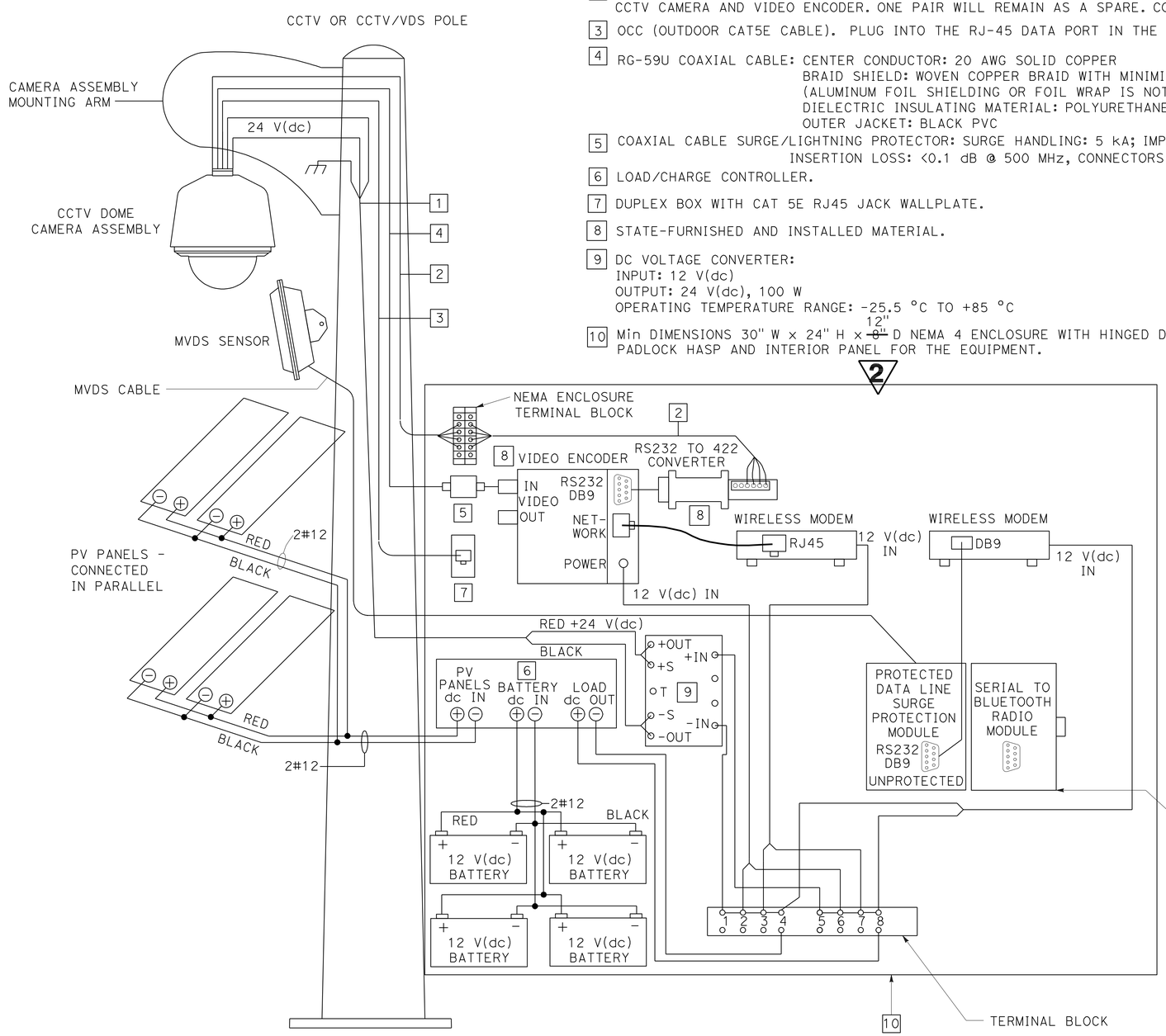

OCC
CAT 5E 10BASE-T
STANDARD PATCH CABLE

PLUG PIN No.		PLUG OR JACK PIN No.
1	ORANGE/WHITE	1
2	ORANGE	2
3	GREEN/WHITE	3
4	BLUE	4
5	BLUE/WHITE	5
6	GREEN	6
7	BROWN/WHITE	7
8	BROWN	8

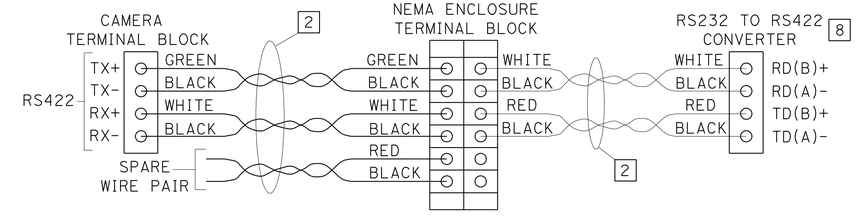

2 OR 3-PAIR RS-422 CABLE CONNECTIONS

DIN-RAIL
T BUS CARRIES POWER AND DATA FROM SURGE PROTECTION MODULE TO SERIAL TO BLUETOOTH MODULE

MVDS, CCTV, PV AND NEMA ENCLOSURE WIRING DETAIL
(Loc 25)

MICROWAVE VEHICLE DETECTION SYSTEM
CLOSED CIRCUIT TELEVISION SYSTEM
(ELECTRICAL DETAILS)

NO SCALE

E-26

2 REVISED PER ADDENDUM No. 2 DATED MARCH 11, 2010

THIS PLAN IS ACCURATE FOR ELECTRICAL WORK ONLY.

STATE OF CALIFORNIA - DEPARTMENT OF TRANSPORTATION
Caltrans® ELECTRICAL DESIGN

FUNCTIONAL SUPERVISOR: ALI BAKHDOUD
CALCULATED-DESIGNED BY: ANHHUY NGUYEN
CHECKED BY: XAVIER ALFARO
REVISED BY
DATE REVISED

LAST REVISION DATE PLOTTED => 11-MAR-2010
TIME PLOTTED => 11:17
03-10-09

Dist	COUNTY	ROUTE	POST MILES TOTAL PROJECT	SHEET No.	TOTAL SHEETS
05	Mon	1	72.4/R101.6	32	51

REGISTERED ELECTRICAL ENGINEER 03-16-09 DATE

5-4-09
PLANS APPROVAL DATE

REGISTERED PROFESSIONAL ENGINEER XAVIER IVANHOE ALFARO No. 17488 Exp. 6/30/09 ELECTRICAL STATE OF CALIFORNIA

THE STATE OF CALIFORNIA OR ITS OFFICERS OR AGENTS SHALL NOT BE RESPONSIBLE FOR THE ACCURACY OR COMPLETENESS OF SCANNED COPIES OF THIS PLAN SHEET.

NOTES: (THIS SHEET ONLY)

1. CCTV POWER CORD.
2. 3-PAIR SIC CABLE. USE 2 PAIR FOR EIA-422 PAN/TILT/ZOOM COMMUNICATION BETWEEN THE CCTV CAMERA AND VIDEO ENCODER. ONE PAIR WILL REMAIN AS A SPARE. COLORS MAY VARY.
3. OCC (OUTDOOR CAT5E CABLE). PLUG INTO THE RJ-45 DATA PORT IN THE CCTV DOME CAMERA ASSEMBLY.
4. RG-59U COAXIAL CABLE: CENTER CONDUCTOR: 20 AWG SOLID COPPER
   BRAID SHIELD: WOVEN COPPER BRAID WITH MINIMIM 80% COVERAGE
   (ALUMINUM FOIL SHIELDING OR FOIL WRAP IS NOT ACCEPTABLE)
   DIELECTRIC INSULATING MATERIAL: POLYURETHANE OR POLYETHYLENE
   OUTER JACKET: BLACK PVC
5. COAXIAL CABLE SURGE/LIGHTNING PROTECTOR: SURGE HANDLING: 5 kA; IMPEDANCE: 75 Ω
   INSERTION LOSS: <0.1 dB @ 500 MHz, CONNECTORS: TYPE F OR BNC
6. LOAD/CHARGE CONTROLLER.
7. ACCESS POINT HAS INTERNAL CELLULAR MODEM WITH ETHERNET ROUTER.
8. DUPLEX BOX WITH CAT 5E RJ45 JACK WALLPLATE.
9. STATE-FURNISHED AND INSTALLED MATERIAL.
10. DC VOLTAGE CONVERTER:
    INPUT: 12 V(dc)
    OUTPUT: 24 V(dc), 100 W
    OPERATING TEMPERATURE RANGE: -25.5 °C TO +85 °C
11. Min DIMENSIONS 30" W x 24" H x ~~8"~~ 12" D NEMA 4 ENCLOSURE WITH HINGED DOOR, PADLOCK HASP AND INTERIOR PANEL FOR THE EQUIPMENT.

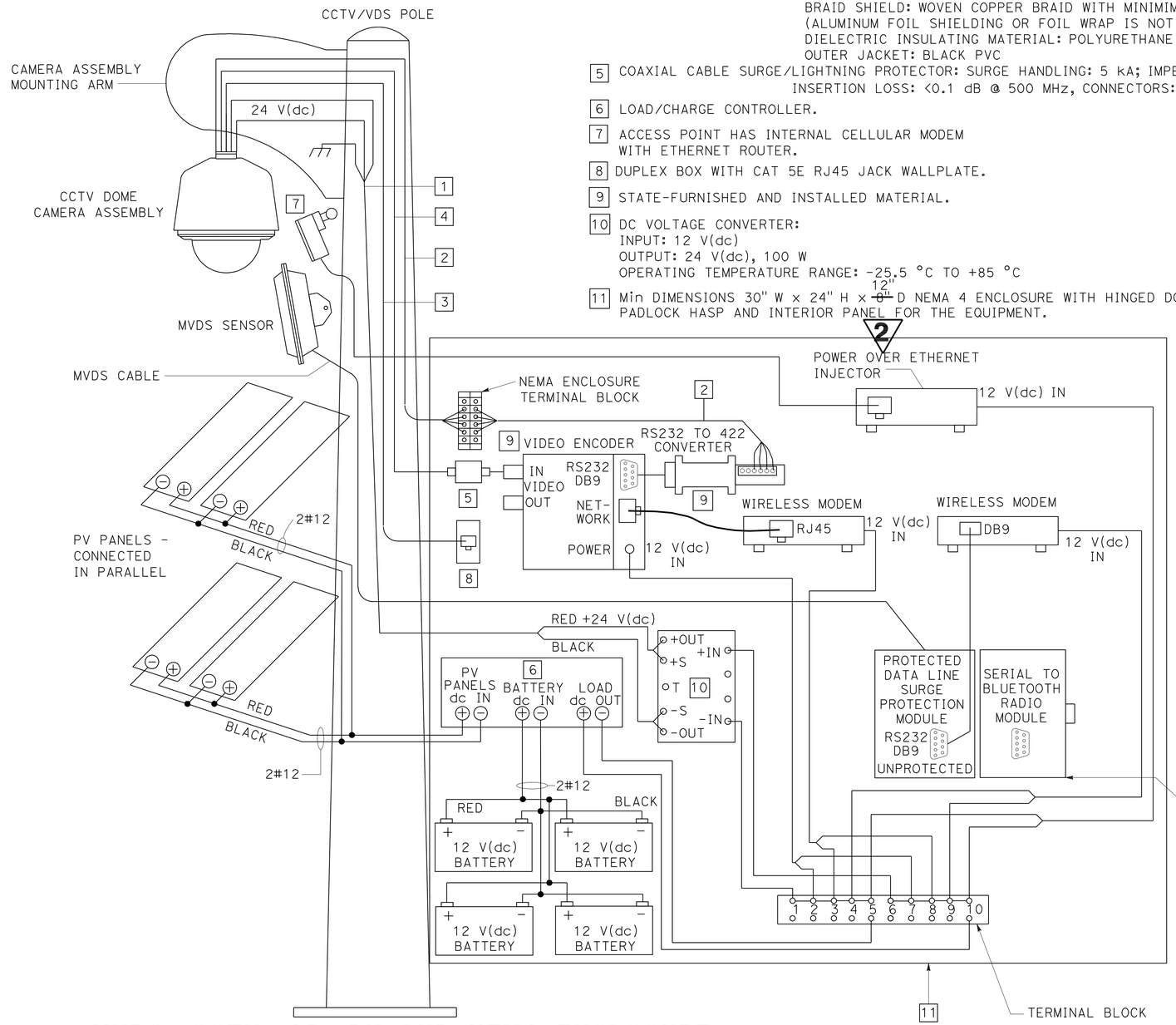

OCC
CAT 5E 10BASE-T
STANDARD PATCH CABLE

PLUG PIN No.		PLUG OR JACK PIN No.
1	ORANGE/WHITE	1
2	ORANGE	2
3	GREEN/WHITE	3
4	BLUE	4
5	BLUE/WHITE	5
6	GREEN	6
7	BROWN/WHITE	7
8	BROWN	8

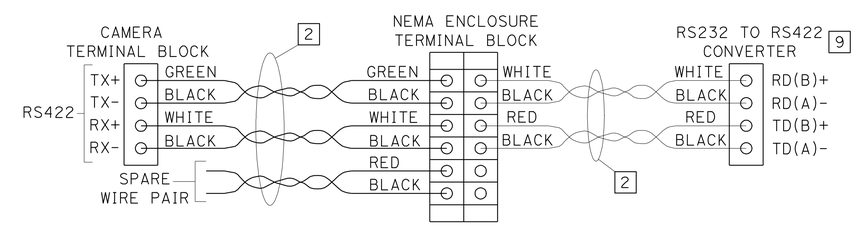

2 OR 3-PAIR RS-422 CABLE CONNECTIONS

MVDS, CCTV, AP, PV AND NEMA ENCLOSURE WIRING DETAIL
(Loc 5, 10, 13, 26, 29, 33)

WIRELESS VEHICLE DETECTION SYSTEM
MICROWAVE VEHICLE DETECTION SYSTEM
CLOSED CIRCUIT TELEVISION SYSTEM
(ELECTRICAL DETAILS)

THIS PLAN IS ACCURATE FOR ELECTRICAL WORK ONLY. **REVISED PER ADDENDUM No. 2 DATED MARCH 11, 2010** NO SCALE

E-27

STATE OF CALIFORNIA - DEPARTMENT OF TRANSPORTATION
Caltrans® ELECTRICAL DESIGN
FUNCTIONAL SUPERVISOR: ALI BAKHDOUD
CALCULATED-DESIGNED BY: XAVIER ALFARO
CHECKED BY: ANHHUY NGUYEN
REVISED BY
DATE REVISED

LAST REVISION 03-13-09 | DATE PLOTTED => 11-MAR-2010 | TIME PLOTTED => 11:18

DIST	COUNTY	ROUTE	POST MILES TOTAL PROJECT	SHEET No	TOTAL SHEETS
05	Mon	1	72.4/R101.6	36	51

REGISTERED CIVIL ENGINEER 2/23/09 DATE

5-4-09
PLANS APPROVAL DATE

REGISTERED PROFESSIONAL ENGINEER ANDREW BUI No. C63560 Exp. 9/30/10 CIVIL STATE OF CALIFORNIA

The State of California or its officers or agents shall not be responsible for the accuracy or completeness of electronic copies of this plan sheet.

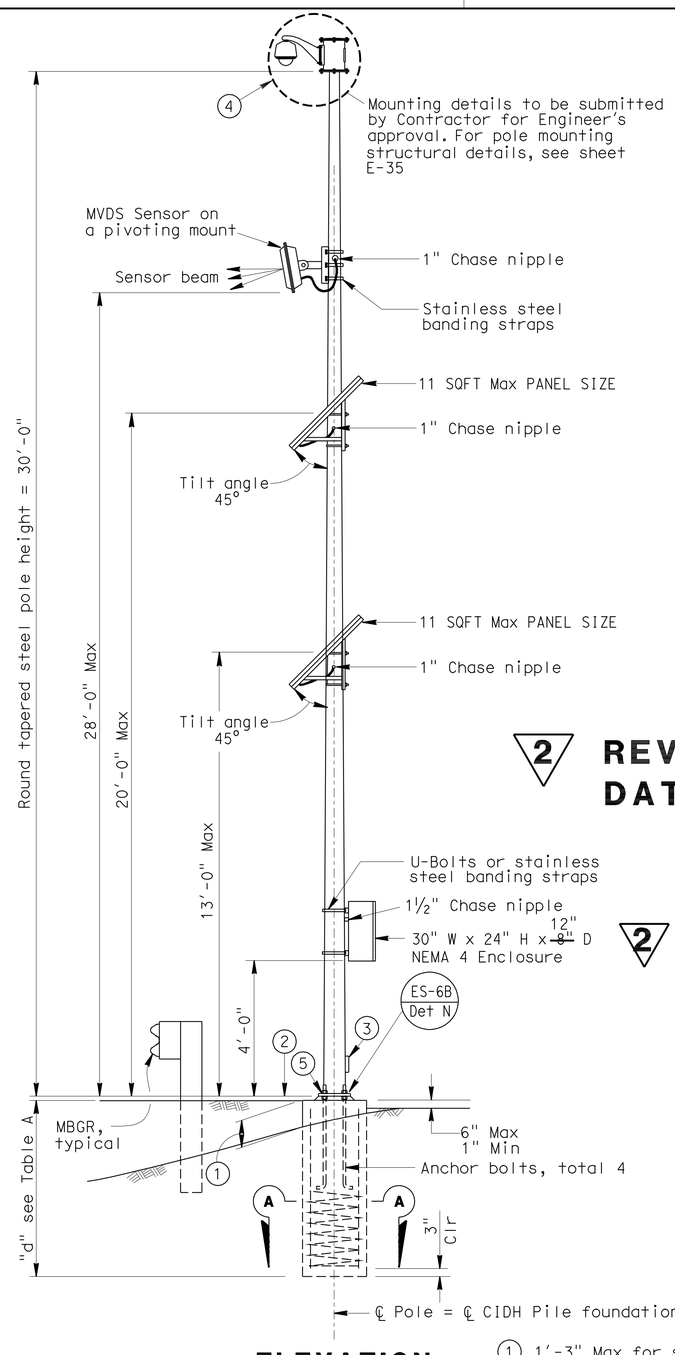

ELEVATION
CCTV 30
(Location 25)
NO SCALE

1. 1'-3" Max for sloped finished grade
2. Bottom of base plate
3. Handhole (ES-7M)
4. Camera with mounting arm
5. Fatigue resistant weld (ES-7M Det F)

NOTE:
THE CONTRACTOR SHALL VERIFY ALL CONTROLLING FIELD DIMENSIONS BEFORE ORDERING OR FABRICATING ANY MATERIAL.

TABLE A

Pole Type	Pole Data: Height "h"	Min OD: BASE	Min OD: TOP	Thickness	Base Plate Data: "C" 1'-1"	Thickness	Anchor Bolts: SIZE 1¼"	Anchor Bolts: BC = BOLT CIRCLE 1'-1"	"d" 2'-0" Ø CIDH Pile: LEVEL GROUND	"d" 2'-0" Ø CIDH Pile: SLOPING GROUND	Structural Steel LBS plus 3.5% Galvanizing
CCTV 30	30'	8"	3⅞"	0.1793"	~~1'-0"~~	1"	~~1"~~ x 3'-0 x 4"	~~11"~~	12'-0"	12'-0"	475

TABLE B

Attachment	Mounting Height
Enclosure	4'-0" Max bottom Clr
Photovoltaic	13'- 20'
MVDS	28' Max

TABLE C

Spread Footing		
Ground	Footing Size Length x Width x Depth	Reinforcement Top & Bottom
Level	6'-0" x 6'-0" x 1'-6"	7 - #4
Sloping	7'-0" x 7'-0" x 1'-6"	8 - #4

2

2 **REVISED PER ADDENDUM No. 2 DATED MARCH 11, 2010**

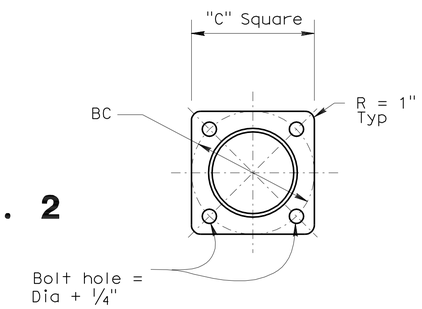

BASE PLATE
SCALE: 1½"= 1'

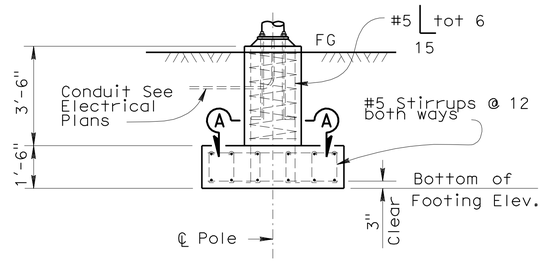

ALTERNATIVE FOOTING ELEVATION
(See TABLE C)
NO SCALE

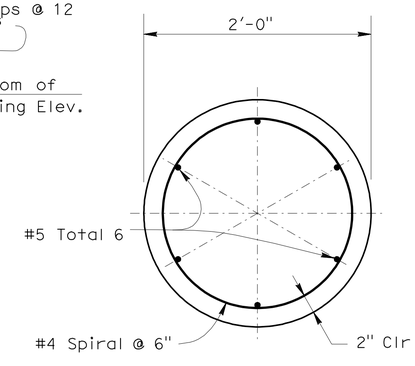

SECTION A-A
SCALE: 1½"= 1'

GENERAL NOTES:

SPECIFICATIONS

Design : AASHTO Standard specifications for structural supports for highway signs, luminaires and traffic signals dated 2001.

LOADING

Wind Loadings : 100 mph

UNIT STRESSES

Structural Steel : fy = 48,000 psi tapered steel tube
fy = 36,000 psi unless otherwise noted.

Anchor bolts = A307

Reinforced Concrete : f'c = 3,600 psi
fy = 60,000 psi

NOTES:

1. All steel shall be galvanized after fabrication.
2. During pole erection the post shall be raked as necessary with the use of leveling nuts to provide a plumb pole axis.
3. The foundation shall be treated as level ground condition if the slope inclination is flatter than 2H:1V.
4. For devices mounted and mounting heights, see TABLE B.

CLOSED CIRCUIT TELEVISION SYSTEM
MICROWAVE VEHICLE DETECTION SYSTEM
(POLE DETAILS)

E-31

STATE OF CALIFORNIA - DEPARTMENT OF TRANSPORTATION
Caltrans SPECIAL DESIGNS BRANCH

PROJECT ENGINEER ANDREW BUI | CALCULATED/DESIGNED BY E LOPEZ | CHECKED BY A BUI | DATE 6-20-08 | DETAILS D W JUSTICE Jr | QUANTITIES E LOPEZ | 6-20-08

LAST REVISION 3-12-09 | DATE PLOTTED => 11-MAR-2010 | TIME PLOTTED => 11:18

ORIGINAL SCALE IN INCHES FOR REDUCED PLANS 0 1 2 3

USERNAME => trrichf
DGN FILE => spec_des_br_proj/2008sd/05-0n2601/05_0n2601_e31.add

CU 06391 | EA 0N2601

DIST	COUNTY	ROUTE	POST MILES TOTAL PROJECT	SHEET No	TOTAL SHEETS
05	Mon	1	72.4/R101.6	37	51

REGISTERED CIVIL ENGINEER 2/23/09 DATE

5-4-09
PLANS APPROVAL DATE

REGISTERED PROFESSIONAL ENGINEER ANDREW BUI No. C63560 Exp. 9/30/10 CIVIL STATE OF CALIFORNIA

The State of California or its officers or agents shall not be responsible for the accuracy or completeness of electronic copies of this plan sheet.

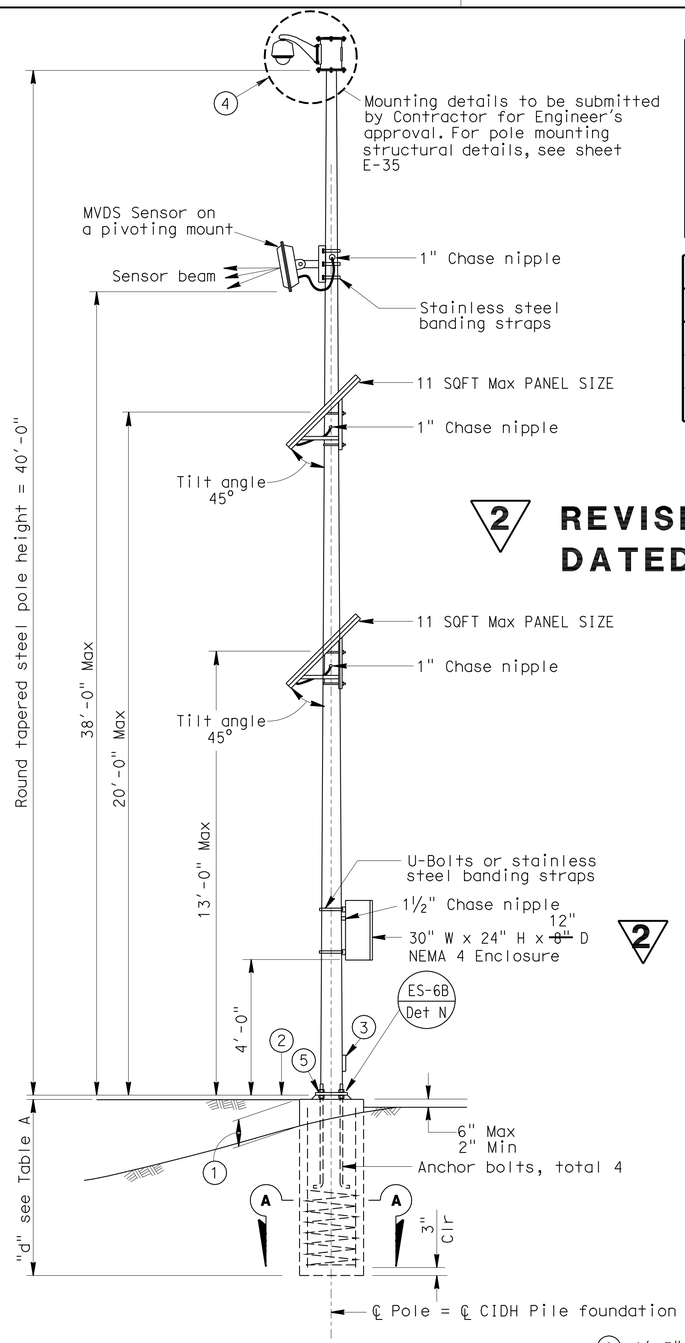

ELEVATION
CCTV/VDS 40
(Location 7)
NO SCALE

TABLE A

Pole Type	Pole Data: Height "h"	Pole Data: Min OD BASE	Pole Data: Min OD TOP	Pole Data: Thickness	Base Plate Data: "C"	Base Plate Data: Thickness	Base Plate Data: Anchor Bolts SIZE	Base Plate Data: Anchor Bolts BC = BOLT CIRCLE	"d" 2'-0" Ø CIDH Pile: LEVEL GROUND	"d" 2'-0" Ø CIDH Pile: SLOPING GROUND	Structural Steel LBS plus 3.5% Galvanizing
CCTV/VDS 40	40'	9⅜"	3⅞"	0.1793"	1'-1"	1"	1¼" x 3'-0 x 4"	1'-1"	12'-0"	12'-0"	650

TABLE B

Attachment	Mounting Height
Enclosure	4'-0" Max bottom Clr
Photovoltaic	13'- 20'
MVDS	38' Max

TABLE C

Spread Footing		
Ground	Footing Size Length x Width x Depth	Reinforcement Top & Bottom
Level	6'-0" x 6'-0" x 1'-6"	7 - #4
Sloping	7'-0" x 7'-0" x 1'-6"	8 - #4

2 REVISED PER ADDENDUM No. 2
DATED MARCH 11, 2010

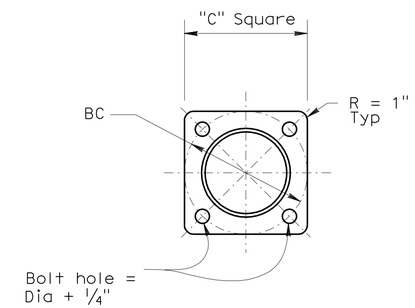

BASE PLATE
SCALE: 1½"= 1'

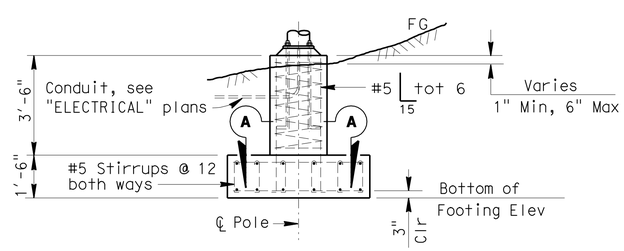

ALTERNATIVE FOOTING ELEVATION
(See TABLE C)
NO SCALE

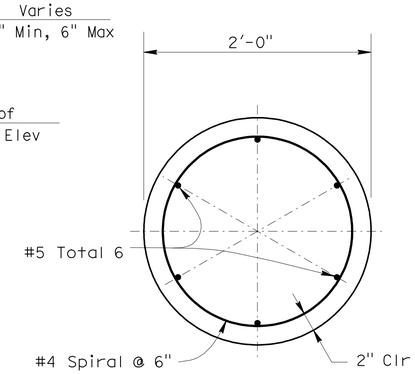

SECTION A-A
SCALE: 1½"= 1'

GENERAL NOTES:

SPECIFICATIONS

Design : AASHTO Standard specifications for structural supports for highway signs, luminaires and traffic signals dated 2001.

LOADING

Wind Loadings : 100 mph

UNIT STRESSES

Structural Steel : fy = 48,000 psi tapered steel tube
fy = 36,000 psi unless otherwise noted.

Anchor bolts = A307

Reinforced Concrete : f'c = 3,600 psi
fy = 60,000 psi

NOTES:

1. All steel shall be galvanized after fabrication.
2. During pole erection the post shall be raked as necessary with the use of leveling nuts to provide a plumb pole axis.
3. The foundation shall be treated as level ground condition if the slope inclination is flatter than 2H:1V.
4. For devices mounted and mounting heights, see TABLE B.

1. 1'-3" Max for sloped finished grade
2. Bottom of base plate
3. Handhole (ES-7M)
4. Camera with mounting arm
5. Fatigue resistant weld (ES-7M Det F)

NOTE:
THE CONTRACTOR SHALL VERIFY ALL CONTROLLING FIELD DIMENSIONS BEFORE ORDERING OR FABRICATING ANY MATERIAL.

CLOSED CIRCUIT TELEVISION SYSTEM
MICROWAVE VEHICLE DETECTION SYSTEM
(POLE DETAILS)

E-32

D W JUSTICE JR	DETAILS	DATE 6-23-08	CALCULATED/DESIGNED BY E LOPEZ
E LOPEZ	QUANTITIES	6-23-08	CHECKED BY A BUI

PROJECT ENGINEER ANDREW BUI

STATE OF CALIFORNIA - DEPARTMENT OF TRANSPORTATION
Caltrans SPECIAL DESIGNS BRANCH

ORIGINAL SCALE IN INCHES FOR REDUCED PLANS 0 1 2 3

USERNAME => trrichf
DGN FILE => spec_des_br_proj/2008sd/05-0n2601/05_0n2601_e32.add

CU 06391 EA 0N2601

LAST REVISION 3-12-09 DATE PLOTTED => 11-MAR-2010 TIME PLOTTED => 11:18

DIST	COUNTY	ROUTE	POST MILES TOTAL PROJECT	SHEET No	TOTAL SHEETS
05	Mon	1	72.4/R101.6	38	51

REGISTERED CIVIL ENGINEER 2/23/09 DATE

5-4-09
PLANS APPROVAL DATE

REGISTERED PROFESSIONAL ENGINEER ANDREW BUI No. C63560 Exp. 9/30/10 CIVIL STATE OF CALIFORNIA

The State of California or its officers or agents shall not be responsible for the accuracy or completeness of electronic copies of this plan sheet.

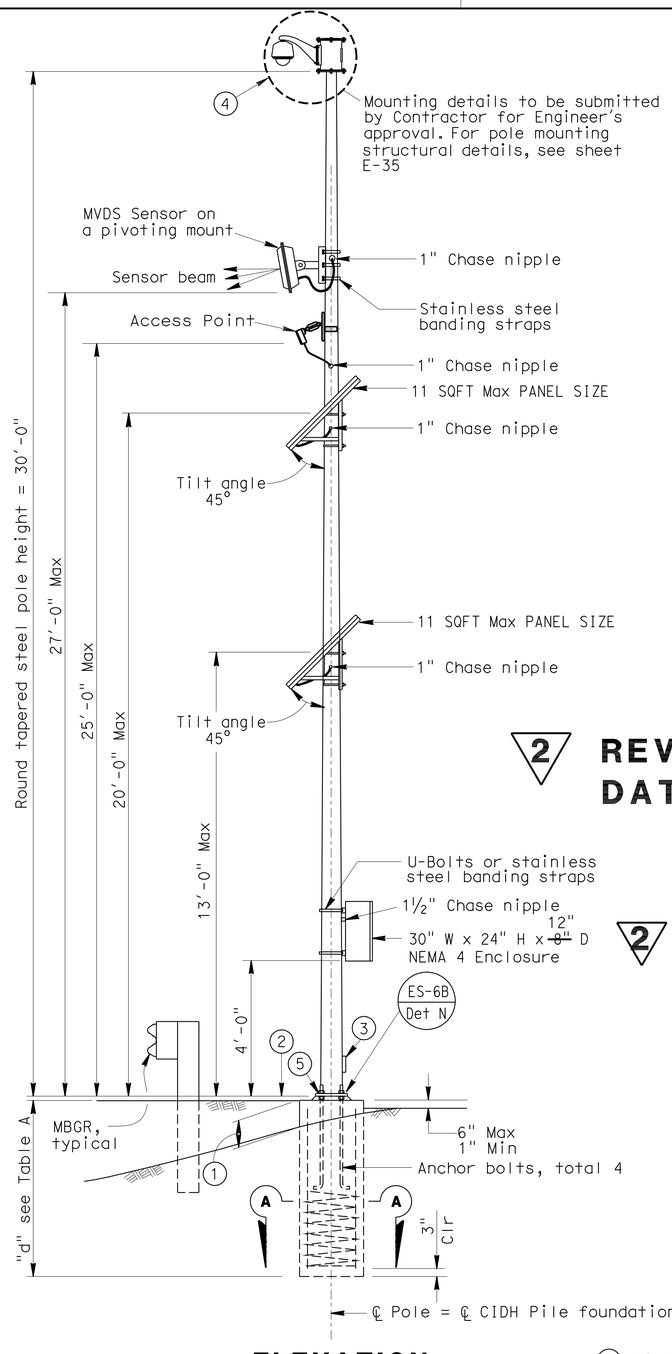

ELEVATION
CCTV/VDS 30
(Location 13, 26,29,33)
NO SCALE

NOTE:
THE CONTRACTOR SHALL VERIFY ALL CONTROLLING FIELD DIMENSIONS BEFORE ORDERING OR FABRICATING ANY MATERIAL.

TABLE A

Pole Type	Pole Data: Height "h"	Min OD: BASE	Min OD: TOP	Thickness	Base Plate Data: "C" 1'-1"	Thickness	Anchor Bolts: SIZE 1¼"	Anchor Bolts: BC = BOLT CIRCLE 1'-1"	"d" 2'-0" Ø CIDH Pile: LEVEL GROUND	"d" 2'-0" Ø CIDH Pile: SLOPING GROUND	Structural Steel LBS plus 3.5% Galvanizing
CCTV/VDS 30	30'	8"	3⅞"	0.1793"	~~1'-0"~~	1"	~~1"~~ x 3'-0 x 4"	~~11"~~	12'-0"	12'-0"	475

TABLE B

Attachment	Mounting Height
Enclosure	4'-0" Max bottom Clr
Photovoltaic	13'- 20'
MVDS	27' Max
AP	25' Max

TABLE C

Spread Footing		
Ground	Footing Size Length x Width x Depth	Reinforcement Top & Bottom
Level	6'-0" x 6'-0" x 1'-6"	7 - #4
Sloping	7'-0" x 7'-0" x 1'-6"	8 - #4

2

2 **REVISED PER ADDENDUM No. 2 DATED MARCH 11, 2010**

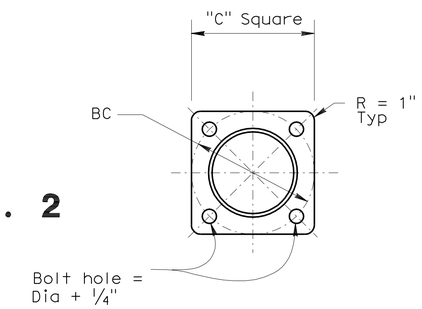

BASE PLATE
SCALE: 1½"= 1'

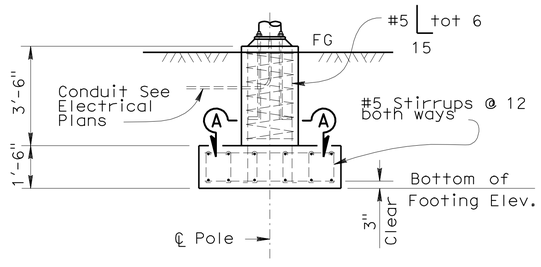

ALTERNATIVE FOOTING ELEVATION
(See TABLE C)
NO SCALE

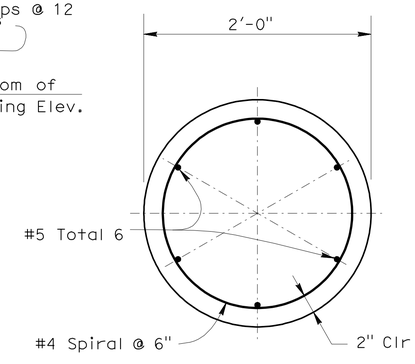

SECTION A-A
SCALE: 1½"= 1'

GENERAL NOTES:

SPECIFICATIONS

Design : AASHTO Standard specifications for structural supports for highway signs, luminaires and traffic signals dated 2001.

LOADING

Wind Loadings : 100 mph

UNIT STRESSES

Structural Steel : fy = 48,000 psi tapered steel tube
fy = 36,000 psi unless otherwise noted.

Anchor bolts = A307

Reinforced Concrete : f'c = 3,600 psi
fy = 60,000 psi

NOTES:

1. All steel shall be galvanized after fabrication.
2. During pole erection the post shall be raked as necessary with the use of leveling nuts to provide a plumb pole axis.
3. The foundation shall be treated as level ground condition if the slope inclination is flatter than 2H:1V.
4. For devices mounted and mounting heights, see TABLE B

(1) 1'-3" Max for sloped finished grade
(2) Bottom of base plate
(3) Handhole (ES-7M)
(4) Camera with mounting arm
(5) Fatigue resistant weld (ES-7M Det F)

CLOSED CIRCUIT TELEVISION SYSTEM
WIRELESS VEHICLE DETECTION SYSTEM
MICROWAVE VEHICLE DETECTION SYSTEM
(POLE DETAILS)

E-33

STATE OF CALIFORNIA - DEPARTMENT OF TRANSPORTATION	SPECIAL DESIGNS BRANCH	PROJECT ENGINEER ANDREW BUI	CALCULATED/DESIGNED BY E LOPEZ; CHECKED BY A BUI; DETAILS D W JUSTICE JR; QUANTITIES; DATE 6-23-08; 6-23-08

LAST REVISION 3-12-09 DATE PLOTTED => 11-MAR-2010 TIME PLOTTED => 11:18

ORIGINAL SCALE IN INCHES FOR REDUCED PLANS 0 1 2 3

USERNAME => trrichf
DGN FILE => spec_des_br_proj/2008sd/05-0n2601/05_0n2601_e33.add

CU 06391 EA 0N2601