Dist	COUNTY	ROUTE	POST MILES TOTAL PROJECT	SHEET No.	TOTAL SHEETS
05	SCr	17	6.0/12.6	52	283

REGISTERED CIVIL ENGINEER 04-29-09 DATE

7-13-09
PLANS APPROVAL DATE

REGISTERED PROFESSIONAL ENGINEER James Angelo Labanowski, Jr. No. C55039 Exp. 6/30/10 CIVIL STATE OF CALIFORNIA

THE STATE OF CALIFORNIA OR ITS OFFICERS OR AGENTS SHALL NOT BE RESPONSIBLE FOR THE ACCURACY OR COMPLETENESS OF SCANNED COPIES OF THIS PLAN SHEET.

URS CORPORATION
1380 LEAD HILL BLVD
SUITE 100
ROSEVILLE, CA 95661

NOTES:

1. REFER TO TYPICAL CROSS SECTIONS FOR STRUCTURAL PAVEMENT DEPTHS.
2. SEE Q-SHEETS FOR ROADWAY EXCAVATION, AND ROADWAY EXCAVATION (TYPE Z-2) QUANTITIES.

LEGEND:

1 ROADWAY EXCAVATION (TYPE Z-2) (AERIALLY DEPOSITED LEAD)

ROADWAY EXCAVATION

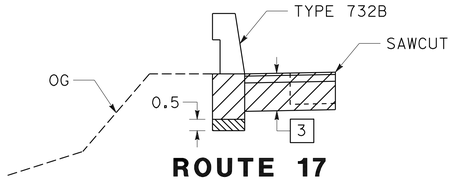

ROUTE 17
SOUTHBOUND

LOCATION 4: STA "B4" 400+50.00 TO 403+39.50
LOCATION 4: STA "B4" 404+59.50 TO 404+80.00
LOCATION 5: STA "B5" 500+50.00 TO 501+00.00
LOCATION 5: STA "B5" 506+21.00 TO 506+65.00

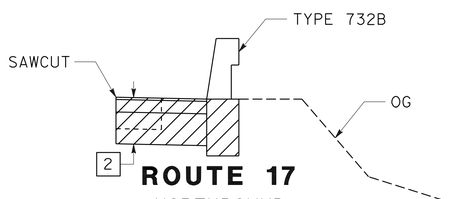

ROUTE 17
NORTHBOUND

LOCATION 2: STA "B2" 201+43.20 TO 201+53.20
LOCATION 2: STA "B2" 206+85.20 TO 207+00.00

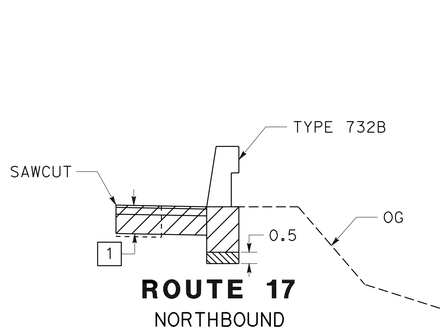

ROUTE 17
NORTHBOUND

LOCATION 1: STA "B1" 101+00.00 TO 102+17.58

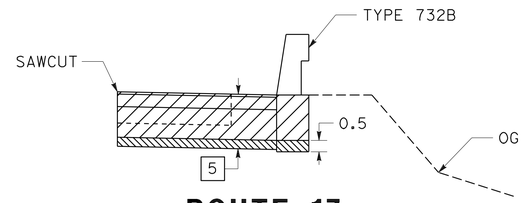

ROUTE 17
NORTHBOUND

LOCATION A: STA "A-LINE" 19+79.23 TO 20+26.51

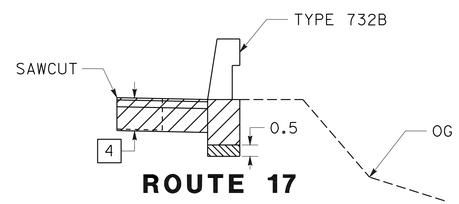

ROUTE 17
NORTHBOUND

LOCATION 14: STA "B14" 1401+43.48 TO 1403+97.47

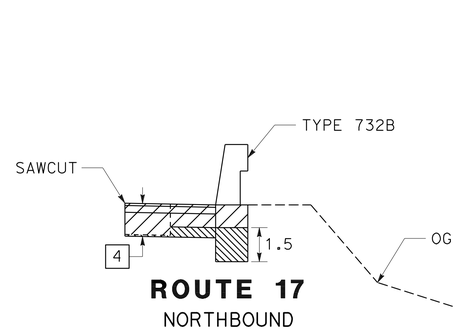

ROUTE 17
NORTHBOUND

LOCATION 13: STA "B13" 1301+00.00 TO 1301+75.00
LOCATION 13: STA "B13" 1305+28.00 TO 1305+40.00
LOCATION 19/21: STA "B19/21" 1900+50.00 TO 1900+64.83
LOCATION 19/21: STA "B19/21" 1900+74.08 TO 1903+03.38
LOCATION 22: STA "B22" 2200+65.00 TO 2200+95.00
LOCATION 22: STA "B22" 2202+52.75 TO 2202+95.95
LOCATION 22: STA "B22" 2203+07.95 TO 2203+47.00

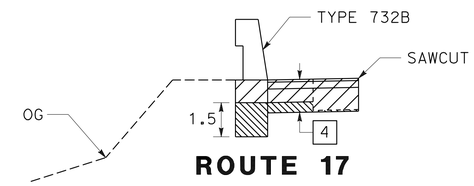

ROUTE 17
SOUTHBOUND

LOCATION 15: STA "B15" 1500+50.00 TO 1501+23.00
LOCATION 15: STA "B15" 1505+80.00 TO 1506+97.13
LOCATION 15: STA "B15" 1507+08.13 TO 1508+15.25
LOCATION 15: STA "B15" 1508+24.75 TO 1508+90.00
LOCATION 17: STA "B17" 1700+50.00 TO 1701+32.00

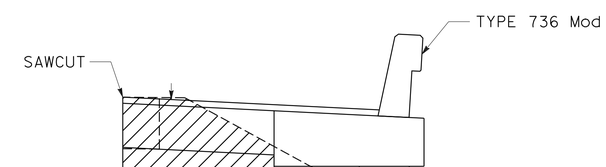

ROUTE 17
NORTHBOUND

LOCATION A: STA "A-LINE" 20+26.51 TO 24+46.55

1 **REVISED PER ADDENDUM No. 1 DATED OCTOBER 29, 2009**

CONSTRUCTION DETAILS
(TYPICAL CROSS SECTION ROADWAY EXCAVATION)

NO SCALE

C-11

STATE OF CALIFORNIA - DEPARTMENT OF TRANSPORTATION
Caltrans

CONSULTANT FUNCTIONAL SUPERVISOR: JORGE AGUILAR
CALCULATED-DESIGNED BY: JAMES A. LABANOWSKI JR.
CHECKED BY: MARK POLISCHUK
REVISED BY / DATE REVISED

LAST REVISION 04-29-09
DATE PLOTTED => 28-OCT-2009
TIME PLOTTED => 11:17

Dist	COUNTY	ROUTE	POST MILES TOTAL PROJECT	SHEET No.	TOTAL SHEETS
05	SCr	17	6.0/12.6	53	283

REGISTERED CIVIL ENGINEER 04-29-09 DATE

7-13-09
PLANS APPROVAL DATE

REGISTERED PROFESSIONAL ENGINEER James Angelo Labanowski, Jr. No. C55039 Exp. 6/30/10 CIVIL STATE OF CALIFORNIA

THE STATE OF CALIFORNIA OR ITS OFFICERS OR AGENTS SHALL NOT BE RESPONSIBLE FOR THE ACCURACY OR COMPLETENESS OF SCANNED COPIES OF THIS PLAN SHEET.

URS CORPORATION
1380 LEAD HILL BLVD
SUITE 100
ROSEVILLE, CA 95661

LEGEND:

1 ROADWAY EXCAVATION (TYPE Z-2) (AERIALLY DEPOSITED LEAD)

ROADWAY EXCAVATION

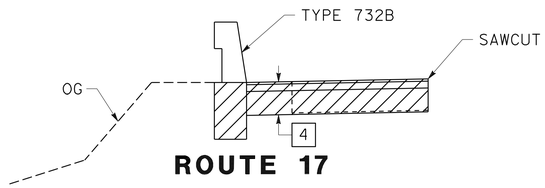

ROUTE 17
SOUTHBOUND

LOCATION 20: STA "B20" 2000+65.00 TO 2001+60.00
LOCATION 20: STA "B20" 2001+60.00 TO 2002+80.00
LOCATION 20: STA "B20" 2002+80.00 TO 2003+66.02
LOCATION 20: STA "B20" 2003+66.02 TO 2004+95.00

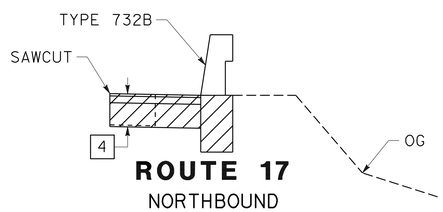

ROUTE 17
NORTHBOUND

LOCATION 19/21: STA "B19/21" 1908+18.38 TO 1909+09.54
LOCATION 19/21: STA "B19/21" 1909+21.79 TO 1909+70.00
LOCATION 19/21: STA "B19/21" 1914+36.91 TO 1915+00.00
LOCATION 23: STA "B23" 2300+50.00 TO 2301+11.00
LOCATION 23: STA "B23" 2303+64.00 TO 2304+00.00

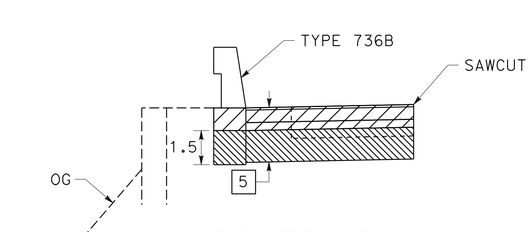

ROUTE 17
SOUTHBOUND

LOCATION B: STA "B-LINE" 62+95.44 TO 65+49.66

LIMITS OF ROADWAY EXCAVATION (TYPE Z-2)

LOCATION	STATION LIMITS		DEPTH OF (TYPE Z-2) MATERIAL
No.	FROM	TO	FT
1	101+00.00	102+17.58	2
2	201+43.20	201+53.20	3
	206+85.20	207+00.00	3
4	400+50.00	403+39.50	2
	404+59.50	404+80.00	2
5	500+50.00	501+00.00	2
	506+21.00	506+65.00	2
13	1301+00.00	1301+75.00	1
	1305+28.00	1305+40.00	1
14	1401+43.48	1403+97.47	2
A	19+79.23	20+26.51	2
	20+26.51	24+46.55	2
15	1500+50.00	1501+23.00	1
	1505+80.00	1506+97.13	1
	1507+08.13	1508+15.25	1
	1508+24.75	1508+90.00	1
17	1700+50.00	1701+32.00	1
B	62+95.44	65+49.66	1
19/21	1900+50.00	1900+64.83	1
	1900+74.08	1903+03.38	1
	1908+18.38	1909+09.54	3
	1909+21.79	1909+70.00	3
	1914+36.91	1915+00.00	3
20	2001+60.00	2002+80.00	3
	2003+66.02	2004+95.00	3
	2000+65.00	2001+60.00	3
	2002+80.00	2003+66.02	3
22	2200+65.00	2200+95.00	1
	2202+52.75	2202+95.95	1
	2203+07.95	2203+47.00	1
23	2300+50.00	2301+11.00	6
	2303+64.00	2304+00.00	6

1 **REVISED PER ADDENDUM No. 1 DATED OCTOBER 29, 2009**

CONSTRUCTION DETAILS
(TYPICAL CROSS SECTION ROADWAY EXCAVATION)

NO SCALE

C-12

REVISED BY | DATE REVISED
MARK POLISCHUK | JAMES A. LABANOWSKI JR.
CALCULATED-DESIGNED BY | CHECKED BY
CONSULTANT FUNCTIONAL SUPERVISOR
JORGE AGUILAR
STATE OF CALIFORNIA - DEPARTMENT OF TRANSPORTATION
Caltrans

LAST REVISION 04-29-09 | DATE PLOTTED => 28-OCT-2009 | TIME PLOTTED => 11:17

Dist	COUNTY	ROUTE	POST MILES TOTAL PROJECT	SHEET No.	TOTAL SHEETS
05	SCr	17	6.0/12.6	145	283

REGISTERED CIVIL ENGINEER 04-29-09 DATE

7-13-09
PLANS APPROVAL DATE

REGISTERED PROFESSIONAL ENGINEER James Angelo Labanowski, Jr. No. C55039 Exp. 6/30/10 CIVIL STATE OF CALIFORNIA

THE STATE OF CALIFORNIA OR ITS OFFICERS OR AGENTS SHALL NOT BE RESPONSIBLE FOR THE ACCURACY OR COMPLETENESS OF SCANNED COPIES OF THIS PLAN SHEET.

URS CORPORATION
1380 LEAD HILL BLVD
SUITE 100
ROSEVILLE, CA 95661

ROADWAY 1

LOCATION No.	STATION	AGGREGATE BASE CLASS 2	IMPORTED BORROW	ROADWAY EXCAVATION	ROADWAY EXCAVATION (TYPE Z-2) (AERIALLY DEPOSITED LEAD)	IMPORTED MATERIAL (SHOULDER BACKING)	HOT MIX ASPHALT (TYPE A)	HOT MIX ASPHALT (OPEN GRADED)	TACK COAT	COLD PLANE ASPHALT CONCRETE PAVEMENT	PLACE HOT MIX ASPHALT DIKE (TYPE F)	PLACE HOT MIX ASPHALT DIKE (TYPE E)	PLACE HOT MIX ASPHALT DIKE (TYPE C)	PLACE HOT MIX ASPHALT (MISC AREA)
		CY				TON				SQYD	LF			SQYD
1	"B1" 101+00.00 TO 105+65.00	12.9		4.2	31.2	2.0	12.3	111.1	6.2	1458.0		34.9		
2	"B2" 200+00.00 TO 207+00.00	17.5			29.1	4.6	16.5	159.3	8.8	2086.6		73.4		
3	"M3" 300+00.00 TO 302+00.00	14.5			20.0		11.2	2.8	0.7		174.1			
4	"B4" 400+50.00 TO 404+80.00	54.1		8.3	103.3	24.3	35.0	149.3	9.2	1163.8				
5	"B5" 500+00.00 TO 506+90.00	12.4		2.6	29.1	5.9	8.0	102.4	5.5	1954.2				2.0
8	"M8" 800+00.00 TO 800+13.00										13.1			
10	"M10" 1000+00.00 TO 1005+00.00										467.2			
13	"B13" 1301+00.00 TO 1305+00.00	11.2		6.9	18.3		8.6	80.0	4.4	1170.3				
14	"B14" 1401+09.48 TO 1404+26.76	35.2		7.1	78.1	16.2	27.2	175.5	10.1	1083.8		29.5		
15	"B15" 1500+50.00 TO 1509+20.00	30.0		28.9	62.9	11.3	23.2	43.3	3.3	2311.0				2.0
17	"B17" 1700+50.00 TO 1701+52.00	11.7		12.7	16.4	1.9	9.0	339.5	17.4	604.6				
18	"M18" 1800+50.00 TO 1800+60.00										164.2			2.0
19/21	"B19/21" 1900+50.00 TO 1915+00.00	44.9		26.1	99.7	9.0	34.7	127.9	8.1	4468.0				2.0
20	"B20" 2000+50.00 TO 2005+11.00	65.6	248.4		152.4		50.6	65.6	5.8	1688.7		19.7		1.6
22	"B22" 2200+65.00 TO 2203+47.00	6.8		9.2	31.9	0.7	5.3	65.6	3.5	844.0				
22 (MINOR)	PRIVATE DRIVE			80.0	~~80.0~~		~~23.5~~							
23	"B23" 2304+00.00 TO 2304+14.81	30.5		6.0	52.8	1.7	23.5	83.4	4.2	1071.2		15.0		
24	"M24" 2401+00.00 TO 2408+00.00										627.8		38.0	
PLACE HOT MIX ASPHALT							25.8		1.3					
SHEET TOTAL		347.3	248.4	~~111.9~~ 192.0	~~805.3~~ 725.2	77.6	290.9	1505.6	88.6	19,904.3	1446.3	172.5	38.0	9.6

CONCRETE BARRIER 1

LOCATION No.	STATION	CONCRETE BARRIER (TYPE 732B)	CONCRETE BARRIER (TYPE 736B)	CONCRETE BARRIER (TYPE 60)	CONCRETE HEADLIGHT GLARE SCREEN	REMOVE CONCRETE BARRIER	CONCRETE BARRIER TRANSITION
		LF					
1	"B1" 101+00.00 TO 105+65.00	117.6					
2	"B2" 200+00.00 TO 207+00.00	24.8					
4	"B4" 400+50.00 TO 404+80.00	289.5					
5	"B5" 500+00.00 TO 506+90.00	94.0					
13	"B13" 1301+00.00 TO 1305+00.00	87.0					
14	"B14" 1401+09.48 TO 1404+26.76	254.0					9
15	"B15" 1500+50.00 TO 1509+20.00	362.5					
17	"B17" 1700+50.00 TO 1701+52.00	93.0					9
19/21	"B19/21" 1900+50.00 TO 1915+00.00	458.8					
20	"B20" 2000+50.00 TO 2005+11.00	445.0					15
22	"B22" 2200+65.00 TO 2203+47.00	112.3					
23	"B23" 2304+00.00 TO 2304+14.81	97.0					
25	"M25" 2500+71.82 TO 2501+53.10						9
SHEET TOTAL		2435.5	0.0	0.0	0.0	0.0	42.0

REMOVE ASPHALT CONCRETE DIKE

LOCATION No.	STATION FROM	STATION TO	NB/SB	LENGTH LF
8	"M8" 800+00.00	"M8" 800+13.00	SB	13.0
10	"M10" 1000+19.06	"M10" 1004+70.80	NB	467.9
11	"M11" 1100+85.26	"M11" 1100+97.14	SB	12.0
20	"B20" 2004+70.00	"B20" 2004+79.94	NB	19.7
24	"M24" 2401+12.17	"M24" 2407+59.45	NB	647.4
TOTAL				1160.0

TRANSITION RAILING (TYPE WB)

LOCATION No.	STATION	DIRECTION NB/SB	TRANSITION RAILING (TYPE WB) EA
14	"B14" 1401+34.48	NB	1
25	"M25" 2501+21.96	NB	1
TOTAL			2

DITCH EXCAVATION

LOCATION No.	DITCH LENGTH LF	DITCH AREA SF	EXCAVATED VOLUME CY
18	70	0.75	1.9
TOTAL			1.9

1 REVISED PER ADDENDUM No. 1 DATED OCTOBER 29, 2009

SUMMARY OF QUANTITIES

NO SCALE

Q-2

REVISED BY | DATE REVISED
MARK POLISCHUK | JAMES A. LABANOWSKI JR.
CALCULATED-DESIGNED BY | CHECKED BY
CONSULTANT FUNCTIONAL SUPERVISOR: JORGE AGUILAR
STATE OF CALIFORNIA - DEPARTMENT OF TRANSPORTATION
Caltrans

LAST REVISION 04-29-09 | DATE PLOTTED => 28-OCT-2009 | TIME PLOTTED => 11:17

Dist	COUNTY	ROUTE	POST MILES TOTAL PROJECT	SHEET No.	TOTAL SHEETS
05	SCr	17	6.0/12.6	146	283

REGISTERED CIVIL ENGINEER 4/21/09 DATE

7-13-09
PLANS APPROVAL DATE

REGISTERED PROFESSIONAL ENGINEER KEEN POONG No. 66495 Exp. 6/30/10 CIVIL STATE OF CALIFORNIA

THE STATE OF CALIFORNIA OR ITS OFFICERS OR AGENTS SHALL NOT BE RESPONSIBLE FOR THE ACCURACY OR COMPLETENESS OF SCANNED COPIES OF THIS PLAN SHEET.

LAN ENGINEERING CORP.
2905 STENDER WAY
SUITE 82
SANTA CLARA, CA 95054

CONCRETE BARRIER

LOCATION	STATION	CONCRETE BARRIER (TYPE 732B)	CONCRETE BARRIER (TYPE 736B)	CONCRETE BARRIER (TYPE 60)	CONCRETE BARRIER (TYPE 60G)	REMOVE CONCRETE BARRIER (TYPE 50)	REMOVE CONCRETE BARRIER	CONCRETE BARRIER TRANSITION
		LF						
1	-				260	290		30
19/21	-			260		290		30
A	A 19+79.23 TO 20+26.51		51					
A	A 19+83.18 TO 20+62.41						80	
A	A 24+46.55 TO 24+44.06		15					
B	B 62+95.44 TO 65+49.66		255					
	SHEET TOTAL		321	260	260	580	80	60
	FROM CB TABLE AT Q-2	2435.5						42
	TOTAL	2435.5	321	260	260	580	80	102

CRASH CUSHION, SAND FILLED

LOCATION	STATION	CRASH CUSHION
		EA
B	B 69+19.33	1
	TOTAL	1

REMOVE METAL BEAM GUARD RAILING

LOCATION	STATION	LF
A	A 20+59.60 TO 24+35.30	376
B	B 62+87.98 TO 65+50.44	263
	TOTAL	639

1 ROADWAY

LOCATION	STATION	CLASS 2 AGGREGATE BASE	IMPORTED BORROW	ROADWAY EXCAVATION	ROADWAY EXCAVATION (TYPE Z-2) (AERIALLY DEPOSITED LEAD)	IMPORTED MATERIAL (SHOULDER BACKING)	HOT MIX ASPHALT (TYPE A)	HOT MIX ASPHALT (OPEN GRADED)	TACK COAT	COLD PLANE ASPHALT CONCRETE PAVEMENT	PLACE HOT MIX ASPHALT DIKE (TYPE F)	PLACE HOT MIX ASPHALT DIKE (TYPE E)	PLACE HOT MIX ASPHALT DIKE (TYPE C)	PLACE HOT MIX ASPHALT (MISC AREA)
		CY				TON				SQYD	LF			SQYD
A	A 19+79.23 TO 25+10.14	151.6	118.0	31.2	124.8		114	128.2	14.5	1452				
A	T 24+05.41 TO 24+66.43						38.3		2.3					
B	B 62+95.44 TO 65+49.66	66.0					49.6		3.0					
B	B 62+95.44 TO 68+85.84		104.0	48	32			129.1	7.7	1575				
B	B 67+69.45 TO 68+85.84	88.6					33.0		2.0					
1	-						17.4		1.0					
19/21	-						17.4		1.0					
	SHEET TOTAL	306.2	222.0	79.2	156.8		269.7	257.3	31.5	3027				
	FROM ROADWAY TABLE AT Q-2	347.3	248.4	192.0 ~~111.9~~	725.2 ~~805.3~~	77.6	290.9	1505.6	88.6	19,904.3	1446.3	172.5	38.0	9.6
	TOTAL	718.5	470.4	~~191.1~~ 271.2	~~962.1~~ 882.0	77.6	560.6	1762.9	120.1	22,931.3	1446.3	172.5	38.0	9.6

1

1 REVISED PER ADDENDUM No. 1 DATED OCTOBER 29, 2009

SUMMARY OF QUANTITIES
Q-3

STATE OF CALIFORNIA - DEPARTMENT OF TRANSPORTATION
Caltrans

CONSULTANT FUNCTIONAL SUPERVISOR: WILLIAM NASCIMENTO
CALCULATED-DESIGNED BY: YOUICHI NAKAGAWA
CHECKED BY: KEEN POONG
REVISED BY
DATE REVISED

LAST REVISION 04-21-09 DATE PLOTTED => 28-OCT-2009 TIME PLOTTED => 11:18

DIST	COUNTY	ROUTE	POST MILES TOTAL PROJECT	SHEET No	TOTAL SHEETS
05	SCr	17	6.0/12.6	194	283

REGISTERED CIVIL ENGINEER 4-24-09 DATE

7-13-09
PLANS APPROVAL DATE

REGISTERED PROFESSIONAL ENGINEER T. Dudley No. C 039514 Exp. 12/31/09 CIVIL STATE OF CALIFORNIA

The State of California or its officers or agents shall not be responsible for the accuracy or completeness of electronic copies of this plan sheet.

LIM & NASCIMENTO ENGINEERING
20 EMPIRE DRIVE
LAKE FOREST, CALIFORNIA 92630

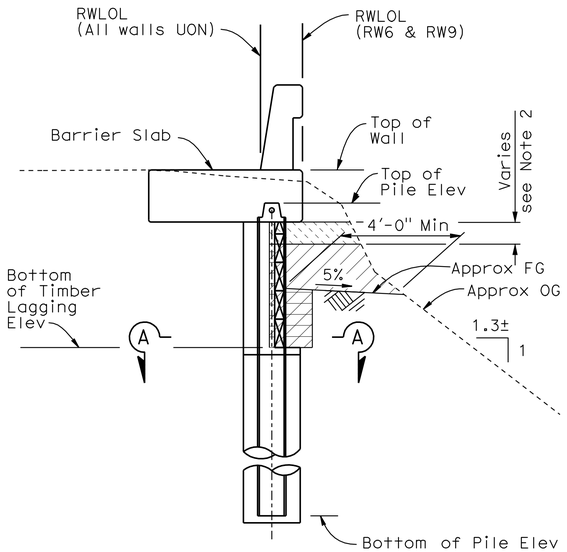

LIMITS OF PAYMENT FOR EXCAVATION AND BACKFILL (SOLDIER PILE WALL)

3/8" = 1'-0"

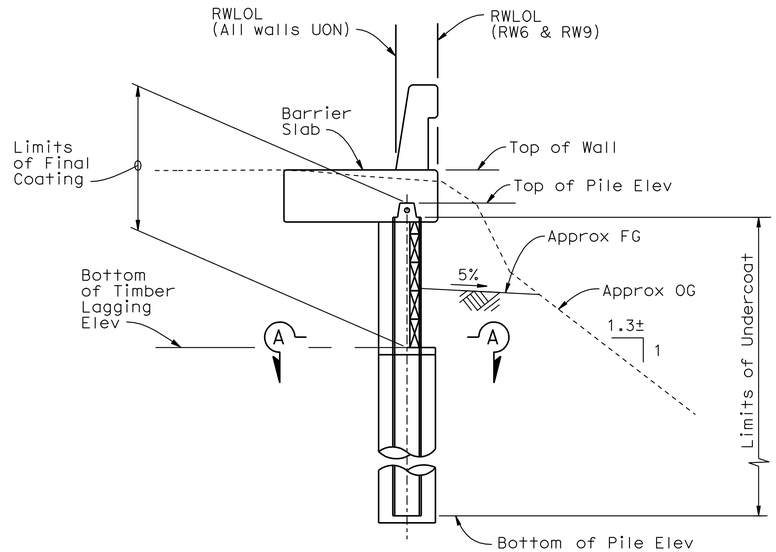

LIMITS OF PAYMENT FOR PAINTING OF PILES

3/8" = 1'-0"

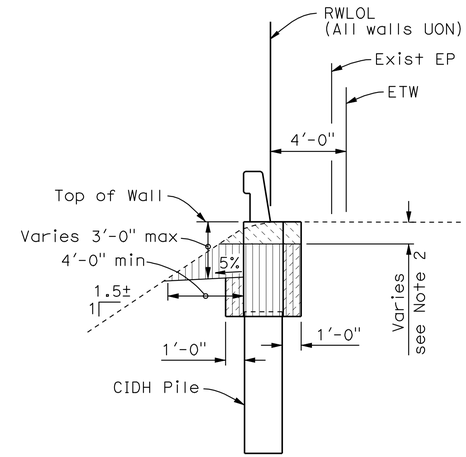

LIMITS OF PAYMENT FOR EXCAVATION AND BACKFILL (RETAINING WALL)

1/4" = 1'-0"

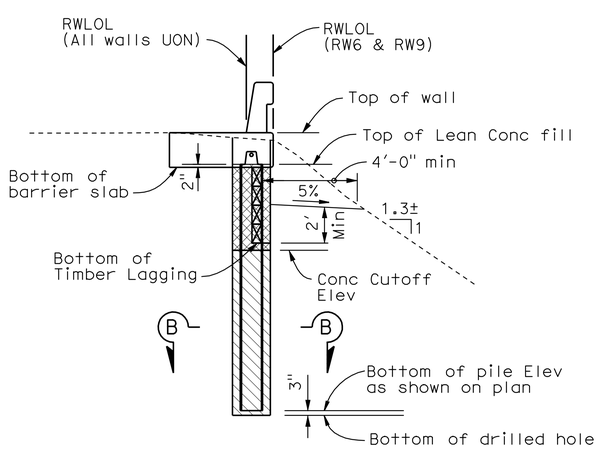

LIMITS OF PAYMENT FOR CONCRETE BACKFILL

1/4" = 1'-0"

GENERAL NOTES
LOAD FACTOR DESIGN

DESIGN: CALTRANS BRIDGE DESIGN SPECIFICATIONS - April 2000 (LFD)
(1996 AASHTO with Interims and Revision by CALTRANS)

LIVE LOAD: Surcharge = 240 psf

REINFORCED CONCRETE (Typ):

f'_c = 3.6 ksi (Concrete compressive strength at 28 days)
f_y = 60 ksi (Yield strength of reinforcement)

REINFORCED CONCRETE (CIDH Pile):

f'_c = 4.0 ksi (Concrete compressive strength at 28 days)
f_y = 60 ksi (Yield strength of reinforcement)

STRUCTURAL STEEL:

Steel Piles - ASTM Designation: A709, Grade 50
Bolts - ASTM Designation: A307

TIMBER:

Treated Douglas Fir Grade No. 1 or Better
~~Stress Grade Lumber Fb = 1,500 psi min E = 1,300,000 psi min~~ 1
Lagging members shall be sawn full size and pressure treated with preservative

TRAFFIC BARRIER LOAD:

Minimum design force: 20 kips/pile or
3.5 kips/ft X Pile Spacing not to exceed 40 kips.
Apply as lateral force at top of pile, pile connection into barrier slab assumed to be pinned.

SOIL STRENGTH PARAMETERS:

See Foundation Report for each retaining Wall for Soil Strength Parameters.

NOTE:

1. For Sections A-A and B-B see "General Notes No. 2" sheet.
2. See Limits of Structural Excavation (Type Z-2) (Aerially Deposited Lead) on "General Notes No. 2" sheet for variations in depth of Type Z-2 material.

LEGEND

- Structure Backfill (Soldier Pile Wall)
- Structure Excavation (Soldier Pile Wall)
- Structure Excavation (Retaining Wall)
- Structure Backfill (Retaining Wall)
- Lean Concrete Backfill
- Class 2 Concrete Backfill
- Structure Excavation (Type Z-2) (Aerially Deposited Lead)

Note:
The Contractor shall verify all controlling field dimensions before ordering or fabricating any material.

1 **REVISED PER ADDENDUM No. 1 DATED OCTOBER 29, 2009**

DESIGN OVERSIGHT Wel An
4-29-09
SIGN OFF DATE

	BY	CHECKED
DESIGN	T. Dudley	R. Price
DETAILS	S. Desalegn	R. Price
QUANTITIES	T. Dudley / M. Stiller	E. Navarez/S. Desalegn

PREPARED FOR THE STATE OF CALIFORNIA DEPARTMENT OF TRANSPORTATION

Stephen J. Mislinski
PROJECT ENGINEER

BRIDGE NO. Varies
POST MILE Varies

RETAINING WALLS
GENERAL NOTES NO. 1

DESIGN DETAIL SHEET (ENGLISH) (REV. 2/25/05)

ORIGINAL SCALE IN INCHES FOR REDUCED PLANS 0 1 2 3

CU 05
EA 0L70U1

DISREGARD PRINTS BEARING EARLIER REVISION DATES

REVISION DATES (PRELIMINARY STAGE ONLY) 9/28/08 12/01/08 02/04/09 03/16/09 03/26/09 04/27/09

SHEET 2 OF 68

FILE => tbdrw0-b-gnotes01.add

USERNAME => friemard DATE PLOTTED => 28-OCT-2009 TIME PLOTTED => 11:18

DIST	COUNTY	ROUTE	POST MILES TOTAL PROJECT	SHEET No	TOTAL SHEETS
05	SCr	17	6.0/12.6	263	283

REGISTERED CIVIL ENGINEER 4-24-09 DATE

7-13-09
PLANS APPROVAL DATE

REGISTERED PROFESSIONAL ENGINEER T. Dudley No. C 039514 Exp. 12/31/09 CIVIL STATE OF CALIFORNIA

The State of California or its officers or agents shall not be responsible for the accuracy or completeness of electronic copies of this plan sheet.

LIM & NASCIMENTO ENGINEERING
20 EMPIRE DRIVE
LAKE FOREST, CALIFORNIA 92630

GENERAL NOTES
LOAD AND RESISTANCE FACTOR DESIGN

DESIGN: AASHTO LRFD BRIDGE DESIGN SPECIFICATIONS, 3rd EDITION, with Interims through 2005 and the CALTRANS AMENDMENTS v3.06.01; except that geotechnical design of deep foundations, bridge details taken from Standard Plans May 2006 and earlier versions, and Standard Bridge Details XS sheets are designed using Bridge Design Specifications (1996 AASHTO with Revisions by CALTRANS).

DESIGN (Foundations only): CALTRANS BRIDGE DESIGN SPECIFICATIONS

SEISMIC DESIGN: CALTRANS SEISMIC DESIGN CRITERIA (SDC) Version 1.4 dated June, 2006

DEAD LOAD: Includes 35 psf for future wearing surface.

LIVE LOADING: HL93 and low-boy and permit design loads

SEISMIC LOADING: CALTRANS SDC ARS Curve: ~~To be determined~~ Figure 8.9, Soil Profile Type D
Spectrum Peak Rock Acceleration = ~~To be determined~~ 0.7g 1

REINFORCED CONCRETE: f'_c = 4.0 ksi f_y = 60 ksi n = 8

SOIL NAIL WALL
LOAD FACTOR DESIGN

DESIGN: CALTRANS BRIDGE DESIGN SPECIFICATIONS - April 2000 (LFD) (1996 AASHTO with Interims and Revision by CALTRANS)

SHOTCRETE: f'_c = 3250 psi

STRUCTURAL STEEL: ASTM Designation: A709, Grade 36

SOIL NAILS: ASTM A615 or A706
Epoxy Coated, f_y = 60 ksi

SOIL PARAMETERS:
$\varnothing$ = 25° γ_m = 115 pcf c = 100 psf

Design Nail Pullout Resistance = 680 lb/ft, Static

SEISMIC LOADING: Horizontal Earth Load Acceleration = 0.2 g

LIVE LOAD: 240 psf

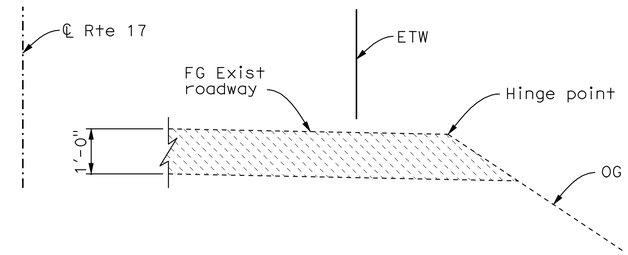

LIMITS OF STRUCTURE EXCAVATION (TYPE Z-2)
(AERIALLY DEPOSITED LEAD)

No scale

(Station limit 2200+95.00 - 2203+07.95)

Note: Existing highway improvements not shown for clarity.

SOLDIER PILE WALL, CONCRETE RETAINING WALL
LOAD FACTOR DESIGN

DESIGN: CALTRANS BRIDGE DESIGN SPECIFICATIONS - April 2000 (LFD) (1996 AASHTO with Interims and Revision by CALTRANS)

LIVE LOAD: Surcharge = 240 psf

SEISMIC DESIGN: CALTRANS SEISMIC DESIGN CRITERIA (SDC) Version 1.4 dated June, 2006

SOIL PARAMETERS: See Foundation Report for each retaining wall

REINFORCED CONCRETE (Typ, UON):

f'_c = 3.6 ksi (Concrete compressive strength at 28 days)
f_y = 60 ksi (Yield strength of reinforcement)

CIDH CONCRETE PILE:

f'_c = 4.0 ksi (Concrete compressive strength at 28 days)
f_y = 60 ksi (Yield strength of reinforcement)

STRUCTURAL STEEL:

Steel Piles - ASTM Designation: A709, Grade 50

Plates - ASTM Designation: A709, Grade 36 or A36

TIMBER: Treated Douglas Fir Grade No. 1 or Better
~~Stress Grade Lumber - F_b = 1,500 psi min - E = 1,300,000 psi min~~
Lagging members shall be sawn full size and pressure treated with preservative

- Structural Concrete, Bridge (4,000 psi)
- CIDH Concrete Pile (4,000 psi)
- Structural Approach Type EQ (10)

CONCRETE STRENGTH AND TYPE LIMITS SIDEHILL VIADUCT

NO SCALE

Note:
The Contractor shall verify all controlling field dimensions before ordering or fabricating any material.

1 REVISED PER ADDENDUM No. 1 DATED OCTOBER 29, 2009

DESIGN OVERSIGHT Wei An	DESIGN	BY T. Dudley	CHECKED R. Price
	DETAILS	BY S. Desalegn	CHECKED R. Price
SIGN OFF DATE	QUANTITIES	BY T. Dudley / M. Stiller	CHECKED E. Nevarez/S. Desalegn

PREPARED FOR THE STATE OF CALIFORNIA DEPARTMENT OF TRANSPORTATION

Stephen J. Mislinski
PROJECT ENGINEER

BRIDGE NO. 36-0114
POST MILE 10.95

SIDEHILL VIADUCT
GENERAL NOTES NO. 1

DESIGN DETAIL SHEET (ENGLISH) (REV. 2/25/05)

ORIGINAL SCALE IN INCHES FOR REDUCED PLANS 0 1 2 3

CU 05
EA 0L70U1

DISREGARD PRINTS BEARING EARLIER REVISION DATES

REVISION DATES (PRELIMINARY STAGE ONLY) 9/30/08 02/04/09 03/16/09 03/16/09 04/23/09 04/27/09

SHEET 3 OF 23

FILE => tbdshv-b-gnotes01.add

USERNAME => trlenard DATE PLOTTED => 28-OCT-2009 TIME PLOTTED => 11:18