DIST	COUNTY	ROUTE	POST MILES TOTAL PROJECT	SHEET No	TOTAL SHEETS
05	SCr	17	6.0/12.6	201	284

REGISTERED CIVIL ENGINEER — DATE 8/4/11

9-24-12
PLANS APPROVAL DATE

REGISTERED PROFESSIONAL ENGINEER — T. Dudley — No. C039514 — Exp. 12/31/11 — CIVIL — STATE OF CALIFORNIA

The State of California or its officers or agents shall not be responsible for the accuracy or completeness of electronic copies of this plan sheet.

AECOM TECHNICAL SERVICES, INC.
2020 L STREET, SUITE 300
SACRAMENTO, CALIFORNIA 95811

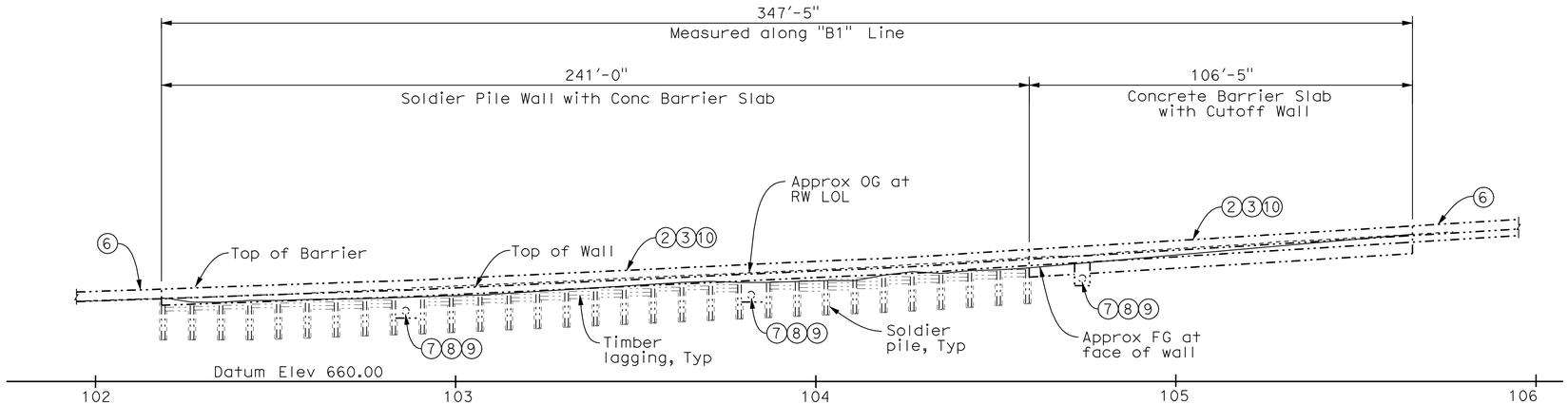

DEVELOPED ELEVATION

1" = 20'

QUANTITIES

GRADE BENCH TO FINISHED GRADE	154 SQYD
CONCRETE FINISHING	LUMP SUM
REPAIR COATING	LUMP SUM

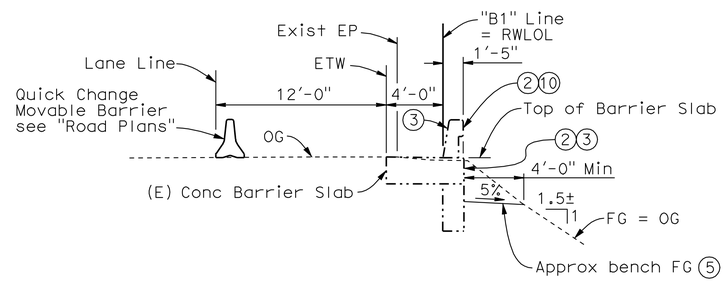

CONCRETE BARRIER SLAB WITH CUTOFF WALL

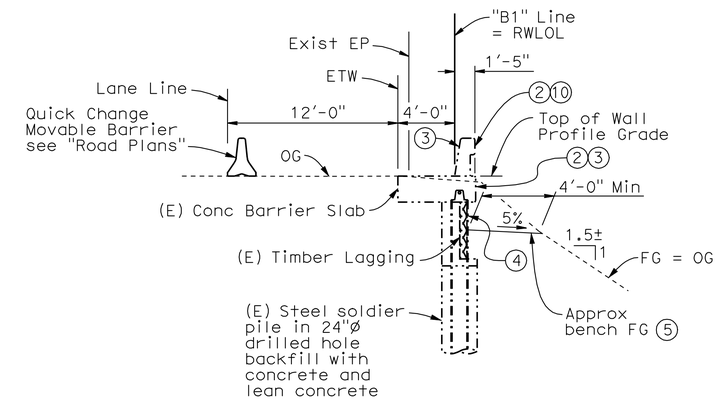

TYPICAL SECTIONS

3/16" = 1'-0"

CONCRETE BARRIER SLAB ON SOLDIER PILE WALL

CURVE DATA TABLE

	R	Δ	T	L
A	9003.98	1°46'47"	139.85	279.68

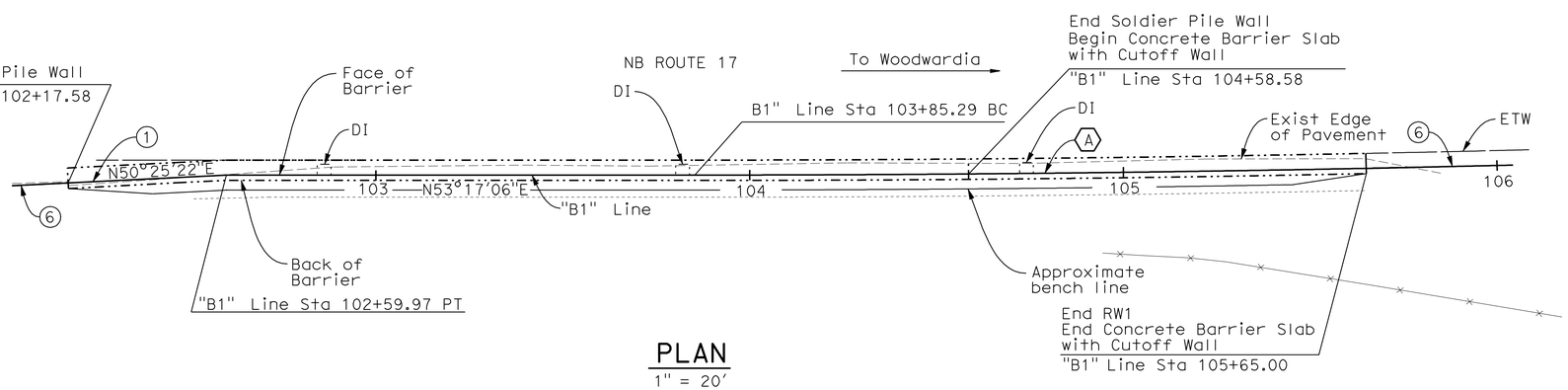

PLAN

1" = 20'

LEGEND:

1. Paint "Br No. 36E-0021"
2. Repair Spalls and Rock Pockets in Concrete Barrier Type 732 (MOD) and concrete barrier slab
3. Class 1 Surface Finish
4. Repair Coating on soldier Piles
5. Grade Bench to FG
6. Concrete Barrier Type 732B, see "Road Plans"
7. Drainage outlet, see "Road Plans"
8. Grout/fill around culvert outlet at face of drainage inlet walls
9. Install steps in drainage inlet
10. Grind high spots

Note:
The Contractor shall verify all controlling field dimensions before ordering or fabricating any material.

DESIGN OVERSIGHT — Wei An
8-10-11
SIGN OFF DATE

	BY	CHECKED			
DESIGN	T. Dudley	R. Price	LOAD & RESISTANCE FACTOR DESIGN	LIVE LOADING: HS20-44 AND ALTERNATIVE AND PERMIT DESIGN LOAD	
DETAILS	S. Desalegn	R. Price	LAYOUT	S. Desalegn	T. Dudley
QUANTITIES	T. Dudley / M. Stiller	E. Navarez/S. Desalegn	SPECIFICATIONS	T. Dudley	PLANS AND SPECS COMPARED

PREPARED FOR THE STATE OF CALIFORNIA DEPARTMENT OF TRANSPORTATION

Stephen Mislinski
PROJECT ENGINEER

BRIDGE NO. 36E-0021
POST MILES 6.04

RETAINING WALLS
RW NO. 1 GENERAL PLAN

DESIGN GENERAL PLAN SHEET (ENGLISH) (REV.2/25/05)

ORIGINAL SCALE IN INCHES FOR REDUCED PLANS 0 1 2 3

CU 05
EA OL7014

DISREGARD PRINTS BEARING EARLIER REVISION DATES

REVISION DATES (PRELIMINARY STAGE ONLY): 9/30/08 12/01/08 02/04/09 03/10/09 03/16/09 04/23/09 03/25/11 05/25/11 08/04/11 8-9-11

SHEET 4 OF 64

FILE => TBDRW01-a-gp01.dgn

USERNAME => s121614 DATE PLOTTED => 02-OCT-2012 TIME PLOTTED => 06:11

DIST	COUNTY	ROUTE	POST MILES TOTAL PROJECT	SHEET No	TOTAL SHEETS
05	SCr	17	6.0/12.6	202	284

REGISTERED CIVIL ENGINEER — DATE 8/4/11

9-24-12
PLANS APPROVAL DATE

REGISTERED PROFESSIONAL ENGINEER — T. Dudley — No. C039514 — Exp. 12/31/11 — CIVIL — STATE OF CALIFORNIA

The State of California or its officers or agents shall not be responsible for the accuracy or completeness of electronic copies of this plan sheet.

AECOM TECHNICAL SERVICES, INC.
2020 L STREET, SUITE 300
SACRAMENTO, CALIFORNIA 95811

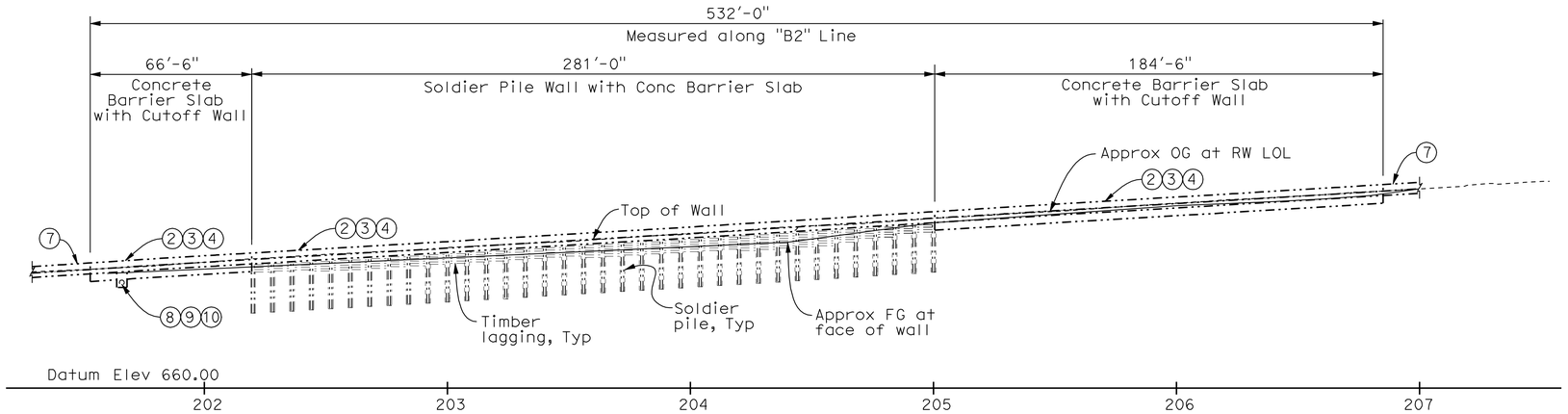

DEVELOPED ELEVATION

1" = 30'

QUANTITIES

GRADE BENCH TO FINISHED GRADE	236 SQYD
CONCRETE FINISHING	LUMP SUM
REPAIR COATING	LUMP SUM

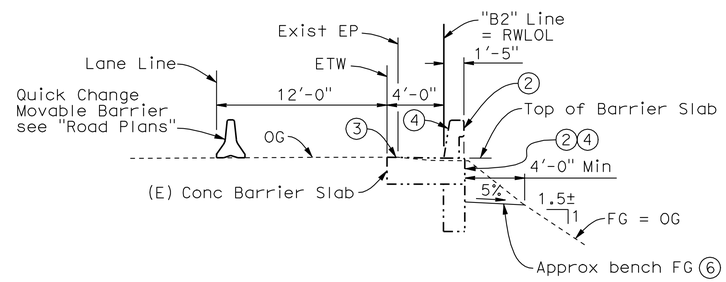

CONCRETE BARRIER SLAB WITH CUTOFF WALL

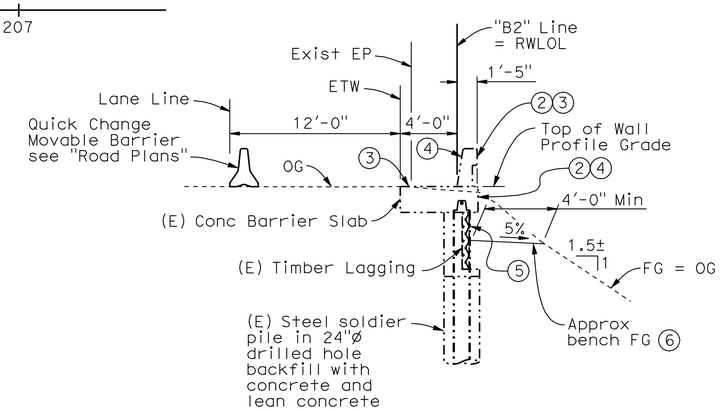

CONCRETE BARRIER SLAB ON SOLDIER PILE WALL

CURVE DATA TABLE

	R	Δ	T	L
A	500.00	2°37'16"	11.44	22.87
B	10,003.98	3°02'24"	265.46	530.79

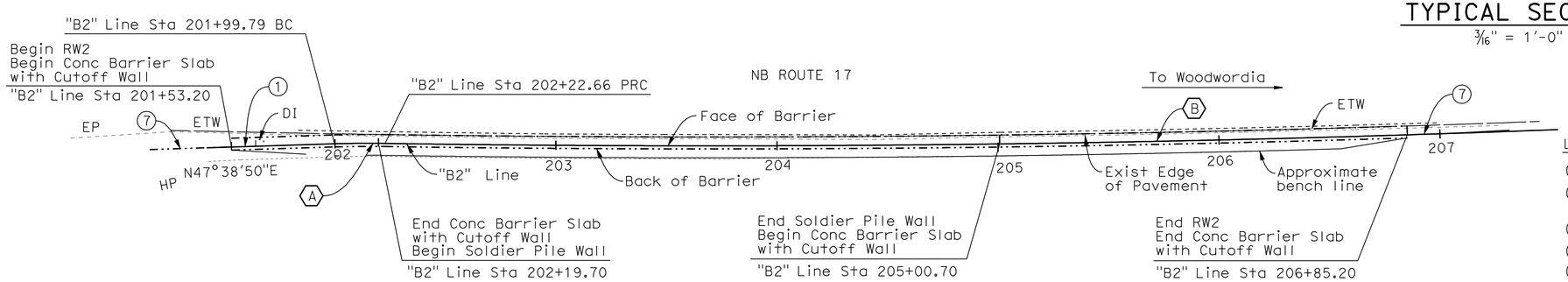

PLAN

1" = 30'

TYPICAL SECTION

3/16" = 1'-0"

LEGEND:

1. Paint "Br No. 36E-0022"
2. Repair Spalls and Rock Pockets in Concrete Barrier Type 732 (MOD) and concrete barrier slab
3. Grind High Spots
4. Class 1 Surface Finish
5. Repair Coating on Soldier Piles
6. Grade Bench to FG
7. Concrete Barrier Type 732B, see "Road Plans"
8. Drainage outlet, see "Road Plans"
9. Grout/fill around culvert outlet at face of drainage inlet walls
10. Install steps in drainage inlet

Note:
The Contractor shall verify all controlling field dimensions before ordering or fabricating any material.

DESIGN OVERSIGHT Wei An
8-10-11
SIGN OFF DATE

	BY	CHECKED			
DESIGN	T. Dudley	R. Price	LOAD & RESISTANCE FACTOR DESIGN	LIVE LOADING: HS20-44 AND ALTERNATIVE AND PERMIT DESIGN LOAD	
DETAILS	S. Desalegn	R. Price	LAYOUT	S. Desalegn	T. Dudley
QUANTITIES	T. Dudley / M. Stiller	E. Navarez/S. Desalegn	SPECIFICATIONS	T. Dudley	PLANS AND SPECS COMPARED

PREPARED FOR THE STATE OF CALIFORNIA DEPARTMENT OF TRANSPORTATION

Stephen Mislinski
PROJECT ENGINEER

BRIDGE NO. 36E-0022
POST MILES 6.20

RETAINING WALLS
RW NO. 2 GENERAL PLAN

DESIGN GENERAL PLAN SHEET (ENGLISH) (REV.2/25/05)

ORIGINAL SCALE IN INCHES FOR REDUCED PLANS 0 1 2 3

CU 05
EA OL7014

DISREGARD PRINTS BEARING EARLIER REVISION DATES

REVISION DATES (PRELIMINARY STAGE ONLY): 9/30/08 12/09/08 02/04/09 03/16/09 03/16/09 04/23/09 03/28/11 05/25/11 08/04/11 8-9-11

SHEET 5 OF 64

FILE => TBDRW02-a-gp01.dgn

USERNAME => s121614 DATE PLOTTED => 02-OCT-2012 TIME PLOTTED => 06:11

DIST	COUNTY	ROUTE	POST MILES TOTAL PROJECT	SHEET No	TOTAL SHEETS
05	SCr	17	6.0/12.6	203	284

REGISTERED CIVIL ENGINEER — DATE 8/4/11

9-24-12
PLANS APPROVAL DATE

REGISTERED PROFESSIONAL ENGINEER — T. Dudley — No. C039514 — Exp. 12/31/11 — CIVIL — STATE OF CALIFORNIA

The State of California or its officers or agents shall not be responsible for the accuracy or completeness of electronic copies of this plan sheet.

AECOM TECHNICAL SERVICES, INC.
2020 L STREET, SUITE 300
SACRAMENTO, CALIFORNIA 95811

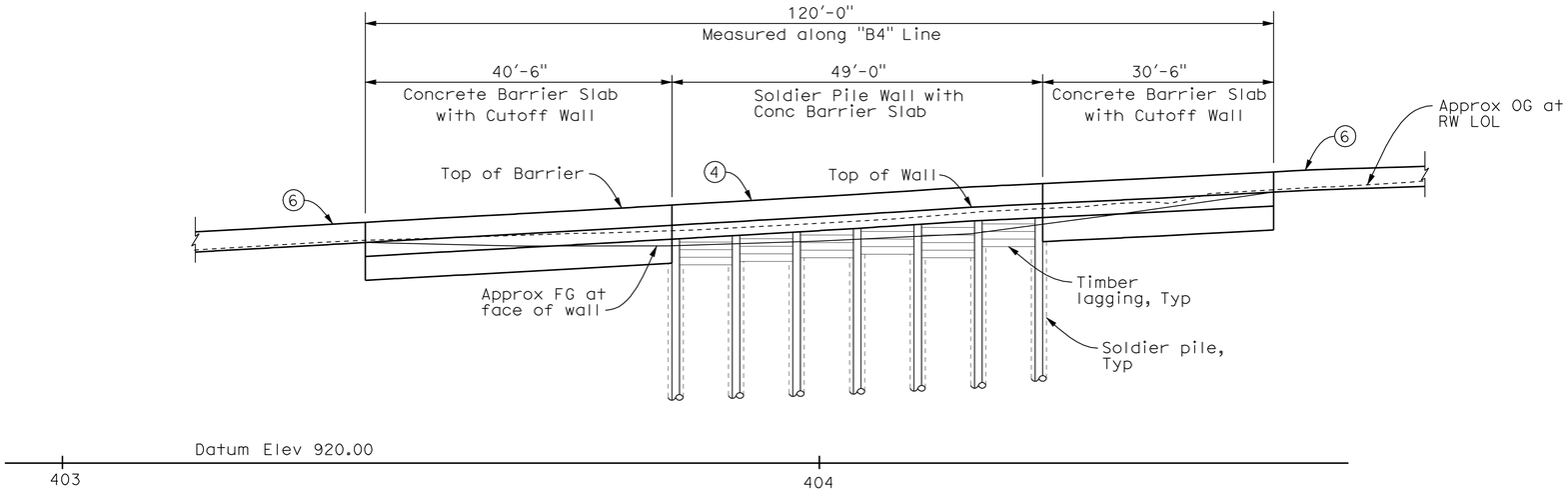

DEVELOPED MIRROR ELEVATION

1" = 10'

QUANTITIES

24" DRILLED HOLE	136	LF
STRUCTURE EXCAVATION (SOLDIER PILE WALL)	16	CY
STRUCTURE EXCAVATION (TYPE Z-2)	74	CY
(AERIALLY DEPOSITED LEAD)		
STRUCTURE BACKFILL (SOLDIER PILE WALL)	5	CY
CONCRETE BACKFILL	11	CY
LEAN CONCRETE BACKFILL	3	CY
INSTALL STEEL SOLDIER PILING	7	EA
STRUCTURAL CONCRETE, BARRIER SLAB	57	CY
INSTALL TIMBER LAGGING	LUMP	SUM
CLEAN AND PAINT STEEL	LUMP	SUM
SOLDIER PILING		
CONCRETE BARRIER (TYPE 732 MODIFIED)	120	LF

CURVE DATA TABLE

	R	Δ	T	L
A	1604.00	12°35'52"	177.05	352.68

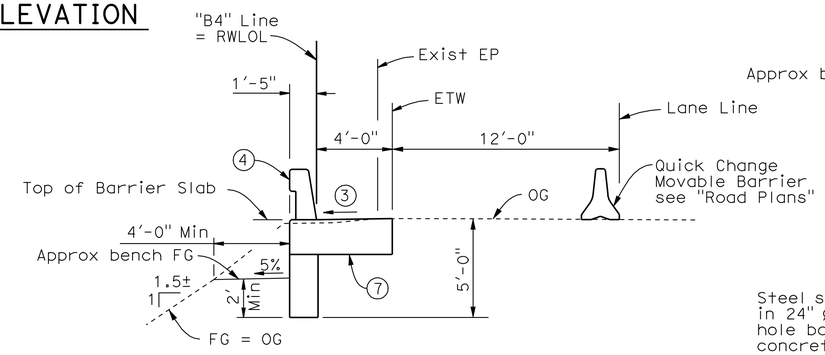

CONCRETE BARRIER SLAB WITH CUTOFF WALL

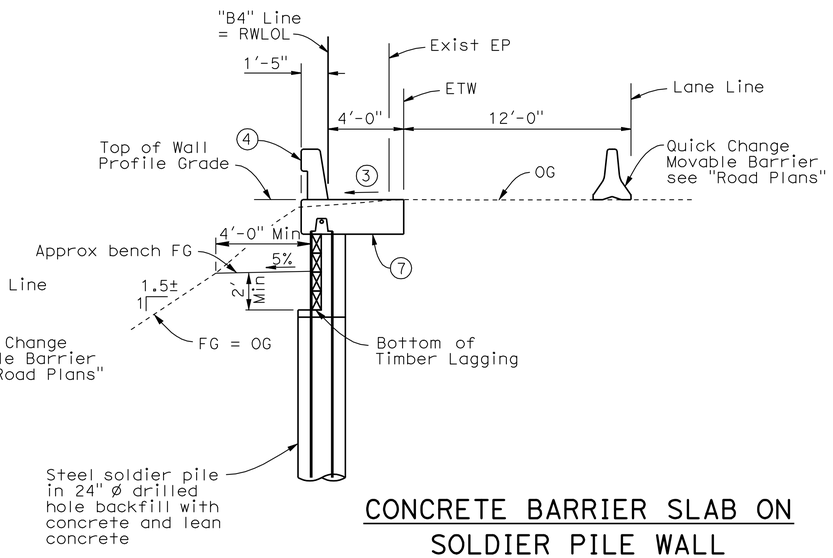

CONCRETE BARRIER SLAB ON SOLDIER PILE WALL

TYPICAL SECTIONS

¼" = 1'-0"

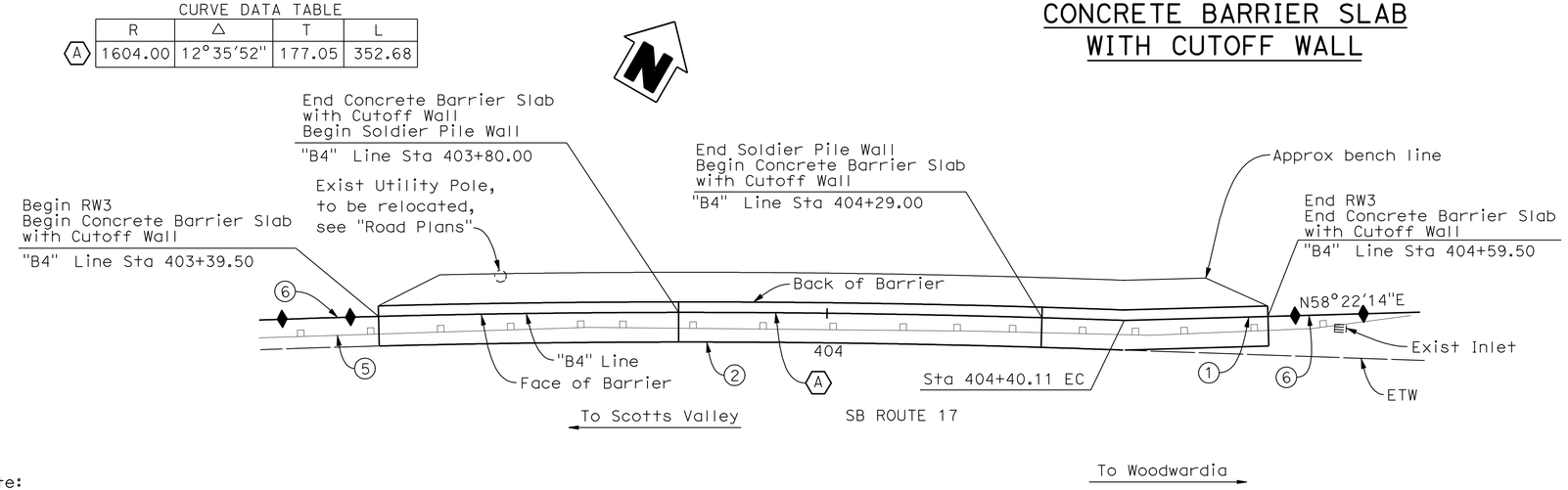

PLAN

1" = 10'

LEGEND:

1. Paint "Br No. 36E-0023"
2. Soldier Pile Wall with Concrete Barrier Slab
3. Match existing cross slope
4. Concrete Barrier Type 732 (MOD)
5. Exist MBGR to be removed, see "Road Plans"
6. Concrete Barrier Type 732B, see "Road Plans"
7. Concrete Barrier Slab

Note:
The Contractor shall verify all controlling field dimensions before ordering or fabricating any material.

DESIGN OVERSIGHT Wei An	DESIGN	BY T. Dudley	CHECKED R. Price	LOAD & RESISTANCE FACTOR DESIGN	LIVE LOADING: HS20-44 AND ALTERNATIVE AND PERMIT DESIGN LOAD
8-10-11 SIGN OFF DATE	DETAILS	BY S. Desalegn	CHECKED R. Price	LAYOUT BY S. Desalegn	CHECKED T. Dudley
	QUANTITIES	BY T. Dudley / M. Stiller	CHECKED E. Navarez/S. Desalegn	SPECIFICATIONS BY	PLANS AND SPECS COMPARED

PREPARED FOR THE STATE OF CALIFORNIA DEPARTMENT OF TRANSPORTATION

Stephen Mislinski
PROJECT ENGINEER

BRIDGE NO. 36E-0023
POST MILES 6.90

RETAINING WALLS
RW NO. 3 GENERAL PLAN

DESIGN GENERAL PLAN SHEET (ENGLISH) (REV.2/25/05)

ORIGINAL SCALE IN INCHES FOR REDUCED PLANS 0 1 2 3

CU 05
EA OL7014

DISREGARD PRINTS BEARING EARLIER REVISION DATES

REVISION DATES (PRELIMINARY STAGE ONLY): 9/30/08 12/09/08 02/04/09 03/06/09 03/16/09 04/23/09 05/28/11 05/28/11 08/04/11 8-9-11

SHEET 6 OF 64

FILE => TBDRW03-a-gp01.dgn

USERNAME => s124496 DATE PLOTTED => 01-OCT-2012 TIME PLOTTED => 06:31

DIST	COUNTY	ROUTE	POST MILES TOTAL PROJECT	SHEET No	TOTAL SHEETS
05	SCr	17	6.0/12.6	204	284

REGISTERED CIVIL ENGINEER — DATE 8/4/11

9-24-12
PLANS APPROVAL DATE

REGISTERED PROFESSIONAL ENGINEER — T. Dudley — No. C039514 — Exp. 12/31/11 — CIVIL — STATE OF CALIFORNIA

The State of California or its officers or agents shall not be responsible for the accuracy or completeness of electronic copies of this plan sheet.

AECOM TECHNICAL SERVICES, INC.
2020 L STREET, SUITE 300
SACRAMENTO, CALIFORNIA 95811

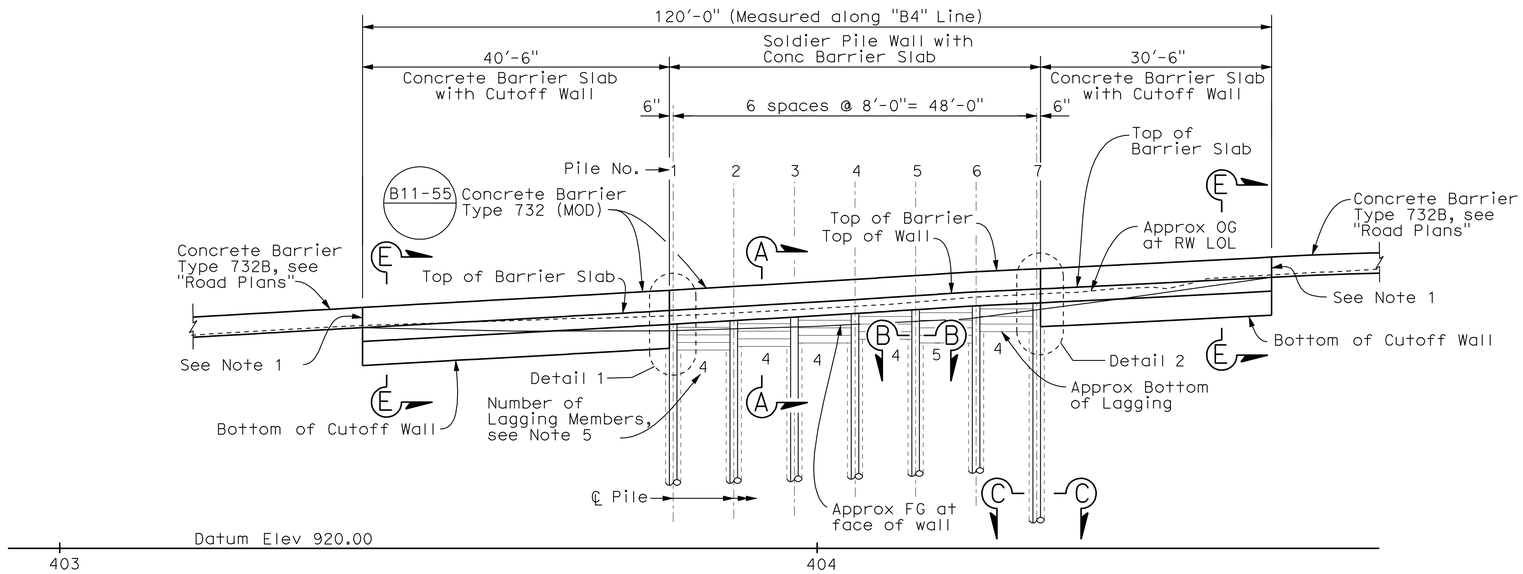

DEVELOPED MIRROR ELEVATION

1" = 10'

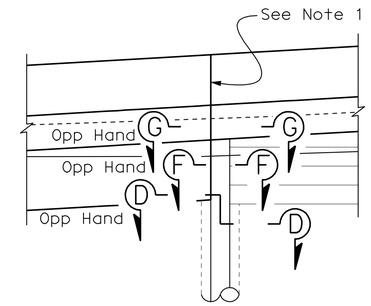

DETAIL 1

1/4" = 1'-0"

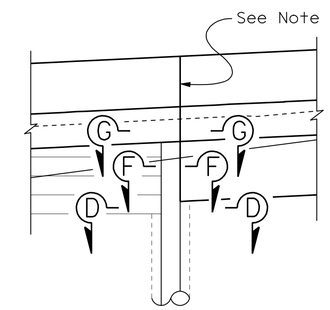

DETAIL 2

1/4" = 1'-0"

Notes:

1. Longitudinal reinforcement for barrier shall be continuous through joint.
2. For Section A-A, see "Details No. 1" sheet.
3. For Section B-B, Section C-C and Section D-D, see "Details No. 2" sheet.
4. For Section E-E, Section F-F and Section G-G, see "Details No. 3" sheet.
5. Number of lagging members shown are approximate only. Contractor shall install lagging to a depth of 2 feet below the finished grade at the face of the Soldier Pile Wall.

Note:
The Contractor shall verify all controlling field dimensions before ordering or fabricating any material.

DESIGN OVERSIGHT Wei An
SIGN OFF DATE

	BY	CHECKED
DESIGN	T. Dudley	R. Price
DETAILS	S. Desalegn	R. Price
QUANTITIES	T. Dudley / M. Stiller	E. Nevarez/S. Desalegn

PREPARED FOR THE STATE OF CALIFORNIA DEPARTMENT OF TRANSPORTATION

Stephen J. Mislinski
PROJECT ENGINEER

BRIDGE NO. 36E-0023
POST MILE 6.90

RETAINING WALLS
RW NO. 3 STRUCTURE PLAN

DESIGN DETAIL SHEET (ENGLISH) (REV. 2/25/05)

ORIGINAL SCALE IN INCHES FOR REDUCED PLANS 0 1 2 3

CU 05
EA 0L7014

DISREGARD PRINTS BEARING EARLIER REVISION DATES

REVISION DATES (PRELIMINARY STAGE ONLY): 9/28/08 12/01/08 02/04/09 03/10/09 03/16/09 04/23/09 03/25/11 05/25/11 08/04/11

SHEET 7 OF 64

FILE => TBDRW03-c-sp01.dgn

USERNAME => s124496 DATE PLOTTED => 01-OCT-2012 TIME PLOTTED => 06:31

DIST	COUNTY	ROUTE	POST MILES TOTAL PROJECT	SHEET No	TOTAL SHEETS
05	SCr	17	6.0/12.6	205	284

REGISTERED CIVIL ENGINEER — DATE 8/4/11

9-24-12
PLANS APPROVAL DATE

REGISTERED PROFESSIONAL ENGINEER — T. Dudley — No. C039514 — Exp. 12/31/11 — CIVIL — STATE OF CALIFORNIA

The State of California or its officers or agents shall not be responsible for the accuracy or completeness of electronic copies of this plan sheet.

AECOM TECHNICAL SERVICES, INC.
2020 L STREET, SUITE 300
SACRAMENTO, CALIFORNIA 95811

BENCH MARK

SUHV PM6.82 (Not Shown on Sheet)
N = 1853333.775,
E = 6127594.205,
Elev = 919.240

SUHV PM6.99 (Not Shown on Sheet)
N = 1853772.698,
E = 6128221.327,
Elev = 962.885

CURVE DATA TABLE

	R	Δ	T	L
A	1604.00	12°35'52"	177.05	352.68

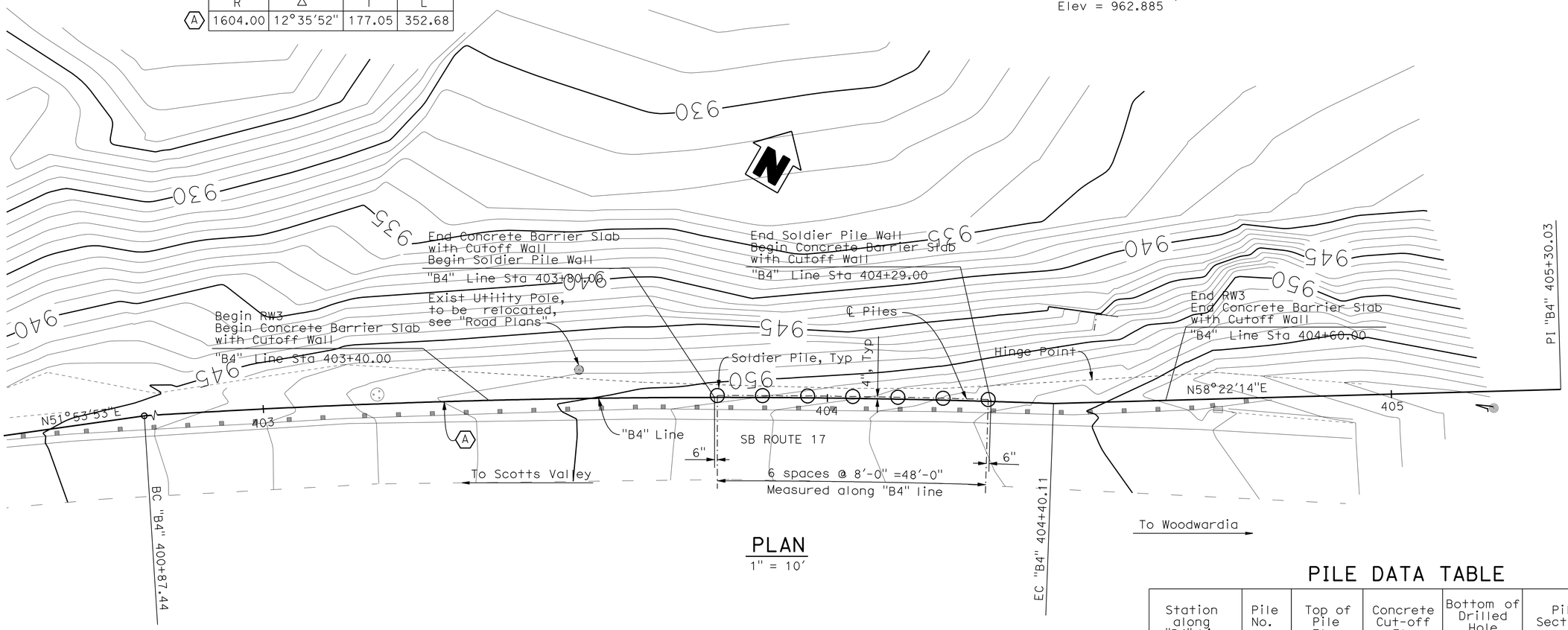

PLAN
1" = 10'

PILE DATA TABLE

Station along "B4" Line	Pile No.	Top of Pile Elev	Concrete Cut-off Elev	Bottom of Drilled Hole Elev	Pile Section	Finished Grade Bench Elev
(ft)		(ft)	(ft)	(ft)		(ft)
403+80.5	1	950.23	948.90	931.98	W12x65	951.40
403+88.5	2	950.70	948.90	932.45	W12x65	951.87
403+96.5	3	951.16	947.01	932.91	W12x65	952.33
404+04.5	4	951.65	947.01	933.40	W12x65	949.51
404+12.5	5	952.15	947.01	933.90	W12x65	949.91
404+20.5	6	952.64	947.41	934.39	W12x65	950.35
404+28.5	7	953.03	947.85	934.78	W12x65	951.34

Note:
The Contractor shall verify all controlling field dimensions before ordering or fabricating any material.

GEOTECHNICAL PROFESSIONAL APPROVAL DATE

DESIGN OVERSIGHT Wei An
SIGN OFF DATE

SCALE: As Shown | VERT.DATUM NAVD 1988 | HORZ.DATUM NAD 1983
PHOTOGRAMMETRY AS OF: X | ALIGNMENT TIES Dist. Traverse Sheet
SURVEYED BY X | DRAFTED BY X
FIELD CHECKED BY X | CHECKED BY X

DESIGN BY T. Dudley CHECKED R. Price
DETAILS BY S. Desalegn CHECKED R. Price
QUANTITIES BY T. Dudley / M. Stiller CHECKED E. Navarez/S. Desalegn

PREPARED FOR THE STATE OF CALIFORNIA DEPARTMENT OF TRANSPORTATION

Stephen J. Mislinski
PROJECT ENGINEER

BRIDGE NO. 36E-0023
POST MILE 6.90

RETAINING WALLS
RW NO. 3 FOUNDATION PLAN

DESIGN DETAIL SHEET (ENGLISH) (REV. 2/25/05)

ORIGINAL SCALE IN INCHES FOR REDUCED PLANS 0 1 2 3

CU 05
EA 0L7014

DISREGARD PRINTS BEARING EARLIER REVISION DATES
REVISION DATES (PRELIMINARY STAGE ONLY) 9/30/08 12/01/08 02/04/09 03/16/09 03/16/09 04/23/09 03/28/11 05/25/11 08/04/11

SHEET 8 OF 64

FILE => TBDRW03-e-fdp101.dgn

USERNAME => s124496 DATE PLOTTED => 01-OCT-2012 TIME PLOTTED => 06:31

DIST	COUNTY	ROUTE	POST MILES TOTAL PROJECT	SHEET No	TOTAL SHEETS
05	SCr	17	6.0/12.6	206	284

REGISTERED CIVIL ENGINEER — DATE 8/4/11

9-24-12
PLANS APPROVAL DATE

REGISTERED PROFESSIONAL ENGINEER — T. Dudley — No. C039514 — Exp. 12/31/11 — CIVIL — STATE OF CALIFORNIA

The State of California or its officers or agents shall not be responsible for the accuracy or completeness of electronic copies of this plan sheet.

AECOM TECHNICAL SERVICES, INC.
2020 L STREET, SUITE 300
SACRAMENTO, CALIFORNIA 95811

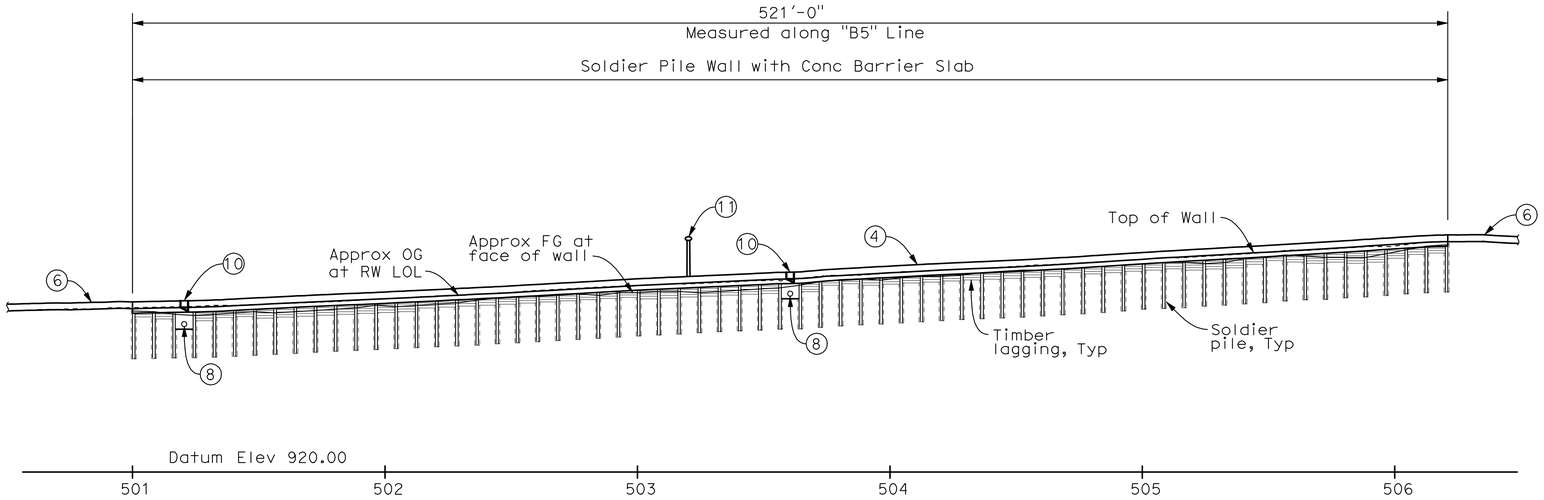

DEVELOPED MIRROR ELEVATION

1" = 30'

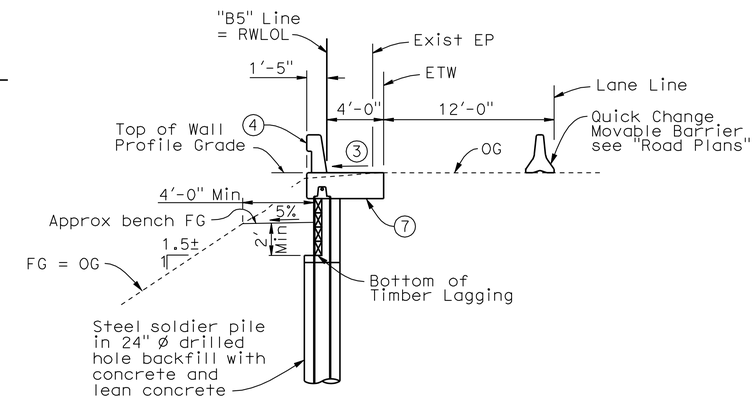

TYPICAL SECTION

1/8" = 1'-0"

QUANTITIES

24" DRILLED HOLE	1,480	LF
STRUCTURE EXCAVATION (SOLDIER PILE WALL)	164	CY
STRUCTURE EXCAVATION (TYPE Z-2) (AERIALLY DEPOSITED LEAD)	312	CY
STRUCTURE BACKFILL (SOLDIER PILE WALL)	48	CY
CONCRETE BACKFILL	125	CY
LEAN CONCRETE BACKFILL	27	CY
INSTALL STEEL SOLDIER PILING	66	EA
STRUCTURAL CONCRETE, BARRIER SLAB	192	CY
MINOR CONCRETE (DRAINAGE INLET)	3	CY
INSTALL TIMBER LAGGING	LUMP	SUM
TIMBER LAGGING	5	MFBM
CLEAN AND PAINT STEEL SOLDIER PILING	LUMP	SUM
MISCELLANEOUS IRON AND STEEL	478	LB
MISCELLANEOUS METAL (MAINTENANCE PLATFORM)	633	LB
CONCRETE BARRIER (TYPE 732 MODIFIED)	521	LF

CURVE DATA TABLE

	R	Δ	T	L
A	2995.99	0°40'59"	17.86	35.72
B	50.00	31°53'32"	14.29	27.83

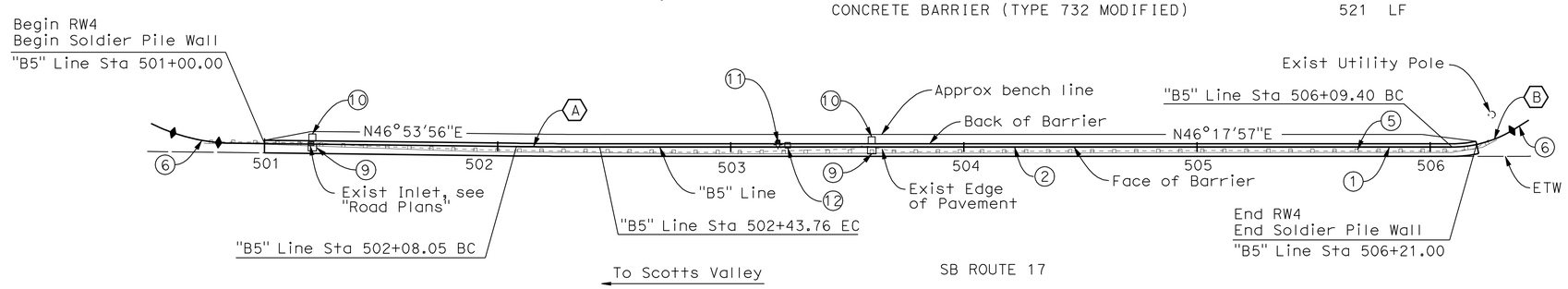

PLAN

1" = 30'

LEGEND:

1. Paint "Br No. 36E-0024"
2. Soldier Pile Wall with Concrete Barrier Slab
3. Match existing cross slope
4. Concrete Barrier Type 732 (MOD)
5. Exist MBGR to be removed, see "Road Plans"
6. Concrete Barrier Type 732B, see "Road Plans"
7. Concrete Barrier Slab
8. Drainage outlet, see "Road Plans"
9. Drainage inlet, see "Drainage Inlet Details" sheet
10. Maintenance platform, see "Maintenance Platform Details No. 1" sheet
11. Lighting Standard Type 15-88, Relocate to top of Concrete Barrier, See "Electrical Plans"
12. Electrical Pull Box, see "Road Plans"

Note:
The Contractor shall verify all controlling field dimensions before ordering or fabricating any material.

DESIGN OVERSIGHT — Wei An
8-10-11
SIGN OFF DATE

	BY	CHECKED		BY	CHECKED
DESIGN	T. Dudley	R. Price	LOAD & RESISTANCE FACTOR DESIGN — LIVE LOADING: HS20-44 AND ALTERNATIVE AND PERMIT DESIGN LOAD		
DETAILS	S. Desalegn	R. Price	LAYOUT	S. Desalegn	T. Dudley
QUANTITIES	T. Dudley / M. Stiller	E. Navarez/S. Desalegn	SPECIFICATIONS	T. Dudley	PLANS AND SPECS COMPARED

PREPARED FOR THE STATE OF CALIFORNIA DEPARTMENT OF TRANSPORTATION

Stephen Mislinski
PROJECT ENGINEER

BRIDGE NO. 36E-0024
POST MILES 7.38

RETAINING WALLS
RW NO. 4 GENERAL PLAN

DESIGN GENERAL PLAN SHEET (ENGLISH) (REV.2/25/05)

ORIGINAL SCALE IN INCHES FOR REDUCED PLANS 0 1 2 3

CU 05
EA OL7014

DISREGARD PRINTS BEARING EARLIER REVISION DATES

REVISION DATES (PRELIMINARY STAGE ONLY): 9/30/08 12/01/08 02/04/09 03/10/09 03/16/09 04/23/09 03/28/11 05/25/11 08/04/11 8-9-11

SHEET 9 OF 64

FILE => TBDRW04-a-gp01.dgn

USERNAME => s124496 DATE PLOTTED => 01-OCT-2012 TIME PLOTTED => 06:31

DIST	COUNTY	ROUTE	POST MILES TOTAL PROJECT	SHEET No	TOTAL SHEETS
05	SCr	17	6.0/12.6	207	284

REGISTERED CIVIL ENGINEER 8/4/11 DATE

9-24-12
PLANS APPROVAL DATE

REGISTERED PROFESSIONAL ENGINEER T. Dudley No. C039514 Exp. 12/31/11 CIVIL STATE OF CALIFORNIA

The State of California or its officers or agents shall not be responsible for the accuracy or completeness of electronic copies of this plan sheet.

AECOM TECHNICAL SERVICES, INC.
2020 L STREET, SUITE 300
SACRAMENTO, CALIFORNIA 95811

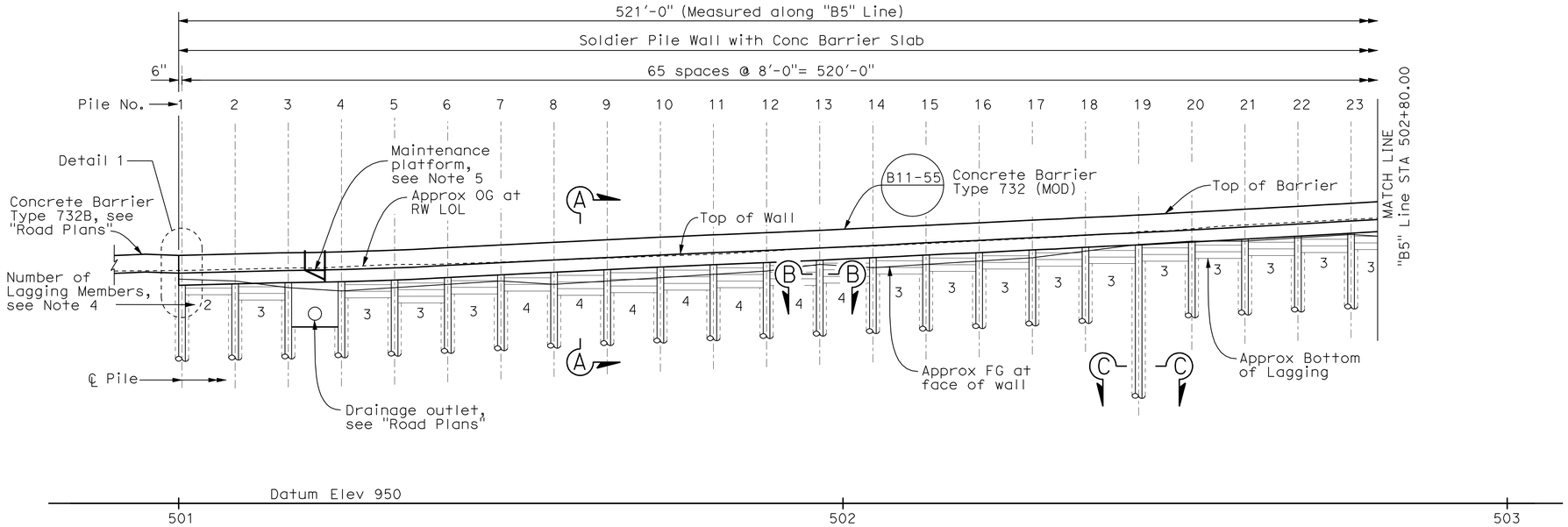

DEVELOPED MIRROR ELEVATION

1" = 10'

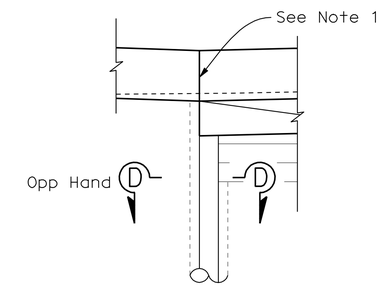

DETAIL 1

1/4" = 1'-0"

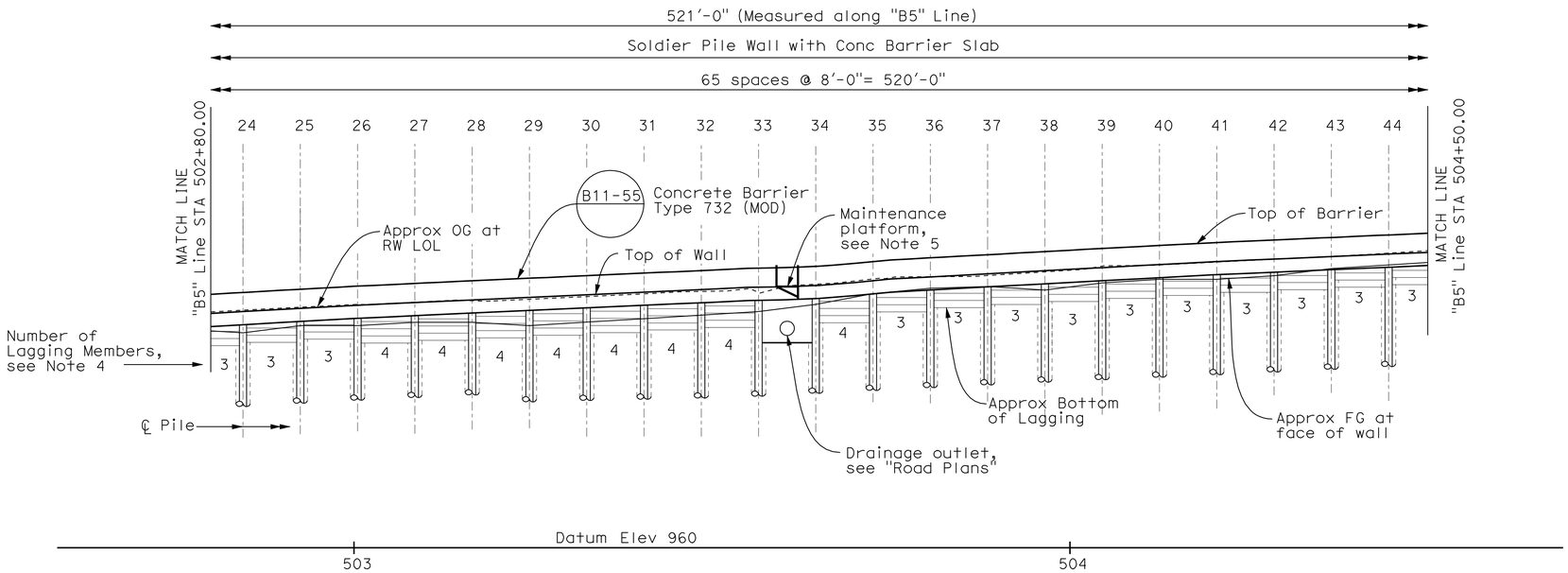

DEVELOPED MIRROR ELEVATION

1" = 10'

Notes:

1. Longitudinal reinforcement for barrier shall be continuous through joint.
2. For Section A-A, see "Details No. 1" sheet.
3. For Section B-B, Section C-C and Section D-D, see "Details No. 2" sheet.
4. Number of lagging members shown are approximate only. Contractor shall install lagging to a depth of 2 feet below the finished grade at the face of the Soldier Pile Wall.
5. For Maintenance Platform Details, see "Maintenance Platform Details No. 1" sheet.

Note:
The Contractor shall verify all controlling field dimensions before ordering or fabricating any material.

DESIGN OVERSIGHT Wei An
SIGN OFF DATE

	BY	CHECKED
DESIGN	T. Dudley	R. Price
DETAILS	S. Desalegn	R. Price
QUANTITIES	T. Dudley / M. Stiller	E. Nevarez/S. Desalegn

PREPARED FOR THE STATE OF CALIFORNIA DEPARTMENT OF TRANSPORTATION

Stephen J. Mislinski
PROJECT ENGINEER

BRIDGE NO. 36E-0024
POST MILE 7.38

RETAINING WALLS
RW NO. 4 STRUCTURE PLAN NO. 1

DESIGN DETAIL SHEET (ENGLISH) (REV. 2/25/05)

ORIGINAL SCALE IN INCHES FOR REDUCED PLANS 0 1 2 3

CU 05
EA 0L7014

DISREGARD PRINTS BEARING EARLIER REVISION DATES

REVISION DATES (PRELIMINARY STAGE ONLY) 9/30/08 12/09/08 02/04/09 03/10/09 03/16/09 04/23/09 03/28/11 05/25/11 08/04/11

SHEET 10 OF 64

FILE => TBDRW04-c-sp01.dgn

USERNAME => s124496 DATE PLOTTED => 01-OCT-2012 TIME PLOTTED => 06:32

DIST	COUNTY	ROUTE	POST MILES TOTAL PROJECT	SHEET No	TOTAL SHEETS
05	SCr	17	6.0/12.6	208	284

REGISTERED CIVIL ENGINEER — DATE 8/4/11

9-24-12
PLANS APPROVAL DATE

REGISTERED PROFESSIONAL ENGINEER — T. Dudley — No. C039514 — Exp. 12/31/11 — CIVIL — STATE OF CALIFORNIA

The State of California or its officers or agents shall not be responsible for the accuracy or completeness of electronic copies of this plan sheet.

AECOM TECHNICAL SERVICES, INC.
2020 L STREET, SUITE 300
SACRAMENTO, CALIFORNIA 95811

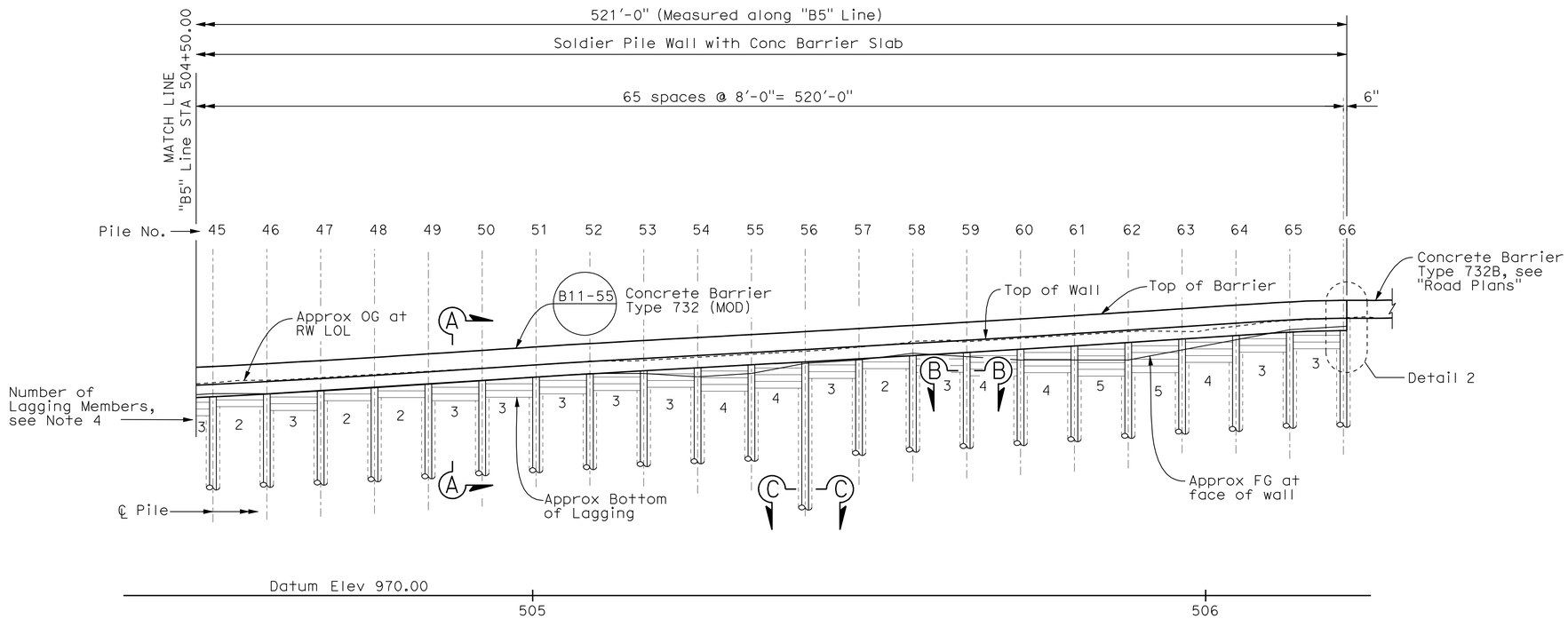

DEVELOPED MIRROR ELEVATION

1" = 10'

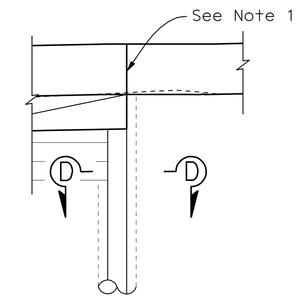

DETAIL 2

1/4" = 1'-0"

Notes:

1. Longitudinal reinforcement for barrier shall be continuous through joint.
2. For Section A-A, see "Details No. 1" sheet.
3. For Section B-B, Section C-C and Section D-D, see "Details No. 2" sheet.
4. Number of lagging members shown are approximate only. Contractor shall install lagging to a depth of 2 feet below the finished grade at the face of the Soldier Pile Wall.

Note:
The Contractor shall verify all controlling field dimensions before ordering or fabricating any material.

DESIGN OVERSIGHT Wei An
SIGN OFF DATE

	BY	CHECKED
DESIGN	T. Dudley	R. Price
DETAILS	S. Desalegn	R. Price
QUANTITIES	T. Dudley / M. Stiller	E. Nevarez/S. Desalegn

PREPARED FOR THE STATE OF CALIFORNIA DEPARTMENT OF TRANSPORTATION

Stephen J. Mislinski
PROJECT ENGINEER

BRIDGE NO. 36E-0024
POST MILE 7.38

RETAINING WALLS
RW NO. 4 STRUCTURE PLAN NO. 2

DESIGN DETAIL SHEET (ENGLISH) (REV. 2/25/05)

ORIGINAL SCALE IN INCHES FOR REDUCED PLANS 0 1 2 3

CU 05
EA 0L7014

DISREGARD PRINTS BEARING EARLIER REVISION DATES

REVISION DATES (PRELIMINARY STAGE ONLY): 9/28/08 12/09/08 02/04/09 03/10/09 03/16/09 04/27/09 03/25/11 05/25/11 08/04/11

SHEET 11 OF 64

FILE => TBDRW04-c-sp02.dgn

USERNAME => s124496 DATE PLOTTED => 01-OCT-2012 TIME PLOTTED => 06:32

DIST	COUNTY	ROUTE	POST MILES TOTAL PROJECT	SHEET No	TOTAL SHEETS
05	SCr	17	6.0/12.6	209	284

REGISTERED CIVIL ENGINEER — DATE 8/4/11

9-24-12
PLANS APPROVAL DATE

REGISTERED PROFESSIONAL ENGINEER — T. Dudley — No. C039514 — Exp. 12/31/11 — CIVIL — STATE OF CALIFORNIA

The State of California or its officers or agents shall not be responsible for the accuracy or completeness of electronic copies of this plan sheet.

AECOM TECHNICAL SERVICES, INC.
2020 L STREET, SUITE 300
SACRAMENTO, CALIFORNIA 95811

BENCH MARK

PM7.32
5.79' Lt of "B5" Line
Sta 500+85.27
N= 1854379.824,
E= 6129757.973,
ELEV= 984.122

PM7.43 (Not Shown on Sheet)
121.86' Rt of "B5" Line
Sta 506+91.07
N= 1854782.750,
E= 6130286.722,
ELEV= 1018.902

CURVE DATA TABLE

	R	Δ	T	L
A	2995.99	0°40'59"	17.86	35.72
B	50.00	31°53'32"	14.29	27.83

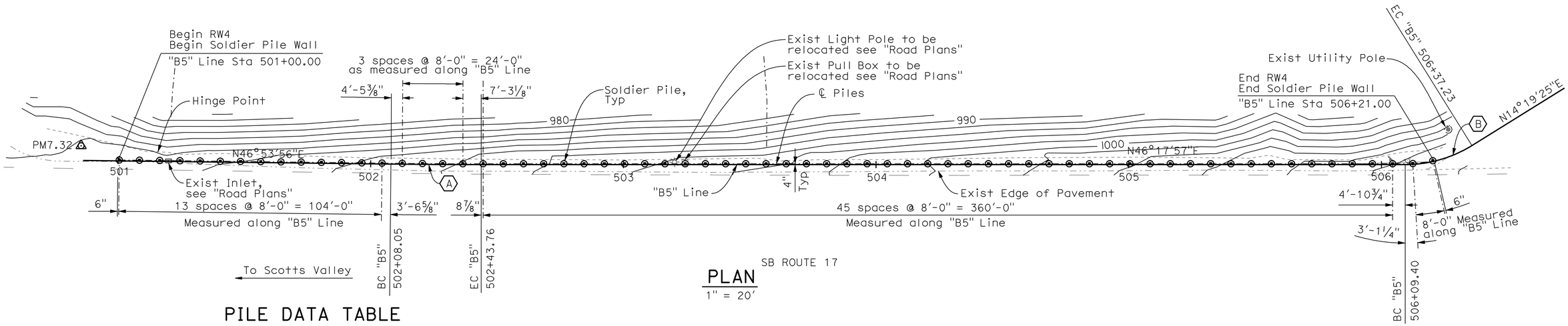

SB ROUTE 17

PLAN
1" = 20'

PILE DATA TABLE

Station along "B5" Line	Pile No.	Top of Pile Elev	Concrete Cut-off Elev	Bottom of Drilled Hole Elev	Pile Section	Finished Grade Bench Elev
(ft)		(ft)	(ft)	(ft)		(ft)
501+00.50	1	983.42	981.02	962.17	W12x65	984.73
501+08.50	2	983.60	979.90	962.35	W12x65	983.52
501+16.50	3	983.77	979.90	962.52	W12x65	982.40
501+24.50	4	984.01	979.90	962.76	W12x65	982.55
501+32.50	5	984.29	980.05	963.04	W12x65	983.11
501+40.50	6	984.57	980.61	963.32	W12x65	983.35
501+48.50	7	984.97	980.85	963.72	W12x65	983.58
501+56.50	8	985.37	981.08	964.12	W12x65	983.82
501+64.50	9	985.75	981.32	964.50	W12x65	984.06
501+72.50	10	986.12	981.56	964.87	W12x65	984.36
501+80.50	11	986.49	981.86	965.24	W12x65	984.88
501+88.50	12	986.84	982.38	965.59	W12x65	985.32
501+96.50	13	987.20	982.82	965.95	W12x65	985.76
502+04.50	14	987.56	983.26	966.31	W12x65	986.19
502+12.50	15	987.94	983.69	966.69	W12x65	986.73
502+20.50	16	988.32	984.23	967.07	W12x65	987.33
502+28.50	17	988.72	984.83	967.47	W12x65	987.93
502+36.50	18	989.12	985.43	967.87	W12x65	988.19
502+44.50	19	989.53	985.69	968.28	W12x65	988.98
502+52.50	20	989.94	986.48	968.69	W12x65	989.58
502+60.50	21	990.36	987.08	969.11	W12x65	990.00
502+68.50	22	990.81	987.50	969.56	W12x65	990.05

Station along "B5" Line	Pile No.	Top of Pile Elev	Concrete Cut-off Elev	Bottom of Drilled Hole Elev	Pile Section	Finished Grade Bench Elev
(ft)		(ft)	(ft)	(ft)		(ft)
502+76.50	23	991.25	987.55	970.00	W12x65	990.31
502+84.50	24	991.70	987.81	970.45	W12x65	990.73
502+92.50	25	992.16	988.23	970.91	W12x65	990.97
503+00.50	26	992.60	988.47	971.35	W12x65	991.21
503+08.50	27	992.96	988.71	971.71	W12x65	991.44
503+16.50	28	993.32	988.94	972.07	W12x65	991.65
503+24.50	29	993.68	989.15	972.43	W12x65	991.92
503+32.50	30	994.05	989.42	972.80	W12x65	992.18
503+40.50	31	994.41	989.68	973.16	W12x65	992.33
503+48.50	32	994.72	989.83	973.47	W12x65	992.46
503+56.50	33	995.04	989.96	973.79	W12x65	992.96
503+64.50	34	995.48	990.46	974.23	W12x65	993.84
503+72.50	35	996.02	991.34	974.77	W12x65	995.05
503+80.50	36	996.55	992.55	975.30	W12x65	995.61
503+88.50	37	996.98	993.11	975.73	W12x65	996.08
503+96.50	38	997.42	993.58	976.17	W12x65	996.88
504+04.50	39	997.85	994.38	976.60	W12x65	997.41
504+12.50	40	998.27	994.91	977.02	W12x65	997.80
504+20.50	41	998.69	995.30	977.44	W12x65	998.08
504+28.50	42	999.04	995.58	977.79	W12x65	998.47
504+36.50	43	999.40	995.97	978.15	W12x65	998.91
504+44.50	44	999.76	996.41	978.51	W12x65	999.37

Station along "B5" Line	Pile No.	Top of Pile Elev	Concrete Cut-off Elev	Bottom of Drilled Hole Elev	Pile Section	Finished Grade Bench Elev
(ft)		(ft)	(ft)	(ft)		(ft)
504+52.50	45	1000.14	996.87	978.89	W12x65	999.82
504+60.50	46	1000.53	997.32	979.28	W12x65	1000.09
504+68.50	47	1001.01	997.59	979.76	W12x65	1001.09
504+76.50	48	1001.48	998.59	980.23	W12x65	1001.26
504+84.50	49	1001.98	998.76	980.73	W12x65	1001.53
504+92.50	50	1002.50	999.03	981.25	W12x65	1001.79
505+00.50	51	1003.02	999.29	981.77	W12x65	1002.09
505+08.50	52	1003.49	999.59	982.24	W12x65	1002.47
505+16.50	53	1003.96	999.97	982.71	W12x65	1002.75
505+24.50	54	1004.41	1000.25	983.16	W12x65	1003.03
505+32.50	55	1004.85	1000.53	983.60	W12x65	1003.19
505+40.50	56	1005.30	1000.69	984.05	W12x65	1004.27
505+48.50	57	1005.76	1001.77	984.51	W12x65	1005.89
505+56.50	58	1006.22	1003.14	984.97	W12x65	1006.90
505+64.50	59	1006.69	1002.77	985.44	W12x65	1005.64
505+72.50	60	1007.18	1002.68	985.93	W12x65	1005.27
505+80.50	61	1007.66	1002.68	986.41	W12x65	1005.18
505+88.50	62	1008.18	1002.68	986.93	W12x65	1005.43
505+96.50	63	1008.69	1002.93	987.44	W12x65	1006.52
506+04.50	64	1009.15	1004.02	987.90	W12x65	1008.03
506+12.50	65	1009.57	1005.53	988.32	W12x65	1009.04
506+20.50	66	1009.96	1006.54	988.71	W12x65	1009.87

Note:
The Contractor shall verify all controlling field dimensions before ordering or fabricating any material.

GEOTECHNICAL PROFESSIONAL APPROVAL DATE

DESIGN OVERSIGHT Wei An
SIGN OFF DATE

SCALE: As Shown | VERT.DATUM NAVD 1988 | HORZ.DATUM NAD 1983
PHOTOGRAMMETRY AS OF: X | ALIGNMENT TIES Dist. Traverse Sheet
SURVEYED BY X | DRAFTED BY X
FIELD CHECKED BY X | CHECKED BY X

DESIGN BY T. Dudley CHECKED R. Price
DETAILS BY S. Desalegn CHECKED R. Price
QUANTITIES BY T. Dudley / M. Stiller CHECKED E. Navarez/S. Desalegn

PREPARED FOR THE STATE OF CALIFORNIA DEPARTMENT OF TRANSPORTATION

Stephen J. Mislinski
PROJECT ENGINEER

BRIDGE NO. 36E-0024
POST MILE 7.38

RETAINING WALLS
RW NO. 4 FOUNDATION PLAN

DESIGN DETAIL SHEET (ENGLISH) (REV. 2/25/05)

ORIGINAL SCALE IN INCHES FOR REDUCED PLANS 0 1 2 3

CU 05
EA 0L7014

DISREGARD PRINTS BEARING EARLIER REVISION DATES

REVISION DATES (PRELIMINARY STAGE ONLY) 9/30/08 12/01/08 02/04/09 03/10/09 03/16/09 04/23/09 05/25/11 08/04/11

SHEET 12 OF 64

FILE => TBDRW04-e-fdp101.dgn

USERNAME => s124496 DATE PLOTTED => 01-OCT-2012 TIME PLOTTED => 06:32

DIST	COUNTY	ROUTE	POST MILES TOTAL PROJECT	SHEET No	TOTAL SHEETS
05	SCr	17	6.0/12.6	210	284

REGISTERED CIVIL ENGINEER 8/4/11 DATE

9-24-12
PLANS APPROVAL DATE

REGISTERED PROFESSIONAL ENGINEER T. Dudley No. C039514 Exp. 12/31/11 CIVIL STATE OF CALIFORNIA

The State of California or its officers or agents shall not be responsible for the accuracy or completeness of electronic copies of this plan sheet.

AECOM TECHNICAL SERVICES, INC.
2020 L STREET, SUITE 300
SACRAMENTO, CALIFORNIA 95811

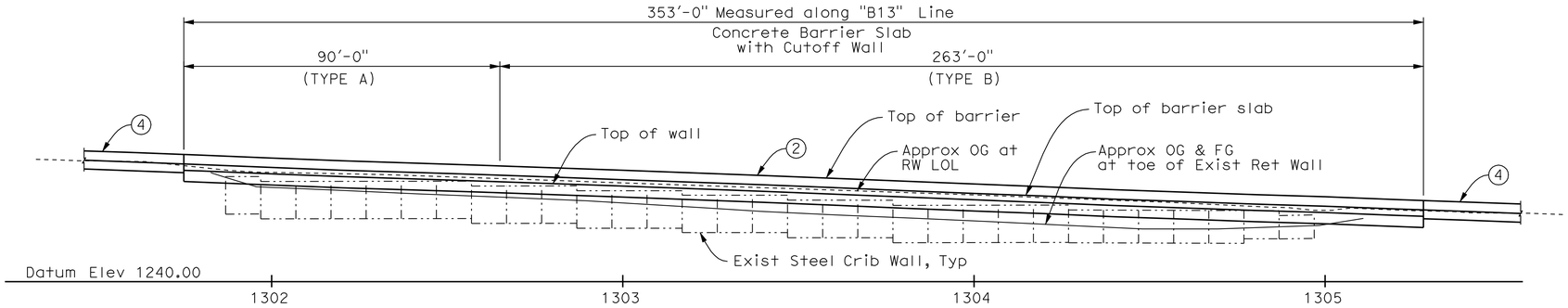

DEVELOPED ELEVATION

1" = 20'

QUANTITIES

STRUCTURE EXCAVATION (TYPE Z-2) (AERIALLY DEPOSITED LEAD)	84	CY
STRUCTURAL CONCRETE, BARRIER SLAB	192	CY
CONCRETE BARRIER (TYPE 732 MODIFIED)	353	LF

CURVE DATA TABLE

	R	Δ	T	L
(A)	300.00	5°42'38"	14.96	29.90

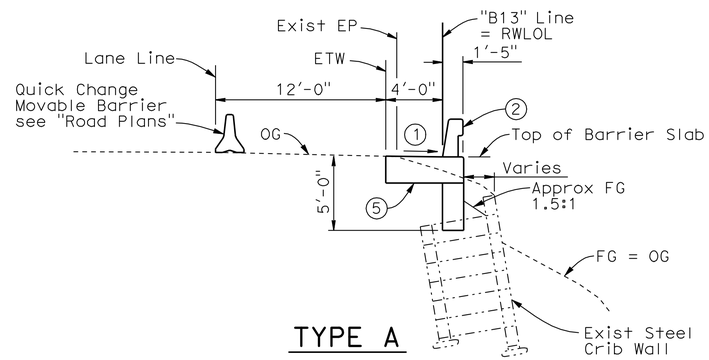

TYPE A

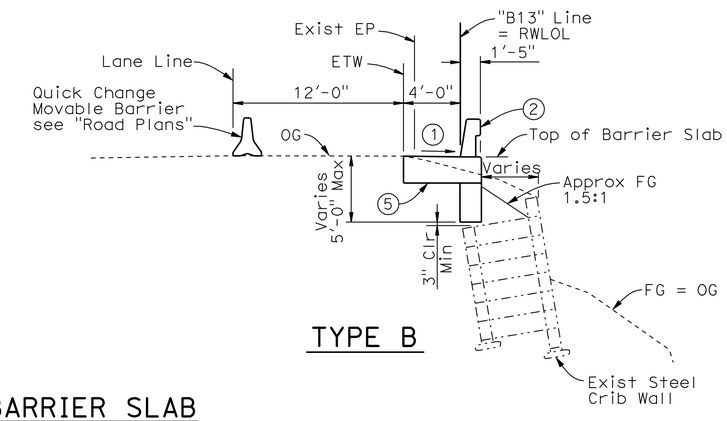

TYPE B

CONCRETE BARRIER SLAB WITH CUTOFF WALL (MOD) TYPICAL SECTIONS

3/16" = 1'-0"

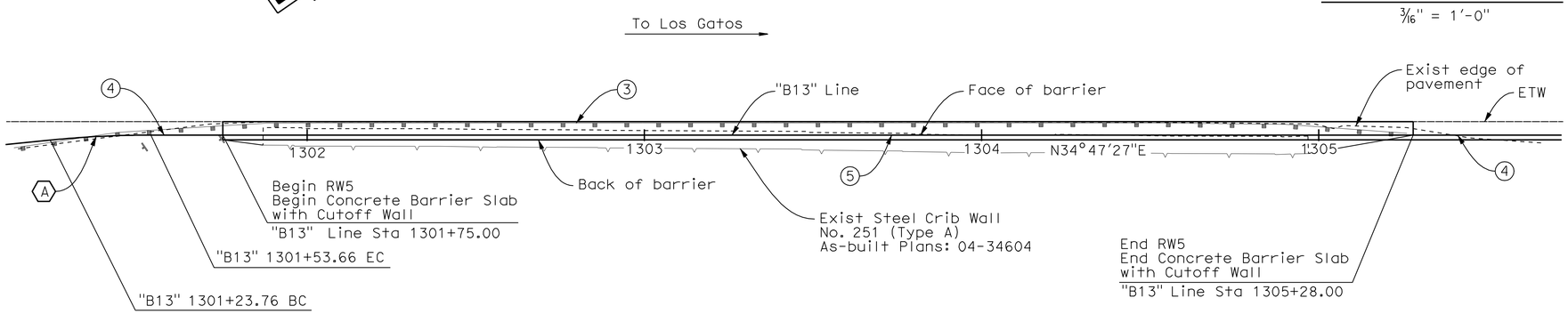

PLAN

1" = 20'

LEGEND:

1. Match existing cross slope
2. Concrete Barrier Type 732 (MOD)
3. Exist MBGR to be removed, see "Road Plans"
4. Concrete Barrier Type 732B, see "Road Plans"
5. Concrete Barrier Slab

Note:
The Contractor shall verify all controlling field dimensions before ordering or fabricating any material.

DESIGN OVERSIGHT Wei An	DESIGN	BY T. Dudley	CHECKED R. Price	LOAD & RESISTANCE FACTOR DESIGN	LIVE LOADING: HS20-44 AND ALTERNATIVE AND PERMIT DESIGN LOAD
8-10-11 SIGN OFF DATE	DETAILS	BY C. Lee	CHECKED T. Dudley	LAYOUT	BY C. Lee / CHECKED S. Mislinksi
	QUANTITIES	BY M. Stiller	CHECKED S. Desalegn	SPECIFICATIONS	BY T. Dudley / PLANS AND SPECS COMPARED

PREPARED FOR THE STATE OF CALIFORNIA DEPARTMENT OF TRANSPORTATION

Stephen Mislinski
PROJECT ENGINEER

BRIDGE NO. -
POST MILES 8.77

RETAINING WALLS
RW NO. 5 GENERAL PLAN

DESIGN GENERAL PLAN SHEET (ENGLISH) (REV.2/25/05)

ORIGINAL SCALE IN INCHES FOR REDUCED PLANS 0 1 2 3

CU 05
EA OL7014

DISREGARD PRINTS BEARING EARLIER REVISION DATES

REVISION DATES (PRELIMINARY STAGE ONLY): 12/04/08 02/04/09 03/26/09 03/16/09 04/23/09 03/25/11 05/25/11 08/04/11 8-9-11

SHEET 13 OF 64

FILE => TBDRW05-a-gp01.dgn

USERNAME => s124496 DATE PLOTTED => 01-OCT-2012 TIME PLOTTED => 06:33

DIST	COUNTY	ROUTE	POST MILES TOTAL PROJECT	SHEET No	TOTAL SHEETS
05	SCr	17	6.0/12.6	211	284

REGISTERED CIVIL ENGINEER — DATE 8/4/11

9-24-12
PLANS APPROVAL DATE

REGISTERED PROFESSIONAL ENGINEER — T. Dudley — No. C039514 — Exp. 12/31/11 — CIVIL — STATE OF CALIFORNIA

The State of California or its officers or agents shall not be responsible for the accuracy or completeness of electronic copies of this plan sheet.

AECOM TECHNICAL SERVICES, INC.
2020 L STREET, SUITE 300
SACRAMENTO, CALIFORNIA 95811

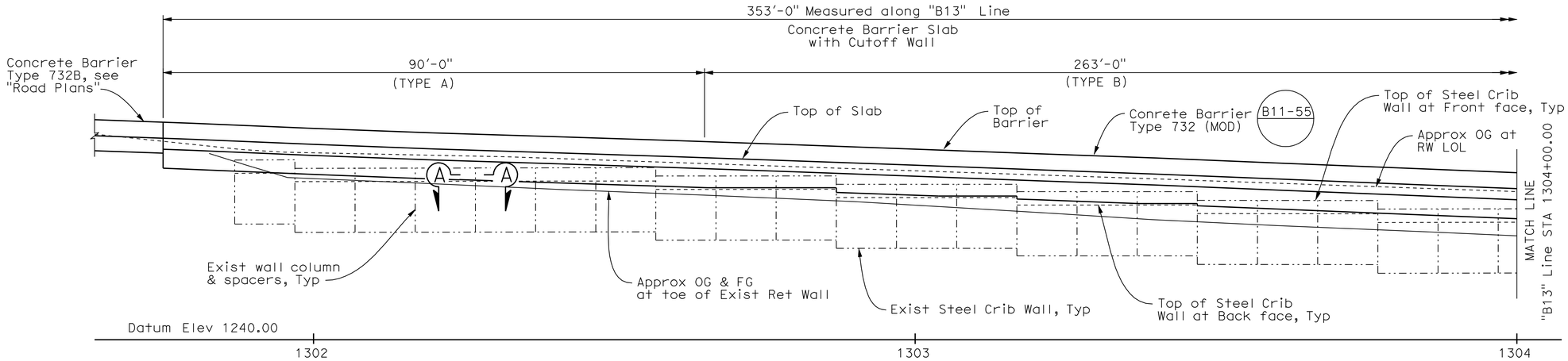

DEVELOPED ELEVATION
1" = 10'-0"

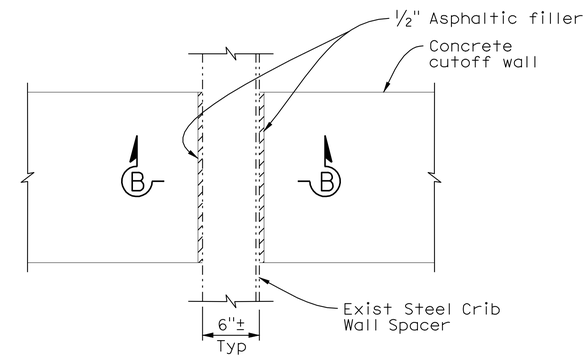

SECTION A-A
1½" = 1'-0"

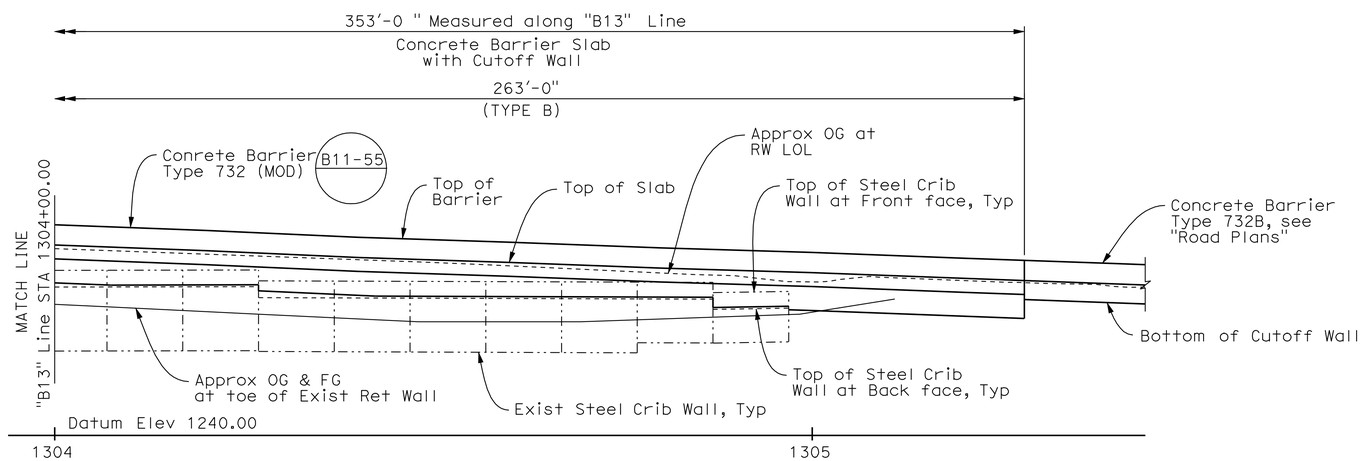

DEVELOPED ELEVATION
1" = 10'-0"

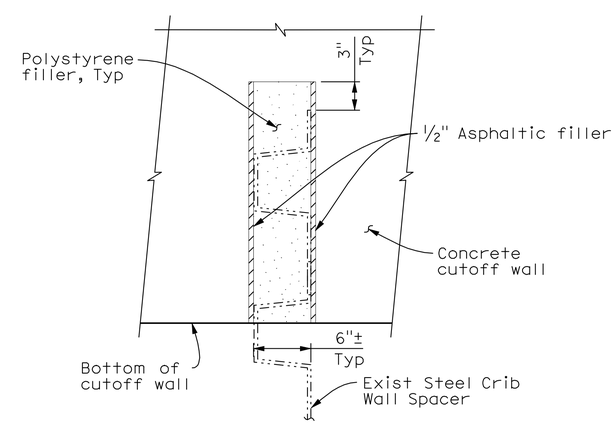

SECTION B-B
AT EXIST WALL SPACERS
1½" = 1'-0"

Note:
The Contractor shall verify all controlling field dimensions before ordering or fabricating any material.

DESIGN OVERSIGHT Wei An
SIGN OFF DATE

	BY	CHECKED
DESIGN	T. Dudley	R. Price
DETAILS	F. DeMarco	T. Dudley
QUANTITIES	M. Stiller	S. Desalegn

PREPARED FOR THE STATE OF CALIFORNIA DEPARTMENT OF TRANSPORTATION

Stephen J. Mislinski
PROJECT ENGINEER

BRIDGE NO.
POST MILE 8.77

RETAINING WALLS
RW NO. 5 STRUCTURE PLAN

DESIGN DETAIL SHEET (ENGLISH) (REV. 2/25/05)

ORIGINAL SCALE IN INCHES FOR REDUCED PLANS 0 1 2 3

CU 05
EA 0L7014

DISREGARD PRINTS BEARING EARLIER REVISION DATES

REVISION DATES (PRELIMINARY STAGE ONLY): 12/07/08 02/04/09 03/16/09 03/16/09 04/23/09 03/25/11 05/25/11 08/04/11

SHEET 14 OF 64

FILE => TBDRW05-c-sp01.dgn

USERNAME => s124496 DATE PLOTTED => 01-OCT-2012 TIME PLOTTED => 06:33

DIST	COUNTY	ROUTE	POST MILES TOTAL PROJECT	SHEET No	TOTAL SHEETS
05	SCr	17	6.0/12.6	212	284

REGISTERED CIVIL ENGINEER — DATE 8/4/11

9-24-12
PLANS APPROVAL DATE

REGISTERED PROFESSIONAL ENGINEER — T. Dudley — No. C039514 — Exp. 12/31/11 — CIVIL — STATE OF CALIFORNIA

The State of California or its officers or agents shall not be responsible for the accuracy or completeness of electronic copies of this plan sheet.

AECOM TECHNICAL SERVICES, INC.
2020 L STREET, SUITE 300
SACRAMENTO, CALIFORNIA 95811

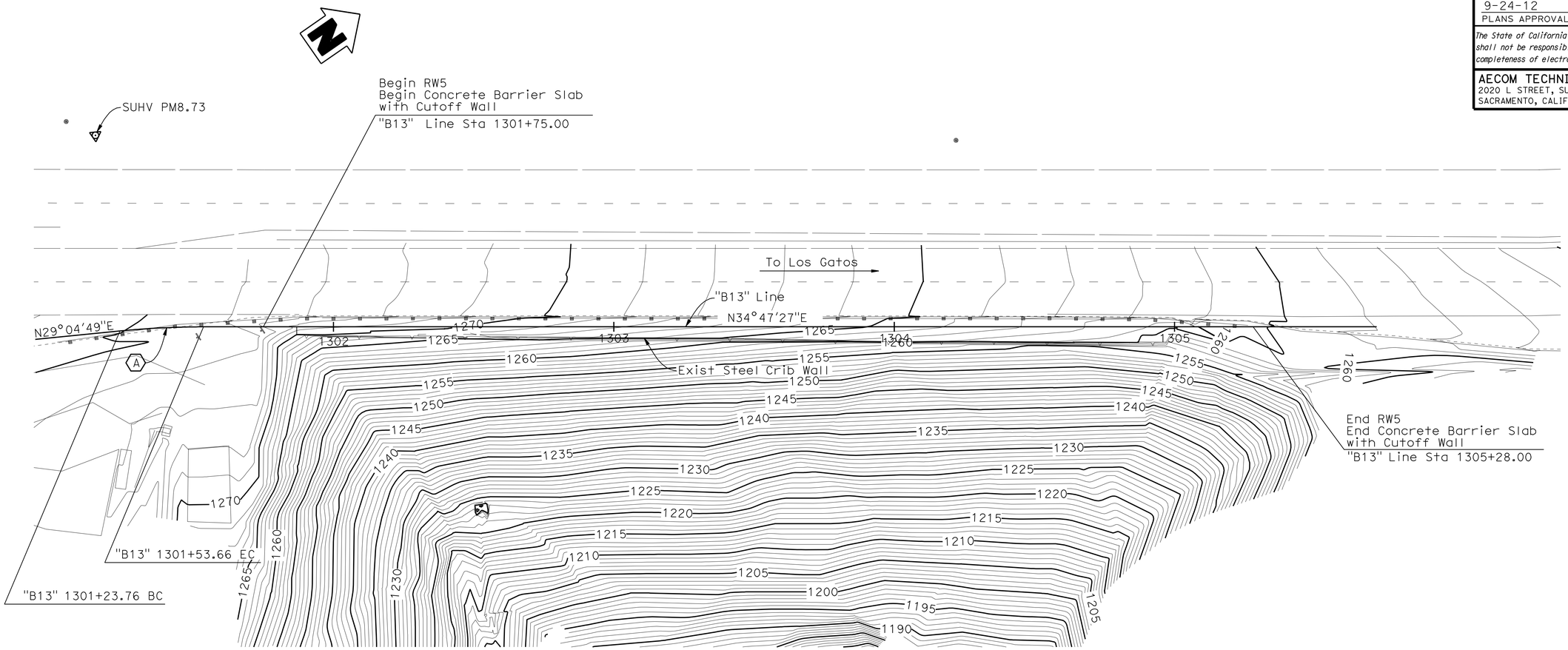

PLAN
1" = 20'

CURVE DATA TABLE

	R	Δ	T	L
A	300.00	5°42'38"	14.96	29.90

BENCH MARK

SUHV PM8.83 (Not Shown on Sheet)
N = 1861077.205,
E = 6131405.065,
Elev = 1255.88

SUHV PM8.73
70.32' Lt of "B13" Line
Sta 1301+22.03
N= 1860652.969,
E= 6131020.989,
ELEV= 1275.07

Note:
The Contractor shall verify all controlling field dimensions before ordering or fabricating any material.

GEOTECHNICAL PROFESSIONAL APPROVAL DATE

DESIGN OVERSIGHT Wei An	SCALE: As Shown	VERT.DATUM NAVD 1988	HORZ.DATUM NAD 1983	DESIGN	BY T. Dudley	CHECKED R. Price	PREPARED FOR THE STATE OF CALIFORNIA DEPARTMENT OF TRANSPORTATION
	PHOTOGRAMMETRY AS OF: X		ALIGNMENT TIES Dist. Traverse Sheet	DETAILS	BY C. Lee	CHECKED T. Dudley	
	SURVEYED	BY X	DRAFTED	BY X	QUANTITIES	BY M. Stiller	CHECKED S. Desalegn
SIGN OFF DATE	FIELD CHECKED	BY X	CHECKED	BY X			

Stephen J. Mislinski
PROJECT ENGINEER

BRIDGE NO. -
POST MILE 8.77

RETAINING WALLS
RW NO. 5 FOUNDATION PLAN

DESIGN DETAIL SHEET (ENGLISH) (REV. 2/25/05)

ORIGINAL SCALE IN INCHES FOR REDUCED PLANS 0 1 2 3

CU 05
EA 0L7014

DISREGARD PRINTS BEARING EARLIER REVISION DATES

REVISION DATES (PRELIMINARY STAGE ONLY): 12/01/08 02/04/09 03/16/09 03/16/09 04/23/09 03/25/11 05/25/11 08/04/11

SHEET 15 OF 64

FILE => TBDRW05-e-fdp101.dgn

USERNAME => s124496 DATE PLOTTED => 01-OCT-2012 TIME PLOTTED => 06:33

DIST	COUNTY	ROUTE	POST MILES TOTAL PROJECT	SHEET No	TOTAL SHEETS
05	SCr	17	6.0/12.6	213	284

REGISTERED CIVIL ENGINEER 8/4/11 DATE

9-24-12
PLANS APPROVAL DATE

REGISTERED PROFESSIONAL ENGINEER STEPHEN J. MISLINSKI No. C61834 Exp. 6/30/13 CIVIL STATE OF CALIFORNIA

The State of California or its officers or agents shall not be responsible for the accuracy or completeness of electronic copies of this plan sheet.

AECOM TECHNICAL SERVICES, INC.
2020 L STREET, SUITE 300
SACRAMENTO, CALIFORNIA 95811

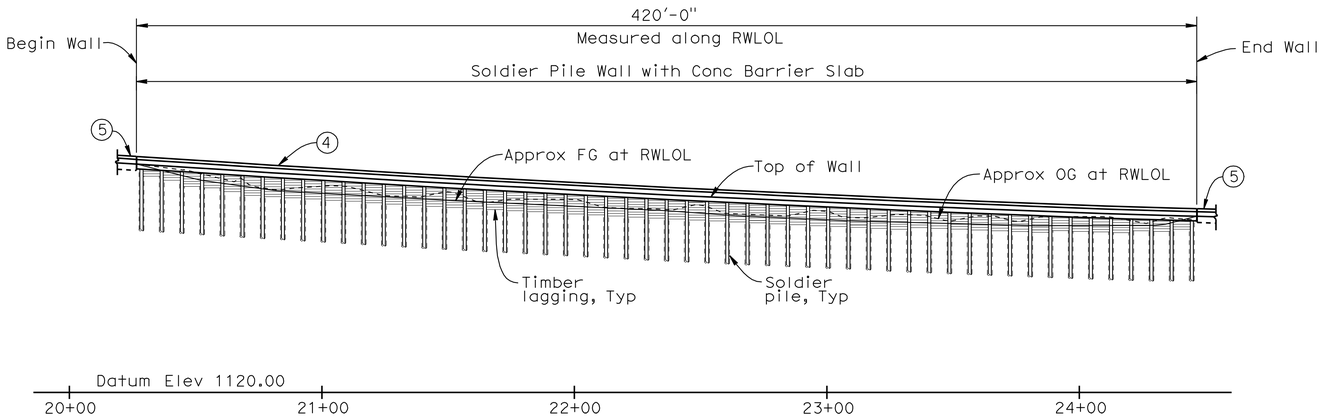

DEVELOPED ELEVATION
1" = 30'

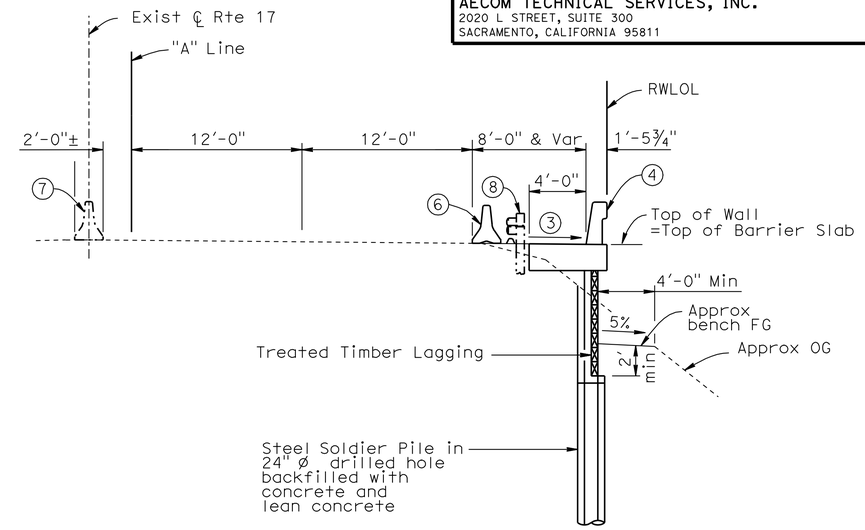

TYPICAL SECTION
3/16" = 1'-0"

QUANTITIES

24" DRILLED HOLE	1,418	LF
STRUCTURE EXCAVATION (SOLDIER PILE WALL)	168	CY
STRUCTURE EXCAVATION (TYPE Z-2) (AERIALLY DEPOSITED LEAD)	246	CY
STRUCTURE BACKFILL (SOLDIER PILE WALL)	58	CY
CONCRETE BACKFILL	115	CY
LEAN CONCRETE BACKFILL	41	CY
INSTALL STEEL SOLDIER PILING	53	EA
STRUCTURAL CONCRETE, BARRIER SLAB	156	CY
INSTALL TIMBER LAGGING	LUMP	SUM
CLEAN AND PAINT STEEL SOLDIER PILING	LUMP	SUM
CONCRETE BARRIER (TYPE 736 MODIFIED)	420	LF

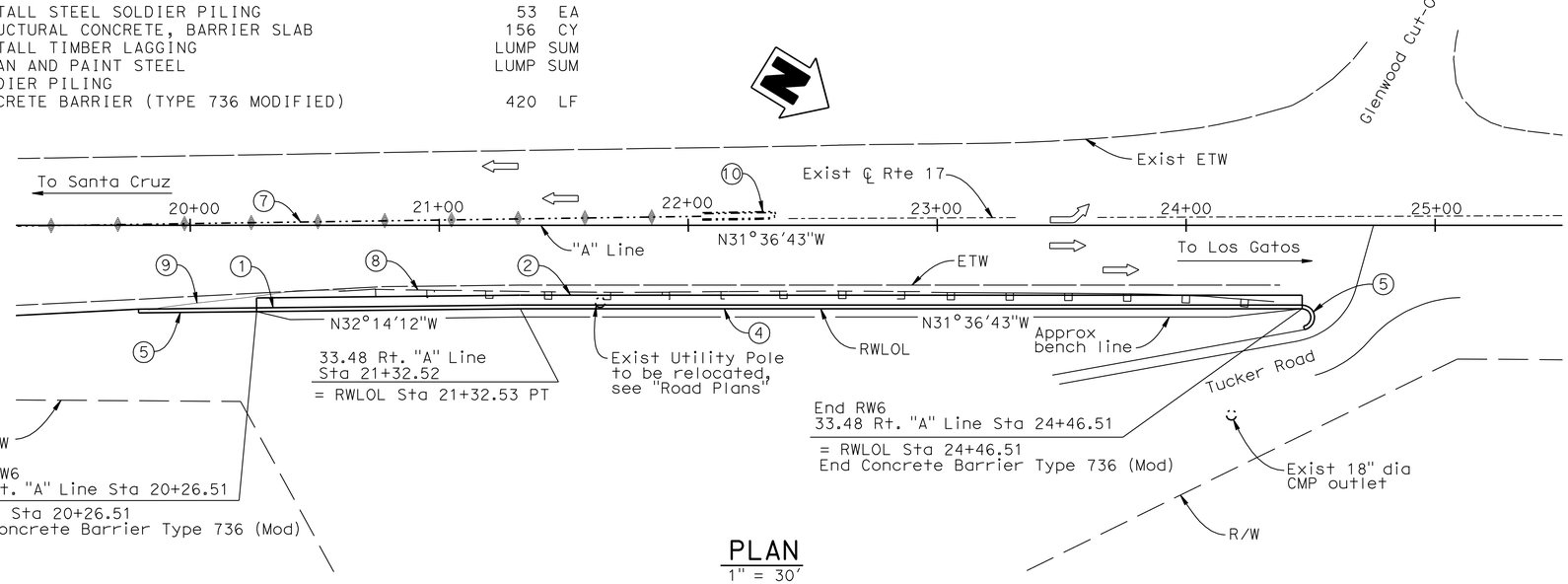

PLAN
1" = 30'

LEGEND:

1. Paint "Br No. 36E-0025"
2. Concrete Barrier Slab on Soldier Pile Wall
3. 5% cross slope
4. Concrete Barrier Type 736 (MOD)
5. Concrete Barrier Type 736B, see "Road Plans"
6. QCMB (Quickchange Movable Barrier), see "Road Plans"
7. Exist Concrete Barrier Type 50
8. Exist MBGR & Dike to be removed, see "Road Plans"
9. Exist Concrete Barrier to be removed, see "Road Plans"
10. Exist Crash Cushion

Note:
The Contractor shall verify all controlling field dimensions before ordering or fabricating any material.

DESIGN OVERSIGHT Wei An
8-10-11
SIGN OFF DATE

	BY	CHECKED			
DESIGN	S. Mislinski	B. Fish	LOAD & RESISTANCE FACTOR DESIGN	LIVE LOADING: HS20-44 AND ALTERNATIVE AND PERMIT DESIGN LOAD	
DETAILS	S. Desalegn	B. Fish	LAYOUT	S. Desalegn	S. MISLINSKI
QUANTITIES	M. Stiller	S. Desalegn	SPECIFICATIONS	T. Dudley	PLANS AND SPECS COMPARED

PREPARED FOR THE STATE OF CALIFORNIA DEPARTMENT OF TRANSPORTATION

Stephen Mislinski
PROJECT ENGINEER

BRIDGE NO. 36E-0025
POST MILES 8.9

RETAINING WALLS
RW NO. 6 GENERAL PLAN

DESIGN GENERAL PLAN SHEET (ENGLISH) (REV.2/25/05)

ORIGINAL SCALE IN INCHES FOR REDUCED PLANS 0 1 2 3

CU 05
EA 0L7014

DISREGARD PRINTS BEARING EARLIER REVISION DATES

REVISION DATES (PRELIMINARY STAGE ONLY): 10/6/08 12/01/08 02/04/09 03/10/09 03/16/09 04/23/09 03/25/11 05/25/11 08/04/11 8-9-11

SHEET 16 OF 64

FILE => TBDRW06-a-gp01.dgn

USERNAME => s124196 DATE PLOTTED => 01-OCT-2012 TIME PLOTTED => 06:33

DIST	COUNTY	ROUTE	POST MILES TOTAL PROJECT	SHEET No	TOTAL SHEETS
05	SCr	17	6.0/12.6	214	284

REGISTERED CIVIL ENGINEER 8/4/11 DATE

9-24-12
PLANS APPROVAL DATE

REGISTERED PROFESSIONAL ENGINEER STEPHEN J. MISLINSKI No. C61834 Exp. 6/30/13 CIVIL STATE OF CALIFORNIA

The State of California or its officers or agents shall not be responsible for the accuracy or completeness of electronic copies of this plan sheet.

AECOM TECHNICAL SERVICES, INC.
2020 L STREET, SUITE 300
SACRAMENTO, CALIFORNIA 95811

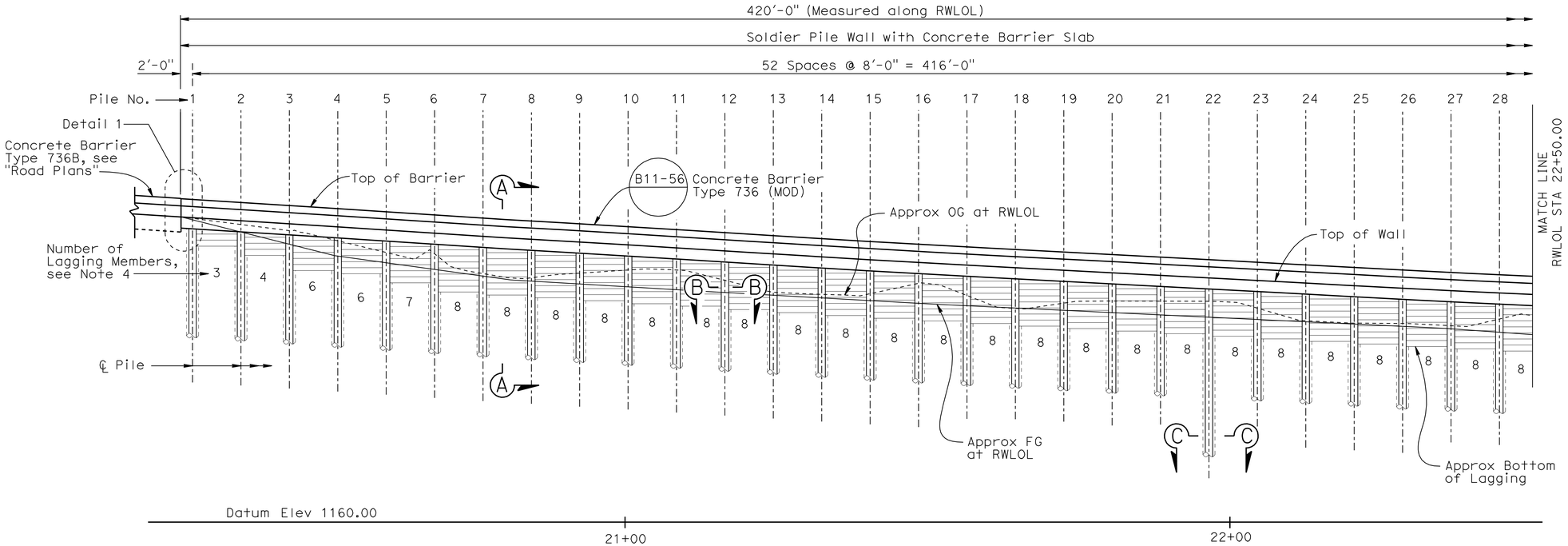

DEVELOPED ELEVATION
1" = 10'

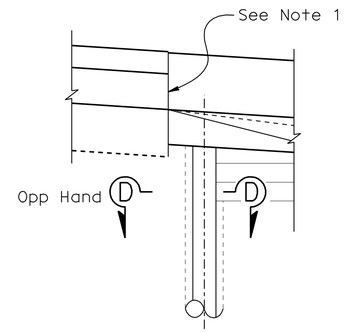

DETAIL 1
1/4" = 1'-0"

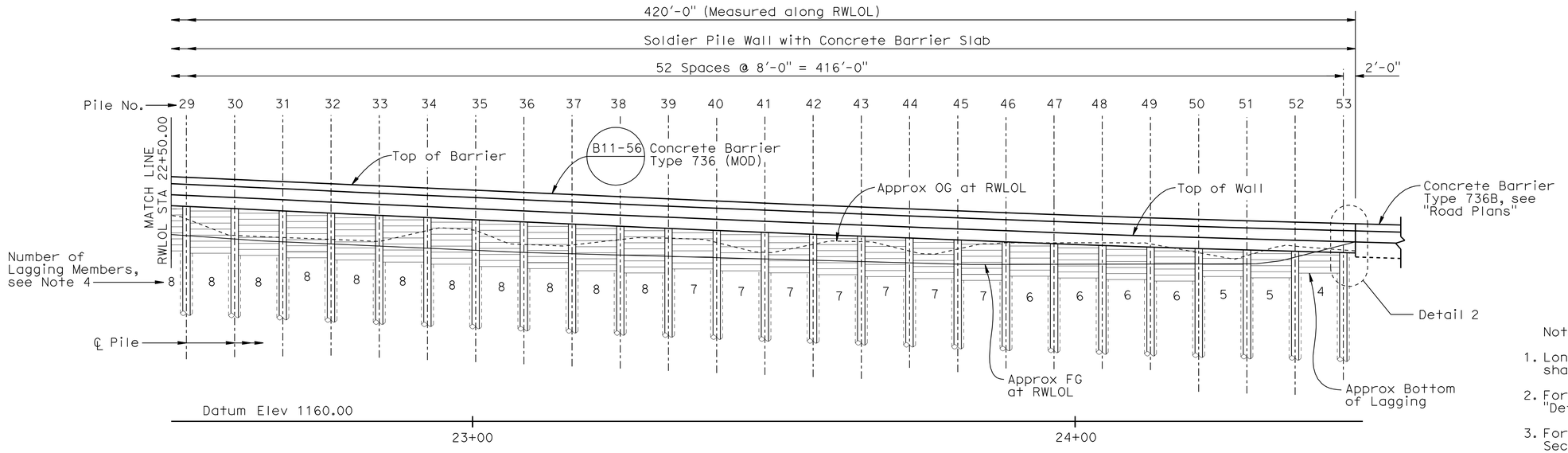

DEVELOPED ELEVATION
1" = 10'

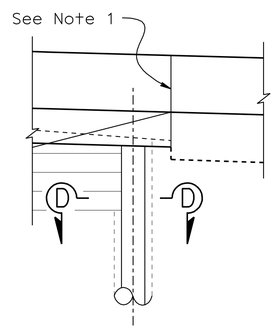

DETAIL 2
1/4" = 1'-0"

Notes:

1. Longitudinal reinforcement for barrier shall be continuous across joints.
2. For Section A-A, see "Details No. 1" sheet.
3. For Section B-B, Section C-C and Section D-D, see "Details No. 2" sheet.
4. Number of lagging members shown are approximate only. Contractor shall install lagging to a depth of 2 feet below the finished grade at the face of the soldier pile wall.

Note:
The Contractor shall verify all controlling field dimensions before ordering or fabricating any material.

DESIGN OVERSIGHT Wei An
SIGN OFF DATE

	BY	CHECKED
DESIGN	S. Mislinski	B. Fish
DETAILS	S. Desalegn	B. Fish
QUANTITIES	M. Stiller	S. Desalegn

PREPARED FOR THE STATE OF CALIFORNIA DEPARTMENT OF TRANSPORTATION

Stephen J. Mislinski
PROJECT ENGINEER

BRIDGE NO. 36E-0025
POST MILE 8.9

RETAINING WALLS
RW NO. 6 STRUCTURE PLAN

DESIGN DETAIL SHEET (ENGLISH) (REV. 2/25/05)

ORIGINAL SCALE IN INCHES FOR REDUCED PLANS 0 1 2 3

CU 05
EA 0L7014

DISREGARD PRINTS BEARING EARLIER REVISION DATES

REVISION DATES (PRELIMINARY STAGE ONLY) 10/6/08 12/01/08 02/04/09 03/10/09 03/16/09 04/23/09 03/28/11 05/28/11 08/04/11

SHEET 17 OF 64

FILE => TBDRW06-c-sp01.dgn

USERNAME => s124496 DATE PLOTTED => 01-OCT-2012 TIME PLOTTED => 06:34

DIST	COUNTY	ROUTE	POST MILES TOTAL PROJECT	SHEET No	TOTAL SHEETS
05	SCr	17	6.0/12.6	215	284

REGISTERED CIVIL ENGINEER 8/4/11 DATE

9-24-12
PLANS APPROVAL DATE

REGISTERED PROFESSIONAL ENGINEER STEPHEN J. MISLINSKI No. C61834 Exp. 6/30/13 CIVIL STATE OF CALIFORNIA

The State of California or its officers or agents shall not be responsible for the accuracy or completeness of electronic copies of this plan sheet.

AECOM TECHNICAL SERVICES, INC.
2020 L STREET, SUITE 300
SACRAMENTO, CALIFORNIA 95811

BENCH MARKS

PM871 (Not shown on Plan)
N = 1860610,
E = 6131133
Elev = 1272.638

PM9541 (Not shown on Plan)
N = 1864291,
E = 6131687
Elev = 1218.925

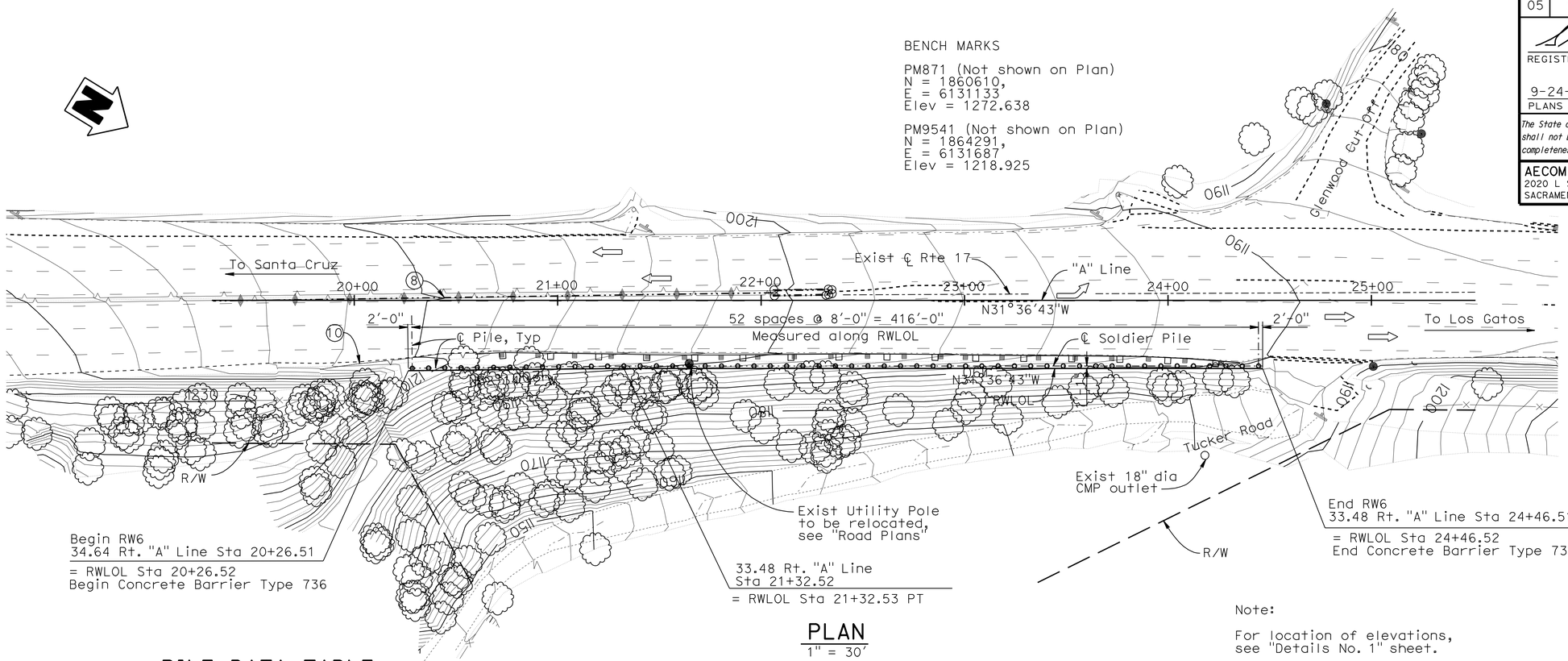

PLAN
1" = 30'

Note:

For location of elevations, see "Details No. 1" sheet.

PILE DATA TABLE

Station along RWLOL	Pile No.	Top of Pile Elev	Concrete Cut-off Elev	Bottom of Drilled Hole Elev	Pile Section	FG at RWLOL Elev
(ft)		(ft)	(ft)	(ft)		(ft)
20+28.51	1	1208.60	1204.93	1181.85	W12x96	1209.99
20+36.51	2	1208.14	1203.46	1181.39	W12x96	1207.97
20+44.51	3	1207.65	1201.50	1180.90	W12x96	1205.96
20+52.51	4	1207.13	1200.40	1180.38	W12x96	1204.00
20+60.51	5	1206.61	1199.30	1179.86	W12x96	1202.90
20+68.51	6	1206.08	1198.20	1179.33	W12x96	1201.80
20+76.51	7	1205.55	1197.37	1178.80	W12x96	1200.70
20+84.51	8	1205.02	1196.90	1178.27	W12x96	1199.87
20+92.51	9	1204.50	1196.43	1177.75	W12x96	1199.40
21+00.51	10	1203.97	1195.96	1177.22	W12x96	1198.93
21+08.51	11	1203.51	1195.49	1176.76	W12x96	1198.46
21+16.51	12	1203.05	1195.05	1176.30	W12x96	1197.99
21+24.51	13	1202.60	1194.60	1175.85	W12x96	1197.55
21+32.51	14	1202.15	1194.15	1175.40	W12x96	1197.10
21+40.51	15	1201.70	1193.71	1174.95	W12x96	1196.65
21+48.51	16	1201.27	1193.31	1174.52	W12x96	1196.21
21+56.51	17	1200.83	1192.93	1174.08	W12x96	1195.81
21+64.51	18	1200.41	1192.55	1173.66	W12x96	1195.43

Station along RWLOL	Pile No.	Top of Pile Elev	Concrete Cut-off Elev	Bottom of Drilled Hole Elev	Pile Section	FG at RWLOL Elev
(ft)		(ft)	(ft)	(ft)		(ft)
21+72.51	19	1200.00	1192.17	1173.25	W12x96	1195.05
21+80.51	20	1199.59	1191.79	1172.84	W12x96	1194.67
21+88.51	21	1199.17	1191.42	1172.42	W12x96	1194.29
21+96.51	22	1198.75	1191.04	1172.00	W12x96	1193.92
22+04.51	23	1198.34	1190.66	1171.59	W12x96	1193.54
22+12.51	24	1197.92	1190.28	1171.17	W12x96	1193.16
22+20.51	25	1197.51	1189.90	1170.76	W12x96	1192.78
22+28.51	26	1197.10	1189.50	1170.35	W12x96	1192.40
22+36.51	27	1196.69	1188.93	1169.94	W12x96	1192.00
22+44.51	28	1196.25	1188.37	1169.50	W12x96	1191.43
22+52.51	29	1195.79	1187.80	1169.04	W12x96	1190.87
22+60.51	30	1195.35	1187.36	1168.60	W12x96	1190.30
22+68.51	31	1194.99	1187.00	1168.24	W12x96	1189.86
22+76.51	32	1194.63	1186.64	1167.88	W12x96	1189.50
22+84.51	33	1194.30	1186.28	1167.55	W12x96	1189.14
22+92.51	34	1193.98	1185.93	1167.23	W12x96	1188.78
23+00.51	35	1193.67	1185.57	1166.92	W12x96	1188.43
23+08.51	36	1193.35	1185.35	1166.60	W12x96	1188.07

Station along RWLOL	Pile No.	Top of Pile Elev	Concrete Cut-off Elev	Bottom of Drilled Hole Elev	Pile Section	FG at RWLOL Elev
(ft)		(ft)	(ft)	(ft)		(ft)
23+16.51	37	1193.04	1185.14	1166.29	W12x96	1187.85
23+24.51	38	1192.75	1184.92	1166.00	W12x96	1187.64
23+32.51	39	1192.48	1184.71	1165.73	W12x96	1187.42
23+40.51	40	1192.21	1184.49	1165.46	W12x96	1187.21
23+48.51	41	1191.91	1184.28	1165.16	W12x96	1186.99
23+56.51	42	1191.62	1184.06	1164.87	W12x96	1186.78
23+64.51	43	1191.32	1183.85	1164.57	W12x96	1186.56
23+72.51	44	1191.02	1183.63	1164.27	W12x96	1186.35
23+80.51	45	1190.72	1183.59	1163.97	W12x96	1186.13
23+88.51	46	1190.42	1183.59	1163.67	W12x96	1186.09
23+96.51	47	1190.11	1183.59	1163.36	W12x96	1186.11
24+04.51	48	1189.83	1183.61	1163.08	W12x96	1186.13
24+12.51	49	1189.56	1183.63	1162.81	W12x96	1186.16
24+20.51	50	1189.29	1183.66	1162.54	W12x96	1186.18
24+28.51	51	1189.04	1183.68	1162.29	W12x96	1186.21
24+36.51	52	1188.79	1183.71	1162.04	W12x96	1187.30
24+44.51	53	1188.54	1184.37	1161.79	W12x96	1189.32

Note:
The Contractor shall verify all controlling field dimensions before ordering or fabricating any material.

GEOTECHNICAL PROFESSIONAL APPROVAL DATE

DESIGN OVERSIGHT Wei An
SIGN OFF DATE

SCALE: As Shown | VERT.DATUM NAVD 1988 | HORZ.DATUM NAD 1983
PHOTOGRAMMETRY AS OF: X | ALIGNMENT TIES Dist. Traverse Sheet
SURVEYED BY X | DRAFTED BY X
FIELD CHECKED BY X | CHECKED BY X

DESIGN BY S. MISLINSKI CHECKED B. Fish
DETAILS BY M. STILLER CHECKED B. Fish
QUANTITIES BY M. Stiller CHECKED S. Desalegn

PREPARED FOR THE STATE OF CALIFORNIA DEPARTMENT OF TRANSPORTATION

Stephen J. Mislinski
PROJECT ENGINEER

BRIDGE NO. 36E-0025
POST MILE 8.9

RETAINING WALLS
RW NO. 6 FOUNDATION PLAN

DESIGN DETAIL SHEET (ENGLISH) (REV. 2/25/05)

ORIGINAL SCALE IN INCHES FOR REDUCED PLANS 0 1 2 3

CU 05
EA 0L7014

DISREGARD PRINTS BEARING EARLIER REVISION DATES
REVISION DATES (PRELIMINARY STAGE ONLY) 10/08/08 12/09/08 02/04/09 03/10/09 03/16/09 04/23/09 03/28/11 05/28/11 08/04/11

SHEET 18 OF 64

FILE => TBDRW06-e-fdp101.dgn

USERNAME => s124496 DATE PLOTTED => 01-OCT-2012 TIME PLOTTED => 06:34

DIST	COUNTY	ROUTE	POST MILES TOTAL PROJECT	SHEET No	TOTAL SHEETS
05	SCr	17	6.0/12.6	216	284

REGISTERED CIVIL ENGINEER 8/4/11 DATE

9-24-12
PLANS APPROVAL DATE

REGISTERED PROFESSIONAL ENGINEER T. Dudley No. C039514 Exp. 12/31/11 CIVIL STATE OF CALIFORNIA

The State of California or its officers or agents shall not be responsible for the accuracy or completeness of electronic copies of this plan sheet.

AECOM TECHNICAL SERVICES, INC.
2020 L STREET, SUITE 300
SACRAMENTO, CALIFORNIA 95811

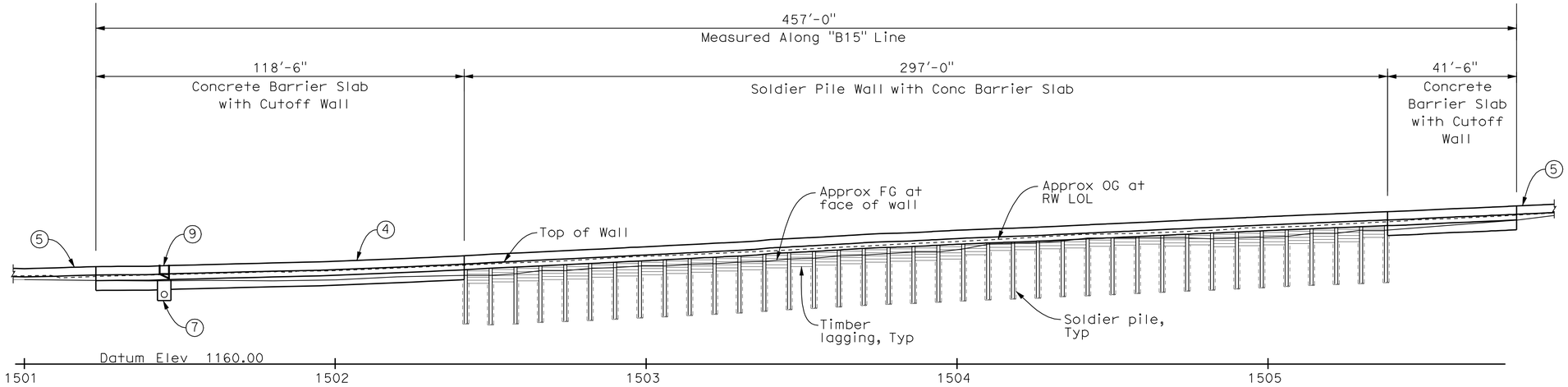

DEVELOPED ELEVATION

1" = 20'

QUANTITIES

24" DRILLED HOLE	814	LF
STRUCTURE EXCAVATION (SOLDIER PILE WALL)	101	CY
STRUCTURE EXCAVATION (TYPE Z-2) (AERIALLY DEPOSITED LEAD)	132	CY
STRUCTURE BACKFILL (SOLDIER PILE WALL)	29	CY
CONCRETE BACKFILL	64	CY
LEAN CONCRETE BACKFILL	19	CY
INSTALL STEEL SOLDIER PILING	38	EA
STRUCTURAL CONCRETE, BARRIER SLAB	196	CY
MINOR CONCRETE (DRAINAGE INLET)	2	CY
INSTALL TIMBER LAGGING	LUMP SUM	
CLEAN AND PAINT STEEL SOLDIER PILING	LUMP SUM	
MISCELLANEOUS IRON AND STEEL	239	LB
MISCELLANEOUS METAL (MAINTENANCE PLATFORM)	292	LB
CONCRETE BARRIER (TYPE 732 MODIFIED)	457	LF

CURVE DATA TABLE

	R	Δ	T	L
A	784.00	38°37'47"	274.78	528.58

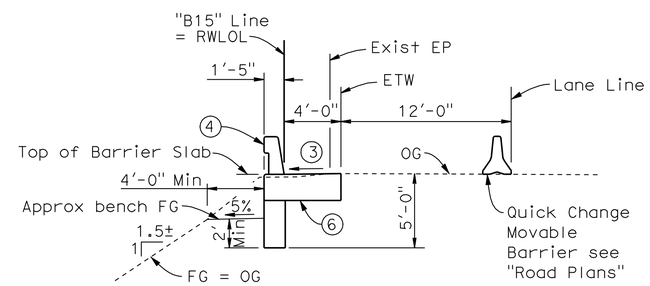

CONCRETE BARRIER SLAB WITH CUTOFF WALL

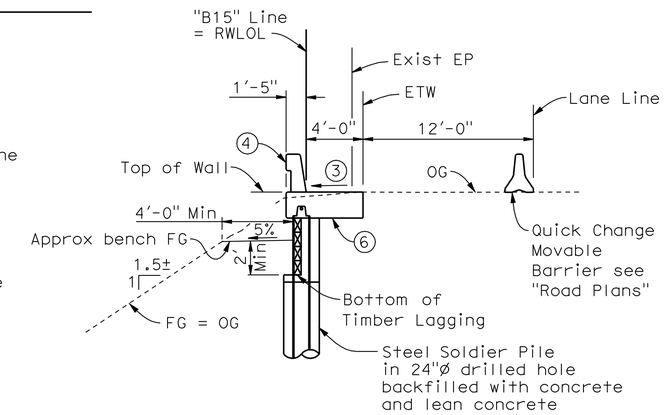

CONCRETE BARRIER SLAB ON SOLDIER PILE WALL

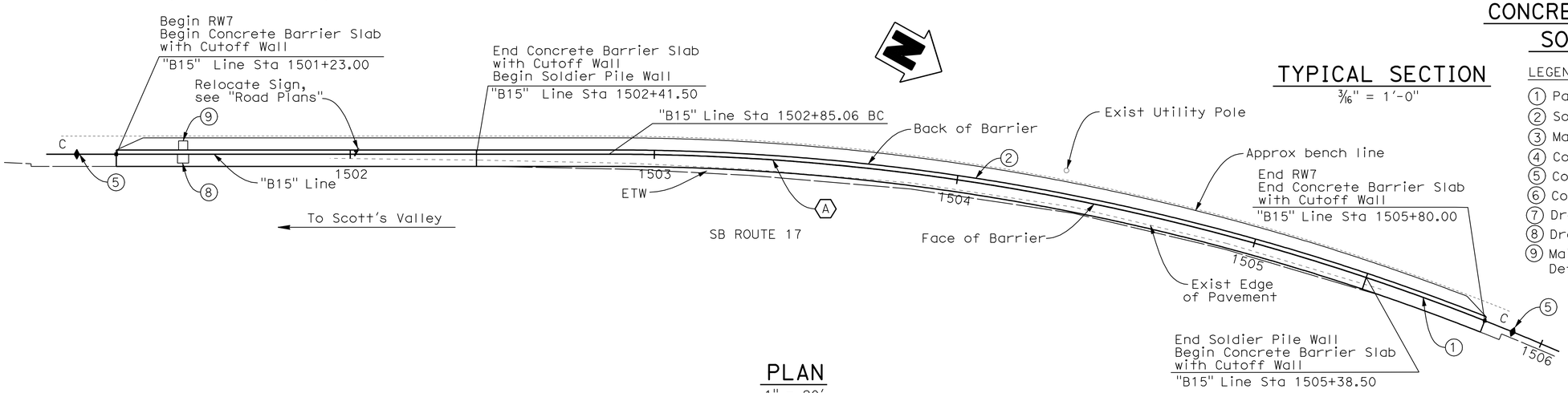

PLAN

1" = 20'

TYPICAL SECTION

3/16" = 1'-0"

LEGEND:

1. Paint "Br No. 36E-0026"
2. Soldier Pile Wall with Concrete Barrier Slab
3. Match existing cross slope
4. Concrete Barrier Type 732 (MOD)
5. Concrete Barrier Type 732B, see "Road Plans"
6. Concrete Barrier Slab
7. Drainage outlet, see "Road Plans"
8. Drainage inlet, see "Drainage Inlet Details" sheet
9. Maintenance Platform, see "Maintenance Platform Details No. 1" sheet

Note:
The Contractor shall verify all controlling field dimensions before ordering or fabricating any material.

DESIGN OVERSIGHT Wei An 8-10-11 SIGN OFF DATE	DESIGN	BY T. Dudley	CHECKED R. Price	LOAD & RESISTANCE FACTOR DESIGN	LIVE LOADING: HS20-44 AND ALTERNATIVE AND PERMIT DESIGN LOAD
	DETAILS	BY S. Desalegn	CHECKED R. Price	LAYOUT BY A. Wang	CHECKED T. Dudley
	QUANTITIES	BY T. Dudley	CHECKED E. Nevarez	SPECIFICATIONS BY T. Dudley	PLANS AND SPECS COMPARED

PREPARED FOR THE STATE OF CALIFORNIA DEPARTMENT OF TRANSPORTATION

Stephen Mislinski
PROJECT ENGINEER

BRIDGE NO. 36E-0026
POST MILES 9.11

RETAINING WALLS
RW NO. 7 GENERAL PLAN

DESIGN GENERAL PLAN SHEET (ENGLISH) (REV.2/25/05)

ORIGINAL SCALE IN INCHES FOR REDUCED PLANS 0 1 2 3

CU 05
EA OL7014

DISREGARD PRINTS BEARING EARLIER REVISION DATES

REVISION DATES (PRELIMINARY STAGE ONLY) 9/30/08 12/01/08 02/04/09 03/10/09 03/16/09 04/23/09 03/28/11 05/25/11 08/04/11 8-9-11

SHEET 19 OF 64

FILE => TBDRW07-a-gp01.dgn

USERNAME => s124496 DATE PLOTTED => 01-OCT-2012 TIME PLOTTED => 06:34

DIST	COUNTY	ROUTE	POST MILES TOTAL PROJECT	SHEET No	TOTAL SHEETS
05	SCr	17	6.0/12.6	217	284

REGISTERED CIVIL ENGINEER — DATE 8/4/11

9-24-12
PLANS APPROVAL DATE

The State of California or its officers or agents shall not be responsible for the accuracy or completeness of electronic copies of this plan sheet.

REGISTERED PROFESSIONAL ENGINEER — T. Dudley — No. C039514 — Exp. 12/31/11 — CIVIL — STATE OF CALIFORNIA

AECOM TECHNICAL SERVICES, INC.
2020 L STREET, SUITE 300
SACRAMENTO, CALIFORNIA 95811

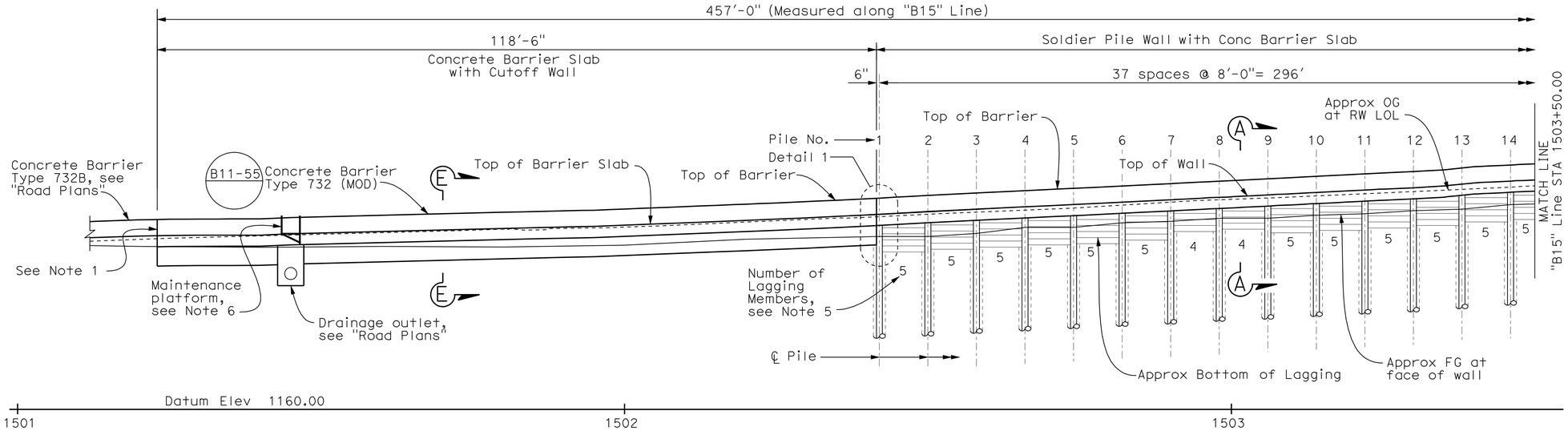

DEVELOPED ELEVATION

1" = 10'

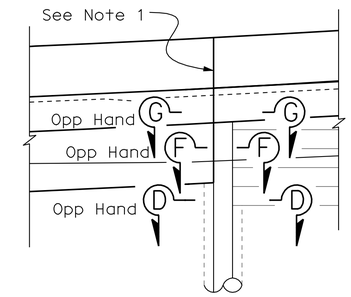

DETAIL 1

1/4" = 1'-0"

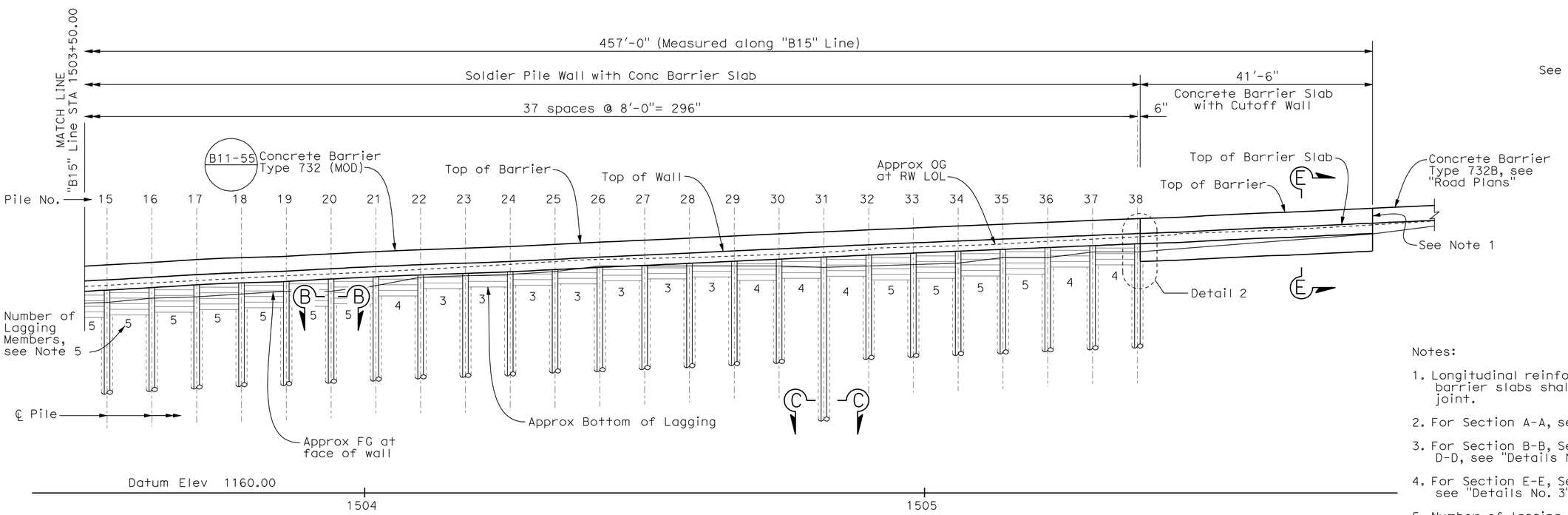

DEVELOPED ELEVATION

1" = 10'

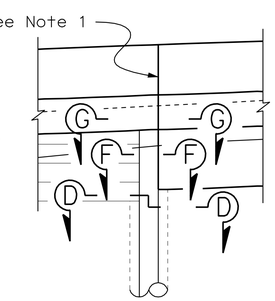

DETAIL 2

1/4" = 1'-0"

Notes:

1. Longitudinal reinforcement for barrier and barrier slabs shall be continuous through joint.
2. For Section A-A, see "Details No. 1" sheet.
3. For Section B-B, Section C-C and Section D-D, see "Details No. 2" sheet.
4. For Section E-E, Section F-F and Section G-G, see "Details No. 3" sheet.
5. Number of lagging members shown are approximate only. Contractor shall install lagging to a depth of 2 feet below the finished grade at the face of the Soldier Pile Wall.
6. For maintenance platform details, see "Maintenance Platform Details No. 1" sheet.

Note:
The Contractor shall verify all controlling field dimensions before ordering or fabricating any material.

DESIGN OVERSIGHT — Wei An	DESIGN	BY T. Dudley	CHECKED R. Price
SIGN OFF DATE	DETAILS	BY S. Desalegn	CHECKED R. Price
	QUANTITIES	BY T. Dudley	CHECKED E. Nevarez

PREPARED FOR THE STATE OF CALIFORNIA DEPARTMENT OF TRANSPORTATION

Stephen J. Mislinski — PROJECT ENGINEER

BRIDGE NO. 36E-0026
POST MILE 9.11

RETAINING WALLS
RW NO. 7 STRUCTURE PLAN

DESIGN DETAIL SHEET (ENGLISH) (REV. 2/25/05)

ORIGINAL SCALE IN INCHES FOR REDUCED PLANS 0 1 2 3

CU 05
EA 0L7014

DISREGARD PRINTS BEARING EARLIER REVISION DATES — REVISION DATES (PRELIMINARY STAGE ONLY): 9/30/08 12/01/08 02/04/09 03/16/09 03/16/09 04/23/09 03/25/11 05/25/11 08/04/11

SHEET 20 OF 64

FILE => TBDRW07-c-sp01.dgn

USERNAME => s124496 DATE PLOTTED => 01-OCT-2012 TIME PLOTTED => 06:34

DIST	COUNTY	ROUTE	POST MILES TOTAL PROJECT	SHEET No	TOTAL SHEETS
05	SCr	17	6.0/12.6	218	284

REGISTERED CIVIL ENGINEER — DATE 8/4/11

9-24-12
PLANS APPROVAL DATE

REGISTERED PROFESSIONAL ENGINEER — T. Dudley — No. C039514 — Exp. 12/31/11 — CIVIL — STATE OF CALIFORNIA

The State of California or its officers or agents shall not be responsible for the accuracy or completeness of electronic copies of this plan sheet.

AECOM TECHNICAL SERVICES, INC.
2020 L STREET, SUITE 300
SACRAMENTO, CALIFORNIA 95811

BENCH MARK

SUHV PM 9.05 (Not Shown on Sheet)
N= 1862292.492,
E= 6130976.632,
ELEV= 1186.467

PRHV PM 9.15
2.47' Lt of "B15" Line
Sta 1505+04.40,
N= 1862750.897,
E= 6130756.311,
ELEV 1204.003

CURVE DATA TABLE

	R	Δ	T	L
A	784.00	38°37'47"	274.78	528.58
B	300.00	1°48'54"	4.75	9.50

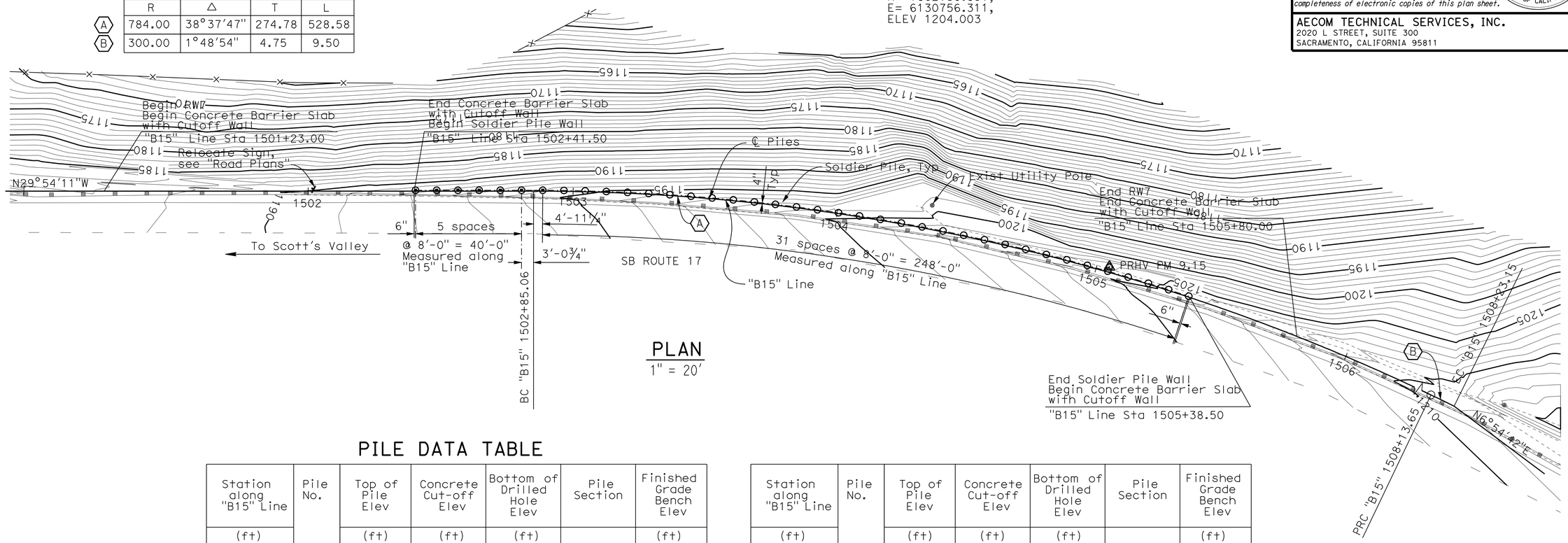

PLAN
1" = 20'

PILE DATA TABLE

Station along "B15" Line	Pile No.	Top of Pile Elev	Concrete Cut-off Elev	Bottom of Drilled Hole Elev	Pile Section	Finished Grade Bench Elev
(ft)		(ft)	(ft)	(ft)		(ft)
1502+42.00	1	1190.96	1185.87	1170.71	W12x65	1188.37
1502+50.00	2	1191.42	1185.87	1171.17	W12x65	1188.66
1502+58.00	3	1191.87	1186.16	1171.62	W12x65	1188.92
1502+66.00	4	1192.26	1186.42	1172.01	W12x65	1189.70
1502+74.00	5	1192.63	1187.20	1172.38	W12x65	1190.17
1502+82.00	6	1193.01	1187.67	1172.76	W12x65	1190.63
1502+90.00	7	1193.39	1188.13	1173.14	W12x65	1191.08
1502+98.00	8	1193.77	1188.58	1173.52	W12x65	1191.44
1503+06.00	9	1194.18	1188.94	1173.93	W12x65	1191.62
1503+14.00	10	1194.59	1189.12	1174.34	W12x65	1191.86
1503+22.00	11	1195.01	1189.36	1174.76	W12x65	1192.16
1503+30.00	12	1195.43	1189.66	1175.18	W12x65	1192.50
1503+38.00	13	1195.85	1190.00	1175.60	W12x65	1192.90
1503+46.00	14	1196.27	1190.40	1176.02	W12x65	1193.38
1503+54.00	15	1196.69	1190.88	1176.44	W12x65	1193.90
1503+62.00	16	1197.11	1191.40	1176.86	W12x65	1194.27
1503+70.00	17	1197.53	1191.77	1177.28	W12x65	1194.69
1503+78.00	18	1197.95	1192.19	1177.70	W12x65	1195.16
1503+86.00	19	1198.33	1192.66	1178.08	W12x65	1195.64
1503+94.00	20	1198.71	1193.14	1178.46	W12x65	1195.91

Station along "B15" Line	Pile No.	Top of Pile Elev	Concrete Cut-off Elev	Bottom of Drilled Hole Elev	Pile Section	Finished Grade Bench Elev
(ft)		(ft)	(ft)	(ft)		(ft)
1504+02.00	21	1199.08	1193.41	1178.83	W12x65	1197.20
1504+10.00	22	1199.46	1194.70	1179.21	W12x65	1198.45
1504+18.00	23	1199.84	1195.95	1179.59	W12x65	1198.78
1504+26.00	24	1200.22	1196.28	1179.97	W12x65	1198.97
1504+34.00	25	1200.62	1196.47	1180.37	W12x65	1199.79
1504+42.00	26	1201.00	1197.29	1180.75	W12x65	1200.39
1504+50.00	27	1201.35	1197.89	1181.10	W12x65	1200.42
1504+58.00	28	1201.69	1197.92	1181.44	W12x65	1200.47
1504+66.00	29	1202.03	1197.97	1181.78	W12x65	1200.56
1504+74.00	30	1202.36	1197.94	1182.11	W12x65	1200.53
1504+82.00	31	1202.70	1197.85	1182.45	W12x65	1200.44
1504+90.00	32	1203.06	1197.85	1182.81	W12x65	1200.35
1504+98.00	33	1203.42	1197.85	1183.17	W12x65	1200.68
1505+06.00	34	1203.78	1198.18	1183.53	W12x65	1201.12
1505+14.00	35	1204.14	1198.62	1183.89	W12x65	1201.60
1505+22.00	36	1204.49	1199.10	1184.24	W12x65	1202.13
1505+30.00	37	1204.82	1199.63	1184.57	W12x65	1202.72
1505+38.00	38	1205.14	1200.22	1184.89	W12x65	1203.77

Note:
The Contractor shall verify all controlling field dimensions before ordering or fabricating any material.

GEOTECHNICAL PROFESSIONAL APPROVAL DATE

DESIGN OVERSIGHT Wei An
SIGN OFF DATE

SCALE: As Shown | VERT.DATUM NAVD 1988 | HORZ.DATUM NAD 1983
PHOTOGRAMMETRY AS OF: X | ALIGNMENT TIES Dist. Traverse Sheet
SURVEYED BY X | DRAFTED BY X
FIELD CHECKED BY X | CHECKED BY X

DESIGN BY T. Dudley CHECKED R. Price
DETAILS BY S. Desalegn CHECKED R. Price
QUANTITIES BY T. Dudley CHECKED E. Nevarez

PREPARED FOR THE STATE OF CALIFORNIA DEPARTMENT OF TRANSPORTATION

Stephen J. Mislinski
PROJECT ENGINEER

BRIDGE NO. 36E-0026
POST MILE 9.11

RETAINING WALLS
RW NO. 7 FOUNDATION PLAN

DESIGN DETAIL SHEET (ENGLISH) (REV. 2/25/05)

ORIGINAL SCALE IN INCHES FOR REDUCED PLANS 0 1 2 3

CU 05
EA 0L7014

DISREGARD PRINTS BEARING EARLIER REVISION DATES

REVISION DATES (PRELIMINARY STAGE ONLY) 9/30/08 12/01/08 02/04/09 03/10/09 03/16/09 04/23/09 03/28/11 05/28/11 08/04/11

SHEET 21 OF 64

FILE => TBDRW07-e-fdp101.dgn

USERNAME => s124196 DATE PLOTTED => 01-OCT-2012 TIME PLOTTED => 06:34

DIST	COUNTY	ROUTE	POST MILES TOTAL PROJECT	SHEET No	TOTAL SHEETS
05	SCr	17	6.0/12.6	219	284

REGISTERED CIVIL ENGINEER — DATE 8/4/11

9-24-12
PLANS APPROVAL DATE

REGISTERED PROFESSIONAL ENGINEER — T. Dudley — No. C039514 — Exp. 12/31/11 — CIVIL — STATE OF CALIFORNIA

The State of California or its officers or agents shall not be responsible for the accuracy or completeness of electronic copies of this plan sheet.

AECOM TECHNICAL SERVICES, INC.
2020 L STREET, SUITE 300
SACRAMENTO, CALIFORNIA 95811

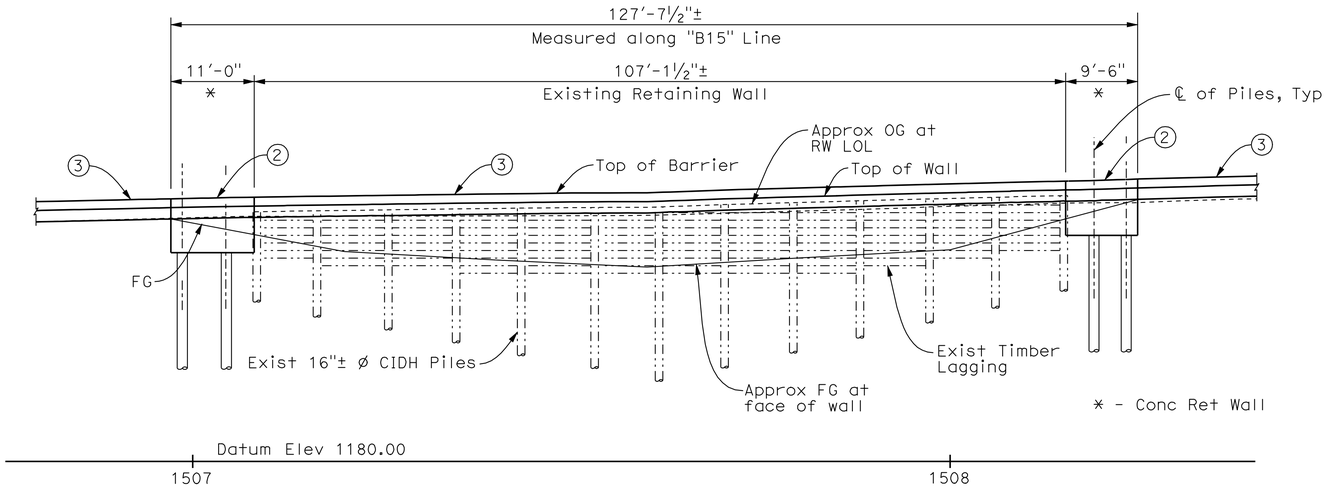

ELEVATION
1" = 10'

CURVE DATA TABLE

	R	Δ	T	L
A	784.00	38°37'47"	274.78	528.58
B	300.00	1°48'54"	4.75	9.50

QUANTITIES

STRUCTURE EXCAVATION (RETAINING WALL)	14	CY
STRUCTURE EXCAVATION (TYPE Z-2) (AERIALLY DEPOSITED LEAD)	3	CY
STRUCTURE BACKFILL (RETAINING WALL)	5	CY
24" CAST-IN-DRILLED-HOLE CONCRETE PILING (RETAINING WALL)	53	LF
STRUCTURAL CONCRETE, RETAINING WALL	8	CY
BAR REINFORCING STEEL (RETAINING WALL)	3,623	LB
CONCRETE BARRIER (TYPE 732 MODIFIED)	21	LF

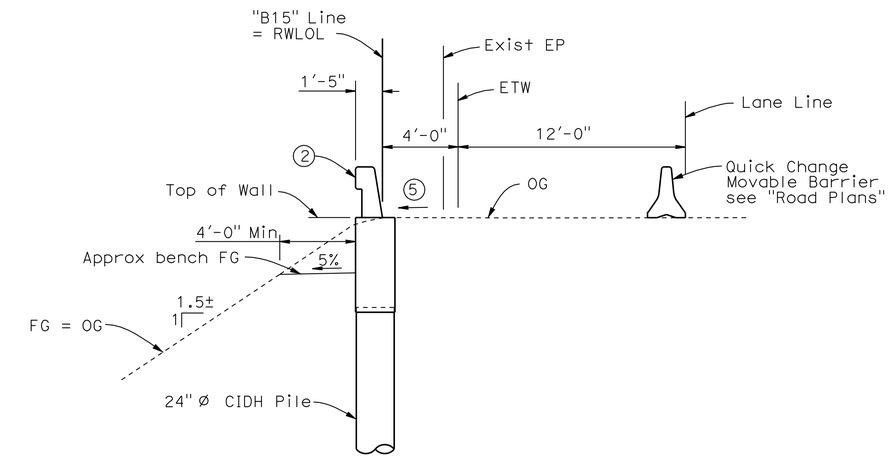

TYPICAL SECTION
¼" = 1'-0"

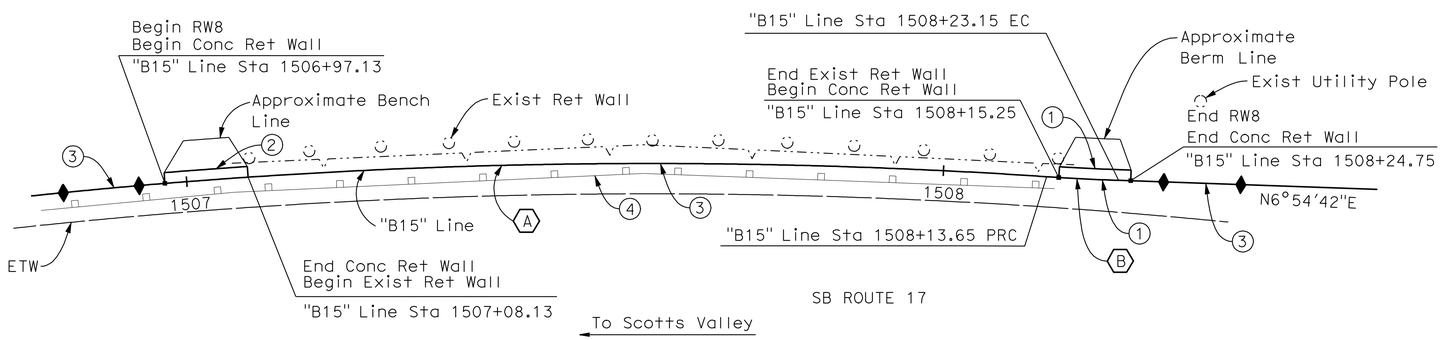

PLAN
1" = 10'

LEGEND:

1. Paint "Br No. 36E-0027"
2. Concrete Barrier Type 732 (MOD)
3. Concrete Barrier Type 732B, see "Road Plans"
4. Exist MBGR to be removed, see "Road Plans"
5. Match existing cross slope

Note:
The Contractor shall verify all controlling field dimensions before ordering or fabricating any material.

DESIGN OVERSIGHT — Wei An
8-10-11
SIGN OFF DATE

	BY	CHECKED			
DESIGN	T. Dudley	R. Price	LOAD & RESISTANCE FACTOR DESIGN	LIVE LOADING: HS20-44 AND ALTERNATIVE AND PERMIT DESIGN LOAD	
DETAILS	S. Desalegn	R. Price	LAYOUT	S. Desalegn	T. Dudley
QUANTITIES	T. Dudley	E. Nevarez	SPECIFICATIONS	T. Dudley	PLANS AND SPECS COMPARED

PREPARED FOR THE STATE OF CALIFORNIA DEPARTMENT OF TRANSPORTATION

Stephen Mislinski
PROJECT ENGINEER

BRIDGE NO. 36E-0027
POST MILES 9.26

RETAINING WALLS
RW NO. 8 GENERAL PLAN

DESIGN GENERAL PLAN SHEET (ENGLISH) (REV.2/25/05)

ORIGINAL SCALE IN INCHES FOR REDUCED PLANS 0 1 2 3

CU 05
EA OL7014

DISREGARD PRINTS BEARING EARLIER REVISION DATES

REVISION DATES (PRELIMINARY STAGE ONLY): 9/30/08 12/01/08 02/04/09 03/16/09 03/16/09 04/27/09 03/25/11 05/25/11 08/04/11 8-9-11

SHEET 22 OF 64

FILE => TBDRW08-a-gp01.dgn

USERNAME => s124196 DATE PLOTTED => 01-OCT-2012 TIME PLOTTED => 06:34

DIST	COUNTY	ROUTE	POST MILES TOTAL PROJECT	SHEET No	TOTAL SHEETS
05	SCr	17	6.0/12.6	220	284

REGISTERED CIVIL ENGINEER — DATE 8/4/11

9-24-12
PLANS APPROVAL DATE

REGISTERED PROFESSIONAL ENGINEER — T. Dudley — No. C039514 — Exp. 12/31/11 — CIVIL — STATE OF CALIFORNIA

The State of California or its officers or agents shall not be responsible for the accuracy or completeness of electronic copies of this plan sheet.

AECOM TECHNICAL SERVICES, INC.
2020 L STREET, SUITE 300
SACRAMENTO, CALIFORNIA 95811

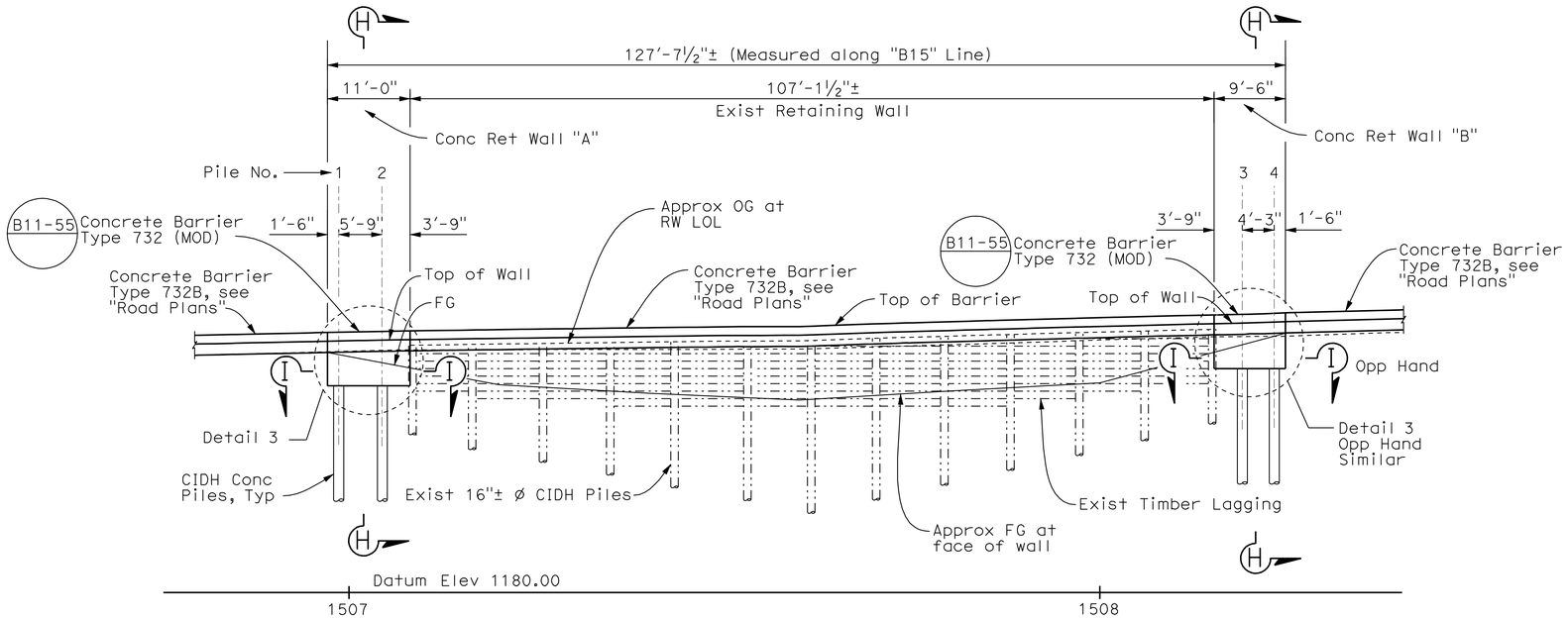

DEVELOPED ELEVATION

1" = 10'-0"

PILE DATA TABLE

Retaining Wall	Station along "B15" Line	Pile No.	Top of Pile Elev	Bottom of Pile Elev	Pile Section	Finished Grade Bench Elev
A	1506+98.63	1	1207.86	1194.61	24"ø CIDH	1211.15
	1507+04.38	2	1207.86	1194.61	24"ø CIDH	1210.30
B	1508+19.00	3	1209.83	1196.58	24"ø CIDH	1212.33
	1508+23.25	4	1209.83	1196.58	24"ø CIDH	1212.94

Note:

1. For Section H-H, Section I-I and Detail 3, see "Details No. 4" sheet.
2. For CIDH Pile details, see "Details No. 5" sheet.

Note:
The Contractor shall verify all controlling field dimensions before ordering or fabricating any material.

DESIGN OVERSIGHT — Wei An
SIGN OFF DATE

	BY	CHECKED
DESIGN	T. Dudley	R. Price
DETAILS	S. Desalegn	R. Price
QUANTITIES	T. Dudley	E. Nevarez

PREPARED FOR THE STATE OF CALIFORNIA DEPARTMENT OF TRANSPORTATION

Stephen J. Mislinski
PROJECT ENGINEER

BRIDGE NO. 36E-0027
POST MILE 9.26

RETAINING WALLS
RW NO. 8 STRUCTURE PLAN

DESIGN DETAIL SHEET (ENGLISH) (REV. 2/25/05)

ORIGINAL SCALE IN INCHES FOR REDUCED PLANS 0 1 2 3

CU 05
EA 0L7014

DISREGARD PRINTS BEARING EARLIER REVISION DATES

REVISION DATES (PRELIMINARY STAGE ONLY): 9/30/08 12/09/08 02/04/09 03/10/09 03/16/09 04/23/09 03/25/11 05/25/11 08/04/11

SHEET 23 OF 64

FILE => TBDRW08-c-sp01.dgn

USERNAME => s124496 DATE PLOTTED => 01-OCT-2012 TIME PLOTTED => 06:34

DIST	COUNTY	ROUTE	POST MILES TOTAL PROJECT	SHEET No	TOTAL SHEETS
05	SCr	17	6.0/12.6	221	284

REGISTERED CIVIL ENGINEER — DATE 8/4/11

9-24-12
PLANS APPROVAL DATE

The State of California or its officers or agents shall not be responsible for the accuracy or completeness of electronic copies of this plan sheet.

REGISTERED PROFESSIONAL ENGINEER — T. Dudley — No. C039514 — Exp. 12/31/11 — CIVIL — STATE OF CALIFORNIA

AECOM TECHNICAL SERVICES, INC.
2020 L STREET, SUITE 300
SACRAMENTO, CALIFORNIA 95811

CURVE DATA TABLE

	R	Δ	T	L
A	784.00	38°37′47″	274.78	528.58
B	300.00	1°48′54″	4.75	9.50

LEGEND:

1207.61 Indicates bottom of Conc Ret Wall elevation

BENCH MARK

PRHV PM9.15 (Not Shown on Sheet)
2.47 Lt of "B15" Line
Sta 1505+04.40
N= 1862750.897,
E= 6130756.311,
ELEV= 1204.003

PRHV PM 9.21
3.07 Lt of "B15" Line
Sta 1508+30.11
N= 1863074.735,
E= 6130743.949,
ELEV 1214.099

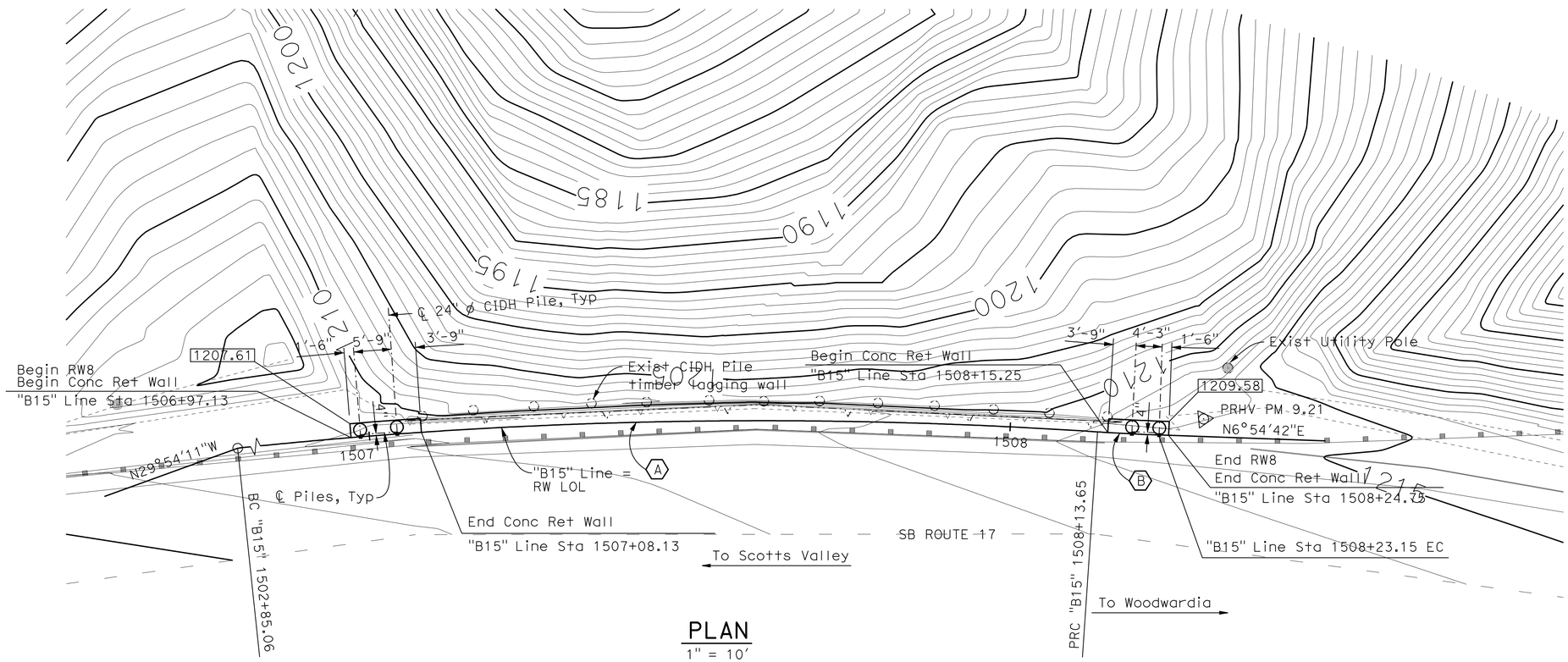

PLAN
1" = 10′

Note:
The Contractor shall verify all controlling field dimensions before ordering or fabricating any material.

GEOTECHNICAL PROFESSIONAL APPROVAL DATE

DESIGN OVERSIGHT Wei An	SCALE: As Shown	VERT.DATUM NAVD 1988	HORZ.DATUM NAD 1983	DESIGN	BY T. Dudley	CHECKED R. Price	PREPARED FOR THE STATE OF CALIFORNIA DEPARTMENT OF TRANSPORTATION
	PHOTOGRAMMETRY AS OF: X	ALIGNMENT TIES Dist. Traverse Sheet		DETAILS	BY S. Desalegn	CHECKED R. Price	
	SURVEYED BY X	DRAFTED BY X		QUANTITIES	BY T. Dudley	CHECKED E. Nevarez	
SIGN OFF DATE	FIELD CHECKED BY X	CHECKED BY X					

Stephen J. Mislinski
PROJECT ENGINEER

BRIDGE NO. 36E-0027
POST MILE 9.26

RETAINING WALLS
RW NO. 8 FOUNDATION PLAN

DESIGN DETAIL SHEET (ENGLISH) (REV. 2/25/05)

ORIGINAL SCALE IN INCHES FOR REDUCED PLANS 0 1 2 3

CU 05
EA 0L7014

DISREGARD PRINTS BEARING EARLIER REVISION DATES

REVISION DATES (PRELIMINARY STAGE ONLY): 9/18/08 12/09/08 02/04/09 03/10/09 03/16/09 04/23/09 03/28/11 05/25/11 08/04/11

SHEET 24 OF 64

FILE => TBDRW08-e-fdp101.dgn

USERNAME => s124496 DATE PLOTTED => 01-OCT-2012 TIME PLOTTED => 07:26

DIST	COUNTY	ROUTE	POST MILES TOTAL PROJECT	SHEET No	TOTAL SHEETS
05	SCr	17	6.0/12.6	222	284

REGISTERED CIVIL ENGINEER 8/4/11 DATE

9-24-12
PLANS APPROVAL DATE

REGISTERED PROFESSIONAL ENGINEER STEPHEN J. MISLINSKI No. C61834 Exp. 6/30/13 CIVIL STATE OF CALIFORNIA

The State of California or its officers or agents shall not be responsible for the accuracy or completeness of electronic copies of this plan sheet.

AECOM TECHNICAL SERVICES, INC.
2020 L STREET, SUITE 300
SACRAMENTO, CALIFORNIA 95811

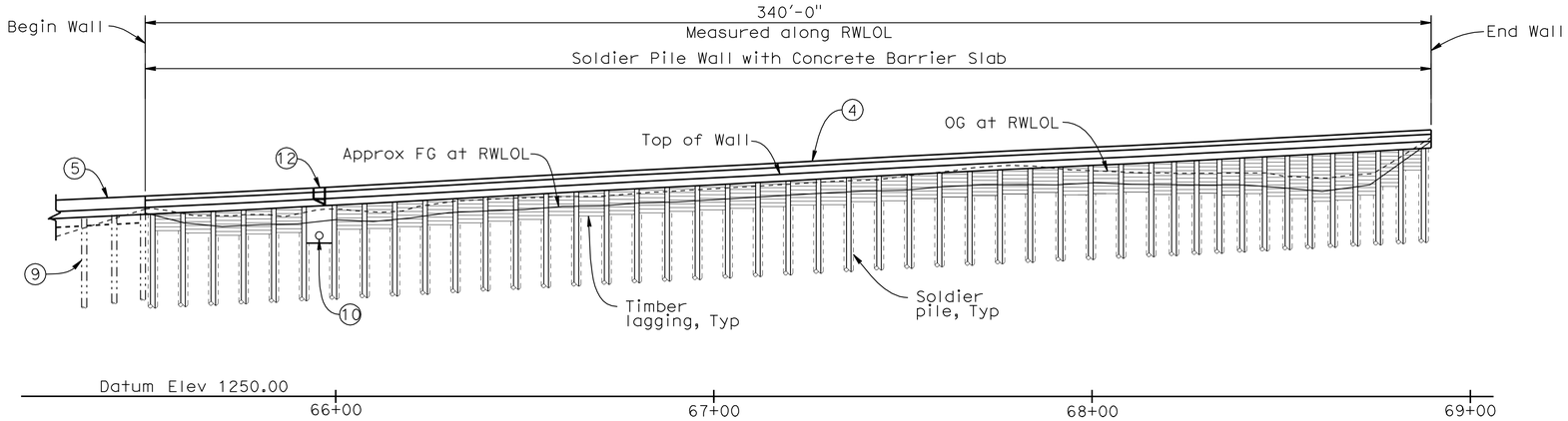

DEVELOPED MIRROR ELEVATION

1" = 20'

QUANTITIES

30" DRILLED HOLE	1,452	LF
STRUCTURE EXCAVATION (SOLDIER PILE WALL)	143	CY
STRUCTURE EXCAVATION (TYPE Z-2)	95	CY
(AERIALLY DEPOSITED LEAD)		
STRUCTURE BACKFILL (SOLDIER PILE WALL)	47	CY
CONCRETE BACKFILL	186	CY
LEAN CONCRETE BACKFILL	59	CY
INSTALL STEEL SOLDIER PILING	46	EA
STRUCTURAL CONCRETE, BARRIER SLAB	126	CY
MINOR CONCRETE	4	CY
(DRAINAGE INLET)		
INSTALL TIMBER LAGGING	LUMP	SUM
CLEAN AND PAINT STEEL	LUMP	SUM
SOLDIER PILING		
MISCELLANEOUS IRON AND STEEL	239	LB
MISCELLANEOUS METAL	330	LB
(MAINTENANCE PLATFORM)		
CONCRETE BARRIER (TYPE 736 MODIFIED)	340	LF

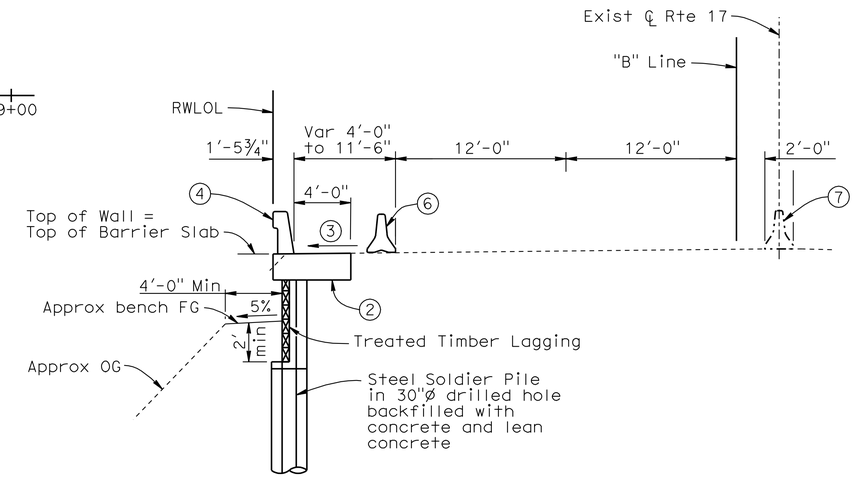

TYPICAL SECTION

3/16" = 1'-0"

LEGEND:

1. Paint "Br No. 36E-0028"
2. Concrete Barrier Slab on Soldier Pile Wall
3. 5% cross slope
4. Concrete Barrier Type 736 (Mod)
5. Concrete Barrier Type 736B, see "Road Plans"
6. QCMB (Quickchange Movable Barreir), see "Road Plans"
7. Exist Concrete Barrier Type 50
8. Exist MBGR & Dike to be removed, see "Road Plans"
9. Exist CIDH Pile Timber Lagging Wall
10. Drainage outlet, see "Road Plans"
11. Drainage inlet, see "Drainage Inlet Details" sheet
12. Maintenance platform, see "Maintenance platform Details No. 1" sheet

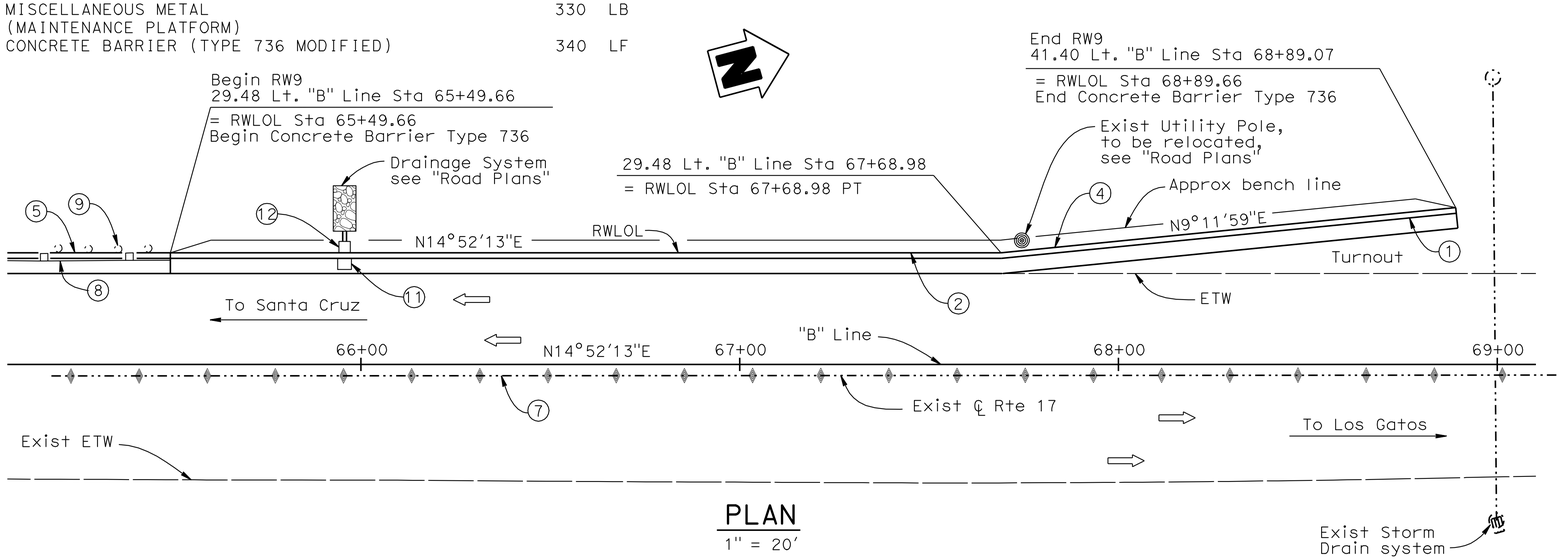

PLAN

1" = 20'

Note:
The Contractor shall verify all controlling field dimensions before ordering or fabricating any material.

DESIGN OVERSIGHT Wei An 8-10-11 SIGN OFF DATE	DESIGN	BY S. Mislinski	CHECKED B. Fish	LOAD & RESISTANCE FACTOR DESIGN	LIVE LOADING: HS20-44 AND ALTERNATIVE AND PERMIT DESIGN LOAD	
	DETAILS	BY S. Desalegn	CHECKED B. Fish	LAYOUT	BY S. Desalegn	CHECKED S. MISLINSKI
	QUANTITIES	BY M. Stiller	CHECKED S. Desalegn	SPECIFICATIONS	BY T. Dudley	PLANS AND SPECS COMPARED

PREPARED FOR THE STATE OF CALIFORNIA DEPARTMENT OF TRANSPORTATION

Stephen Mislinski
PROJECT ENGINEER

BRIDGE NO. 36E-0028
POST MILES 9.7

RETAINING WALLS
RW NO. 9 GENERAL PLAN

DESIGN GENERAL PLAN SHEET (ENGLISH) (REV.2/25/05)

ORIGINAL SCALE IN INCHES FOR REDUCED PLANS 0 1 2 3

CU 05
EA OL7014

DISREGARD PRINTS BEARING EARLIER REVISION DATES

REVISION DATES (PRELIMINARY STAGE ONLY): 10/8/08 12/19/08 02/04/09 03/10/09 03/16/09 04/23/09 03/25/11 08/04/11 8-9-11

SHEET 25 OF 64

FILE => TBDRW09-a-gp01.dgn

USERNAME => s124496 DATE PLOTTED => 01-OCT-2012 TIME PLOTTED => 07:27

DIST	COUNTY	ROUTE	POST MILES TOTAL PROJECT	SHEET No	TOTAL SHEETS
05	SCr	17	6.0/12.6	223	284

REGISTERED CIVIL ENGINEER 8/4/11 DATE

9-24-12
PLANS APPROVAL DATE

REGISTERED PROFESSIONAL ENGINEER STEPHEN J. MISLINSKI No. C61834 Exp. 6/30/13 CIVIL STATE OF CALIFORNIA

The State of California or its officers or agents shall not be responsible for the accuracy or completeness of electronic copies of this plan sheet.

AECOM TECHNICAL SERVICES, INC.
2020 L STREET, SUITE 300
SACRAMENTO, CALIFORNIA 95811

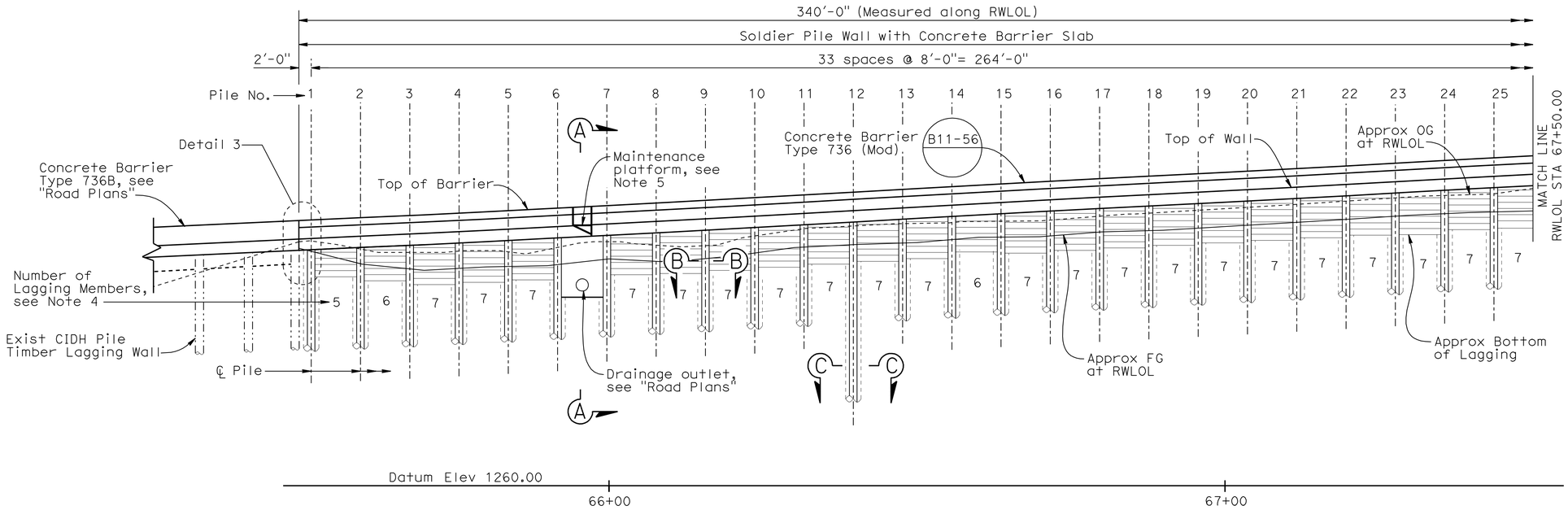

DEVELOPED MIRROR ELEVATION

1" = 10'

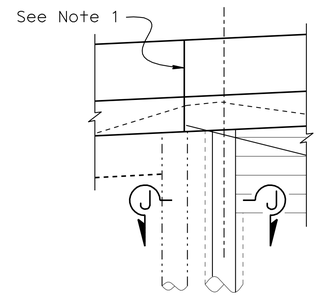

DETAIL 3

1/4" = 1'-0"

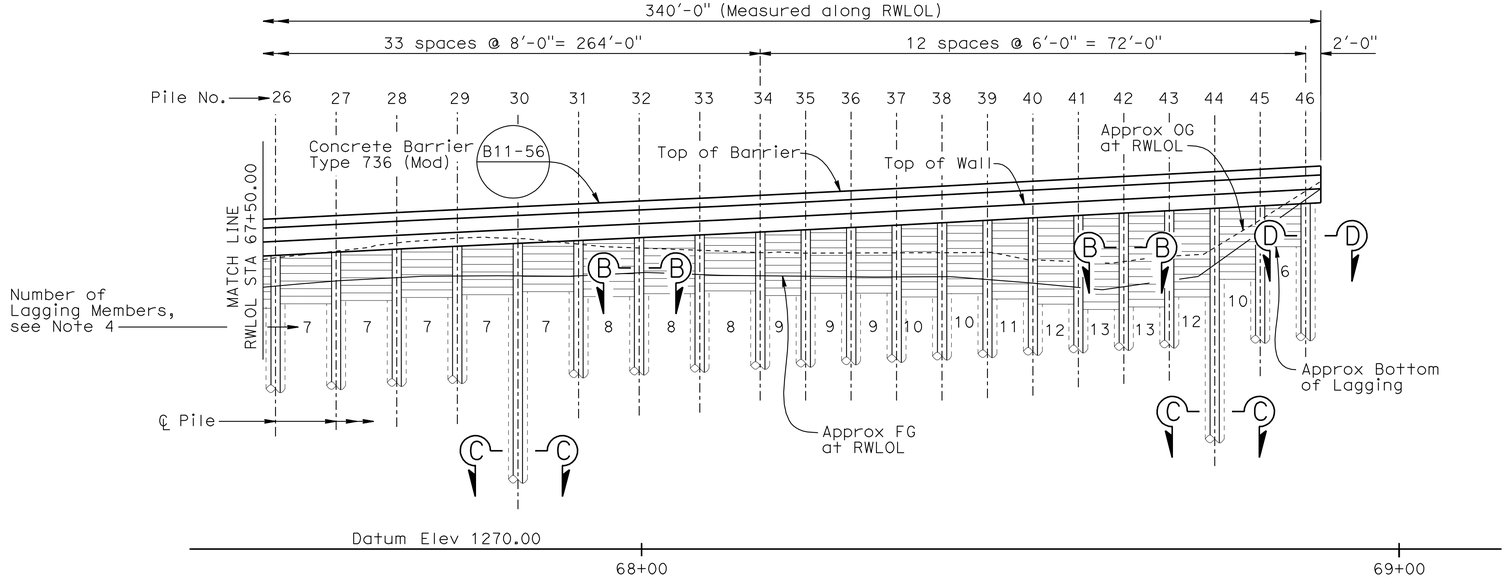

DEVELOPED MIRROR ELEVATION

1" = 10'

Notes:

1. Longitudinal reinforcement for barrier shall be continuous across joints.
2. For Section A-A, see "Details No. 1" sheet.
3. For Section B-B, Section C-C, Section D-D and Section J-J, see "Details No. 2" sheet.
4. Number of lagging members shown are approximate only. Contractor shall install lagging to a depth of 2 feet below the finished grade at the face of the soldier pile wall.
5. For Maintenance Platform Details, see "Maintenance Platform Details No. 1" sheet.

Note:
The Contractor shall verify all controlling field dimensions before ordering or fabricating any material.

DESIGN OVERSIGHT: Wei An	DESIGN	BY S. Mislinski	CHECKED B. Fish
SIGN OFF DATE	DETAILS	BY S. Desalegn	CHECKED B. Fish
	QUANTITIES	BY M. Stiller	CHECKED S. Desalegn

PREPARED FOR THE STATE OF CALIFORNIA DEPARTMENT OF TRANSPORTATION

Stephen J. Mislinski
PROJECT ENGINEER

BRIDGE NO. 36E-0028
POST MILE 9.7

RETAINING WALLS
RW NO. 9 STRUCTURE PLAN

DESIGN DETAIL SHEET (ENGLISH) (REV. 2/25/05)

ORIGINAL SCALE IN INCHES FOR REDUCED PLANS 0 1 2 3

CU 05
EA 0L7014

DISREGARD PRINTS BEARING EARLIER REVISION DATES

REVISION DATES (PRELIMINARY STAGE ONLY): 10/16/08 12/01/08 02/04/09 03/10/09 03/16/09 04/23/09 03/28/11 05/25/11 08/04/11

SHEET 26 OF 64

FILE => TBDRW09-c-sp01.dgn

USERNAME => s124196 DATE PLOTTED => 01-OCT-2012 TIME PLOTTED => 07:27

DIST	COUNTY	ROUTE	POST MILES TOTAL PROJECT	SHEET No	TOTAL SHEETS
05	SCr	17	6.0/12.6	224	284

REGISTERED CIVIL ENGINEER 8/4/11 DATE

9-24-12
PLANS APPROVAL DATE

REGISTERED PROFESSIONAL ENGINEER STEPHEN J. MISLINSKI No. C61834 Exp. 6/30/13 CIVIL STATE OF CALIFORNIA

The State of California or its officers or agents shall not be responsible for the accuracy or completeness of electronic copies of this plan sheet.

AECOM TECHNICAL SERVICES, INC.
2020 L STREET, SUITE 300
SACRAMENTO, CALIFORNIA 95811

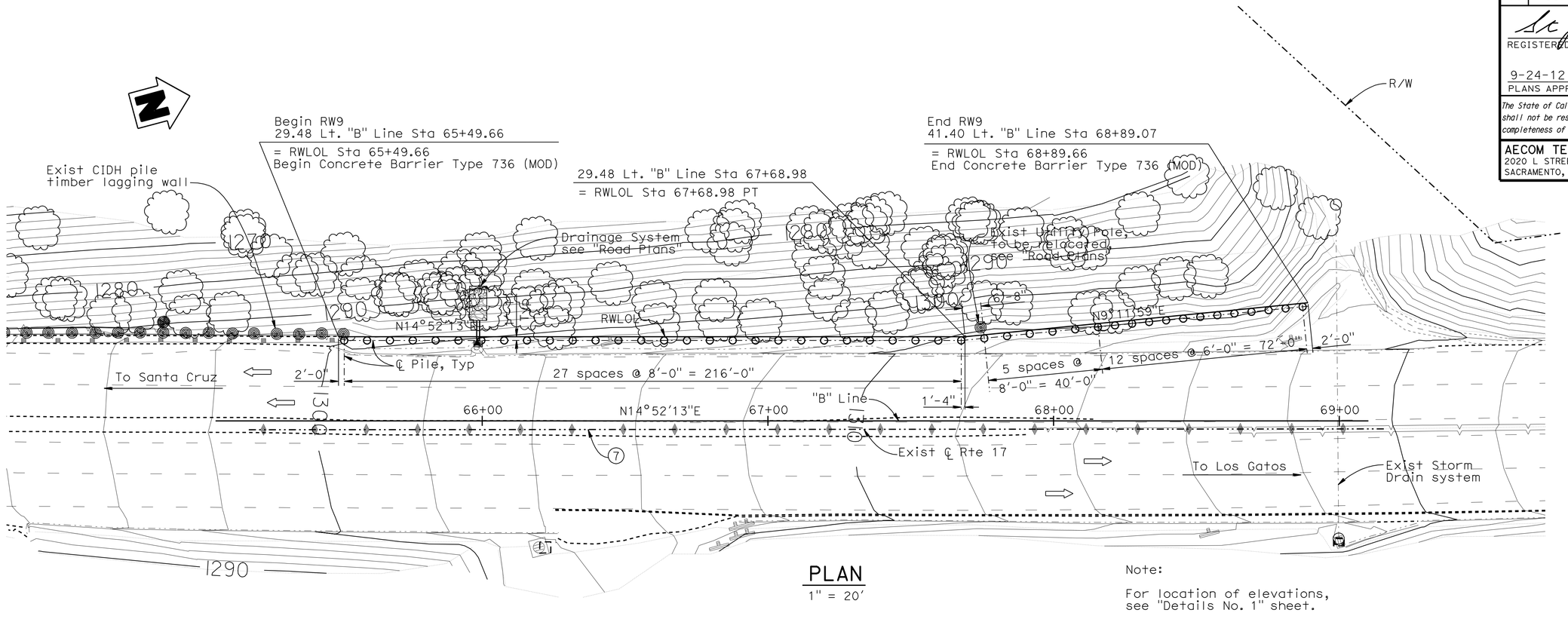

PLAN
1" = 20'

Note:
For location of elevations, see "Details No. 1" sheet.

BENCH MARKS

PM9541 (Not shown on Plan)
N = 1864291,
E = 6131687
Elev = 1218.925

PM1017 (Not Shown on Plan)
N = 1867244,
E = 6131782,
Elev = 1391.342

PILE DATA TABLE

Station along RWLOL	Pile No.	Top of Pile Elev	Concrete Cut-off Elev	Bottom of Drilled Hole Elev	Pile Section	FG at RWLOL Elev
(ft)		(ft)	(ft)	(ft)		(ft)
65+51.66	1	1298.82	1293.15	1268.57	W14x132	1298.09
65+59.66	2	1299.21	1292.76	1268.96	W14x132	1296.10
65+67.66	3	1299.64	1292.76	1269.39	W14x132	1295.26
65+75.66	4	1300.06	1292.76	1269.81	W14x132	1295.33
65+83.66	5	1300.49	1292.83	1270.24	W14x132	1295.64
65+91.66	6	1300.93	1293.14	1270.68	W14x132	1295.95
65+99.66	7	1301.36	1293.45	1271.11	W14x132	1296.83
66+07.66	8	1301.78	1293.98	1271.53	W14x132	1296.48
66+15.66	9	1302.21	1293.98	1271.96	W14x132	1296.92
66+23.66	10	1302.61	1294.42	1272.36	W14x132	1297.84
66+31.66	11	1303.00	1295.34	1272.75	W14x132	1298.78
66+39.66	12	1303.38	1296.28	1273.13	W14x132	1299.18
66+47.66	13	1303.77	1296.68	1273.52	W14x132	1299.45
66+55.66	14	1304.15	1296.95	1273.90	W14x132	1300.01
66+63.66	15	1304.54	1297.51	1274.29	W14x132	1300.42

Station along RWLOL	Pile No.	Top of Pile Elev	Concrete Cut-off Elev	Bottom of Drilled Hole Elev	Pile Section	FG at RWLOL Elev
(ft)		(ft)	(ft)	(ft)		(ft)
66+71.66	16	1304.93	1297.92	1274.68	W14x132	1300.61
66+79.66	17	1305.31	1298.11	1275.06	W14x132	1301.25
66+87.66	18	1305.70	1298.75	1275.45	W14x132	1301.47
66+95.66	19	1306.09	1298.97	1275.84	W14x132	1301.87
67+03.66	20	1306.48	1299.37	1276.23	W14x132	1302.34
67+11.66	21	1306.87	1299.84	1276.62	W14x132	1302.82
67+19.66	22	1307.26	1300.32	1277.01	W14x132	1303.30
67+27.66	23	1307.68	1300.80	1277.43	W14x132	1303.81
67+35.66	24	1308.09	1301.31	1277.84	W14x132	1304.21
67+43.66	25	1308.51	1301.71	1278.26	W14x132	1304.49
67+51.66	26	1308.93	1301.99	1278.68	W14x132	1304.79
67+59.66	27	1309.35	1302.29	1279.10	W14x132	1305.48
67+67.66	28	1309.75	1302.98	1279.50	W14x132	1305.91
67+75.66	29	1310.14	1303.41	1279.89	W14x132	1306.12
67+83.66	30	1310.54	1303.62	1280.29	W14x132	1306.14

Station along RWLOL	Pile No.	Top of Pile Elev	Concrete Cut-off Elev	Bottom of Drilled Hole Elev	Pile Section	FG at RWLOL Elev
(ft)		(ft)	(ft)	(ft)		(ft)
67+91.66	31	1310.93	1303.64	1280.68	W14x132	1306.15
67+99.66	32	1311.33	1303.65	1281.08	W14x132	1306.56
68+07.66	33	1311.73	1303.67	1281.48	W14x132	1306.33
68+15.66	34	1312.13	1303.61	1281.88	W14x132	1306.17
68+21.66	35	1312.43	1303.54	1277.18	W14x132	1306.11
68+27.66	36	1312.77	1303.51	1277.52	W14x132	1306.04
68+33.66	37	1313.10	1303.51	1277.85	W14x132	1306.01
68+39.66	38	1313.44	1303.16	1278.19	W14x132	1306.03
68+45.66	39	1313.77	1302.69	1278.52	W14x132	1305.66
68+51.66	40	1314.09	1302.12	1278.84	W14x132	1305.19
68+57.66	41	1314.42	1302.12	1279.17	W14x132	1304.62
68+63.66	42	1314.74	1302.12	1279.49	W14x132	1304.70
68+69.66	43	1315.05	1302.20	1279.80	W14x132	1305.54
68+75.66	44	1315.37	1303.04	1280.12	W14x132	1307.64
68+81.66	45	1315.68	1305.14	1280.43	W14x132	1311.92
68+87.66	46	1315.99	1309.32	1280.74	W14x132	1316.21

Note:
The Contractor shall verify all controlling field dimensions before ordering or fabricating any material.

GEOTECHNICAL PROFESSIONAL APPROVAL DATE

DESIGN OVERSIGHT Wei An
SIGN OFF DATE

SCALE: As Shown | VERT.DATUM NAVD 1988 | HORZ.DATUM NAD 1983
PHOTOGRAMMETRY AS OF: X | ALIGNMENT TIES Dist. Traverse Sheet
SURVEYED BY X | DRAFTED BY X
FIELD CHECKED BY X | CHECKED BY X

DESIGN BY S. MISLINSKI CHECKED B. Fish
DETAILS BY M. STILLER CHECKED B. Fish
QUANTITIES BY M. Stiller CHECKED S. Desalegn

PREPARED FOR THE STATE OF CALIFORNIA DEPARTMENT OF TRANSPORTATION

Stephen J. Mislinski
PROJECT ENGINEER

BRIDGE NO. 36E-0028
POST MILE 9.7

RETAINING WALLS
RW NO. 9 FOUNDATION PLAN

DESIGN DETAIL SHEET (ENGLISH) (REV. 2/25/05)

ORIGINAL SCALE IN INCHES FOR REDUCED PLANS 0 1 2 3

CU 05
EA 0L7014

DISREGARD PRINTS BEARING EARLIER REVISION DATES
REVISION DATES (PRELIMINARY STAGE ONLY) 10/16/08 12/04/08 02/04/09 03/16/09 03/16/09 04/23/09 01/28/11 05/26/11 08/04/11

SHEET 27 OF 64

FILE => TBDRW09-e-fdp101.dgn

USERNAME => s124896 DATE PLOTTED => 01-OCT-2012 TIME PLOTTED => 07:27

DIST	COUNTY	ROUTE	POST MILES TOTAL PROJECT	SHEET No	TOTAL SHEETS
05	SCr	17	6.0/12.6	225	284

REGISTERED CIVIL ENGINEER 8/4/11 DATE

9-24-12
PLANS APPROVAL DATE

REGISTERED PROFESSIONAL ENGINEER T. Dudley No. C039514 Exp. 12/31/11 CIVIL STATE OF CALIFORNIA

The State of California or its officers or agents shall not be responsible for the accuracy or completeness of electronic copies of this plan sheet.

AECOM TECHNICAL SERVICES, INC.
2020 L STREET, SUITE 300
SACRAMENTO, CALIFORNIA 95811

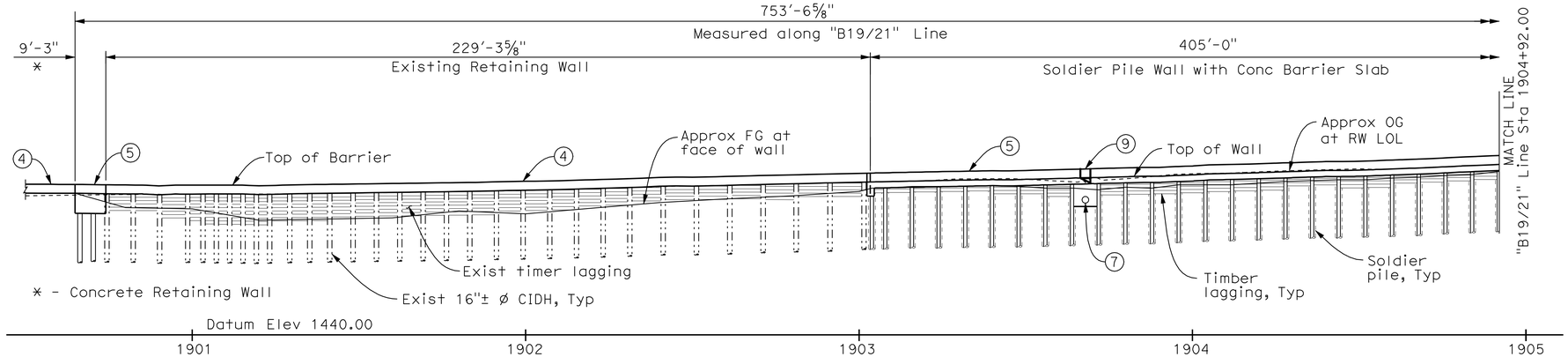

DEVELOPED ELEVATION

1" = 20'

QUANTITIES

24" DRILLED HOLE	1,010	LF
STRUCTURE EXCAVATION (RETAINING WALL)	5	CY
STRUCTURE EXCAVATION (SOLDIER PILE WALL)	80	CY
STRUCTURE EXCAVATION (TYPE Z-2) (AERIALLY DEPOSITED LEAD)	398	CY
STRUCTURE BACKFILL (RETAINING WALL)	3	CY
STRUCTURE BACKFILL (SOLDIER PILE WALL)	35	CY
CONCRETE BACKFILL	100	CY
LEAN CONCRETE BACKFILL	19	CY
INSTALL STEEL SOLDIER PILING	52	EA
24" CAST-IN-DRILLED-HOLE CONCRETE PILING (RETAINING WALL)	36	LF
STRUCTURAL CONCRETE, RETAINING WALL	6	CY
STRUCTURAL CONCRETE, BARRIER SLAB	209	CY
MINOR CONCRETE (DRAINAGE INLET)	4	CY
BAR REINFORCING STEEL (RETAINING WALL)	2,437	LB
INSTALL TIMBER LAGGING	LUMP	SUM
CLEAN AND PAINT STEEL SOLDIER PILING	LUMP	SUM
MISCELLANEOUS IRON AND STEEL	478	LB
MISCELLANEOUS METAL (MAINTENANCE PLATFORM)	612	LB
CONCRETE BARRIER (TYPE 732 MODIFIED)	524	LF

CURVE DATA TABLE

	R	Δ	T	L
A	300.00	2°51'45"	7.50	14.99
B	571.00	18°19'39"	92.11	182.65
C	496.00	28°34'54"	126.34	247.43

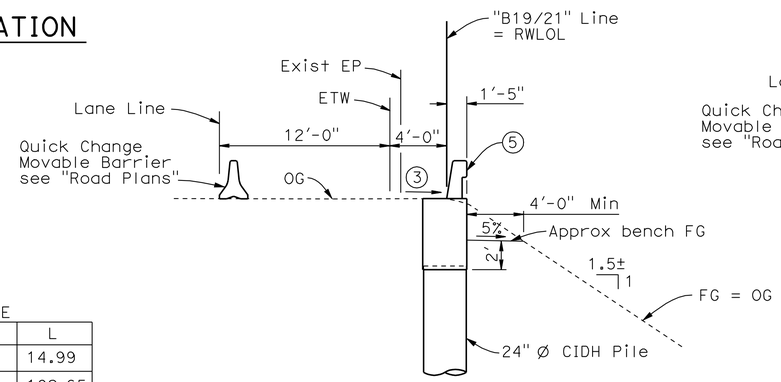

CONCRETE RETAINING WALL

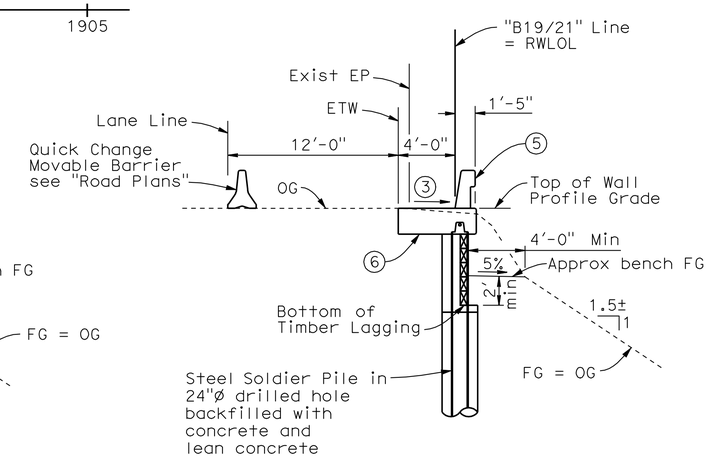

CONCRETE BARRIER SLAB ON SOLDIER PILE WALL

TYPICAL SECTIONS

3/16" = 1'-0"

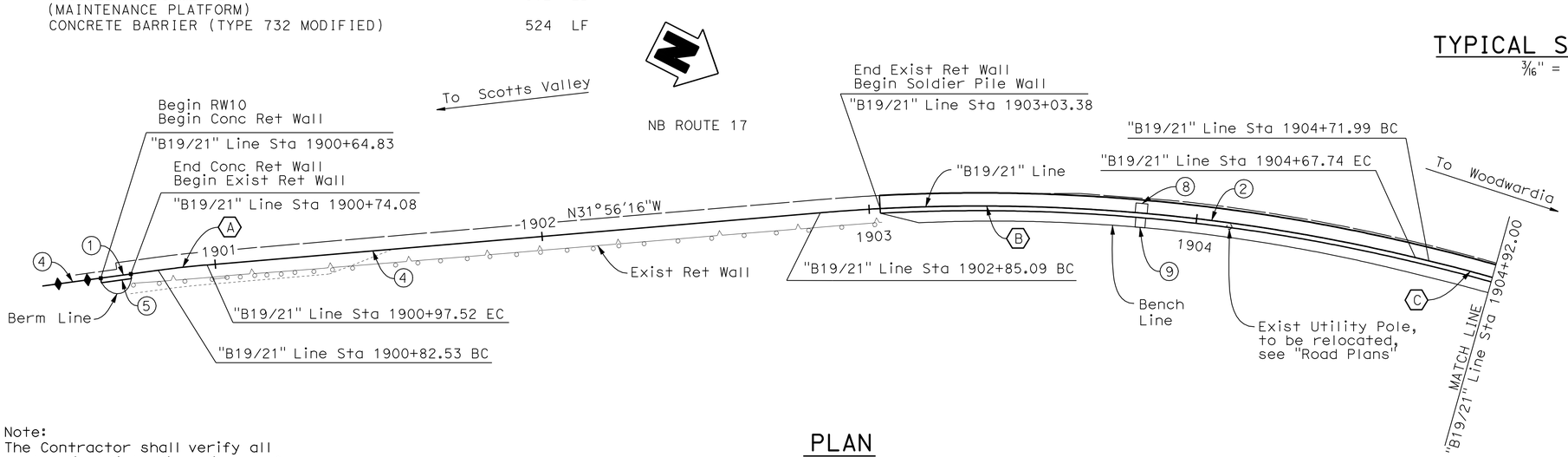

PLAN

1" = 20'

LEGEND:

1. Paint "Br No. 36E-0029"
2. Soldier Pile Wall with Concrete Barrier Slab
3. Match existing cross slope
4. Concrete Barrier Type 732B, see "Road Plans"
5. Concrete Barrier Type 732 (MOD)
6. Concrete Barrier Slab
7. Drainage outlet, see "Road Plans"
8. Drainage inlet, see "Drainage Inlet Details" sheet
9. Maintenance platform, see "Maintenance Platform Details No. 1" sheet

Note:
The Contractor shall verify all controlling field dimensions before ordering or fabricating any material.

DESIGN OVERSIGHT Wei An
8-10-11
SIGN OFF DATE

	BY	CHECKED				
DESIGN	T. Dudley	R. Price	LOAD & RESISTANCE FACTOR DESIGN	LIVE LOADING: HS20-44 AND ALTERNATIVE AND PERMIT DESIGN LOAD		
DETAILS	S. Desalegn	R. Price	LAYOUT	S. Desalegn	T. Dudley	
QUANTITIES	T. Dudley	E. Nevarez	SPECIFICATIONS	T. Dudley	PLANS AND SPECS COMPARED	

PREPARED FOR THE STATE OF CALIFORNIA DEPARTMENT OF TRANSPORTATION

Stephen Mislinski
PROJECT ENGINEER

BRIDGE NO. 36E-0029
POST MILES 10.54

RETAINING WALLS
RW NO. 10 GENERAL PLAN NO. 1

DESIGN GENERAL PLAN SHEET (ENGLISH) (REV.2/25/05)

ORIGINAL SCALE IN INCHES FOR REDUCED PLANS 0 1 2 3

CU 05
EA OL7014

DISREGARD PRINTS BEARING EARLIER REVISION DATES

REVISION DATES (PRELIMINARY STAGE ONLY): 9/30/08 12/09/08 02/04/09 03/16/09 03/16/09 04/23/09 03/28/11 05/25/11 08/04/11 8-9-11

SHEET 28 OF 64

FILE => TBDRW10-a-gp01.dgn

USERNAME => s1241496 DATE PLOTTED => 01-OCT-2012 TIME PLOTTED => 07:27

DIST	COUNTY	ROUTE	POST MILES TOTAL PROJECT	SHEET No	TOTAL SHEETS
05	SCr	17	6.0/12.6	226	284

REGISTERED CIVIL ENGINEER 8/4/11 DATE

9-24-12
PLANS APPROVAL DATE

REGISTERED PROFESSIONAL ENGINEER T. Dudley No. C039514 Exp. 12/31/11 CIVIL STATE OF CALIFORNIA

The State of California or its officers or agents shall not be responsible for the accuracy or completeness of electronic copies of this plan sheet.

AECOM TECHNICAL SERVICES, INC.
2020 L STREET, SUITE 300
SACRAMENTO, CALIFORNIA 95811

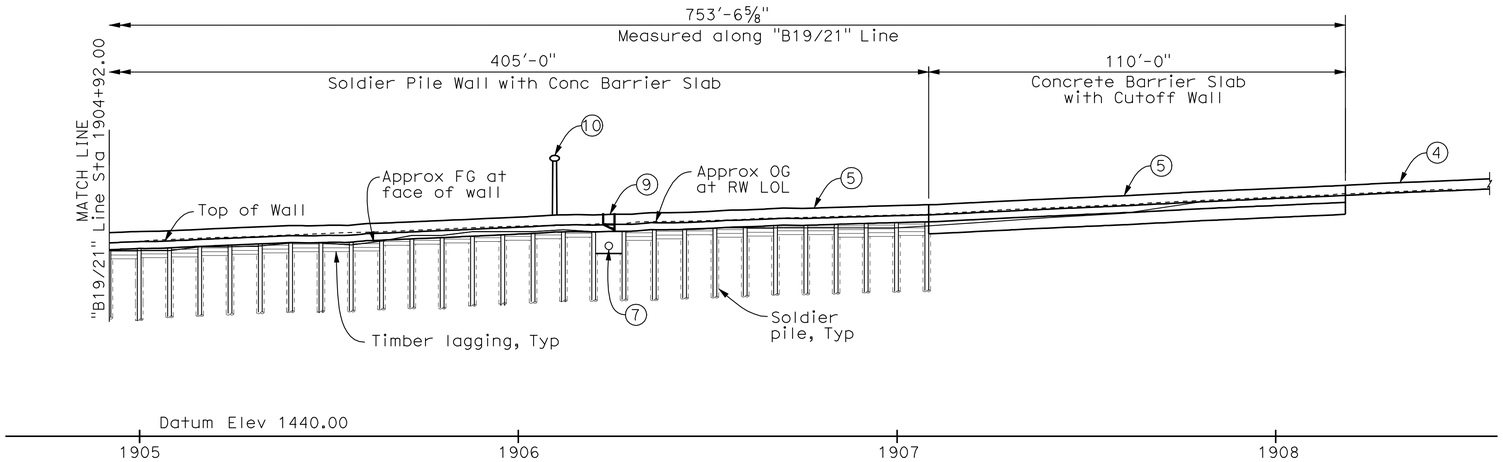

DEVELOPED ELEVATION

1" = 20'

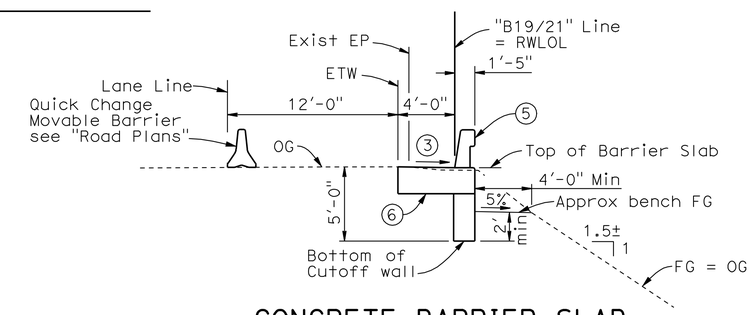

CONCRETE BARRIER SLAB WITH CUTOFF WALL TYPICAL SECTION

3/16" = 1'-0"

CURVE DATA TABLE

	R	Δ	T	L
C	496.00	28°34'54"	126.34	247.43
D	496.00	30°14'39"	134.04	261.82

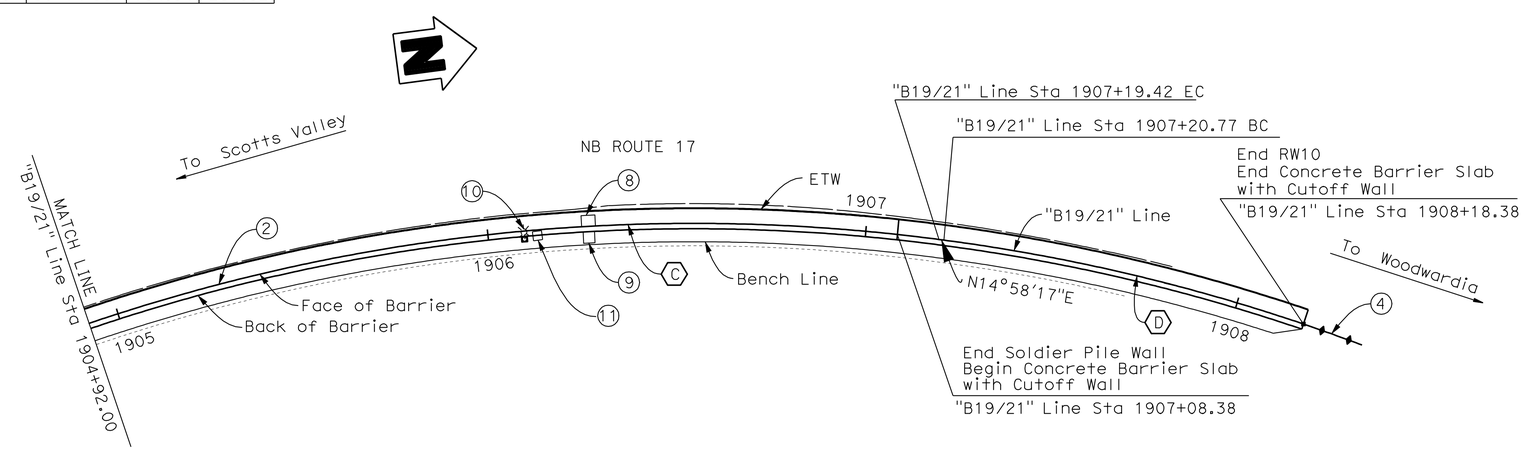

PLAN

1" = 20'

LEGEND:

2. Soldier Pile Wall with Concrete Barrier Slab
3. Match existing cross slope
4. Concrete Barrier Type 732B, see "Road Plans"
5. Concrete Barrier Type 732 (MOD)
6. Concrete Barrier Slab
7. Drainage outlet, see "Road Plans"
8. Drainage inlet, see "Drainage Inlet Details" sheet
9. Maintenance platform, see "Maintenance Platform Details No. 1" sheet
10. Lighting Standard Type 15-88, Relocate to top of Concrete Barrier, See "Electrical Plans"
11. Electrical Pull Box, see "Road Plans"

Note:
The Contractor shall verify all controlling field dimensions before ordering or fabricating any material.

DESIGN OVERSIGHT Wei An	DESIGN	BY T. Dudley	CHECKED R. Price	LOAD & RESISTANCE FACTOR DESIGN	LIVE LOADING: HS20-44 AND ALTERNATIVE AND PERMIT DESIGN LOAD
	DETAILS	BY S. Desalegn	CHECKED R. Price	LAYOUT BY S. Desalegn	CHECKED T. Dudley
SIGN OFF DATE	QUANTITIES	BY T. Dudley	CHECKED E. Nevarez	SPECIFICATIONS BY T. Dudley	PLANS AND SPECS COMPARED

PREPARED FOR THE STATE OF CALIFORNIA DEPARTMENT OF TRANSPORTATION

Stephen Mislinski
PROJECT ENGINEER

BRIDGE NO. 36E-0029
POST MILES 10.54

RETAINING WALLS
RW NO. 10 GENERAL PLAN NO. 2

DESIGN GENERAL PLAN SHEET (ENGLISH) (REV.2/25/05)

ORIGINAL SCALE IN INCHES FOR REDUCED PLANS 0 1 2 3

CU 05
EA OL7014

DISREGARD PRINTS BEARING EARLIER REVISION DATES

REVISION DATES (PRELIMINARY STAGE ONLY): 9/30/08 12/01/08 02/04/09 03/16/09 03/26/09 04/23/09 03/25/11 05/25/11 08/04/11

SHEET 29 OF 64

FILE => TBDRW10-a-gp02.dgn

USERNAME => s124496 DATE PLOTTED => 01-OCT-2012 TIME PLOTTED => 07:27

DIST	COUNTY	ROUTE	POST MILES TOTAL PROJECT	SHEET No	TOTAL SHEETS
05	SCr	17	6.0/12.6	227	284

REGISTERED CIVIL ENGINEER 8/4/11 DATE

9-24-12
PLANS APPROVAL DATE

REGISTERED PROFESSIONAL ENGINEER T. Dudley No. C039514 Exp. 12/31/11 CIVIL STATE OF CALIFORNIA

The State of California or its officers or agents shall not be responsible for the accuracy or completeness of electronic copies of this plan sheet.

AECOM TECHNICAL SERVICES, INC.
2020 L STREET, SUITE 300
SACRAMENTO, CALIFORNIA 95811

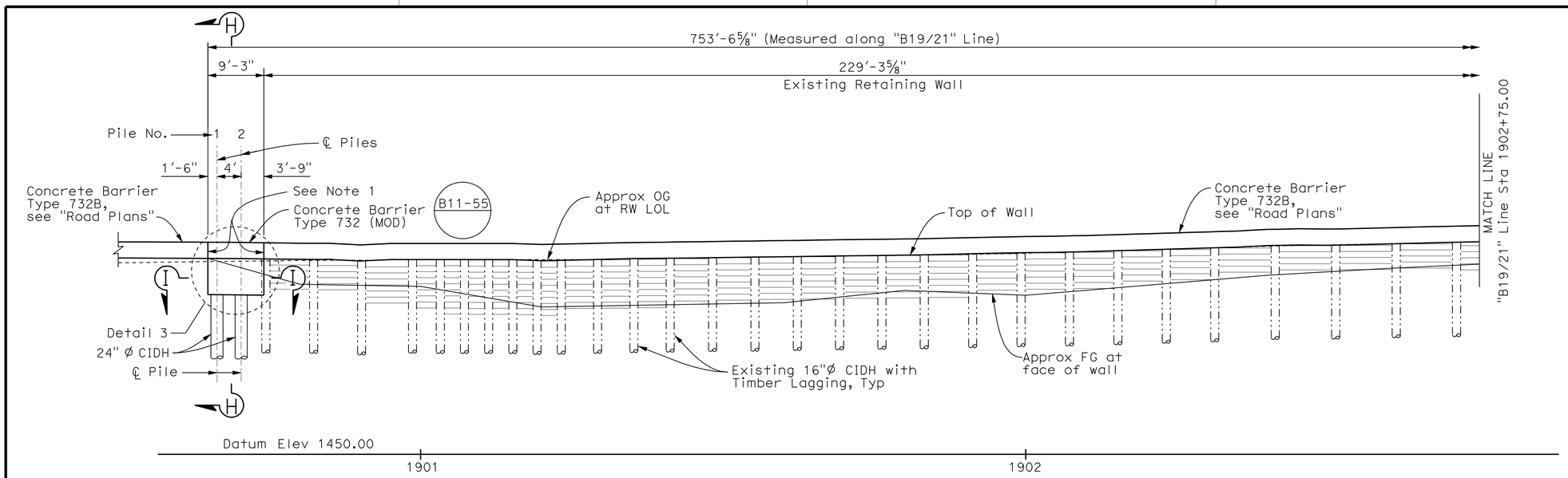

DEVELOPED ELEVATION

1" = 10'-0"

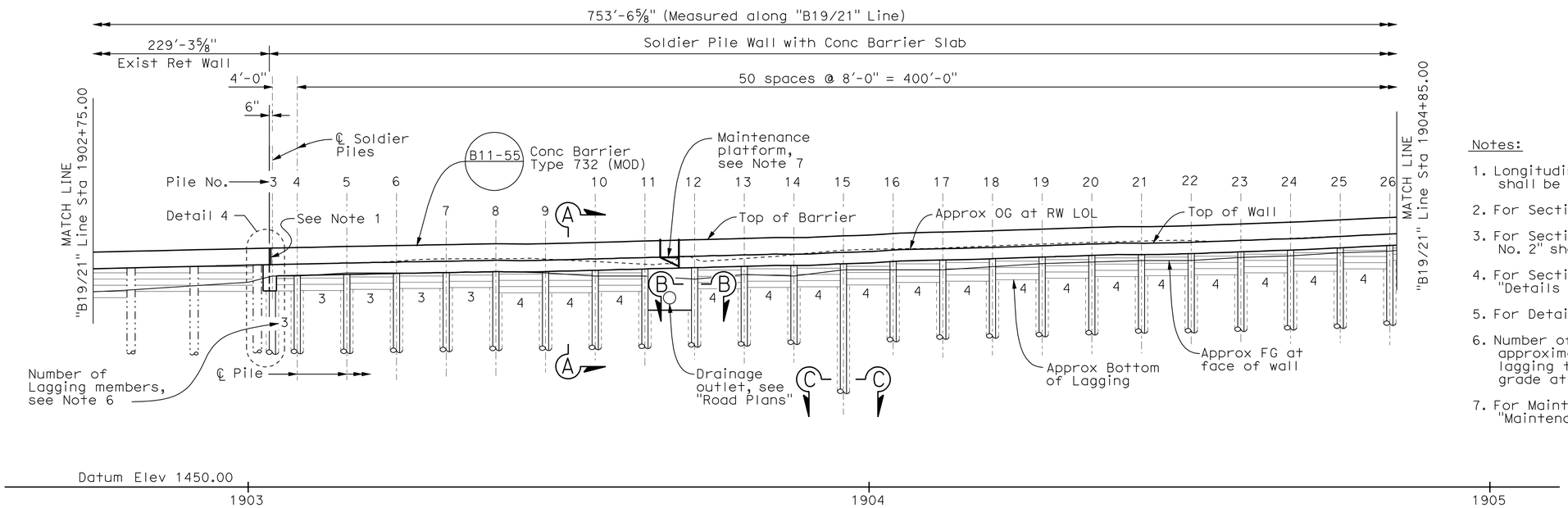

DEVELOPED ELEVATION

1" = 10'-0"

Notes:

1. Longitudinal reinforcement for barrier shall be continuous through joint.
2. For Section A-A, see "Details No. 1" sheet.
3. For Section B-B and Section C-C, see "Details No. 2" sheet.
4. For Section H-H, Section I-I and Detail 3, see "Details No. 4" sheet.
5. For Detail 4, see "Details No. 5" sheet.
6. Number of lagging members shown are approximate only. Contractor shall install lagging to a depth of 2 feet below the finished grade at the face of the Soldier Pile Wall.
7. For Maintenance Platform Details, see "Maintenance Platform Details No. 1" sheet.

Note:
The Contractor shall verify all controlling field dimensions before ordering or fabricating any material.

DESIGN OVERSIGHT Wei An
SIGN OFF DATE

	BY	CHECKED
DESIGN	T. Dudley	R. Price
DETAILS	S. Desalegn	R. Price
QUANTITIES	T. Dudley	E. Nevarez

PREPARED FOR THE STATE OF CALIFORNIA DEPARTMENT OF TRANSPORTATION

Stephen J. Mislinski
PROJECT ENGINEER

BRIDGE NO. 36E-0029
POST MILE 10.54

RETAINING WALLS
RW NO. 10 STRUCTURE PLAN NO. 1

DESIGN DETAIL SHEET (ENGLISH) (REV. 2/25/05)

ORIGINAL SCALE IN INCHES FOR REDUCED PLANS 0 1 2 3

CU 05
EA 0L7014

DISREGARD PRINTS BEARING EARLIER REVISION DATES

REVISION DATES (PRELIMINARY STAGE ONLY) 9/30/08 12/09/08 02/04/09 03/10/09 03/16/09 04/23/09 03/25/11 05/25/11 08/04/11

SHEET 30 OF 64

FILE => TBDRW10-c-sp01.dgn

USERNAME => s124496 DATE PLOTTED => 01-OCT-2012 TIME PLOTTED => 07:27

DIST	COUNTY	ROUTE	POST MILES TOTAL PROJECT	SHEET No	TOTAL SHEETS
05	SCr	17	6.0/12.6	228	284

REGISTERED CIVIL ENGINEER — DATE 8/4/11

9-24-12
PLANS APPROVAL DATE

REGISTERED PROFESSIONAL ENGINEER — T. Dudley — No. C039514 — Exp. 12/31/11 — CIVIL — STATE OF CALIFORNIA

The State of California or its officers or agents shall not be responsible for the accuracy or completeness of electronic copies of this plan sheet.

AECOM TECHNICAL SERVICES, INC.
2020 L STREET, SUITE 300
SACRAMENTO, CALIFORNIA 95811

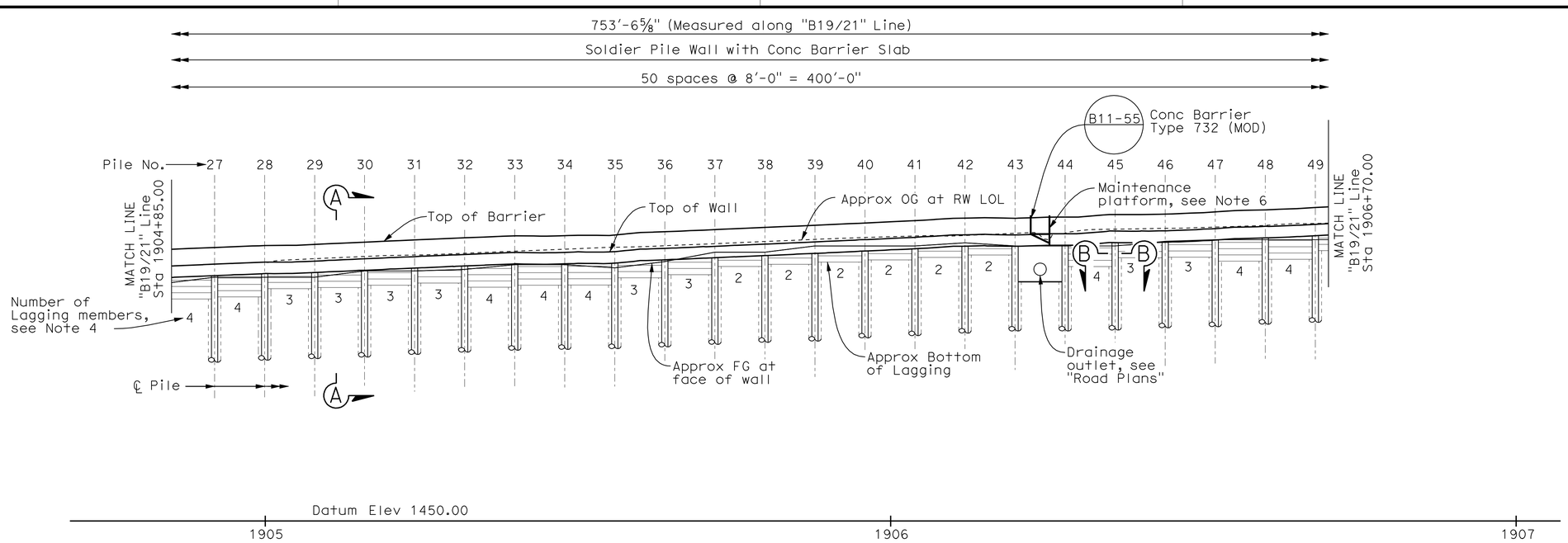

DEVELOPED ELEVATION

1" = 10'

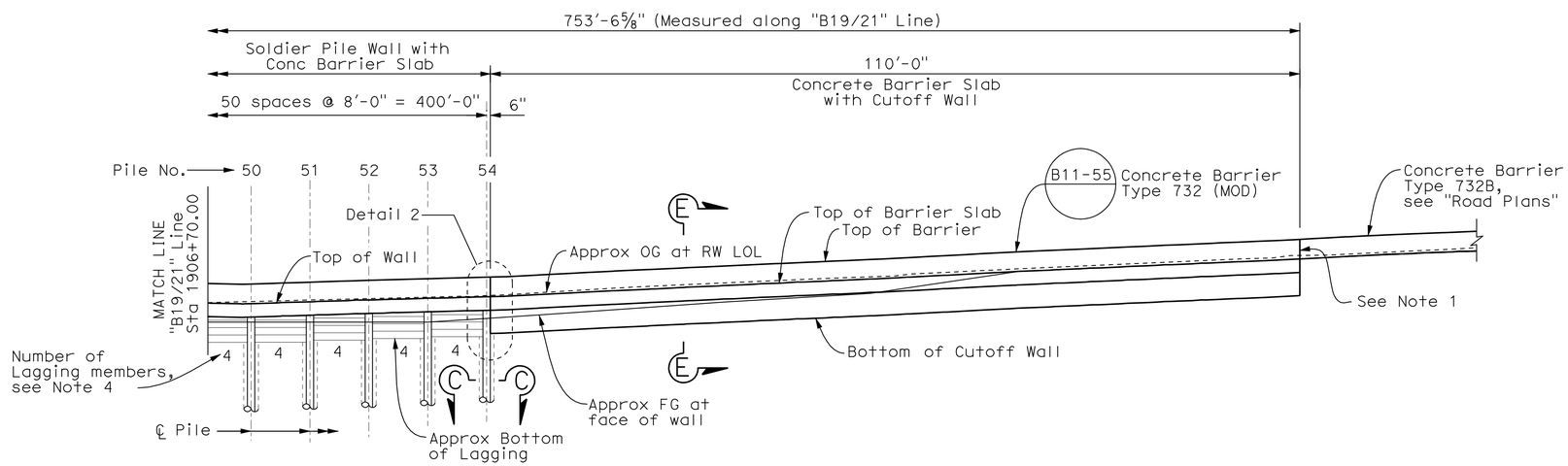

DEVELOPED ELEVATION

1" = 10'

Note:
The Contractor shall verify all controlling field dimensions before ordering or fabricating any material.

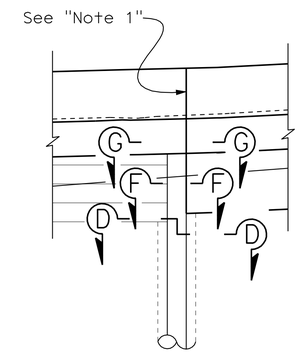

DETAIL 2

¼" = 1'-0"

Notes:

1. Longitudinal reinforcement for barrier shall be continuous through joint.
2. For Section A-A, see "Details No. 1" sheet.
3. For Section B-B, Section C-C and Section D-D, see "Details No. 2" sheet.
4. For Section E-E, Section F-F and Section G-G, see "Details No. 3" sheet.
5. Number of lagging members shown are approximate only. Contractor shall install lagging to a depth of 2 feet below the finished grade at the face of the Soldier Pile Wall.
6. For Maintenance Platform Details, see "Maintenance Platform Details No. 1" sheet.

DESIGN OVERSIGHT — Wei An
SIGN OFF DATE

	BY	CHECKED
DESIGN	T. Dudley	R. Price
DETAILS	S. Desalegn	R. Price
QUANTITIES	T. Dudley	E. Nevarez

PREPARED FOR THE STATE OF CALIFORNIA DEPARTMENT OF TRANSPORTATION

Stephen J. Mislinski
PROJECT ENGINEER

BRIDGE NO. 36E-0029
POST MILE 10.54

RETAINING WALLS
RW NO. 10 STRUCTURE PLAN NO. 2

DESIGN DETAIL SHEET (ENGLISH) (REV. 2/25/05)

ORIGINAL SCALE IN INCHES FOR REDUCED PLANS 0 1 2 3

CU 05
EA 0L7014

DISREGARD PRINTS BEARING EARLIER REVISION DATES
REVISION DATES (PRELIMINARY STAGE ONLY): 9/30/08 12/09/08 02/04/09 03/10/09 03/16/09 04/23/09 03/25/11 05/25/11 08/04/11

SHEET 31 OF 64

FILE => TBDRW10-c-sp02.dgn

USERNAME => s124496 DATE PLOTTED => 01-OCT-2012 TIME PLOTTED => 07:27

DIST	COUNTY	ROUTE	POST MILES TOTAL PROJECT	SHEET No	TOTAL SHEETS
05	SCr	17	6.0/12.6	229	284

REGISTERED CIVIL ENGINEER — DATE 8/4/11

9-24-12
PLANS APPROVAL DATE

REGISTERED PROFESSIONAL ENGINEER — T. Dudley — No. C039514 — Exp. 12/31/11 — CIVIL — STATE OF CALIFORNIA

The State of California or its officers or agents shall not be responsible for the accuracy or completeness of electronic copies of this plan sheet.

AECOM TECHNICAL SERVICES, INC.
2020 L STREET, SUITE 300
SACRAMENTO, CALIFORNIA 95811

CURVE DATA TABLE

	R	Δ	T	L
A	300.00	2°51′45″	7.50	14.99
B	571.00	18°19′39″	92.11	182.65
C	496.00	28°34′54″	126.34	247.43
D	496.00	30°14′39″	134.04	261.82

LEGEND:

1474.78 Indicates bottom of Conc Ret Wall elevation

BENCH MARK

PRHV PM10.55
0.43′ Rt of "B19/21" Line
Sta 1900+17.07
N= 1869081.292,
E= 6131583.927,
ELEV= 1481.119,

PRHV PM10.80
5.87′ Rt of "B19/21" Line
Sta 1909+02.70
N= 1869884.013,
E= 6131452.829,
ELEV 1505.643

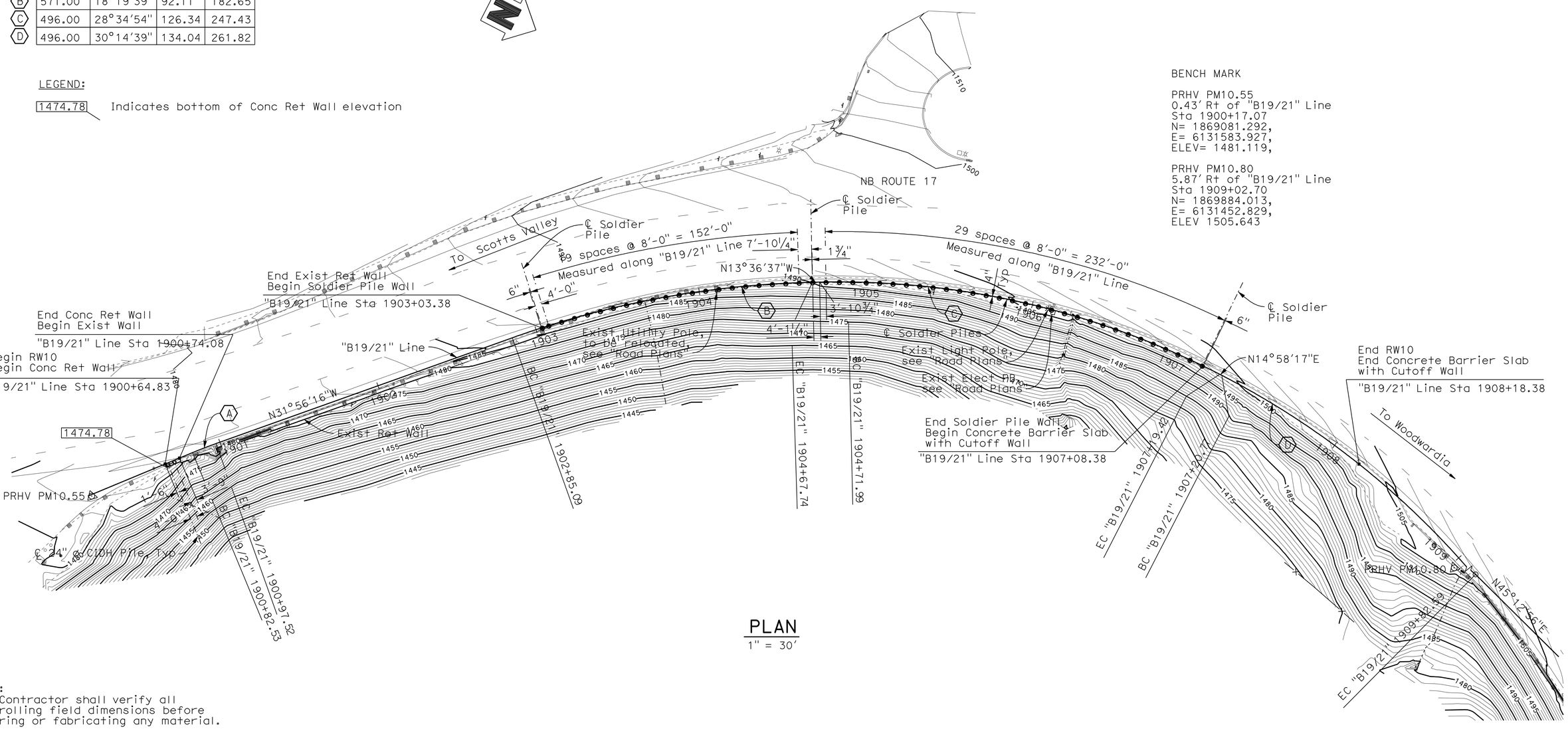

PLAN
1″ = 30′

Note:
The Contractor shall verify all controlling field dimensions before ordering or fabricating any material.

GEOTECHNICAL PROFESSIONAL APPROVAL DATE

DESIGN OVERSIGHT Wei An	SCALE: As Shown	VERT.DATUM NAVD 1988	HORZ.DATUM NAD 1983	DESIGN	BY T. Dudley	CHECKED R. Price	
	PHOTOGRAMMETRY AS OF: X	ALIGNMENT TIES Dist. Traverse Sheet		DETAILS	BY S. Desalegn	CHECKED R. Price	
	SURVEYED BY X	DRAFTED BY X		QUANTITIES	BY T. Dudley	CHECKED E. Nevarez	
SIGN OFF DATE	FIELD CHECKED BY X	CHECKED BY X					

PREPARED FOR THE STATE OF CALIFORNIA DEPARTMENT OF TRANSPORTATION

Stephen J. Mislinski
PROJECT ENGINEER

BRIDGE NO. 36E-0029
POST MILE 10.54

RETAINING WALLS
RW NO. 10 FOUNDATION PLAN NO. 1

DESIGN DETAIL SHEET (ENGLISH) (REV. 2/25/05)

ORIGINAL SCALE IN INCHES FOR REDUCED PLANS 0 1 2 3

CU 05
EA 0L7014

DISREGARD PRINTS BEARING EARLIER REVISION DATES

REVISION DATES (PRELIMINARY STAGE ONLY): 9/30/08 12/01/08 02/04/09 03/16/09 03/16/09 04/23/09 03/25/11 05/25/11 08/04/11

SHEET 32 OF 64

FILE => TBDRW10-e-fdp101.dgn

USERNAME => s124496 DATE PLOTTED => 01-OCT-2012 TIME PLOTTED => 07:28

DIST	COUNTY	ROUTE	POST MILES TOTAL PROJECT	SHEET No	TOTAL SHEETS
05	SCr	17	6.0/12.6	230	284

REGISTERED CIVIL ENGINEER 8/4/11 DATE

9-24-12
PLANS APPROVAL DATE

REGISTERED PROFESSIONAL ENGINEER T. Dudley No. C039514 Exp. 12/31/11 CIVIL STATE OF CALIFORNIA

The State of California or its officers or agents shall not be responsible for the accuracy or completeness of electronic copies of this plan sheet.

AECOM TECHNICAL SERVICES, INC.
2020 L STREET, SUITE 300
SACRAMENTO, CALIFORNIA 95811

PILE DATA TABLE

Station along "B19/21" Line	Pile No.	Top of Pile Elev	Concrete Cut-off Elev	Bottom of Drilled Hole Elev	Pile Section	Finished Grade Bench Elev
(ft)		(ft)	(ft)	(ft)		(ft)
1900+66.33	1	1475.03	-	1457.03	24"Ø CIDH	1479.21
1900+70.33	2	1475.03	-	1457.03	24"Ø CIDH	1477.95
1903+03.88	3	1484.65	1480.82	1463.40	W12x65	1483.32
1903+07.88	4	1484.72	1480.82	1463.47	W12x65	1483.46
1903+15.88	5	1484.85	1480.96	1463.60	W12x65	1483.67
1903+23.88	6	1484.99	1481.17	1463.74	W12x65	1483.78
1903+31.88	7	1485.13	1481.07	1463.88	W12x65	1483.67
1903+39.88	8	1485.28	1480.90	1464.03	W12x65	1483.57
1903+47.88	9	1485.41	1480.68	1464.16	W12x65	1483.40
1903+55.88	10	1485.55	1480.68	1464.30	W12x65	1483.18
1903+63.88	11	1485.72	1480.68	1464.47	W12x65	1483.34
1903+71.88	12	1485.93	1480.84	1464.68	W12x65	1483.52
1903+79.88	13	1486.14	1481.02	1464.89	W12x65	1484.00
1903+87.88	14	1486.34	1481.48	1465.09	W12x65	1483.98
1903+95.88	15	1486.55	1481.48	1465.30	W12x65	1484.20
1904+03.88	16	1486.80	1481.70	1465.55	W12x65	1484.46
1904+11.88	17	1487.08	1481.96	1465.83	W12x65	1484.76
1904+19.88	18	1487.36	1482.26	1466.11	W12x65	1485.14
1904+27.88	19	1487.63	1482.64	1466.38	W12x65	1485.60
1904+35.88	20	1487.90	1483.10	1466.65	W12x65	1485.82
1904+43.88	21	1488.13	1483.32	1466.88	W12x65	1485.98
1904+51.88	22	1488.31	1483.48	1467.06	W12x65	1486.35
1904+59.88	23	1488.49	1483.85	1467.24	W12x65	1486.87
1904+67.88	24	1488.82	1484.37	1467.57	W12x65	1487.35
1904+75.88	25	1489.16	1484.85	1467.91	W12x65	1487.63
1904+83.88	26	1489.50	1485.13	1468.25	W12x65	1488.00
1904+91.88	27	1489.83	1485.50	1468.58	W12x65	1488.39
1904+99.88	28	1490.16	1485.89	1468.91	W12x65	1488.75
1905+07.88	29	1490.45	1486.25	1469.20	W12x65	1489.10
1905+15.88	30	1490.74	1486.60	1469.49	W12x65	1489.37
1905+23.88	31	1491.05	1486.87	1469.80	W12x65	1489.73
1905+31.88	32	1491.38	1487.23	1470.13	W12x65	1489.90
1905+39.88	33	1491.71	1487.40	1470.46	W12x65	1490.03
1905+47.88	34	1491.91	1487.53	1470.66	W12x65	1490.37
1905+55.88	35	1492.12	1487.87	1470.87	W12x65	1491.07
1905+63.88	36	1492.39	1488.57	1471.14	W12x65	1491.80
1905+71.88	37	1492.71	1489.30	1471.46	W12x65	1492.54
1905+79.88	38	1493.03	1490.04	1471.78	W12x65	1493.21
1905+87.88	39	1493.40	1490.71	1472.15	W12x65	1493.66
1905+95.88	40	1493.77	1491.16	1472.52	W12x65	1493.97
1906+03.88	41	1494.07	1491.47	1472.82	W12x65	1494.05
1906+11.88	42	1494.29	1491.55	1473.04	W12x65	1494.08
1906+19.88	43	1494.51	1490.73	1473.26	W12x65	1494.07
1906+27.88	44	1494.75	1490.73	1473.50	W12x65	1493.23
1906+35.88	45	1494.99	1490.73	1473.74	W12x65	1493.63
1906+43.88	46	1495.27	1491.13	1474.02	W12x65	1493.87
1906+51.88	47	1495.57	1491.37	1474.32	W12x65	1493.93
1906+59.88	48	1495.87	1491.43	1474.62	W12x65	1494.05
1906+67.88	49	1496.08	1491.55	1474.83	W12x65	1494.30
1906+75.88	50	1496.29	1491.80	1475.04	W12x65	1494.51
1906+83.88	51	1496.52	1492.01	1475.27	W12x65	1494.66
1906+91.88	52	1496.76	1492.16	1475.51	W12x65	1494.82
1906+99.88	53	1497.00	1492.32	1475.75	W12x65	1495.12
1907+07.88	54	1497.29	1492.62	1476.04	W12x65	1495.57

Note:
The Contractor shall verify all controlling field dimensions before ordering or fabricating any material.

GEOTECHNICAL PROFESSIONAL APPROVAL DATE

DESIGN OVERSIGHT Wei An
SIGN OFF DATE

SCALE: As Shown | VERT.DATUM NAVD 1988 | HORZ.DATUM NAD 1983
PHOTOGRAMMETRY AS OF: X | ALIGNMENT TIES Dist. Traverse Sheet
SURVEYED BY X | DRAFTED BY X
FIELD CHECKED BY X | CHECKED BY X

	BY	CHECKED
DESIGN	T. Dudley	R. Price
DETAILS	S. Desalegn	R. Price
QUANTITIES	T. Dudley	E. Nevarez

PREPARED FOR THE STATE OF CALIFORNIA DEPARTMENT OF TRANSPORTATION

Stephen J. Mislinski
PROJECT ENGINEER

BRIDGE NO. 36E-0029
POST MILE 10.54

RETAINING WALLS
RW NO. 10 FOUNDATION PLAN NO. 2

DESIGN DETAIL SHEET (ENGLISH) (REV. 2/25/05)

ORIGINAL SCALE IN INCHES FOR REDUCED PLANS 0 1 2 3

CU 05
EA 0L7014

DISREGARD PRINTS BEARING EARLIER REVISION DATES

REVISION DATES (PRELIMINARY STAGE ONLY) 9/30/08 12/01/08 02/04/09 03/10/09 03/16/09 04/23/09 03/25/11 05/25/11 08/04/11

SHEET 33 OF 64

FILE => TBDRW10-e-fdp102.dgn

USERNAME => s124936 DATE PLOTTED => 01-OCT-2012 TIME PLOTTED => 07:28

DIST	COUNTY	ROUTE	POST MILES TOTAL PROJECT	SHEET No	TOTAL SHEETS
05	SCr	17	6.0/12.6	231	284

REGISTERED CIVIL ENGINEER 8/4/11 DATE

9-24-12
PLANS APPROVAL DATE

REGISTERED PROFESSIONAL ENGINEER T. Dudley No. C039514 Exp. 12/31/11 CIVIL STATE OF CALIFORNIA

The State of California or its officers or agents shall not be responsible for the accuracy or completeness of electronic copies of this plan sheet.

AECOM TECHNICAL SERVICES, INC.
2020 L STREET, SUITE 300
SACRAMENTO, CALIFORNIA 95811

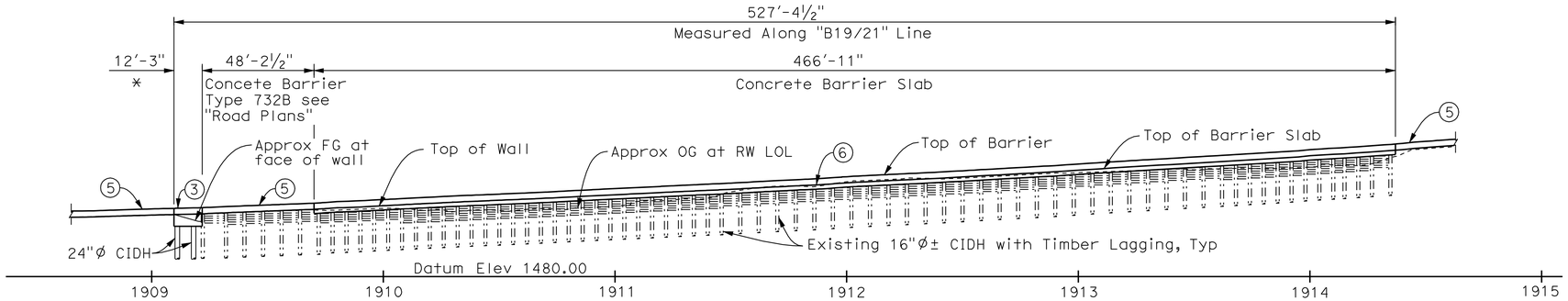

* - Concrete Retaining Wall

ELEVATION

1" = 30'

QUANTITIES

REMOVE RETAINING WALL (PORTION), LOCATION A	LUMP SUM	
STRUCTURE EXCAVATION (RETAINING WALL)	8	CY
STRUCTURE EXCAVATION (TYPE Z-2) (AERIALLY DEPOSITED LEAD)	113	CY
STRUCTURE BACKFILL (RETAINING WALL)	3	CY
24" CAST-IN-DRILLED-HOLE CONCRETE PILING (RETAINING WALL)	30	LF
STRUCTURAL CONCRETE, RETAINING WALL	5	CY
STRUCTURAL CONCRETE, BARRIER SLAB	186	CY
BAR REINFORCING STEEL (RETAINING WALL)	1,892	LB
CONCRETE BARRIER (TYPE 732 MODIFIED)	479	LF

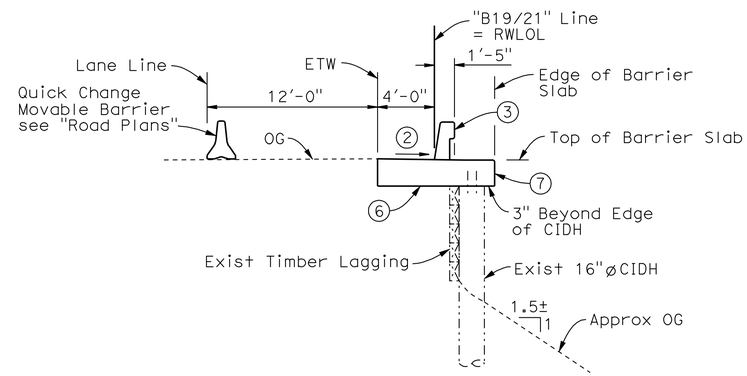

CONCRETE BARRIER SLAB

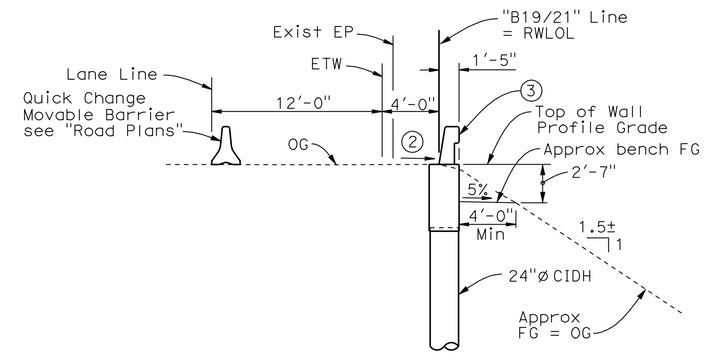

CONCRETE RETAINING WALL

TYPICAL SECTION

3/16" = 1'-0"

CURVE DATA TABLE

	R	Δ	T	L
A	496.00	30°14'39"	134.04	261.82
B	596.00	22°07'55"	116.56	230.22

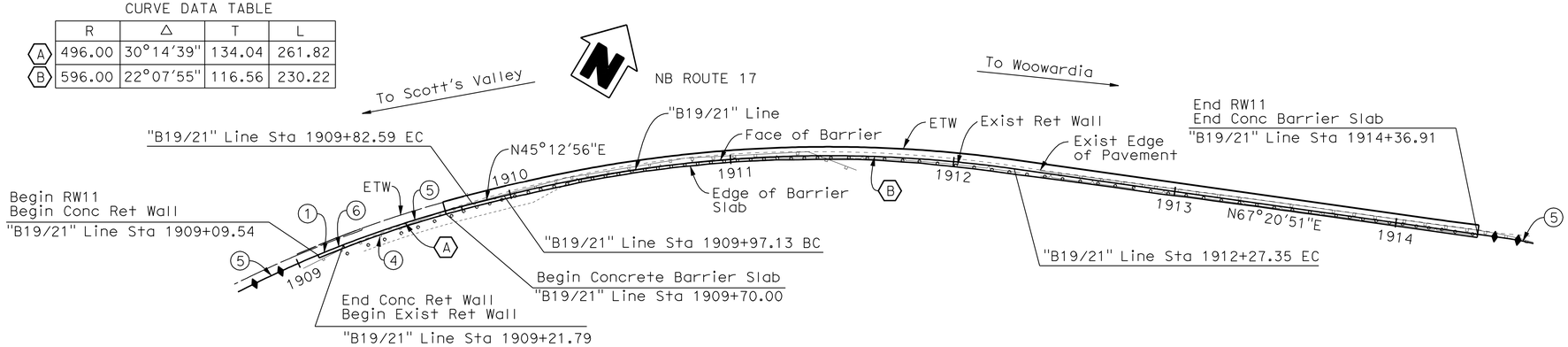

PLAN

1" = 30'

LEGEND:

1. Paint "Br No. 36E-0030"
2. Match existing cross slope
3. Concrete Barrier Type 732 (MOD)
4. Exist MBGR to be removed, see "Road Plans"
5. Concrete Barrier Type 732B, see "Road Plans"
6. Concrete Barrier Slab
7. Remove Portion of Existing CIDH Soldier Pile RW, Location "A"

Note:
The Contractor shall verify all controlling field dimensions before ordering or fabricating any material.

DESIGN OVERSIGHT Wei An
8-10-11
SIGN OFF DATE

	BY	CHECKED		
DESIGN	T. Dudley	R. Price	LOAD & RESISTANCE FACTOR DESIGN	LIVE LOADING: HS20-44 AND ALTERNATIVE AND PERMIT DESIGN LOAD
DETAILS	S. Desalegn	R. Price	LAYOUT	S. Desalegn / T. Dudley
QUANTITIES	T. Dudley	E. Nevarez	SPECIFICATIONS	T. Dudley / PLANS AND SPECS COMPARED

PREPARED FOR THE STATE OF CALIFORNIA DEPARTMENT OF TRANSPORTATION

Stephen Mislinski
PROJECT ENGINEER

BRIDGE NO. 36E-0030
POST MILES 10.62

RETAINING WALLS
RW NO. 11 GENERAL PLAN

DESIGN GENERAL PLAN SHEET (ENGLISH) (REV.2/25/05)

ORIGINAL SCALE IN INCHES FOR REDUCED PLANS 0 1 2 3

CU 05
EA OL7014

DISREGARD PRINTS BEARING EARLIER REVISION DATES

REVISION DATES (PRELIMINARY STAGE ONLY) 9/30/08 12/09/08 02/04/09 03/10/09 03/16/09 04/23/09 03/28/11 05/25/11 08/04/11 8-9-11

SHEET 34 OF 64

FILE => TBDRW11-a-gp01.dgn

USERNAME => s124496 DATE PLOTTED => 01-OCT-2012 TIME PLOTTED => 07:45

DIST	COUNTY	ROUTE	POST MILES TOTAL PROJECT	SHEET No	TOTAL SHEETS
05	SCr	17	6.0/12.6	232	284

REGISTERED CIVIL ENGINEER 8/4/11 DATE

9-24-12
PLANS APPROVAL DATE

The State of California or its officers or agents shall not be responsible for the accuracy or completeness of electronic copies of this plan sheet.

REGISTERED PROFESSIONAL ENGINEER T. Dudley No. C039514 Exp. 12/31/11 CIVIL STATE OF CALIFORNIA

AECOM TECHNICAL SERVICES, INC.
2020 L STREET, SUITE 300
SACRAMENTO, CALIFORNIA 95811

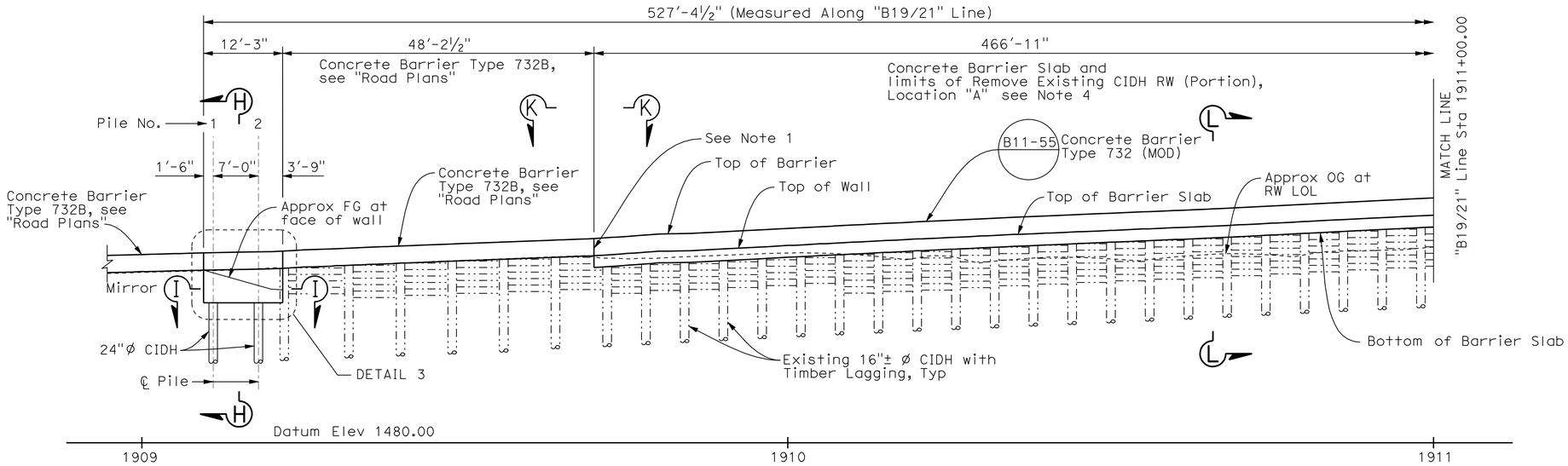

DEVELOPED ELEVATION

1" = 10'-0"

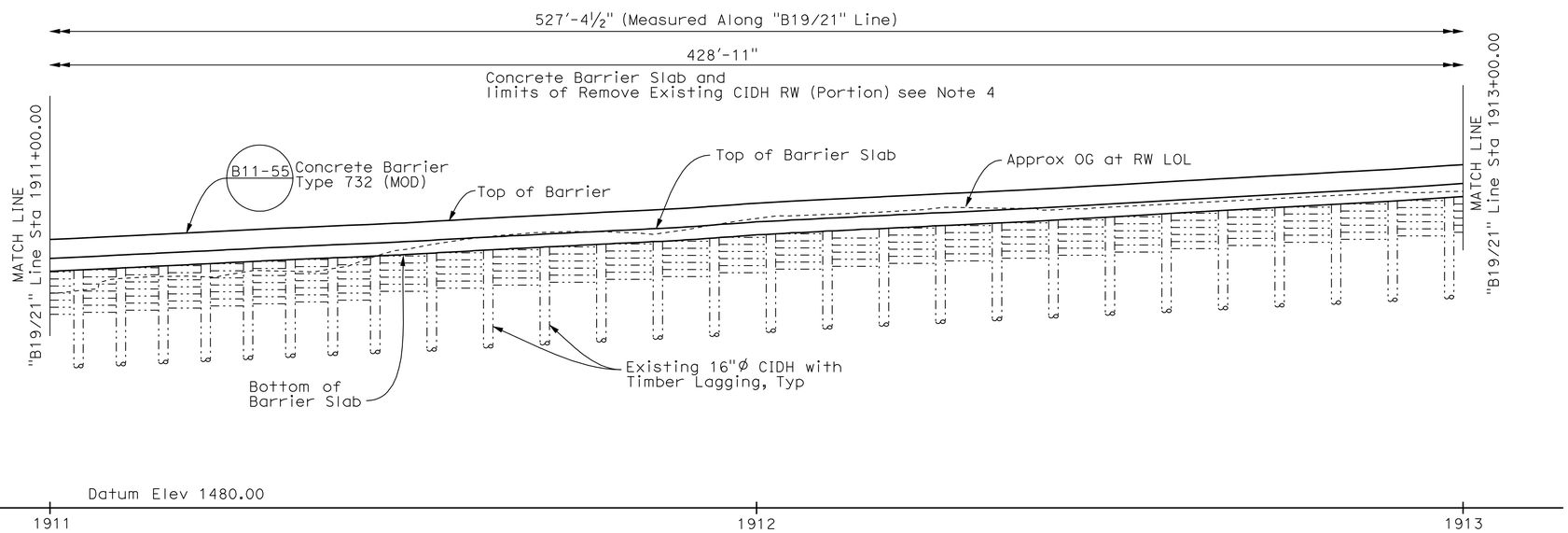

DEVELOPED ELEVATION

1" = 10'-0"

Notes:

1. Longitudinal reinforcement for barrier shall be continuous through joint.
2. For Detail 3, Section H-H and Section I-I, see "Details No. 4" sheet.
3. For View K-K and Section L-L, see "Details No. 6 " sheet.
4. For Removal of Existing CIDH RW (Portion) see "Details No. 6" sheet.

Note:
The Contractor shall verify all controlling field dimensions before ordering or fabricating any material.

DESIGN OVERSIGHT Wei An
SIGN OFF DATE

	BY	CHECKED
DESIGN	T. Dudley	R. Price
DETAILS	S. Desalegn	R. Price
QUANTITIES	T. Dudley	E. Nevarez

PREPARED FOR THE STATE OF CALIFORNIA DEPARTMENT OF TRANSPORTATION

Stephen J. Mislinski
PROJECT ENGINEER

BRIDGE NO. 36E-0030
POST MILE 10.62

RETAINING WALLS

RW NO. 11 STRUCTURE PLAN NO. 1

DESIGN DETAIL SHEET (ENGLISH) (REV. 2/25/05)

ORIGINAL SCALE IN INCHES FOR REDUCED PLANS 0 1 2 3

CU 05
EA 0L7014

DISREGARD PRINTS BEARING EARLIER REVISION DATES

REVISION DATES (PRELIMINARY STAGE ONLY): 9/30/08 12/09/08 02/04/09 03/16/09 03/16/09 04/23/09 03/28/11 05/28/11 08/04/11

SHEET 35 OF 64

FILE => TBDRW11-c-sp01.dgn

USERNAME => s124496 DATE PLOTTED => 01-OCT-2012 TIME PLOTTED => 07:45

DIST	COUNTY	ROUTE	POST MILES TOTAL PROJECT	SHEET No	TOTAL SHEETS
05	SCr	17	6.0/12.6	233	284

REGISTERED CIVIL ENGINEER — DATE 8/4/11

9-24-12
PLANS APPROVAL DATE

REGISTERED PROFESSIONAL ENGINEER — T. Dudley — No. C039514 — Exp. 12/31/11 — CIVIL — STATE OF CALIFORNIA

The State of California or its officers or agents shall not be responsible for the accuracy or completeness of electronic copies of this plan sheet.

AECOM TECHNICAL SERVICES, INC.
2020 L STREET, SUITE 300
SACRAMENTO, CALIFORNIA 95811

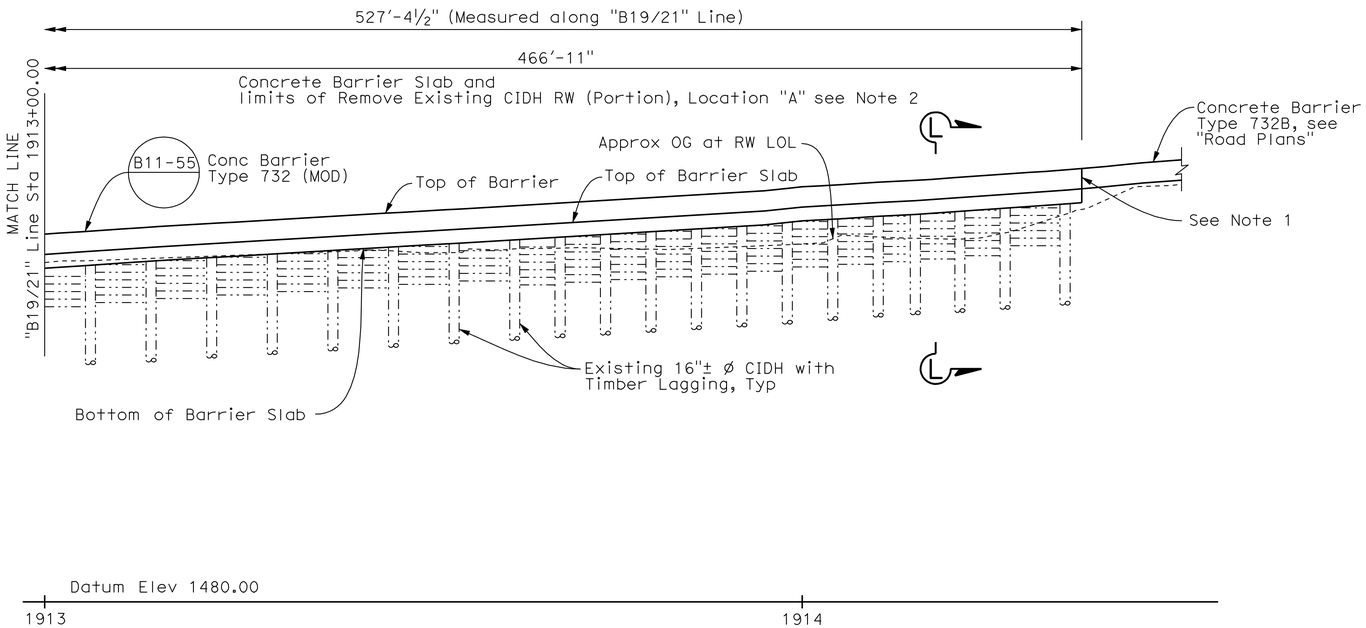

DEVELOPED ELEVATION

1" = 10'-0"

Notes:

1. Longitudinal reinforcement for barrier shall be continuous between different section types.
2. For Removal of Existing CIDH RW (Portion), Location "A" see "Details No. 6" sheet.
3. For Section L-L, see "Details No. 6" sheet.

Note:
The Contractor shall verify all controlling field dimensions before ordering or fabricating any material.

DESIGN OVERSIGHT — Wei An
SIGN OFF DATE

	BY	CHECKED
DESIGN	T. Dudley	R. Price
DETAILS	S. Desalegn	R. Price
QUANTITIES	T. Dudley	E. Nevarez

PREPARED FOR THE STATE OF CALIFORNIA DEPARTMENT OF TRANSPORTATION

Stephen J. Mislinski
PROJECT ENGINEER

BRIDGE NO. 36E-0030
POST MILE 10.62

RETAINING WALLS
RW NO. 11 STRUCTURE PLAN NO. 2

DESIGN DETAIL SHEET (ENGLISH) (REV. 2/25/05)

ORIGINAL SCALE IN INCHES FOR REDUCED PLANS 0 1 2 3

CU 05
EA 0L7014

DISREGARD PRINTS BEARING EARLIER REVISION DATES

REVISION DATES (PRELIMINARY STAGE ONLY): 9/30/08 12/09/08 02/04/09 03/10/09 03/16/09 04/23/09 03/25/11 05/25/11 08/04/11

SHEET 36 OF 64

FILE => TBDRW11-c-sp02.dgn

USERNAME => s124496 DATE PLOTTED => 01-OCT-2012 TIME PLOTTED => 07:45

DIST	COUNTY	ROUTE	POST MILES TOTAL PROJECT	SHEET No	TOTAL SHEETS
05	SCr	17	6.0/12.6	234	284

REGISTERED CIVIL ENGINEER — DATE 8/4/11

9-24-12
PLANS APPROVAL DATE

REGISTERED PROFESSIONAL ENGINEER — T. Dudley — No. C039514 — Exp. 12/31/11 — CIVIL — STATE OF CALIFORNIA

The State of California or its officers or agents shall not be responsible for the accuracy or completeness of electronic copies of this plan sheet.

AECOM TECHNICAL SERVICES, INC.
2020 L STREET, SUITE 300
SACRAMENTO, CALIFORNIA 95811

BENCH MARK

PRHV PM10.80
5.87' Rt of "B19/21" Line
Sta 1909+02.70
N= 1869884.013,
E= 6131452.829,
ELEV= 1505.643'

PRHV PM10.89
N= 1870264.357,
E= 6132105.436,
ELEV= 1547.448

CURVE DATA TABLE

	R	Δ	T	L
A	496.00	30°14'39"	134.04	261.82
B	596.00	22°07'55"	116.56	230.22

LEGEND:

1502.20 Indicates bottom of Conc Ret Wall elevation

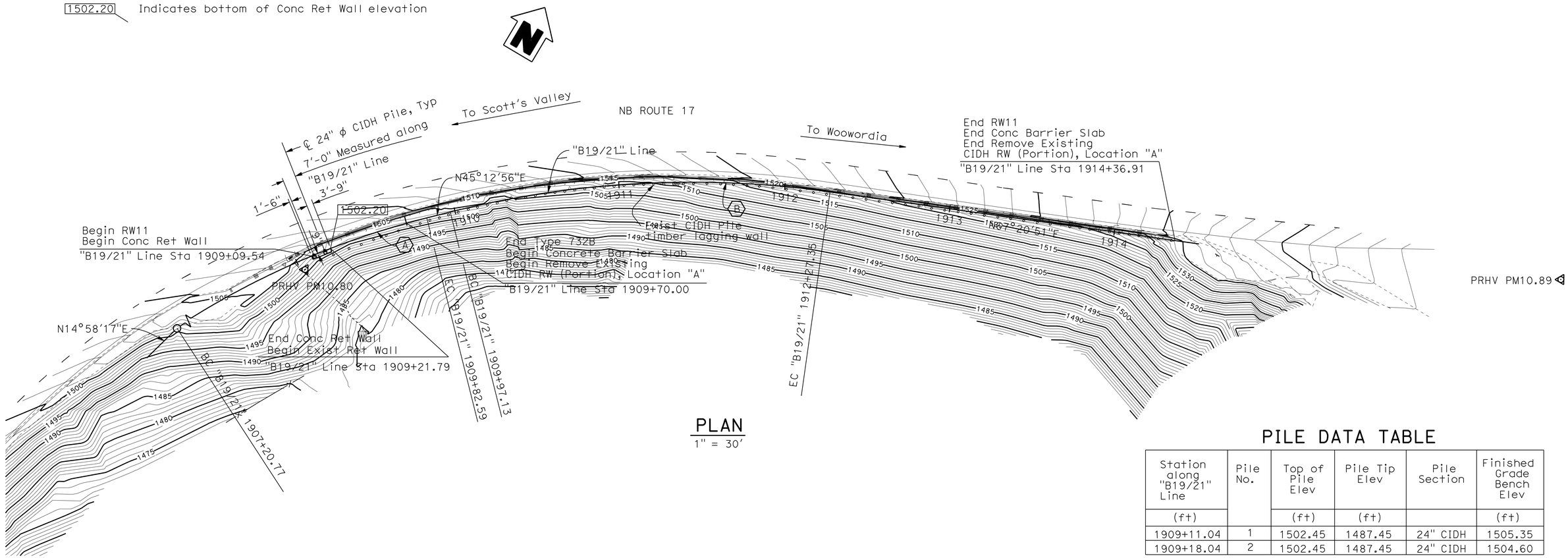

PLAN
1" = 30'

PILE DATA TABLE

Station along "B19/21" Line	Pile No.	Top of Pile Elev	Pile Tip Elev	Pile Section	Finished Grade Bench Elev
(ft)		(ft)	(ft)		(ft)
1909+11.04	1	1502.45	1487.45	24" CIDH	1505.35
1909+18.04	2	1502.45	1487.45	24" CIDH	1504.60

Note:
The Contractor shall verify all controlling field dimensions before ordering or fabricating any material.

GEOTECHNICAL PROFESSIONAL APPROVAL DATE

DESIGN OVERSIGHT Wei An	SCALE: As Shown	VERT.DATUM NAVD 1988	HORZ.DATUM NAD 1983	DESIGN	BY T. Dudley	CHECKED R. Price	PREPARED FOR THE STATE OF CALIFORNIA DEPARTMENT OF TRANSPORTATION
	PHOTOGRAMMETRY AS OF: X	ALIGNMENT TIES Dist. Traverse Sheet		DETAILS	BY S. Desalegn	CHECKED R. Price	
SIGN OFF DATE	SURVEYED BY X	DRAFTED BY X		QUANTITIES	BY T. Dudley	CHECKED E. Nevarez	
	FIELD CHECKED BY X	CHECKED BY X					

Stephen J. Mislinski
PROJECT ENGINEER

BRIDGE NO. 36E-0030
POST MILE 10.62

RETAINING WALLS
RW NO. 11 FOUNDATION PLAN

DESIGN DETAIL SHEET (ENGLISH) (REV. 2/25/05)

ORIGINAL SCALE IN INCHES FOR REDUCED PLANS 0 1 2 3

CU 05
EA 0L7014

DISREGARD PRINTS BEARING EARLIER REVISION DATES

REVISION DATES (PRELIMINARY STAGE ONLY) 9/30/08 12/09/08 02/04/09 03/16/09 03/16/09 04/23/09 03/25/11 05/25/11 08/04/11

SHEET 37 OF 64

FILE => TBDRW11-e-fdp101.dgn

USERNAME => s124436 DATE PLOTTED => 01-OCT-2012 TIME PLOTTED => 07:45

DIST	COUNTY	ROUTE	POST MILES TOTAL PROJECT	SHEET No	TOTAL SHEETS
05	SCr	17	6.0/12.6	235	284

REGISTERED CIVIL ENGINEER — DATE 8/4/11

9-24-12
PLANS APPROVAL DATE

REGISTERED PROFESSIONAL ENGINEER — T. Dudley — No. C039514 — Exp. 12/31/11 — CIVIL — STATE OF CALIFORNIA

The State of California or its officers or agents shall not be responsible for the accuracy or completeness of electronic copies of this plan sheet.

AECOM TECHNICAL SERVICES, INC.
2020 L STREET, SUITE 300
SACRAMENTO, CALIFORNIA 95811

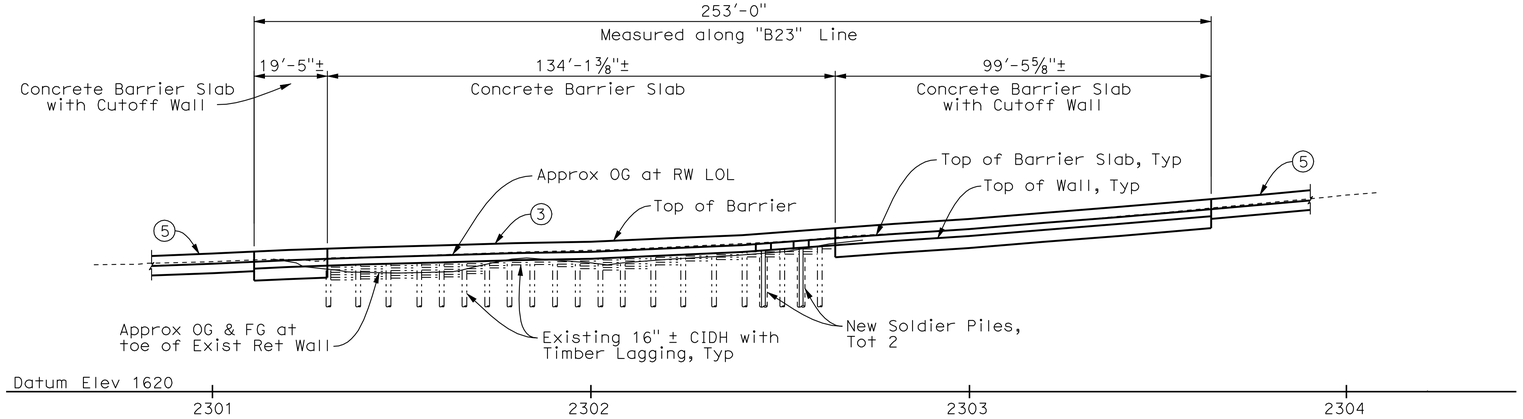

ELEVATION

1" = 20'

QUANTITIES

REMOVE RETAINING WALL (PORTION), LOCATION B	LUMP	SUM
24" DRILLED HOLE	34	LF
STRUCTURE EXCAVATION (TYPE Z-2) (AERIALLY DEPOSITED LEAD)	179	CY
CONCRETE BACKFILL	4	CY
INSTALL STEEL SOLDIER PILING	2	EA
STRUCTURAL CONCRETE, BARRIER SLAB	126	CY
CLEAN AND PAINT STEEL SOLDIER PILING	LUMP	SUM
CONCRETE BARRIER (TYPE 732 MODIFIED)	253	LF

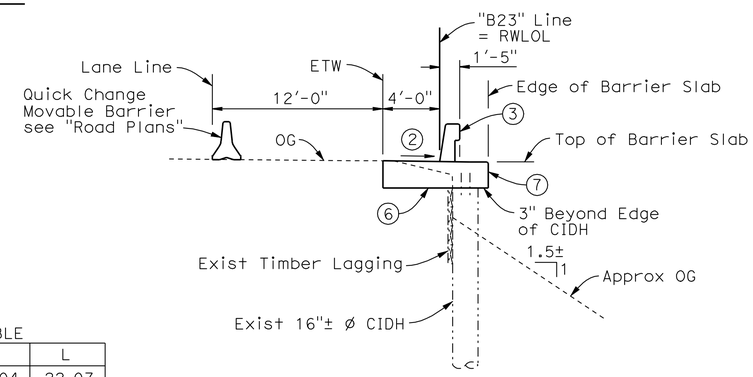

CONCRETE BARRIER SLAB

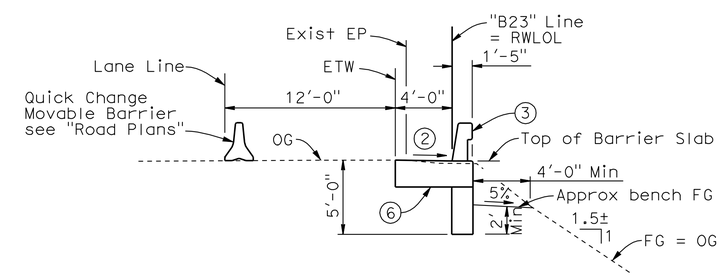

CONCRETE BARRIER SLAB WITH CUTOFF WALL

TYPICAL SECTION

3/16" = 1'-0"

CURVE DATA TABLE

	R	Δ	T	L
A	300.00	4°12'58"	11.04	22.07
B	3496.00	2°20'14"	71.31	142.60
C	846.00	9°28'12"	70.07	139.83

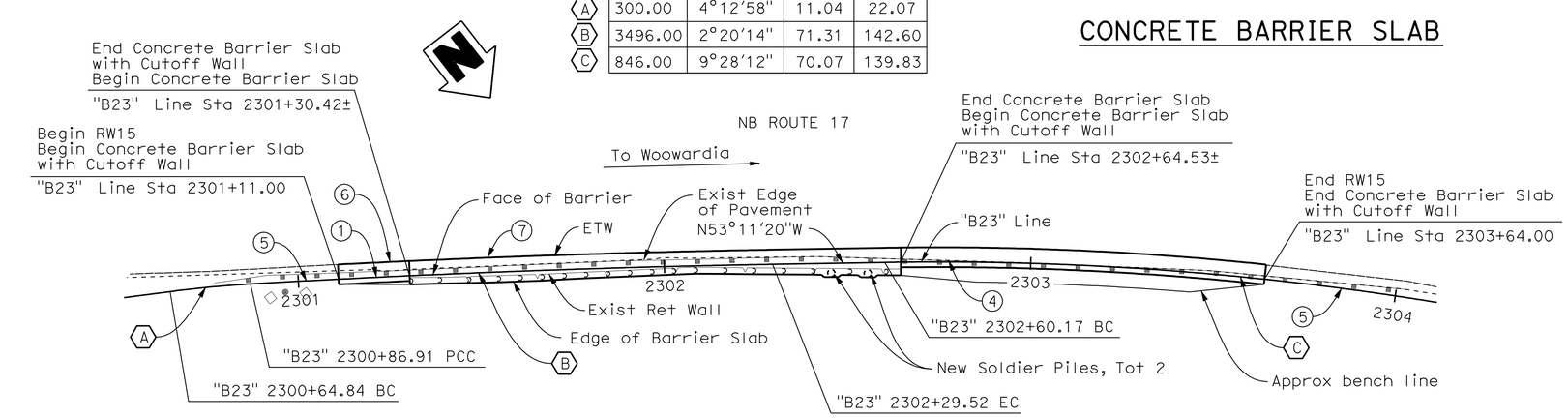

PLAN

1" = 20'

LEGEND:

1. Paint "Br No. 36E-0031"
2. Match existing cross slope
3. Concrete Barrier Type 732 (MOD)
4. Exist MBGR to be removed, see "Road Plans"
5. Concrete Barrier Type 732B, see "Road Plans"
6. Concrete Barrier Slab
7. Remove Portion of Existing CIDH Soldier Pile RW Location "B"

Note:
The Contractor shall verify all controlling field dimensions before ordering or fabricating any material.

DESIGN OVERSIGHT — Wei An
8-10-11
SIGN OFF DATE

	BY	CHECKED		
DESIGN	T. Dudley	R. Price	LOAD & RESISTANCE FACTOR DESIGN	LIVE LOADING: HS20-44 AND ALTERNATIVE AND PERMIT DESIGN LOAD
DETAILS	C. Lee	T. Dudley	LAYOUT: C. Lee	CHECKED: S. Mislinksi
QUANTITIES	M. Stiller	S. Desalegn	SPECIFICATIONS: T. Dudley	PLANS AND SPECS COMPARED

PREPARED FOR THE STATE OF CALIFORNIA DEPARTMENT OF TRANSPORTATION

Stephen Mislinski
PROJECT ENGINEER

BRIDGE NO. 36E-0031
POST MILES 11.26

RETAINING WALLS
RW NO. 15 GENERAL PLAN

DESIGN GENERAL PLAN SHEET (ENGLISH) (REV.2/25/05)

ORIGINAL SCALE IN INCHES FOR REDUCED PLANS 0 1 2 3

CU 05
EA OL7014

DISREGARD PRINTS BEARING EARLIER REVISION DATES

REVISION DATES (PRELIMINARY STAGE ONLY): 12/01/08 02/04/09 03/18/09 03/16/09 03/25/11 05/25/11 08/04/11 8-9-11

SHEET 38 OF 64

FILE => TBDRW15-a-gp01.dgn

USERNAME => s124496 DATE PLOTTED => 01-OCT-2012 TIME PLOTTED => 07:45

DIST	COUNTY	ROUTE	POST MILES TOTAL PROJECT	SHEET No	TOTAL SHEETS
05	SCr	17	6.0/12.6	236	284

REGISTERED CIVIL ENGINEER 8/4/11 DATE

9-24-12
PLANS APPROVAL DATE

REGISTERED PROFESSIONAL ENGINEER T. Dudley No. C039514 Exp. 12/31/11 CIVIL STATE OF CALIFORNIA

The State of California or its officers or agents shall not be responsible for the accuracy or completeness of electronic copies of this plan sheet.

AECOM TECHNICAL SERVICES, INC.
2020 L STREET, SUITE 300
SACRAMENTO, CALIFORNIA 95811

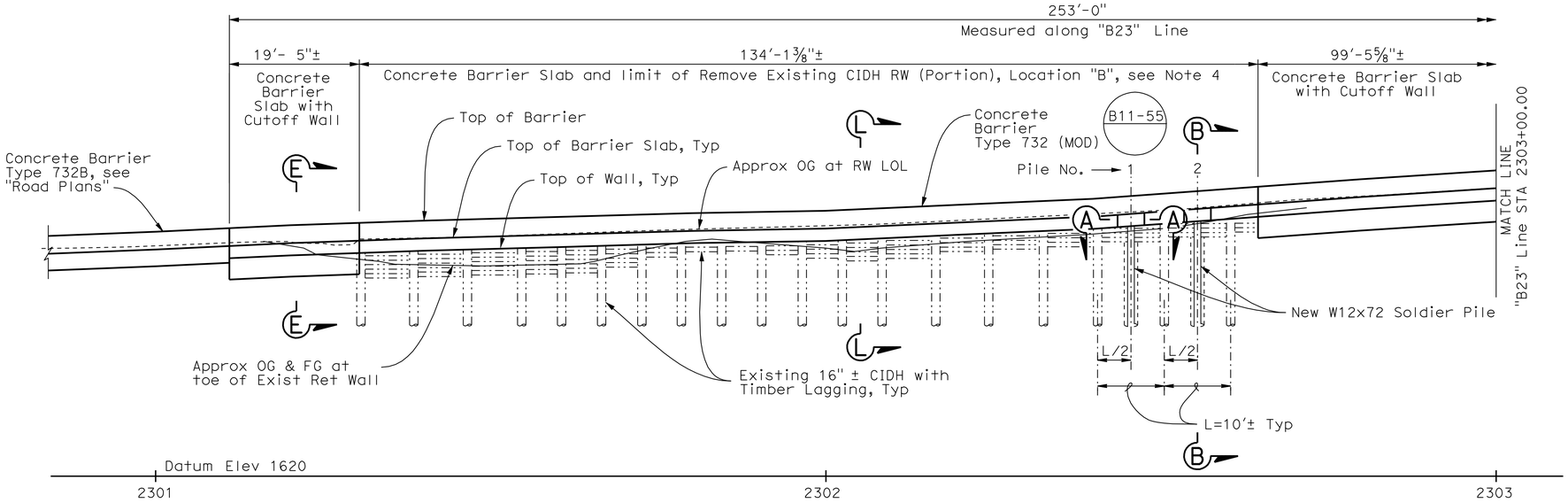

DEVELOPED ELEVATION

1" = 10'

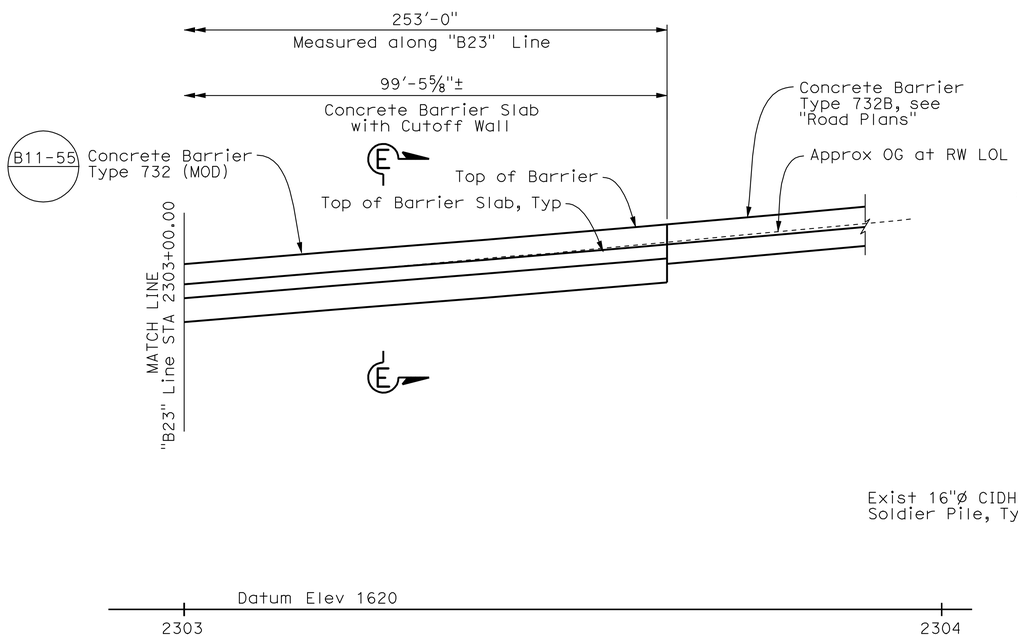

DEVELOPED ELEVATION

1" = 10'

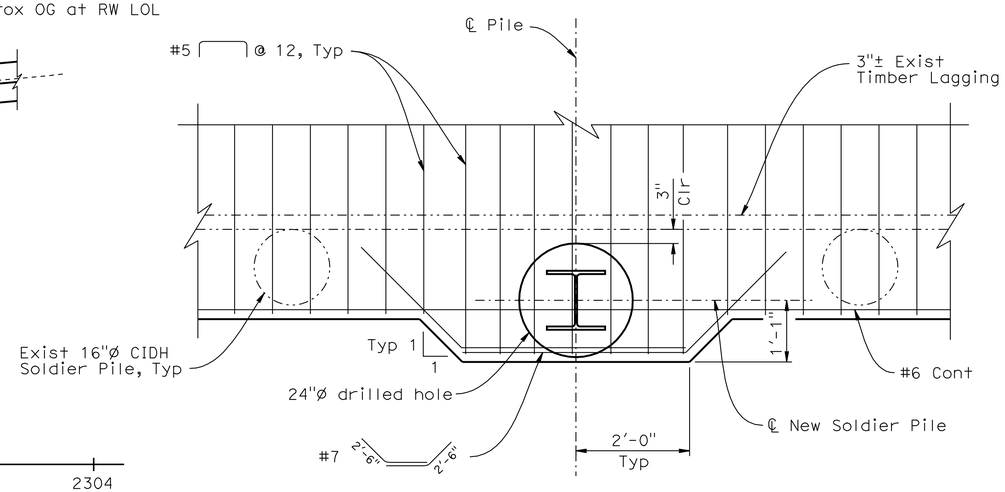

SECTION A-A

¾" = 1'-0"

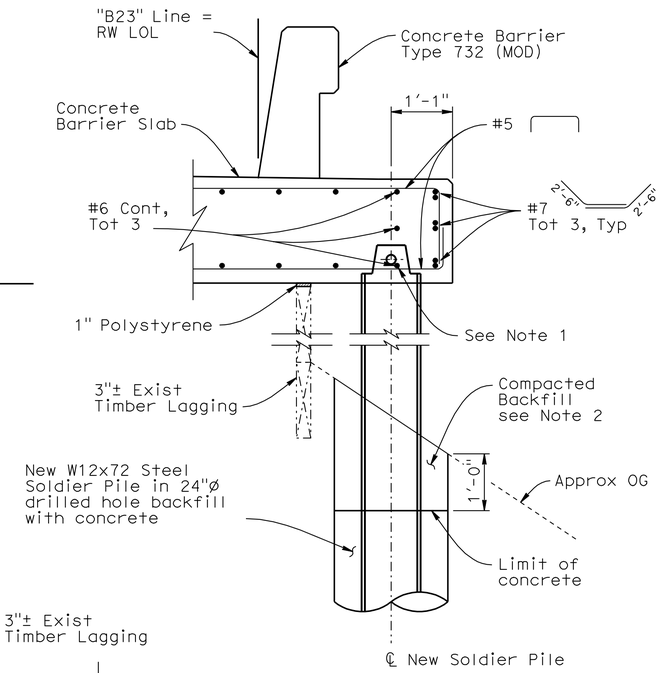

SECTION B-B

¾" = 1'-0"

Note:

1. #6 continuous bars may be terminated 2" Clr of Soldier Pile where interference occurs.
2. Grade to match existing ground profile.
3. For Section L-L, see "Details No. 6" sheet.
4. For Removal of Existing CIDH (Portion), see "Details No. 6" sheet.
5. For Section E-E, see "Details No. 3" sheet.

Note:
The Contractor shall verify all controlling field dimensions before ordering or fabricating any material.

DESIGN OVERSIGHT Wei An	DESIGN	BY T. Dudley	CHECKED R. Price
SIGN OFF DATE	DETAILS	BY C. Lee	CHECKED T. Dudley
	QUANTITIES	BY M. Stiller	CHECKED S. Desalegn

PREPARED FOR THE STATE OF CALIFORNIA DEPARTMENT OF TRANSPORTATION

Stephen J. Mislinski
PROJECT ENGINEER

BRIDGE NO. 36E-0031
POST MILE 11.26

RETAINING WALLS
RW NO. 15 STRUCTURE PLAN

DESIGN DETAIL SHEET (ENGLISH) (REV. 2/25/05)

ORIGINAL SCALE IN INCHES FOR REDUCED PLANS 0 1 2 3

CU 05
EA 0L7014

DISREGARD PRINTS BEARING EARLIER REVISION DATES

REVISION DATES (PRELIMINARY STAGE ONLY) 12/01/08 02/04/09 03/12/09 03/16/09 04/23/09 03/25/11 05/25/11 08/04/11

SHEET 39 OF 64

FILE => TBDRW15-c-sp01.dgn

USERNAME => s124196 DATE PLOTTED => 01-OCT-2012 TIME PLOTTED => 07:46

DIST	COUNTY	ROUTE	POST MILES TOTAL PROJECT	SHEET No	TOTAL SHEETS
05	SCr	17	6.0/12.6	237	284

REGISTERED CIVIL ENGINEER — DATE 8/4/11

9-24-12
PLANS APPROVAL DATE

REGISTERED PROFESSIONAL ENGINEER — T. Dudley — No. C039514 — Exp. 12/31/11 — CIVIL — STATE OF CALIFORNIA

The State of California or its officers or agents shall not be responsible for the accuracy or completeness of electronic copies of this plan sheet.

AECOM TECHNICAL SERVICES, INC.
2020 L STREET, SUITE 300
SACRAMENTO, CALIFORNIA 95811

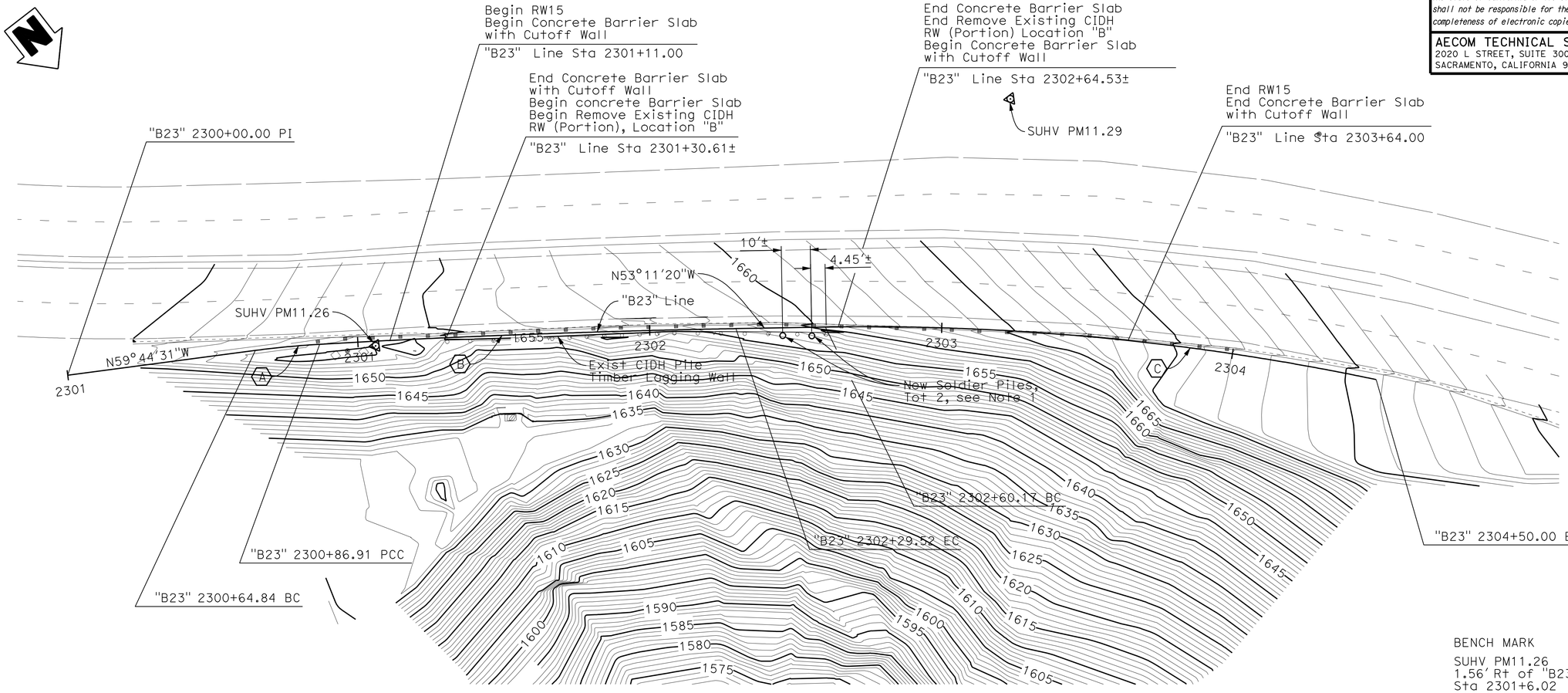

PLAN
1" = 20'

BENCH MARK

SUHV PM11.26
1.56' Rt of "B23" Line
Sta 2301+6.02
N= 1872017.310,
E= 6131843.885,
ELEV= 1654.88

SUHV PM11.29
266.98' Lt of "B23" Line
Sta 2303+19.35
N= 1872083.745,
E= 6131620.390,
ELEV= 1669.49

CURVE DATA TABLE

	R	Δ	T	L
A	300.00	4°12'58"	11.04	22.07
B	3496.00	2°20'14"	71.31	142.60
C	846.00	12°51'22"	95.31	189.83

PILE DATA TABLE

Station along "B23" Line See Note 1	Pile No.	Top of Pile Elev	Bottom of Drilled Hole Elev	Pile Section
(ft)		(ft)	(ft)	
2302+45.72±	1	1657.97	1639.47	W12x72
2302+55.72±	2	1658.71	1640.21	W12x72

Note:

1. See "RW No. 15 Structure Plan" sheet for details on new Soldier Pile installation locations.

Note:
The Contractor shall verify all controlling field dimensions before ordering or fabricating any material.

GEOTECHNICAL PROFESSIONAL APPROVAL DATE

DESIGN OVERSIGHT Wei An
SIGN OFF DATE

SCALE: As Shown | VERT.DATUM NAVD 1988 | HORZ.DATUM NAD 1983
PHOTOGRAMMETRY AS OF: X | ALIGNMENT TIES Dist. Traverse Sheet
SURVEYED BY X | DRAFTED BY X
FIELD CHECKED BY X | CHECKED BY X

DESIGN BY T. Dudley CHECKED R. Price
DETAILS BY C. Lee CHECKED T. Dudley
QUANTITIES BY M. Stiller CHECKED S. Desalegn

PREPARED FOR THE STATE OF CALIFORNIA DEPARTMENT OF TRANSPORTATION

Stephen J. Mislinski
PROJECT ENGINEER

BRIDGE NO. 36E-0031
POST MILE 11.26

RETAINING WALLS
RW NO. 15 FOUNDATION PLAN

DESIGN DETAIL SHEET (ENGLISH) (REV. 2/25/05)

ORIGINAL SCALE IN INCHES FOR REDUCED PLANS 0 1 2 3

CU 05
EA 0L7014

DISREGARD PRINTS BEARING EARLIER REVISION DATES
REVISION DATES (PRELIMINARY STAGE ONLY) 12/01/08 02/04/09 03/20/09 03/16/09 04/23/09 03/25/11 05/25/11 08/04/11

SHEET 40 OF 64

FILE => TBDRW15-e-fdp101.dgn

USERNAME => s124496 DATE PLOTTED => 01-OCT-2012 TIME PLOTTED => 07:46

DIST	COUNTY	ROUTE	POST MILES TOTAL PROJECT	SHEET No	TOTAL SHEETS
05	SCr	17	6.0/12.6	238	284

REGISTERED CIVIL ENGINEER — DATE 8/4/11

9-24-12
PLANS APPROVAL DATE

REGISTERED PROFESSIONAL ENGINEER — T. Dudley No. C039514 Exp. 12/31/11 CIVIL — STATE OF CALIFORNIA

The State of California or its officers or agents shall not be responsible for the accuracy or completeness of electronic copies of this plan sheet.

AECOM TECHNICAL SERVICES, INC.
2020 L STREET, SUITE 300
SACRAMENTO, CALIFORNIA 95811

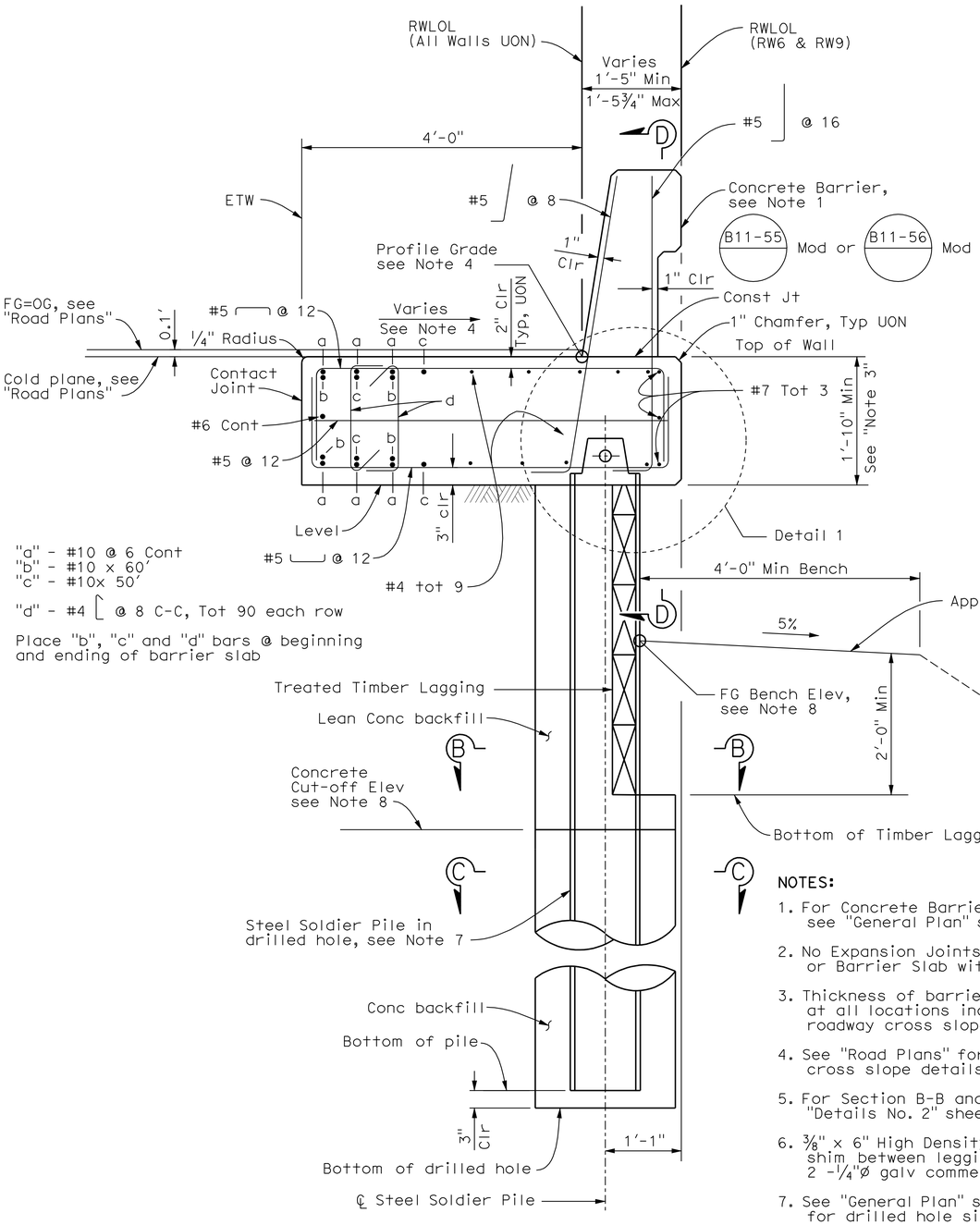

SECTION A-A
1" = 1'-0"

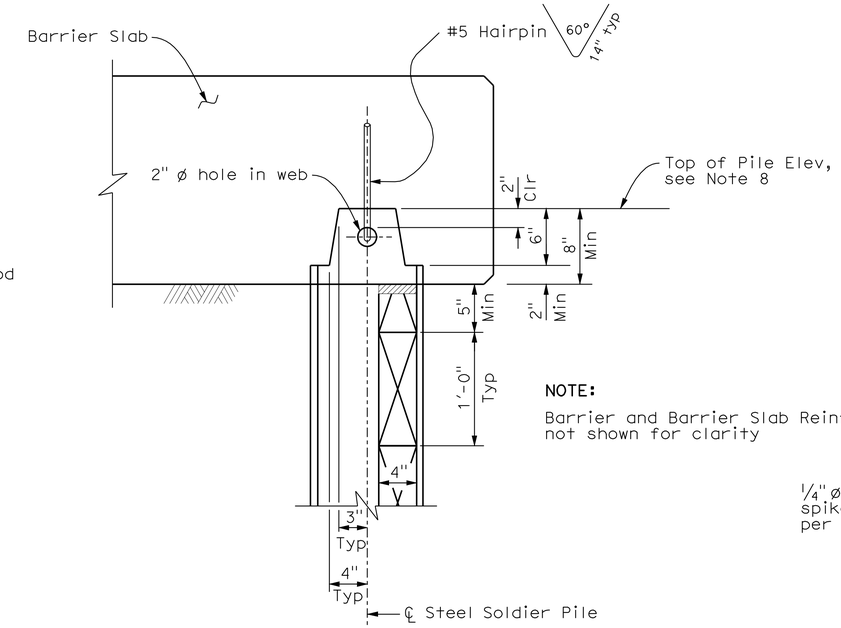

NOTE:
Barrier and Barrier Slab Reinf not shown for clarity

DETAIL 1
STEEL PILE ANCHOR
1½" = 1'-0"

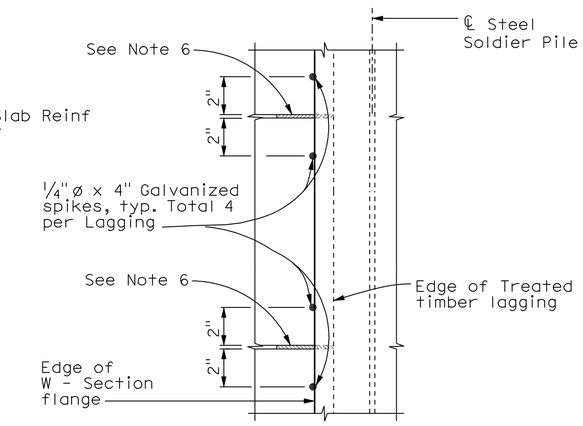

DETAIL 2
1½" = 1-0"

NOTES:

1. For Concrete Barrier Type, see "General Plan" sheets.
2. No Expansion Joints in Concrete Barrier or Barrier Slab within Length of Wall
3. Thickness of barrier slab to be 1'-10" min at all locations including allowances for roadway cross slopes.
4. See "Road Plans" for roadway Profile and cross slope details.
5. For Section B-B and C-C, see "Details No. 2" sheet.
6. ⅜" x 6" High Density Polyethylene (HDPE) shim between legging members secured with 2 -¼"ø galv commercial wire nails.
7. See "General Plan" sheet for each Retaining Wall for drilled hole size.
8. See Pile Data Table on "Foundation Plan" sheet for each Retaining Wall for Top of Pile, Concrete Cut-off Elevation and FG Bench Elevation.

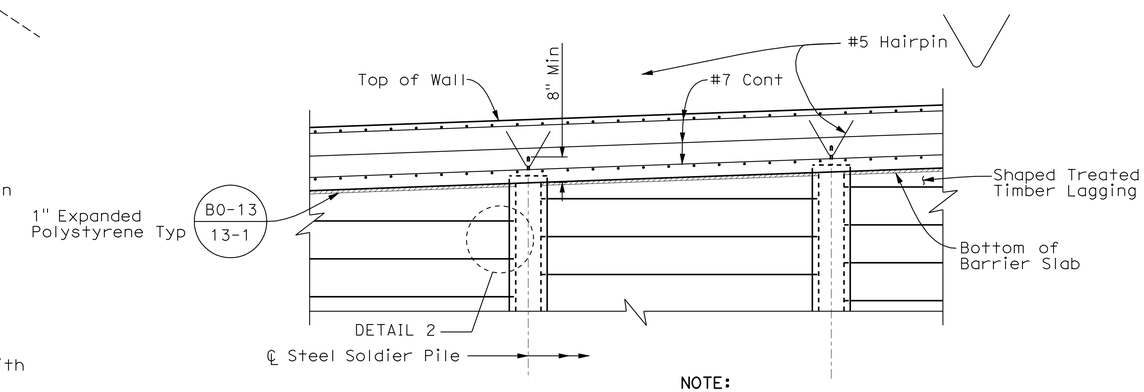

NOTE:
Barrier not shown for clarity

SECTION D-D
½" = 1'-0"

Note:
The Contractor shall verify all controlling field dimensions before ordering or fabricating any material.

DESIGN OVERSIGHT: Wei An	DESIGN	BY T. Dudley	CHECKED R. Price
SIGN OFF DATE	DETAILS	BY S. Desalegn	CHECKED R. Price
	QUANTITIES	BY T. Dudley	CHECKED E. Nevarez

PREPARED FOR THE STATE OF CALIFORNIA DEPARTMENT OF TRANSPORTATION

Stephen J. Mislinski
PROJECT ENGINEER

BRIDGE NO. Varies
POST MILE Varies

RETAINING WALLS
DETAILS NO. 1

DESIGN DETAIL SHEET (ENGLISH) (REV. 2/25/05)

ORIGINAL SCALE IN INCHES FOR REDUCED PLANS 0 1 2 3

CU 05
EA 0L7014

DISREGARD PRINTS BEARING EARLIER REVISION DATES

REVISION DATES (PRELIMINARY STAGE ONLY): 9/30/08 12/09/08 02/04/09 03/10/09 03/16/09 04/23/09 03/25/11 05/25/11 08/04/11

SHEET 41 OF 64

FILE => TBDRWD-1-rwdt01.dgn

USERNAME => s124496 DATE PLOTTED => 01-OCT-2012 TIME PLOTTED => 07:46

DIST	COUNTY	ROUTE	POST MILES TOTAL PROJECT	SHEET No	TOTAL SHEETS
05	SCr	17	6.0/12.6	239	284

REGISTERED CIVIL ENGINEER — DATE 8/4/11

9-24-12
PLANS APPROVAL DATE

REGISTERED PROFESSIONAL ENGINEER — T. Dudley — No. C039514 — Exp. 12/31/11 — CIVIL — STATE OF CALIFORNIA

The State of California or its officers or agents shall not be responsible for the accuracy or completeness of electronic copies of this plan sheet.

AECOM TECHNICAL SERVICES, INC.
2020 L STREET, SUITE 300
SACRAMENTO, CALIFORNIA 95811

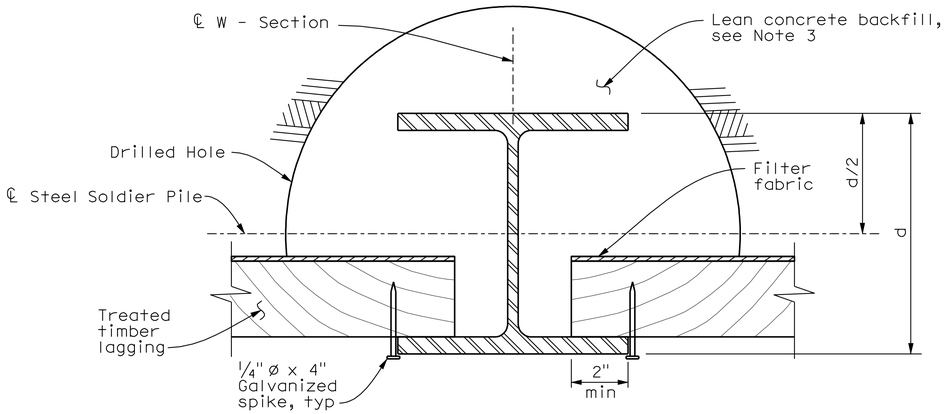

AT INTERIOR SOLDIER PILE
SECTION B-B
3" = 1-0"

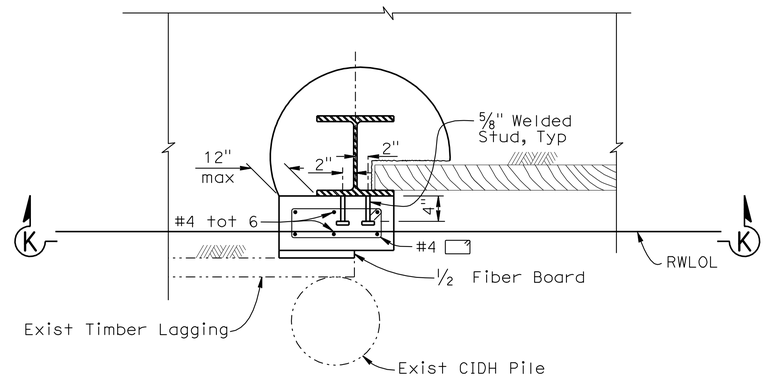

SECTION J-J
1" = 1'-0"

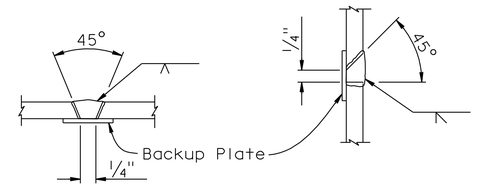

SINGLE VEE-GROOVE — SINGLE BEVEL-GROOVE

PILE WELDING DETAIL-BUTT JOINTS

Notes:
1. Single Vee-Groove and Square Groove Permitted for all positions.
2. Single Bevel-Groove permitted for horizontal joints only

NOTE:
For Details not shown, see "Details No. 1" sheet

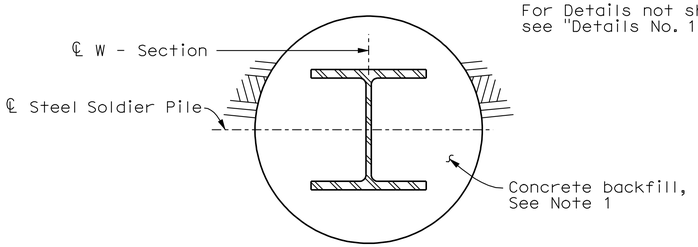

SECTION C-C
1 1/2" = 1-0"

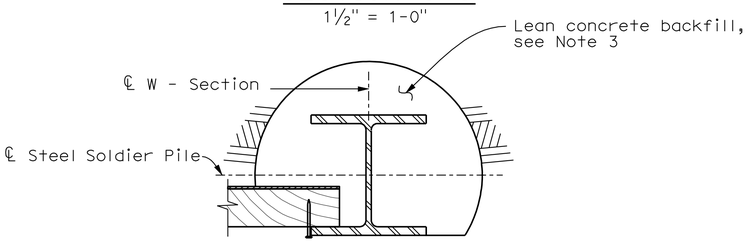

AT EXTERIOR SOLDIER PILE
SECTION D-D
1 1/2" = 1-0"

Note:
The Contractor shall verify all controlling field dimensions before ordering or fabricating any material.

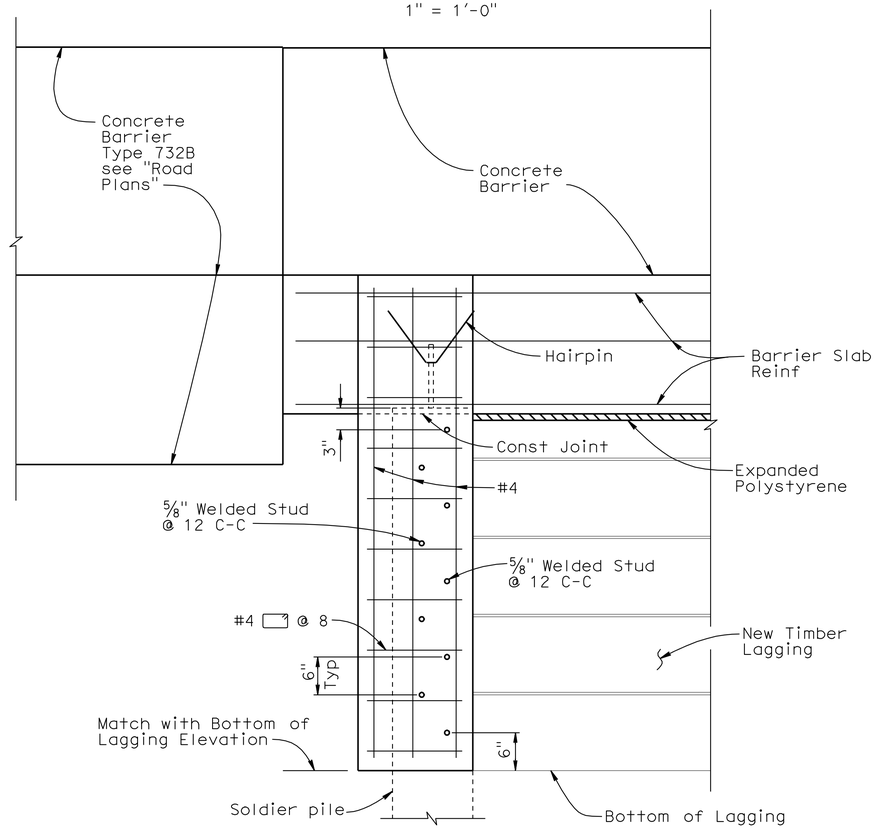

SECTION K-K
1" = 1'-0"

Notes:
1. For Limits of Concrete Backfill, See "General Notes" sheet.
2. Diagonally opposite corners of lagging members may be cut to facilitate placement.
3. Remove lean concrete backfill as necessary for placement of lagging and filter fabric.

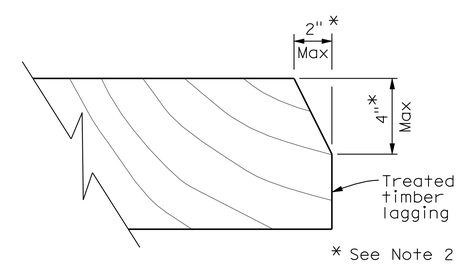

* See Note 2

PART ELEVATION OF LAGGING MEMBER
No Scale

DESIGN OVERSIGHT: Wei An	DESIGN	BY T. Dudley	CHECKED R. Price
SIGN OFF DATE	DETAILS	BY S. Desalegn	CHECKED R. Price
	QUANTITIES	BY T. Dudley	CHECKED E. Nevarez

PREPARED FOR THE STATE OF CALIFORNIA DEPARTMENT OF TRANSPORTATION

Stephen J. Mislinski
PROJECT ENGINEER

BRIDGE NO. Varies
POST MILE Varies

RETAINING WALLS
DETAILS NO. 2

DESIGN DETAIL SHEET (ENGLISH) (REV. 2/25/05)

ORIGINAL SCALE IN INCHES FOR REDUCED PLANS 0 1 2 3

CU 05
EA 0L7014

DISREGARD PRINTS BEARING EARLIER REVISION DATES → 3/30/08 12/01/08 02/04/09 03/16/09 03/16/09 04/23/09 03/25/11 05/25/11 08/04/11

SHEET 42 OF 64

FILE => TBDRWD-1-rwdt02.dgn

USERNAME => s124496 DATE PLOTTED => 01-OCT-2012 TIME PLOTTED => 07:46

DIST	COUNTY	ROUTE	POST MILES TOTAL PROJECT	SHEET No	TOTAL SHEETS
05	SCr	17	6.0/12.6	240	284

REGISTERED CIVIL ENGINEER — DATE 8/4/11

9-24-12
PLANS APPROVAL DATE

REGISTERED PROFESSIONAL ENGINEER — T. Dudley — No. C039514 — Exp. 12/31/11 — CIVIL — STATE OF CALIFORNIA

The State of California or its officers or agents shall not be responsible for the accuracy or completeness of electronic copies of this plan sheet.

AECOM TECHNICAL SERVICES, INC.
2020 L STREET, SUITE 300
SACRAMENTO, CALIFORNIA 95811

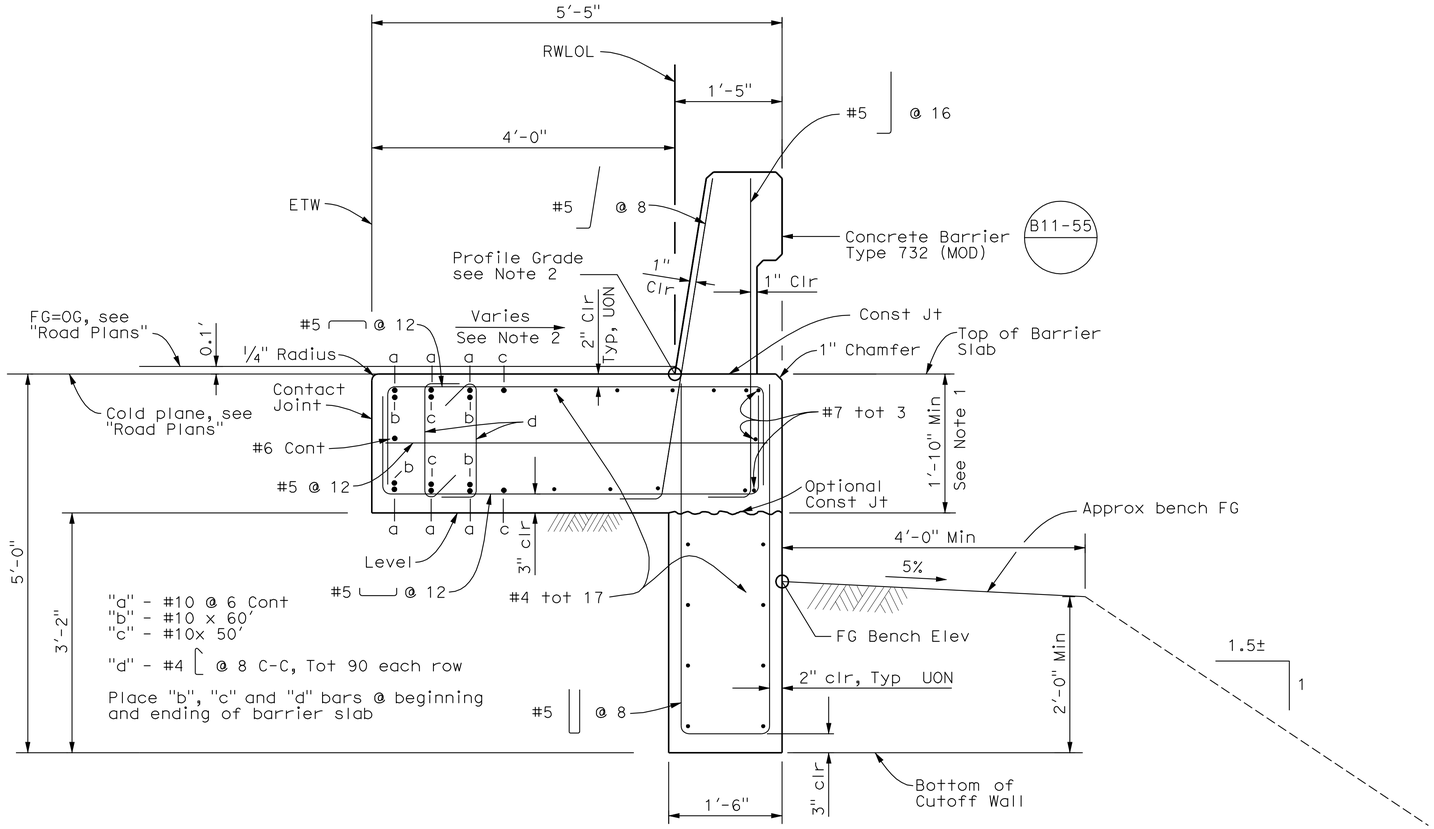

SECTION E-E
1" = 1'-0"

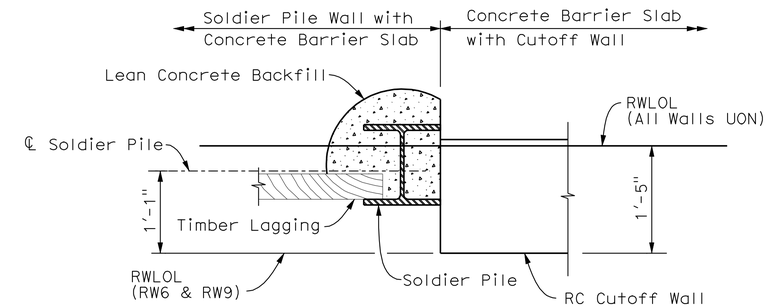

For information not shown, see "Details No. 2" sheet

SECTION F-F
1" = 1'-0"

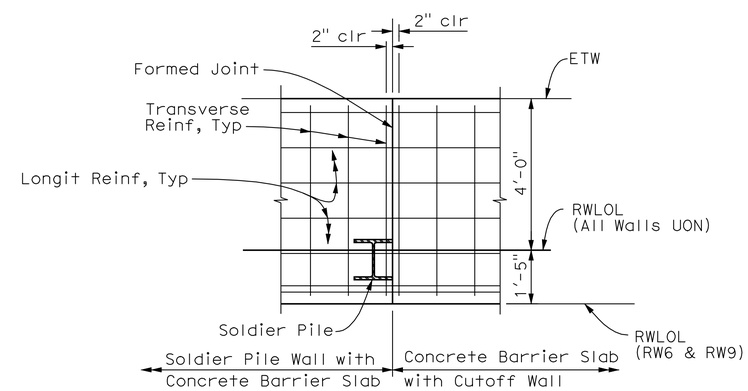

NOTE:

Longit Reinf shall be continuous between section types.

SECTION G-G
1/2" = 1'-0"

NOTES:

1. Thickness of barrier slab to be 1'-10" min at all locations, including allowances for roadway cross slope.
2. See "Road Plans" for roadway Profile and cross slope details.

Note:
The Contractor shall verify all controlling field dimensions before ordering or fabricating any material.

DESIGN OVERSIGHT: Wei An	DESIGN	BY T. Dudley	CHECKED R. Price
SIGN OFF DATE	DETAILS	BY S. Desalegn	CHECKED R. Price
	QUANTITIES	BY T. Dudley	CHECKED E. Nevarez

PREPARED FOR THE STATE OF CALIFORNIA DEPARTMENT OF TRANSPORTATION

Stephen J. Mislinski
PROJECT ENGINEER

BRIDGE NO. Varies
POST MILE Varies

RETAINING WALLS
DETAILS NO. 3

DESIGN DETAIL SHEET (ENGLISH) (REV. 2/25/05)

ORIGINAL SCALE IN INCHES FOR REDUCED PLANS 0 1 2 3

CU 05
EA 0L7014

DISREGARD PRINTS BEARING EARLIER REVISION DATES

REVISION DATES (PRELIMINARY STAGE ONLY): 9/30/08 12/01/08 02/04/09 03/16/09 03/16/09 04/23/09 03/25/11 05/25/11 08/04/11

SHEET 43 OF 64

FILE => TBDRWD-1-rwdt03.dgn

USERNAME => s124496 DATE PLOTTED => 01-OCT-2012 TIME PLOTTED => 07:46

DIST	COUNTY	ROUTE	POST MILES TOTAL PROJECT	SHEET No	TOTAL SHEETS
05	SCr	17	6.0/12.6	241	284

REGISTERED CIVIL ENGINEER — DATE 8/4/11

9-24-12
PLANS APPROVAL DATE

REGISTERED PROFESSIONAL ENGINEER — T. Dudley — No. C039514 — Exp. 12/31/11 — CIVIL — STATE OF CALIFORNIA

The State of California or its officers or agents shall not be responsible for the accuracy or completeness of electronic copies of this plan sheet.

AECOM TECHNICAL SERVICES, INC.
2020 L STREET, SUITE 300
SACRAMENTO, CALIFORNIA 95811

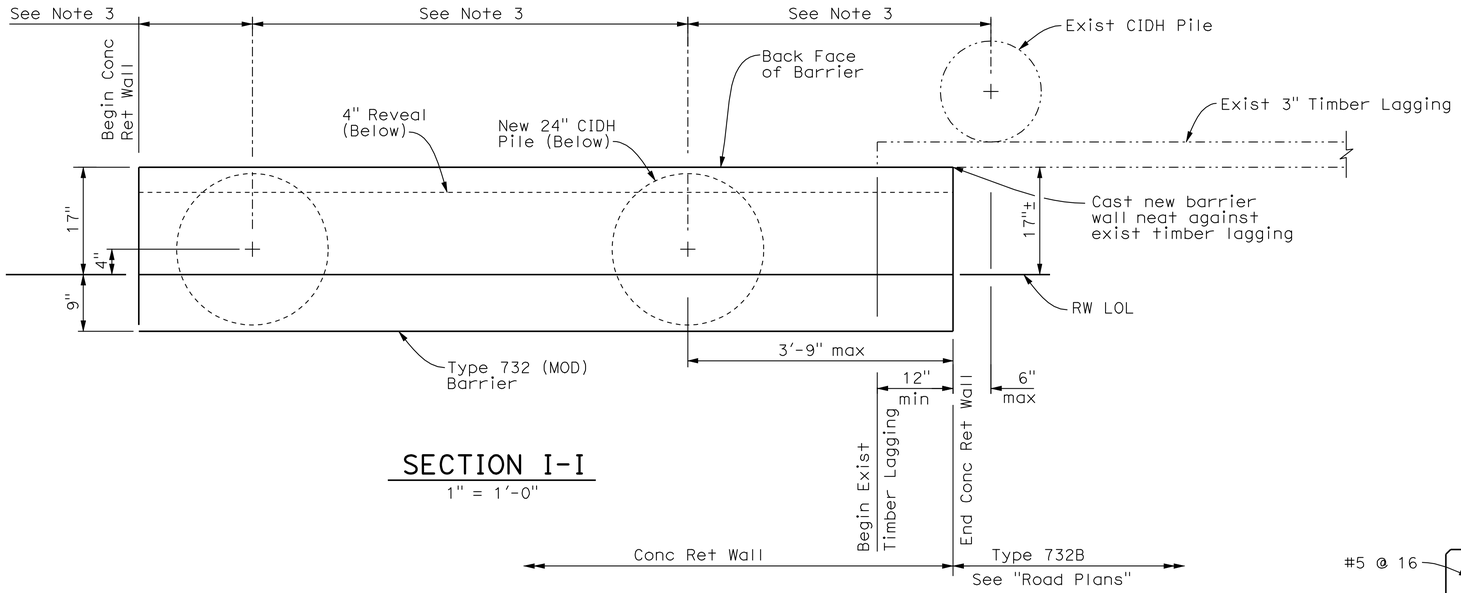

SECTION I-I

1" = 1'-0"

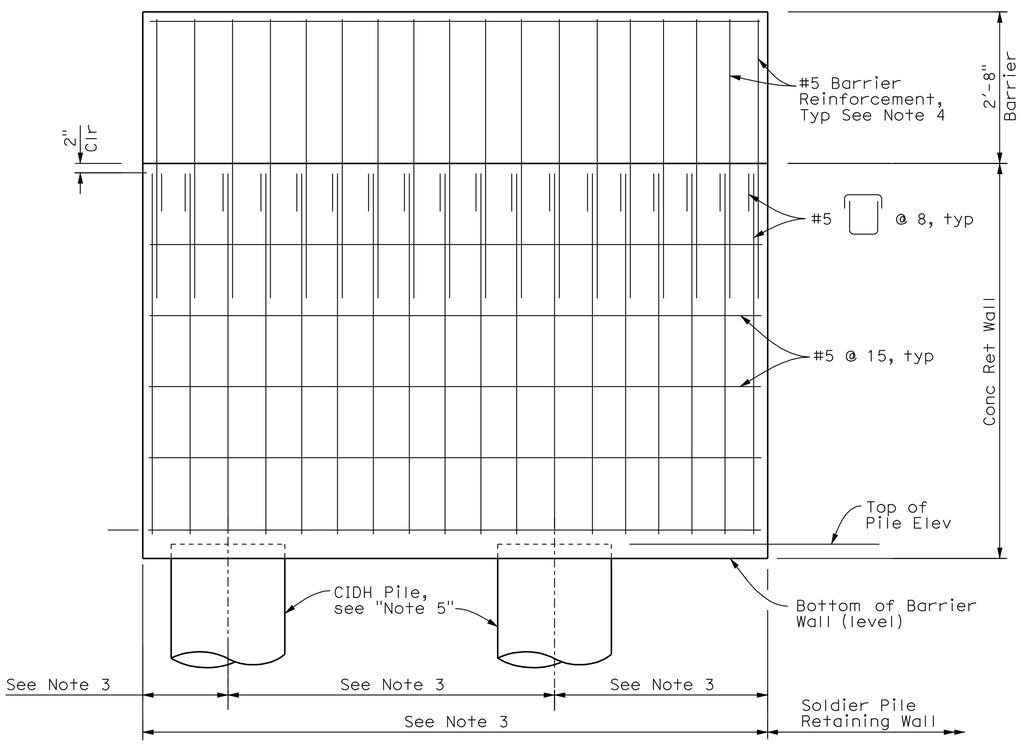

DETAIL 3
CONCRETE RETAINING WALL

¾" = 1'-0"

Note:
The Contractor shall verify all controlling field dimensions before ordering or fabricating any material.

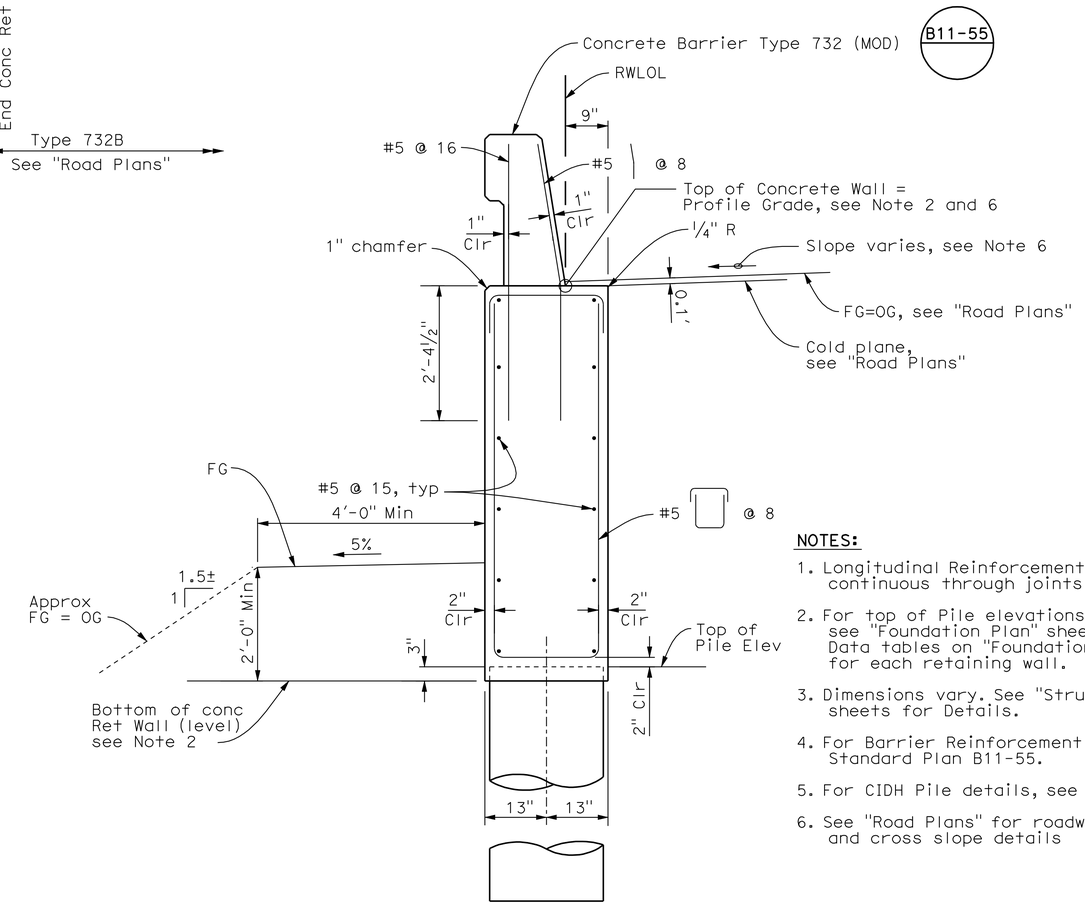

SECTION H-H
CONCRETE RETAINING WALL

¾" = 1'-0"

NOTES:

1. Longitudinal Reinforcement shall be continuous through joints in Barrier.
2. For top of Pile elevations, see "Foundation Plan" sheets and Pile Data tables on "Foundation Plan" sheet for each retaining wall.
3. Dimensions vary. See "Structure Plan" sheets for Details.
4. For Barrier Reinforcement not shown, see Standard Plan B11-55.
5. For CIDH Pile details, see "Details No. 5" sheet.
6. See "Road Plans" for roadway profile and cross slope details

DESIGN OVERSIGHT: Wei An	DESIGN	BY T. Dudley	CHECKED R. Price	PREPARED FOR THE STATE OF CALIFORNIA DEPARTMENT OF TRANSPORTATION	Stephen J. Mislinski, PROJECT ENGINEER
SIGN OFF DATE	DETAILS	BY S. Desalegn	CHECKED R. Price		
	QUANTITIES	BY T. Dudley / M. Stiller	CHECKED E. Nevarez/S. Desalegn		

BRIDGE NO. Varies — POST MILE Varies

RETAINING WALLS
DETAILS NO. 4

DESIGN DETAIL SHEET (ENGLISH) (REV. 2/25/05)

ORIGINAL SCALE IN INCHES FOR REDUCED PLANS 0 1 2 3

CU 05
EA 0L7014

DISREGARD PRINTS BEARING EARLIER REVISION DATES

REVISION DATES (PRELIMINARY STAGE ONLY): 9/30/08 12/01/08 02/04/09 03/10/09 03/16/09 04/23/09 03/28/11 05/25/11 08/04/11

SHEET 44 OF 64

FILE => TBDRWD-1-rwdt04.dgn

USERNAME => s124196 DATE PLOTTED => 01-OCT-2012 TIME PLOTTED => 08:10

DIST	COUNTY	ROUTE	POST MILES TOTAL PROJECT	SHEET No	TOTAL SHEETS
05	SCr	17	6.0/12.6	242	284

REGISTERED CIVIL ENGINEER 8/4/11 DATE

9-24-12
PLANS APPROVAL DATE

REGISTERED PROFESSIONAL ENGINEER T. Dudley No. C039514 Exp. 12/31/11 CIVIL STATE OF CALIFORNIA

The State of California or its officers or agents shall not be responsible for the accuracy or completeness of electronic copies of this plan sheet.

AECOM TECHNICAL SERVICES, INC.
2020 L STREET, SUITE 300
SACRAMENTO, CALIFORNIA 95811

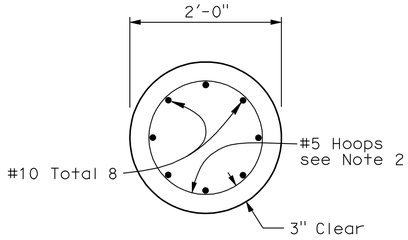

SECTION A-A
1" = 1'-0"

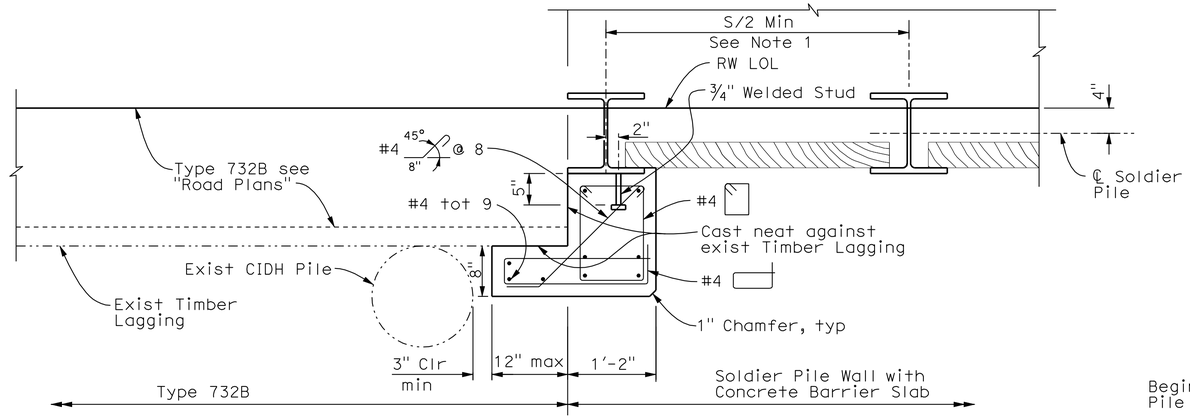

SECTION B-B
1" = 1'-0"

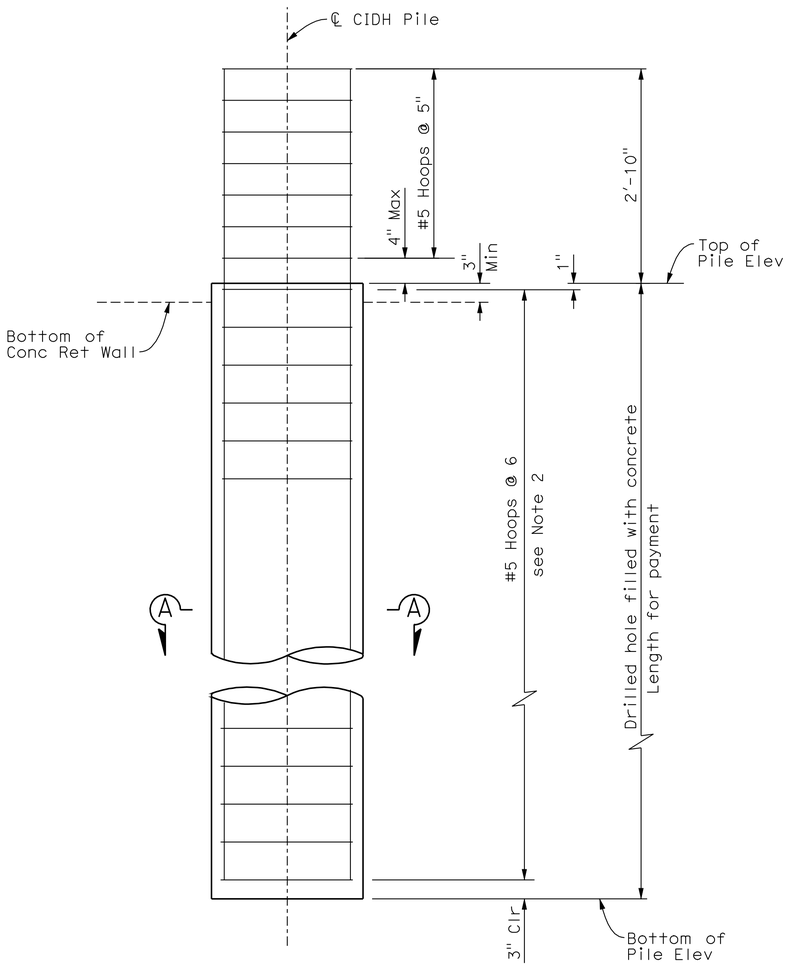

24"Ø CIDH PILE ELEVATION
1" = 1'-0"

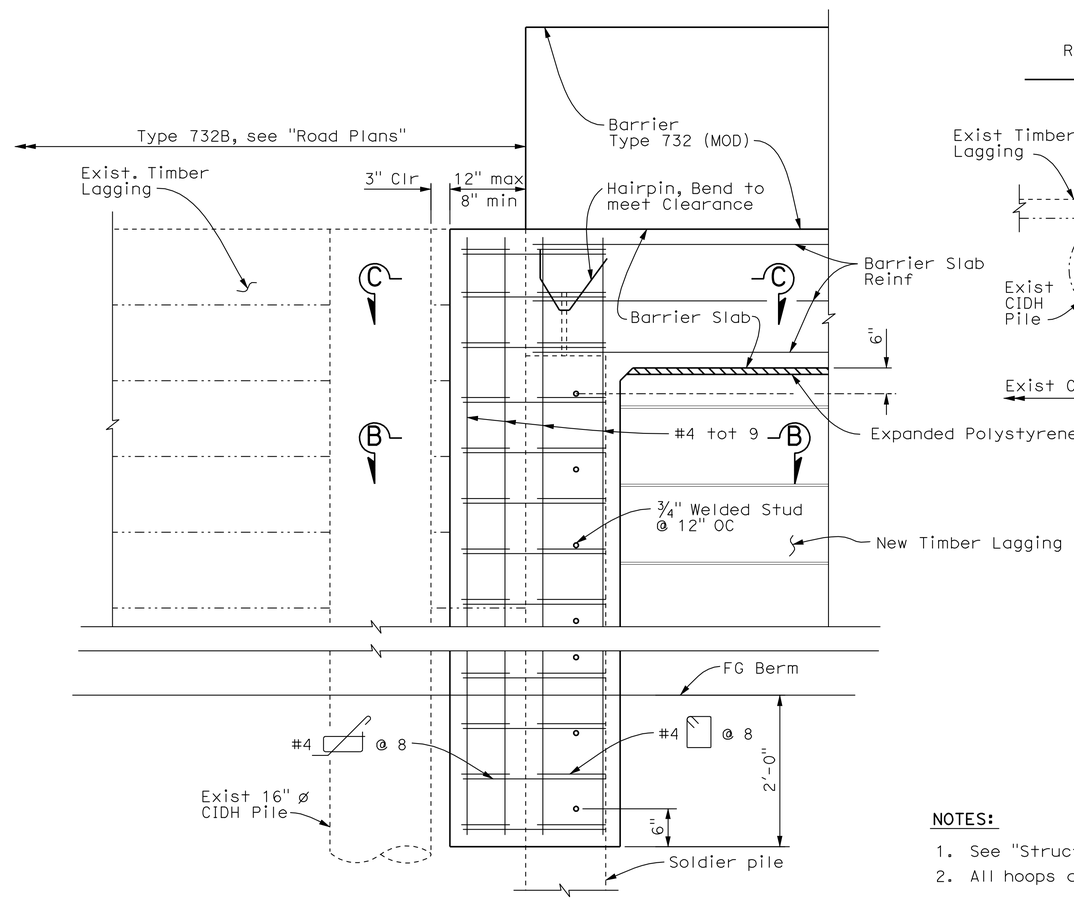

DETAIL 4
1" = 1'-0"

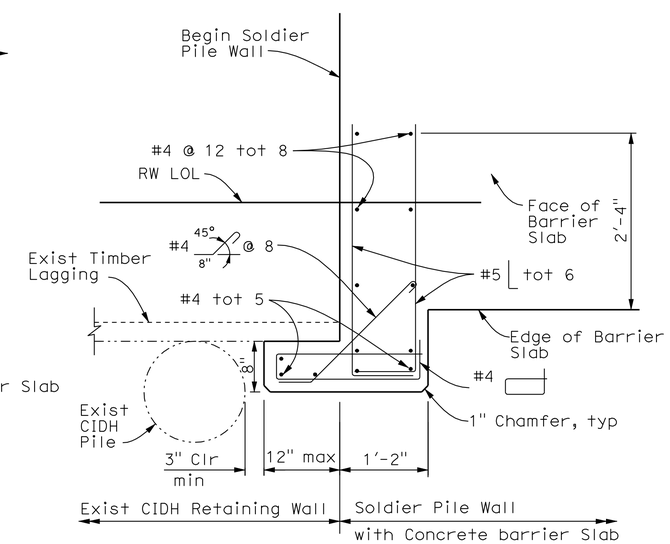

SECTION C-C
1" = 1'-0"

NOTES:

1. See "Structure Plan" sheets for Soldier Pile Spacing.
2. All hoops are "Ultimate" Butt Spliced continuous.

Note:
The Contractor shall verify all controlling field dimensions before ordering or fabricating any material.

DESIGN OVERSIGHT Wei An
SIGN OFF DATE

	BY	CHECKED
DESIGN	T. Dudley	R. Price
DETAILS	S. Desalegn	R. Price
QUANTITIES	T. Dudley / M. Stiller	E. Nevarez/S. Desalegn

PREPARED FOR THE STATE OF CALIFORNIA DEPARTMENT OF TRANSPORTATION

Stephen J. Mislinski
PROJECT ENGINEER

BRIDGE NO. Varies
POST MILE Varies

RETAINING WALLS
DETAILS NO. 5

DESIGN DETAIL SHEET (ENGLISH) (REV. 2/25/05)

ORIGINAL SCALE IN INCHES FOR REDUCED PLANS 0 1 2 3

CU 05
EA 0L7014

DISREGARD PRINTS BEARING EARLIER REVISION DATES

REVISION DATES (PRELIMINARY STAGE ONLY): 9/30/08 12/09/08 02/04/09 03/16/09 03/16/09 04/23/09 03/25/11 05/26/11 08/04/11

SHEET 45 OF 64

FILE => TBDRWD-1-rwdt05.dgn

USERNAME => s124496 DATE PLOTTED => 01-OCT-2012 TIME PLOTTED => 08:10

DIST	COUNTY	ROUTE	POST MILES TOTAL PROJECT	SHEET No	TOTAL SHEETS
05	SCr	17	6.0/12.6	243	284

REGISTERED CIVIL ENGINEER — DATE 8/4/11

9-24-12
PLANS APPROVAL DATE

REGISTERED PROFESSIONAL ENGINEER — T. Dudley — No. C039514 — Exp. 12/31/11 — CIVIL — STATE OF CALIFORNIA

The State of California or its officers or agents shall not be responsible for the accuracy or completeness of electronic copies of this plan sheet.

AECOM TECHNICAL SERVICES, INC.
2020 L STREET, SUITE 300
SACRAMENTO, CALIFORNIA 95811

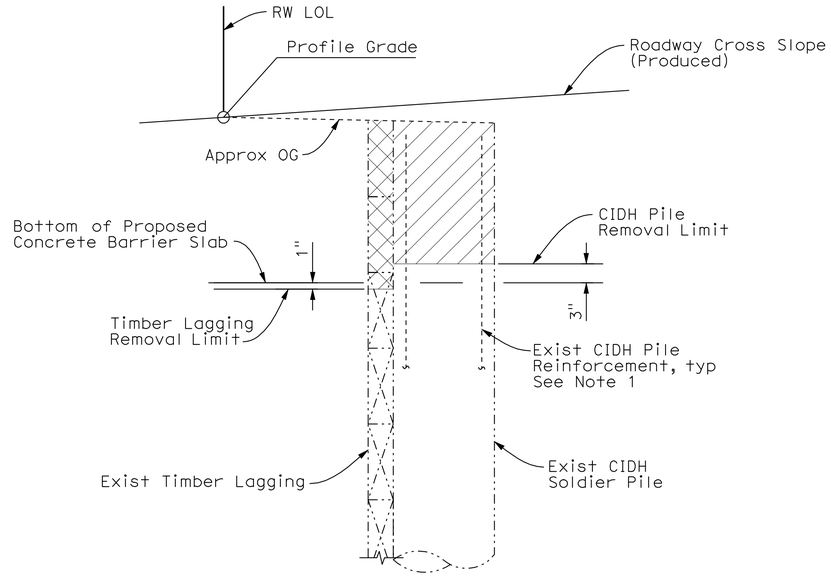

RETAINING WALL REMOVAL DETAIL (PORTION)

1" = 1'-0"

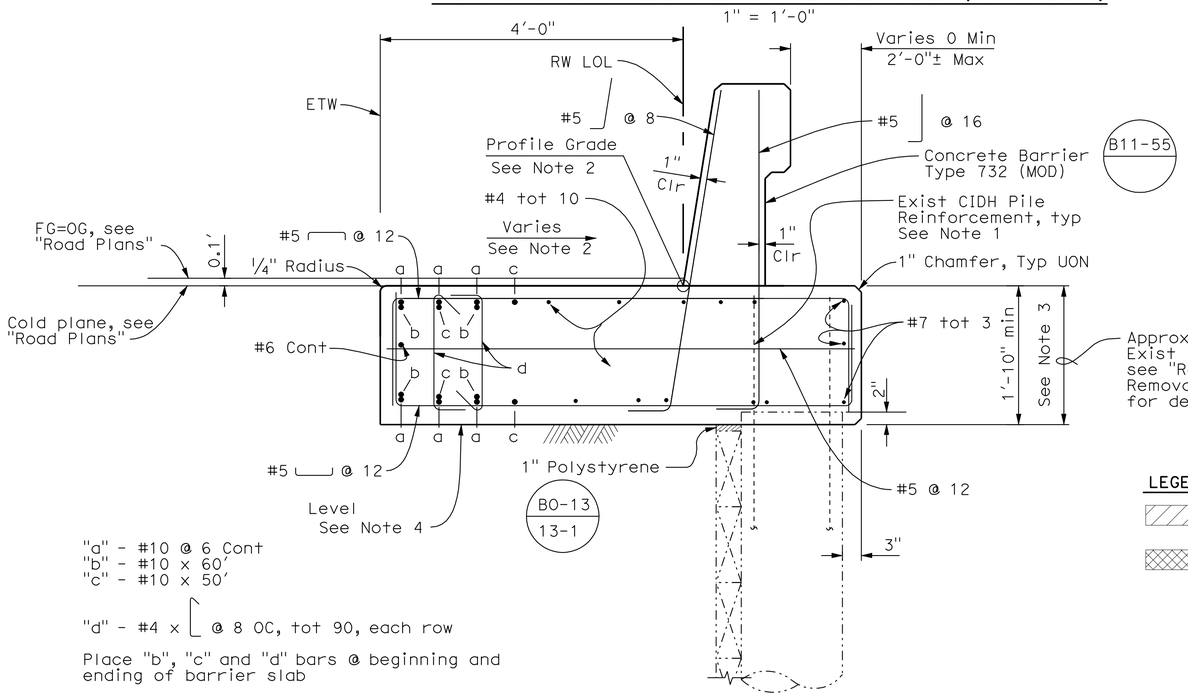

SECTION L-L

1" = 1'-0"

Note:
The Contractor shall verify all controlling field dimensions before ordering or fabricating any material.

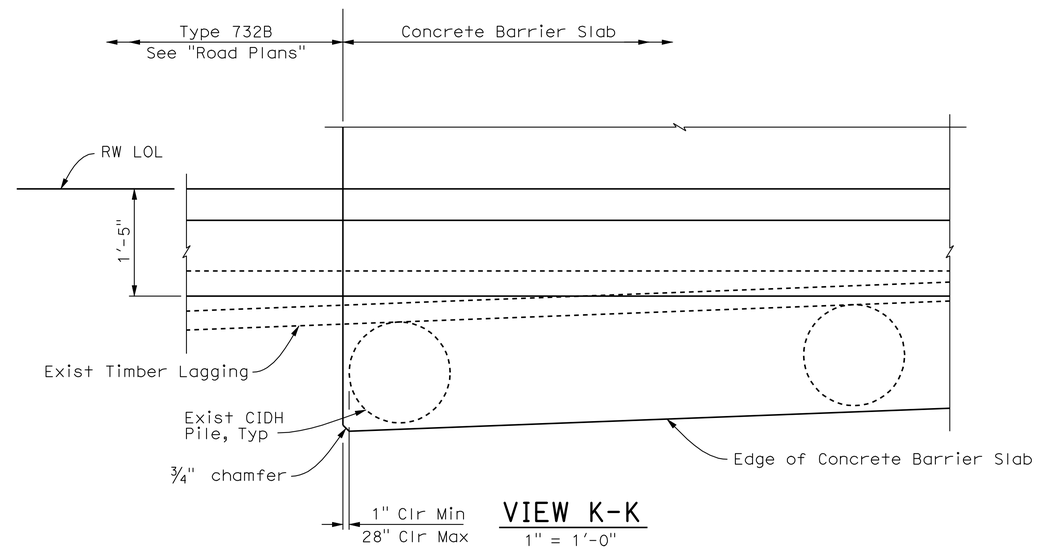

VIEW K-K

1" = 1'-0"

LEGEND

- Existing CIDH Pile Removal
- Existing Timber Lagging Removal

NOTES:

1. Protect exist reinforcement in place during demolition and extend into new barrier slab construction.
2. See "Road Plans" for Roadway Profile and cross slope details.
3. Minimum thickness of Barrier Slab to be measured at the thinnest portion of the Slab, accounting for roadway cross slope and superelevation.
4. Bottom of Barrier Slab to be level when measured perpendicular to the RW LOL. Bottom of Barrier Slab to be constructed parallel to the Profile Grade.

DESIGN OVERSIGHT — Wei An	DESIGN	BY T. Dudley	CHECKED R. Price	PREPARED FOR THE STATE OF CALIFORNIA DEPARTMENT OF TRANSPORTATION
SIGN OFF DATE	DETAILS	BY S. Desalegn	CHECKED R. Price	
	QUANTITIES	BY T. Dudley / M. Stiller	CHECKED E. Nevarez/S. Desalegn	

Stephen J. Mislinski
PROJECT ENGINEER

BRIDGE NO. Varies
POST MILE Varies

RETAINING WALLS
DETAILS NO. 6

DESIGN DETAIL SHEET (ENGLISH) (REV. 2/25/05)

ORIGINAL SCALE IN INCHES FOR REDUCED PLANS 0 1 2 3

CU 05
EA 0L7014

DISREGARD PRINTS BEARING EARLIER REVISION DATES

REVISION DATES (PRELIMINARY STAGE ONLY): 9/30/08 12/01/08 02/04/09 03/16/09 03/16/09 04/23/09 03/25/11 05/25/11 08/04/11

SHEET 46 OF 64

FILE => TBDRWD-1-rwdt06.dgn

USERNAME => s124496 DATE PLOTTED => 01-OCT-2012 TIME PLOTTED => 08:10

DIST	COUNTY	ROUTE	POST MILES TOTAL PROJECT	SHEET No	TOTAL SHEETS
05	SCr	17	6.0/12.6	244	284

REGISTERED CIVIL ENGINEER 8/4/11 DATE

9-24-12
PLANS APPROVAL DATE

REGISTERED PROFESSIONAL ENGINEER T. Dudley No. C039514 Exp. 12/31/11 CIVIL STATE OF CALIFORNIA

The State of California or its officers or agents shall not be responsible for the accuracy or completeness of electronic copies of this plan sheet.

AECOM TECHNICAL SERVICES, INC.
2020 L STREET, SUITE 300
SACRAMENTO, CALIFORNIA 95811

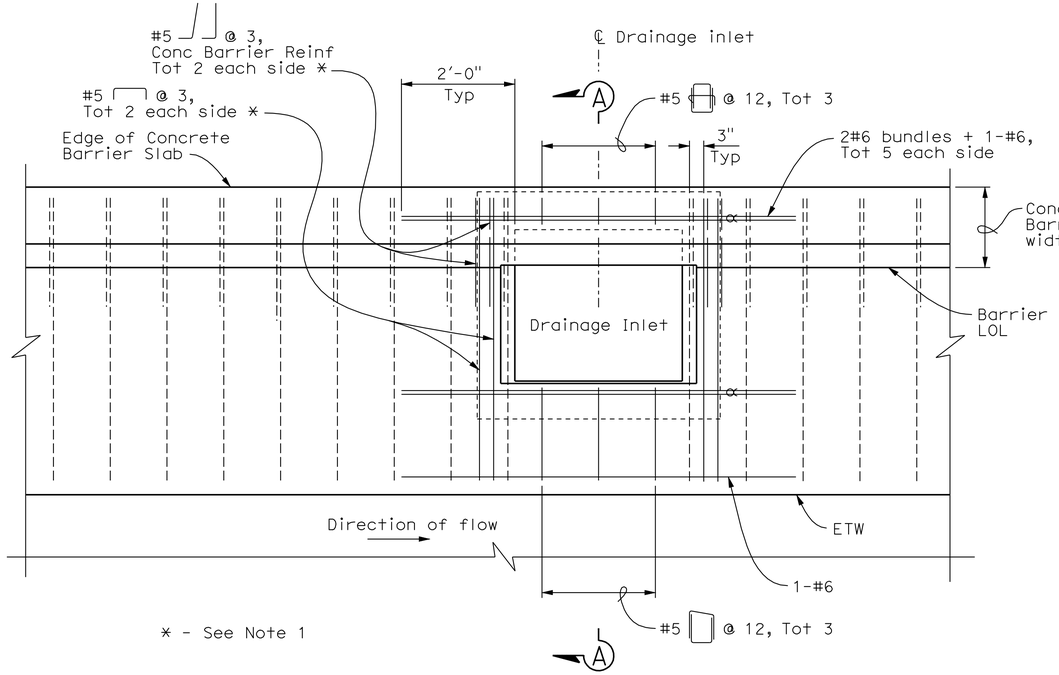

PLAN
3/4" = 1'-0"

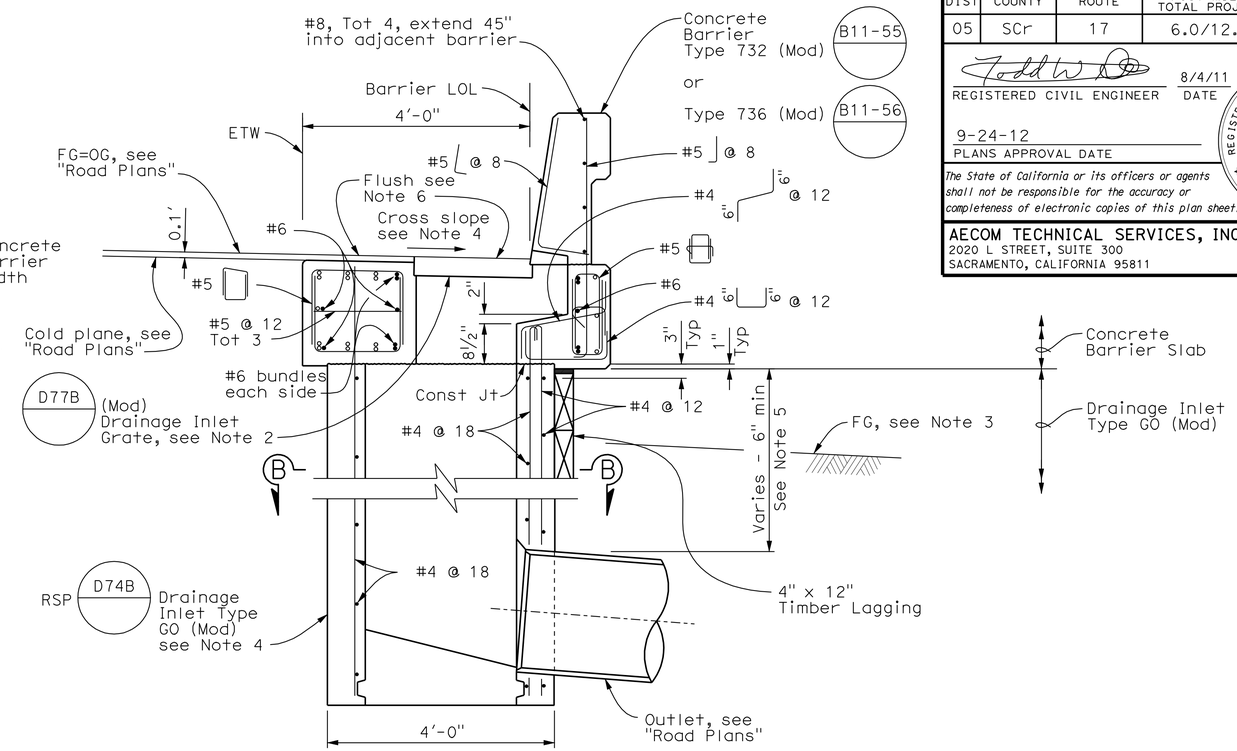

SECTION A-A
3/4" = 1'-0"

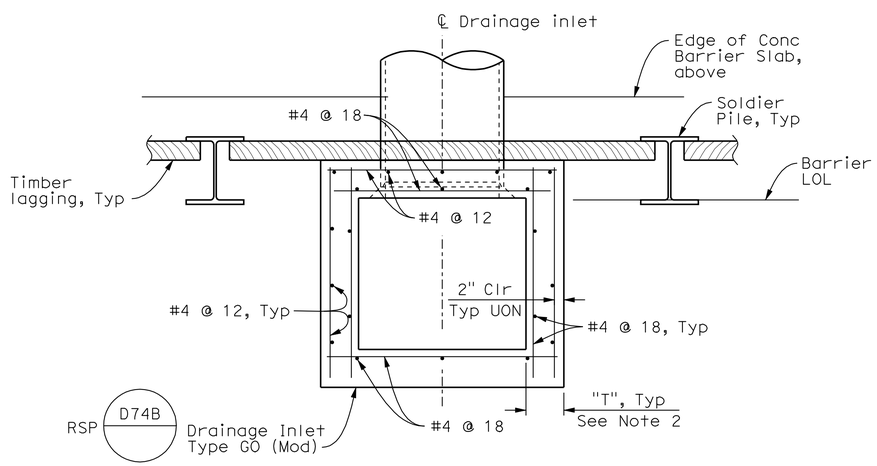

CONCRETE BARRIER WITH SOLDIER PILE WALL
SECTION B-B
3/4" = 1'-0"

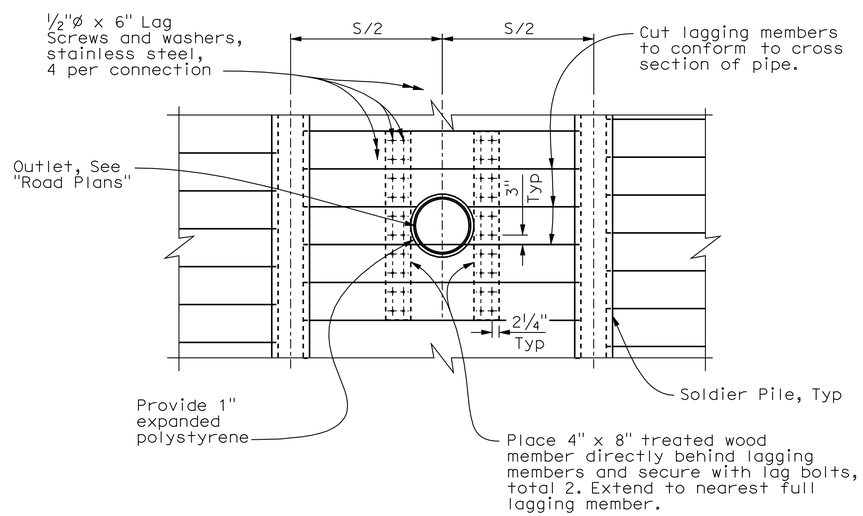

LAGGING OPENING DETAIL
1/2" = 1'-0" See Note 7

LEGEND:

- Indicates Standard Concrete Barrier Slab Reinf, see Notes 1
- Bundled bars

NOTES:

1. For Concrete Barrier Slab with Soldier Pile Wall, see "Details No. 1" sheets.
2. For details not shown, refer to Standard Plans.
3. See "Structure Plan" sheets for each retaining wall for approximate FG line.
4. Match existing Cross Slope UON. See "Road Plans" for details.
5. See "Road Plans" for outlet details.
6. Inlet grade shall be installed flush with the FG surface of 0.1' HMA overlay.
7. Lagging opening detail applies wherever drainage outlets are required to penetrate timber lagging.

Note:
The Contractor shall verify all controlling field dimensions before ordering or fabricating any material.

DESIGN OVERSIGHT Wei An
SIGN OFF DATE

	BY	CHECKED
DESIGN	T. Dudley	R. Price
DETAILS	C. Lee	T. Dudley
QUANTITIES	T. Dudley	E. Nevarez

PREPARED FOR THE STATE OF CALIFORNIA DEPARTMENT OF TRANSPORTATION

Stephen J. Mislinski
PROJECT ENGINEER

BRIDGE NO. Varies
POST MILE Varies

RETAINING WALLS
DRAINAGE INLET DETAILS NO. 1

DESIGN DETAIL SHEET (ENGLISH) (REV. 2/25/05)

ORIGINAL SCALE IN INCHES FOR REDUCED PLANS 0 1 2 3

CU 05
EA 0L7014

DISREGARD PRINTS BEARING EARLIER REVISION DATES
REVISION DATES (PRELIMINARY STAGE ONLY) 9/30/08 02/04/09 03/10/09 03/16/09 04/23/09 03/25/11 05/25/11 08/04/11

SHEET 47 OF 64

FILE => TBDRWD-m-dmdt01.dgn

USERNAME => s124496 DATE PLOTTED => 01-OCT-2012 TIME PLOTTED => 08:10

DIST	COUNTY	ROUTE	POST MILES TOTAL PROJECT	SHEET No	TOTAL SHEETS
05	SCr	17	6.0/12.6	245	284

REGISTERED CIVIL ENGINEER 8/4/11 DATE

9-24-12
PLANS APPROVAL DATE

REGISTERED PROFESSIONAL ENGINEER T. Dudley No. C039514 Exp. 12/31/11 CIVIL STATE OF CALIFORNIA

The State of California or its officers or agents shall not be responsible for the accuracy or completeness of electronic copies of this plan sheet.

AECOM TECHNICAL SERVICES, INC.
2020 L STREET, SUITE 300
SACRAMENTO, CALIFORNIA 95811

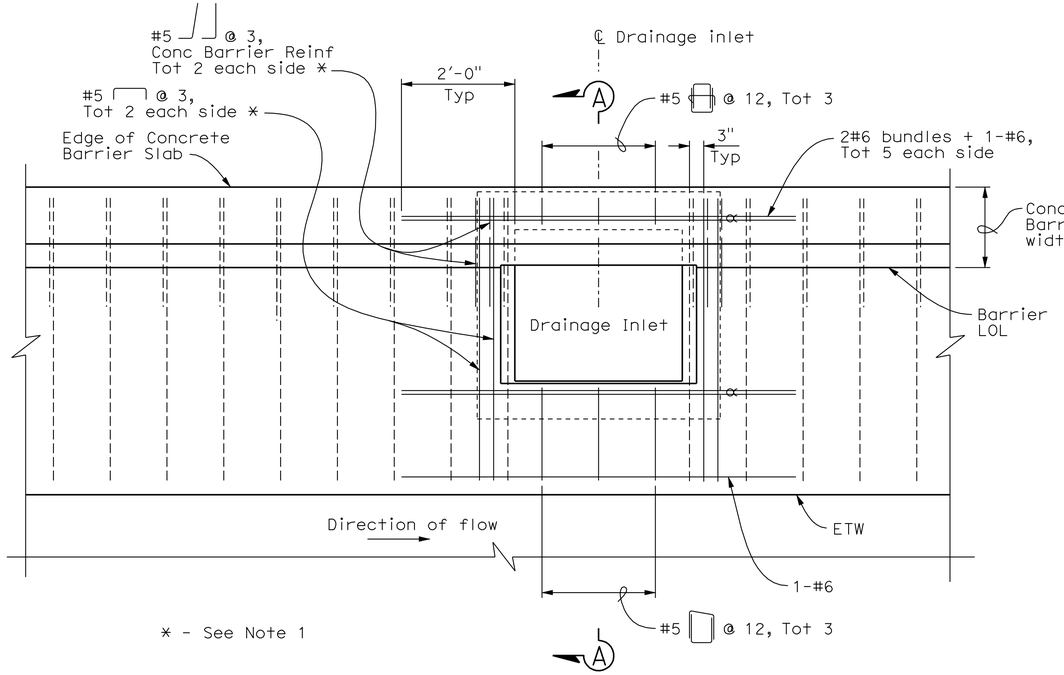

* - See Note 1

PLAN
¾" = 1'-0"

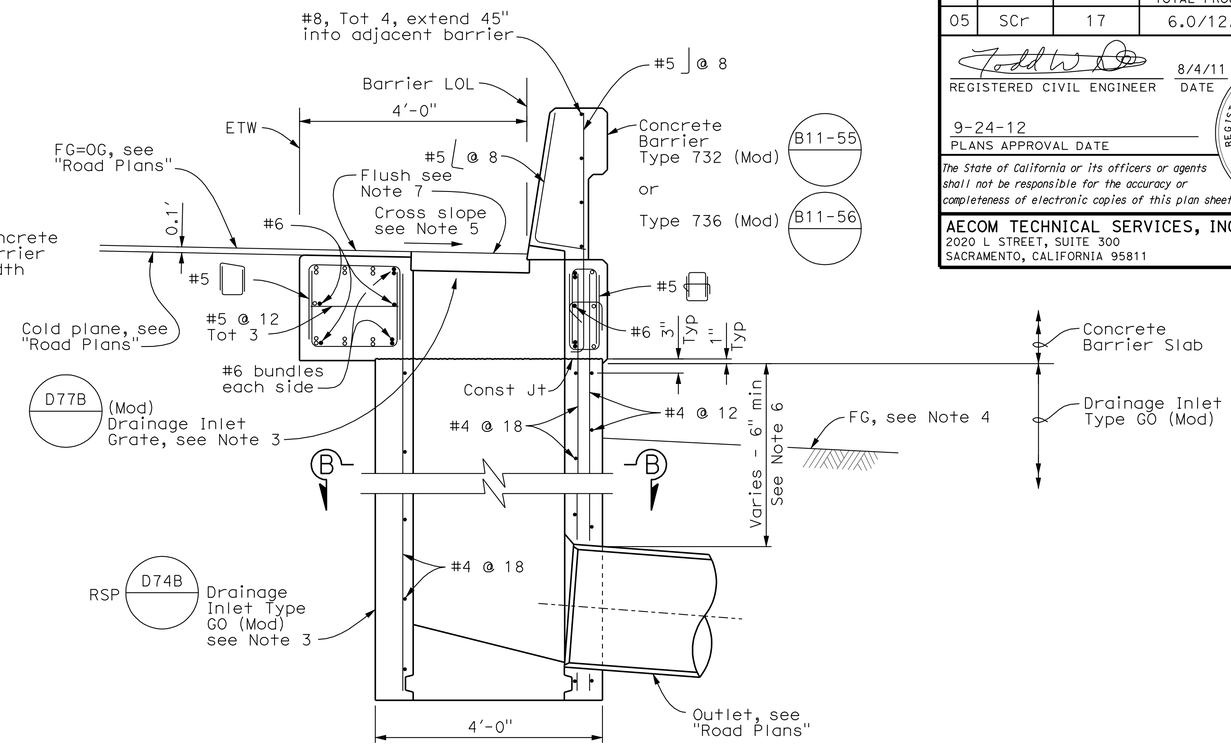

SECTION A-A
¾" = 1'-0"

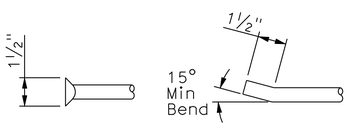

END DETAIL (SIDE VIEW)

STEP NOTES:

1. Steps shall be steel conforming to ASTM A307 and shall be galvanized after fabrication.
2. Step ends may be Type 1 or Type 2 as shown.
3. Steps may be cast in place, or placed in center of 1½"ø Min drilled or formed holes and set with high strength, non-shrink grout, 6000 psi Min.

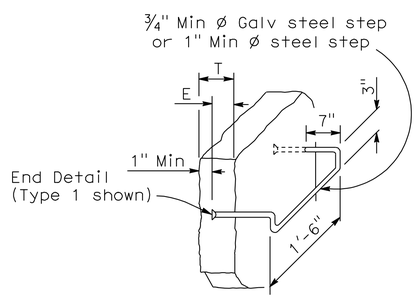

E = 6" or T-1", whichever is less, E = 3" Min

STEEL STEP DETAILS

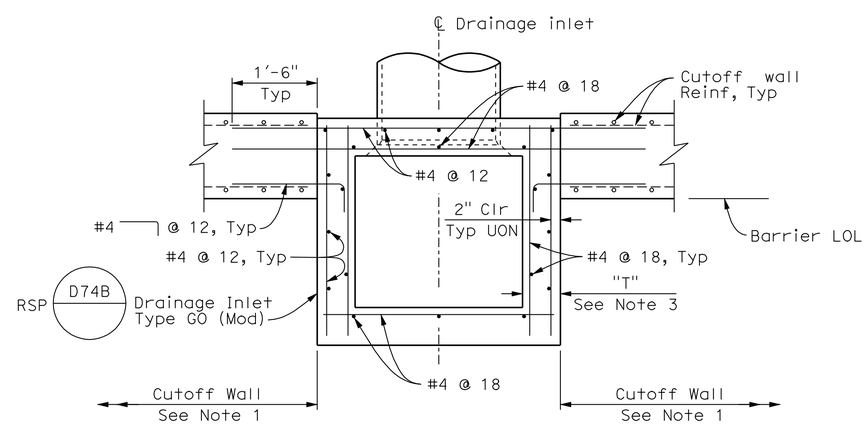

CONCRETE BARRIER SLAB WITH CUTOFF WALL

SECTION B-B
¾" = 1'-0"

LEGEND:

- - - - - Indicates Standard Concrete Barrier Slab Reinf, see Note 1
═══ Bundled bars

NOTES:

1. For Concrete Barrier Slab with Cutoff Wall, see "Details No. 3" sheets.
2. Drainage inlet keys to be cast flush to inside faces of Soldier Pile flanges.
3. For details not shown, refer to Standard Plans.
4. See "Structure Plan" sheets for each retaining wall for approximate FG line.
5. Match existing Cross Slope UON. See "Road Plans" for details.
6. See "Road Plans" for outlet details.
7. Inlet grade shall be installed flush with the FG surface of 0.1' HMA overlay.

Note:
The Contractor shall verify all controlling field dimensions before ordering or fabricating any material.

DESIGN OVERSIGHT Wei An
SIGN OFF DATE

	BY	CHECKED
DESIGN	T. Dudley	R. Price
DETAILS	C. Lee	T. Dudley
QUANTITIES	T. Dudley	E. Nevarez

PREPARED FOR THE STATE OF CALIFORNIA DEPARTMENT OF TRANSPORTATION

Stephen J. Mislinski
PROJECT ENGINEER

BRIDGE NO. Varies
POST MILE Varies

RETAINING WALLS
DRAINAGE INLET DETAILS NO. 2

DESIGN DETAIL SHEET (ENGLISH) (REV. 2/25/05)

ORIGINAL SCALE IN INCHES FOR REDUCED PLANS 0 1 2 3

CU 05
EA 0L7014

DISREGARD PRINTS BEARING EARLIER REVISION DATES 03/25/11 05/25/11 08/04/11

REVISION DATES (PRELIMINARY STAGE ONLY)

SHEET 48 OF 64

FILE => TBDRWD-m-dmdt02.dgn

USERNAME => s124496 DATE PLOTTED => 01-OCT-2012 TIME PLOTTED => 08:10

DIST	COUNTY	ROUTE	POST MILES TOTAL PROJECT	SHEET No	TOTAL SHEETS
05	SCr	17	6.0/12.6	246	284

Robert A. Price 8/4/11
REGISTERED CIVIL ENGINEER DATE

9-24-12
PLANS APPROVAL DATE

REGISTERED PROFESSIONAL ENGINEER Robert A. Price No. C56855 Exp. 06/30/13 CIVIL STATE OF CALIFORNIA

The State of California or its officers or agents shall not be responsible for the accuracy or completeness of electronic copies of this plan sheet.

AECOM TECHNICAL SERVICES, INC.
2020 L STREET, SUITE 300
SACRAMENTO, CALIFORNIA 95811

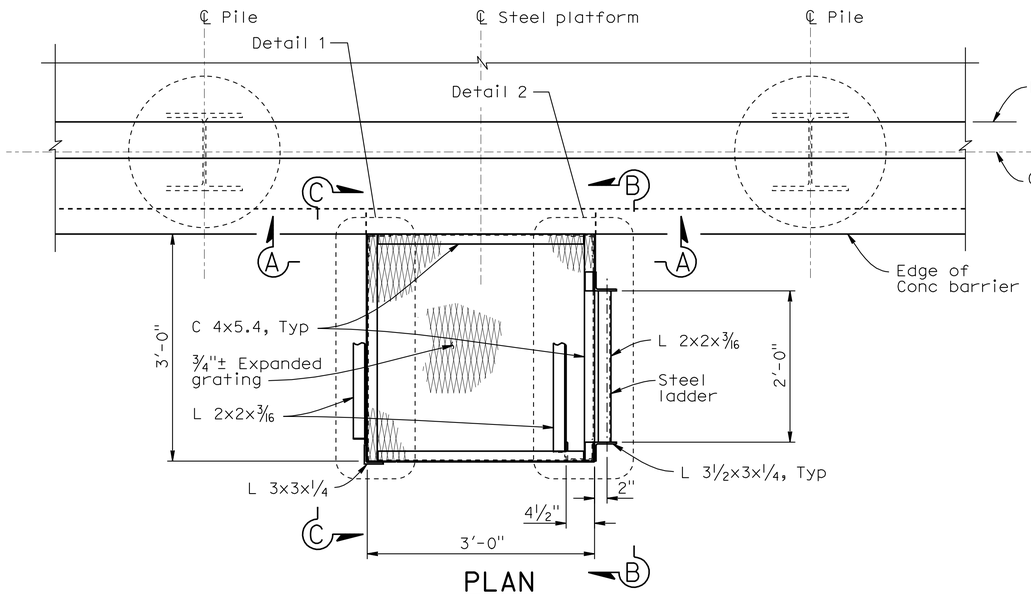

PLAN
1" = 1"-0"

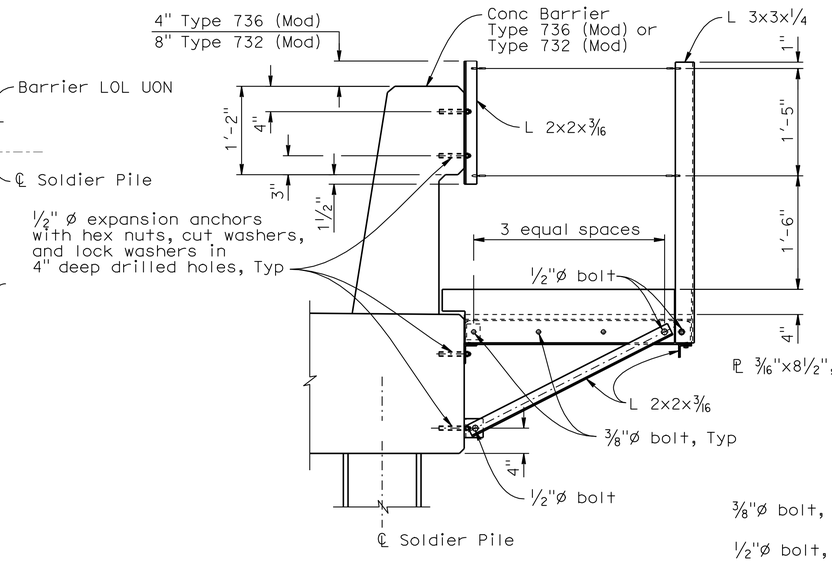

SECTION C-C
1" = 1'-0"

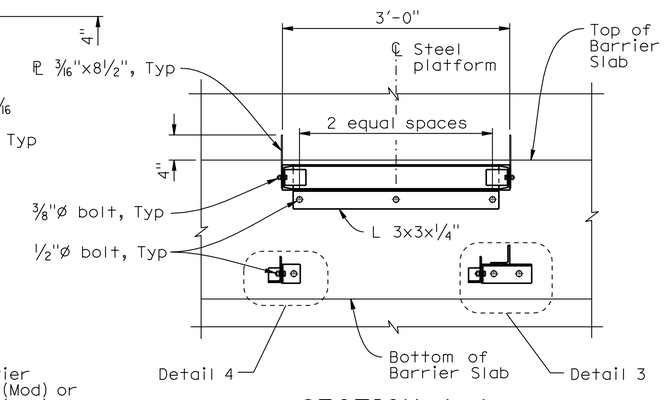

SECTION A-A
1" = 1'-0"

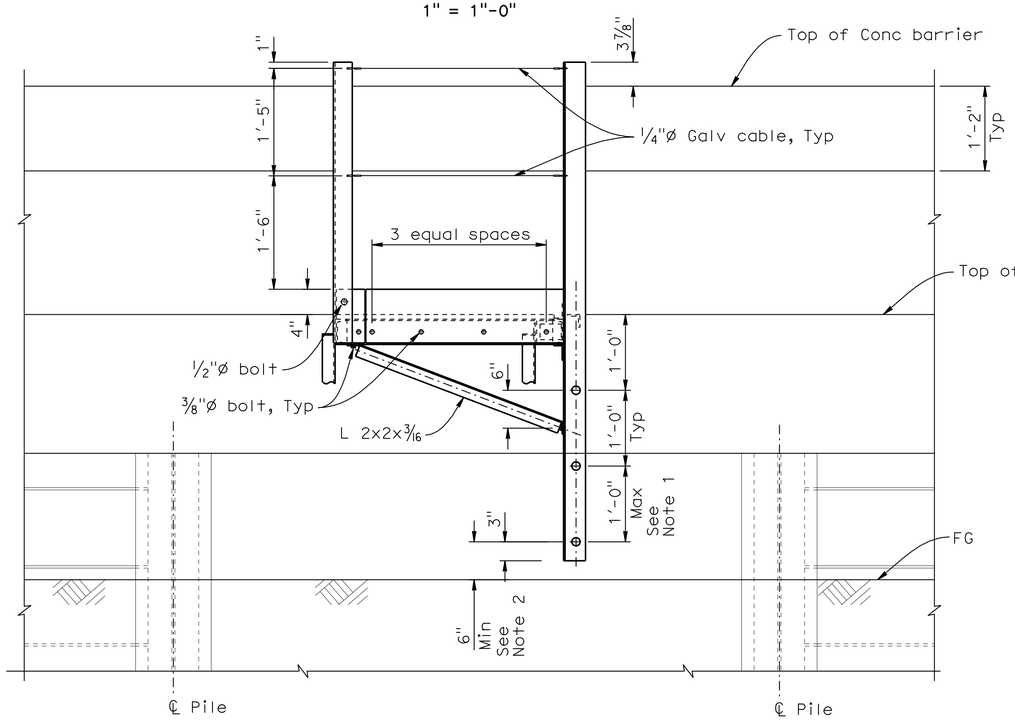

ELEVATION
1" = 1'-0"

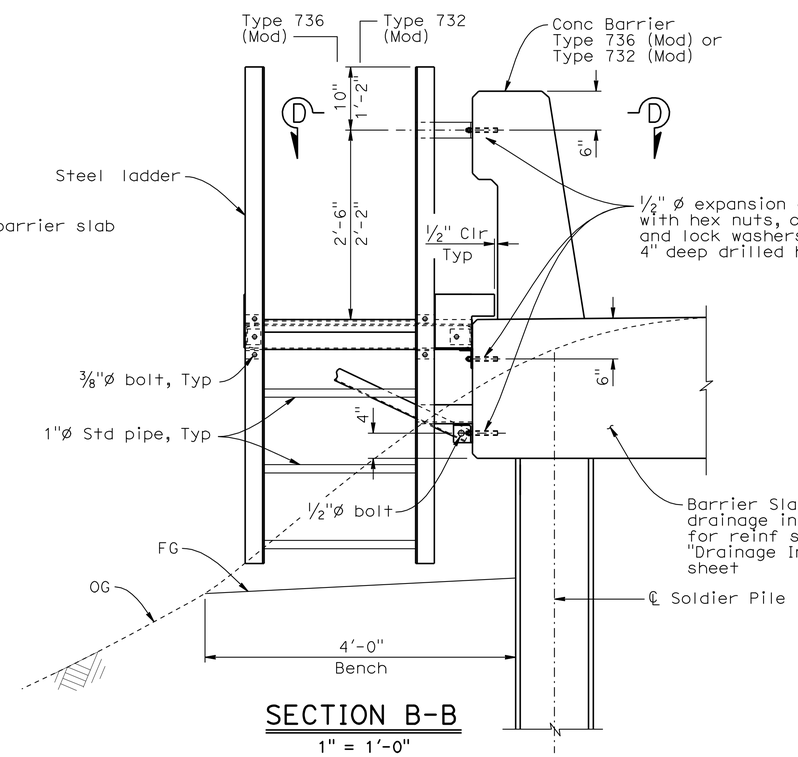

SECTION B-B
1" = 1'-0"

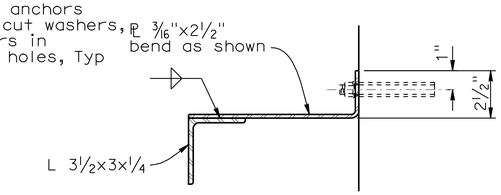

SECTION D-D
3" = 1'-0"

NOTES:

1. Bottom rung spacing shall be no less than 6" and no more than 12" from the next rung.
2. The bottom rung shall be no less than 6" and no more than 12" from FG.
3. For Details 1, 2, 3, and 4, see "Maintenance Platform Details No. 2" sheet.

Note:
The Contractor shall verify all controlling field dimensions before ordering or fabricating any material.

DESIGN OVERSIGHT Wei An	DESIGN	BY R. Price	CHECKED B. Fish
SIGN OFF DATE	DETAILS	BY C. Lee	CHECKED B. Fish
	QUANTITIES	BY M. Stiller	CHECKED S. Desalegn

PREPARED FOR THE STATE OF CALIFORNIA DEPARTMENT OF TRANSPORTATION

Stephen J. Mislinski
PROJECT ENGINEER

BRIDGE NO. Varies
POST MILE Varies

RETAINING WALLS
MAINTENANCE PLATFORM DETAIL NO. 1

DESIGN DETAIL SHEET (ENGLISH) (REV. 2/25/05)

ORIGINAL SCALE IN INCHES FOR REDUCED PLANS 0 1 2 3

CU 05
EA 0L7014

DISREGARD PRINTS BEARING EARLIER REVISION DATES

REVISION DATES (PRELIMINARY STAGE ONLY) 12/01/08 02/04/09 03/16/09 03/16/09 04/23/09 04/23/09 03/25/11 05/25/11 08/04/11

SHEET 49 OF 64

FILE => TBDRWD-n-mp01.dgn

USERNAME => s124436 DATE PLOTTED => 01-OCT-2012 TIME PLOTTED => 08:11

DIST	COUNTY	ROUTE	POST MILES TOTAL PROJECT	SHEET No	TOTAL SHEETS
05	SCr	17	6.0/12.6	247	284

Robert A. Price 8/4/11
REGISTERED CIVIL ENGINEER DATE

9-24-12
PLANS APPROVAL DATE

REGISTERED PROFESSIONAL ENGINEER Robert A. Price No. C56855 Exp. 06/30/13 CIVIL STATE OF CALIFORNIA

The State of California or its officers or agents shall not be responsible for the accuracy or completeness of electronic copies of this plan sheet.

AECOM TECHNICAL SERVICES, INC.
2020 L STREET, SUITE 300
SACRAMENTO, CALIFORNIA 95811

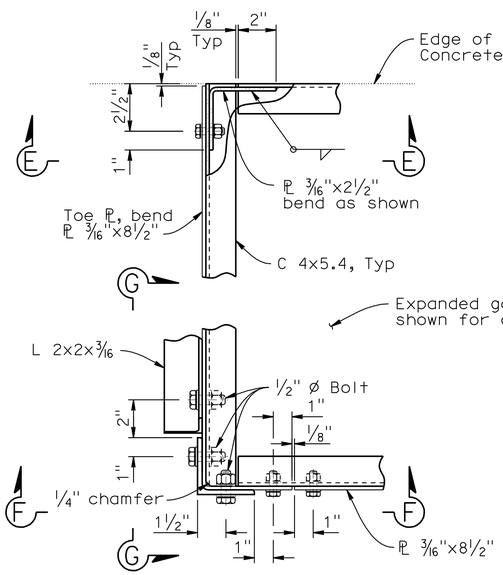

DETAIL 1
3" = 1'-0"

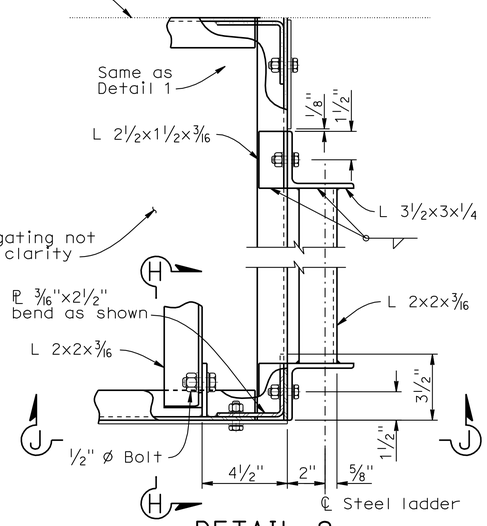

DETAIL 2
3" = 1'-0"

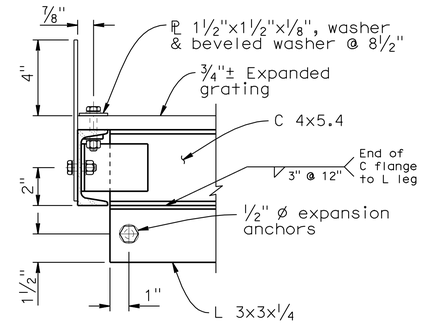

SECTION E-E
3" = 1'-0"

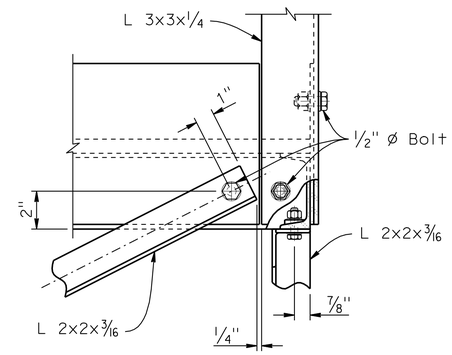

SECTION G-G
3" = 1'-0"

NOTE:

1. All bolts are 3/8"ø unless otherwise stated.

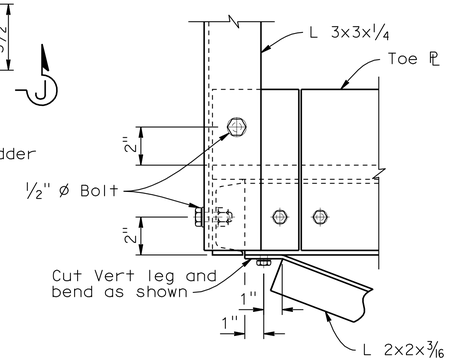

SECTION F-F
3" = 1'-0"

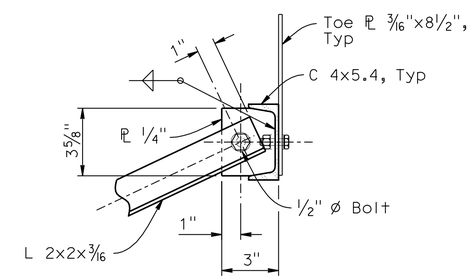

SECTION H-H
3" = 1'-0"

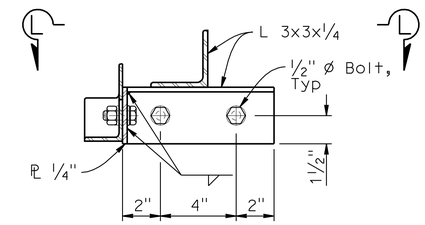

DETAIL 3
3" = 1'-0"

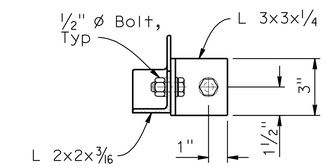

DETAIL 4
3" = 1'-0"

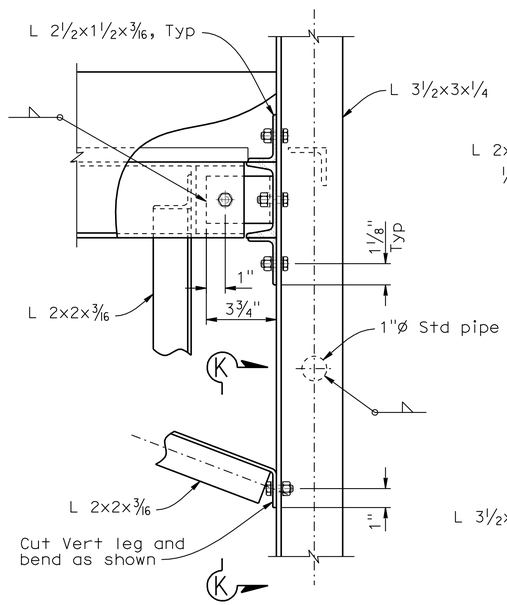

SECTION J-J
3" = 1'-0"

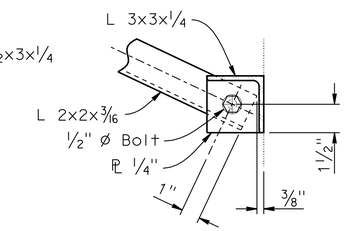

SECTION M-M
3" = 1'-0"

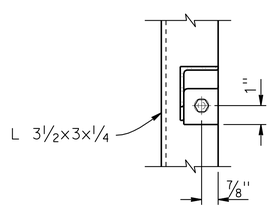

SECTION K-K
3" = 1'-0"

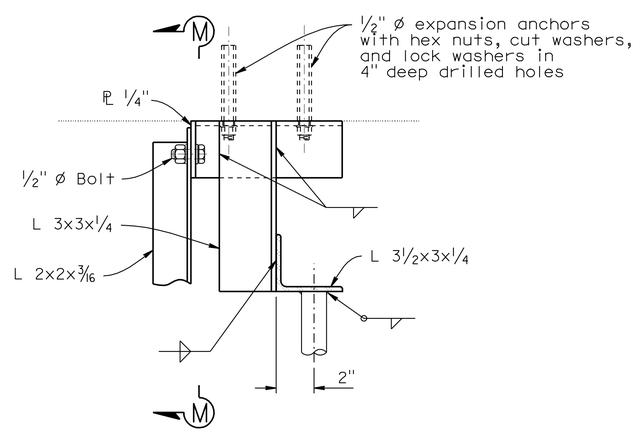

SECTION L-L
3" = 1'-0"

Note:
The Contractor shall verify all controlling field dimensions before ordering or fabricating any material.

DESIGN OVERSIGHT Wel An
SIGN OFF DATE

	BY	CHECKED
DESIGN	R. Price	B. Fish
DETAILS	C. Lee	B. Fish
QUANTITIES	M. Stiller	S. Desalegn

PREPARED FOR THE STATE OF CALIFORNIA DEPARTMENT OF TRANSPORTATION

Stephen J. Mislinski
PROJECT ENGINEER

BRIDGE NO. Varies
POST MILE Varies

RETAINING WALLS
MAINTENANCE PLATFORM DETAIL NO. 2

DESIGN DETAIL SHEET (ENGLISH) (REV. 2/25/05)

ORIGINAL SCALE IN INCHES FOR REDUCED PLANS 0 1 2 3

CU 05
EA 0L7014

DISREGARD PRINTS BEARING EARLIER REVISION DATES

REVISION DATES (PRELIMINARY STAGE ONLY) 12/07/08 02/04/09 03/16/09 03/16/09 04/23/09 03/25/11 05/25/11 08/04/11

SHEET 50 OF 64

FILE => TBDRWD-n-mp02.dgn

USERNAME => s124496 DATE PLOTTED => 01-OCT-2012 TIME PLOTTED => 08:11

DIST	COUNTY	ROUTE	POST MILES TOTAL PROJECT	SHEET No	TOTAL SHEETS
05	SCr	17	6.0/12.6	248	284

REGISTERED CIVIL ENGINEER 8/4/11

9-24-12
PLANS APPROVAL DATE

The State of California or its officers or agents shall not be responsible for the accuracy or completeness of electronic copies of this plan sheet.

REGISTERED PROFESSIONAL ENGINEER Dan Appelbaum No. C50001 Exp. 6-30-13 CIVIL STATE OF CALIFORNIA

This LOTB sheet was prepared in accordance with the Caltrans Soil & Rock Logging, Classification, & Presentation Manual (June 2007).

BENCH MARK

SUHV PM6.0
N = 1850247.897,
E = 6124595.487,
Elev 679.44′ (NAVD88)

SUHV PM6.12
0.32′ Lt of "B1" Line
Sta 105+61.05
N= 1850589.934,
E= 6125201.467,
Elev 700.30′ (NAVD88)

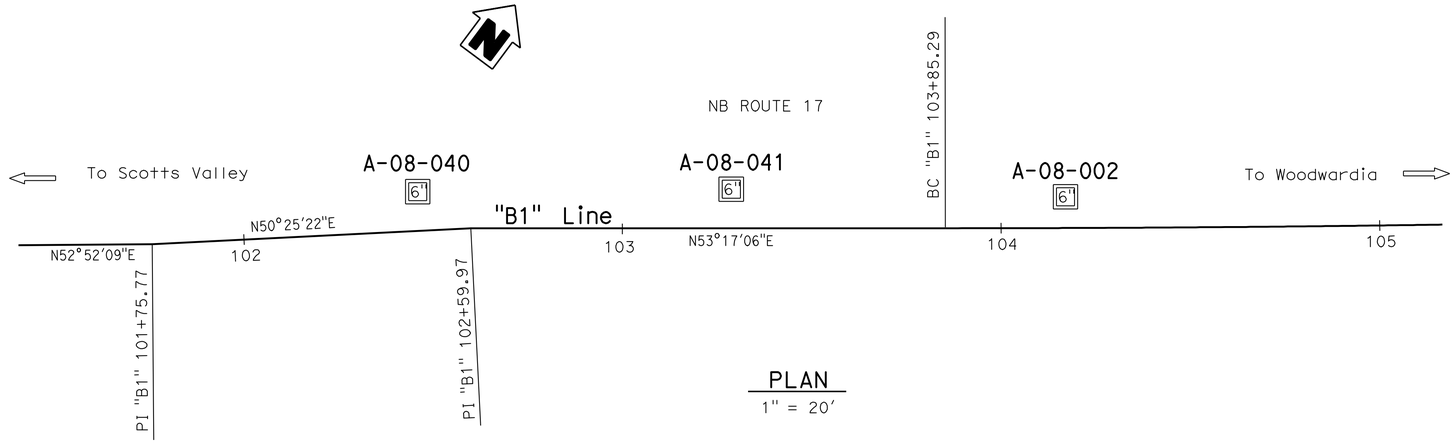

PLAN
1" = 20′

qu= Unconfined compressive strength as determined by pocket penetrometer (tsf).

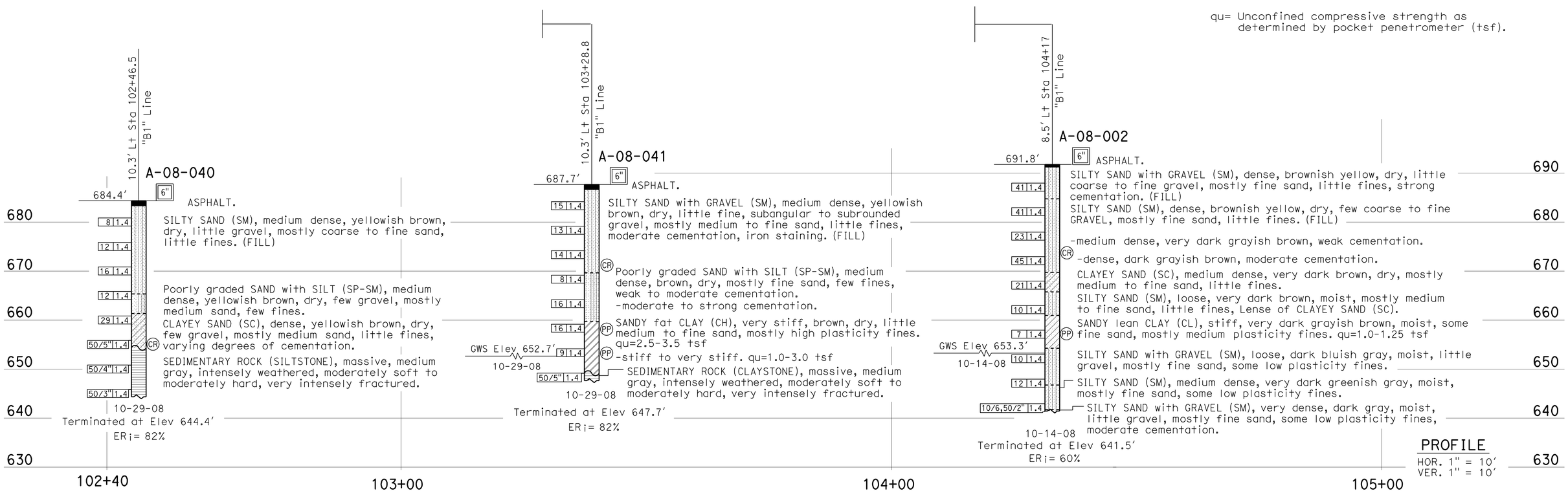

PROFILE
HOR. 1" = 10′
VER. 1" = 10′

ENGINEERING SERVICES	GEOTECHNICAL SERVICES	STATE OF CALIFORNIA DEPARTMENT OF TRANSPORTATION	DIVISION OF ENGINEERING SERVICES STRUCTURE DESIGN DESIGN BRANCH	BRIDGE NO. 36E-0021 POST MILES 6.04	RETAINING WALLS LOTB RW NO. 1
FUNCTIONAL SUPERVISOR NAME: M. Finegan	DRAWN BY: I. G-Remmen, 1/09 CHECKED BY: J. Kimura	FIELD INVESTIGATION BY: R. Turner, Z. Dellamas	CU 05 EA 0L7014		

OGS CIVIL LOG OF TEST BORINGS SHEET

ORIGINAL SCALE IN INCHES FOR REDUCED PLANS 0 1 2 3

DISREGARD PRINTS BEARING EARLIER REVISION DATES → REVISION DATES 02-26-09 03-06-09 03/16/09 04/23/09 03/29/11 05/25/11 08/04/11

SHEET 51 OF 64

FILE => TBDRWD-s-ltb01.dgn

USERNAME => s124496 DATE PLOTTED => 01-OCT-2012 TIME PLOTTED => 08:11

DIST	COUNTY	ROUTE	POST MILES TOTAL PROJECT	SHEET No	TOTAL SHEETS
05	SCr	17	6.0/12.6	249	284

REGISTERED CIVIL ENGINEER 8/4/11

9-24-12
PLANS APPROVAL DATE

REGISTERED PROFESSIONAL ENGINEER Dan Appelbaum No. C50001 Exp. 6-30-13 CIVIL STATE OF CALIFORNIA

The State of California or its officers or agents shall not be responsible for the accuracy or completeness of electronic copies of this plan sheet.

This LOTB sheet was prepared in accordance with the Caltrans Soil & Rock Logging, Classification, & Presentation Manual (June 2007).

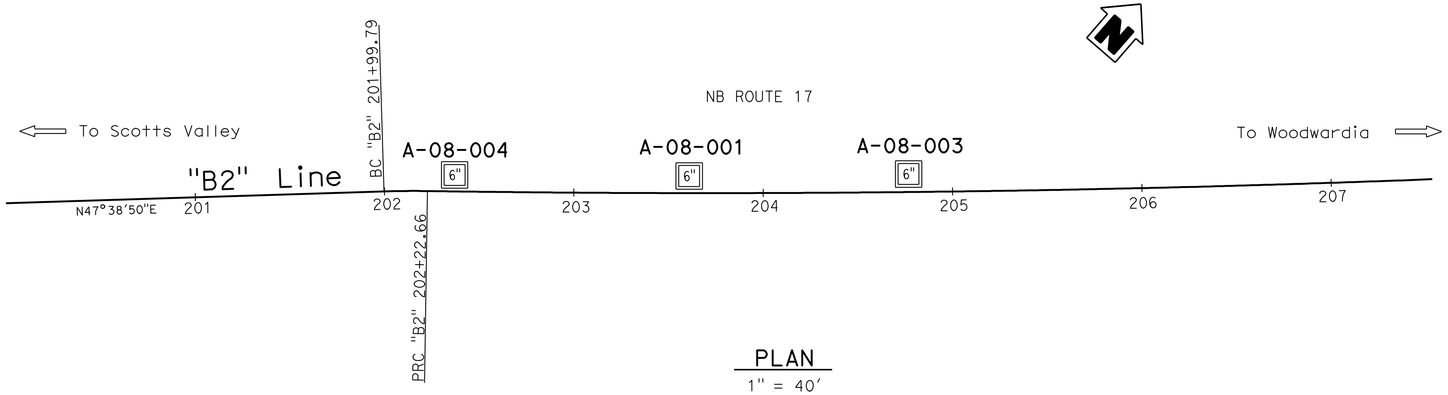

PLAN
1" = 40'

BENCH MARK

PRHV PM6.261
80.88' Lt of "B2" Line
Sta 206+90.49
N= 1851091.583,
E= 6125667.798,
ELEV 737.18' (NAVD88)

SUHV PM6.12
13.33' Lt of "B2" Line
Sta 200+07.66
N= 1850589.9340,
E= 6125201.4670,
ELEV 700.30' (NAVD88)

qu= Unconfined compressive strength as determined by pocket penetrometer (tsf).

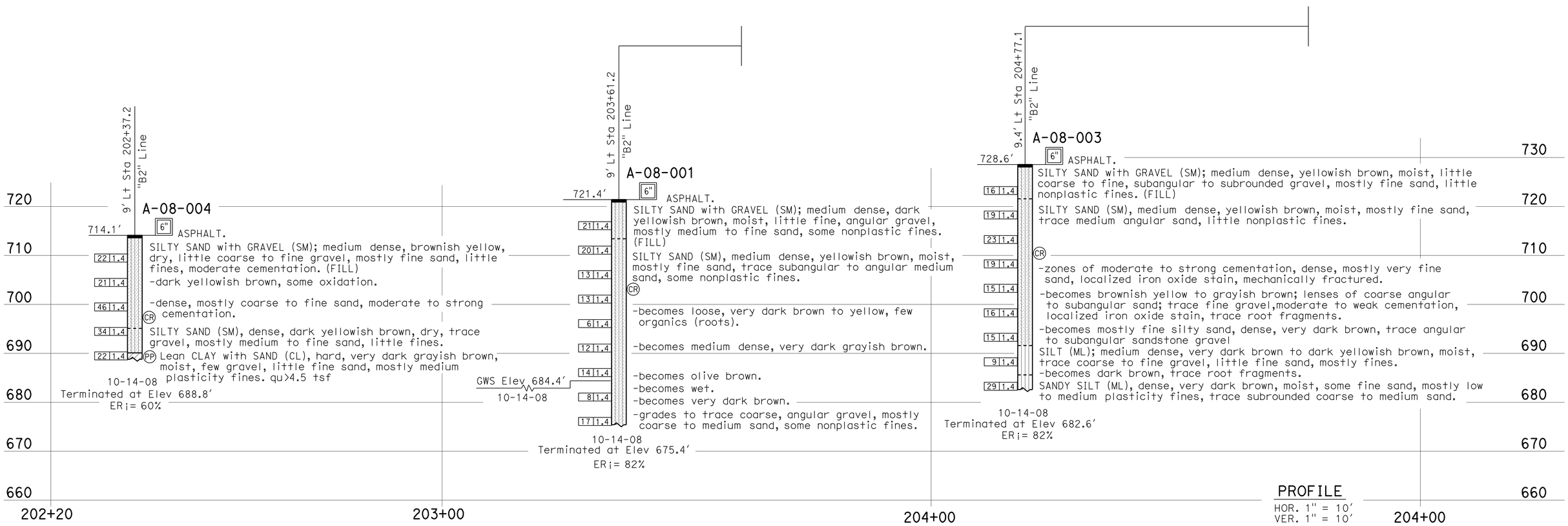

PROFILE
HOR. 1" = 10'
VER. 1" = 10'

ENGINEERING SERVICES	GEOTECHNICAL SERVICES	STATE OF CALIFORNIA DEPARTMENT OF TRANSPORTATION	DIVISION OF ENGINEERING SERVICES STRUCTURE DESIGN DESIGN BRANCH	BRIDGE NO. 36E-0022 POST MILES 6.20	RETAINING WALLS LOTB RW NO. 2
FUNCTIONAL SUPERVISOR NAME: M. Finegan	DRAWN BY: I. G-Remmen, 1/09 CHECKED BY: J. Kimura	FIELD INVESTIGATION BY: Z Dellamas, M Jurasius			

OGS CIVIL LOG OF TEST BORINGS SHEET

ORIGINAL SCALE IN INCHES FOR REDUCED PLANS 0 1 2 3

CU 05
EA 0L7014

DISREGARD PRINTS BEARING EARLIER REVISION DATES

REVISION DATES: 02-25-09 03-05-09 03/16/09 04/23/09 03/28/11 05/25/11 08/04/11

SHEET 52 OF 64

FILE => TBDRWD-s-lftb02.dgn

USERNAME => s124496 DATE PLOTTED => 01-OCT-2012 TIME PLOTTED => 08:11

DIST	COUNTY	ROUTE	POST MILES TOTAL PROJECT	SHEET No	TOTAL SHEETS
05	SCr	17	6.0/12.6	250	284

REGISTERED CIVIL ENGINEER 8/4/11

9-24-12
PLANS APPROVAL DATE

The State of California or its officers or agents shall not be responsible for the accuracy or completeness of electronic copies of this plan sheet.

REGISTERED PROFESSIONAL ENGINEER
Dan Appelbaum
No. C50001
Exp. 6-30-13
CIVIL
STATE OF CALIFORNIA

This LOTB sheet was prepared in accordance with the Caltrans Soil & Rock Logging, Classification, & Presentation Manual (June 2007).

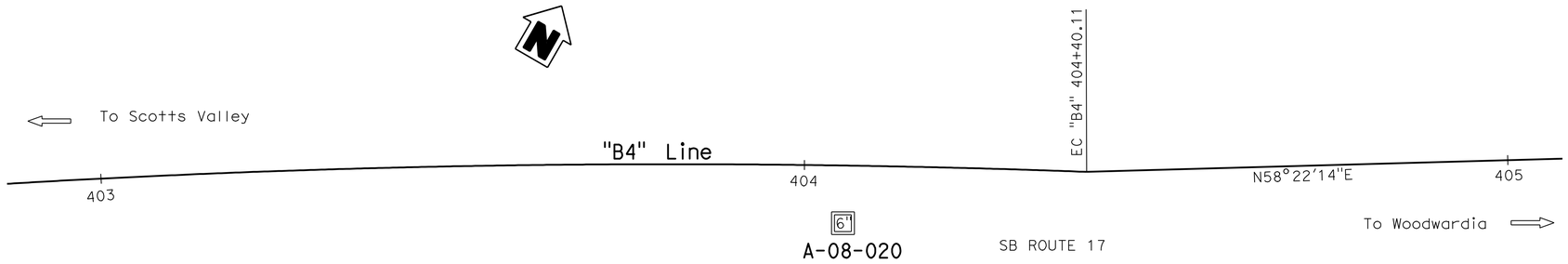

BENCH MARK

SUHV PM6.82
N 1853333.777
E 6127594.211
Elev 919.240' (NAVD88)

SUHV PM6.99
N 1853772.700
E 6128221.332
Elev 962.885' (NAVD88)

PLAN
1" = 10'

Note: No ground water encountered during field investigation.

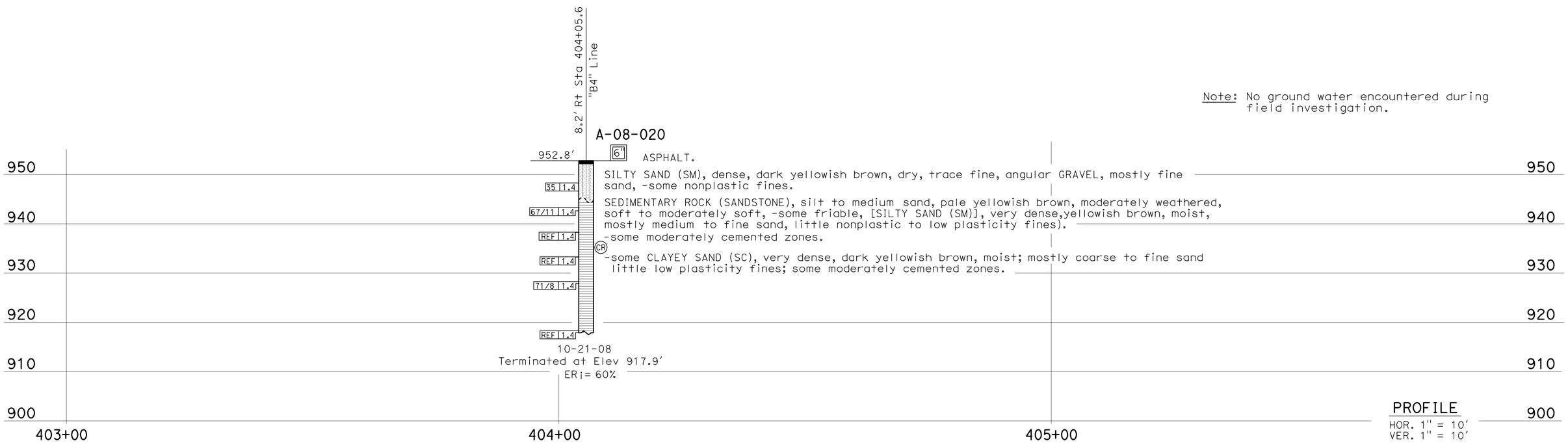

PROFILE
HOR. 1" = 10'
VER. 1" = 10'

ENGINEERING SERVICES	GEOTECHNICAL SERVICES	STATE OF CALIFORNIA DEPARTMENT OF TRANSPORTATION	DIVISION OF ENGINEERING SERVICES STRUCTURE DESIGN DESIGN BRANCH	BRIDGE NO. 36E-0023 POST MILES 6.90	RETAINING WALLS LOTB RW NO. 3
FUNCTIONAL SUPERVISOR NAME: M. Finegan	DRAWN BY: I. G-Remmen, 1/09 CHECKED BY: J. Kimura	FIELD INVESTIGATION BY: W. Hoon			

OGS CIVIL LOG OF TEST BORINGS SHEET

ORIGINAL SCALE IN INCHES FOR REDUCED PLANS 0 1 2 3

CU 05
EA 0L7014

DISREGARD PRINTS BEARING EARLIER REVISION DATES

REVISION DATES: 02-26-09 03-06-09 03/20/09 03/26/09 04/23/09 05/25/11 08/04/11

SHEET 53 OF 64

FILE => TBDRWD-s-ltb03.dgn

USERNAME => s124496 DATE PLOTTED => 01-OCT-2012 TIME PLOTTED => 08:11

DIST	COUNTY	ROUTE	POST MILES TOTAL PROJECT	SHEET No	TOTAL SHEETS
05	SCr	17	6.0/12.6	251	284

REGISTERED CIVIL ENGINEER 8/4/11

9-24-12
PLANS APPROVAL DATE

The State of California or its officers or agents shall not be responsible for the accuracy or completeness of electronic copies of this plan sheet.

REGISTERED PROFESSIONAL ENGINEER
Dan Appelbaum
No. C50001
Exp. 6-30-13
CIVIL
STATE OF CALIFORNIA

This LOTB sheet was prepared in accordance with the Caltrans Soil & Rock Logging, Classification, & Presentation Manual (June 2007).

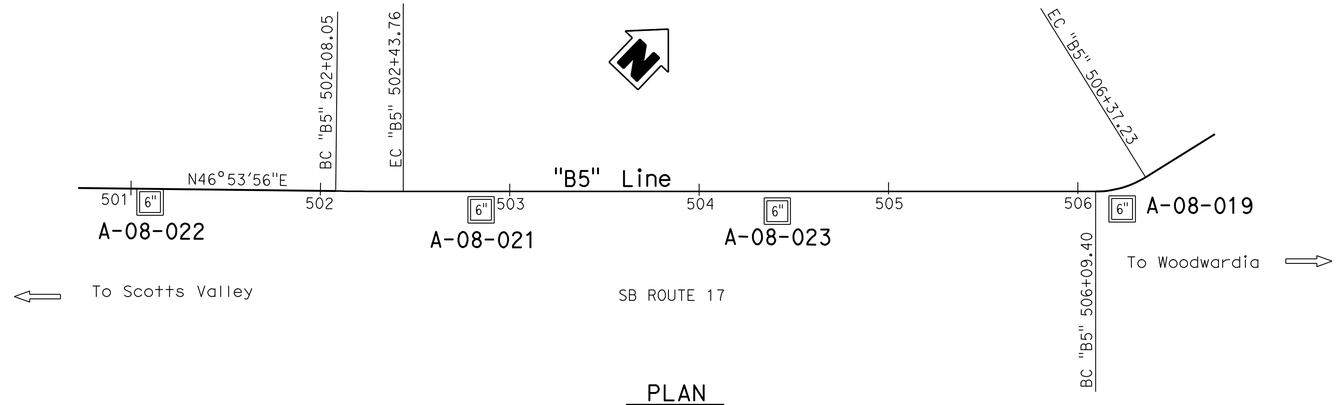

PLAN
1" = 40'

BENCH MARK

PM7.32
5.79' Lt of "B5" Line
Sta 500+85.27
N= 1854379.826
E= 6129757.973
Elev 984.122' (NAVD88)

PM7.43
121.86' Rt of "B5" Line
Sta 506+91.07
N= 1854782.750
E= 6130286.722
Elev 1018.901' (NAVD88)

Note: No ground water encountered during field investigation.

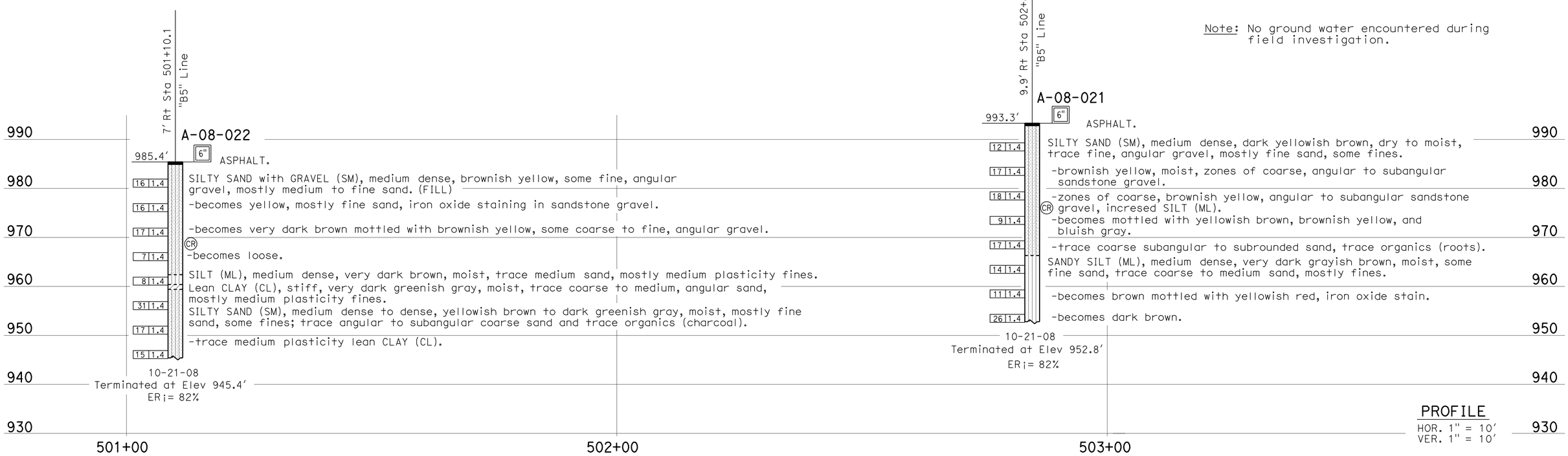

PROFILE
HOR. 1" = 10'
VER. 1" = 10'

ENGINEERING SERVICES		GEOTECHNICAL SERVICES	STATE OF CALIFORNIA DEPARTMENT OF TRANSPORTATION	DIVISION OF ENGINEERING SERVICES STRUCTURE DESIGN DESIGN BRANCH	BRIDGE NO. 36E-0024 POST MILES 7.38	RETAINING WALLS LOTB RW NO. 4, 1 OF 2
FUNCTIONAL SUPERVISOR NAME: M. Finegan	DRAWN BY: I. G-Remmen, 1/09 CHECKED BY: J. Kimura	FIELD INVESTIGATION BY: W. Hoon, M. Jurasius				

OGS CIVIL LOG OF TEST BORINGS SHEET

ORIGINAL SCALE IN INCHES FOR REDUCED PLANS 0 1 2 3

CU 05
EA 0L7014

DISREGARD PRINTS BEARING EARLIER REVISION DATES

REVISION DATES: 02-25-09 03-06-09 03/18/09 04/23/09 03/25/11 05/25/11 08/04/11

SHEET 54 OF 64

FILE => TBDRWD-s-lltb04.dgn

USERNAME => s14640 DATE PLOTTED => 01-OCT-2012 TIME PLOTTED => 08:17

DIST	COUNTY	ROUTE	POST MILES TOTAL PROJECT	SHEET No	TOTAL SHEETS
05	SCr	17	6.0/12.6	252	284

REGISTERED CIVIL ENGINEER 8/4/11

9-24-12
PLANS APPROVAL DATE

REGISTERED PROFESSIONAL ENGINEER
Dan Appelbaum
No. C50001
Exp. 6-30-13
CIVIL
STATE OF CALIFORNIA

The State of California or its officers or agents shall not be responsible for the accuracy or completeness of electronic copies of this plan sheet.

This LOTB sheet was prepared in accordance with the Caltrans Soil & Rock Logging, Classification, & Presentation Manual (June 2007).

FOR PLAN VIEW, SEE
"LOG OF TEST BORINGS" 1 OF 2

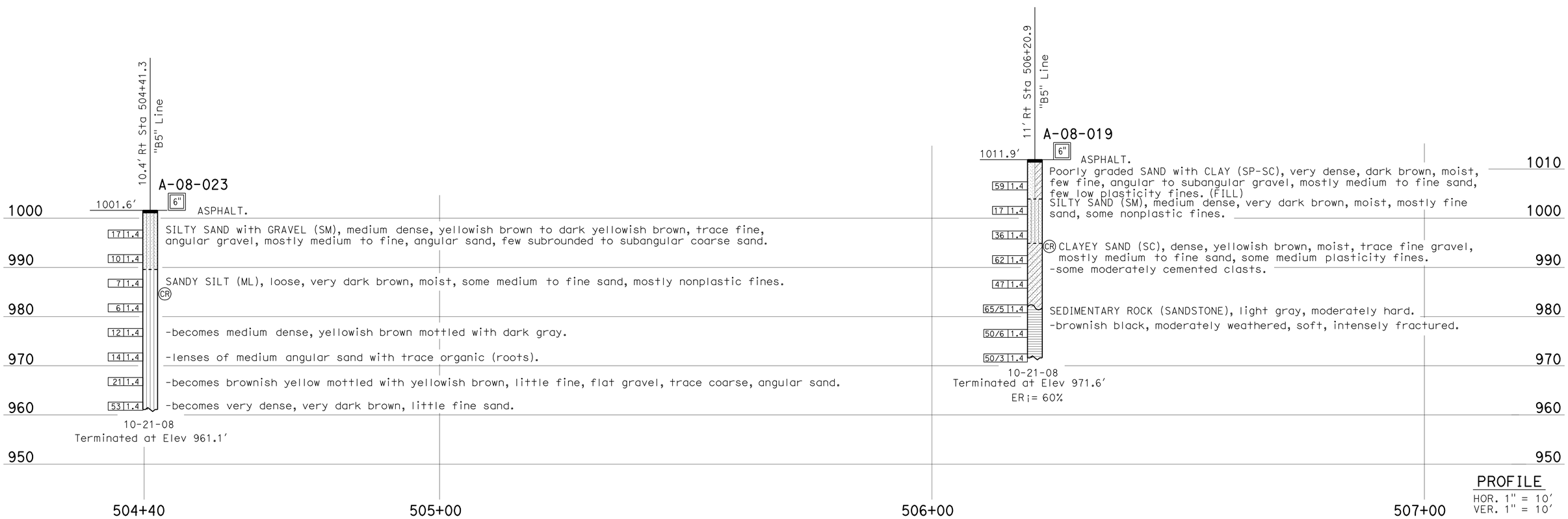

ENGINEERING SERVICES	GEOTECHNICAL SERVICES	STATE OF CALIFORNIA DEPARTMENT OF TRANSPORTATION	DIVISION OF ENGINEERING SERVICES STRUCTURE DESIGN	BRIDGE NO. 36E-0024	RETAINING WALLS
FUNCTIONAL SUPERVISOR	DRAWN BY: I. G-Remmen, 1/09	FIELD INVESTIGATION BY:	DESIGN BRANCH	POST MILES 7.38	LOTB RW NO. 4, 2 OF 2
NAME: M. Finegan	CHECKED BY: J. Kimura	W. Hoon, M. Jurasius			

OGS CIVIL LOG OF TEST BORINGS SHEET

ORIGINAL SCALE IN INCHES FOR REDUCED PLANS 0 1 2 3

CU 05
EA 0L7014

DISREGARD PRINTS BEARING EARLIER REVISION DATES

REVISION DATES: 02-25-09 03-05-09 03/18/09 04/23/09 03/28/11 05/25/11 08/04/11

SHEET 55 OF 64

FILE => TBDRWD-s-ltb05.dgn

USERNAME => s114640 DATE PLOTTED => 01-OCT-2012 TIME PLOTTED => 08:17

DIST	COUNTY	ROUTE	POST MILES TOTAL PROJECT	SHEET No	TOTAL SHEETS
05	SCr	17	6.0/12.6	253	284

REGISTERED CIVIL ENGINEER 8/4/11

9-24-12
PLANS APPROVAL DATE

REGISTERED PROFESSIONAL ENGINEER Dan Appelbaum No. C50001 Exp. 6-30-13 CIVIL STATE OF CALIFORNIA

The State of California or its officers or agents shall not be responsible for the accuracy or completeness of electronic copies of this plan sheet.

This LOTB sheet was prepared in accordance with the Caltrans Soil & Rock Logging, Classification, & Presentation Manual (June 2007).

BENCH MARK

PM8.71
N = 1860610,
E = 6131133
Elev 1272.638′ (NAVD88)

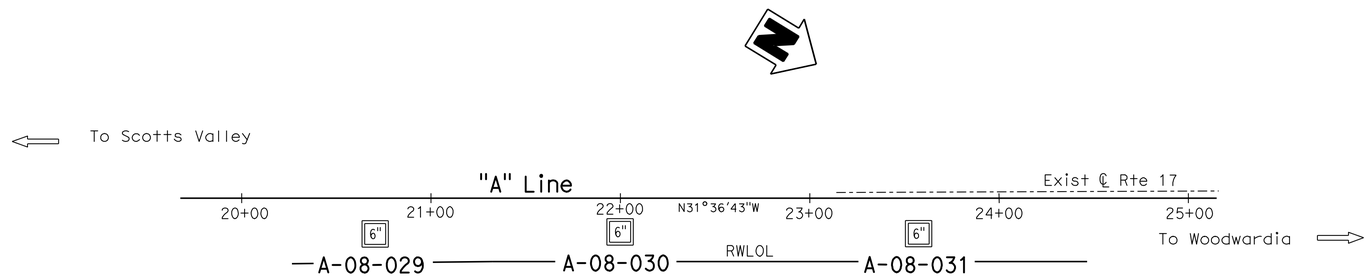

PLAN

1" = 40′

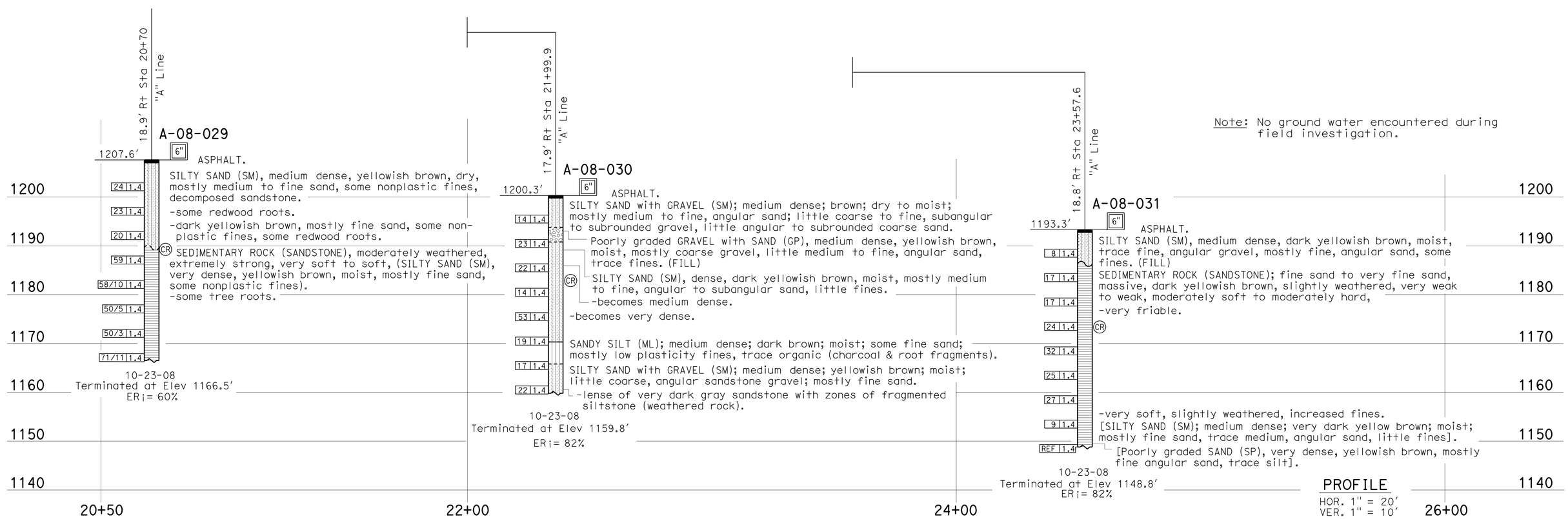

Note: No ground water encountered during field investigation.

PROFILE

HOR. 1" = 20′
VER. 1" = 10′

ENGINEERING SERVICES	GEOTECHNICAL SERVICES	STATE OF CALIFORNIA DEPARTMENT OF TRANSPORTATION	DIVISION OF ENGINEERING SERVICES STRUCTURE DESIGN DESIGN BRANCH	BRIDGE NO. 36E-0025 POST MILES 8.90	RETAINING WALLS LOTB RW NO. 6
FUNCTIONAL SUPERVISOR NAME: M. Finegan	DRAWN BY: I. G-Remmen, 1/09 CHECKED BY: J. Kimura	FIELD INVESTIGATION BY: W. Hoon, M. Jurasius			

OGS CIVIL LOG OF TEST BORINGS SHEET

ORIGINAL SCALE IN INCHES FOR REDUCED PLANS 0 1 2 3

CU 05
EA 0L7014

DISREGARD PRINTS BEARING EARLIER REVISION DATES

REVISION DATES: 02-25-09 03-06-09 03/18/09 04/23/09 03/25/11 05/25/11 08/04/11

SHEET 56 OF 64

FILE => TBDRWD-s-lltb06.dgn

USERNAME => s14640 DATE PLOTTED => 01-OCT-2012 TIME PLOTTED => 08:17

DIST	COUNTY	ROUTE	POST MILES TOTAL PROJECT	SHEET No	TOTAL SHEETS
05	SCr	17	6.0/12.6	254	284

REGISTERED CIVIL ENGINEER 8/4/11

9-24-12
PLANS APPROVAL DATE

The State of California or its officers or agents shall not be responsible for the accuracy or completeness of electronic copies of this plan sheet.

REGISTERED PROFESSIONAL ENGINEER
Dan Appelbaum
No. C50001
Exp. 6-30-13
CIVIL
STATE OF CALIFORNIA

This LOTB sheet was prepared in accordance with the Caltrans Soil & Rock Logging, Classification, & Presentation Manual (June 2007).

BENCH MARK

SUHV PM9.05
N 1862292.493
E 6130976.632
Elev 1186.467′ (NAVD88)

PRHV PM 9.15
2.47′ Lt of "B15" Line
Sta 1505+04.40,
N 1862750.897
E 6130756.311
Elev 1204.003′ (NAVD88)

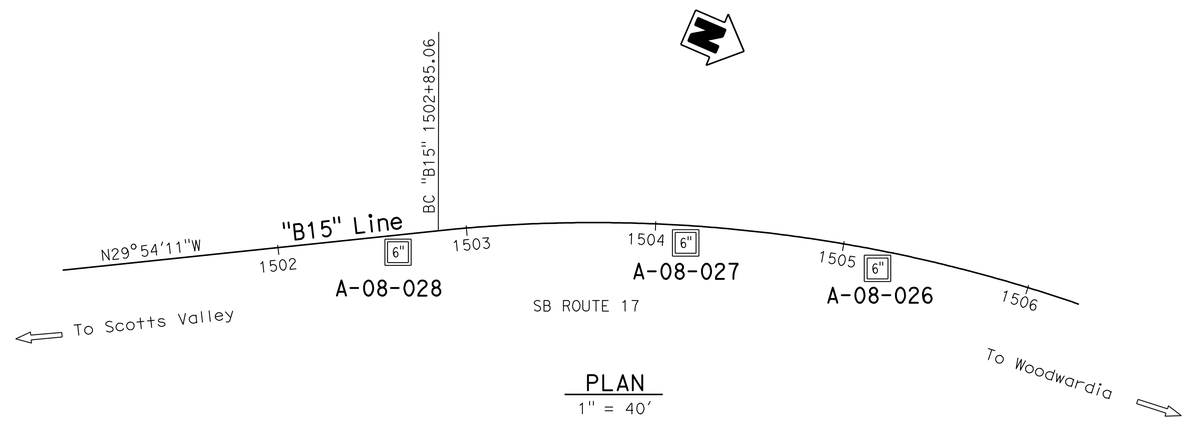

PLAN
1" = 40′

Note: No ground water encountered during field investigation.

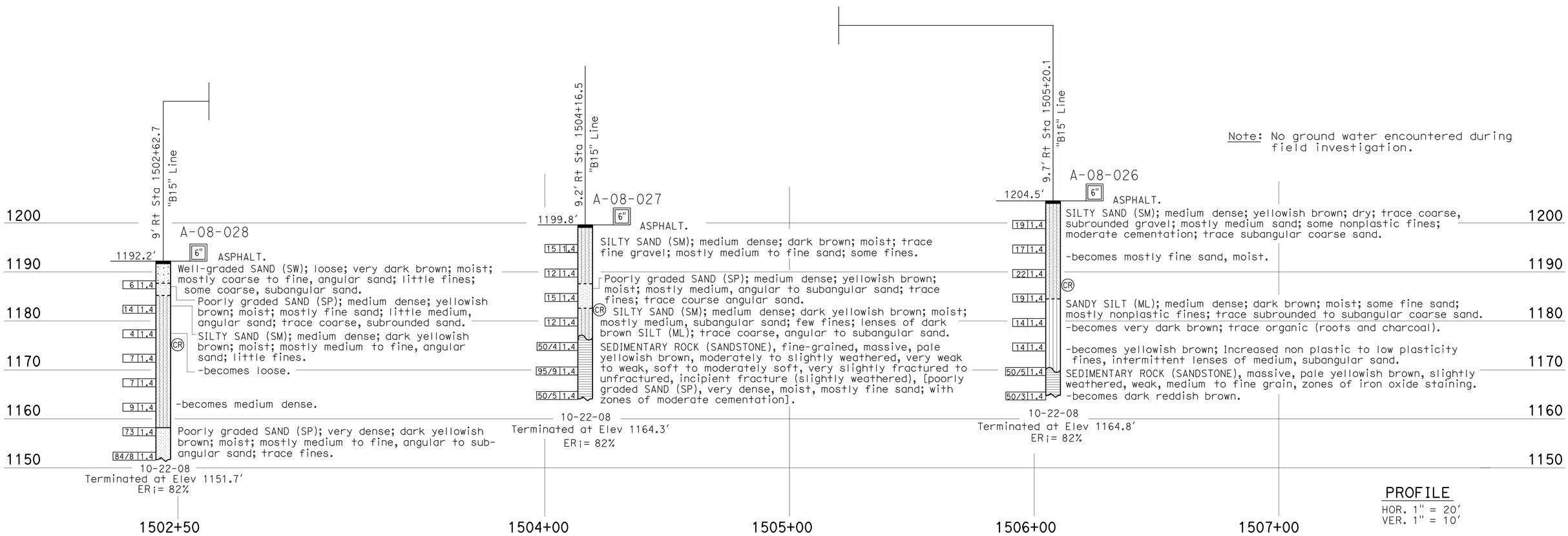

PROFILE
HOR. 1" = 20′
VER. 1" = 10′

ENGINEERING SERVICES	GEOTECHNICAL SERVICES	STATE OF CALIFORNIA DEPARTMENT OF TRANSPORTATION	DIVISION OF ENGINEERING SERVICES STRUCTURE DESIGN DESIGN BRANCH	BRIDGE NO. 36E-0026 POST MILES 9.11	RETAINING WALLS LOTB RW NO. 7
FUNCTIONAL SUPERVISOR NAME: M. Finegan	DRAWN BY: I. G-Remmen, 1/09 CHECKED BY: J. Kimura	FIELD INVESTIGATION BY: M. Jurasius	CU 05 EA 0L7014		

OGS CIVIL LOG OF TEST BORINGS SHEET

ORIGINAL SCALE IN INCHES FOR REDUCED PLANS 0 1 2 3

DISREGARD PRINTS BEARING EARLIER REVISION DATES

REVISION DATES: 02-26-09 03-06-09 03/18/09 04/23/09 03/28/11 05/26/11 08/04/11

SHEET 57 OF 64

FILE => TBDRWD-s-ltb07.dgn

USERNAME => s114640 DATE PLOTTED => 01-OCT-2012 TIME PLOTTED => 08:17

DIST	COUNTY	ROUTE	POST MILES TOTAL PROJECT	SHEET No	TOTAL SHEETS
05	SCr	17	6.0/12.6	255	284

REGISTERED CIVIL ENGINEER 8/4/11

9-24-12
PLANS APPROVAL DATE

REGISTERED PROFESSIONAL ENGINEER Dan Appelbaum No. C50001 Exp. 6-30-13 CIVIL STATE OF CALIFORNIA

The State of California or its officers or agents shall not be responsible for the accuracy or completeness of electronic copies of this plan sheet.

This LOTB sheet was prepared in accordance with the Caltrans Soil & Rock Logging, Classification, & Presentation Manual (June 2007).

BENCH MARK

PRHV PM9.15
2.47′ Lt of "B15" Line
Sta 1505+04.40
N 1862750.897
E 6130756.311
Elev 1204.003′ (NAVD88)

PRHV PM 9.21
3.07′ Lt of "B15" Line
Sta 1508+30.11
N 1863074.735
E 6130743.949
Elev 1214.099′ (NAVD88)

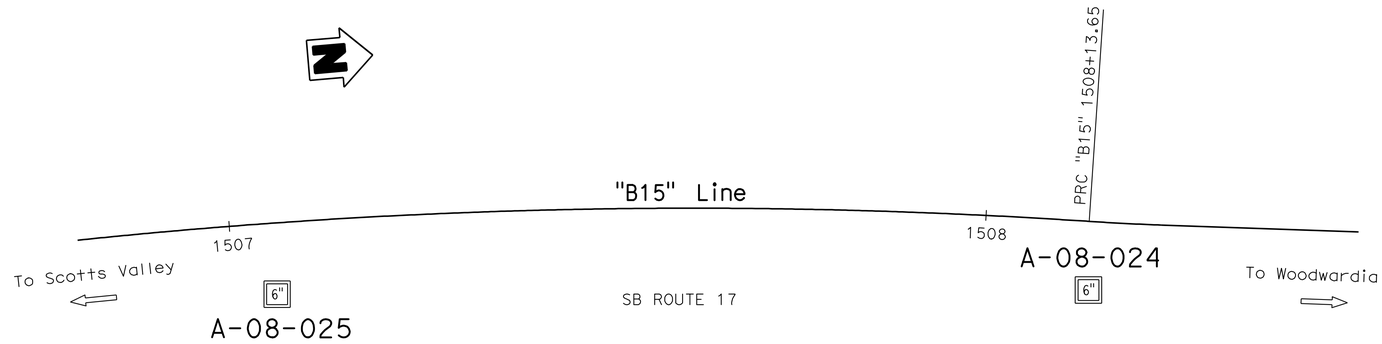

PLAN
1" = 10′

Note: No ground water encountered during field investigation.

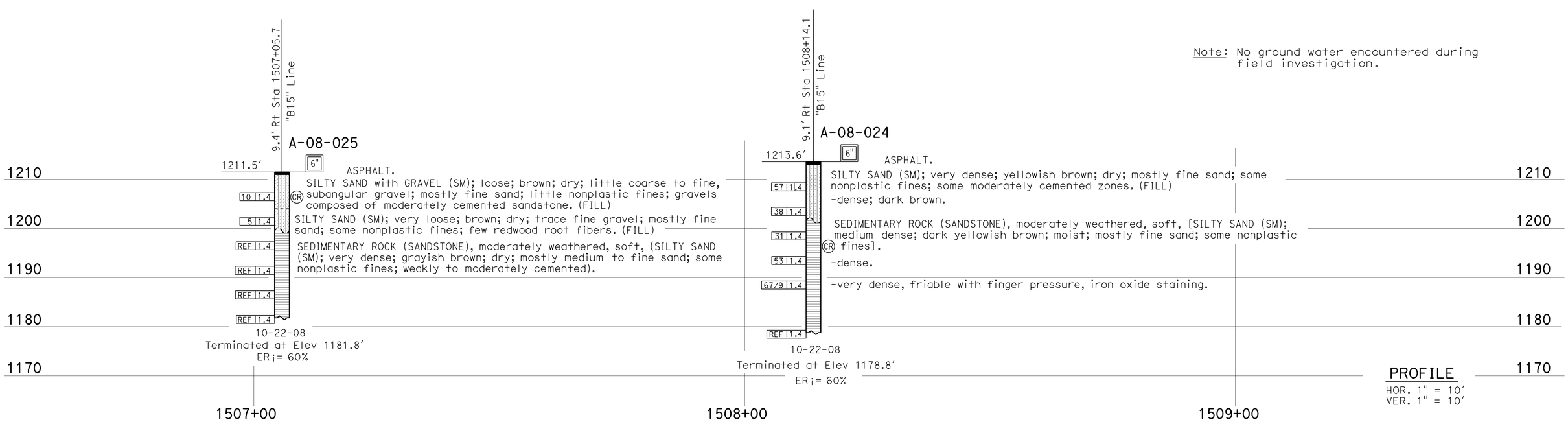

PROFILE
HOR. 1" = 10′
VER. 1" = 10′

ENGINEERING SERVICES	GEOTECHNICAL SERVICES	STATE OF CALIFORNIA DEPARTMENT OF TRANSPORTATION	DIVISION OF ENGINEERING SERVICES STRUCTURE DESIGN DESIGN BRANCH	BRIDGE NO. 36E-0027 POST MILES 9.26	RETAINING WALLS LOTB RW NO. 8
FUNCTIONAL SUPERVISOR NAME: M. Finegan	DRAWN BY: I. G-Remmen, 1/09 CHECKED BY: J. Kimura	FIELD INVESTIGATION BY: W. Hoon			

OGS CIVIL LOG OF TEST BORINGS SHEET

ORIGINAL SCALE IN INCHES FOR REDUCED PLANS 0 1 2 3

CU 05
EA 0L7014

DISREGARD PRINTS BEARING EARLIER REVISION DATES

REVISION DATES: 02-26-09 03-06-09 03/18/09 04/23/09 03/28/11 05/25/11 08/04/11

SHEET 58 OF 64

FILE => TBDRWD-s-ltb08.dgn

USERNAME => s114640 DATE PLOTTED => 01-OCT-2012 TIME PLOTTED => 08:18

DIST	COUNTY	ROUTE	POST MILES TOTAL PROJECT	SHEET No	TOTAL SHEETS
05	SCr	17	6.0/12.6	256	284

REGISTERED CIVIL ENGINEER 8/4/11

9-24-12
PLANS APPROVAL DATE

The State of California or its officers or agents shall not be responsible for the accuracy or completeness of electronic copies of this plan sheet.

REGISTERED PROFESSIONAL ENGINEER Dan Appelbaum No. C50001 Exp. 6-30-13 CIVIL STATE OF CALIFORNIA

This LOTB sheet was prepared in accordance with the Caltrans Soil & Rock Logging, Classification, & Presentation Manual (June 2007).

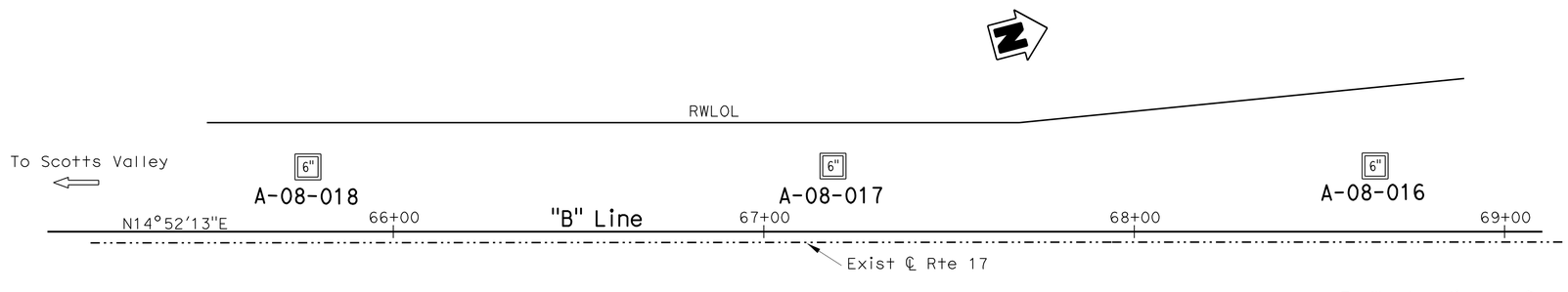

BENCH MARK

PM9.541
N = 1864291
E = 6131687
Elev 1218.925′ (NAVD88)

PM10.17
N = 1867244,
E = 6131782
Elev 1391.342′ (NAVD88)

PLAN

1" = 20′

Note: No ground water encountered during field investigation.

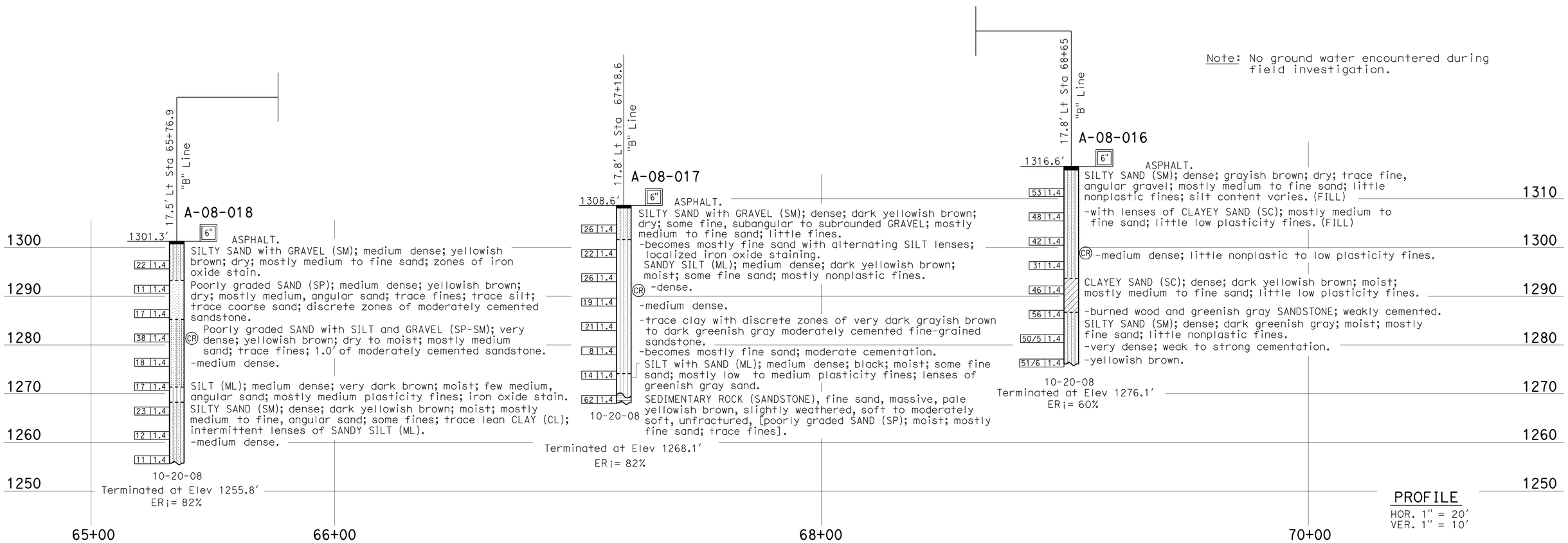

PROFILE

HOR. 1" = 20′
VER. 1" = 10′

ENGINEERING SERVICES	GEOTECHNICAL SERVICES	STATE OF CALIFORNIA DEPARTMENT OF TRANSPORTATION	DIVISION OF ENGINEERING SERVICES STRUCTURE DESIGN	BRIDGE NO. 36E-0028	RETAINING WALLS
FUNCTIONAL SUPERVISOR	DRAWN BY: I. G-Remmen, 1/09	FIELD INVESTIGATION BY:	DESIGN BRANCH	POST MILES 9.7	LOTB RW NO. 9
NAME: M. Finegan	CHECKED BY: J. Kimura	W. Hoon, M. Jurasius			

OGS CIVIL LOG OF TEST BORINGS SHEET

ORIGINAL SCALE IN INCHES FOR REDUCED PLANS 0 1 2 3

CU 05
EA 0L7014

DISREGARD PRINTS BEARING EARLIER REVISION DATES

REVISION DATES: 02-25-09 03-06-09 03/16/09 04/23/09 03/28/11 05/25/11 08/04/11

SHEET 59 OF 64

FILE => TBDRWD-s-ltb09.dgn

USERNAME => s114640 DATE PLOTTED => 01-OCT-2012 TIME PLOTTED => 08:18

DIST	COUNTY	ROUTE	POST MILES TOTAL PROJECT	SHEET No	TOTAL SHEETS
05	SCr	17	6.0/12.6	257	284

REGISTERED CIVIL ENGINEER 8/4/11

9-24-12
PLANS APPROVAL DATE

The State of California or its officers or agents shall not be responsible for the accuracy or completeness of electronic copies of this plan sheet.

REGISTERED PROFESSIONAL ENGINEER Dan Appelbaum No. C50001 Exp. 6-30-13 CIVIL STATE OF CALIFORNIA

This LOTB sheet was prepared in accordance with the Caltrans Soil & Rock Logging, Classification, & Presentation Manual (June 2007).

BENCH MARK

PRHV PM10.55
0.43′ Rt of "B19/21" Line
Sta 1900+16.98
N= 1869081.311
E= 6131583.990
Elev 1481.119′ (NAVD88)

PRHV PM10.80
5.87′ Rt of "B19/21" Line
Sta 1909+02.19
N= 1869884.033
E= 6131452.891
Elev 1505.643′ (NAVD88)

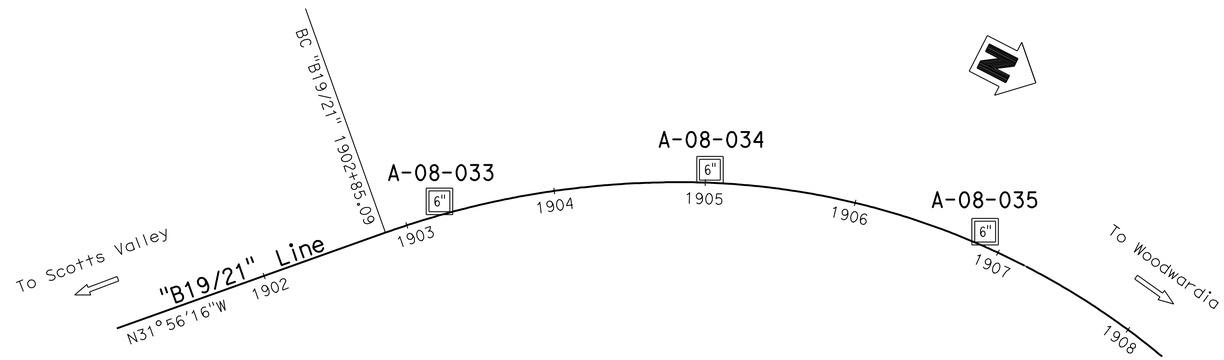

PLAN

1" = 50′

Notes:

1. No ground water encountered during field investigation.
2. qu= Unconfined compressive strength as determined by pocket penetrometer (tsf).

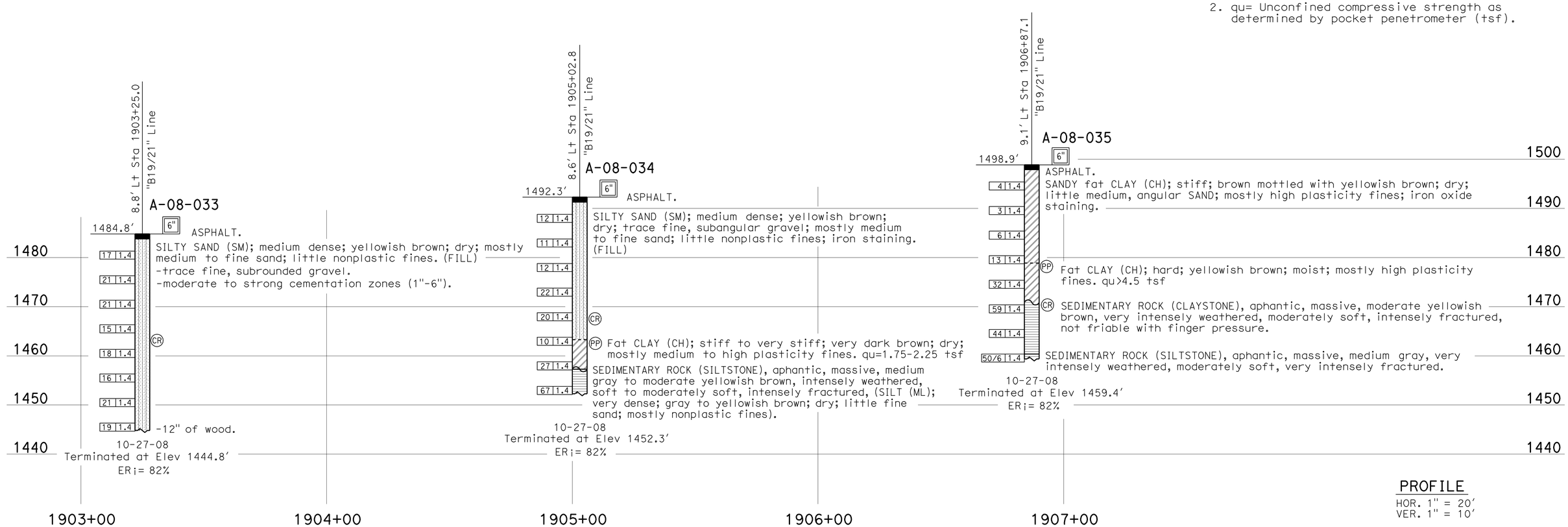

PROFILE

HOR. 1" = 20′
VER. 1" = 10′

ENGINEERING SERVICES	GEOTECHNICAL SERVICES	STATE OF CALIFORNIA DEPARTMENT OF TRANSPORTATION	DIVISION OF ENGINEERING SERVICES STRUCTURE DESIGN DESIGN BRANCH	BRIDGE NO. 36E-0029 POST MILES 10.54	RETAINING WALLS LOTB RW NO. 10
FUNCTIONAL SUPERVISOR NAME: M. Finegan	DRAWN BY: I. G-Remmen, 1/09 CHECKED BY: J. Kimura	FIELD INVESTIGATION BY: R. Turner			

OGS CIVIL LOG OF TEST BORINGS SHEET

ORIGINAL SCALE IN INCHES FOR REDUCED PLANS 0 1 2 3

CU 05
EA 0L7014

DISREGARD PRINTS BEARING EARLIER REVISION DATES

REVISION DATES: 02-25-09 03-06-09 03/26/09 04/23/09 03/25/11 05/25/11 08/04/11

SHEET 60 OF 64

FILE => TBDRWD-s-ltb10.dgn

USERNAME => s114640 DATE PLOTTED => 01-OCT-2012 TIME PLOTTED => 08:18

DIST	COUNTY	ROUTE	POST MILES TOTAL PROJECT	SHEET No	TOTAL SHEETS
05	SCr	17	6.0/12.6	258	284

REGISTERED CIVIL ENGINEER 8/4/11

9-24-12
PLANS APPROVAL DATE

REGISTERED PROFESSIONAL ENGINEER
Dan Appelbaum
No. C50001
Exp. 6-30-13
CIVIL
STATE OF CALIFORNIA

The State of California or its officers or agents shall not be responsible for the accuracy or completeness of electronic copies of this plan sheet.

This LOTB sheet was prepared in accordance with the Caltrans Soil & Rock Logging, Classification, & Presentation Manual (June 2007).

BENCH MARK

PRHV PM10.80
5.87' Rt of "B19/21" Line
Sta 1909+02.70
N= 1869884.033
E= 6131452.891
Elev 1505.643' (NAVD88)

PRHV PM10.89
N= 1870264.375
E= 6132105.500
Elev 1547.448' (NAVD88)

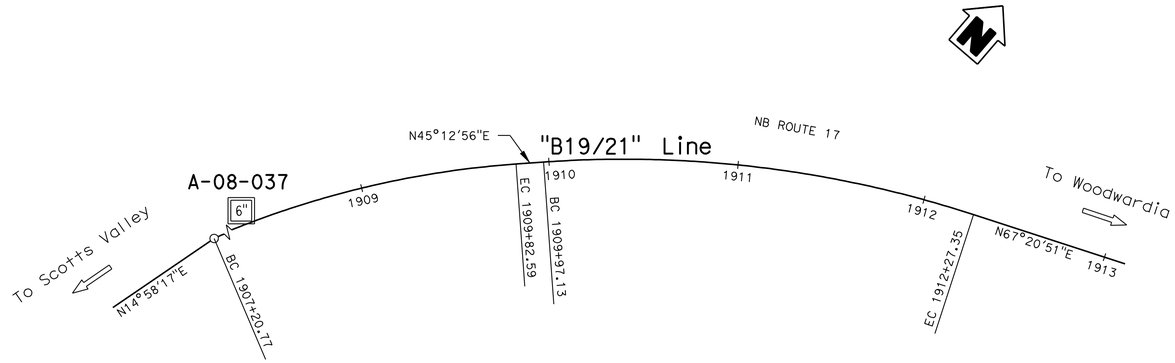

PLAN

1" = 40'

Note: No ground water encountered during field investigation.

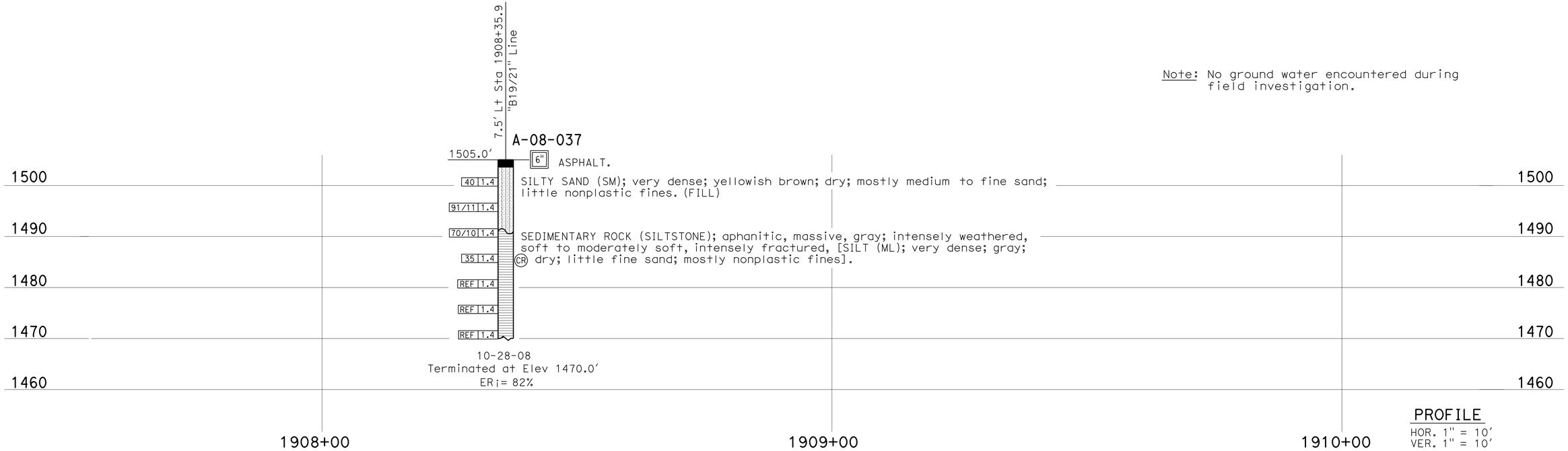

PROFILE

HOR. 1" = 10'
VER. 1" = 10'

ENGINEERING SERVICES	GEOTECHNICAL SERVICES	STATE OF CALIFORNIA DEPARTMENT OF TRANSPORTATION	DIVISION OF ENGINEERING SERVICES STRUCTURE DESIGN DESIGN BRANCH	BRIDGE NO. 36E-0030 POST MILES 10.62	RETAINING WALLS LOTB RW NO. 11
FUNCTIONAL SUPERVISOR NAME: M. Finegan	DRAWN BY: I. G-Remmen, 1/09 CHECKED BY: J. Kimura	FIELD INVESTIGATION BY: Z. Dellamas			

OGS CIVIL LOG OF TEST BORINGS SHEET

ORIGINAL SCALE IN INCHES FOR REDUCED PLANS 0 1 2 3

CU 05
EA 0L7014

DISREGARD PRINTS BEARING EARLIER REVISION DATES

REVISION DATES: 02/25/09 03/05/09 03/16/09 04/23/09 03/25/11 05/25/11 08/04/11

SHEET 61 OF 64

FILE => TBDRWD-s-ltb11.dgn

USERNAME => s114640 DATE PLOTTED => 01-OCT-2012 TIME PLOTTED => 08:18

REGISTERED CIVIL ENGINEER 8/4/11

9-24-12
PLANS APPROVAL DATE

REGISTERED PROFESSIONAL ENGINEER Dan Appelbaum No. C50001 Exp. 6-30-13 CIVIL STATE OF CALIFORNIA

The State of California or its officers or agents shall not be responsible for the accuracy or completeness of electronic copies of this plan sheet.

REFERENCE: CALTRANS SOIL & ROCK LOGGING, CLASSIFICATION, AND PRESENTATION MANUAL (JUNE 2007)

CEMENTATION

Description	Criteria
Weak	Crumbles or breaks with handling or little finger pressure.
Moderate	Crumbles or breaks with considerable finger pressure.
Strong	Will not crumble or break with finger pressure.

CONSISTENCY OF COHESIVE SOILS

Description	Unconfined Compressive Strength (tsf)	Pocket Penetrometer Measurement (tsf)	Torvane Measurement (tsf)	Field Approximation
Very Soft	< 0.25	< 0.25	< 0.12	Easily penetrated several inches by fist
Soft	0.25 to 0.50	0.25 to 0.50	0.12 to 0.25	Easily penetrated several inches by thumb
Medium Stiff	0.50 to 1.0	0.50 to 1.0	0.25 to 0.50	Penetrated several inches by thumb with moderate effort
Stiff	1 to 2	1 to 2	0.50 to 1.0	Readily indented by thumb but penetrated only with great effort
Very Stiff	2 to 4	2 to 4	1.0 to 2.0	Readily indented by thumbnail
Hard	> 4.0	> 4.0	> 2.0	Indented by thumbnail with difficulty

BOREHOLE IDENTIFICATION

Symbol	Hole Type	Description
Size	A	Auger Boring
Size	R P	Rotary drilled boring Rotary percussion boring (air)
Size	R	Rotary drilled diamond core
Size	HD HA	Hand driven (1-inch soil tube) Hand Auger
●	D	Dynamic Cone Penetration Boring
▲	CPT	Cone Penetration Test (ASTM D 5778-95)
⬚	O	Other

Note: Size in inches.

PLASTICITY OF FINE-GRAINED SOILS

Description	Criteria
Nonplastic	A 1/8-inch thread cannot be rolled at any water content.
Low	The thread can barely be rolled and the lump cannot be formed when drier than the plastic limit.
Medium	The thread is easy to roll and not much time is required to reach the plastic limit. The thread cannot be rerolled after reaching the plastic limit. The lump crumbles when drier than the plastic limit.
High	It takes considerable time rolling and kneading to reach the plastic limit. The thread can be rerolled several times after reaching the plastic limit. The lump can be formed without crumbling when drier than the plastic limit.

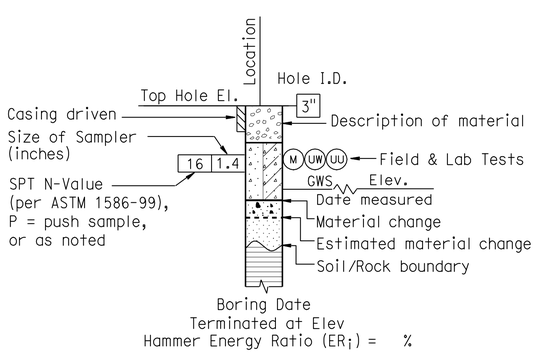

ROTARY BORING

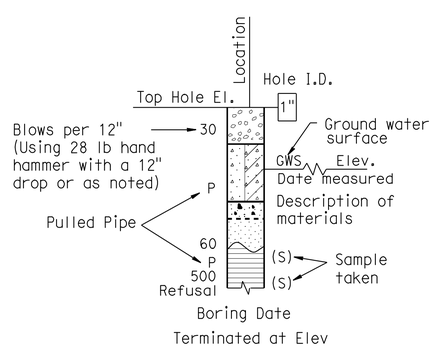

HAND BORING

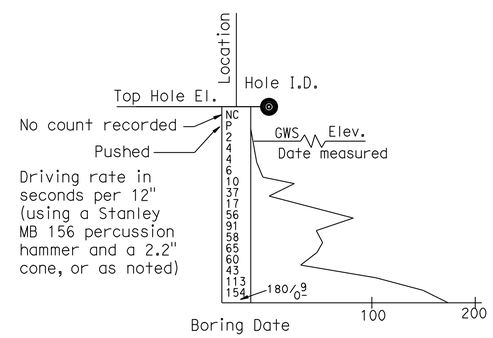

DYNAMIC CONE PENETRATION BORING

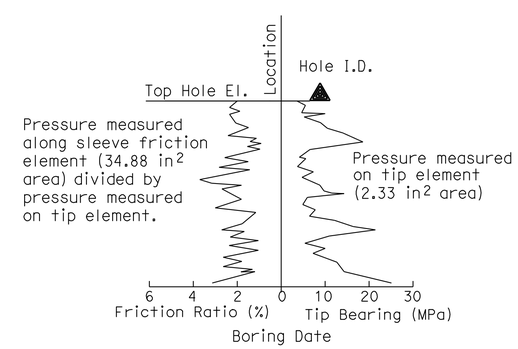

CONE PENETRATION TEST (CPT) SOUNDING

ENGINEERING SERVICES	GEOTECHNICAL SERVICES	STATE OF CALIFORNIA DEPARTMENT OF TRANSPORTATION	DIVISION OF ENGINEERING SERVICES STRUCTURE DESIGN DESIGN BRANCH	BRIDGE NO. Varies / POST MILE Varies	RETAINING WALLS LOTB NOTES 1 OF 3
	PREPARED BY: I.G-Remmen, 2/09				

GS LOTB SOIL LEGEND

ORIGINAL SCALE IN INCHES FOR REDUCED PLANS 0 1 2 3

CU 05
EA 0L7014

DISREGARD PRINTS BEARING EARLIER REVISION DATES

REVISION DATES: 02-26-09 03-06-09 03/18/09 04/23/09 03/28/11 05/20/11 08/04/11

SHEET 62 OF 64

FILE => TBDRWD-s-ltb12.dgn

USERNAME => s114640 DATE PLOTTED => 01-OCT-2012 TIME PLOTTED => 08:18

REFERENCE: CALTRANS SOIL & ROCK LOGGING, CLASSIFICATION, AND PRESENTATION MANUAL (JUNE 2007)

DIST	COUNTY	ROUTE	POST MILES TOTAL PROJECT	SHEET No	TOTAL SHEETS
05	SCr	17	6.0/12.6	260	284

Dan Appelbaum 8/4/11
REGISTERED CIVIL ENGINEER

9-24-12
PLANS APPROVAL DATE

REGISTERED PROFESSIONAL ENGINEER Dan Appelbaum No. C50001 Exp. 6-30-13 CIVIL STATE OF CALIFORNIA

The State of California or its officers or agents shall not be responsible for the accuracy or completeness of electronic copies of this plan sheet.

GROUP SYMBOLS AND NAMES

Graphic/Symbol	Group Names	Graphic/Symbol	Group Names
GW	Well-graded GRAVEL Well-graded GRAVEL with SAND	CL	Lean CLAY Lean CLAY with SAND Lean CLAY with GRAVEL SANDY lean CLAY SANDY lean CLAY with GRAVEL GRAVELLY lean CLAY GRAVELLY lean CLAY with SAND
GP	Poorly graded GRAVEL Poorly graded GRAVEL with SAND		
GW-GM	Well-graded GRAVEL with SILT Well-graded GRAVEL with SILT and SAND	CL-ML	SILTY CLAY SILTY CLAY with SAND SILTY CLAY with GRAVEL SANDY SILTY CLAY SANDY SILTY CLAY with GRAVEL GRAVELLY SILTY CLAY GRAVELLY SILTY CLAY with SAND
GW-GC	Well-graded GRAVEL with CLAY (or SILTY CLAY) Well-graded GRAVEL with CLAY and SAND (or SILTY CLAY and SAND)		
GP-GM	Poorly graded GRAVEL with SILT Poorly graded GRAVEL with SILT and SAND	ML	SILT SILT with SAND SILT with GRAVEL SANDY SILT SANDY SILT with GRAVEL GRAVELLY SILT GRAVELLY SILT with SAND
GP-GC	Poorly graded GRAVEL with CLAY (or SILTY CLAY) Poorly graded GRAVEL with CLAY and SAND (or SILTY CLAY and SAND)		
GM	SILTY GRAVEL SILTY GRAVEL with SAND	OL	ORGANIC lean CLAY ORGANIC lean CLAY with SAND ORGANIC lean CLAY with GRAVEL SANDY ORGANIC lean CLAY SANDY ORGANIC lean CLAY with GRAVEL GRAVELLY ORGANIC lean CLAY GRAVELLY ORGANIC lean CLAY with SAND
GC	CLAYEY GRAVEL CLAYEY GRAVEL with SAND		
GC-GM	SILTY, CLAYEY GRAVEL SILTY, CLAYEY GRAVEL with SAND	OL	ORGANIC SILT ORGANIC SILT with SAND ORGANIC SILT with GRAVEL SANDY ORGANIC SILT SANDY ORGANIC SILT with GRAVEL GRAVELLY ORGANIC SILT GRAVELLY ORGANIC SILT with SAND
SW	Well-graded SAND Well-graded SAND with GRAVEL		
SP	Poorly graded SAND Poorly graded SAND with GRAVEL	CH	Fat CLAY Fat CLAY with SAND Fat CLAY with GRAVEL SANDY fat CLAY SANDY fat CLAY with GRAVEL GRAVELLY fat CLAY GRAVELLY fat CLAY with SAND
SW-SM	Well-graded SAND with SILT Well-graded SAND with SILT and GRAVEL		
SW-SC	Well-graded SAND with CLAY (or SILTY CLAY) Well-graded SAND with CLAY and GRAVEL (or SILTY CLAY and GRAVEL)	MH	Elastic SILT Elastic SILT with SAND Elastic SILT with GRAVEL SANDY elastic SILT SANDY elastic SILT with GRAVEL GRAVELLY elastic SILT GRAVELLY elastic SILT with SAND
SP-SM	Poorly graded SAND with SILT Poorly graded SAND with SILT and GRAVEL		
SP-SC	Poorly graded SAND with CLAY (or SILTY CLAY) Poorly graded SAND with CLAY and GRAVEL (or SILTY CLAY and GRAVEL)	OH	ORGANIC fat CLAY ORGANIC fat CLAY with SAND ORGANIC fat CLAY with GRAVEL SANDY ORGANIC fat CLAY SANDY ORGANIC fat CLAY with GRAVEL GRAVELLY ORGANIC fat CLAY GRAVELLY ORGANIC fat CLAY with SAND
SM	SILTY SAND SILTY SAND with GRAVEL		
SC	CLAYEY SAND CLAYEY SAND with GRAVEL	OH	ORGANIC elastic SILT ORGANIC elastic SILT with SAND ORGANIC elastic SILT with GRAVEL SANDY ORGANIC elastic SILT SANDY ORGANIC elastic SILT with GRAVEL GRAVELLY ORGANIC elastic SILT GRAVELLY ORGANIC elastic SILT with SAND
SC-SM	SILTY, CLAYEY SAND SILTY, CLAYEY SAND with GRAVEL		
PT	PEAT	OL/OH	ORGANIC SOIL ORGANIC SOIL with SAND ORGANIC SOIL with GRAVEL SANDY ORGANIC SOIL SANDY ORGANIC SOIL with GRAVEL GRAVELLY ORGANIC SOIL GRAVELLY ORGANIC SOIL with SAND
	COBBLES COBBLES and BOULDERS BOULDERS		

FIELD AND LABORATORY TESTING

- (C) Consolidation (ASTM D 2435)
- (CL) Collapse Potential (ASTM D 5333)
- (CP) Compaction Curve (CTM 216)
- (CR) Corrosivity Testing (CTM 643, CTM 422, CTM 417)
- (CU) Consolidated Undrained Triaxial (ASTM D 4767)
- (DS) Direct Shear (ASTM D 3080)
- (EI) Expansion Index (ASTM D 4829)
- (M) Moisture Content (ASTM D 2216)
- (OC) Organic Content-% (ASTM D 2974)
- (P) Permeability (CTM 220)
- (PA) Particle Size Analysis (ASTM D 422)
- (PI) Plasticity Index (AASHTO T 90) Liquid Limit (AASHTO T 89)
- (PL) Point Load Index (ASTM D 5731)
- (PM) Pressure Meter
- (PP) Pocket Penetrometer
- (R) R-Value (CTM 301)
- (SE) Sand Equivalent (CTM 217)
- (SG) Specific Gravity (AASHTO T 100)
- (SL) Shrinkage Limit (ASTM D 427)
- (SW) Swell Potential (ASTM D 4546)
- (TV) Pocket Torvane
- (UC) Unconfined Compression-Soil (ASTM D 2166) Unconfined Compression-Rock (ASTM D 2938)
- (UU) Unconsolidated Undrained Triaxial (ASTM D 2850)
- (UW) Unit Weight (ASTM D 4767)
- (VS) Vane Shear (AASHTO T 223)

APPARENT DENSITY OF COHESIONLESS SOILS

Description	SPT N_{60} (Blows / 12 inches)
Very loose	0 - 4
Loose	5 - 10
Medium Dense	11 - 30
Dense	31 - 50
Very Dense	> 50

MOISTURE

Description	Criteria
Dry	Absence of moisture, dusty, dry to the touch
Moist	Damp but no visible water
Wet	Visible free water, usually soil is below water table

PERCENT OR PROPORTION OF SOILS

Description	Criteria
Trace	Particles are present but estimated to be less than 5%
Few	5 to 10%
Little	15 to 25%
Some	30 to 45%
Mostly	50 to 100%

PARTICLE SIZE

Description		Size
Boulder		> 12"
Cobble		3" to 12"
Gravel	Coarse	3/4" to 3"
	Fine	No. 4 to 3/4"
Sand	Coarse	No. 10 to No. 4
	Medium	No. 40 to No. 10
	Fine	No. 200 to No. 40

ENGINEERING SERVICES

GEOTECHNICAL SERVICES
PREPARED BY: I.G-Remmen, 2/09

STATE OF CALIFORNIA
DEPARTMENT OF TRANSPORTATION

DIVISION OF ENGINEERING SERVICES
STRUCTURE DESIGN
DESIGN BRANCH

BRIDGE NO. Varies
POST MILE Varies

RETAINING WALLS
LOTB NOTES

GS LOTB SOIL LEGEND

ORIGINAL SCALE IN INCHES FOR REDUCED PLANS 0 1 2 3

CU 05
EA 0L7014

DISREGARD PRINTS BEARING EARLIER REVISION DATES

REVISION DATES: 02-26-09 03-05-09 03/18/09 04/23/09 03/28/11 05/25/11 08/04/11

SHEET 63 OF 64

FILE => TBDRWD-s-ltb13.dgn

USERNAME => s114640 DATE PLOTTED => 01-OCT-2012 TIME PLOTTED => 08:18

DIST	COUNTY	ROUTE	POST MILES TOTAL PROJECT	SHEET No	TOTAL SHEETS
05	SCr	17	6.0/12.6	261	284

REGISTERED CIVIL ENGINEER 8/4/11

9-24-12
PLANS APPROVAL DATE

The State of California or its officers or agents shall not be responsible for the accuracy or completeness of electronic copies of this plan sheet.

REGISTERED PROFESSIONAL ENGINEER Dan Appelbaum No. C50001 Exp. 6-30-13 CIVIL STATE OF CALIFORNIA

REFERENCE: CALTRANS SOIL & ROCK LOGGING, CLASSIFICATION, AND PRESENTATION MANUAL (JUNE 2007)

PERCENT CORE RECOVERY (REC) & ROCK QUALITY DESIGNATION (RQD)

$$REC = \frac{\sum \text{Length of the recovered core pieces (inches)}}{\text{Total length of core run (inches)}} \times 100\%$$

$$RQD = \frac{\sum \text{Length of intact core pieces} \geq 4''}{\text{Total length of core run (inches)}} \times 100\%$$

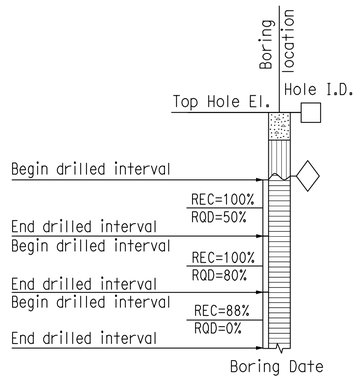

RELATIVE STRENGTH OF INTACT ROCK

Term	Uniaxial Compressive Strength (PSI)
Extremely Strong	> 30,000
Very Strong	14,500 - 30,000
Strong	7,000 - 14,500
Medium Strong	3,500 - 7,000
Weak	700 - 3,500
Very Weak	150 - 700
Extremely Weak	< 150

BEDDING SPACING

Description	Thickness / Spacing
Massive	Greater than 10 ft
Very thickly bedded	3 to 10 ft
Thickly bedded	1 to 3 ft
Moderately bedded	3-5/8" to 1 ft
Thinly bedded	1-1/4" to 3-5/8"
Very thinly bedded	3/8" to 1-1/4"
Laminated	Less than 3/8"

LEGEND OF ROCK MATERIALS

- IGNEOUS ROCK
- SEDIMENTARY ROCK
- METAMORPHIC ROCK

ROCK HARDNESS

Description	Criteria
Extremely Hard	Specimen cannot be scratched with a pocket knife or sharp pick; can only be chipped with repeated heavy hammer blows.
Very Hard	Specimen cannot be scratched with a pocket knife or sharp pick. Breaks with repeated heavy hammer blows.
Hard	Specimen can be scratched with a pocket knife or sharp pick with difficulty (heavy pressure). Heavy hammer blows required to break specimen.
Moderately Hard	Specimen can be scratched with pocket knife or sharp pick with light or moderate pressure. Core breaks with moderate hammer blows.
Moderately Soft	Specimen can be grooved 1/6" deep with a pocket knife or sharp pick with moderate or heavy pressure. Breaks with light hammer blow or heavy manual pressure.
Soft	Specimen can be grooved or gouged easily by a pocket knife or sharp pick with light pressure, can be scratched with fingernail. Breaks with light to moderate manual pressure.
Very Soft	Specimen can be readily indented, grooved or gouged with fingernail, or carved with a pocket knife. Breaks with light manual pressure.

FRACTURE DENSITY

Description	Observed Fracture Density
Unfractured	No fractures.
Very slightly fractured	Lengths greater than 3 feet.
Slightly fractured	Lengths from 1 to 3 feet with few lengths less than 1 foot or greater than 3 feet.
Moderately fractured	Lengths mostly in 4" to 1 foot range with most lengths about 8"
Intensely fractured	Lengths average from 1 to 4" with scattered fragmented intervals with lengths less than 4"
Very intensely fractured	Mostly chips and fragments with a few scattered short core lengths.

Combination descriptors (such as "Very intensely to intensely fractured") are used where equal distribution of both fracture density characteristics is present over a significant interval or exposure, or where characteristics are "in between" the descriptor definitions. Only two adjacent descriptors may be combined.

WEATHERING DESCRIPTORS FOR INTACT ROCK

Description	Diagnostic features					General Characteristics
	Chemical Weathering-Discoloration and/or oxidation		Mechanical Weathering-Grain boundary conditions (disaggregation) primarily for granitics and some coarse-grained sediments	Texture and Solutioning		
	Body of Rock	Fracture Surfaces		Texture	Solutioning	
Fresh	No discoloration, not oxidized.	No discoloration or oxidation.	No separation, intact (tight).	No change.	No solutioning.	Hammer rings when crystalline rocks are struck.
Slightly Weathered	Discoloration or oxidation is limited to surface of, or short distance from, fractures; some feldspar crystals are dull.	Minor to complete discoloration or oxidation of most surfaces.	No visible separation, intact (tight).	Preserved.	Minor leaching of some soluble minerals may be noted.	Hammer rings when crystalline rocks are struck. Body of rock not weakened.
Moderately Weathered	Discoloration or oxidation extends from fractures usually throughout; Fe-Mg minerals are "rusty," feldspar crystals are "cloudy."	All fracture surfaces are discolored or oxidized.	Partial separation of boundaries visible.	Generally preserved.	Soluble minerals may be mostly leached.	Hammer does not ring when rock is struck. Body of rock is slightly weakened.
Intensely Weathered	Discoloration or oxidation throughout; all feldspars and Fe-Mg minerals are altered to clay to some extent; or chemical alteration produces in-situ disaggregation, see grain boundary conditions.	All fracture surfaces are discolored or oxidized, surfaces friable.	Partial separation, rock is friable; in semiarid conditions granitics are disaggregated.	Texture altered by chemical disintegration (hydration, argillation).	Leaching of soluble minerals may be complete.	Dull sound when struck with hammer, usually can be broken with moderate to heavy manual pressure or by light hammer blow without reference to planes of weakness such as incipient or hairline fractures, or veinlets. Rock is significantly weakened.
Decomposed	Discolored or oxidized throughout, but resistant minerals such as quartz may be unaltered; all feldspars and Fe-Mg minerals are completely altered to clay.		Complete separation of grain boundaries (disaggregated).	Resembles a soil, partial or complete remnant rock structure may be preserved; leaching of soluble minerals usually complete.		Can be granulated by hand. Resistant minerals such as quartz may be present as "stringers" or "dikes."

Combination descriptors (such as "slightly weathered to fresh") are permissible where equal distribution of both weathering characteristics is present over significant intervals or where characteristics present are "in between" the diagnostic feature. However, combination descriptors should not be used where significant, identifiable zones can be delineated. Only two adjacent descriptors may be combined. "Very intensely weathered" is the combination descriptor for "intensely weathered to decomposed."

ENGINEERING SERVICES	GEOTECHNICAL SERVICES	STATE OF CALIFORNIA DEPARTMENT OF TRANSPORTATION	DIVISION OF ENGINEERING SERVICES STRUCTURE DESIGN DESIGN BRANCH	BRIDGE NO. Varies / POST MILE Varies	RETAINING WALLS LOTB NOTES
	PREPARED BY: I.G-Remmen, 2/09		CU 05 EA 0L7014	DISREGARD PRINTS BEARING EARLIER REVISION DATES	SHEET 64 OF 64

GS LOTB ROCK LEGEND

ORIGINAL SCALE IN INCHES FOR REDUCED PLANS 0 1 2 3

REVISION DATES: 02-26-09 03-05-09 03/16/09 04/23/09 03/28/11 05/25/11 08/04/11

FILE => TBDRWD-s-ltb14.dgn

USERNAME => s114640 DATE PLOTTED => 01-OCT-2012 TIME PLOTTED => 08:18

DIST	COUNTY	ROUTE	POST MILES TOTAL PROJECT	SHEET No	TOTAL SHEETS
05	SCr	17	6.0/12.6	262	284

REGISTERED CIVIL ENGINEER — 8/4/11 DATE

9-24-12
PLANS APPROVAL DATE

REGISTERED PROFESSIONAL ENGINEER — T. Dudley — No. C039514 — Exp. 12/31/11 — CIVIL — STATE OF CALIFORNIA

The State of California or its officers or agents shall not be responsible for the accuracy or completeness of electronic copies of this plan sheet.

AECOM TECHNICAL SERVICES, INC.
2020 L STREET, SUITE 300
SACRAMENTO, CALIFORNIA 95811

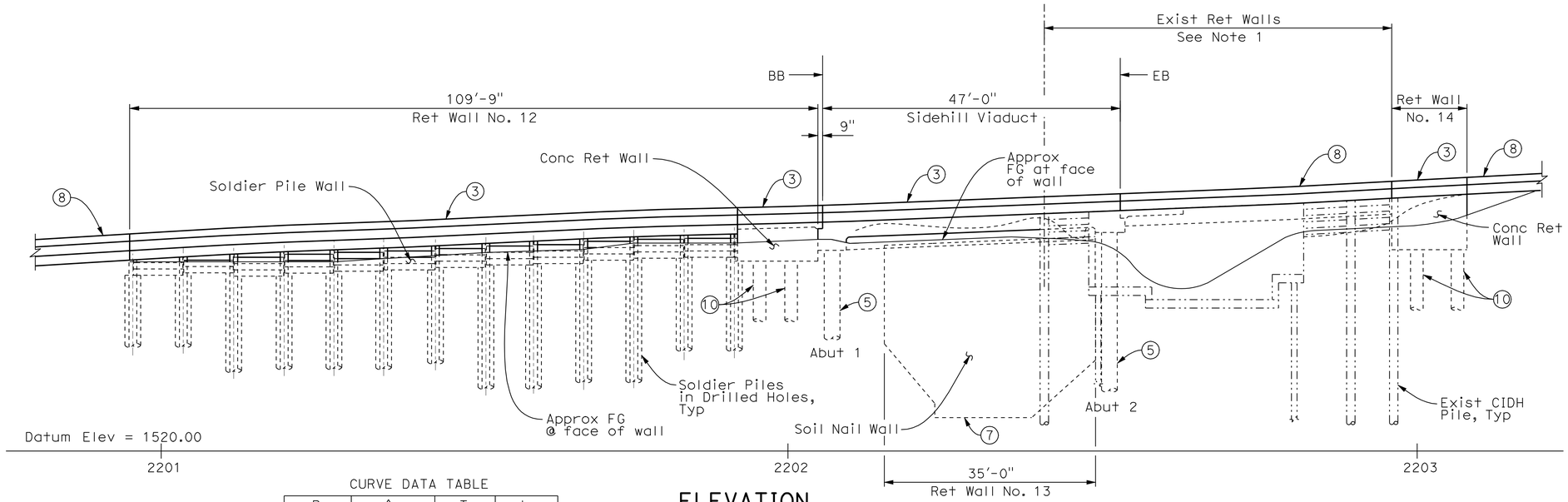

ELEVATION
1" = 10'

CURVE DATA TABLE

	R	Δ	T	L
A	124.00	09°16'40"	10.06	20.08
B	594.00	26°24'09"	139.33	273.72

LEGEND:

1. Paint "Br No. 36-0114"
2. Paint "Sidehill Viaduct"
3. Concrete Barrier Type 732 (Mod)
4. Concrete Barrier Slab
5. 30" dia CIDH Concrete pile
6. Structure Approach Slab, Type EQ(10) (MOD)
7. Permanent Shotcrete Surface
8. Concrete Barrier Type 732B, see "Road Plans"
9. Exist MBGR to be removed, see"Road Plans"
10. 24" dia CIDH Concrete Pile

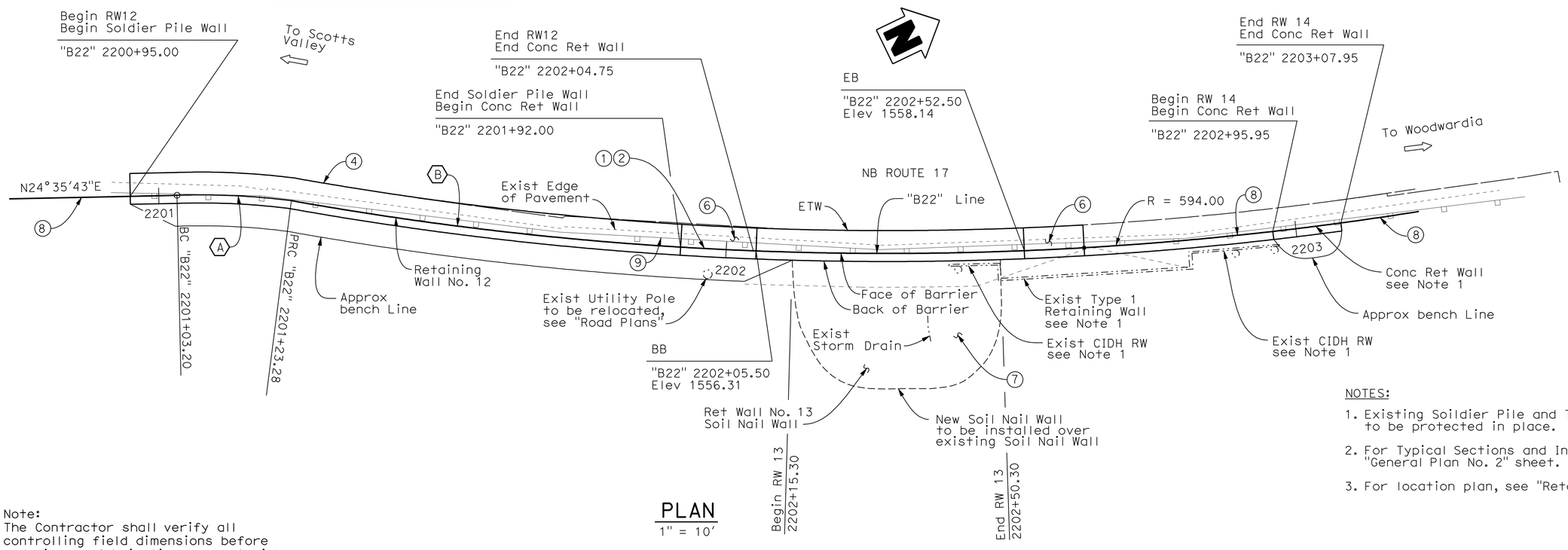

PLAN
1" = 10'

NOTES:

1. Existing Soildier Pile and Type 1 Retaining Walls to be protected in place.
2. For Typical Sections and Index to Plans, see "General Plan No. 2" sheet.
3. For location plan, see "Retaining Walls" plans.

Note:
The Contractor shall verify all controlling field dimensions before ordering or fabricating any material.

DESIGN OVERSIGHT Wei An	DESIGN	BY T. Dudley	CHECKED B. Fish/R. Price	LOAD & RESISTANCE FACTOR DESIGN	LIVE LOADING: HS20-44 AND ALTERNATIVE AND PERMIT DESIGN LOAD
8-10-11 SIGN OFF DATE	DETAILS	BY S. Desalegn/C. Lee	CHECKED B. Fish/R. Price	LAYOUT	BY S. Desalegn — CHECKED T. Dudley
	QUANTITIES	BY T. Dudley/M. Stiller	CHECKED E. Nevarez/S. Desalegn	SPECIFICATIONS	BY T. Dudley — PLANS AND SPECS COMPARED

PREPARED FOR THE STATE OF CALIFORNIA DEPARTMENT OF TRANSPORTATION

Stephen Mislinski
PROJECT ENGINEER

BRIDGE NO. 36-0114
POST MILES 10.95

SIDEHILL VIADUCT
GENERAL PLAN NO. 1

DESIGN GENERAL PLAN SHEET (ENGLISH) (REV.2/25/05)

ORIGINAL SCALE IN INCHES FOR REDUCED PLANS 0 1 2 3

CU 05
EA OL7014

DISREGARD PRINTS BEARING EARLIER REVISION DATES

REVISION DATES (PRELIMINARY STAGE ONLY): 3/19/08 02/04/09 03/16/09 03/16/09 04/23/09 03/23/11 05/27/11 08/04/11 8-9-11

SHEET 1 OF 23

FILE => TBDSHV-a-gp01.dgn

USERNAME => s114640 DATE PLOTTED => 01-OCT-2012 TIME PLOTTED => 08:18

DIST	COUNTY	ROUTE	POST MILES TOTAL PROJECT	SHEET No	TOTAL SHEETS
05	SCr	17	6.0/12.6	263	284

REGISTERED CIVIL ENGINEER 8/4/11 DATE

9-24-12
PLANS APPROVAL DATE

REGISTERED PROFESSIONAL ENGINEER T. Dudley No. C039514 Exp. 12/31/11 CIVIL STATE OF CALIFORNIA

The State of California or its officers or agents shall not be responsible for the accuracy or completeness of electronic copies of this plan sheet.

AECOM TECHNICAL SERVICES, INC.
2020 L STREET, SUITE 300
SACRAMENTO, CALIFORNIA 95811

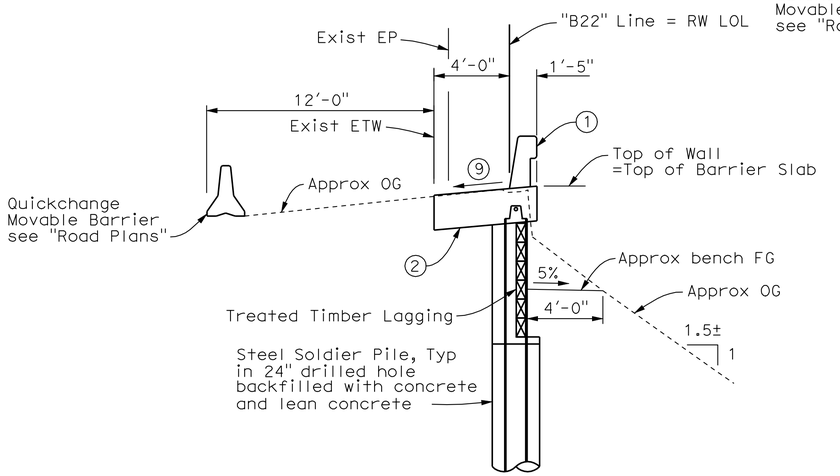

SOLDIER PILE WALL
TYPICAL SECTION
1/4" = 1'-0"

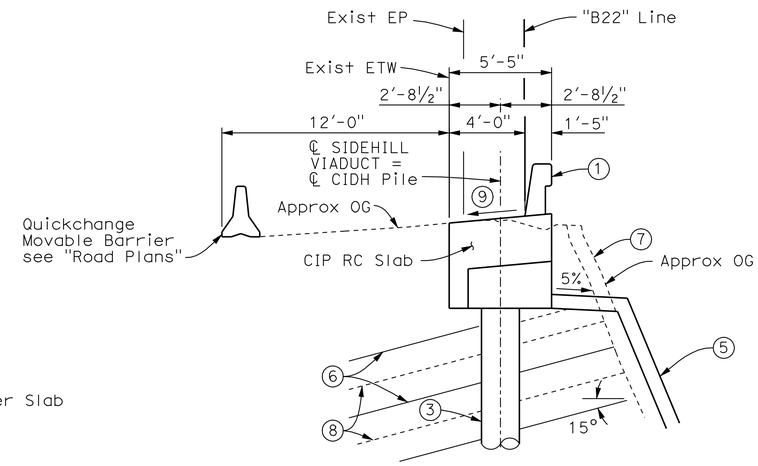

SIDEHILL VIADUCT AND SOIL NAIL WALL
TYPICAL SECTION
1/4" = 1'-0"

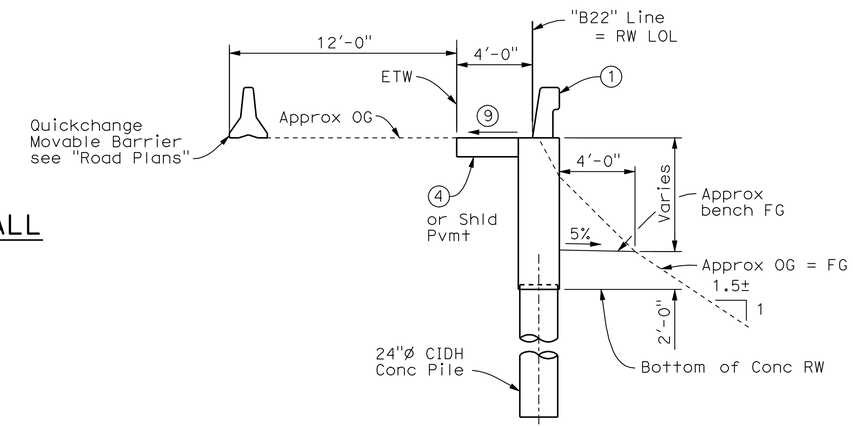

CONCRETE RETAINING WALL
TYPICAL SECTION
1/4" = 1'-0"

INDEX TO PLANS

SHEET No.	TITLE
1.	GENERAL PLAN NO. 1
2.	GENERAL PLAN NO. 2
3.	GENERAL NOTES NO. 1
4.	GENERAL NOTES NO. 2
5.	FOUNDATION PLAN
6.	ABUTMENT DETAILS
7.	RETAINING WALL STRUCTURE PLAN
8.	RETAINING WALL DETAILS NO. 1
9.	RETAINING WALL DETAILS NO. 2
10.	RETAINING WALL DETAILS NO. 3
11.	RETAINING WALL DETAILS NO. 4
12.	RW NO. 13 SOIL NAIL WALL DETAILS
13.	SOIL NAIL DETAILS
14.	RC SLAB DETAILS
15.	SLAB REINFORCEMENT DETAILS
16.	STRUCTURE APPROACH TYPE EQ(10)
17.	TEST NAIL DETAILS
18.	LOG OF TEST BORINGS 1 OF 6
19.	LOG OF TEST BORINGS 2 OF 6
20.	LOG OF TEST BORINGS 3 OF 6
21.	LOG OF TEST BORINGS 4 OF 6
22.	LOG OF TEST BORINGS 5 OF 6
23.	LOG OF TEST BORINGS 6 OF 6

STANDARD PLANS DATED MAY 2006

A10A	ACRONYMS AND ABBREVIATIONS (A-L)
A10B	ACRONYMS AND ABBREVIATIONS (M-Z)
A10C	SYMBOLS (SHEET 1 OF 2)
A10D	SYMBOLS (SHEET 2 OF 2)
B0-1	BRIDGE DETAILS
B0-3	BRIDGE DETAILS
B0-13	BRIDGE DETAILS
RSP B6-21	JOINT SEALS (MAXIMUM MOVEMENT RATING = 2")
B11-55	CONCRETE BARRIER TYPE 732

STANDARD PLAN SHEET NO.

DETAIL NO.

LEGEND:

1. Concrete Barrier Type 732 (Mod)
2. Concrete Barrier Slab
3. 30" dia CIDH Concrete pile
4. Structure Approach Slab, Type EQ(10) (MOD)
5. Shotcrete Surface
6. Soil Nail
7. Existing Shotcrete Surface
8. Existing Soil Nails
9. Match existing cross slope

QUANTITIES

REMOVE RETAINING WALL (PORTION), LOCATION C	LUMP	SUM
24" DRILLED HOLE	291	LF
STRUCTURE EXCAVATION (BRIDGE)	46	CY
STRUCTURE EXCAVATION (RETAINING WALL)	28	CY
STRUCTURE EXCAVATION (SOLDIER PILE WALL)	36	CY
STRUCTURE EXCAVATION (TYPE Z-2) (AERIALLY DEPOSITED LEAD)	17	CY
STRUCTURE BACKFILL (BRIDGE)	7	CY
STRUCTURE BACKFILL (RETAINING WALL)	9	CY
STRUCTURE BACKFILL (SOLDIER PILE WALL)	9	CY
CONCRETE BACKFILL	24	CY
LEAN CONCRETE BACKFILL	7	CY
SOIL NAIL ASSEMBLY	1,840	LF
INSTALL STEEL SOLDIER PILING	13	EA
30" CAST-IN-DRILLED-HOLE CONCRETE PILING	97	LF
24" CAST-IN-DRILLED-HOLE CONCRETE PILING (RETAINING WALL)	79	LF
STRUCTURAL CONCRETE, BRIDGE	29	CY
STRUCTURAL CONCRETE, RETAINING WALL	17	CY
STRUCTURAL CONCRETE, BARRIER SLAB	36	CY
STRUCTURAL CONCRETE, APPROACH SLAB (TYPE EQ)	2	CY
JOINT SEAL (MR½")	8	LF
JOINT SEAL (TYPE AL)	27	LF
BAR REINFORCING STEEL (BRIDGE)	25,084	LB
BAR REINFORCING STEEL (RETAINING WALL)	4,900	LB
SHOTCRETE	29	CY
INSTALL TIMBER LAGGING	LUMP	SUM
CLEAN AND PAINT STEEL SOLDIER PILING	LUMP	SUM
CONCRETE BARRIER (TYPE 732 MODIFIED)	170	LF

Note:
The Contractor shall verify all controlling field dimensions before ordering or fabricating any material.

DESIGN OVERSIGHT Wei An
8-10-11
SIGN OFF DATE

	BY	CHECKED		BY	CHECKED
DESIGN	T. Dudley	B. Fish/R. Price	LOAD & RESISTANCE FACTOR DESIGN	LIVE LOADING: HS20-44 AND ALTERNATIVE AND PERMIT DESIGN LOAD	
DETAILS	S. Desalegn/C. Lee	B. Fish/R. Price	LAYOUT	S. Desalegn	T. Dudley
QUANTITIES	T. Dudley/M. Stiller	E. Nevarez/S. Desalegn	SPECIFICATIONS	T. Dudley	PLANS AND SPECS COMPARED

PREPARED FOR THE STATE OF CALIFORNIA DEPARTMENT OF TRANSPORTATION

Stephen Mislinski
PROJECT ENGINEER

BRIDGE NO. 36-0114
POST MILES 10.95

SIDEHILL VIADUCT
GENERAL PLAN NO. 2

DESIGN GENERAL PLAN SHEET (ENGLISH) (REV.2/25/05)

ORIGINAL SCALE IN INCHES FOR REDUCED PLANS 0 1 2 3

CU 05
EA OL7014

DISREGARD PRINTS BEARING EARLIER REVISION DATES

REVISION DATES (PRELIMINARY STAGE ONLY) 9/30/08 02/04/09 03/30/09 03/16/09 04/23/09 03/25/11 05/23/11 08/04/11 8-9-11

SHEET 2 OF 23

FILE => TBDSHV-a-gp02.dgn

USERNAME => s114640 DATE PLOTTED => 01-OCT-2012 TIME PLOTTED => 08:18

DIST	COUNTY	ROUTE	POST MILES TOTAL PROJECT	SHEET No	TOTAL SHEETS
05	SCr	17	6.0/12.6	264	284

REGISTERED CIVIL ENGINEER 8/4/11 DATE

9-24-12
PLANS APPROVAL DATE

REGISTERED PROFESSIONAL ENGINEER T. Dudley No. C039514 Exp. 12/31/11 CIVIL STATE OF CALIFORNIA

The State of California or its officers or agents shall not be responsible for the accuracy or completeness of electronic copies of this plan sheet.

AECOM TECHNICAL SERVICES, INC.
2020 L STREET, SUITE 300
SACRAMENTO, CALIFORNIA 95811

GENERAL NOTES
LOAD AND RESISTANCE FACTOR DESIGN

DESIGN: AASHTO LRFD BRIDGE DESIGN SPECIFICATIONS, 3rd EDITION, with Interims through 2005 and the CALTRANS AMENDMENTS v3.06.01; except that geotechnical design of deep foundations, bridge details taken from Standard Plans May 2006 and earlier versions, and Standard Bridge Details XS sheets are designed using Bridge Design Specifications (1996 AASHTO with Revisions by CALTRANS).

DESIGN (Foundations only): CALTRANS BRIDGE DESIGN SPECIFICATIONS

SEISMIC DESIGN: CALTRANS SEISMIC DESIGN CRITERIA (SDC) Version 1.4 dated June, 2006

DEAD LOAD: Includes 35 psf for future wearing surface.

LIVE LOADING: HL93 and low-boy and permit design loads

SEISMIC LOADING: CALTRANS SDC ARS Curve: Figure 8.9, Soil Profile Type D Spectrum Peak Rock Acceleration = 0.7g

REINFORCED CONCRETE: f'_c = 4.0 ksi f_y = 60 ksi n = 8

SOIL NAIL WALL
LOAD FACTOR DESIGN

DESIGN: CALTRANS BRIDGE DESIGN SPECIFICATIONS - April 2000 (LFD) (1996 AASHTO with Interims and Revision by CALTRANS)

SHOTCRETE: f'_c = 3250 psi

STRUCTURAL STEEL: ASTM Designation: A709, Grade 36

SOIL NAILS: ASTM A615 or A706
Epoxy Coated, f_y = 60 ksi

SOIL PARAMETERS:
ϕ = 25° γ_m = 115 pcf c = 100 psf

Design Nail Pullout Resistance = 680 lb/ft, Static

SEISMIC LOADING: Horizontal Earth Load Acceleration = 0.2 g

LIVE LOAD: 240 psf

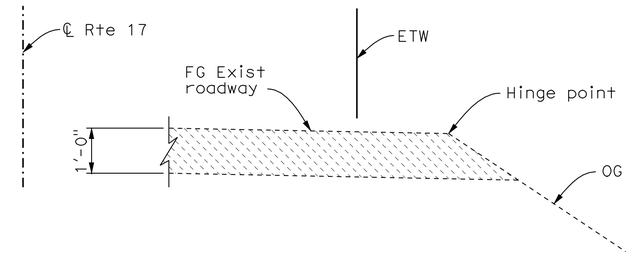

LIMITS OF STRUCTURE EXCAVATION (TYPE Z-2)
(AERIALLY DEPOSITED LEAD)

No scale

(Station limit 2200+95.00 - 2203+07.95)

Note: Existing highway improvements not shown for clarity.

SOLDIER PILE WALL, CONCRETE RETAINING WALL
LOAD FACTOR DESIGN

DESIGN: CALTRANS BRIDGE DESIGN SPECIFICATIONS - April 2000 (LFD) (1996 AASHTO with Interims and Revision by CALTRANS)

LIVE LOAD: Surcharge = 240 psf

SEISMIC DESIGN: CALTRANS SEISMIC DESIGN CRITERIA (SDC) Version 1.4 dated June, 2006

SOIL PARAMETERS: See Foundation Report for each retaining wall

REINFORCED CONCRETE (Typ, UON):

f'_c = 3.6 ksi (Concrete compressive strength at 28 days)
f_y = 60 ksi (Yield strength of reinforcement)

CIDH CONCRETE PILE:

f'_c = 4.0 ksi (Concrete compressive strength at 28 days)
f_y = 60 ksi (Yield strength of reinforcement)

STRUCTURAL STEEL:

Steel Piles - ASTM Designation: A709, Grade 50

Plates - ASTM Designation: A709, Grade 36 or A36

TIMBER:

Treated Douglas Fir Grade No. 1 or Better
Lagging members shall be sawn full size and pressure treated with preservative

- Structural Concrete, Bridge (4,000 psi)
- CIDH Concrete Pile (4,000 psi)
- Structural Approach Type EQ (10)

CONCRETE STRENGTH AND TYPE LIMITS SIDEHILL VIADUCT

NO SCALE

Note:
The Contractor shall verify all controlling field dimensions before ordering or fabricating any material.

DESIGN OVERSIGHT Wei An

SIGN OFF DATE

	BY	CHECKED
DESIGN	T. Dudley	R. Price
DETAILS	S. Desalegn	R. Price
QUANTITIES	T. Dudley / M. Stiller	E. Nevarez/S. Desalegn

PREPARED FOR THE STATE OF CALIFORNIA DEPARTMENT OF TRANSPORTATION

Stephen J. Mislinski
PROJECT ENGINEER

BRIDGE NO. 36-0114
POST MILE 10.95

SIDEHILL VIADUCT
GENERAL NOTES NO. 1

DESIGN DETAIL SHEET (ENGLISH) (REV. 2/25/05)

ORIGINAL SCALE IN INCHES FOR REDUCED PLANS 0 1 2 3

CU 05
EA 0L7014

DISREGARD PRINTS BEARING EARLIER REVISION DATES

REVISION DATES (PRELIMINARY STAGE ONLY) 9/30/08 02/04/09 03/30/09 03/16/09 04/23/09 04/27/09 03/25/11 05/25/11 08/04/11

SHEET 3 OF 23

FILE => TBDSHV-b-gnotes01.dgn

USERNAME => s119571 DATE PLOTTED => 01-OCT-2012 TIME PLOTTED => 08:35

DIST	COUNTY	ROUTE	POST MILES TOTAL PROJECT	SHEET No	TOTAL SHEETS
05	SCr	17	6.0/12.6	265	284

REGISTERED CIVIL ENGINEER 8/4/11 DATE

9-24-12
PLANS APPROVAL DATE

REGISTERED PROFESSIONAL ENGINEER T. Dudley No. C039514 Exp. 12/31/11 CIVIL STATE OF CALIFORNIA

The State of California or its officers or agents shall not be responsible for the accuracy or completeness of electronic copies of this plan sheet.

AECOM TECHNICAL SERVICES, INC.
2020 L STREET, SUITE 300
SACRAMENTO, CALIFORNIA 95811

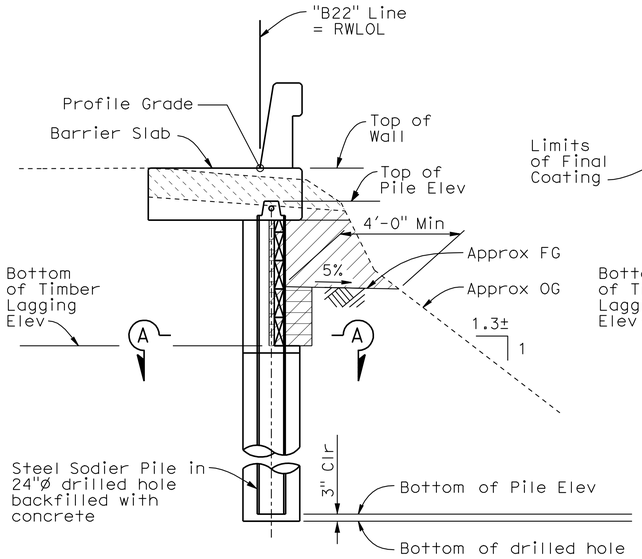

LIMITS OF PAYMENT FOR EXCAVATION AND BACKFILL (SOLDIER PILE WALL)

3/8" = 1'-0"

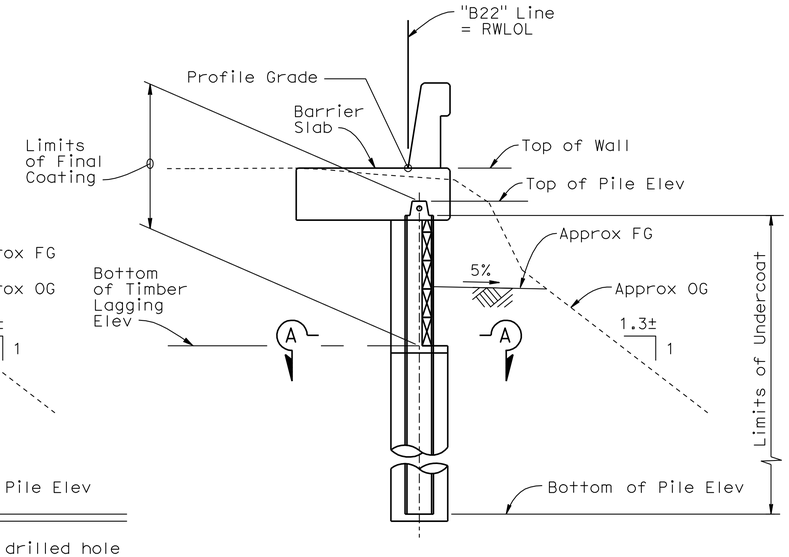

LIMITS OF PAYMENT FOR PAINTING OF PILES

3/8" = 1'-0"

NOTE:

1. See Limits of Structural Excavation (Type Z-2) (Aerially Deposited Lead) on "General Notes No. 1" sheet for limits of Type Z-2 material.

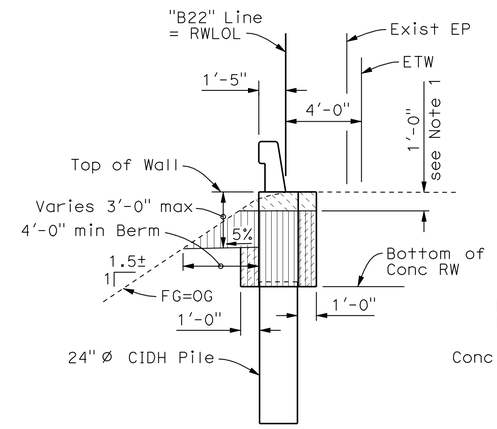

LIMITS OF PAYMENT FOR EXCAVATION AND BACKFILL (RETAINING WALL)

1/4" = 1'-0"

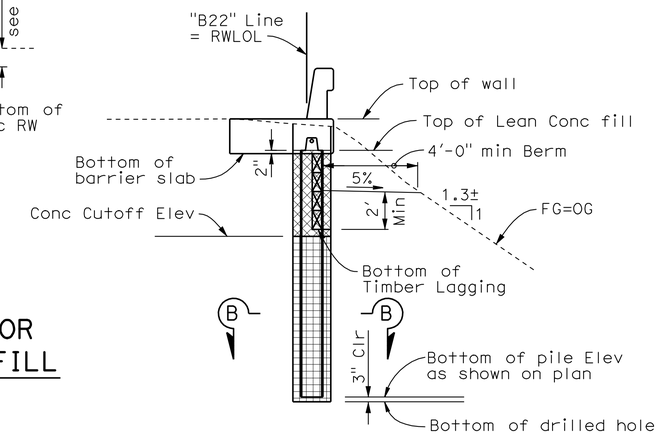

LIMITS OF PAYMENT FOR CONCRETE BACKFILL IN DRILLED HOLE SOLDIER PILE WALL

1/4" = 1'-0"

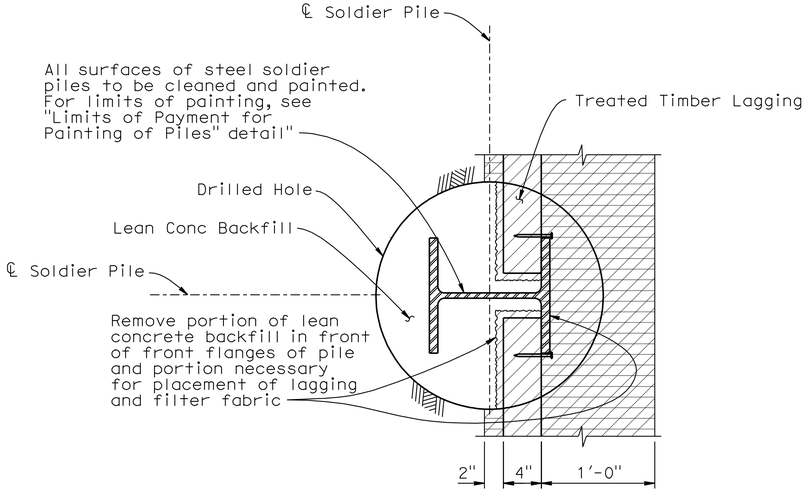

SECTION A-A

1 1/2" = 1-0"

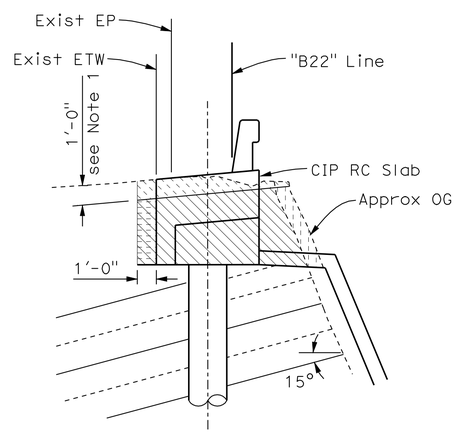

LIMITS OF PAYMENT FOR EXCAVATION AND BACKFILL (BRIDGE)

1/4" = 1'-0"

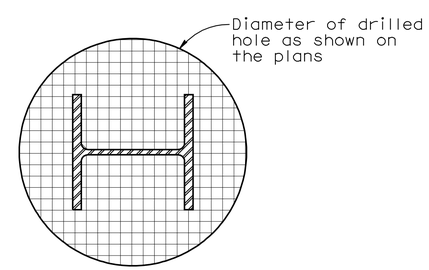

SECTION B-B

1 1/2" = 1-0"

LEGEND

- Concrete Backfill
- Lean Concrete Backfill
- Structure Excavation (Soldier Pile Wall)
- Structure Backfill (Soldier Pile Wall)
- Structure Excavation (Retaining Wall)
- Structure Backfill (Retaining Wall)
- Structure Excavation (Bridge)
- Structure Backfill (Bridge)
- Remove Retaining Wall (Portion), Location C
- Structure Excavation (Type Z-2) (Aerially Deposited Lead)

Note:
The Contractor shall verify all controlling field dimensions before ordering or fabricating any material.

DESIGN OVERSIGHT Wei An	DESIGN	BY T. Dudley	CHECKED R. Price
	DETAILS	BY S. Desalegn / C. Lee	CHECKED R. Price
SIGN OFF DATE	QUANTITIES	BY T. Dudley / M. Stiller	CHECKED E. Nevarez/S. Desalegn

PREPARED FOR THE STATE OF CALIFORNIA DEPARTMENT OF TRANSPORTATION

Stephen J. Mislinski
PROJECT ENGINEER

BRIDGE NO. 36-0114
POST MILE 10.95

SIDEHILL VIADUCT
GENERAL NOTES NO. 2

DESIGN DETAIL SHEET (ENGLISH) (REV. 2/25/05)

ORIGINAL SCALE IN INCHES FOR REDUCED PLANS 0 1 2 3

CU 05
EA 0L7014

DISREGARD PRINTS BEARING EARLIER REVISION DATES

REVISION DATES (PRELIMINARY STAGE ONLY) 9/30/08 02/04/09 03/16/09 03/16/09 04/23/09 04/27/09 03/25/11 05/25/11 08/04/11

SHEET 4 OF 23

FILE => TBDSHV-b-gnotes02.dgn

USERNAME => s119571 DATE PLOTTED => 01-OCT-2012 TIME PLOTTED => 08:35

DIST	COUNTY	ROUTE	POST MILES TOTAL PROJECT	SHEET No	TOTAL SHEETS
05	SCr	17	6.0/12.6	266	284

REGISTERED CIVIL ENGINEER 8/4/11 DATE

9-24-12
PLANS APPROVAL DATE

REGISTERED PROFESSIONAL ENGINEER T. Dudley No. C039514 Exp. 12/31/11 CIVIL STATE OF CALIFORNIA

The State of California or its officers or agents shall not be responsible for the accuracy or completeness of electronic copies of this plan sheet.

AECOM TECHNICAL SERVICES, INC.
2020 L STREET, SUITE 300
SACRAMENTO, CALIFORNIA 95811

LEGEND:

- ○ CIDH Pile
- Ⓘ Steel Soldier Pile in Drilled Hole
- I Existing Steel Piles
- Existing CIDH Piles
- 1547.62 Indicates bottom of Conc Ret Walll Elev

NOTES:

1. Existing Soildier Pile and Type 1 Retaining Walls to be protected in place.
2. All dimensions are measured along "B22" Line unless noted otherwise.
3. Backfill void with lean concrete backfill.
4. Remove interfering portions of steel piles.

CURVE DATA TABLE

	R	Δ	T	L
A	124.00	09°16'40"	10.06	20.08
B	594.00	26°24'09"	139.33	273.72

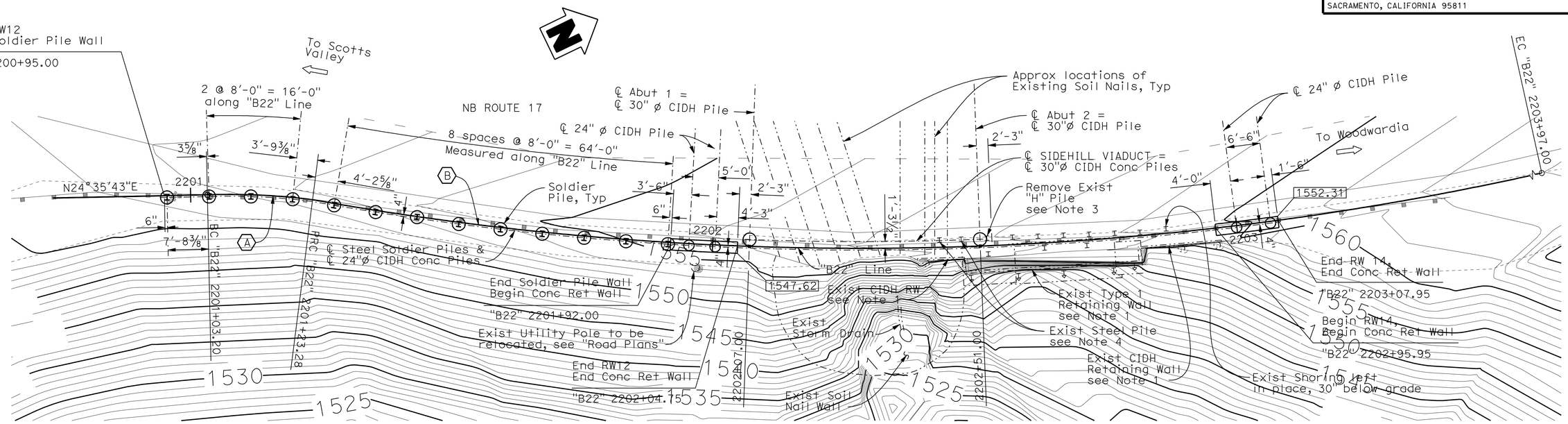

PLAN

1" = 10'

BENCH MARK

PRHV PM10.89 (Not Shown on Sheet)
N= 1870264.357,
E= 6132105.436,
ELEV= 1547.448

PRHV PM11.26 (Not Shown on Sheet)
N= 1872017.310,
E= 6131843.885,
Elev= 1654.88

PILE DATA TABLE (SIDEHILL VIADUCT)

Location	Pile Type	Nominal Resistance		Cutoff Elevation	Design Tip Elevations	Specified Tip Elevations
		Compression	Tension			
Abut 1	30" CIDH	280 kips	0 kips	1551.90	1497.90 (1) 1501.40 (2) 1516.73 (3)	1497.90
Abut 2	30" CIDH	280 kips	0 kips	1553.73	1510.73 (1) 1518.73 (2) 1514.90 (3)	1510.73

Design tip elevations are controlled by (1) Compression, (2) Settlement, (3) Lateral Load, respectively.

PILE DATA TABLE RETAINING WALLS

Station along "B22" Line	Pile No.	Top of Pile Elev	Concrete Cut-off Elev	Bottom of Drilled Hole Elev	Pile Section	Finished Grade Bench Elev
(ft)		(ft)	(ft)	(ft)		(ft)
2200+95.50	1	1550.64	1547.50	1529.39	W12x65	1550.00
2201+03.50	2	1551.10	1547.50	1529.85	W12x65	1550.00
2201+11.50	3	1551.52	1547.50	1530.27	W12x65	1550.00
2201+19.50	4	1551.94	1547.50	1530.69	W12x65	1550.00
2201+27.50	5	1552.24	1547.50	1530.99	W12x65	1550.00
2201+35.50	6	1552.54	1547.50	1531.29	W12x65	1550.50
2201+43.50	7	1552.87	1548.00	1531.62	W12x65	1551.00
2201+51.50	8	1553.25	1548.50	1532.00	W12x65	1551.50
2201+59.50	9	1553.63	1549.00	1532.38	W12x65	1551.75
2201+67.50	10	1553.96	1549.25	1532.71	W12x65	1552.00
2201+75.50	11	1554.29	1549.50	1533.04	W12x65	1553.00
2201+83.50	12	1554.61	1550.50	1533.36	W12x65	1553.00
2201+91.50	13	1554.94	1550.50	1533.69	W12x65	1553.00
2201+95.50	14	1551.55	-	1523.87	24"ø CIDH	1553.25
2202+00.50	15	1551.55	-	1523.87	24"ø CIDH	1553.50
2202+99.95	16	1552.56	-	1528.31	24"ø CIDH	1555.46
2203+06.45	17	1552.56	-	1528.31	24"ø CIDH	1558.25

Note:
The Contractor shall verify all controlling field dimensions before ordering or fabricating any material.

GEOTECHNICAL PROFESSIONAL APPROVAL DATE

DESIGN OVERSIGHT Wei An
SIGN OFF DATE

SCALE: As Shown | VERT.DATUM NAVD 1988 | HORZ.DATUM NAD 1983
PHOTOGRAMMETRY AS OF: X | ALIGNMENT TIES Dist. Traverse Sheet
SURVEYED BY X | DRAFTED BY X
FIELD CHECKED BY X | CHECKED BY X

DESIGN BY T. Dudley CHECKED B. Fish/R. Price
DETAILS BY S. Desalegn CHECKED B. Fish/R. Price
QUANTITIES BY T. Dudley / M. Stiller CHECKED E. Nevarez/S. Desalegn

PREPARED FOR THE STATE OF CALIFORNIA DEPARTMENT OF TRANSPORTATION

Stephen J. Mislinski
PROJECT ENGINEER

BRIDGE NO. 36-0114
POST MILE 10.95

SIDEHILL VIADUCT
FOUNDATION PLAN

DESIGN DETAIL SHEET (ENGLISH) (REV. 2/25/05)

ORIGINAL SCALE IN INCHES FOR REDUCED PLANS 0 1 2 3

CU 05
EA 0L7014

DISREGARD PRINTS BEARING EARLIER REVISION DATES

REVISION DATES (PRELIMINARY STAGE ONLY) 3/30/08 02/04/09 03/16/09 03/16/09 04/23/09 03/29/11 05/05/11 08/04/11

SHEET 5 OF 23

FILE => TBDSHV-c-fdp101.dgn

USERNAME => s119571 DATE PLOTTED => 01-OCT-2012 TIME PLOTTED => 08:35

DIST	COUNTY	ROUTE	POST MILES TOTAL PROJECT	SHEET No	TOTAL SHEETS
05	SCr	17	6.0/12.6	267	284

REGISTERED CIVIL ENGINEER 8/4/11 DATE

9-24-12
PLANS APPROVAL DATE

REGISTERED PROFESSIONAL ENGINEER T. Dudley No. C039514 Exp. 12/31/11 CIVIL STATE OF CALIFORNIA

The State of California or its officers or agents shall not be responsible for the accuracy or completeness of electronic copies of this plan sheet.

AECOM TECHNICAL SERVICES, INC.
2020 L STREET, SUITE 300
SACRAMENTO, CALIFORNIA 95811

Note:
Bundled bars are indicated thus

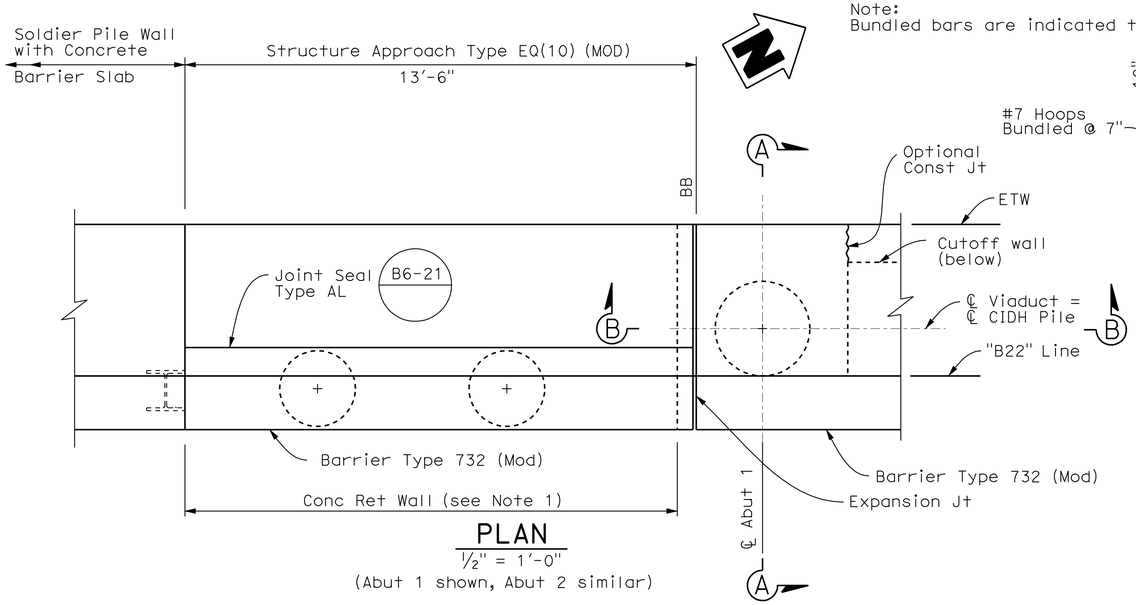

PLAN
½" = 1'-0"
(Abut 1 shown, Abut 2 similar)

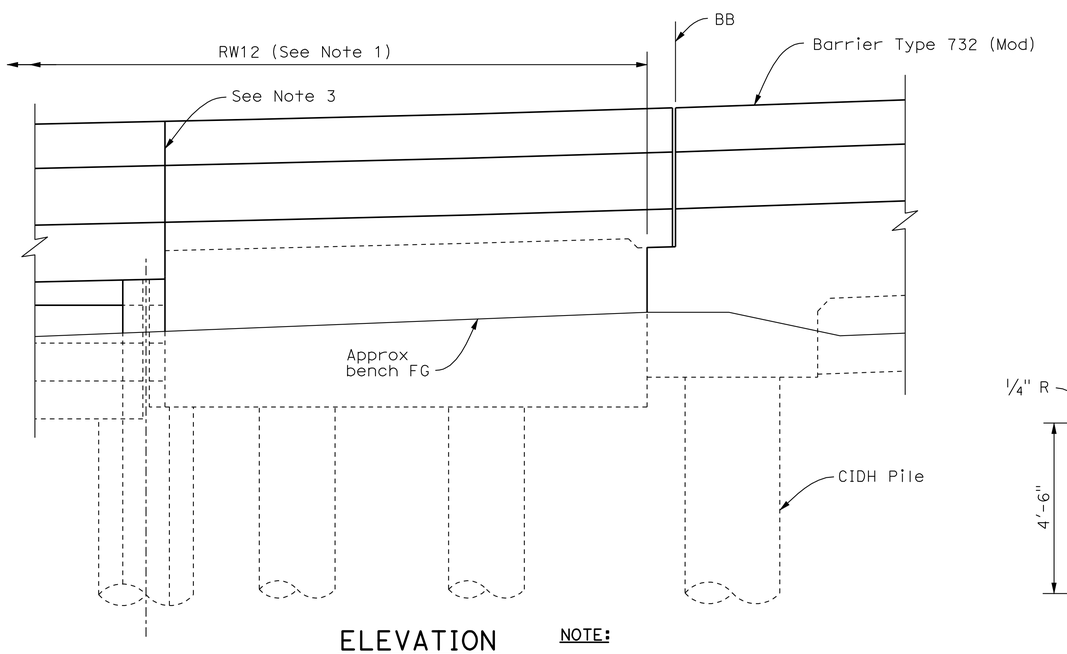

ELEVATION
½" = 1'-0"

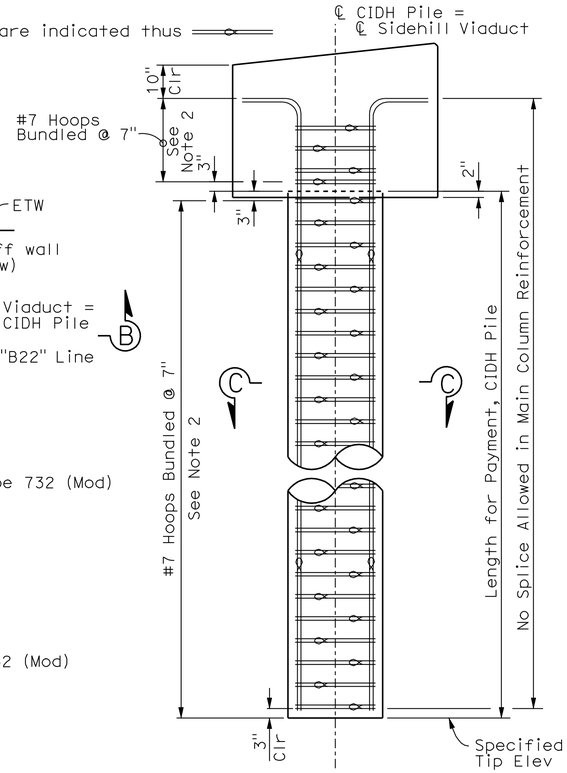

30"Ø CIDH PILE ELEVATION
½" = 1'-0"

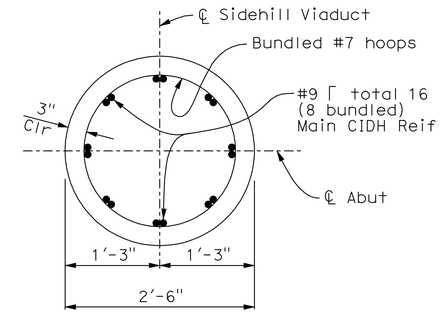

SECTION C-C
1" = 1'-0"

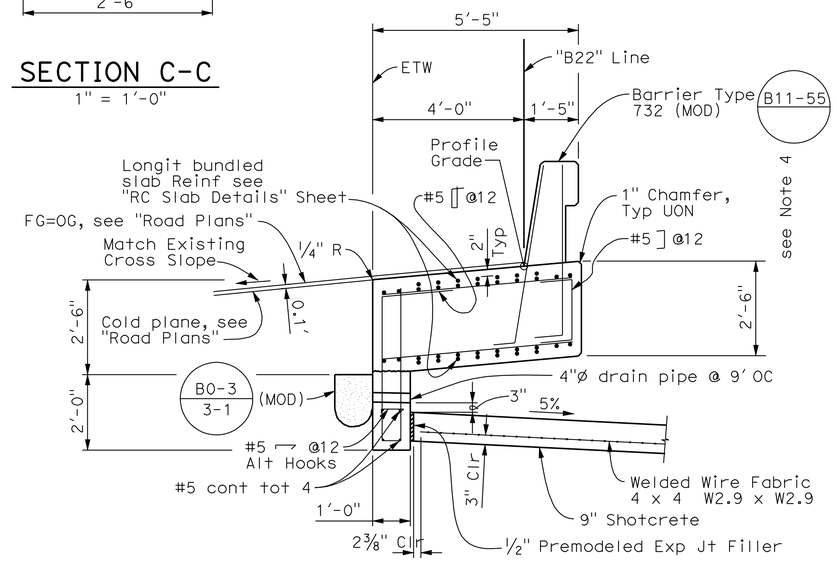

TYPICAL SECTION
½ " = 1'-0"

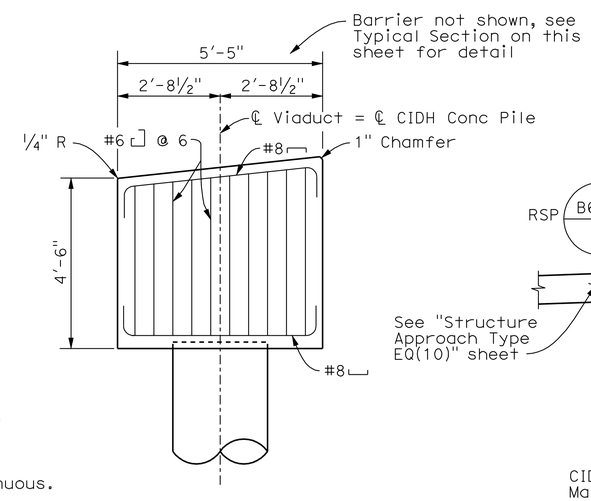

SECTION A-A
½" = 1'-0"

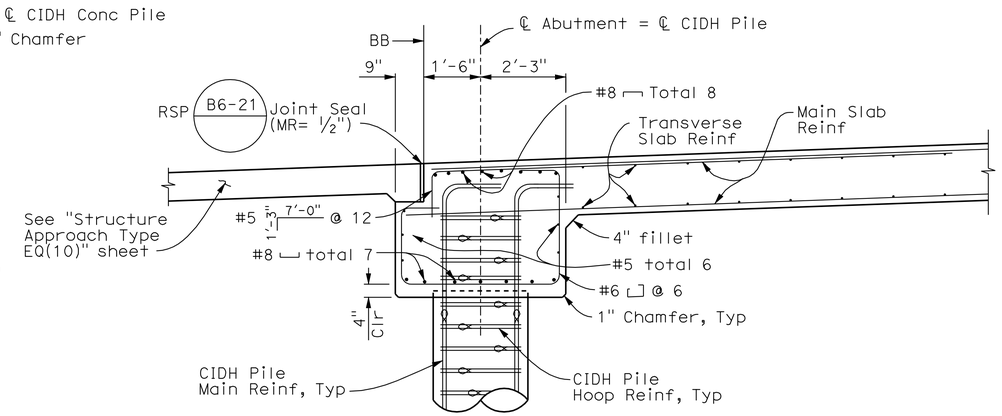

SECTION B-B
½" = 1'-0"

Note:
The Contractor shall verify all controlling field dimensions before ordering or fabricating any material.

NOTE:

1. For Concrete Retaining Wall details see "Retaining Wall Structure Plan" and "Retaining Wall Details" sheets.
2. All hoops "ultimate" butt spliced continuous.
3. Longitudinal reinforcement for barrier shall be continuous through joint.

DESIGN OVERSIGHT Wei An	DESIGN	BY T. Dudley	CHECKED B. Fish
	DETAILS	BY S. Desalegn	CHECKED B. Fish
SIGN OFF DATE	QUANTITIES	BY T. Dudley / M. Stiller	CHECKED E. Nevarez/S. Desalegn

PREPARED FOR THE STATE OF CALIFORNIA DEPARTMENT OF TRANSPORTATION

PROJECT ENGINEER

BRIDGE NO. 36-0114
POST MILE 10.95

SIDEHILL VIADUCT
ABUTMENT DETAILS

DESIGN DETAIL SHEET (ENGLISH) (REV. 2/25/05)

ORIGINAL SCALE IN INCHES FOR REDUCED PLANS 0 1 2 3

CU 05
EA 0L7014

DISREGARD PRINTS BEARING EARLIER REVISION DATES

REVISION DATES (PRELIMINARY STAGE ONLY) 9/30/08 02/04/09 03/30/09 03/26/09 04/23/09 03/29/11 05/23/11 08/04/11

SHEET 6 OF 23

FILE => TBDSHV-d-abtdet01.dgn

USERNAME => s113571 DATE PLOTTED => 01-OCT-2012 TIME PLOTTED => 08:35

DIST	COUNTY	ROUTE	POST MILES TOTAL PROJECT	SHEET No	TOTAL SHEETS
05	SCr	17	6.0/12.6	268	284

REGISTERED CIVIL ENGINEER 8/4/11 DATE

9-24-12
PLANS APPROVAL DATE

REGISTERED PROFESSIONAL ENGINEER T. Dudley No. C039514 Exp. 12/31/11 CIVIL STATE OF CALIFORNIA

The State of California or its officers or agents shall not be responsible for the accuracy or completeness of electronic copies of this plan sheet.

AECOM TECHNICAL SERVICES, INC.
2020 L STREET, SUITE 300
SACRAMENTO, CALIFORNIA 95811

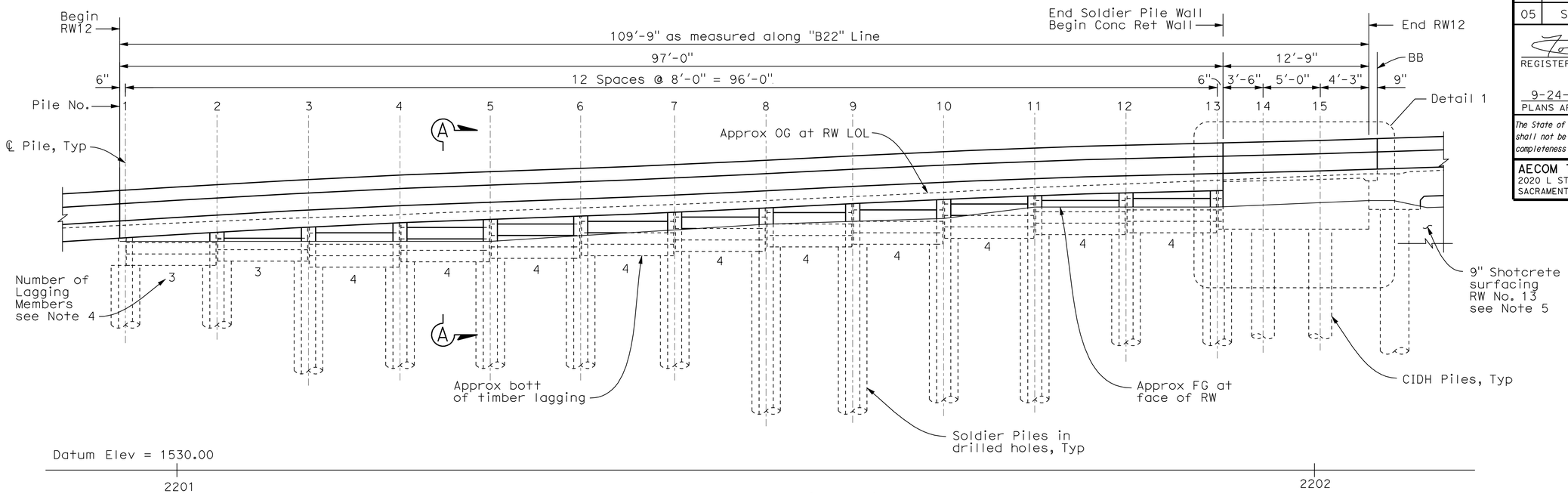

ELEVATION (RW12)

1" = 5'

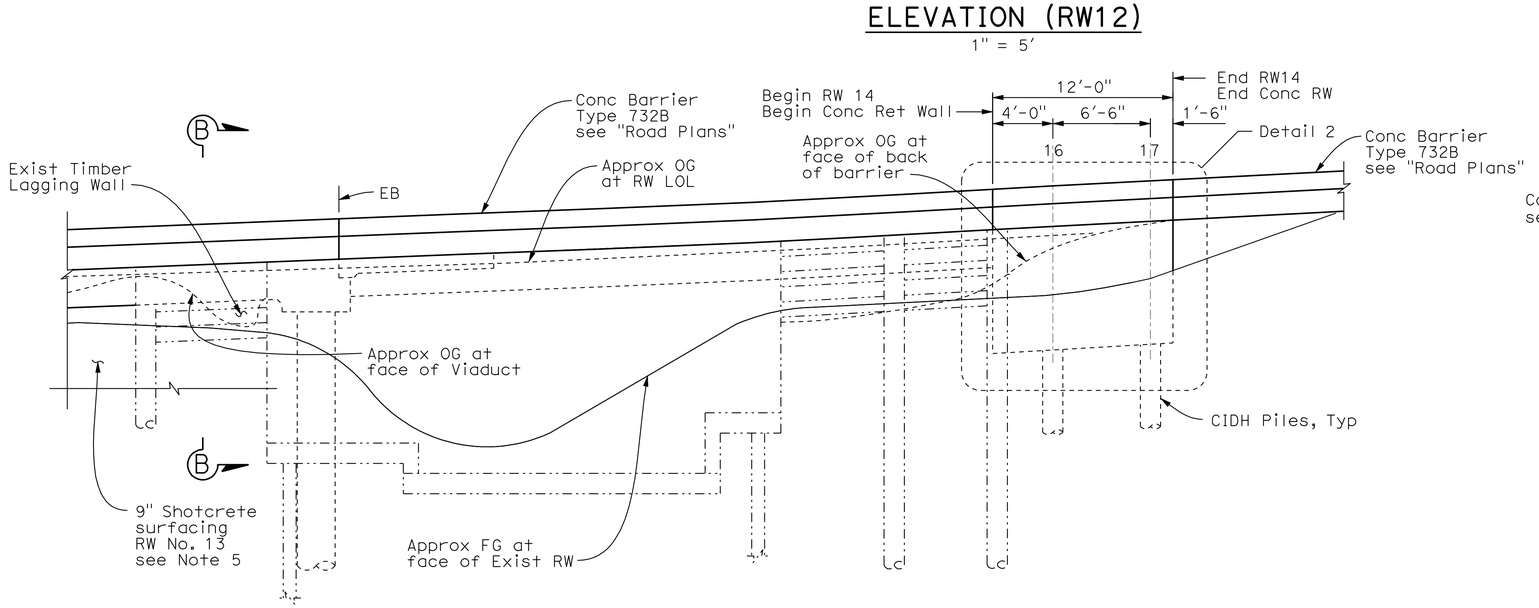

ELEVATION (RW14)

1" = 5'

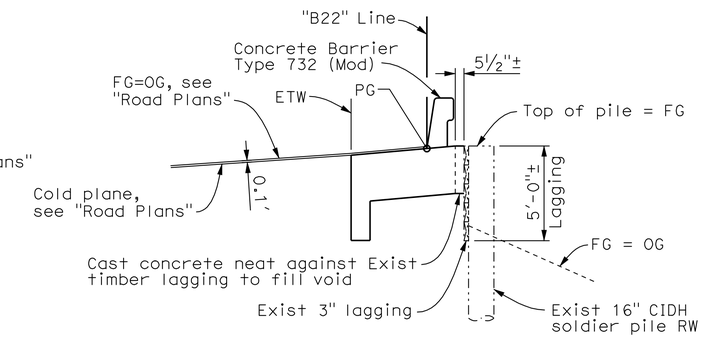

SECTION B-B

¼" = 1'-0"

NOTES:

1. For Typical Sections and Notes, see "General Plan No. 2" sheet.
2. For Section A-A, see "Retaining Wall Details No. 1" sheet.
3. For Details 1 and 2, see "Retaining Wall Details No. 3" sheet.
4. Number of lagging members shown are approximate only. Contractor shall place lagging as needed to provide required embedment below FG.
5. For Retaining Wall No. 13 see "RW No. 13 Soil Nail Wall Details" sheet.

Note:
The Contractor shall verify all controlling field dimensions before ordering or fabricating any material.

DESIGN OVERSIGHT Wei An	DESIGN	BY T. Dudley	CHECKED B. Fish/R. Price
SIGN OFF DATE	DETAILS	BY S. Desalegn	CHECKED B. Fish/R. Price
	QUANTITIES	BY T. Dudley/M. Stiller	CHECKED E. Nevarez/S. Desalegn

PREPARED FOR THE STATE OF CALIFORNIA DEPARTMENT OF TRANSPORTATION

Stephen J. Mislinski
PROJECT ENGINEER

BRIDGE NO. 36-0114
POST MILE 10.95

SIDEHILL VIADUCT
RETAINING WALL STRUCTURE PLAN

DESIGN DETAIL SHEET (ENGLISH) (REV. 2/25/05)

ORIGINAL SCALE IN INCHES FOR REDUCED PLANS 0 1 2 3

CU 05
EA 0L7014

DISREGARD PRINTS BEARING EARLIER REVISION DATES

REVISION DATES (PRELIMINARY STAGE ONLY) 9/30/08 02/04/09 03/10/09 03/16/09 04/23/09 03/25/11 05/23/11 08/04/11

SHEET 7 OF 23

FILE => TBDSHV-e-rwsp01.dgn

USERNAME => s119571 DATE PLOTTED => 01-OCT-2012 TIME PLOTTED => 08:36

DIST	COUNTY	ROUTE	POST MILES TOTAL PROJECT	SHEET No	TOTAL SHEETS
05	SCr	17	6.0/12.6	269	284

REGISTERED CIVIL ENGINEER 8/4/11 DATE

9-24-12
PLANS APPROVAL DATE

REGISTERED PROFESSIONAL ENGINEER T. Dudley No. C039514 Exp. 12/31/11 CIVIL STATE OF CALIFORNIA

The State of California or its officers or agents shall not be responsible for the accuracy or completeness of electronic copies of this plan sheet.

AECOM TECHNICAL SERVICES, INC.
2020 L STREET, SUITE 300
SACRAMENTO, CALIFORNIA 95811

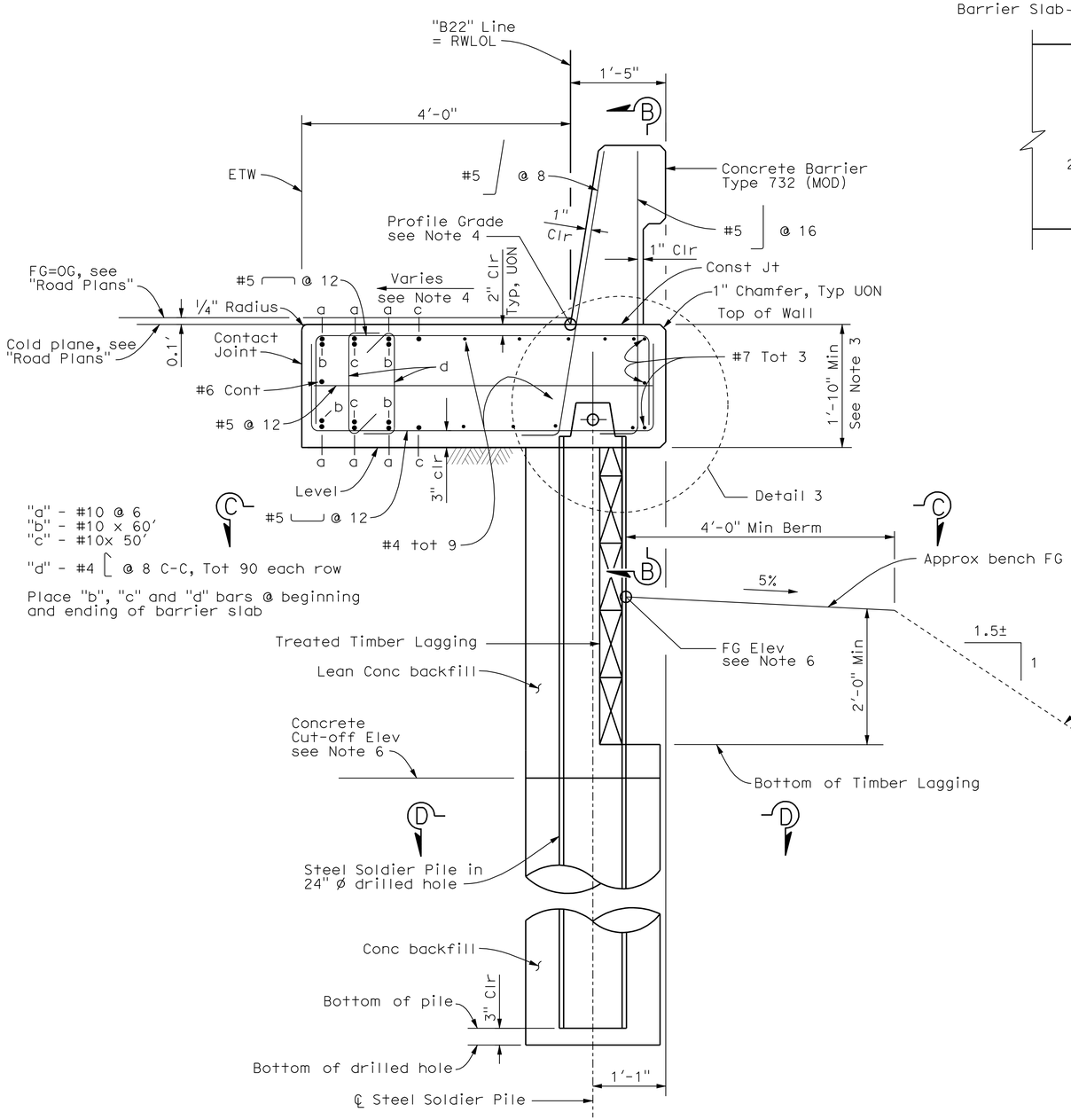

SECTION A-A

1" = 1'-0"

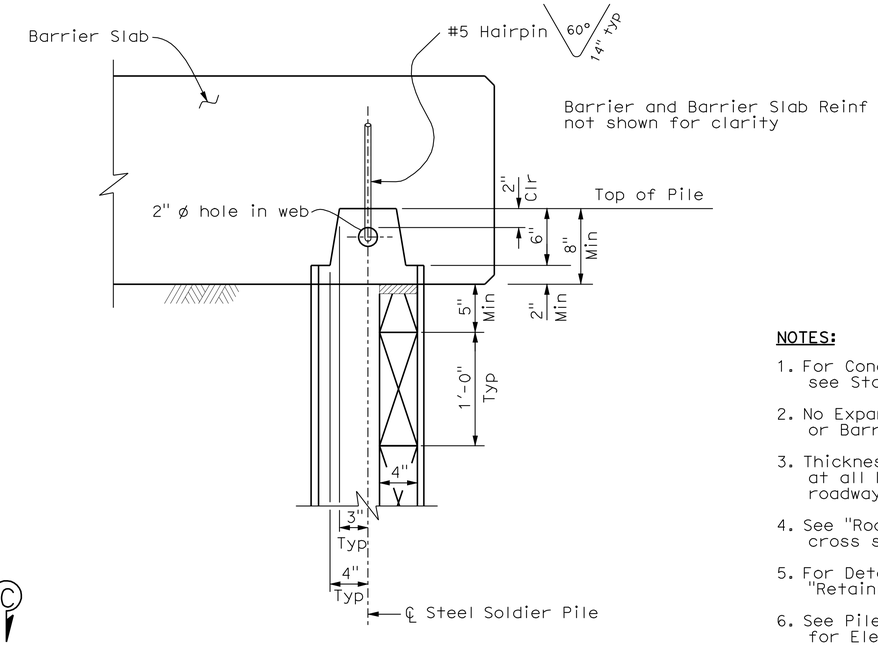

DETAIL 3
STEEL PILE ANCHOR

1½" = 1'-0"

NOTES:

1. For Concrete Barrier Details not shown, see Standard Plan B11-55.
2. No Expansion Joints in Concrete Barrier or Barrier Slab within Length of Wall.
3. Thickness of barrier slab to be 1'-10" min at all locations including allowances for roadway cross slopes.
4. See "Road Plans" for roadway Profile and cross slope details.
5. For Detail 4, Section C-C and D-D see "Retaining Wall Details No. 2" sheet.
6. See Pile Data Table on "Foundation Plan" sheet for Elevations not shown.

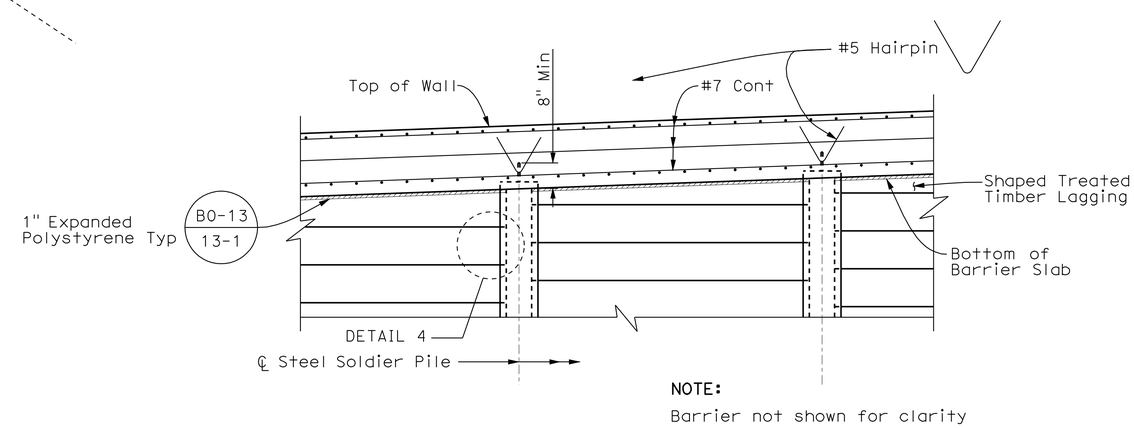

NOTE:
Barrier not shown for clarity

SECTION B-B

½" = 1'-0"

Note:
The Contractor shall verify all controlling field dimensions before ordering or fabricating any material.

DESIGN OVERSIGHT Wei An	DESIGN	BY T. Dudley	CHECKED R. Price
SIGN OFF DATE	DETAILS	BY S. Desalegn	CHECKED R. Price
	QUANTITIES	BY T. Dudley	CHECKED E. Nevarez

PREPARED FOR THE STATE OF CALIFORNIA DEPARTMENT OF TRANSPORTATION

Stephen J. Mislinski
PROJECT ENGINEER

BRIDGE NO. 36-0114
POST MILE 10.95

SIDEHILL VIADUCT
RETAINING WALL DETAILS NO. 1

DESIGN DETAIL SHEET (ENGLISH) (REV. 2/25/05)

ORIGINAL SCALE IN INCHES FOR REDUCED PLANS 0 1 2 3

CU 05
EA 0L7014

DISREGARD PRINTS BEARING EARLIER REVISION DATES

REVISION DATES (PRELIMINARY STAGE ONLY) 9/30/08 02/04/09 03/30/09 03/05/09 04/13/09 03/25/11 05/23/11 08/04/11

SHEET 8 OF 23

FILE => TBDSHV-h-rwdet01.dgn

USERNAME => s119571 DATE PLOTTED => 01-OCT-2012 TIME PLOTTED => 08:36

DIST	COUNTY	ROUTE	POST MILES TOTAL PROJECT	SHEET No	TOTAL SHEETS
05	SCr	17	6.0/12.6	270	284

REGISTERED CIVIL ENGINEER 8/4/11 DATE

9-24-12
PLANS APPROVAL DATE

REGISTERED PROFESSIONAL ENGINEER T. Dudley No. C039514 Exp. 12/31/11 CIVIL STATE OF CALIFORNIA

The State of California or its officers or agents shall not be responsible for the accuracy or completeness of electronic copies of this plan sheet.

AECOM TECHNICAL SERVICES, INC.
2020 L STREET, SUITE 300
SACRAMENTO, CALIFORNIA 95811

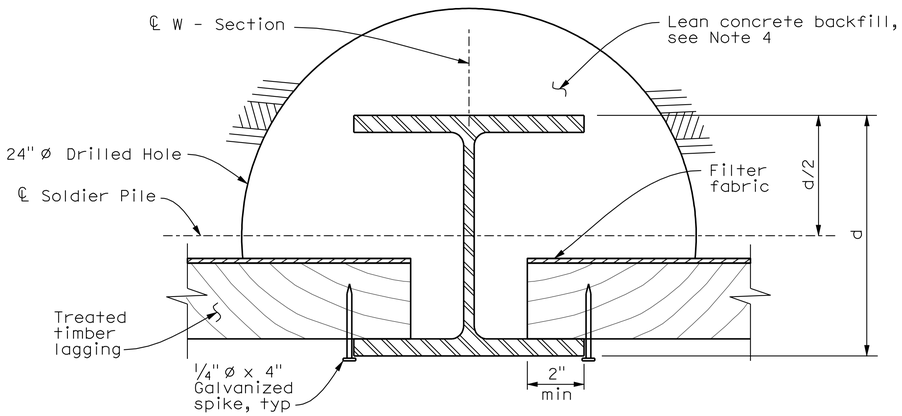

AT INTERIOR SOLDIER PILE SECTION C-C

3" = 1-0"

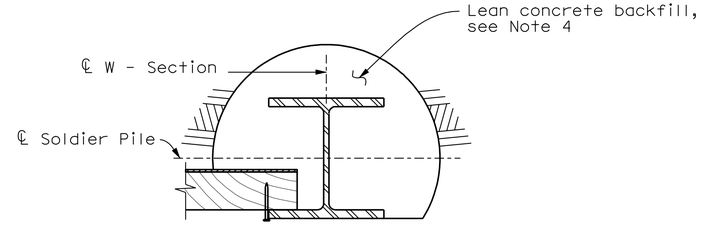

AT EXTERIOR SOLDIER PILE SECTION C-C

1½" = 1-0"

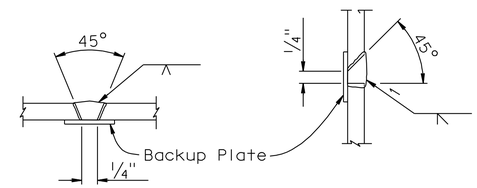

SINGLE VEE-GROOVE SINGLE BEVEL-GROOVE

PILE WELDING DETAIL-BUTT JOINTS

Notes:
1. Single Vee-Groove and Square Groove Permitted for all positions.
2. Single Bevel-Groove permitted for horizontal joints only

NOTE:
For Details not shown, see "Retaining Wall Details No. 1" sheet

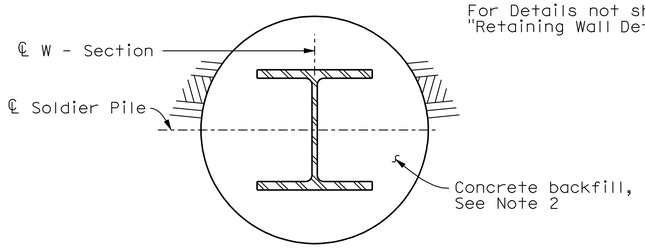

SECTION D-D

1½" = 1-0"

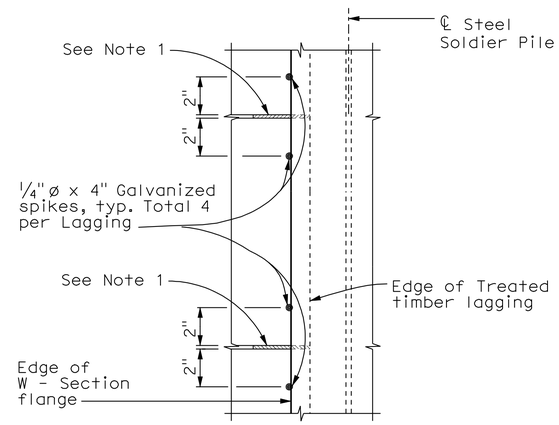

DETAIL 4

1½" = 1-0"

Notes:

1. ⅜" x 6" High Density Polyethylene (HDPE) shim between lagging members secured with 2 -¼" dia. galv. commercial wire nails typical width of shim to match width of timber lagging.
2. For Limits of Concrete Backfill, see "General Notes No. 2" sheet.
3. Diagonally opposite corners of lagging members may be cut to facilitate placement.
4. Remove portion of lean concrete backfill as necessary for placement of lagging and filter fabric.

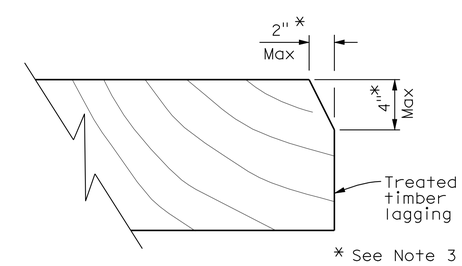

PART ELEVATION OF LAGGING MEMBER

No Scale

Note:
The Contractor shall verify all controlling field dimensions before ordering or fabricating any material.

DESIGN OVERSIGHT Wei An	DESIGN	BY T. Dudley	CHECKED R. Price
SIGN OFF DATE	DETAILS	BY S. Desalegn	CHECKED R. Price
	QUANTITIES	BY T. Dudley	CHECKED E. Nevarez

PREPARED FOR THE STATE OF CALIFORNIA DEPARTMENT OF TRANSPORTATION

Stephen J. Mislinski
PROJECT ENGINEER

BRIDGE NO. 36-0114
POST MILE 10.95

SIDEHILL VIADUCT
RETAINING WALL DETAILS NO. 2

DESIGN DETAIL SHEET (ENGLISH) (REV. 2/25/05)

ORIGINAL SCALE IN INCHES FOR REDUCED PLANS 0 1 2 3

CU 05
EA 0L7014

DISREGARD PRINTS BEARING EARLIER REVISION DATES

REVISION DATES (PRELIMINARY STAGE ONLY) 9/30/08 02/04/09 03/30/09 03/26/09 04/23/09 03/29/11 05/23/11 08/04/11

SHEET 9 OF 23

FILE => TBDSHV-h-rwdet02.dgn

USERNAME => s613571 DATE PLOTTED => 01-OCT-2012 TIME PLOTTED => 08:36

DIST	COUNTY	ROUTE	POST MILES TOTAL PROJECT	SHEET No	TOTAL SHEETS
05	SCr	17	6.0/12.6	271	284

REGISTERED CIVIL ENGINEER 8/4/11 DATE

9-24-12
PLANS APPROVAL DATE

REGISTERED PROFESSIONAL ENGINEER T. Dudley No. C039514 Exp. 12/31/11 CIVIL STATE OF CALIFORNIA

The State of California or its officers or agents shall not be responsible for the accuracy or completeness of electronic copies of this plan sheet.

AECOM TECHNICAL SERVICES, INC.
2020 L STREET, SUITE 300
SACRAMENTO, CALIFORNIA 95811

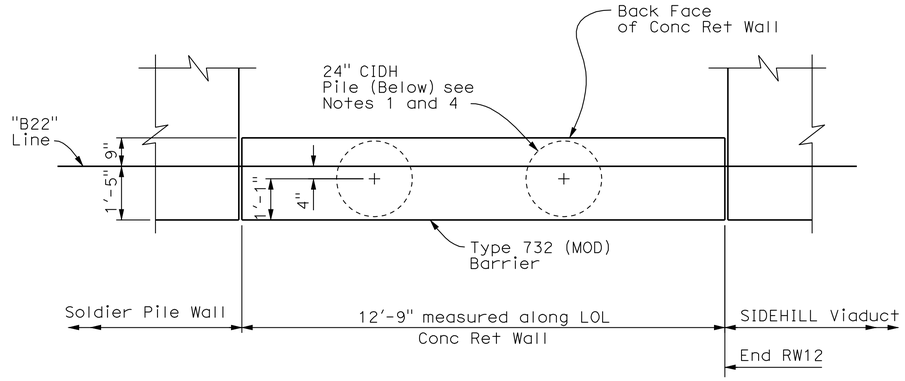

DEVELOPED SECTION A-A

½" = 1'-0"

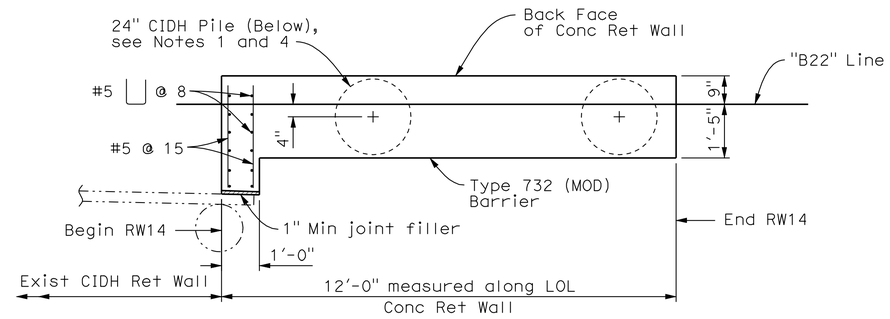

DEVELOPED SECTION B-B

½" = 1'-0"

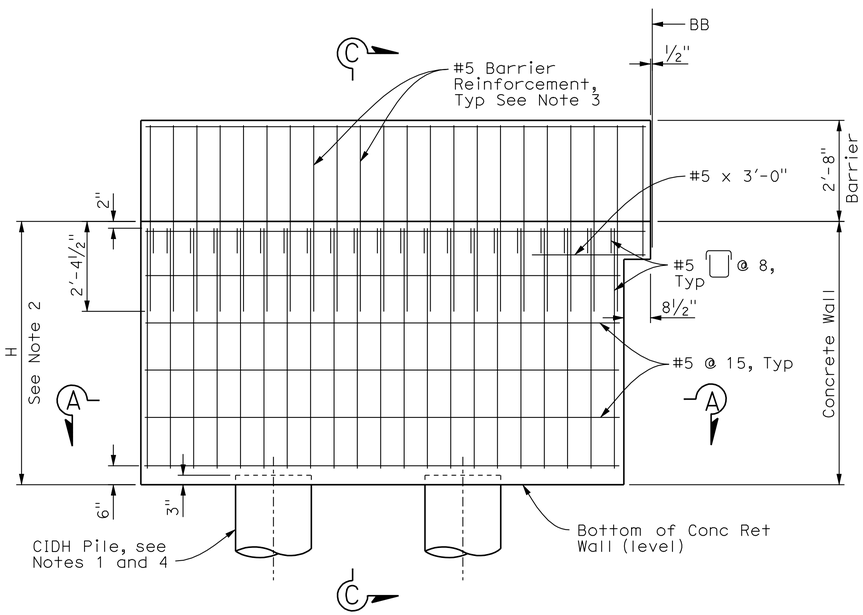

DETAIL 1

½" = 1'-0"

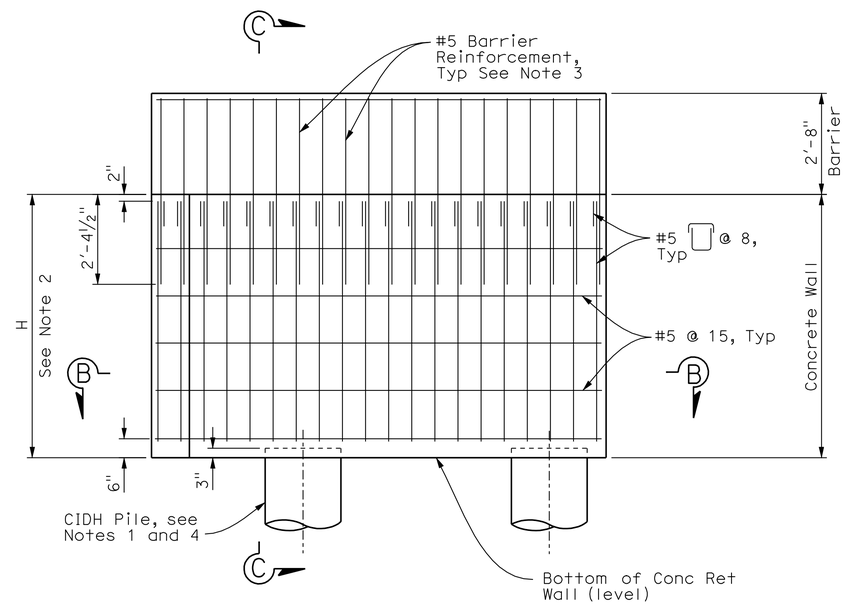

DETAIL 2

½" = 1'-0"

NOTES:

1. For pile spacing, see "Retaining Wall Structure Plan" sheet.
2. Dimension varies. Elevations to be set based on existing elevations and cross slope shown in structure plans. See "Road Plans" for additional roadway profile and cross slope details.
3. For Barrier Reinforcement not shown, see Standard Plan B11-55.
4. For CIDH Pile details and Section C-C, see "Retaining Wall Details No. 4" sheet.

Note:
The Contractor shall verify all controlling field dimensions before ordering or fabricating any material.

DESIGN OVERSIGHT Wei An
SIGN OFF DATE

	BY	CHECKED
DESIGN	T. Dudley	R. Price
DETAILS	S. Desalegn	R. Price
QUANTITIES	T. Dudley	E. Nevarez

PREPARED FOR THE STATE OF CALIFORNIA DEPARTMENT OF TRANSPORTATION

Stephen J. Mislinski
PROJECT ENGINEER

BRIDGE NO. 36-0114
POST MILE 10.95

SIDEHILL VIADUCT
RETAINING WALL DETAILS NO. 3

DESIGN DETAIL SHEET (ENGLISH) (REV. 2/25/05)

ORIGINAL SCALE IN INCHES FOR REDUCED PLANS 0 1 2 3

CU 05
EA 0L7014

DISREGARD PRINTS BEARING EARLIER REVISION DATES

REVISION DATES (PRELIMINARY STAGE ONLY) 9/30/08 02/04/09 03/30/09 03/26/09 04/23/09 03/25/11 05/23/11 08/04/11

SHEET 10 OF 23

FILE => TBDSHV-h-rwdet03.dgn

USERNAME => s119571 DATE PLOTTED => 01-OCT-2012 TIME PLOTTED => 08:36

DIST	COUNTY	ROUTE	POST MILES TOTAL PROJECT	SHEET No	TOTAL SHEETS
05	SCr	17	6.0/12.6	272	284

REGISTERED CIVIL ENGINEER 8/4/11 DATE

9-24-12
PLANS APPROVAL DATE

REGISTERED PROFESSIONAL ENGINEER T. Dudley No. C039514 Exp. 12/31/11 CIVIL STATE OF CALIFORNIA

The State of California or its officers or agents shall not be responsible for the accuracy or completeness of electronic copies of this plan sheet.

AECOM TECHNICAL SERVICES, INC.
2020 L STREET, SUITE 300
SACRAMENTO, CALIFORNIA 95811

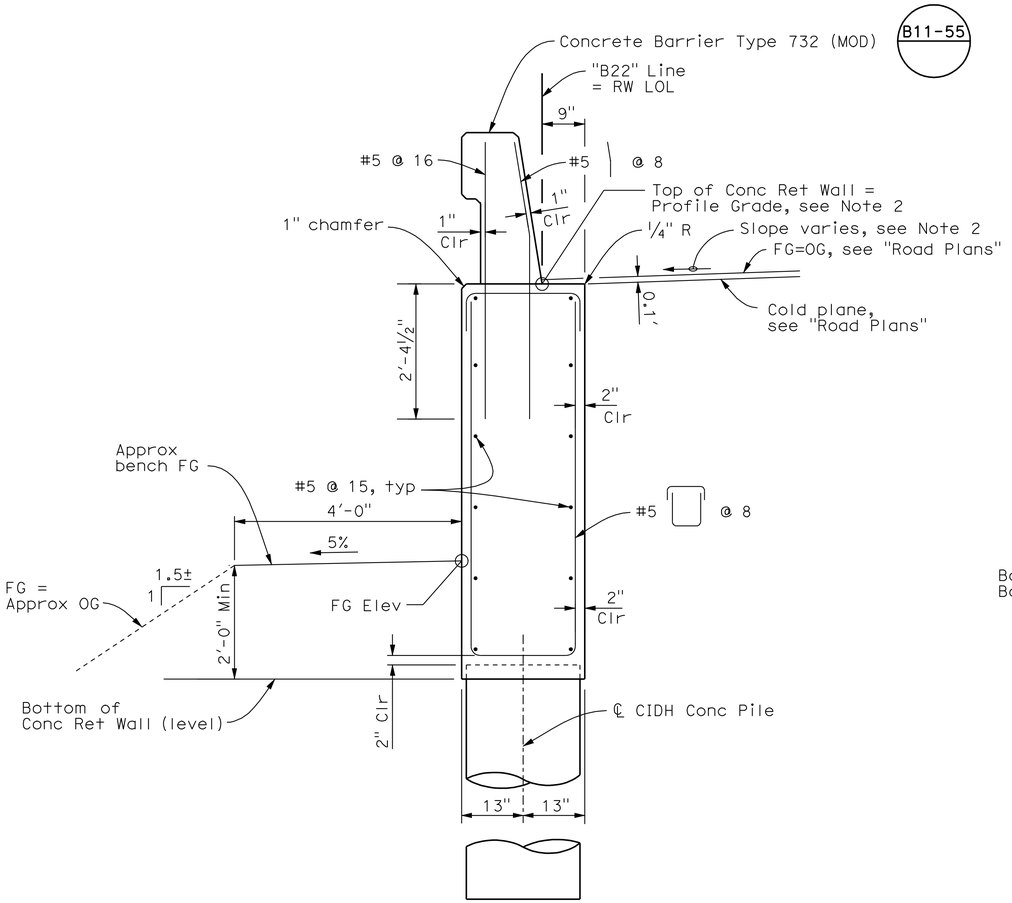

SECTION C-C
3/4" = 1'-0"

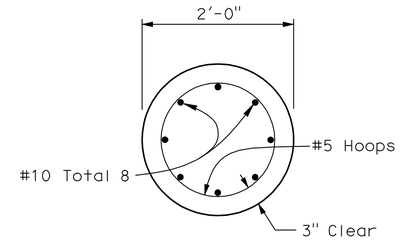

SECTION A-A
1" = 1'-0"

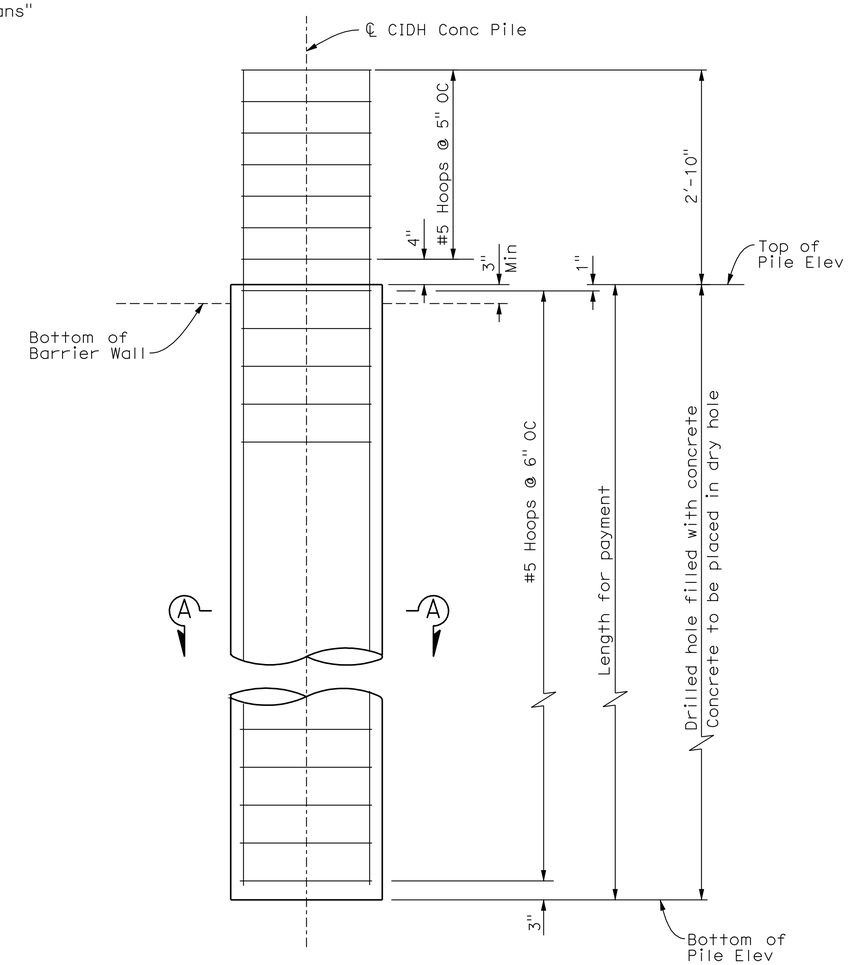

24"ø CIDH PILE ELEVATION
1" = 1'-0"

NOTES:

1. All hoops "ultimate" butt splice continuous.
2. See "Road Plans" for additional roadway profile and cross slope details.

Note:
The Contractor shall verify all controlling field dimensions before ordering or fabricating any material.

DESIGN OVERSIGHT Wei An
SIGN OFF DATE

	BY	CHECKED
DESIGN	T. Dudley	R. Price
DETAILS	S. Desalegn	R. Price
QUANTITIES	T. Dudley	E. Nevarez

PREPARED FOR THE STATE OF CALIFORNIA DEPARTMENT OF TRANSPORTATION

Stephen J. Mislinski
PROJECT ENGINEER

BRIDGE NO. 36-0114
POST MILE 10.95

SIDEHILL VIADUCT
RETAINING WALL DETAILS NO. 4

DESIGN DETAIL SHEET (ENGLISH) (REV. 2/25/05)

ORIGINAL SCALE IN INCHES FOR REDUCED PLANS 0 1 2 3

CU 05
EA 0L7014

DISREGARD PRINTS BEARING EARLIER REVISION DATES

REVISION DATES (PRELIMINARY STAGE ONLY) 9/30/08 02/04/09 03/30/09 03/26/09 04/23/09 03/25/11 05/20/11 08/04/11

SHEET 11 OF 23

FILE => TBDSHV-h-rwdet04.dgn

USERNAME => s119571 DATE PLOTTED => 01-OCT-2012 TIME PLOTTED => 08:36

DIST	COUNTY	ROUTE	POST MILES TOTAL PROJECT	SHEET No	TOTAL SHEETS
05	SCr	17	6.0/12.6	273	284

REGISTERED CIVIL ENGINEER 8/4/11 DATE

9-24-12
PLANS APPROVAL DATE

REGISTERED PROFESSIONAL ENGINEER T. Dudley No. C039514 Exp. 12/31/11 CIVIL STATE OF CALIFORNIA

The State of California or its officers or agents shall not be responsible for the accuracy or completeness of electronic copies of this plan sheet.

AECOM TECHNICAL SERVICES, INC.
2020 L STREET, SUITE 300
SACRAMENTO, CALIFORNIA 95811

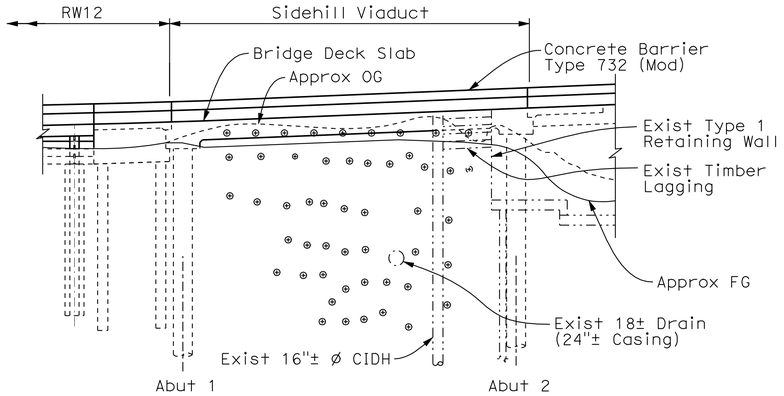

EXISTING SOIL NAILS ELEVATION

1" = 10'

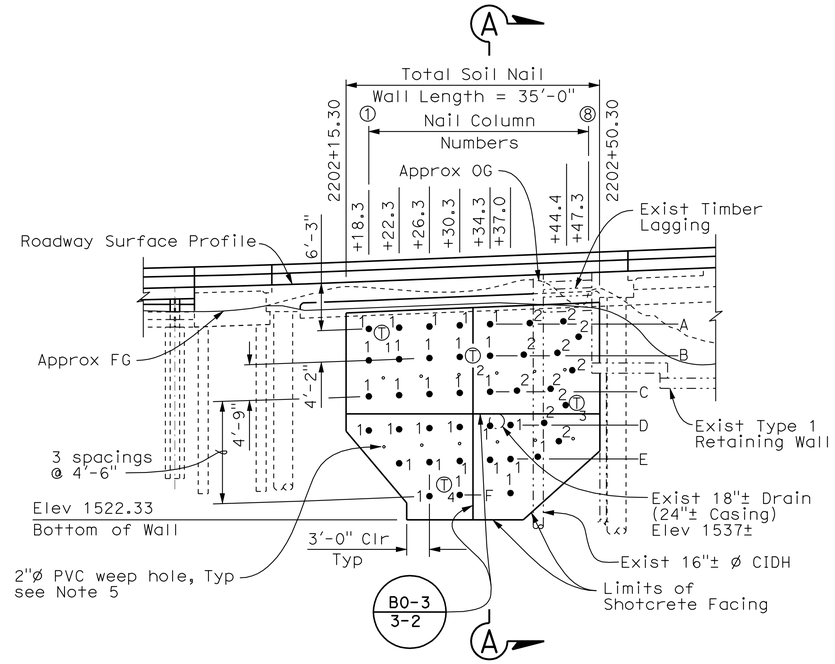

NEW SOIL NAILS ELEVATION

1" = 10'

LEGEND:

- 1• Soil Nail Location and installation alignment
- ⊗ Exist Soil Nail Location
- (T)1 Test Soil Nail Location and Number
- A Soil Nail Row Designation
- ▨ Exist Shotcrete Surface to be removed, see Note 3

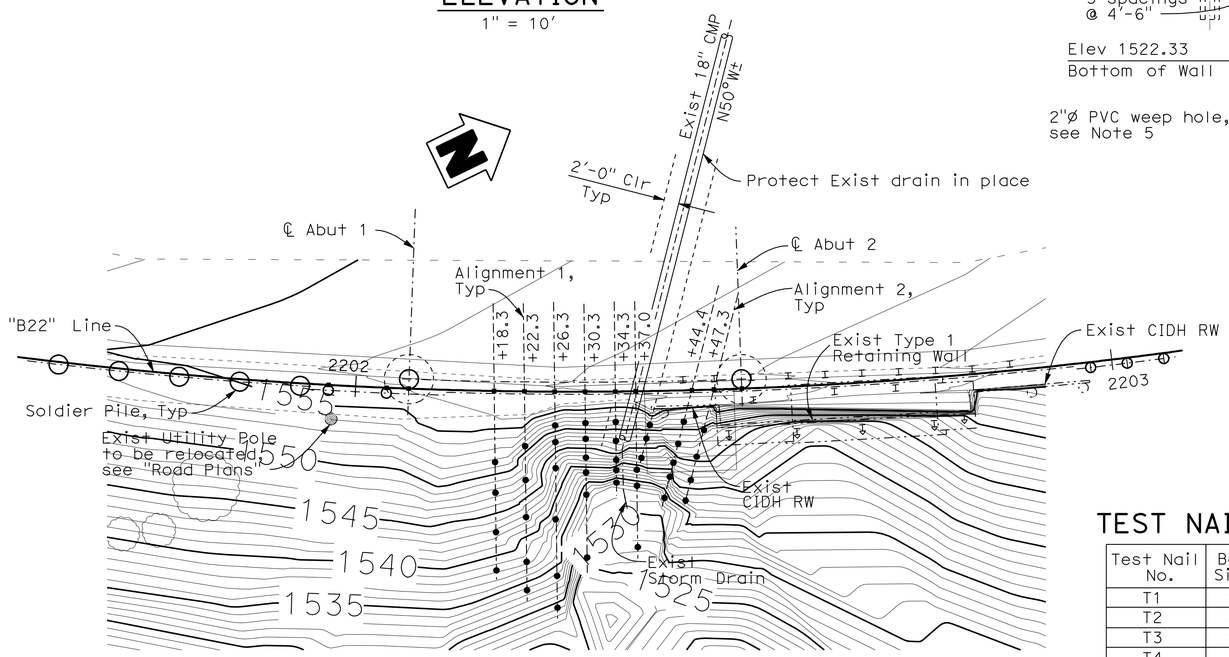

PLAN

1" = 10'

• Indicates Soil Nail

TEST NAIL SCHEDULE

Test Nail No.	Bar Size	Embed Length (LE) FT
T1	8	27
T2	8	27
T3	8	27
T4	8	27

ALIGNMENT

1	N 65° W
2	N 50° W

SOIL NAIL SCHEDULE

Embedment Length (ft)	Row **	Nail Column 1	2	3	4	5	6	7	8*
40	A	1	1	1	1	1	2	2	2
40	B	1	1	1	1	1	2	2	2
40	C	1	1	1	1	1	2	2	2
40	D	1	1	1	1	1	1	2	2
40	E		1	1	1	1	1	1	
40	F			1	1		1		

* See Note 2 ** See Note 1 Table entries identify Soil Nail alignment

Note:
The Contractor shall verify all controlling field dimensions before ordering or fabricating any material.

Notes:

1. Soil nail rows are measured from roadway surface profile. See elevation for vertical dimensions.
2. Soil nails in Column 8 are to be placed midway between adjacent rows in column 7.
3. Remove interfering portions of existing shotcrete surface and soil nails, as Remove Retaining Wall (Portion), Location "C".
4. Two layers of 4" x 4", W3 x W3 welded wire fabric to be placed as shown on "Soil Nail Details" sheet.
5. Place weep holes in rows as shown. For placement details, see "Soil Nail Details" sheet.

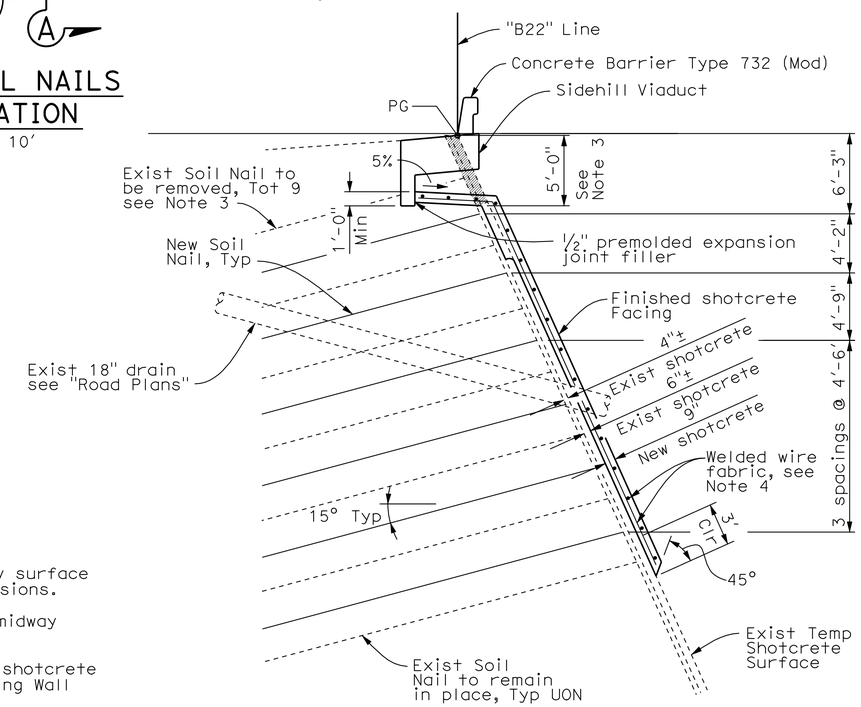

SECTION A-A

3/16" = 1'-0"

DESIGN OVERSIGHT	Wei An
SIGN OFF DATE	

	BY	CHECKED
DESIGN	T. Dudley	B. Fish
DETAILS	S. Desalegn	B. Fish
QUANTITIES	T. Dudley	E. Nevarez

PREPARED FOR THE STATE OF CALIFORNIA DEPARTMENT OF TRANSPORTATION

Stephen J. Mislinski
PROJECT ENGINEER

BRIDGE NO. 36-0114
POST MILE 10.95

SIDEHILL VIADUCT
RW NO. 13 SOIL NAIL WALL DETAILS

DESIGN DETAIL SHEET (ENGLISH) (REV. 2/25/05)

ORIGINAL SCALE IN INCHES FOR REDUCED PLANS 0 1 2 3

CU 05
EA 0L7014

DISREGARD PRINTS BEARING EARLIER REVISION DATES

REVISION DATES (PRELIMINARY STAGE ONLY) 9/30/08 02/04/09 03/16/09 03/16/09 04/23/09 03/29/11 05/05/11 08/04/11

SHEET 12 OF 23

FILE => TBDSHV-k-swdet01.dgn

USERNAME => s12614 DATE PLOTTED => 02-OCT-2012 TIME PLOTTED => 06:11

DIST	COUNTY	ROUTE	POST MILES TOTAL PROJECT	SHEET No	TOTAL SHEETS
05	SCr	17	6.0/12.6	274	284

REGISTERED CIVIL ENGINEER 8/4/11 DATE

9-24-12
PLANS APPROVAL DATE

REGISTERED PROFESSIONAL ENGINEER T. Dudley No. C039514 Exp. 12/31/11 CIVIL STATE OF CALIFORNIA

The State of California or its officers or agents shall not be responsible for the accuracy or completeness of electronic copies of this plan sheet.

AECOM TECHNICAL SERVICES, INC.
2020 L STREET, SUITE 300
SACRAMENTO, CALIFORNIA 95811

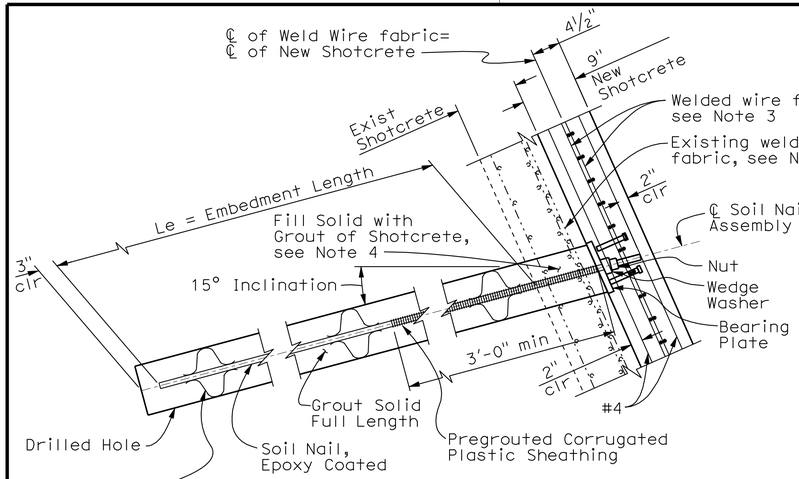

PRODUCTION SOIL NAIL ASSEMBLY

1"=1'-0"

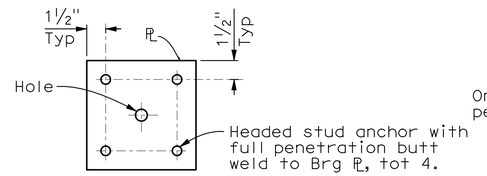

Nail Bar Size	Plate Size	Stud Anchor
#8	9" SQ x 1½"	¾" Ø x 5" with 1¼" Ø x ⅜" head

BEARING PLATE DETAIL

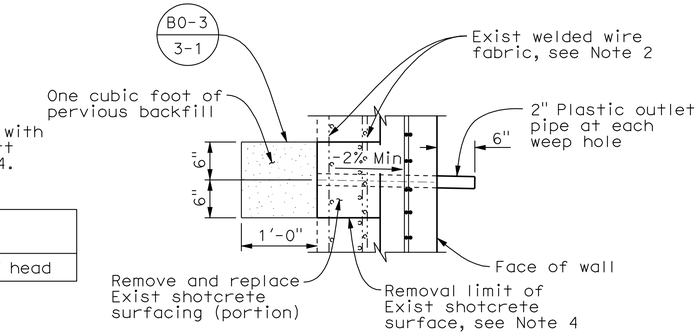

SECTION A-A

1"=1'-0"

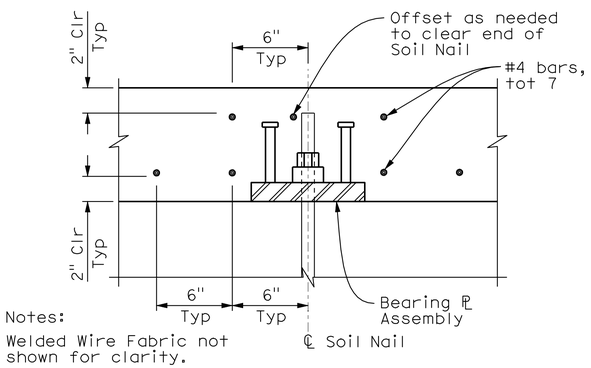

Notes:
Welded Wire Fabric not shown for clarity.

SECTION B-B

2"=1'-0"

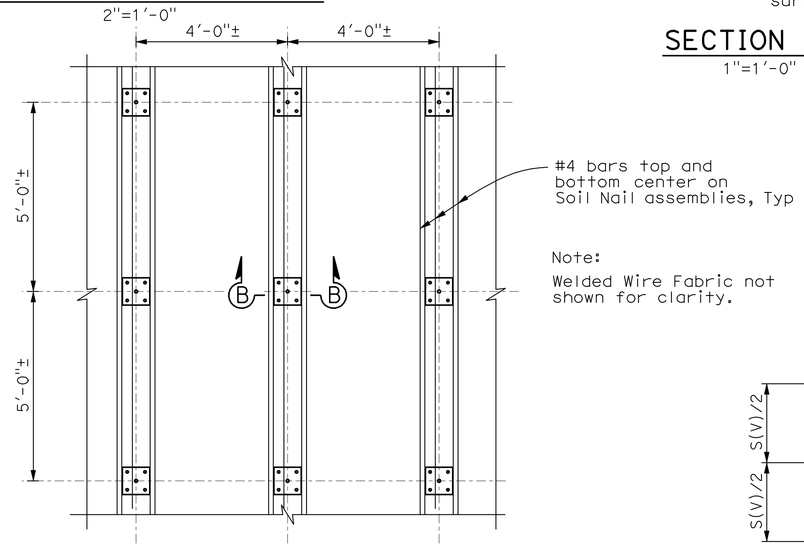

Note:
Welded Wire Fabric not shown for clarity.

PART ELEVATION
SHOTCRETE REINFORCEMENT DETAIL

½"=1'-0" SEE NOTE 5

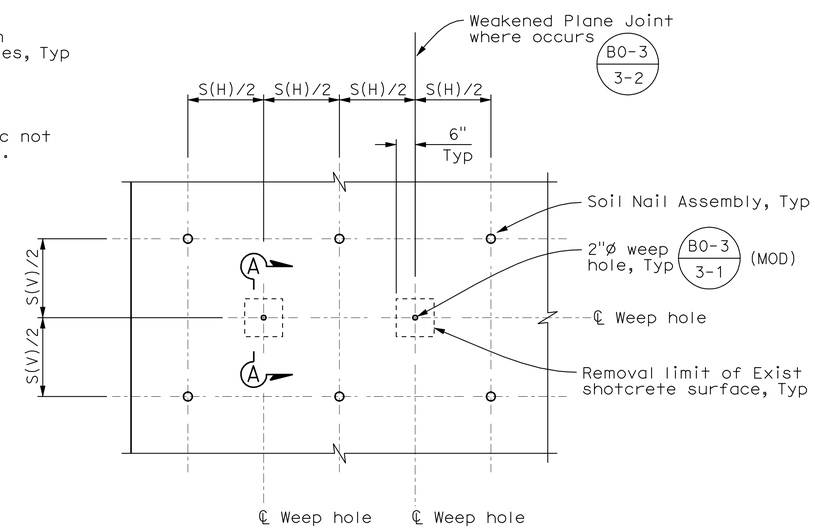

Notes:

1. S(H) denotes horizontal soil nail assembly spacing. S(V) denotes vertical soil nail spacing.
2. Weep hole and outlet pipe shall be installed between each nail column at S(H)/2.
3. Weakened planes, where they occur, shall be at S(H)/2 and S(V)/2.

PART ELEVATION - WALL DRAINAGE

½"=1'-0"

WALL DRAINAGE DETAILS

Notes:

1. See "RW No. 13 Soil Nail Wall Details" sheet for recommended Test Nail Locations. Revisions to test nail locations shall be approved by engineer.
2. Existing welded wire fabric may be trimmed and bent as needed to provide for the placement of soil nail assemblies and pervious backfill at weep holes.
3. Two layers of 4"x4", W3xW3 welded wire fabric to be placed as shown in "Production Soil Nail Assembly" detail.
4. Openings made in existing shotcrete surfacing shall be repaired by filling all voids solid with grout of shotcrete. Welded wire fabric reinforcement that was bent to create the opening shall be straightened prior to placement of grout.
5. See "RW No. 13 Soil Nail Wall Details" sheet for Soil Nail Placement.

Note:
The Contractor shall verify all controlling field dimensions before ordering or fabricating any material.

DESIGN OVERSIGHT Wei An

SIGN OFF DATE

	BY	CHECKED
DESIGN	T. Dudley	B. Fish
DETAILS	S. Desalegn	B. Fish
QUANTITIES	T. Dudley	E. Nevarez

PREPARED FOR THE STATE OF CALIFORNIA DEPARTMENT OF TRANSPORTATION

Stephen J. Mislinski
PROJECT ENGINEER

BRIDGE NO. 36-0114
POST MILE 10.95

SIDEHILL VIADUCT
SOIL NAIL DETAILS

DESIGN DETAIL SHEET (ENGLISH) (REV. 2/25/05)

ORIGINAL SCALE IN INCHES FOR REDUCED PLANS 0 1 2 3

CU 05
EA 0L7014

DISREGARD PRINTS BEARING EARLIER REVISION DATES

REVISION DATES (PRELIMINARY STAGE ONLY) 9/30/08 02/04/09 03/16/09 03/16/09 04/23/09 03/25/11 05/26/11 08/04/11

SHEET 13 OF 23

FILE => TBDSHV-k-swdet02.dgn

USERNAME => s119571 DATE PLOTTED => 01-OCT-2012 TIME PLOTTED => 08:36

DIST	COUNTY	ROUTE	POST MILES TOTAL PROJECT	SHEET No	TOTAL SHEETS
05	SCr	17	6.0/12.6	275	284

REGISTERED CIVIL ENGINEER 8/4/11 DATE

9-24-12
PLANS APPROVAL DATE

REGISTERED PROFESSIONAL ENGINEER T. Dudley No. C039514 Exp. 12/31/11 CIVIL STATE OF CALIFORNIA

The State of California or its officers or agents shall not be responsible for the accuracy or completeness of electronic copies of this plan sheet.

AECOM TECHNICAL SERVICES, INC.
2020 L STREET, SUITE 300
SACRAMENTO, CALIFORNIA 95811

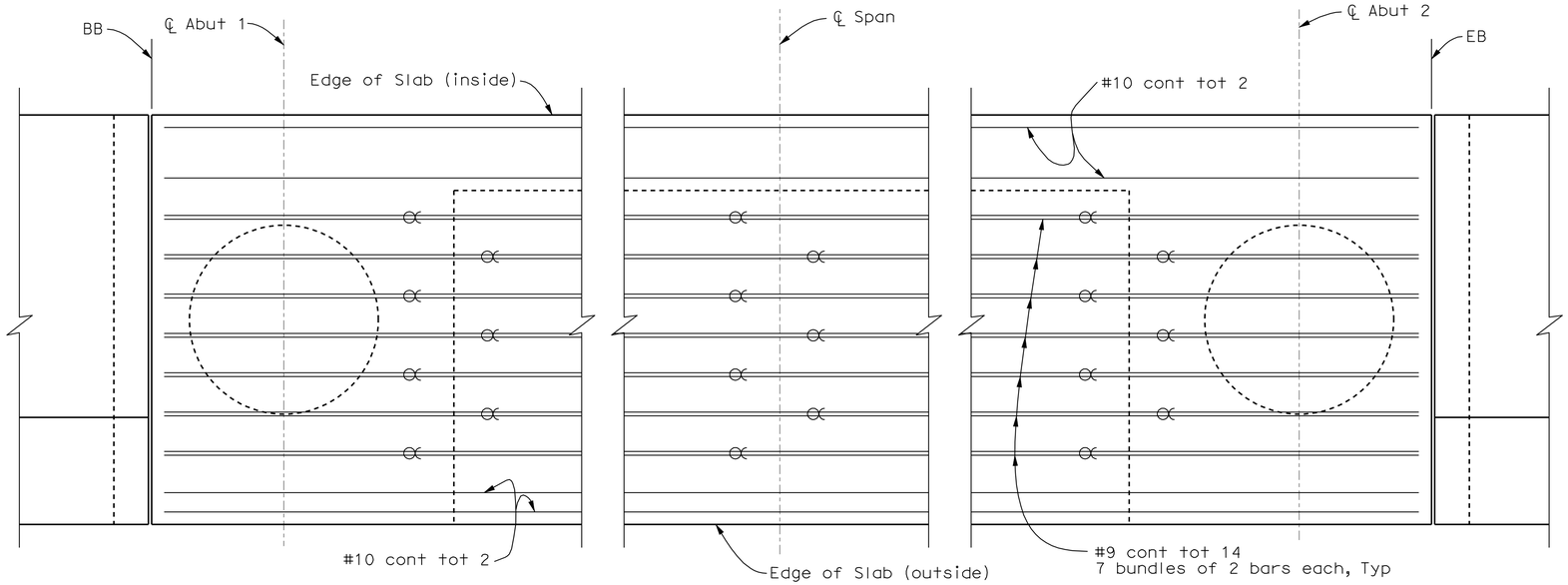

Bundled bars are indicated thus

BOTTOM SLAB REINFORCEMENT

1" = 20'

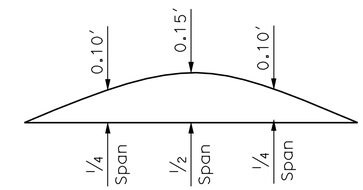

CAMBER DIAGRAM

Does not include allowance for falsework settlement

Note:

1. No lap splices allowed in top or bottom slab reinforcement.

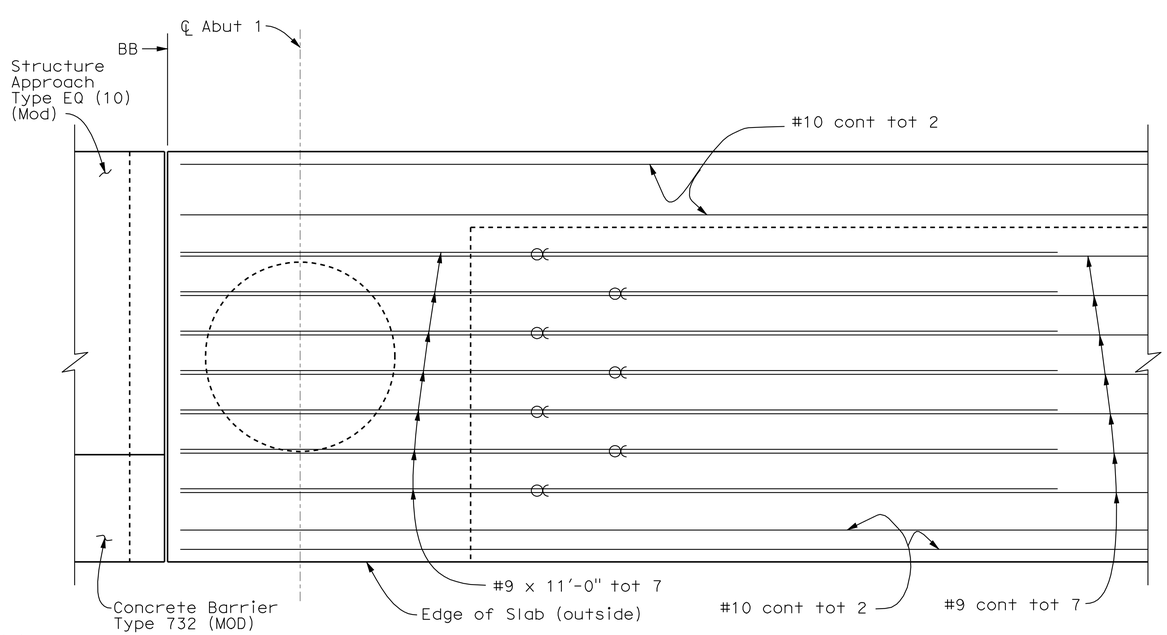

Note:
The Contractor shall verify all controlling field dimensions before ordering or fabricating any material.

TOP SLAB REINFORCEMENT- ABUTMENT 1

1" = 20'

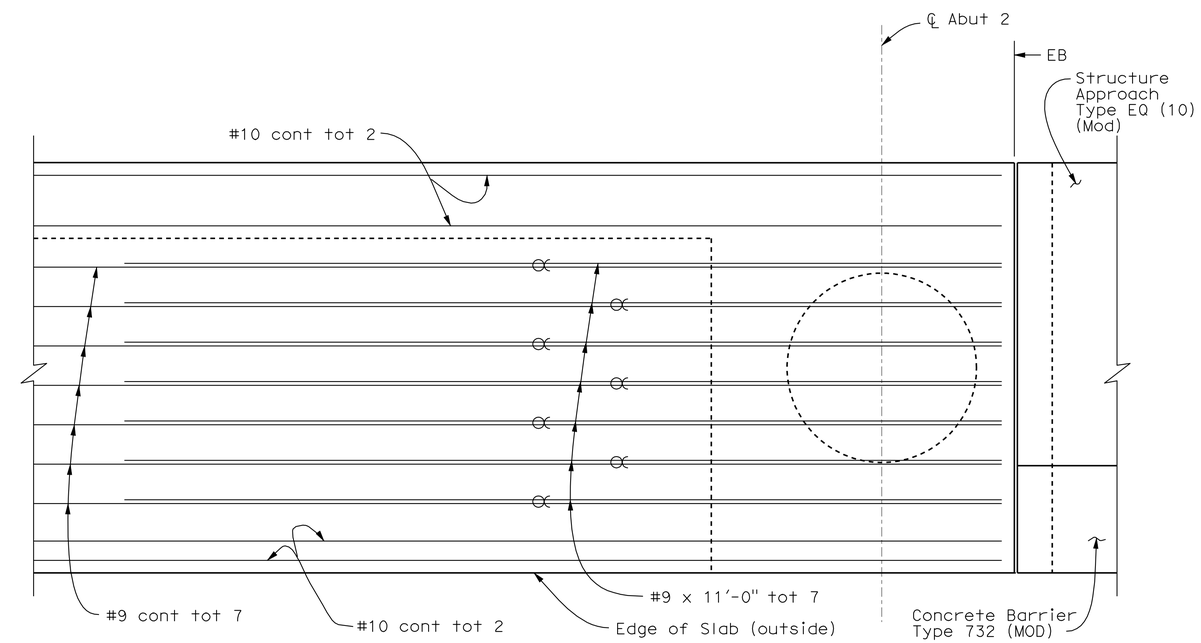

TOP SLAB REINFORCEMENT- ABUTMENT 2

1" = 20'

DESIGN OVERSIGHT Wei An	DESIGN	BY T. Dudley	CHECKED B. Fish	PREPARED FOR THE STATE OF CALIFORNIA DEPARTMENT OF TRANSPORTATION	Stephen J. Mislinski PROJECT ENGINEER
SIGN OFF DATE	DETAILS	BY S. Desalegn	CHECKED B. Fish		BRIDGE NO. 36-0114
	QUANTITIES	BY T. Dudley	CHECKED E. Nevarez		POST MILE 10.95

SIDEHILL VIADUCT
RC SLAB DETAILS

DESIGN DETAIL SHEET (ENGLISH) (REV. 2/25/05)

ORIGINAL SCALE IN INCHES FOR REDUCED PLANS 0 1 2 3

CU 05
EA 0L7014

DISREGARD PRINTS BEARING EARLIER REVISION DATES

REVISION DATES (PRELIMINARY STAGE ONLY) 9/30/08 02/04/09 03/16/09 03/16/09 04/23/09 03/25/11 05/27/11 08/04/11

SHEET 14 OF 23

FILE => TBDSHV-1-sbdet01.dgn

USERNAME => s121614 DATE PLOTTED => 01-OCT-2012 TIME PLOTTED => 08:14

DIST	COUNTY	ROUTE	POST MILES TOTAL PROJECT	SHEET No	TOTAL SHEETS
05	SCr	17	6.0/12.6	276	284

REGISTERED CIVIL ENGINEER 8/4/11 DATE

9-24-12
PLANS APPROVAL DATE

REGISTERED PROFESSIONAL ENGINEER T. Dudley No. C039514 Exp. 12/31/11 CIVIL STATE OF CALIFORNIA

The State of California or its officers or agents shall not be responsible for the accuracy or completeness of electronic copies of this plan sheet.

AECOM TECHNICAL SERVICES, INC.
2020 L STREET, SUITE 300
SACRAMENTO, CALIFORNIA 95811

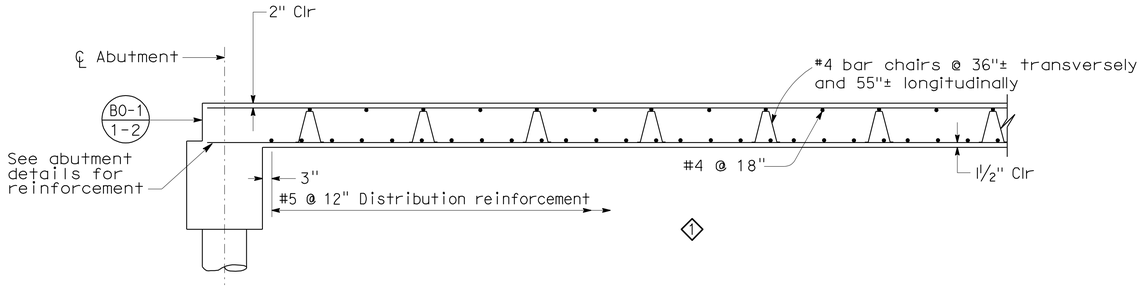

LONGITUDINAL SECTION

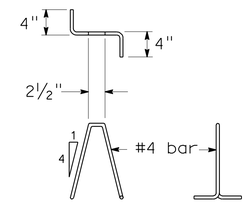

BAR CHAIR DETAIL

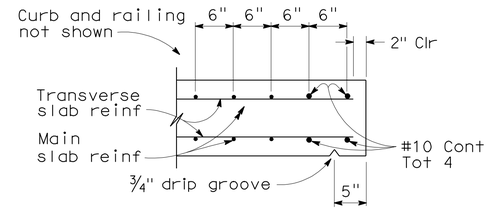

EDGE OF SLAB DETAILS

BAR SPLICE LENGTH								
Bar size	#4	#5	#6	#7	#8	#9	#10	#11
All bars, except top bars in spans over 23 ft	23"	28"	34"	39"	45"	68"	76"	85"
Top bars in spans over 23 ft	23"	28"	34"	53"	60"	77"	97"	120"

REINFORCEMENT NOTES:

Splices in top main bars to be located near center of span.
Splices in bottom main bars to be located near bent.
Spacing of all transverse bars is measured along ℄ roadway.
Skew 0° to 20°: Place all transverse bars parallel to bent.
Skew over 20°: Place transverse slab bars perpendicular to ℄ bridge. See details at right and below.

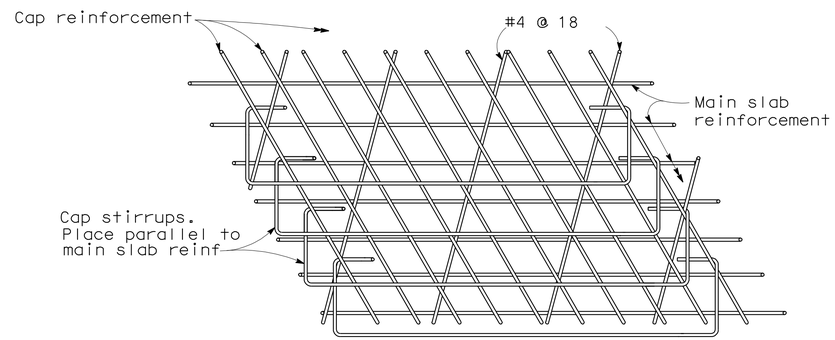

TOP SLAB REINFORCEMENT AT BENT

Note: View for main span over 23 ft.
Bar placement similar for spans under 23 ft.

1 GENERAL NOTES
LOAD AND RESISTANCE FACTOR DESIGN

DESIGN: AASHTO LRFD BRIDGE DESIGN SPECIFICATIONS, 3rd EDITION, with Interims through 2005 and the CALTRANS AMENDMENTS v3.06.01; except that geotechnical design of deep foundations, bridge details taken from Standard Plans May 2006 and earlier versions, and Standard Bridge Details XS sheets are designed using Bridge Design Specifications (1996 AASHTO with Revisions by CALTRANS).

Dead load: Includes 35 pst for future wearing surface.

Live loading: HL93 and alternative and permit design loads.

Reinforced concrete: fy = 60 ksi
f'c = 4 ksi
n = 8

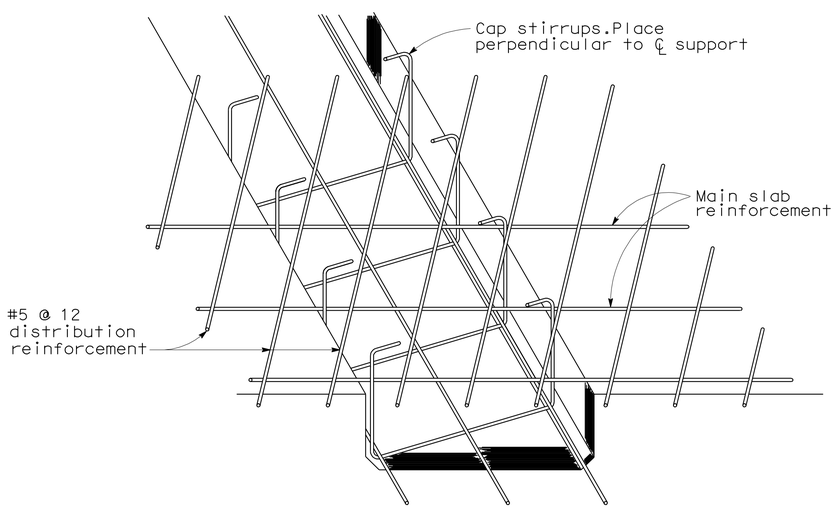

DROPPED CAP

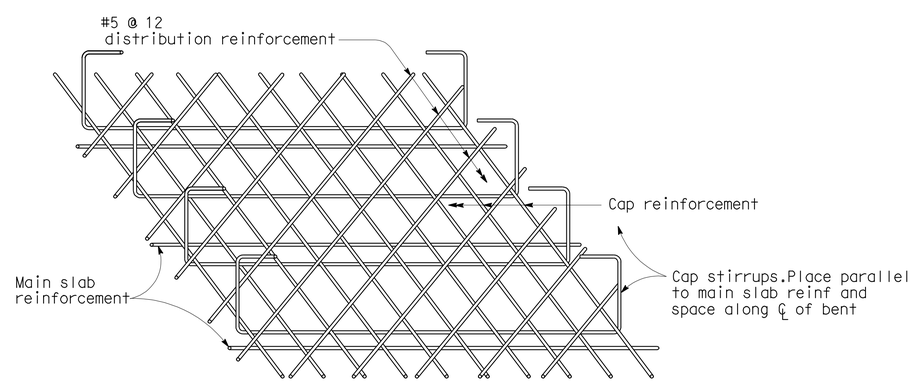

FLUSH CAP

BOTTOM SLAB REINFORCEMENT AT BENT

Note:
The Contractor shall verify all controlling field dimensions before ordering or fabricating any material.

NO SCALE

STANDARD DRAWING				
RELEASE DATE 8/26/97	DESIGN	BY L.Y. LEE	CHECKED T. FARNAN	RELEASED BY
	DETAILS	BY R. YEE	CHECKED T. FARNAN	
FILE NO. xs1-220	SUBMITTED	BY R.S. WATANABE	DRAWING DATE 8/88	OFFICE CHIEF

1 Longitudinal Section mod for current project, General Notes revised to reflect LRFD design, all details converted from metric to english units.

STATE OF CALIFORNIA
DEPARTMENT OF TRANSPORTATION

DIVISION OF ENGINEERING SERVICES

BRIDGE NO. 36-0114
MILE POST 10.95

SIDEHILL VIADUCT
SLAB REINFORCEMENT DETAILS

DS OSD 2147A (METRIC) (REV. 2/25/97)

ORIGINAL SCALE IN MILLIMETERS FOR REDUCED PLANS 0 10 20 30 40 50 60 70 80 90 100

CU 05
EA 0L7014

DISREGARD PRINTS BEARING EARLIER REVISION DATES

REVISION DATES (PRELIMINARY STAGE ONLY) 9/30/08 02/04/09 03/30/09 03/24/09 04/23/09 03/25/11 05/23/11 08/04/11

SHEET 15 OF 23

FILE => TBDSHV-m-xs1-220.dgn

USERNAME => s12614 DATE PLOTTED => 01-OCT-2012 TIME PLOTTED => 08:14

DIST	COUNTY	ROUTE	POST MILES TOTAL PROJECT	SHEET No	TOTAL SHEETS
05	SCr	17	6.0/12.6	277	284

REGISTERED CIVIL ENGINEER 8/4/11 DATE

9-24-12
PLANS APPROVAL DATE

REGISTERED PROFESSIONAL ENGINEER T. Dudley No. C039514 Exp. 12/31/11 CIVIL STATE OF CALIFORNIA

The State of California or its officers or agents shall not be responsible for the accuracy or completeness of electronic copies of this plan sheet.

AECOM TECHNICAL SERVICES, INC.
2020 L STREET, SUITE 300
SACRAMENTO, CALIFORNIA 95811

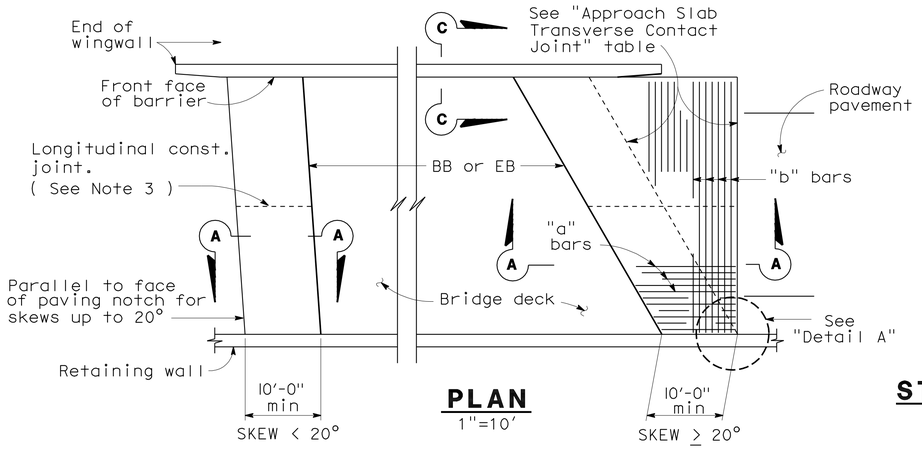

PLAN
1"=10'

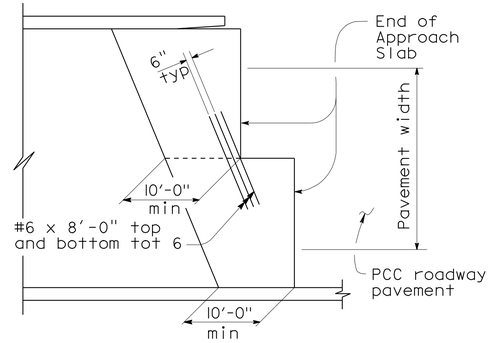

STRUCTURE APPROACH - END STAGGER DETAIL
No Scale

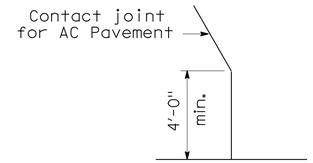

DETAIL A
No Scale

APPROACH SLAB TRANSVERSE CONTACT JOINT		
STRUCTURE SKEW	AC APPROACH PAVEMENT	PCC APPROACH PAVEMENT
< 20°	Parallel to face of paving notch	Parallel to face of paving notch
20°- 45°	Parallel to face of P N use (Detail A)	Stagger lines 24' to 36' apart
> 45°	Parallel to face of P N use (Detail A)	Stagger at each lane line

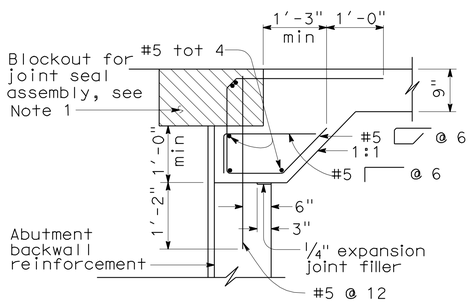

MR > 2"

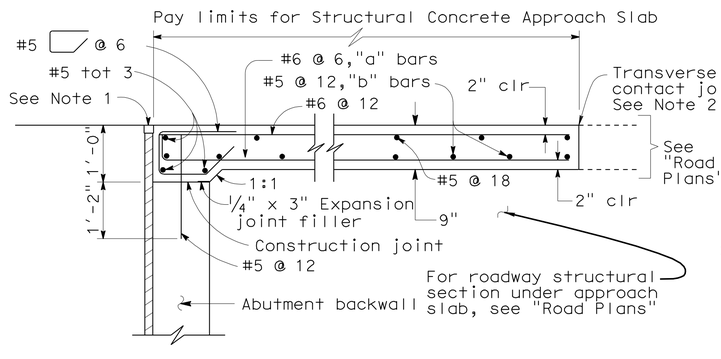

MR ≤ 2"

SEAT TYPE ABUTMENT
SECTION A-A
¾"=1'-0"

Note: Seat Type Abutment shown,for Diaphragm Type Abutment,see "Abutment Tie Details".

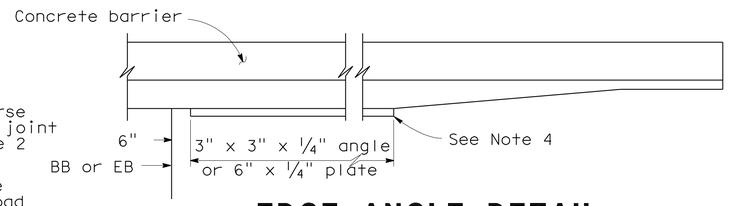

EDGE ANGLE DETAIL
½"=1'-0"

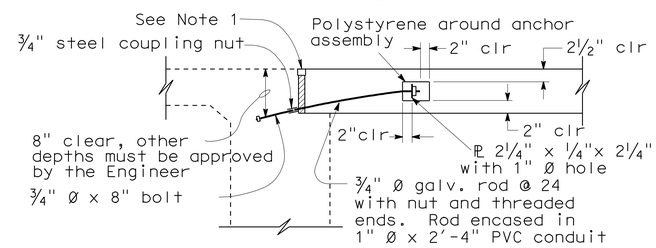

9" PAVING NOTCH

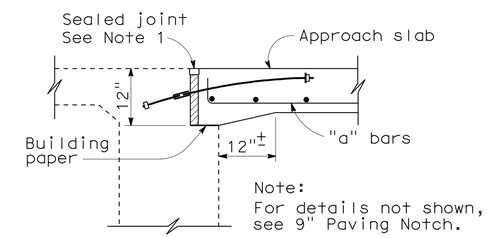

12" PAVING NOTCH

DIAPHRAGM TYPE ABUTMENT
ABUTMENT TIE DETAILS
¾"=1'-0"

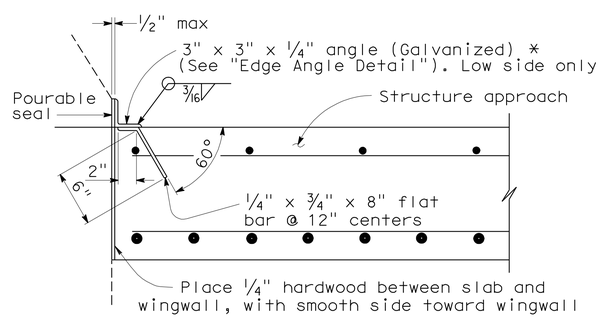

***(TO BE USED WITH TYPE 25 OR TYPE 27 CONCRETE BARRIER)**

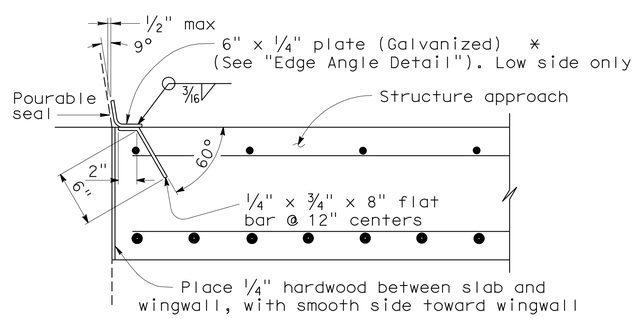

***(TO BE USED WITH TYPE 732 OR TYPE 736 CONCRETE BARRIER)**

DETAIL B
1½"=1'-0"

Note:
The Contractor shall verify all controlling field dimensions before ordering or fabricating any material.

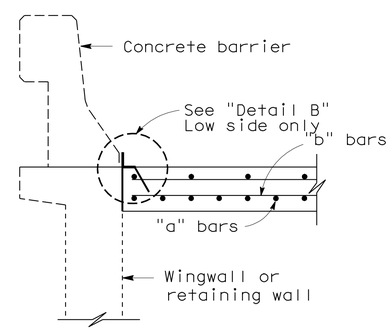

SECTION C-C
¾"=1'-0"

NOTES:

1. For details not noted or shown, see Structure Plans. Adjust bar reinforcement to clear a sawcut for sealed joint,when required.
2. For transverse contact joint with new PCC paving, refer to Standard Plan P10.
3. Longitudinal construction joints,when permitted by the Engineer,shall be located on lane lines.
4. End angle or plate at beginning of barrier transition, end of wing wall or end of structure approach as applicable.
5. At the contractor's option,approach slab transverse reinforcement may be placed parallel to paving notch. Spacing of transverse reinforcement is measured along ℄ roadway.
6. For drainage details,see Structure Plans.

STANDARD DRAWING

RELEASE DATE 3/14/05	DESIGN	BY M.TRAFFALIS	CHECKED E.THORKILDSEN	RELEASED BY
	DETAILS	BY R.YEE	CHECKED E.THORKILDSEN	
FILE NO. xs3-150e	SUBMITTED	BY M.HA	DRAWING DATE 8/92	OFFICE CHIEF

DS OSD 2147A (METRIC) (REV. 2/25/97)

ORIGINAL SCALE IN MILLIMETERS FOR REDUCED PLANS 0 10 20 30 40 50 60 70 80 90 100

STATE OF CALIFORNIA
DEPARTMENT OF TRANSPORTATION

DIVISION OF ENGINEERING SERVICES

CU 05
EA 0L7014

BRIDGE NO. 36-0114
MILE POST 10.95

SIDEHILL VIADUCT
STRUCTURE APPROACH TYPE EQ(10)

DISREGARD PRINTS BEARING EARLIER REVISION DATES

REVISION DATES (PRELIMINARY STAGE ONLY) 9/26/08 02/06/09 03/16/09 03/16/09 04/23/09 03/25/11 06/27/11 08/04/11

SHEET 16 OF 23

FILE => TBDSHV-n-xs3-150e.dgn

USERNAME => s121614 DATE PLOTTED => 01-OCT-2012 TIME PLOTTED => 08:14

DIST	COUNTY	ROUTE	POST MILES TOTAL PROJECT	SHEET No	TOTAL SHEETS
05	SCr	17	6.0/12.6	278	284

REGISTERED CIVIL ENGINEER 8/4/11 DATE

9-24-12
PLANS APPROVAL DATE

REGISTERED PROFESSIONAL ENGINEER T. Dudley No. C039514 Exp. 12/31/11 CIVIL STATE OF CALIFORNIA

The State of California or its officers or agents shall not be responsible for the accuracy or completeness of electronic copies of this plan sheet.

AECOM TECHNICAL SERVICES, INC.
2020 L STREET, SUITE 300
SACRAMENTO, CALIFORNIA 95811

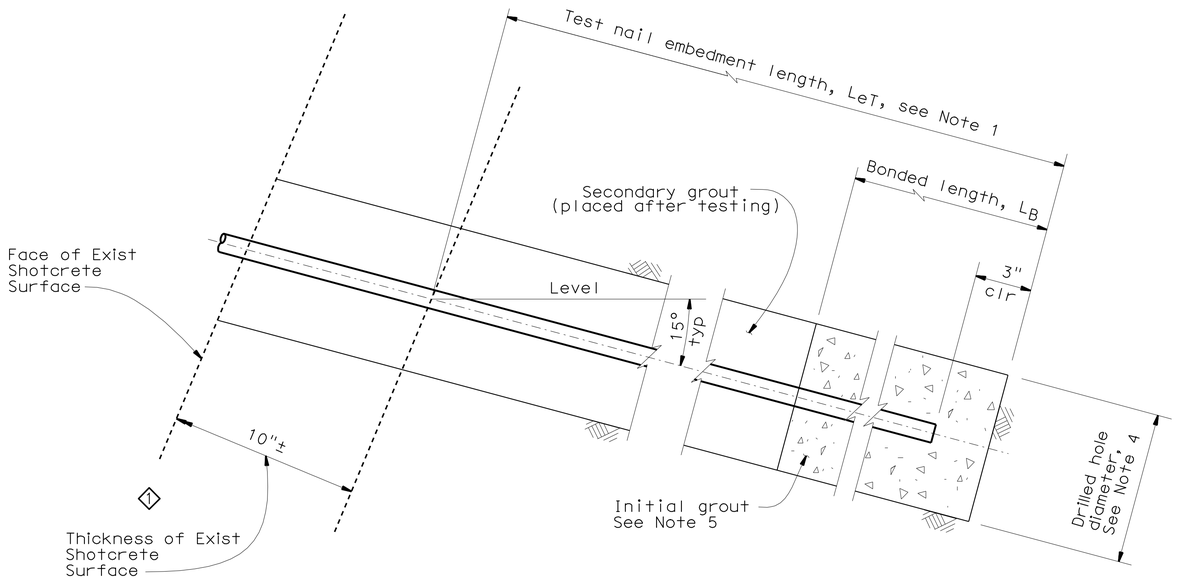

TEST NAIL DETAIL

SCALE 3"=1'-0

Notes:

1. 1 The test nail embedment length LeT, shall be equal to 2/3 of the embedment length, Le, of adjacent production soil nail assemblies, but not less than 27'-0".
2. 1 The total length of the test nail assembly equals the embedment length plus the thickness of the existing shotcrete surface, plus the length required for jacking equipment.
3. For location of proof test nail see "STRUCTURE PLAN" sheets. Additional proof test nails will be installed and tested per special provisions.
4. Contractor to determine drilled hole diameter.
5. Finished grout surface to be normal to the bar.

STANDARD DRAWING

FILE NO. xs12-020e

APPROVED BY K. GRISWELL
RESPONSIBLE TECHNICAL SPECIALIST
APPROVAL DATE 6-12-08

RELEASED BY ROBERTO LACALLE
RESPONSIBLE OFFICE CHIEF
RELEASE DATE 6-12-08

1 Revise detail and note to reflect existing conditions

STATE OF CALIFORNIA
DEPARTMENT OF TRANSPORTATION

DIVISION OF ENGINEERING SERVICES

BRIDGE NO. 36-0114
POST MILE 10.95

SIDEHILL VIADUCT
TEST NAIL DETAILS

DS OSD 2147A (ENGLISH STANDARD DRAWING "XS" BORDER REV. 01/11/08)

ORIGINAL SCALE IN INCHES FOR REDUCED PLANS 0 1 2 3

CU 05
EA 0L7014

DISREGARD PRINTS BEARING EARLIER REVISION DATES

REVISION DATES (PRELIMINARY STAGE ONLY) 03/18/09 03/18/09 04/23/09 03/25/11 05/23/11 08/04/11

SHEET 17 OF 23

FILE => TBDSHV-o-xs12-020e.dgn

USERNAME => s126614 DATE PLOTTED => 02-OCT-2012 TIME PLOTTED => 06:11

DIST	COUNTY	ROUTE	POST MILES TOTAL PROJECT	SHEET No	TOTAL SHEETS
05	SCr	17	6.0/12.6	279	284

REGISTERED CIVIL ENGINEER 8/4/11

9-24-12
PLANS APPROVAL DATE

The State of California or its officers or agents shall not be responsible for the accuracy or completeness of electronic copies of this plan sheet.

REGISTERED PROFESSIONAL ENGINEER Dan Appelbaum No. C50001 Exp. 6-30-13 CIVIL STATE OF CALIFORNIA

This LOTB sheet was prepared in accordance with the Caltrans Soil & Rock Logging, Classification, & Presentation Manual (June 2007).

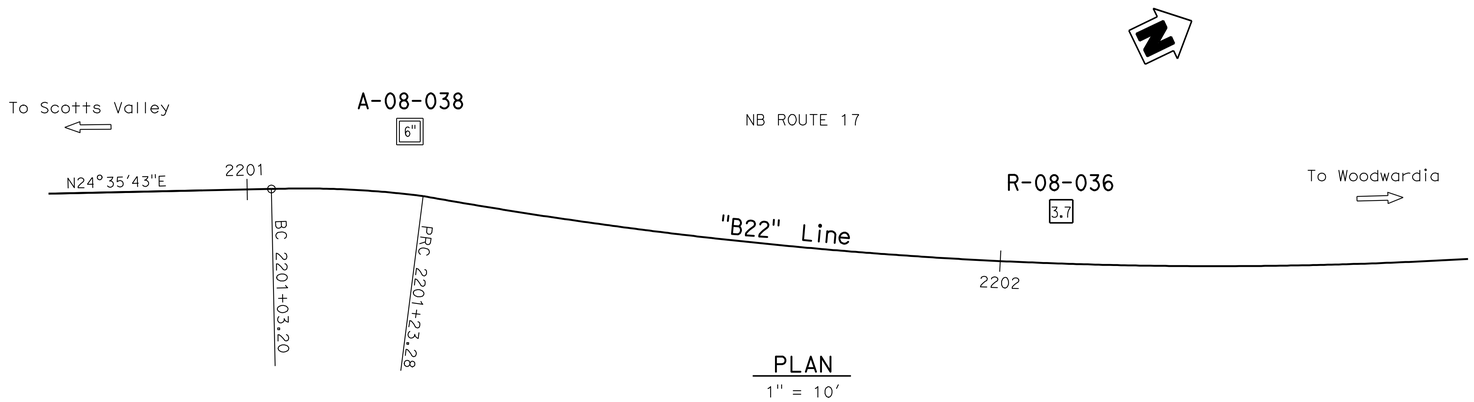

BENCH MARK

PRHV PM10.89
N= 1870264.375
E= 6132105.500
Elev 1547.448' (NAVD88)

PLAN

1" = 10'

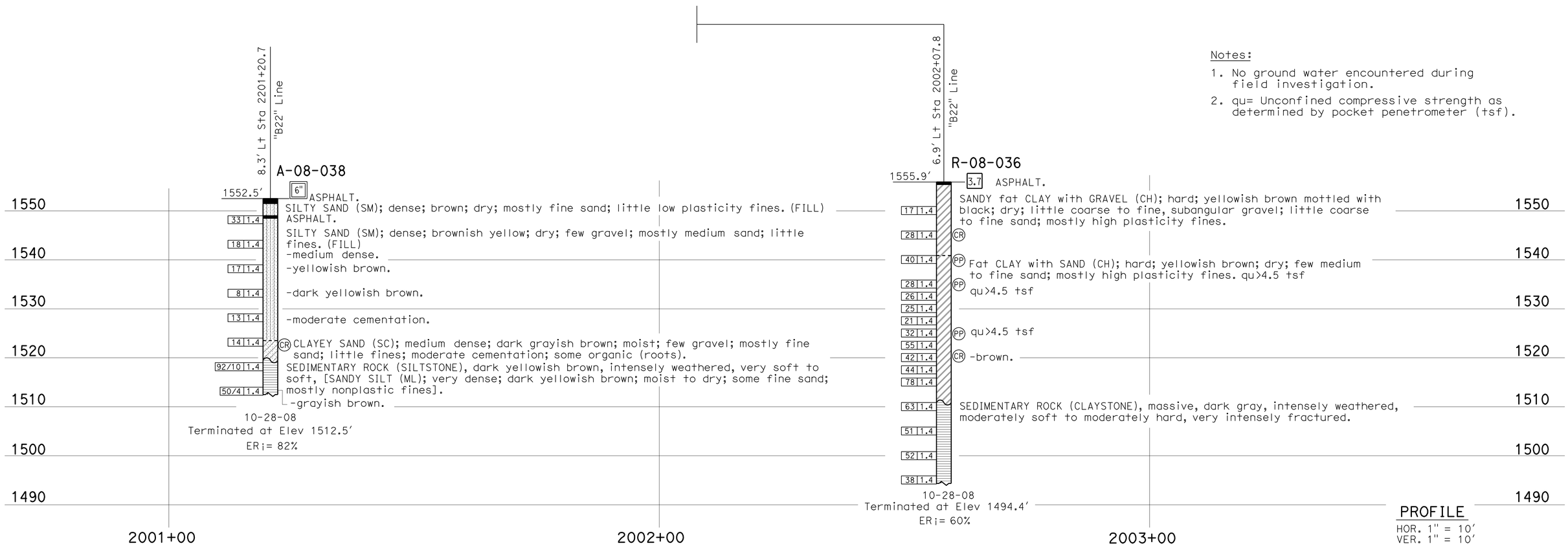

Notes:

1. No ground water encountered during field investigation.
2. qu= Unconfined compressive strength as determined by pocket penetrometer (tsf).

PROFILE

HOR. 1" = 10'
VER. 1" = 10'

ENGINEERING SERVICES		GEOTECHNICAL SERVICES	STATE OF CALIFORNIA DEPARTMENT OF TRANSPORTATION	DIVISION OF ENGINEERING SERVICES STRUCTURE DESIGN DESIGN BRANCH	BRIDGE NO. 36-0114 POST MILES 10.95	SIDEHILL VIADUCT LOG OF TEST BORINGS 1 OF 6
FUNCTIONAL SUPERVISOR NAME: M. Finegan	DRAWN BY: I. G-Remmen, 1/09 CHECKED BY: J. Kimura	FIELD INVESTIGATION BY: Z. Dellamas, R. Turner				

OGS CIVIL LOG OF TEST BORINGS SHEET

ORIGINAL SCALE IN INCHES FOR REDUCED PLANS 0 1 2 3

CU 05
EA 0L7014

DISREGARD PRINTS BEARING EARLIER REVISION DATES

REVISION DATES: 02-26-09 03-06-09 03/16/09 04/16/09 03/29/11 08/04/11

SHEET 18 OF 23

FILE => TBDSHV-s-ltb01.dgn

USERNAME => s126614 DATE PLOTTED => 01-OCT-2012 TIME PLOTTED => 08:14

DIST	COUNTY	ROUTE	POST MILES TOTAL PROJECT	SHEET No	TOTAL SHEETS
05	SCr	17	6.0/12.6	280	284

REGISTERED CIVIL ENGINEER 8/4/11

9-24-12
PLANS APPROVAL DATE

REGISTERED PROFESSIONAL ENGINEER Dan Appelbaum No. C50001 Exp. 6-30-13 CIVIL STATE OF CALIFORNIA

The State of California or its officers or agents shall not be responsible for the accuracy or completeness of electronic copies of this plan sheet.

This LOTB sheet was prepared in accordance with the Caltrans Soil & Rock Logging, Classification, & Presentation Manual (June 2007).

BENCH MARK

PRHV PM10.89
N= 1870264.375
E= 6132105.500
Elev 1547.448′

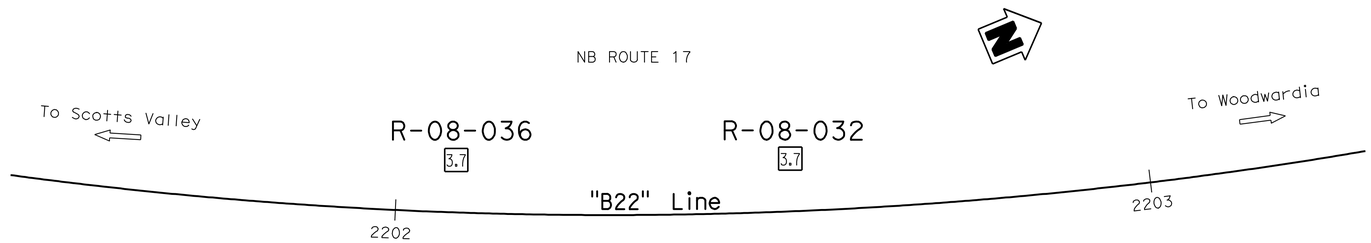

PLAN
1" = 10′

Note: qu= Unconfined compressive strength as determined by pocket penetrometer (tsf).

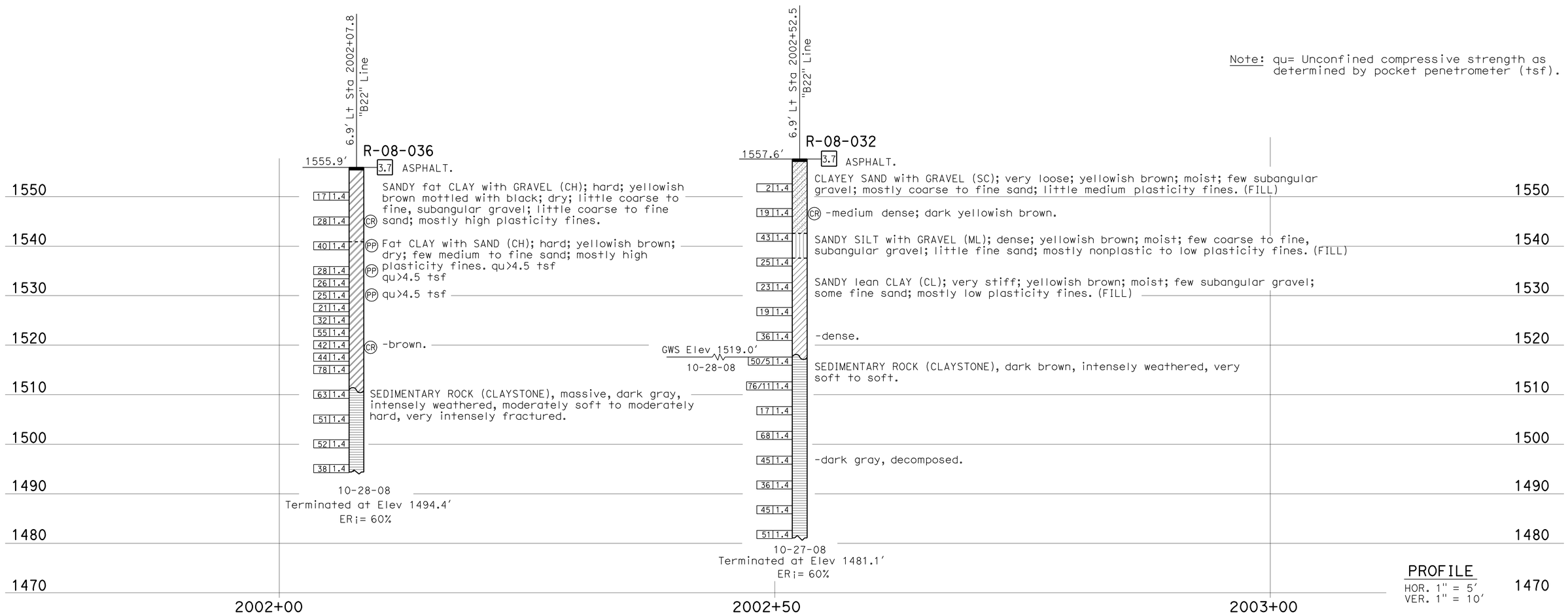

PROFILE
HOR. 1" = 5′
VER. 1" = 10′

ENGINEERING SERVICES	GEOTECHNICAL SERVICES	STATE OF CALIFORNIA DEPARTMENT OF TRANSPORTATION	DIVISION OF ENGINEERING SERVICES STRUCTURE DESIGN DESIGN BRANCH	BRIDGE NO. 36-0114 POST MILES 10.95	SIDEHILL VIADUCT
FUNCTIONAL SUPERVISOR NAME: M. Finegan	DRAWN BY: I. G-Remmen, 1/09 CHECKED BY: J. Kimura	FIELD INVESTIGATION BY: Z. Dellamas, R. Turner			LOG OF TEST BORINGS 2 OF 6

OGS CIVIL LOG OF TEST BORINGS SHEET

ORIGINAL SCALE IN INCHES FOR REDUCED PLANS 0 1 2 3

CU 05
EA 0L7014

DISREGARD PRINTS BEARING EARLIER REVISION DATES

REVISION DATES: 02-26-09 03-06-09 03/16/09 04/27/09 03/29/11 08/04/11

SHEET 19 OF 23

FILE => TBDSHV-s-ltb02.dgn

USERNAME => s121614 DATE PLOTTED => 01-OCT-2012 TIME PLOTTED => 08:15

DIST	COUNTY	ROUTE	POST MILES TOTAL PROJECT	SHEET No	TOTAL SHEETS
05	SCr	17	6.0/12.6	281	284

REGISTERED CIVIL ENGINEER 8/4/11

9-24-12
PLANS APPROVAL DATE

REGISTERED PROFESSIONAL ENGINEER
Dan Appelbaum
No. C50001
Exp. 6-30-13
CIVIL
STATE OF CALIFORNIA

The State of California or its officers or agents shall not be responsible for the accuracy or completeness of electronic copies of this plan sheet.

This LOTB sheet was prepared in accordance with the Caltrans Soil & Rock Logging, Classification, & Presentation Manual (June 2007).

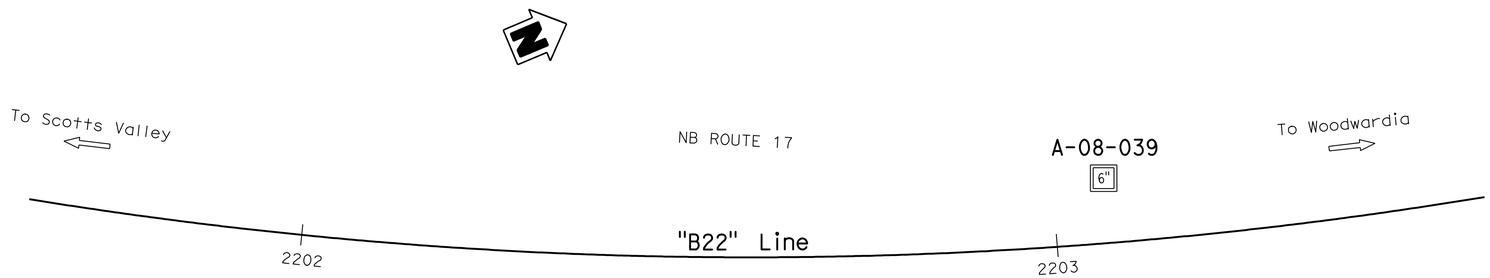

BENCH MARK

PRHV PM10.89
N= 1870264.375
E= 6132105.500
Elev 1547.448′ (NAVD88)

PLAN

1" = 10′

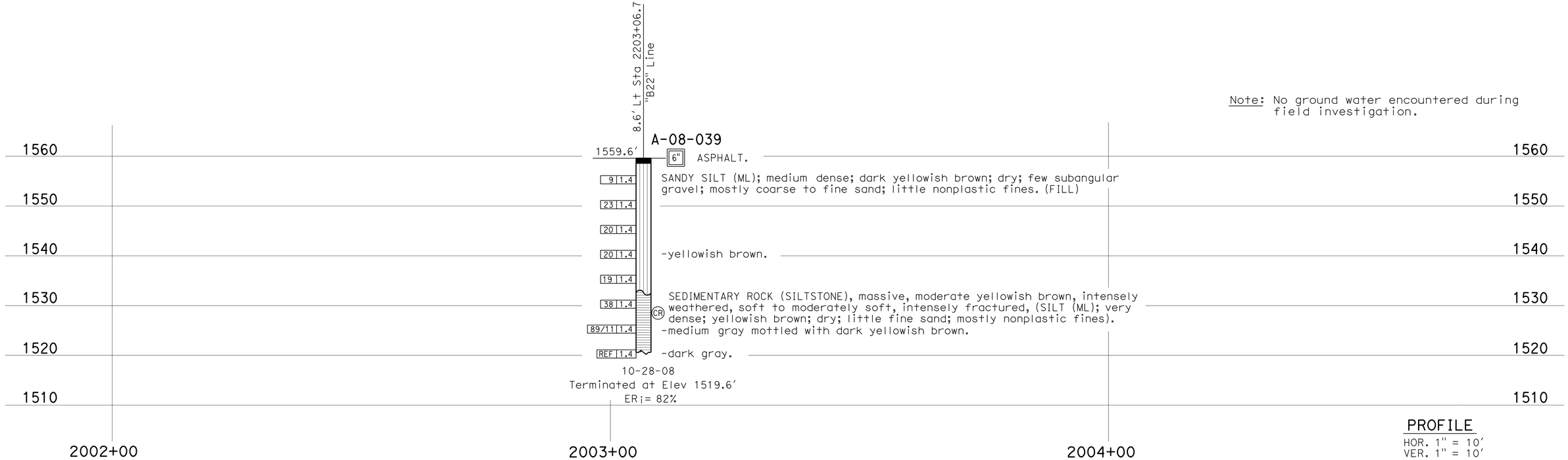

Note: No ground water encountered during field investigation.

PROFILE

HOR. 1" = 10′
VER. 1" = 10′

ENGINEERING SERVICES		GEOTECHNICAL SERVICES
FUNCTIONAL SUPERVISOR	DRAWN BY: I. G-Remmen, 1/09	FIELD INVESTIGATION BY:
NAME: M. Finegan	CHECKED BY: J. Kimura	Z. Dellamas

OGS CIVIL LOG OF TEST BORINGS SHEET

ORIGINAL SCALE IN INCHES FOR REDUCED PLANS 0 1 2 3

STATE OF CALIFORNIA DEPARTMENT OF TRANSPORTATION

DIVISION OF ENGINEERING SERVICES STRUCTURE DESIGN
DESIGN BRANCH

CU 05
EA 0L7014

BRIDGE NO. 36-0114
POST MILES 10.95

SIDEHILL VIADUCT
LOG OF TEST BORINGS 3 OF 6

DISREGARD PRINTS BEARING EARLIER REVISION DATES

REVISION DATES: 02-26-09 03-06-09 03/26/09 04/27/09 03/22/11 08/04/11

SHEET 20 OF 23

FILE => TBDSHV-s-ltb03.dgn

USERNAME => s12614 DATE PLOTTED => 01-OCT-2012 TIME PLOTTED => 08:15

DIST	COUNTY	ROUTE	POST MILES TOTAL PROJECT	SHEET No	TOTAL SHEETS
05	SCr	17	6.0/12.6	282	284

REGISTERED CIVIL ENGINEER 8/4/11

9-24-12
PLANS APPROVAL DATE

REGISTERED PROFESSIONAL ENGINEER Dan Appelbaum No. C50001 Exp. 6-30-13 CIVIL STATE OF CALIFORNIA

The State of California or its officers or agents shall not be responsible for the accuracy or completeness of electronic copies of this plan sheet.

REFERENCE: CALTRANS SOIL & ROCK LOGGING, CLASSIFICATION, AND PRESENTATION MANUAL (JUNE 2007)

CEMENTATION

Description	Criteria
Weak	Crumbles or breaks with handling or little finger pressure.
Moderate	Crumbles or breaks with considerable finger pressure.
Strong	Will not crumble or break with finger pressure.

CONSISTENCY OF COHESIVE SOILS

Description	Unconfined Compressive Strength (tsf)	Pocket Penetrometer Measurement (tsf)	Torvane Measurement (tsf)	Field Approximation
Very Soft	< 0.25	< 0.25	< 0.12	Easily penetrated several inches by fist
Soft	0.25 to 0.50	0.25 to 0.50	0.12 to 0.25	Easily penetrated several inches by thumb
Medium Stiff	0.50 to 1.0	0.50 to 1.0	0.25 to 0.50	Penetrated several inches by thumb with moderate effort
Stiff	1 to 2	1 to 2	0.50 to 1.0	Readily indented by thumb but penetrated only with great effort
Very Stiff	2 to 4	2 to 4	1.0 to 2.0	Readily indented by thumbnail
Hard	> 4.0	> 4.0	> 2.0	Indented by thumbnail with difficulty

BOREHOLE IDENTIFICATION

Symbol	Hole Type	Description
Size	A	Auger Boring
Size	R P	Rotary drilled boring Rotary percussion boring (air)
Size	R	Rotary drilled diamond core
Size	HD HA	Hand driven (1-inch soil tube) Hand Auger
●	D	Dynamic Cone Penetration Boring
▲	CPT	Cone Penetration Test (ASTM D 5778-95)
⬚	O	Other

Note: Size in inches.

PLASTICITY OF FINE-GRAINED SOILS

Description	Criteria
Nonplastic	A 1/8-inch thread cannot be rolled at any water content.
Low	The thread can barely be rolled and the lump cannot be formed when drier than the plastic limit.
Medium	The thread is easy to roll and not much time is required to reach the plastic limit. The thread cannot be rerolled after reaching the plastic limit. The lump crumbles when drier than the plastic limit.
High	It takes considerable time rolling and kneading to reach the plastic limit. The thread can be rerolled several times after reaching the plastic limit. The lump can be formed without crumbling when drier than the plastic limit.

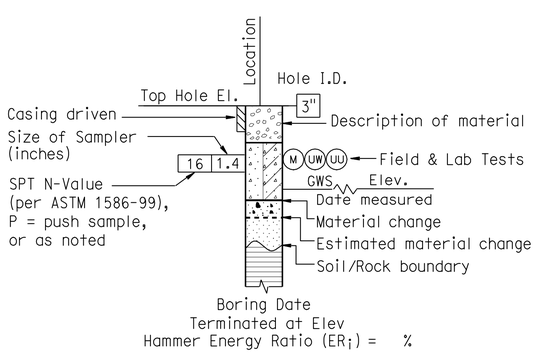

ROTARY BORING

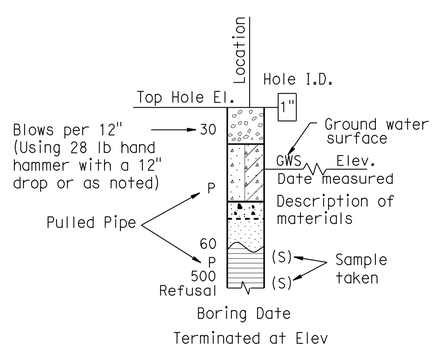

HAND BORING

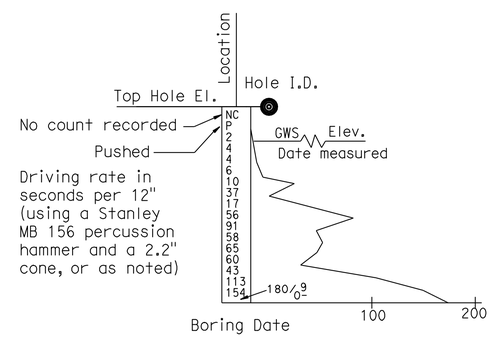

DYNAMIC CONE PENETRATION BORING

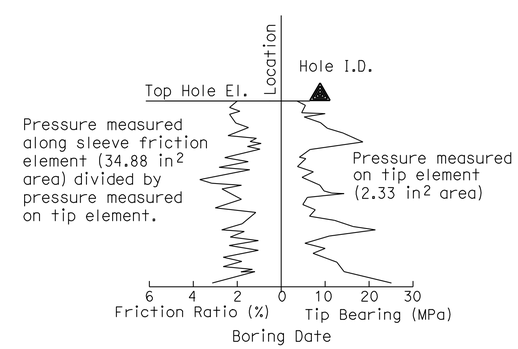

CONE PENETRATION TEST (CPT) SOUNDING

ENGINEERING SERVICES	GEOTECHNICAL SERVICES	STATE OF CALIFORNIA DEPARTMENT OF TRANSPORTATION	DIVISION OF ENGINEERING SERVICES STRUCTURE DESIGN DESIGN BRANCH	BRIDGE NO. 36-0114 POST MILE 10.95	SIDEHILL VIADUCT LOG OF TEST BORINGS 4 OF 6
	PREPARED BY: I.G-Remmen, 2/09				

GS LOTB SOIL LEGEND

ORIGINAL SCALE IN INCHES FOR REDUCED PLANS 0 1 2 3

CU 05
EA 0L7014

DISREGARD PRINTS BEARING EARLIER REVISION DATES

REVISION DATES: 02-26-09 03-06-09 03/16/09 04/22/09 03/23/11 08/04/11

SHEET 21 OF 23

FILE => TBDSHV-s-ltb04.dgn

USERNAME => s121614 DATE PLOTTED => 01-OCT-2012 TIME PLOTTED => 08:15

REFERENCE: CALTRANS SOIL & ROCK LOGGING, CLASSIFICATION, AND PRESENTATION MANUAL (JUNE 2007)

DIST	COUNTY	ROUTE	POST MILES TOTAL PROJECT	SHEET No	TOTAL SHEETS
05	SCr	17	6.0/12.6	283	284

Dan Appelbaum 8/4/11
REGISTERED CIVIL ENGINEER

9-24-12
PLANS APPROVAL DATE

The State of California or its officers or agents shall not be responsible for the accuracy or completeness of electronic copies of this plan sheet.

REGISTERED PROFESSIONAL ENGINEER
Dan Appelbaum
No. C50001
Exp. 6-30-13
CIVIL
STATE OF CALIFORNIA

GROUP SYMBOLS AND NAMES

Graphic/Symbol	Group Names	Graphic/Symbol	Group Names
GW	Well-graded GRAVEL Well-graded GRAVEL with SAND	CL	Lean CLAY Lean CLAY with SAND Lean CLAY with GRAVEL SANDY lean CLAY SANDY lean CLAY with GRAVEL GRAVELLY lean CLAY GRAVELLY lean CLAY with SAND
GP	Poorly graded GRAVEL Poorly graded GRAVEL with SAND		
GW-GM	Well-graded GRAVEL with SILT Well-graded GRAVEL with SILT and SAND	CL-ML	SILTY CLAY SILTY CLAY with SAND SILTY CLAY with GRAVEL SANDY SILTY CLAY SANDY SILTY CLAY with GRAVEL GRAVELLY SILTY CLAY GRAVELLY SILTY CLAY with SAND
GW-GC	Well-graded GRAVEL with CLAY (or SILTY CLAY) Well-graded GRAVEL with CLAY and SAND (or SILTY CLAY and SAND)		
GP-GM	Poorly graded GRAVEL with SILT Poorly graded GRAVEL with SILT and SAND	ML	SILT SILT with SAND SILT with GRAVEL SANDY SILT SANDY SILT with GRAVEL GRAVELLY SILT GRAVELLY SILT with SAND
GP-GC	Poorly graded GRAVEL with CLAY (or SILTY CLAY) Poorly graded GRAVEL with CLAY and SAND (or SILTY CLAY and SAND)		
GM	SILTY GRAVEL SILTY GRAVEL with SAND	OL	ORGANIC lean CLAY ORGANIC lean CLAY with SAND ORGANIC lean CLAY with GRAVEL SANDY ORGANIC lean CLAY SANDY ORGANIC lean CLAY with GRAVEL GRAVELLY ORGANIC lean CLAY GRAVELLY ORGANIC lean CLAY with SAND
GC	CLAYEY GRAVEL CLAYEY GRAVEL with SAND		
GC-GM	SILTY, CLAYEY GRAVEL SILTY, CLAYEY GRAVEL with SAND	OL	ORGANIC SILT ORGANIC SILT with SAND ORGANIC SILT with GRAVEL SANDY ORGANIC SILT SANDY ORGANIC SILT with GRAVEL GRAVELLY ORGANIC SILT GRAVELLY ORGANIC SILT with SAND
SW	Well-graded SAND Well-graded SAND with GRAVEL		
SP	Poorly graded SAND Poorly graded SAND with GRAVEL	CH	Fat CLAY Fat CLAY with SAND Fat CLAY with GRAVEL SANDY fat CLAY SANDY fat CLAY with GRAVEL GRAVELLY fat CLAY GRAVELLY fat CLAY with SAND
SW-SM	Well-graded SAND with SILT Well-graded SAND with SILT and GRAVEL		
SW-SC	Well-graded SAND with CLAY (or SILTY CLAY) Well-graded SAND with CLAY and GRAVEL (or SILTY CLAY and GRAVEL)	MH	Elastic SILT Elastic SILT with SAND Elastic SILT with GRAVEL SANDY elastic SILT SANDY elastic SILT with GRAVEL GRAVELLY elastic SILT GRAVELLY elastic SILT with SAND
SP-SM	Poorly graded SAND with SILT Poorly graded SAND with SILT and GRAVEL		
SP-SC	Poorly graded SAND with CLAY (or SILTY CLAY) Poorly graded SAND with CLAY and GRAVEL (or SILTY CLAY and GRAVEL)	OH	ORGANIC fat CLAY ORGANIC fat CLAY with SAND ORGANIC fat CLAY with GRAVEL SANDY ORGANIC fat CLAY SANDY ORGANIC fat CLAY with GRAVEL GRAVELLY ORGANIC fat CLAY GRAVELLY ORGANIC fat CLAY with SAND
SM	SILTY SAND SILTY SAND with GRAVEL		
SC	CLAYEY SAND CLAYEY SAND with GRAVEL	OH	ORGANIC elastic SILT ORGANIC elastic SILT with SAND ORGANIC elastic SILT with GRAVEL SANDY ORGANIC elastic SILT SANDY ORGANIC elastic SILT with GRAVEL GRAVELLY ORGANIC elastic SILT GRAVELLY ORGANIC elastic SILT with SAND
SC-SM	SILTY, CLAYEY SAND SILTY, CLAYEY SAND with GRAVEL		
PT	PEAT	OL/OH	ORGANIC SOIL ORGANIC SOIL with SAND ORGANIC SOIL with GRAVEL SANDY ORGANIC SOIL SANDY ORGANIC SOIL with GRAVEL GRAVELLY ORGANIC SOIL GRAVELLY ORGANIC SOIL with SAND
	COBBLES COBBLES and BOULDERS BOULDERS		

FIELD AND LABORATORY TESTING

- (C) Consolidation (ASTM D 2435)
- (CL) Collapse Potential (ASTM D 5333)
- (CP) Compaction Curve (CTM 216)
- (CR) Corrosivity Testing (CTM 643, CTM 422, CTM 417)
- (CU) Consolidated Undrained Triaxial (ASTM D 4767)
- (DS) Direct Shear (ASTM D 3080)
- (EI) Expansion Index (ASTM D 4829)
- (M) Moisture Content (ASTM D 2216)
- (OC) Organic Content-% (ASTM D 2974)
- (P) Permeability (CTM 220)
- (PA) Particle Size Analysis (ASTM D 422)
- (PI) Plasticity Index (AASHTO T 90) Liquid Limit (AASHTO T 89)
- (PL) Point Load Index (ASTM D 5731)
- (PM) Pressure Meter
- (PP) Pocket Penetrometer
- (R) R-Value (CTM 301)
- (SE) Sand Equivalent (CTM 217)
- (SG) Specific Gravity (AASHTO T 100)
- (SL) Shrinkage Limit (ASTM D 427)
- (SW) Swell Potential (ASTM D 4546)
- (TV) Pocket Torvane
- (UC) Unconfined Compression-Soil (ASTM D 2166) Unconfined Compression-Rock (ASTM D 2938)
- (UU) Unconsolidated Undrained Triaxial (ASTM D 2850)
- (UW) Unit Weight (ASTM D 4767)
- (VS) Vane Shear (AASHTO T 223)

APPARENT DENSITY OF COHESIONLESS SOILS

Description	SPT N_{60} (Blows / 12 inches)
Very loose	0 - 4
Loose	5 - 10
Medium Dense	11 - 30
Dense	31 - 50
Very Dense	> 50

MOISTURE

Description	Criteria
Dry	Absence of moisture, dusty, dry to the touch
Moist	Damp but no visible water
Wet	Visible free water, usually soil is below water table

PERCENT OR PROPORTION OF SOILS

Description	Criteria
Trace	Particles are present but estimated to be less than 5%
Few	5 to 10%
Little	15 to 25%
Some	30 to 45%
Mostly	50 to 100%

PARTICLE SIZE

Description		Size
Boulder		> 12"
Cobble		3" to 12"
Gravel	Coarse	3/4" to 3"
	Fine	No. 4 to 3/4"
Sand	Coarse	No. 10 to No. 4
	Medium	No. 40 to No. 10
	Fine	No. 200 to No. 40

ENGINEERING SERVICES

GEOTECHNICAL SERVICES
PREPARED BY: I.G-Remmen, 2/09

STATE OF CALIFORNIA
DEPARTMENT OF TRANSPORTATION

DIVISION OF ENGINEERING SERVICES
STRUCTURE DESIGN
DESIGN BRANCH

BRIDGE NO. 36-0114
POST MILE 10.95

SIDEHILL VIADUCT
LOG OF TEST BORINGS 5 OF 6

GS LOTB SOIL LEGEND

ORIGINAL SCALE IN INCHES FOR REDUCED PLANS 0 1 2 3

CU 05
EA 0L7014

DISREGARD PRINTS BEARING EARLIER REVISION DATES

REVISION DATES: 02-26-09 03-06-09 03/16/09 04/22/09 03/23/11 08/04/11

SHEET 22 OF 23

FILE => TBDSHV-s-ltb05.dgn

USERNAME => s121614 DATE PLOTTED => 01-OCT-2012 TIME PLOTTED => 08:15

DIST	COUNTY	ROUTE	POST MILES TOTAL PROJECT	SHEET No	TOTAL SHEETS
05	SCr	17	6.0/12.6	284	284

REGISTERED CIVIL ENGINEER 8/4/11

9-24-12
PLANS APPROVAL DATE

The State of California or its officers or agents shall not be responsible for the accuracy or completeness of electronic copies of this plan sheet.

REGISTERED PROFESSIONAL ENGINEER Dan Appelbaum No. C50001 Exp. 6-30-13 CIVIL STATE OF CALIFORNIA

REFERENCE: CALTRANS SOIL & ROCK LOGGING, CLASSIFICATION, AND PRESENTATION MANUAL (JUNE 2007)

PERCENT CORE RECOVERY (REC) & ROCK QUALITY DESIGNATION (RQD)

$$REC = \frac{\sum \text{Length of the recovered core pieces (inches)}}{\text{Total length of core run (inches)}} \times 100\%$$

$$RQD = \frac{\sum \text{Length of intact core pieces} \geq 4''}{\text{Total length of core run (inches)}} \times 100\%$$

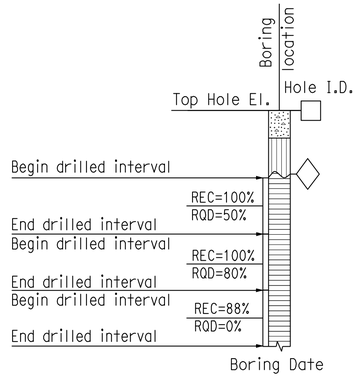

RELATIVE STRENGTH OF INTACT ROCK

Term	Uniaxial Compressive Strength (PSI)
Extremely Strong	> 30,000
Very Strong	14,500 - 30,000
Strong	7,000 - 14,500
Medium Strong	3,500 - 7,000
Weak	700 - 3,500
Very Weak	150 - 700
Extremely Weak	< 150

BEDDING SPACING

Description	Thickness / Spacing
Massive	Greater than 10 ft
Very thickly bedded	3 to 10 ft
Thickly bedded	1 to 3 ft
Moderately bedded	3-5/8" to 1 ft
Thinly bedded	1-1/4" to 3-5/8"
Very thinly bedded	3/8" to 1-1/4"
Laminated	Less than 3/8"

LEGEND OF ROCK MATERIALS

- IGNEOUS ROCK
- SEDIMENTARY ROCK
- METAMORPHIC ROCK

ROCK HARDNESS

Description	Criteria
Extremely Hard	Specimen cannot be scratched with a pocket knife or sharp pick; can only be chipped with repeated heavy hammer blows.
Very Hard	Specimen cannot be scratched with a pocket knife or sharp pick. Breaks with repeated heavy hammer blows.
Hard	Specimen can be scratched with a pocket knife or sharp pick with difficulty (heavy pressure). Heavy hammer blows required to break specimen.
Moderately Hard	Specimen can be scratched with pocket knife or sharp pick with light or moderate pressure. Core breaks with moderate hammer blows.
Moderately Soft	Specimen can be grooved 1/6" deep with a pocket knife or sharp pick with moderate or heavy pressure. Breaks with light hammer blow or heavy manual pressure.
Soft	Specimen can be grooved or gouged easily by a pocket knife or sharp pick with light pressure, can be scratched with fingernail. Breaks with light to moderate manual pressure.
Very Soft	Specimen can be readily indented, grooved or gouged with fingernail, or carved with a pocket knife. Breaks with light manual pressure.

FRACTURE DENSITY

Description	Observed Fracture Density
Unfractured	No fractures.
Very slightly fractured	Lengths greater than 3 feet.
Slightly fractured	Lengths from 1 to 3 feet with few lengths less than 1 foot or greater than 3 feet.
Moderately fractured	Lengths mostly in 4" to 1 foot range with most lengths about 8"
Intensely fractured	Lengths average from 1 to 4" with scattered fragmented intervals with lengths less than 4"
Very intensely fractured	Mostly chips and fragments with a few scattered short core lengths.

Combination descriptors (such as "Very intensely to intensely fractured") are used where equal distribution of both fracture density characteristics is present over a significant interval or exposure, or where characteristics are "in between" the descriptor definitions. Only two adjacent descriptors may be combined.

WEATHERING DESCRIPTORS FOR INTACT ROCK

Description	Diagnostic features					General Characteristics
	Chemical Weathering-Discoloration and/or oxidation		Mechanical Weathering-Grain boundary conditions (disaggregation) primarily for granitics and some coarse-grained sediments	Texture and Solutioning		
	Body of Rock	Fracture Surfaces		Texture	Solutioning	
Fresh	No discoloration, not oxidized.	No discoloration or oxidation.	No separation, intact (tight).	No change.	No solutioning.	Hammer rings when crystalline rocks are struck.
Slightly Weathered	Discoloration or oxidation is limited to surface of, or short distance from, fractures; some feldspar crystals are dull.	Minor to complete discoloration or oxidation of most surfaces.	No visible separation, intact (tight).	Preserved.	Minor leaching of some soluble minerals may be noted.	Hammer rings when crystalline rocks are struck. Body of rock not weakened.
Moderately Weathered	Discoloration or oxidation extends from fractures usually throughout; Fe-Mg minerals are "rusty," feldspar crystals are "cloudy."	All fracture surfaces are discolored or oxidized.	Partial separation of boundaries visible.	Generally preserved.	Soluble minerals may be mostly leached.	Hammer does not ring when rock is struck. Body of rock is slightly weakened.
Intensely Weathered	Discoloration or oxidation throughout; all feldspars and Fe-Mg minerals are altered to clay to some extent; or chemical alteration produces in-situ disaggregation, see grain boundary conditions.	All fracture surfaces are discolored or oxidized, surfaces friable.	Partial separation, rock is friable; in semiarid conditions granitics are disaggregated.	Texture altered by chemical disintegration (hydration, argillation).	Leaching of soluble minerals may be complete.	Dull sound when struck with hammer, usually can be broken with moderate to heavy manual pressure or by light hammer blow without reference to planes of weakness such as incipient or hairline fractures, or veinlets. Rock is significantly weakened.
Decomposed	Discolored or oxidized throughout, but resistant minerals such as quartz may be unaltered; all feldspars and Fe-Mg minerals are completely altered to clay.		Complete separation of grain boundaries (disaggregated).	Resembles a soil, partial or complete remnant rock structure may be preserved; leaching of soluble minerals usually complete.		Can be granulated by hand. Resistant minerals such as quartz may be present as "stringers" or "dikes."

Combination descriptors (such as "slightly weathered to fresh") are permissible where equal distribution of both weathering characteristics is present over significant intervals or where characteristics present are "in between" the diagnostic feature. However, combination descriptors should not be used where significant, identifiable zones can be delineated. Only two adjacent descriptors may be combined. "Very intensely weathered" is the combination descriptor for "intensely weathered to decomposed."

ENGINEERING SERVICES	GEOTECHNICAL SERVICES	STATE OF CALIFORNIA DEPARTMENT OF TRANSPORTATION	DIVISION OF ENGINEERING SERVICES STRUCTURE DESIGN DESIGN BRANCH	BRIDGE NO. 36-0114 POST MILE 10.95	SIDEHILL VIADUCT LOG OF TEST BORINGS 6 OF 6
	PREPARED BY: I.G-Remmen, 2/09		CU 05 EA 0L7014	DISREGARD PRINTS BEARING EARLIER REVISION DATES	SHEET 23 OF 23

GS LOTB ROCK LEGEND

ORIGINAL SCALE IN INCHES FOR REDUCED PLANS 0 1 2 3

REVISION DATES: 02-25-09 03-06-09 01/15/09 04/29/09 03/29/11 08/04/11

FILE => TBDSHV-s-ltb06.dgn

USERNAME => s121614 DATE PLOTTED => 01-OCT-2012 TIME PLOTTED => 08:15