Dist	COUNTY	ROUTE	KILOMETER POST TOTAL PROJECT	SHEET No.	TOTAL SHEETS
05	Mon	101	R146.8/159.7	1001	1402

Sandy L Le 5/12/10
REGISTERED CIVIL ENGINEER DATE

7-26-10
PLANS APPROVAL DATE

REGISTERED PROFESSIONAL ENGINEER SANDY L. LE No. 67065 Exp. 9-30-10 CIVIL STATE OF CALIFORNIA

THE STATE OF CALIFORNIA OR ITS OFFICERS OR AGENTS SHALL NOT BE RESPONSIBLE FOR THE ACCURACY OR COMPLETENESS OF ELECTRONIC COPIES OF THIS PLAN SHEET.

Caltrans Metric

ROADSIDE SIGN QUANTITIES

	LAMINATED POST TYPE AND LENGTH				FURNISH LAMINATED PANEL SIGN (TYPE B)		FURNISH SINGLE SHEET ALUMINUM SIGN				ROADSIDE SIGN ONE POST	ROADSIDE SIGN TWO POST	INSTALL ROADSIDE SIGN (LAMINATED WOOD BOX POST)	INSTALL SIGN (SSBM)	RESET ROADSIDE SIGN	REMOVE ROADSIDE SIGN	VEGETATION CONTROL	METAL (BARRIER MOUNTED SIGN)
							UNFRAMED		FRAMED									
	TYPE M		TYPE L		25.4 mm	63.5 mm	1.6 mm	2.0 mm	1.6 mm	2.0 mm								
	L+	R+	L+	R+														
	m	m	m	m	m2	m2	m2	m2	m2	m2	EA	EA	EA	EA	EA	EA	m2	KG
SUBTOTAL FROM SHEET SQ-1					5.40	0	2.94	8.28	1.98	6.35	6	2	2	0	5	17	23.36	0
SUBTOTAL FROM SHEET SQ-2					0	0	7.46	0.81	0	4.59	13	1	0	0	3	19	22.20	0
SUBTOTAL FROM SHEET SQ-3					0	0	6.90	1.23	2.70	1.89	7	1	0	9	0	16	11.84	0
SUBTOTAL FROM SHEET SQ-4					0	0	3.85	20.52	3.33	0	17	1	0	0	0	14	26.64	0
SUBTOTAL FROM SHEET SQ-5					0	0	16.11	6.12	0	0	25	0	0	1	0	0	37.00	0
SUBTOTAL FROM SHEET SQ-6					0	0	16.37	2.67	2.03	3.47	24	2	0	5	0	0	42.92	0
SUBTOTAL FROM SHEET SQ-7					0	0	8.27	14.94	0	0	18	0	0	2	0	9	26.64	440
SUBTOTAL FROM SHEET SQ-8	6.8	9.0	9.4	11.0	0	13.77	4.38	14.40	5.99	6.93	14	3	2	0	0	14	39.08	0
SUBTOTAL FROM SHEET SQ-9					0	0	14.76	0	2.25	0	25	1	0	0	0	2	41.44	0
SUBTOTAL FROM SHEET SQ-10					0	0	7.27	0.41	2.79	0	14	1	0	2	0	16	23.68	4
SUBTOTAL FROM SHEET SQ-11					0	0	12.17	4.73	4.17	0	18	1	0	6	0	11	29.60	2
SUBTOTAL FROM SHEET SQ-12					0	0	11.40	0	2.27	0	16	1	0	3	0	13	26.64	4
SUBTOTAL FROM SHEET SQ-13					0	0	5.84	9.72	4.64	0	11	2	0	5	0	13	22.20	2
SUBTOTAL FROM SHEET SQ-14					0	0	7.68	6.12	1.08	2.52	12	1	0	4	0	10	21.05	2
SUBTOTAL FROM SHEET SQ-15					0	0	6.79	4.14	3.24	0	13	1	0	0	1	12	22.20	0
SUBTOTAL FROM SHEET SQ-16					0	0	10.63	1.80	0	0	16	0	0	0	0	3	23.68	0
SUBTOTAL FROM SHEET SQ-17					0	0	12.45	1.85	6.49	0	19	3	0	0	0	7	37.00	0
SUBTOTAL FROM SHEET SQ-18	7.4	7.4			0	13.77	5.04	7.56	4.41	2.25	9	3	1	1	0	16	28.06	0
TOTAL	14.2	16.4	9.4	11.0	5.40	27.54	160.31	105.30	47.37	28.00	277	24	5	38	9	192	505.23(*)	454

(*) FOR TOTAL QUANTITIES SEE MINOR CONCRETE ROADWAY DESIGN QUANTITY TABLE.

OBJECT MARKER

SHEET No.	OM2-2H	OM-3R	OM-3L	OM1-3
	EA	EA	EA	EA
S-1	1			
S-5	2			1
S-8	1			1
S-9	2	1		
S-10	3			1
S-12	1			
S-13				1
S-14				2
S-15				1
S-18		2	2	
S-19				1
S-21				2
S-25		1		
S-30				1
S-33	1			
S-34	4			1
S-36				1
S-39	1			
S-40				1
SUBTOTAL	16	4	2	14
TOTAL	36			

STATE OF CALIFORNIA - DEPARTMENT OF TRANSPORTATION
Caltrans TRAFFIC DESIGN

FUNCTIONAL SUPERVISOR MOHAMMED QATAMI
CALCULATED-DESIGNED BY SANDY LE
CHECKED BY ANDREY CHEVYCHALOV
REVISED BY
DATE REVISED

SIGN QUANTITIES
SQ-19

LAST REVISION 04-15-10
DATE PLOTTED => 03-AUG-2010
TIME PLOTTED => 10:01

Dist	COUNTY	ROUTE	KILOMETER POST TOTAL PROJECT	SHEET No.	TOTAL SHEETS
05	Mon	101	R146.8/159.7	1002	1402

Caltrans Metric

REGISTERED CIVIL ENGINEER 5-16-10 DATE

7-26-10
PLANS APPROVAL DATE

REGISTERED PROFESSIONAL ENGINEER DANIEL B. MASSA No. 59095 Exp. 6/30/11 CIVIL STATE OF CALIFORNIA

THE STATE OF CALIFORNIA OR ITS OFFICERS OR AGENTS SHALL NOT BE RESPONSIBLE FOR THE ACCURACY OR COMPLETENESS OF ELECTRONIC COPIES OF THIS PLAN SHEET.

METAL BEAM GUARD RAILING

LOCATION	STATION FROM	STATION TO	MBGR (STEEL POST)	REMOVE MBGR	REMOVE DTBB	DOUBLE THRIE BEAM BARRIER (STEEL POST)	ALTERNATIVE IN-LINE TERMINAL SYSTEM	ALTERNATIVE FLARED TERMINAL SYSTEM	DOUBLE METAL BEAM GUARD RAILING (STEEL POST)	END ANCHOR ASSEMBLY(TYPE SFT)	TRASITION RAILING (TYPE WB)	BURIED POST END ANCHOR (N)	VEGETATION CONTROL (MINOR CONCRETE)	REMOVE CRASH CUSHION: SAND FILLED: NUMBER OF MODULES (N)	REMOVE CRASH CUSHION: SAND FILLED: ARRAY 'A' OR 'B'	REMOVE CRASH CUSHION: SAND FILLED: ARRAY 'U11'	REMOVE CRASH CUSHION: SAND FILLED: ARRAY 'B14'	REMOVE CRASH CUSHION: TYPE (ADIEM)	REMOVE CRASH CUSHION: TYPE (TRACC)
			m	m	m	m	EA	EA	m	EA	EA	EA	m^2	EA	EA	EA	EA	EA	EA
MAIN LINE	"M" 141+16.20 Rte 101, 23.56 Lt	"M" 141+27.60 Rte 101, 23.44 Lt	11.4					1		1			29.4						
MAIN LINE	"M" 141+62.40 Rte 101, 21.89 Rt	"M" 141+77.60 Rte 101, 22.10 Rt	15.2					1		1			38.2						
MAIN LINE	"M" 142+37.16 Rte 101, 22.32 Rt	"M" 142+60.00 Rte 101, 21.46 Rt					1				1		60.0						
MAIN LINE	"M" 142+60.00 Rte 101, 21.46 Rt	"M" 143+20.000 Rte 101, 3.0 Lt				60.0							30.0						
MAIN LINE	"M" 149+88.46 Rte 101, 24.30 Rt	"SR" 22+50.00, 14.40 Rt	1 033.7							1	1		1 341.6						
MAIN LINE	"M" 162+50.39 Rte 101, Rt	"M" 164+21.70 Rte 101, 16.95 Rt	175.6					1			1		241.2						
MAIN LINE	"M" 142+60.00 Rte 101, Lt	"M" 149+28.30 Rte 101, 24.30 Lt	661.9							1	1		856.3						
MAIN LINE	"M" 150+11.25 Rte 101, 24.30 Lt	"M" 158+71.94 Rte 101, 20.70 Lt	856.2					1			1		1 102.0						
MAIN LINE	"M" 164+51.200 Rte 101, 24.30 Lt	"M" 164+67.650 Rte 101, 20.70 Lt						1		1									
MAIN LINE	"M" 164+21.700 Rte 101, 16.497 Rt (BEG SOUNDWALL NO.2)										1								
MAIN LINE	"M" 169+80.000 Rte 101, 12.297 Rt (END SOUNDWALL NO.2)										1								
MAIN LINE	"M" 142+60.00 Rte 101, 1.61 Rt	"M" 149+41.20 Rte 101, 12.40 Lt			683.0														
MAIN LINE	"M" 149+81.64 Rte 101, 22.82 Lt	"M" 150+90.96 Rte 101, 28.48 Lt			109.0														
SALA Rd	"SR" 22+50.00, 9.60 Lt	"SR-4" 401+15.00, 8.75 Rt	140.0					1		1			196.1						
SALA Rd	"SR" 21+18.54, 8.40 Rt	"SR-3" 301+80.00, 6.00 Lt	316.4					1			1		419.3						
SALA Ramps	"SR-1" 103+50.00, 1.20 Rt	"SR-1" 103+85.00, 1.20 Rt											33.0						
SALA Ramps	"SR-2" 202+15.00, 1.20 Lt	"SR" 21+93.44, 14.40 Rt	109.8				1				1		157.9						
SALA Ramps	"SR-3" 300+14.00, 1.20 Rt	"S-3" 301+20.00, 1.20 Rt							106	1			106.0						
SALA Ramps	"SR-3" 301+20.00, 1.20 Rt	"S-3" 301+75.00, 1.20 Rt	55.0				1						6.0						
SALA Rd	"Sala Rd" 21+90.74, 9.60 Lt	"SR-4" 401+15.00, 1.20 Lt	114.4							1	1		163.7						
SALA Rd	"SR" 20+93.69, 14.55 Lt	"SR" 21+16.07, 10.17 Lt	22.8					1		1	1		47.8						
MAIN LINE	"P" 160+50.68 Rte 101, 12.37 Rt	"P" 162+54.34 Rte 101, 15.67 Rt	239.7										318.3						
MAIN LINE	"PA1" 163+24.13 Rte 101, 8.61 Rt	"PA1" 165+39.71 Rte 101, 6.31 Rt	216.6					1					289.0						
	"P" 162+74.16 Rte 101, 32.86 Rt									1									
MAIN LINE	"PA2" 166+71.13 Rte 101, 8.40 Rt	"PA2" 169+76.25 Rte 101 6.70 Rt	305.9					1					402.0						
MAIN LINE	"M" 164+25.19 Rte 101													12	1				
MAIN LINE	"M" 167+09.64Rte 101													12	1				
MAIN LINE	"N" 108+74.00 Rte 101													12	1				
MAIN LINE	"N" 111+86.00 Rte 101													12	1				
MAIN LINE	"O" 126+80.00 Rte 101																	1	
MAIN LINE	"O" 134+08.00 Rte 101													12	1				
MAIN LINE	"P" 164+33.32 Rte 101													11		1			
MAIN LINE	"P" 170+04.393 Rte 101													13			1		
MAIN LINE	"P" 172+69.25 Rte 101													12	1				
MAIN LINE	"M" 149+81.64 Rte 101, 22.82 Lt																		1
MAIN LINE	"P" 162+32.51 Rte 101, 2.21 Rt																	1	
	SUBTOTAL		4 274.6	0	792.0	60.0	3	10	106	10	11		5 837.8			8		2	1

(N) NOT A SEPARATE PAY ITEM, FOR INFORMATION ONLY

SUMMARY OF QUANTITIES

Q-1

STATE OF CALIFORNIA - DEPARTMENT OF TRANSPORTATION
Caltrans 06-DESIGN

FUNCTIONAL SUPERVISOR DAVID FRANKE
CALCULATED-DESIGNED BY RANDON HOLLAND
CHECKED BY DAN MASSA
REVISED BY
DATE REVISED

LAST REVISION 05-16-10
DATE PLOTTED => 03-AUG-2010
TIME PLOTTED => 10:01

Dist	COUNTY	ROUTE	KILOMETER POST TOTAL PROJECT	SHEET No.	TOTAL SHEETS
05	Mon	101	R146.8/159.7	1003	1402

Caltrans Metric

Eric Olson 5-16-10
REGISTERED CIVIL ENGINEER DATE

7-26-10
PLANS APPROVAL DATE

REGISTERED PROFESSIONAL ENGINEER ERIC H. OLSON No. 60801 Exp. 12/31/10 CIVIL STATE OF CALIFORNIA

THE STATE OF CALIFORNIA OR ITS OFFICERS OR AGENTS SHALL NOT BE RESPONSIBLE FOR THE ACCURACY OR COMPLETENESS OF ELECTRONIC COPIES OF THIS PLAN SHEET.

METAL BEAM GUARD RAILING

LOCATION	STATION FROM	STATION TO	MBGR (STEEL POST)	REMOVE MBGR	REMOVE DTBB	DOUBLE THRIE BEAM BARRIER (STEEL POST)	ALTERNATIVE IN-LINE TERMINAL SYSTEM	ALTERNATIVE FLARED TERMINAL SYSTEM	DOUBLE METAL BEAM GUARD RAILING (STEEL POST)	END ANCHOR ASSEMBLY(TYPE SFT)	TRASITION RAILING (TYPE WB)	BURIED POST END ANCHOR (N)	VEGETATION CONTROL (MINOR CONCRETE)	REMOVE CRASH CUSHION: SAND FILLED: NUMBER OF MODULES (N)	SAND FILLED: ARRAY 'A' OR 'B'	SAND FILLED: ARRAY 'B11'	SAND FILLED: ARRAY 'B14'	TYPE (ADIEM)	TYPE (TRACC)
	FROM	TO	m	m	m	m	EA	EA	m	EA	EA	EA	m^2	EA	EA	EA	EA	EA	EA
MAIN LINE	"O" 126+02.163, 12.678 L+	"O" 126+36.363, 12.923 L+	34.2							1		1							
MAIN LINE	"O" 126+53.196, 16.15 R+	"O" 126+83.555, 14.94 R+	22.8	30.4							1	1	57.0						
PRUNEDALE S. Rd	"PSR" 22+25.897, 6.00 R+							1			1								
PRUNEDALE S. Rd	"PSR" 24+21.320, 6.00 R+	"PSR" 26+48.68, 6.00 R+	228.0					2											
REESE CIRCLE	"RC" 25+72.241, 6.00 R+	"RC" 26+74.476, 6.00 R+	102.6				2												
SAN MIGUEL CANYON Rd	"SMC" 15+40.00, 6.0 R+	"SMC" 15+58.00, 9.6 R+	18.0	18.0				1			1								
SAN MIGUEL CANYON Rd	"SMC" 16+22.63, 6.0 R+	"SMC1" 60+66.09, 1.3 R+		175.2															
SAN MIGUEL CANYON Rd	"SMC" 16+72.70, 12.5 R+	"SMC1" 59+68.75, 4.8 R+	1.2								2								
SB OFF-RAMP	"SMC1" 60+58.82, 1.4 R+										1								
SB OFF-RAMP	"SMC1" 59+67.15, 5.9 L+	"SMC" 17+05.68, 6.9 R+		22.0															
SB OFF-RAMP	"SMC1" 59+67.15, 5.9 L+	"SMC" 17+12.78, 6.9 R+	26.0																
MAIN LINE	"S" 184+48.66 R+e 101													12		1			
MAIN LINE	"SN" 189+32.40 R+e 101, 10.8 R+	"SN" 189+43.80 R+e 101, 11.8 R+	11.4					1		1			28.5						
MAIN LINE	"S" 196+04.00 R+e 101																		1
MAIN LINE	"SN" 197+87.63 R+e 101, 10.8 R+	"SN" 198+47.64 R+e 101, 10.0 R+		61.3															
MAIN LINE	"S" 198+77.00 R+e 101																		1
MAIN LINE	"S" 200+74.67 R+e 101																		1
MAIN LINE	"SS" 193+86.00 R+e 101, 10.7 L+	"SS" 194+10.00 R+e 101, 10.7 L+		24.0															
MAIN LINE	"SS" 199+38.20 R+e 101, 14.5 L+	"SS" 199+47.60 R+e 101, 14.5 L+	9.4					1		1			23.5						
SB ON-RAMP	"CH-1" 191+81.81, 1.2 R+	"CH-1" 194+74.68, 1.2 R+	292.7					1		1			731.8						
SB ON-RAMP	"CH-1" 192+27.91, 6.0 L+	"CHCEV" 16+84.76, 9.4 L+	349.1				1			1			872.8						
NB OFF-RAMP	"CH-2" 191+81.73, 6.0 R+	"CH-2" 193+16.73, 6.0 R+	137.0				1				1		342.5						
NB OFF-RAMP	"CH-2" 192+36.93, 1.2 L+	"CH-2" 193+16.73, 1.2 L+	79.8				1				1		199.5						
NB OFF-RAMP	"CH-2" 194+85.30, 1.2 L+	"CH-2" 195+07.00, 1.2 L+	21.7							1	1		54.2						
NB OFF-RAMP	"CH-2" 194+85.30, 9.6 R+	"CH-2" 195+01.45, 9.6 R+	16.2							1	1		40.5						
SB OFF-RAMP	"CH-3" 195+15.56, 4.2 R+	"CH-3" 195+40.00, 2.6 R+	24.7					1		1			61.8						
NB ON-RAMP	"CH-4" 195+48.67, 1.2 L+	"CH-4" 197+60.00, 1.2 L+	199.6					1		1			499.0						
NB ON-RAMP	"CH-4" 195+81.52, 9.6 R+	"CH-4" 200+20.07, 6.0 R+	445.4					1			1		1113.5						
MORO Rd	"MORO" 10+37.44, 2.4 R+	"MORO" 13+40.00, 6.7 R+	326.2					2					815.5						
		FROM SQ-19											505.2						
		SUBTOTAL THIS SHEET	2 346.0	330.9	0	0	5	12	0	9	11		5 345.3			1		0	3
		SUBTOTAL FROM Q-1	4 274.6	0	792	60	3	10	106	10	11		5 837.8			8		2	1
		TOTAL	6 620.6	330.9	792	60	8	22	106	19	22		11 183.1			15			

(N) NOT A SEPARATE PAY ITEM, FOR INFORMATION ONLY

SUMMARY OF QUANTITIES

Q-2

STATE OF CALIFORNIA - DEPARTMENT OF TRANSPORTATION
Caltrans 06-DESIGN
FUNCTIONAL SUPERVISOR DAVID FRANKE
CALCULATED-DESIGNED BY RANDON HOLLAND
CHECKED BY DAN MASSA
REVISED BY A.S.
DATE REVISED 6-16-10

LAST REVISION 06-16-10 DATE PLOTTED => 03-AUG-2010 TIME PLOTTED => 10:01

Dist	COUNTY	ROUTE	KILOMETER POST TOTAL PROJECT	SHEET No.	TOTAL SHEETS
05	Mon	101	R146.8/159.7	1004	1402

Caltrans Metric

REGISTERED CIVIL ENGINEER 5-16-10 DATE

7-26-10
PLANS APPROVAL DATE

REGISTERED PROFESSIONAL ENGINEER ROY J. SHAVER No. 44587 Exp. 3/31/12 CIVIL STATE OF CALIFORNIA

THE STATE OF CALIFORNIA OR ITS OFFICERS OR AGENTS SHALL NOT BE RESPONSIBLE FOR THE ACCURACY OR COMPLETENESS OF ELECTRONIC COPIES OF THIS PLAN SHEET.

FENCE AND GATES

SHEET NO.	FENCE		GATES			REMOVE FENCE				REMOVE GATE
	CL-1.8	BW	1.8 m (CL-1.8)	3.0 m (CL-1.8)	2.4 m (BW) (N)	METAL	CL	BW	WOOD	
	m	m	EA	EA	EA	m	m	m	m	EA
L-2	340			2			334			
L-3	849			10			731			
L-4		226						224		
L-5	731	228		8			550	372		
L-7	1 030	146		14	2		1 238			
L-8	60			2						
L-9				2	2					
L-10	393			10	2					
L-11	704			12			882			
L-12	595			2			52			
L-13	477			2						
L-14	515			4						
L-15	1 034			14						
L-16	1 110			6						
L-17	59			2						
L-19	388			4						
L-22	58		1	1				84		
L-25								84	9	
L-26		173		1				298		2
L-27								165	299	1
L-28		443						130	163	
L-29		490							850	
L-30	39	173					17			
L-40		397					55	78	185	1
L-41		380				16	164	268	109	
L-42		370						388		
L-43		361			2			649	64	
L-44								66	123	
L-45		403						455	32	1
L-46		398			2					
L-47		450						120		
L-48						52			22	
L-49		600						365		
L-50		286			2			68		1
SUBTOTAL	8 382	5 544	1	96		68	4 023	3 814	1 856	6
TOTAL	8 382	5 544	1	96		9 761				6

(N) NOT A SEPARATE PAY ITEM, FOR INFORMATION ONLY.

* EXACT LOCATIONS TO BE DETERMINED BY THE ENGINEER.

SUMMARY OF QUANTITIES

Q-3

STATE OF CALIFORNIA - DEPARTMENT OF TRANSPORTATION
Caltrans 06-DESIGN

FUNCTIONAL SUPERVISOR DAVID FRANKE
CALCULATED-DESIGNED BY RANDON HOLLAND
CHECKED BY DAN MASSA
REVISED BY A.S.
DATE REVISED 6-17-10

LAST REVISION 06-17-10 DATE PLOTTED => 03-AUG-2010 TIME PLOTTED => 10:01

Dist	COUNTY	ROUTE	KILOMETER POST TOTAL PROJECT	SHEET No.	TOTAL SHEETS
05	Mon	101	R146.8/159.7	1005	1402

REGISTERED CIVIL ENGINEER 5-16-10 DATE

7-26-10
PLANS APPROVAL DATE

REGISTERED PROFESSIONAL ENGINEER DANIEL B. MASSA No. 59095 Exp. 6/30/11 CIVIL STATE OF CALIFORNIA

THE STATE OF CALIFORNIA OR ITS OFFICERS OR AGENTS SHALL NOT BE RESPONSIBLE FOR THE ACCURACY OR COMPLETENESS OF ELECTRONIC COPIES OF THIS PLAN SHEET.

Caltrans Metric

DRIVEWAYS

LOCATION	SHEET NO.	STATION	AREA (N)	HMA (TYPE A)	CLASS 2 AGGREGATE BASE	MINOR CONCRETE (Misc Construction)
			m^2	Tonne	m^3	m^3
NORTH MAIN ST	L-3	"MAIN" 46+43.000	11.0		1.7	1.1
NORTH MAIN ST	L-5	"MAIN" 49+14.000	11.0		1.7	1.1
RUSSELL ROAD	L-5	"RUSS" 15+59.440	20.0	4.6		
RUSSELL ROAD	L-5	"RUSS" 15+90.230	61.7		9.3	
HARRISON ROAD	L-5	"HARR" 49+87.36	18.0		2.7	
RUSSELL ROAD	L-6	"RUSS" 16+23.309	25.7	5.9		
RUSSELL ROAD	L-6	"RUSS" 16+58.085	60.4	13.9		
RUSSELL ROAD	L-6	"RUSS" 17+12.136	16.7	3.8		
RUSSELL ROAD	L-6	"RUSS" 17+63.956	16.0	3.7		
HARRISON ROAD	L-7	"HARR" 53+19.670	11.0			1.2
HARRISON ROAD	L-8	"HARR" 53+90.46	90.0		13.5	
HARRISON ROAD	L-8	"HARR" 54+21.78	41.3		6.2	
HARRISON ROAD	L-9	"HARR" 56+10.14	30.3		4.5	
HARRISON ROAD	L-9	"HARR" 57+40.88	46.8		7.0	
HARRISON ROAD	L-9	"HARR" 57+51.98	25.5		3.8	
HARRISON ROAD	L-9	"HARR" 57+98.53	45.9		6.9	
HARRISON ROAD	L-9	"HARR" 57+49.39	150.0		22.5	
HARRISON ROAD	L-10	"HARR" 61+73.13	159.0		23.9	
GIANNINI ROAD	L-12	"GR" 57+68.014			2.8	1.0
ROUTE 101	L-15	"M" 164+33.295	64.5		9.7	
ROUTE 101	L-17	"M" 164+31.076	163.0		23.5	0.7
SCHOCH ROAD	L-17	"SCHR" 64+56.671 (CUL-DE-SAC)	6.4	1.5		0.8
SCHOCH ROAD	L-17	"SCHR" 64+89.107	43.6	10.0		0.8
SCHOCH ROAD	L-17	"SCHR" 66+26.932	44.6	10.3		0.8
SCHOCH ROAD	L-17	"SCHR" 66+80.649	103.9	24.0		0.8
MARTINES ROAD	L-19	"MAR" (CUL-DE-SAC)	35.8	8.3		
MARTINES ROAD	L-19	"MAR" (CUL-DE-SAC)	44.9		6.7	
BLACKIE ROAD	L-24	"BR" 30+33.381, 9.51 Rt			1.9	
BLACKIE ROAD	L-24	"BR" 31+20.195, 12.65 Rt			0.8	
BLACKIE ROAD	L-25	"BR" 31+60.119, 12.86 Rt			0.9	
BLACKIE ROAD	L-25	"BR" 31+85.890, 16.25 Rt			2.5	
BLACKIE ROAD	L-25	"BR" 32+46.434, 21.01 Lt			5.0	
BLACKIE ROAD	L-25	"BR" 33+02.663, 14.55 Rt	25.0	7.2		
BLACKIE ROAD	L-25	"BR" 33+19.091, 14.32 Rt	40.6	11.7		
BLACKIE ROAD	L-25	"BR" 33+49.537, 13.20 Lt	34.0	9.8		
PRUNDALE S. ROAD (Exist)	L-25	"PSRE" 31+53.080, 20.65 Rt	61.3	17.7		
PRUNDALE S. ROAD (Exist)	L-25	"PSRE" 31+86.361, 8.61 Lt	52.8	15.2		
PRUNDALE S. ROAD (Exist)	L-25	"PSRE" 31+87.031, 8.47 Rt			3.3	
REESE CIRCLE	L-26	"RC" 26+85.340, 12.38 Lt	43.5	12.5		
REESE CIRCLE	L-26	"RC" 26+99.298, 22.39 Rt			14.4	
REESE CIRCLE	L-26	"RC" 27+42.027, 10.54 Lt			5.0	
REESE CIRCLE	L-26	"RC" 27+83.468, 11.26 Lt			3.3	
CROSS ROAD	L-26	"CR" 27+70.743, 14.25 Lt	72.7	20.9		
CROSS ROAD	L-27	"CR" 28+32.042, 14.19 Lt	40.8	11.8		
CROSS ROAD	L-27	"CR" 29+04.797, 18.58 Rt	43.2	12.4		1.2
CROSS ROAD	L-27	"CR" 29+28.461, 13.96 Lt	93.6	27.0		
CROSS ROAD	L-27	"CR" 29+78.437, 9.77 Lt			1.9	
Basin C1, C2, and C3 Access			1 480		222.0	
Basin I Access			860		144.0	
Basin H,I,K,L, and M Access			3 220		483.0	
		SHEET TOTAL		232.2	1 034.4	9.5

(N) NOT A SEPARATE PAY ITEM, FOR INFORMATION ONLY.

SUMMARY OF QUANTITIES

Q-4

STATE OF CALIFORNIA - DEPARTMENT OF TRANSPORTATION
Caltrans 06-DESIGN
FUNCTIONAL SUPERVISOR DAVID FRANKE
CALCULATED-DESIGNED BY RANDON HOLLAND
CHECKED BY DAN MASSA
REVISED BY A.S.
DATE REVISED 6-17-10

LAST REVISION 05-16-10
DATE PLOTTED => 03-AUG-2010
TIME PLOTTED => 10:02

Dist	COUNTY	ROUTE	KILOMETER POST TOTAL PROJECT	SHEET No.	TOTAL SHEETS
05	Mon	101	R146.8/159.7	1006	1402

Caltrans Metric

Eric Olson 5-16-10
REGISTERED CIVIL ENGINEER DATE

7-26-10
PLANS APPROVAL DATE

REGISTERED PROFESSIONAL ENGINEER ERIC H. OLSON No. 60801 Exp. 12/31/10 CIVIL STATE OF CALIFORNIA

THE STATE OF CALIFORNIA OR ITS OFFICERS OR AGENTS SHALL NOT BE RESPONSIBLE FOR THE ACCURACY OR COMPLETENESS OF ELECTRONIC COPIES OF THIS PLAN SHEET.

DRIVEWAYS

LOCATION	SHEET NO.	STATION	AREA (N)	HMA (TYPE A)	CLASS 2 AGGREGATE BASE	MINOR CONCRETE (Misc Construction)
			m^2	Tonne	m^3	m^3
CROSS ROAD	L-27	"CR" 29+90.394, 7.53 R+				2.1
CROSS ROAD	L-27	"CR" 30+00.000, 7.5 R+				2.6
CROSS ROAD	L-27	"CR" 30+82.594, 9.88 R+		3.4		1.2
PESANTE ROAD	L-29	"PR" 33+49.403, 8.874 L+			2.4	
PESANTE ROAD	L-29	"PR" 34+03.854, 8.238 L+	7.9	2.3		0.7
PESANTE ROAD	L-29	"PR" 34+16.968, 8.273 L+	12.4	3.6		
PESANTE ROAD	L-29	"PR" 34+41.296, 9.500 R+	63.5	18.3		
ORCHARD LANE	L-29	"OL" 31+47.328, 11.464 L+			3.1	
ORCHARD LANE	L-29	"OL" 31+54.336, 11.383 R+			3.1	
ORCHARD LANE	L-29	"OL" 31+62.552, 9.656 L+	22.2	6.4		
ORCHARD LANE	L-29	"OL" 31+65.594, 11.252 R+			4.9	
ORCHARD LANE	L-30	"OC" 30+20.682, 12.428 L+			3.7	
ORCHARD LANE	L-30	"OC" 30+27.436, 10.730 L+			3.7	
ORCHARD LANE	L-30	"OC" 30+80.335, 9.830 L+	25.8	7.4		
ORCHARD CUL DE SAC	L-30	"O" 129+86.361, 67.741 R+			5.0	
ORCHARD CUL DE SAC	L-30	"O" 130+25.798, 31.744 R+	197.0	56.8		
SAN MIGUEL CANYON ROAD	L-34	"SMC" 17+88.960, 16.56 R+	53.0			5.4
SAN MIGUEL CANYON ROAD	L-34	"SMC" 18+73.493, 15.95 R+	78.0			7.9
ROUTE 101	L-39	"SN" 185+93.620, 18.2 R+	186.0	43.7		
ROUTE 101	L-40	"SN" 188+41.030, 19.2 R+	74.3	17.5		
CRAZY HORSE CANYON ROAD	L-44	"CHCEV" 10+37.81, 12.0 R+	78.5	18.4		
CRAZY HORSE CANYON ROAD	L-44	"CHCEV" 10+48.754, 9.8 L+	176.7	41.5		
CRAZY HORSE CANYON ROAD	L-44	"CHCEV" 11+72.330, 15.7 R+	50.2	11.8		
ECHO VALLEY ROAD	L-46	"CHCEV" 18+70.000, 25.6 L+	128.2	30.1		
ECHO VALLEY ROAD	L-46	"CHCEV" 18+70.000, 35.2 R+	186.1	43.7		
ECHO VALLEY COURT	L-48	"EV" 11+28.794, 9.3 R+	34.2	8.0		
ECHO VALLEY COURT	L-48	"EV" 11+26.340, 9.0 L+	40.4	9.5		
ECHO VALLEY COURT	L-48	"EV" 10+90.725, 9.4 R+	42.3	9.9		
ECHO VALLEY COURT	L-48	"EV" 10+89.600, 8.9 L+	37.5	8.8		
ECHO VALLEY COURT	L-48	"EV" 10+60.807, 16.2 L+	143.6	33.7		
ECHO VALLEY ROAD	L-48	"CHCEV" 22+35.240, 27.9 R+	167.4	39.3		
ECHO VALLEY ROAD	L-48	"CHCEV" 22+64.756, 14.4 R+	35.6	8.4		
ECHO VALLEY ROAD	L-48	"CHCEV" 22+78.122, 11.0 L+	71.5			7.5
ECHO VALLEY ROAD	L-48	"CHCEV" 22+94.096, 10.6 R+	33.5	7.9		
ECHO VALLEY ROAD	L-48	"CHCEV" 23+31.111, 9.3 R+	53.7	12.6		
ECHO VALLEY CT	L-50	"EV" 13+36.542, 4.0 R+	40.3	9.5		
ECHO VALLEY CT	L-50	"EV" 13+55.419, 11.42 L+	38.1	9.0		
BASIN C1, C2, C3 Gravel Dwy	L-3	"M" 146+54.995, 51.736			148	
BASIN I Gravel Dwy	L-15	"M" 162+79.065, 58.337 R+			94	
BASIN H, J, K, L, M Gravel Dwy	L-15	"M" 162+59.517, 74.84 L+			334	
		THIS SHEET TOTAL		298.5	601.9	27.4
		FROM SHEET Q-4		232.2	1034.4	9.5
		TOTAL		530.7*	1636.3*	36.9**

(N) NOT A SEPARATE PAY ITEM, FOR INFORMATION ONLY.
* QUANTITY INCLUDED IN ROADWAY QUANTITIES TABLE ON SHEET Q-6.
** QUANTITY INCLUDED IN MINOR CONCRETE (MISC CONSTRUCTION) TABLE ON SHEET Q-9.

SUMMARY OF QUANTITIES

Q-5

STATE OF CALIFORNIA - DEPARTMENT OF TRANSPORTATION
Caltrans 06-DESIGN
FUNCTIONAL SUPERVISOR DAVID FRANKE
CALCULATED-DESIGNED BY RANDON HOLLAND
CHECKED BY DAN MASSA
REVISED BY A.S.
DATE REVISED 6-17-10

LAST REVISION 06-17-10 DATE PLOTTED => 03-AUG-2010 TIME PLOTTED => 10:02

Dist	COUNTY	ROUTE	KILOMETER POST TOTAL PROJECT	SHEET No.	TOTAL SHEETS
05	Mon	101	R146.8/159.7	1007	1402

Ronnie K. Kier 5-16-10
REGISTERED CIVIL ENGINEER DATE

7-26-10
PLANS APPROVAL DATE

REGISTERED PROFESSIONAL ENGINEER RONNIE K. KIER No. C60877 Exp. 12/31/11 CIVIL STATE OF CALIFORNIA

THE STATE OF CALIFORNIA OR ITS OFFICERS OR AGENTS SHALL NOT BE RESPONSIBLE FOR THE ACCURACY OR COMPLETENESS OF ELECTRONIC COPIES OF THIS PLAN SHEET.

Caltrans Metric

ROADWAY QUANTITIES

LOCATION	TACK COAT	HMA (Type A)	CLASS 2 AB	ROADWAY EXCAVATION: ROADWAY EXCAVATION	ROADWAY EXCAVATION: REMOVE AC SURFACING	EMBANKMENT (N)	COLD PLANE AC Pvmt	PCC	LCB
	Tonne	Tonne	m^3	m^3	m^3	m^3	m^2	m^3	m^3
FROM SHEET SCQ-1	139.6	91 945	76 425	343 070	3 120	793 410	10 105	7 550	5 900
FROM SHEET SCQ-2	31.8	13 630	8 120	173 465	30	35 800	5 570		
FROM SHEET SCQ-3	11.4	4 810	2 685	5 360		590	4 755		
FROM SHEET SCQ-4	57.5	25 270	10 825	497 190	300	381 858	20 365		
FROM SHEET SCQ-5	41.9	17 895	2 975	5 565	6 845	1 690	3 405		
FROM SHEET Q-5		530	1637						
FROM SHEET Q-14		640							
SUBTOTAL				1 024 650	10 295				
TOTAL	282.2	154 720	102 667	1 034 945		1 213 348	44 200	7 550	5 900

(N) NOT A SEPARATE PAY ITEM, FOR INFORMATION ONLY.
* INCLUDES VOLUME FOR PLACE HOT MIX ASPHALT (MISCELLANEOUS AREA).

SUMMARY OF QUANTITIES

Q-6

CALCULATED-DESIGNED BY DAN MASSA
CHECKED BY RONNIE KIER
REVISED BY
DATE REVISED
FUNCTIONAL SUPERVISOR DAVID FRANKE
STATE OF CALIFORNIA - DEPARTMENT OF TRANSPORTATION
Caltrans 06-DESIGN

LAST REVISION 05-16-10 DATE PLOTTED => 03-AUG-2010 TIME PLOTTED => 10:02

Dist	COUNTY	ROUTE	KILOMETER POST TOTAL PROJECT	SHEET No.	TOTAL SHEETS
05	Mon	101	R146.8/159.7	1008	1402

Caltrans Metric

REGISTERED CIVIL ENGINEER 5-16-10 DATE

7-26-10
PLANS APPROVAL DATE

REGISTERED PROFESSIONAL ENGINEER DANIEL B. MASSA No. 59095 Exp. 6/30/11 CIVIL STATE OF CALIFORNIA

THE STATE OF CALIFORNIA OR ITS OFFICERS OR AGENTS SHALL NOT BE RESPONSIBLE FOR THE ACCURACY OR COMPLETENESS OF ELECTRONIC COPIES OF THIS PLAN SHEET.

CONCRETE BARRIER

LAYOUT SHEET No.	LOCATION FROM	LOCATION TO	REMOVE CONCRETE BARRIER	CONCRETE BARRIER (Type 60)	CONCRETE BARRIER (Type 60C)	CONCRETE BARRIER (Type 60S)	CONCRETE BARRIER (Type 60SC)	CONCRETE BARRIER (Type 60SE)	CONCRETE BARRIER (Type 736B)
			m	m	m	m	m	m	m
L-2, L-3, L-5	"M" 143+20.00 Rte 101	"M" 149+28.24 Rte 101		608.0					
L-3, L-5	"M" 147+40.00 Rte 101, 24.60 Rt	"M" 149+08.38 Rte 101, 24.30 Rt							171.0
L - 05	"M" 150+90.96 Rte 101, 28.48 Lt	"M" 151+20.00 Rte 101, 31.61 Lt	28.6						
L - 07	"M" 151+20.00 Rte 101, 31.59 Lt	"M" 154+30.00 Rte 101, 44.01 Lt	305.4						
L - 11	"M" 154+30.00 Rte 101, 44.00 Lt	"M" 157+16.31 Rte 101, 43.47 Lt	285.0						
L - 12	"M" 157+16.38 Rte 101, 43.47 Lt	"M" 159+35.00 Rte 101, 24.09 Lt	216.3						
L - 13	"M" 159+35.00 Rte 101, 24.09 Lt	"M" 161+10.00 Rte 101, 4.84 Lt	176.2						
L - 15	"M" 161+10.00 Rte 101, 4.84 Lt	"M" 164+25.19 Rte 101, 0.50 Rt	315.5						
L - 16	"M" 167+09.64Rte 101, 0.05 Rt	"M" 168+50.00 Rte 101, 0.35 Lt	140.4						
L - 19	"M" 168.50.00 Rte 101, 0.34 Lt	"M" 169+90.00 Rte 101	140.0						
L-5, L-7, L-11to L-16, L-19	"M" 149+99.83 Rte 101	"M" 169+90.00 Rte 101		1 990.0					
L-20, L-21	"N" 108+74.00 Rte 101	"N" 111+86.00 Rte 101			312.0				
L-22	"O" 123+70.00 Rte 101	"O" 126+80.00 Rte 101	310.0						
L-22	"O" 123+70.00 Rte 101	"O" 124+80.00 Rte 101		110.0					
L-22	"O" 124+80.00 Rte 101	"O" 125+40.00 Rte 101			60.0				
L-22	"O" 125+40.00 Rte 101	"O" 126+00.00 Rte 101		60.0					
L-22	"O" 126+00.00 Rte 101	"O" 126+40.00 Rte 101			40.0				
L-22	"O" 126+40.00 Rte 101	"O" 126+90.00 Rte 101		50.0					
L-22, L-30, L-31	"O" 126+90.00 Rte 101	"O" 132+00.00 Rte 101			510.0				
L-31	"O" 132+00.00 Rte 101	"O" 132+90.00 Rte 101		90.0					
L-31	"O" 132+90.00 Rte 101	"O" 134+00.00 Rte 101			110.0				
L-31	"O" 134+00.00 Rte 101	"O" 134+08.00 Rte 101		8.0					
L-32, L-33	"P" 155+60.00 Rte 101	"P" 159+03.00 Rte 100					343.0		
L - 32, L - 33, L - 35	"P" 155+60.00 Rte 101	"P" 162+32.51 Rte 101, 2.2 Rt	698.4						
L-33	"P" 159+05.17 Rte 101	"P" 159+38.96 Rte 101	33.8						
L-33	"P" 159+03.00 Rte 101	"P" 159+45.00 Rte 101						42.0	
L-33, L-35, L-36	"P" 159+45.00 Rte 101	"P" 164+41.25 Rte 101					496.3		
L-38	"P" 170+04.39 Rte 101	"P" 172+77.75 Rte 101					273.4		
L-39, L-40	"S" 184+48.66 Rte 101	"S" 190+30.00 Rte 101					581.3		
L-40, L-41	"S" 190+30.00 Rte 101	"S" 190+60.00 Rte 101				30.0			
L-41	"S" 190+60.00 Rte 101	"S" 193+60.00 Rte 101					300.0		
L-41, L-43	"S" 193+60.00 Rte 101	"S" 195+60.00 Rte 101				200.0			
L-43, L-49, L-50	"S" 195+60.00 Rte 101	"S" 199+50.00 Rte 101					390.0		
L-43, L-49	"S" 196+04.00 Rte 101	"S" 198+77.00 Rte 101	273.0						
L-50	"S" 199+50.00 Rte 101	"S" 199+90.00 Rte 101				40.0			
L-50	"S" 199+90.00 Rte 101	"S" 201+40.00 Rte 101					150.0		
L-50	"S" 200+84.00 Rte 101	"S" 201+40.00 Rte 101	56.0						
		TOTAL	2 978.6	2 916.0	1 032.0	270.0	2 534.0	42.0	171.0

SUMMARY OF QUANTITIES

Q-7

STATE OF CALIFORNIA - DEPARTMENT OF TRANSPORTATION
Caltrans 06-DESIGN

FUNCTIONAL SUPERVISOR DAVID FRANKE
CALCULATED-DESIGNED BY RANDON HOLLAND
CHECKED BY DAN MASSA
REVISED BY
DATE REVISED

LAST REVISION 05-16-10 DATE PLOTTED => 03-AUG-2010 TIME PLOTTED => 10:02

Dist	COUNTY	ROUTE	KILOMETER POST TOTAL PROJECT	SHEET No.	TOTAL SHEETS
05	Mon	101	R146.8/159.7	1009	1402

REGISTERED CIVIL ENGINEER 5-16-10 DATE

7-26-10
PLANS APPROVAL DATE

REGISTERED PROFESSIONAL ENGINEER ROY J. SHAVER No. 44587 Exp. 3/31/12 CIVIL STATE OF CALIFORNIA

THE STATE OF CALIFORNIA OR ITS OFFICERS OR AGENTS SHALL NOT BE RESPONSIBLE FOR THE ACCURACY OR COMPLETENESS OF ELECTRONIC COPIES OF THIS PLAN SHEET.

Caltrans Metric

MINOR CONCRETE (MISCELLANEOUS CONSTRUCTION)

LOCATION	STATIONS		SIDEWALK *	CURBS A1-150	CURBS A2-150	CURBS A2-200	CURBS B1-100	GUTTER (Type V) **	CONCRETE CROSS GUTTER	DRIVEWAY
			m^3	m^3	m^3	m^3	m^3	m^3	m^3	m^3
Main Road	"Main" 46+70.00	"Main" 49+23.00				39.4				
Russell Rd (Lt)	"Russ" 13+22.00	"Russ" 13+32.00				3.0				
Russell Rd (Rt)	"Russ" 13+87.00	"Russ" 15+46.00				28.0				
Russell Rd (Lt)	"Russ" 13+61.00	"Russ" 15+38.00				28.0				
Russell Rd (Rt)	"Russ" 15+57.00	"Russ" 15+72.00				3.9				
Harrison Rd (Lt)	"Harr" 49+69.00	"Harr" 53+41.00				57.5				
Harrison Rd (Rt)	"Harr" 58+55.00	"Harr" 53+41.00				23.3				
Harrison Rd (Lt)	"Harr" 59+30.00	"Harr" 60+10.00				13.6				
Giannini Rd (Lt)	"GR" 50+25.00	"GR" 57+37.00				110.8				
Schoch at White Rd (Both sides)	"SCHR" 65+60.84	"SCHR" 65+86.57			4.3					
Schoch at Martin Rd (Both sides)	"SCHR" 67+01.21	"SCHR" 67+16.32			3.6					
Russell Rd (Lt)	13+84 TO 14+70 "RUSS" LINE	ISLAND & NOSE		11.3						
Russell Rd at Main SE Corner	"Main" 49+11.84	"Russ" 13+21.79	2.5							
Russell Rd (Lt)	"Russ" 13+60.00	"Russ" 15+42.00	53.5							
Russell Rd (Rt)	"Russ" 13+87.00	"Russ" 15+45.00	50.8							
Giannini Rd (Lt)	"GR" 50+72.00	"GR" 57+52.21	99.3							
Harrison Rd (Lt)	"Harr" 58+57.00	"Harr" 60+02.00	45.0							
Harrison Rd (Rt)	"Harr" 59+60.00	"SR" 24+34.16	26.0							
Giannini Rd (Rt)	"GR" 50+32.00	"GR" 57+37.4	21.0					106.0		
Schoch Rd (Both sides)	"SCHR" 64+57.62	"SCHR" 67+16.32						68.9		
White Rd (Both sides)	"WR" 65+66.29	"WR" 67+08.47						47.2		
PRUNDALE SOUTH ROAD	"PSR" 20+09.194, 15.081 Lt		2.2							
PRUNDALE SOUTH ROAD	"PSR" 28+86.577, 15.751 Lt		2.2							
CROSS ROAD	"CR" 29+04.797, 18.576 Rt									1.2
CROSS ROAD	"CR" 29+90.394, 7.534 Rt									2.1
CROSS ROAD	"CR" 30+00.000, 7.497 Rt									2.6
CROSS ROAD	"CR" 30+82.594, 9.883 Rt									1.2
PESANTE ROAD	"PR" 34+03.854, 8.238 Lt									0.7
POLLOCK LANE	"PL" 31+36.831, 5.090 Lt	"PL" 31+63.122, 5.090 Lt							11.1	
PRUNDALE SOUTH ROAD	"RC" 25+83.166, 9.491 Lt	"PSR" 22+21.824 6.000 Lt	63.4							
PRUNDALE SOUTH ROAD	"PSR" 22+83.734, 6.000 Lt	"PSR" 32+31.643, 9.795 Lt	173.4							
CROSS ROAD	"CR" 28+31.735, 4.290 Rt	"CR" 31+08.167, 4.290 Rt						38.4		
CROSS ROAD	"CR" 28+41.516, 4.290 Lt	"CR" 29+88.007, 4.290 Lt						20.4		
POLLOCK LANE	"PL" 29+59.550, 5.090 Rt	"PL" 33+09.985, 5.090 Rt						48.7		
POLLOCK LANE	"PL" 29+56.833, 5.090 Lt	"PL" 31+34.981, 5.090 Lt						24.8		
POLLOCK LANE	"PL" 31+64.972, 5.090 Lt	"PL" 33+07.871, 5.090 Lt						19.9		
PRUNDALE SOUTH ROAD	"PSR" 20+13.847, 11.020 Lt	"PSR" 22+21.824, 6.000 Lt				33.1				
PRUNDALE SOUTH ROAD	"PSR" 22+83.734, 6.000 Lt	"PSR" 28+81.205, 12.840 Lt				94.1				
CROSS ROAD	"CR" 31+55.646, 5.200 Lt	"PL" 29+26.442, 6.000 Lt			1.7					
CROSS ROAD	"CR" 31+32.886, 5.200 Lt	"PL" 29+26.442, 6.000 Rt			1.7					
		SHEET TOTAL	539.3	11.3	11.3	434.7	0	374.3	11.1	7.8

* SIDEWALK INCLUDES CURB RAMPS AND DRIVEWAYS CONNECTED TO THEM.

** GUTTER (TYPE V) INCLUDES DRIVEWAY.

SUMMARY OF QUANTITIES
Q-8

STATE OF CALIFORNIA - DEPARTMENT OF TRANSPORTATION
Caltrans 06-DESIGN
FUNCTIONAL SUPERVISOR DAVID FRANKE
CALCULATED-DESIGNED BY RANDON HOLLAND
CHECKED BY DAN MASSA
REVISED BY
DATE REVISED

LAST REVISION 05-16-10 | DATE PLOTTED => 03-AUG-2010 | TIME PLOTTED => 10:02

Dist	COUNTY	ROUTE	KILOMETER POST TOTAL PROJECT	SHEET No.	TOTAL SHEETS
05	Mon	101	R146.8/159.7	1010	1402

Caltrans Metric

Eric Olson 5-16-10
REGISTERED CIVIL ENGINEER DATE

7-26-10
PLANS APPROVAL DATE

REGISTERED PROFESSIONAL ENGINEER ERIC H. OLSON No. 60801 Exp. 12/31/10 CIVIL STATE OF CALIFORNIA

THE STATE OF CALIFORNIA OR ITS OFFICERS OR AGENTS SHALL NOT BE RESPONSIBLE FOR THE ACCURACY OR COMPLETENESS OF ELECTRONIC COPIES OF THIS PLAN SHEET.

MINOR CONCRETE (MISCELLANEOUS CONSTRUCTION)

LOCATION	STATIONS		SIDEWALK *	CURBS A1-150	CURBS A2-150	CURBS A2-200	CURBS B1-100	GUTTER (Type V) **	CONCRETE CROSS GUTTER	DRIVEWAY
			m^3	m^3	m^3	m^3	m^3	m^3	m^3	m^3
SAN MIGUEL CANYON ROAD	"SMC" 17+45.00, 11.34 R+	"SMC" 17+80.83, 12.95 R+			5.2					
SAN MIGUEL CANYON ROAD	"SMC" 17+88.96, 14.8 R+									2.7
SAN MIGUEL CANYON ROAD	"SMC" 17+91.09, 7.47 L+									1.9
SAN MIGUEL CANYON ROAD	"SMC" 17+94.19, 16.63 R+	"SMC" 18+66.16, 15.95 R+	10.6		10.1					
SAN MIGUEL CANYON ROAD	"SMC" 17+95.68, 8.2 L+	"SMC" 18+18.23, 8.78 L+			3.2					
SAN MIGUEL CANYON ROAD	"SMC" 18+22.85, 10.39 L+									1.9
SAN MIGUEL CANYON ROAD	"SMC" 18+27.50, 9.0 L+	"PNR" 10+34.21, 8.1 R+			6.4					
SAN MIGUEL CANYON ROAD	"SMC" 18+55.23, 9.21 L+	"PNR" 10+34.21, 8.1 R+	4.3							
SAN MIGUEL CANYON ROAD	"SMC" 18+73.49, 15.95 R+									3.3
SAN MIGUEL CANYON ROAD	"SMC" 18+80.87, 15.95 R+	"SMC" 18+88.90, 11.8 R+	2.4		1.2					
SAN MIGUEL CANYON ROAD	"PNR" 10+39.07, 7.9 L+	"SMC" 19+26.00, 10.8 L+	9.3		7.1					
SAN MIGUEL CANYON ROAD	"SMC" 19+14.82, 12.2 R+	"SMC" 19+49.94, 12.7 R+	5.1		5.1					
CRAZY HORSE CANYON ROAD	"CHCEV" 12+25.00, 6.0 L+	"CHCEV" 12+35.00, 6.0 L+	1.5			1.4				
CRAZY HORSE CANYON ROAD	"CHCEV" 12+25.00, 6.0 R+	"CHCEV" 12+35.00, 6.0 R+	1.5			1.4				
CRAZY HORSE CANYON ROAD	"CHCEV" 13+80.00, 9.3 L+	"CH-2" 195+01.46, 9.6 L+	14.3			15.4				
CRAZY HORSE CANYON ROAD	"CHCEV" 13+80.00, 7.2 R+	"CH-4" 195+61.52, 6.0 R+	13.9			15.3				
CRAZY HORSE CANYON ROAD	"CH-4" 195+37.23, 1.2 L+	"CHCEV" 14+93.81, 9.6 R+	6.7			3.3				
CRAZY HORSE CANYON ROAD	"CH-2" 195+07.00, 1.2 L+	"CHCEV" 14+99.15, 10.8 L+	6.9			3.4				
CRAZY HORSE CANYON ROAD	"CHCEV" 15+51.21, 9.6 R+	"CH-3" 195+15.56, 4.8 R+	6.1			3.0				
CRAZY HORSE CANYON ROAD	"CHCEV" 15+56.54, 10.8 L+	"CH-1" 194+86.12, 1.2 R+	7.0			3.4				
CRAZY HORSE CANYON ROAD	"CHCEV" 22+78.12, 4.2 L+									7.2
		SUBTOTAL	89.6	0	38.3	46.6	0	0	0	17.0
		FROM SHEET Q-8	539.3	11.3	11.3	434.7	0	374.3	11.1	7.8
		FROM SHEET Q-5	0	0	0	0	0	0	0	36.9
		SUBTOTAL THIS SHEET	1618.2							
		FROM SHEET DQ-63	428.97							
		TOTAL	2 047.17							

* SIDEWALK INCLUDES CURB RAMPS AND DRIVEWAYS CONNECTED TO THEM.
** GUTTER (TYPE V) INCLUDES DRIVEWAY.

SUMMARY OF QUANTITIES
Q-9

STATE OF CALIFORNIA - DEPARTMENT OF TRANSPORTATION
Caltrans 06-DESIGN
FUNCTIONAL SUPERVISOR DAVID FRANKE
CALCULATED-DESIGNED BY CARLOS GONZALEZ
CHECKED BY ERIC OLSON
REVISED BY
DATE REVISED

LAST REVISION 05-16-10 | DATE PLOTTED => 03-AUG-2010 | TIME PLOTTED => 10:02

Dist	COUNTY	ROUTE	KILOMETER POST TOTAL PROJECT	SHEET No.	TOTAL SHEETS
05	Mon	101	R146.8/159.7	1011	1402

REGISTERED CIVIL ENGINEER 5-16-10 DATE

7-26-10
PLANS APPROVAL DATE

REGISTERED PROFESSIONAL ENGINEER DANIEL B. MASSA No. 59095 Exp. 6/30/11 CIVIL STATE OF CALIFORNIA

THE STATE OF CALIFORNIA OR ITS OFFICERS OR AGENTS SHALL NOT BE RESPONSIBLE FOR THE ACCURACY OR COMPLETENESS OF ELECTRONIC COPIES OF THIS PLAN SHEET.

SOUND WALL ITEMS

SOUND WALL / LOL STATION TO LOL STATION	SOUND WALL (BARRIER) (MASONRY BLOCK)	CONCRETE BARRIER (TYPE 736 SV)	400 mm CIDH Conc PILING (BARRIER)	ACCESS GATES (N)	STRUCTURAL CONCRETE, ANCHOR BLOCK TRANSITION
	m^2	m	m	EA	m^3
SOUND WALL 1 / "M" LINE STA 142+80.000 TO STA 144+10.000	321	150	468	1	1
SOUND WALL 2 / "M" LINE STA 164+21.700 TO STA 169+80.000	1 874	558	1 707	2	2
TOTAL	2 195	718	2 175	3	3

(N) NOT A SEPARATE PAY ITEM, FOR INFORMATION ONLY.

MINOR CONCRETE (EXPOSED AGGREGATE CONCRETE)

LOCATION	STATION TO STATION	MINOR CONCRETE (TEXTURE PAVING)
		m^2
SB ON RAMP SALA Rd	"SR-1" LINE 101+88.00 TO 102+20.00	136
NB OFF RAMP SALA Rd	"SR-2" LINE 200+82.49 TO 201+24.92	202
SB OFF RAMP SALA Rd	"SR-3" LINE 303+33.83 TO 303+63.11	241
NB ON RAMP SALA Rd	"SR-4" LINE 401+89.79 TO 402+38.27	234
SB ON RAMP ECHO VALLEY Rd	"CH-1" LINE 189+91.48 TO 190+47.72	238
NB OFF RAMP CRAZY HORSE CANYON Rd	"CH-2" LINE 190+57.69 TO 191+15.15	280
SB OFF RAMP ECHO VALLEY Rd	"CH-3" LINE 197+86.98 TO 198+19.84	141
NB ON CRAZY HORSE CANYON Rd	"CH-4" LINE 198+13.01 TO 198+56.92	191
	TOTAL	1663

RETAINING WALL QUANTITIES

WALL No.	STRUCTURAL CONCRETE (RETAINING WALL)	CONCRETE BARRIER (TYPE 736A)	CONCRETE BARRIER (TYPE 60D)	STRUCTURE EXCAVATION (RETAINING WALL)	STRUCTURE BACKFILL (RETAINING WALL)	ARCHITECTURAL TREATMENT (DRYSTACK STONE TEXTURE)	PERVIOUS BACKFILL MATERIAL (N)	BAR REINFORCING STEEL	CABLE RAILING
	m^3	m	m	m^3	m^3	m^2	m^3	Kg	m
WALL No. 10	205.6		115.8	632.4	519.7	154.7	90.9	9 391.3	115.7
WALL No. 18	97.6	33.5		236.3	155.3	87.3	18.4	3 958.9	
TOTAL	303.2	33.5	115.8	868.7	675.0	242.0	109.3	13 350.2	115.7*

(N) NOT A SEPARATE PAY ITEM, FOR INFORMATION ONLY.

* SEE CABLE RAILING TABLE ON SHEET Q-11 FOR TOTAL QUANTITY.

CONCRETE PAVEMENT JOINT SEALANT

LOCATION	SEAL PAVEMENT JOINT	SEAL LONGITUDINAL ISOLATION JOINT
	m	m
SB ON RAMP SALA Rd	6 762	4 692
TOTAL	6 762	4 692

TRANSVERSE WEAKENED PLANE JOINTS SHALL BE TYPE A1 COMPRESSION SEAL.
LONGITUDINAL WEAKENED PLANE JOINTS SHALL BE TYPE A2 LIQUID SEALANT.

SUMMARY OF QUANTITIES

Q-10

REVISED BY | DATE REVISED
RANDON HOLLAND | DAN MASSA
CALCULATED-DESIGNED BY | CHECKED BY
FUNCTIONAL SUPERVISOR: DAVID FRANKE

STATE OF CALIFORNIA - DEPARTMENT OF TRANSPORTATION
Caltrans 06-DESIGN

LAST REVISION 05-16-10 | DATE PLOTTED => 03-AUG-2010 | TIME PLOTTED => 13:01

Dist	COUNTY	ROUTE	KILOMETER POST TOTAL PROJECT	SHEET No.	TOTAL SHEETS
05	Mon	101	R146.8/159.7	1012	1402

REGISTERED CIVIL ENGINEER 5-16-10 DATE

7-26-10
PLANS APPROVAL DATE

REGISTERED PROFESSIONAL ENGINEER ROY J. SHAVER No. 44587 Exp. 3/31/12 CIVIL STATE OF CALIFORNIA

THE STATE OF CALIFORNIA OR ITS OFFICERS OR AGENTS SHALL NOT BE RESPONSIBLE FOR THE ACCURACY OR COMPLETENESS OF ELECTRONIC COPIES OF THIS PLAN SHEET.

Caltrans Metric

RELOCATE MAILBOX

LOCATION	FROM STATION	FROM SHEET No.	TO* STATION	TO* SHEET No.	EA
ESPINOSA ROAD	"RUSS" 16+66.182, 7.6 R+	6	"RUSS" 16+64.550, 9.8 R+	6	1
ESPINOSA ROAD	"RUSS" 16+35.505, 6.96 R+	6	"RUSS" 16+40.216, 13.05 R+	6	3
ROUTE 101 (GROUP A)	"M" 164+62.580, 18.9 R+	15	"SCHR" 64+51.860, 11.33 L+	17	5
ROUTE 101 (GROUP B)	"M" 165+16.962, 18.65 R+	16	"SCHR" 64+95.100, 6.68 L+	17	7
ROUTE 101 MAIL BOX C	"M" 165+28.360, 18.6 R+	16	"SCHR" 65+00.644, 6.75 L+	17	1
ROUTE 101 MAIL BOX D	"M" 166+29.661, 18.78 R+	16	"SCHR" 66+31.051, 6.6 L+	17	1
ROUTE 101 MAIL BOX E	"M" 166+80.467, 18.5 R+	16	"SCHR" 66+84.412, 6.7 L+	17	1
ROUTE 101 (GROUP F)	"M" 167+34.835, 19.68 R+	16	"MBOX" 67+92.08, 3.5 L+	18	2
ROUTE 101 MAIL BOX G	"M" 168+01.217, 18.43 R+	16	"MBOX" 68+06.29, 3.5 L+	18	1
ROUTE 101 MAIL BOX H	"M" 168+20.451, 18.68 R+	16	"MBOX" 69+31.47, 3.5 L+	18	1
BLACKIE ROAD	"BR" 33+00.000, 1.2 L+	25	"BR" 33+00.000, 7.4 L+	25	1
BLACKIE ROAD	"BR" 33+53.091, 3.8 L+	25	"BR" 33+51.431, 7.4 L+	25	1
REESE CIRCLE	"RC" 26+67.641, 0.9 R+	26	"RC" 26+67.641, 7.0 R+	26	1
REESE CIRCLE	"RC" 26+74.051, 0.9 R+	26	"RC" 26+74.051, 7.0 R+	26	2
CROSS ROAD	"CR" 28+30.038, 3.5 R+	27	"CR" 28+30.038, 6.0 R+	27	2
CROSS ROAD	"CR" 29+20.000, 8.7 R+	27	"CR" 29+20.000, 8.7 R+	27	1
CROSS ROAD	"CR" 29+27.879, 3.1 R+	27	"CR" 29+27.879, 6.0 R+	27	1
CROSS ROAD	"CR" 31+12.071, 4.2 R+	28	"CR" 31+12.071, 6.5 R+	28	1
ROUTE 101	"SN" 190+10.0 13.0 R+	40	"SN" 188+46.0 14.0 R+	40	2
CRAZY HORSE CANYON ROAD	"CHCEV" 13+53 8.0 R+	45	"CHCEV" 12+05 14.0 R+	45	1
ECHO VALLEY ROAD	"CHCEV" 22+43 20.0 R+	48	"CHCEV" 22+39 7.0 R+	48	2
ECHO VALLEY ROAD	"CHCEV" 22+69 10.0 R+	48	"CHCEV" 22+70 8.0 R+	48	1
ECHO VALLEY ROAD	"CHCEV" 23+00 6.0 R+	48	"CHCEV" 23+02 7.0 R+	48	3
ECHO VALLEY COURT	"EV" 10+51 20.0 R+	48	"CHCEV" 10+50 7.0 R+	48	2
			TOTAL		44

* EXACT LOCATIONS TO BE DETERMINED BY THE ENGINEER.

ADJUST UTILITY COVERS TO GRADE

SHEET	STATION	WATER VALVE EA	MONITORING WELLS EA
L-29	"PR" 33+91 4.5 R+	3	
L-34	"SMC" 18+56 13.5 L+		1
L-34	"SMC" 18+58 17.0 R+		1
L-34	"NPR" 10+33 4.5 L+		1
L-34	"SMC" 18+88 7.2 L+		1
L-34	"SMC" 19+29 14.0 L+		1
L-34	"SMC" 19+47 17.0 R+		3
L-34	"SMC" 19+58 5.4 L+		1
L-34	"SMC" 19+58 11.7 R+		6
	Total	18	

ROCK BLANKET

LOCATION SHEET	LOCATION STATION LIMITS	m^2
C-1	"RUSS" 13+86 TO 14+70	193.2
	TOTAL	193.2

ABANDON WATER WELL

LOCATION SHEET	LOCATION STATION AND OFFSET	EA
L-44	10+38.00 "DWYI" 3.0 L+	1
	TOTAL	1

CABLE RAILING

LOCATION	STATION TO STATION	m
JARVIS DITCH	"M" 146+81.608 TO "M" 146+94.710	72.0
BLACKIE ROAD	"BR" 31+81.032 TO "BR" 32+66.582	13.6
BLACKIE ROAD	"BR" 32+29.016 TO "BR" 32+48.700	20.8
PRUNDALE SOUTH ROAD	"PSR" 27+55.443 TO "BR" 32+40.698	44.3
FROM SHEET Q-10		115.7
	TOTAL	266.4

DITCH EXCAVATION

LOCATION	STATION TO STATION	m^3
BLACKIE ROAD WETLAND	"WL" 10+00.000 TO "WL" 11+90.331	2 163.1
REESE CIRCLE DITCH	"BA" 10+00.000 TO "BA" 10+59.249	37.0
	TOTAL	2 200.1

SUMMARY OF QUANTITIES

Q-11

STATE OF CALIFORNIA - DEPARTMENT OF TRANSPORTATION
Caltrans 06-DESIGN

FUNCTIONAL SUPERVISOR DAVID FRANKE
CALCULATED-DESIGNED BY RANDON HOLLAND
CHECKED BY DAN MASSA
REVISED BY
DATE REVISED

LAST REVISION 05-16-10 DATE PLOTTED => 03-AUG-2010 TIME PLOTTED => 13:02

Dist	COUNTY	ROUTE	KILOMETER POST TOTAL PROJECT	SHEET No.	TOTAL SHEETS
05	Mon	101	R146.8/159.7	1013	1402

Caltrans Metric

REGISTERED CIVIL ENGINEER 5-16-10 DATE

7-26-10
PLANS APPROVAL DATE

REGISTERED PROFESSIONAL ENGINEER DANIEL B. MASSA No. 59095 Exp. 6/30/11 CIVIL STATE OF CALIFORNIA

THE STATE OF CALIFORNIA OR ITS OFFICERS OR AGENTS SHALL NOT BE RESPONSIBLE FOR THE ACCURACY OR COMPLETENESS OF ELECTRONIC COPIES OF THIS PLAN SHEET.

HOT MIX ASPHALT DIKE

LOCATION	STATION FROM	STATION TO	PLACE HMA DIKE (TYPE A)	PLACE HMA DIKE (TYPE C)	PLACE HMA DIKE (TYPE D)	PLACE HMA DIKE (TYPE E)	PLACE HMA DIKE (TYPE F)	HOT MIX ASPHALT
			m	m	m	m	m	TONNE
MAIN LINE	"M" 142+37.16 R+	"M" 142+60.00 R+	22.8					0.8
MAIN LINE/SALA Rd	"M" 149+88.46, 24.3 R+	"SR" 22+50.00, 14.4 R+					658.2	10.5
SALA Rd	"SR" 22+38.00, 9.6 L+	"SR-4" 401+15.00, 8.75 R+					128.8	2.1
SALA Rd/MAIN LINE	"SR-4" 402+50.39, 12.23 R+	"M" 164+21.70, 16.95 R+					175.6	6.5
MAIN LINE	"M" 142+49.56, R+	"M" 142+57.16, R+		7.6				0.2
SALA Rd	"SR" 22+38.00, 2.4 R+	"SR" 22+60.00, 2.4 R+		22.0				0.5
SALA Rd	"SR-4" 402+42.79 R+	"SR" 402+50.39 R+		7.6				0.2
MAIN LINE	"M" 169+86.76 R+	"M" 170+05.76 R+		19.0				0.4
SALA Rd	"SR" 22+50.00 R+	"SR" 24+34.16 R+						11.2
SALA Rd	"SR" 22+60.00 L+	"SR" 24+11.37 L+						9.6
SALA Rd	"SR-3" 301+70.00, 6.0 R+	"SR-3" 301+90.00, 6.0 R+		20.0				0.4
MAIN LINE	"M" 142+60.00, 20.85 L+	"M" 149+28.06, 24.30 R+					662.0	24.4
MAIN LINE	"M" 150+11.25, 24.3 L+	"M" 158+71.95, 20.7 L+					853.2	13.6
SALA Rd	"SR" 21+18.54, 14.4 R+	"SR-3" 301+70.00, 6.2 L+					150.9	2.4
SALA Rd	"SR" 20+93.69, 14.55 L+	"SR" 20+16.07, 10.17 L+					22.8	0.4
MAIN LINE	"M" 164+55.50, 13.79 L+	"M" 164+91.20, 13.5 L+		35.7				0.3
SALA Rd/MAIN LINE	"SR-3" 301+90.00, 6.0 L+	"M" 164+58.94, 13.79 L+				284.0		17.7
MAIN LINE	"M" 164+91.20, 10.2 L+	"M" 169+90.00, 10.2 L+				1 123.4		30.3
SALA Rd	"SR-1" 100.00.15, 6.60 R+	"SR-1" 100+07.62, 6.6 R+		7.5				0.2
MAIN LINE	"P" 160+50.68, 12.37 R+	"P" 162+54.34, 20.5 R+					199.7	3.2
MAIN LINE	"P" 162+54.34, 16.67 R+	"P" 162+75.28, 17.44 R+		23.5				0.2
MAIN LINE	"PA1" 162+96.103, 11.28 R+	"PA1" 163+24.13, 8.61 R+		28.1				0.6
MAIN LINE	"PA1" 163+24.13, 8.61 R+	"PA1" 163+39.71, 6.31 R+					215.1	7.9
MAIN LINE	"PA2" 166+46.82, 11.35 R+	"PA2" 166+71.13, 8.4 R+		28.1				0.6
MAIN LINE	"PA2" 166+71.13, 8.4 R+	"PA2" 169+76.25, 6.7 R+					305.7	11.3
MARTINES ROAD	"MAR" 69+94.096, 12.05 L+	"MAR" 70+01.123, 8.29 R+	18.0					
		THIS SHEET TOTAL	40.8	199.1	0	1 407.4	3 372.0	155.5

SUMMARY OF QUANTITIES

Q-12

STATE OF CALIFORNIA - DEPARTMENT OF TRANSPORTATION
Caltrans 06-DESIGN

FUNCTIONAL SUPERVISOR DAVID FRANKE

CALCULATED-DESIGNED BY RANDON HOLLAND
CHECKED BY DAN MASSA

REVISED BY
DATE REVISED

LAST REVISION 05-16-10
DATE PLOTTED => 03-AUG-2010
TIME PLOTTED => 13:02

Dist	COUNTY	ROUTE	KILOMETER POST TOTAL PROJECT	SHEET No.	TOTAL SHEETS
05	Mon	101	R146.8/159.7	1014	1402

REGISTERED CIVIL ENGINEER 5-16-10 DATE

7-26-10
PLANS APPROVAL DATE

REGISTERED PROFESSIONAL ENGINEER ROY J. SHAVER No. 44587 Exp. 3/31/12 CIVIL STATE OF CALIFORNIA

THE STATE OF CALIFORNIA OR ITS OFFICERS OR AGENTS SHALL NOT BE RESPONSIBLE FOR THE ACCURACY OR COMPLETENESS OF ELECTRONIC COPIES OF THIS PLAN SHEET.

Caltrans Metric

HOT MIX ASPHALT DIKE

LOCATION	STATION FROM	STATION TO	PLACE HMA DIKE (TYPE A)	PLACE HMA DIKE (TYPE C)	PLACE HMA DIKE (TYPE D)	PLACE HMA DIKE (TYPE E)	PLACE HMA DIKE (TYPE F)	HOT MIX ASPHALT
			m	m	m	m	m	TONNE
BLACKIE ROAD	"BR" 30+12.94, 4.77 R+	"BR" 32+06.07, 16.38 R+	154.9					11.8
BLACKIE ROAD	"BR" 30+10.00, 3.60 L+	"BR" 30+37.00, 3.60 L+	27.0					2.1
BLACKIE ROAD	"BR" 32+24.64, 20.46 R+	"BR" 33+59.93, 3.57 R+	125.2					9.5
BLACKIE ROAD	"BR" 32+31.64, 9.80 L+	"BR" 32+41.10, 9.17 L+	9.5					0.7
PRUNDALE SOUTH ROAD	"PSR" 20+12.55, 15.91 R+	"PSR" 22+04.63, 6.00 R+	192.1					14.6
PRUNDALE SOUTH ROAD	"PSR" 22+04.63, 6.00 R+	"PSR" 22+25.90, 6.00 R+		21.3				0.5
PRUNDALE SOUTH ROAD	"PSR" 22+93.10, 6.00 R+	"PSR" 24+01.78, 6.00 R+	105.3					8.0
PRUNDALE SOUTH ROAD	"PSR" 24+01.78, 6.00 R+	"PSR" 24+21.32, 6.00 R+		18.9				0.4
PRUNDALE SOUTH ROAD	"PSR" 24+21.32, 6.00 R+	"PSR" 26+48.68, 6.00 R+					228.0	8.4
PRUNDALE SOUTH ROAD	"PSR" 26+48.68, 6.00 R+	"PSR" 26+67.60, 6.00 R+		19.1				0.4
PRUNDALE SOUTH ROAD	"PSR" 26+67.60, 6.00 R+	"BR" 31+62.17, 6.00 L+	226.8					17.2
PRUNDALE SOUTH ROAD	"PSR" 20+28.45, 10.00 L+	"PSR" 22+21.87, 10.00 L+	201.3					15.3
PRUNEDALE SOUTH Rd (Exist)	"PSRE" 31+95.90, 3.17 L+	"PSRE" 32+14.82, 2.90 L+	18.9					1.4
REESE CIRCLE	"RC" 25+28.18, 3.64 R+	"RC" 25+72.24, 6.00 R+		44.3				0.9
REESE CIRCLE	"RC" 25+72.24, 6.00 R+	"RC" 26+74.48, 6.00 R+					102.6	3.8
REESE CIRCLE	"RC" 26+74.48, 6.00 R+	"RC" 26+93.83, 6.00 R+		19.7				0.4
REESE CIRCLE	"RC" 27+04.77, 6.00 R+	"RC" 28+26.29, 6.00 R+	115.6					8.8
REESE CIRCLE	"RC" 26+20.25, 16.09 L+	"RC" 28+00.00, 3.60 R+	130.9					10.0
REESE CIRCLE	"RC" 27+44.17, 7.56 R+	"RC" 27+58.79, 5.87 R+	15.2					1.2
CROSS ROAD	"CR" 27+32.99, 6.73 L+	"CR" 28+27.13, 5.20 L+	81.0					6.2
CROSS ROAD	"CR" 29+89.84, 5.20 L+	"CR" 31+55.65, 5.20 L+	165.8					12.6
CROSS ROAD	"CR" 31+10.00, 5.20 R+	"CR" 31+59.68, 16.00 R+	64.9					4.9
CROSS ROAD	"CR" 31+73.95, 15.40 R+	"CR" 32+16.90, 2.72 R+	48.5					3.7
CROSS ROAD	"CR" 31+82.89, 5.20 L+	"CR" 32+16.90, 2.84 L+	34.1					2.6
POLLOCK LANE	"PL" 29+26.44, 6.00 L+	"PL" 29+50.84, 6.00 L+	24.4					1.9
POLLOCK LANE	"PL" 29+26.44, 6.00 R+	"PL" 29+55.00, 6.00 R+	28.6					2.2
PESANTE ROAD	"PR" 33+75.72, 5.04 L+	"PL" 33+83.84, 11.32 L+	11.4					0.9
ORCHARD LANE	"OL" 31+31.75, 2.95 R+	"OL" 32+40.12, 5.20 R+	84.1					6.4
ORCHARD LANE	"OL" 31+31.75, 2.50 L+	"OL" 32+41.98, 5.20 L+	106.1					8.1
ORCHARD CUL DE SAC	"OC" 30+32.98, 5.20 L+	"OC" 31+00.00, 4.08 L+	58.9					4.5
ORCHARD CUL DE SAC	"OC" 30+24.51, 10.58 R+	"OC" 31+00.00, 3.87 R+	78.0					5.9
ORCHARD CUL DE SAC			35.4					2.7
SAN MIGUEL CANYON ROAD	"SMC" 15+40.00, 9.00 R+	"SMC" 15+43.89, 10.60 R+				4.4		0.3
SAN MIGUEL CANYON ROAD	"SMC" 15+40.00, 9.00 R+	"SMC" 15+43.89, 10.60 R+				11.3		0.7
PRUNEDALE NORTH ROAD	"NPR" 10+15.00, 4.10 L+	"NPR" 10+39.07, 7.93 L+	29.8					2.3
PRUNEDALE NORTH ROAD	"NPR" 10+15.00, 4.92 R+	"NPR" 10+34.21, 8.10 R+	15.5					1.2
SAN MIGUEL CANYON ROAD	"SMC1" 59+67.15, 5.86 L+	"SMC" 17+12.77, 9.6 R+					26.0	1.0
SAN MIGUEL CANYON ROAD	"SMC" 17+12.77, 9.6 R+	"SMC" 17+45.00, 11.34 R+				32.2		2.0
MAIN LINE	"P" 160+50.68, 12.4 R+	"P" 162+54.34, 15.7 R+					203.7	7.5
MAIN LINE	"P" 162+54.34, 15.7 R+	"P" 162+95.28, 17.4 R+		41.0				0.8
MAIN LINE	"PA1" 162+96.10, 11.3 R+	"PA1" 163+24.13, 8.6 R+		28.0				0.6
MAIN LINE	"PA2" 166+46.82, 11.4 R+	"PA2" 166+71.13, 8.4 R+		24.3				0.5
MAIN LINE	"PA2" 166+71.13, 8.4 R+	"PA2" 169+76.25, 6.7 R+					215.6	8.0
MAIN LINE	"O" 125+92.658, 12.0 L+	"O" 126+02.163, 11.8 L+		9.5				0.2
MAIN LINE	"O" 126+02.163, 11.8 L+	"O" 126+38.268, 12.3 L+					36.1	1.3
		THIS SHEET TOTAL	2 189.2	226.1	0	47.9	812.0	204.4

SUMMARY OF QUANTITIES

Q-13

STATE OF CALIFORNIA - DEPARTMENT OF TRANSPORTATION
Caltrans 06-DESIGN

FUNCTIONAL SUPERVISOR DAVID FRANKE
CALCULATED-DESIGNED BY RITCHIE FERRER
CHECKED BY ROY J. SHAVER
REVISED BY
DATE REVISED

LAST REVISION 05-16-10 DATE PLOTTED => 03-AUG-2010 TIME PLOTTED => 13:02

Dist	COUNTY	ROUTE	KILOMETER POST TOTAL PROJECT	SHEET No.	TOTAL SHEETS
05	Mon	101	R146.8/159.7	1015	1402

Caltrans Metric

Eric Olson 5-16-10
REGISTERED CIVIL ENGINEER DATE

7-26-10
PLANS APPROVAL DATE

REGISTERED PROFESSIONAL ENGINEER ERIC H. OLSON No. 60801 Exp. 12/31/10 CIVIL STATE OF CALIFORNIA

THE STATE OF CALIFORNIA OR ITS OFFICERS OR AGENTS SHALL NOT BE RESPONSIBLE FOR THE ACCURACY OR COMPLETENESS OF ELECTRONIC COPIES OF THIS PLAN SHEET.

HOT MIX ASPHALT DIKE

LOCATION	STATION FROM	STATION TO	PLACE HMA DIKE (TYPE A)	PLACE HMA DIKE (TYPE C)	PLACE HMA DIKE (TYPE D)	PLACE HMA DIKE (TYPE E)	PLACE HMA DIKE (TYPE F)	HOT MIX ASPHALT
			m	m	m	m	m	TONNE
MAIN LINE	"SN" 186+16.28, 10.8 R+	"SN" 188+39.01, 19.2 R+				226.4		13.8
MAIN LINE	"SN" 188+43.07, 19.2 R+	"SN" 189+21.00, 10.8 R+				82.1		5.1
MAIN LINE	"SN" 189+21.00, 10.8 R+	"SN" 189+32.40, 10.8 R+		11.4				0.2
MAIN LINE	"SN" 189+32.40, 10.8 R+	"SN" 189+43.80, 10.8 R+					11.4	0.4
MAIN LINE	"SN" 189+43.80, 10.8 R+	"CH-2" 191+66.49, 6.0 R+				93.7		5.8
MAIN LINE	"SN" 190+56.80, 10.8 R+	"SN" 191+13.94, 11.5 R+				57.2		3.6
MAIN LINE	"SN" 193+21.94, 11.7 R+	"SN" 194+70.00, 11.7 R+				148.1		9.3
MAIN LINE	"SN" 198+48.72, 19.4 R+	"SN" 199+96.56, 14.2 R+					146.9	5.4
MAIN LINE	"SN" 201+83.68, 11.1 R+	"SN" 201+98.85, 10.8 R+				15.2		0.9
MAIN LINE	"SS" 187+40.00, 14.1 L+	"SS" 188+57.88, 15.8 L+			119.0			17.8
MAIN LINE/SB ON-RAMP	"SS" 189+31.74, 16.7 L+	"CH-1" 192+27.91 , 6.0 L+				296.0		18.4
MAIN LINE	"SS" 189+91.04, 10.8 L+	"SS" 194+95.44, 13.8 L+				504.4		31.3
MAIN LINE	"SS" 198+10.15, 11.2 L+	"SS" 198+48.58, 10.8 L+				38.4		2.4
MAIN LINE	"SS" 200+60.00, 14.4 L+	"SS" 201+40.00, 9.6 L+				80.9		5.0
CRAZY HORSE CANYON ROAD	"CHCEV" 10+55.00, 6.0 L+	"CHCEV" 11+11.50, 6.0 L+	58.3					4.4
CRAZY HORSE CANYON ROAD	"CHCEV" 11+50.00, 6.0 L+	"CHCEV" 12+21.31, 6.0 L+	71.3					5.4
CRAZY HORSE CANYON ROAD	"CHCEV" 11+87.13, 6.0 R+	"DWY2" 10+11.00, 3.0 R+	12.1					0.9
CRAZY HORSE CANYON ROAD	"DWY2" 10+13.810, 3.0 L+	"CHCEV" 12+21.71, 6.0 R+	25.0					1.9
ECHO VALLEY ROAD	"CHCEV" 16+10.00, 9.6 R+	"CH-3" 195+23.67, 6.0 L+				42.8		2.7
ECHO VALLEY ROAD	"CHCEV" 21+69.94, 6.0 R+	"EV" 10+85.90, 4.2 R+	81.3					6.2
ECHO VALLEY ROAD	"EV" 10+46.45, 6.0 L+	"CHCEV" 22+26.30, 6.0 R+	75.6					5.7
ECHO VALLEY ROAD	"CHCEV" 22+38.50, 6.0 R+	"CHCEV" 22+59.30, 6.0 R+	21.1					1.6
ECHO VALLEY ROAD	"CHCEV" 22+50.00, 4.2 L+	"CHCEV" 22+69.924, 4.2 L+	19.7					1.5
ECHO VALLEY ROAD	"CHCEV" 22+86.27, 4.2 L+	"CHCEV" 23+30.00, 4.2 L+	43.7					3.3
SB OFF-RAMP/ECHO VALLEY	"CH-1" 192+27.91, 6.0 L+	"CHCEV" 16+11.03, 13.5 L+					272.9	10.3
NB OFF-RAMP	"CH-2" 190+58.30, 6.0 R+	"CH-2" 191+66.49, 6.0 R+	108.2					6.7
NB OFF-RAMP	"CH-2" 191+66.49, 6.0 R+	"CH-2" 193+02.00, 6.0 R+	137.4					5.1
NB OFF-RAMP	"CH-2" 192+79.37, 1.2 L+	"CH-2" 192+24.00, 1.2 L+	44.6					1.6
NB OFF-RAMP	"CH-2" 194+78.00, 9.6 R+	"CH-2" 195+01.45, 9.6 R+	23.5					0.9
SB OFF-RAMP/MAINLINE	"CH-3" 195+23.15, 7.0 L+	"SS" 199+10.03, 15.6 R+			356.1			53.4
SB OFF-RAMP	"CH-3" 195+15.56, 4.8 R+	"CH-3" 195+22.80, 4.8 R+					7.2	0.3
NB ON-RAMP	"CH-4" 195+59.67, 1.2 L+	"CH-4" 197+61.91, 1.2 L+					201.5	7.4
NB ON-RAMP	"CH-4" 197+61.91, 1.2 L+	"CH-4" 198+56.92, 1.2 L+				93.3		5.8
ECHO VALLEY COURT	"EV" 10+73.59, 4.7 L+	"EV" 10+85.17, 4.2 L+	12.4					0.9
ECHO VALLEY COURT	"EV" 10+95.42, 4.2 L+	"EV" 11+20.63, 4.2 L+	25.2					1.9
ECHO VALLEY COURT	"EV" 10+96.43, 4.2 R+	"EV" 11+21.02, 4.2 R+	24.6					1.9
EMERGENCY ACCESS ROAD	"EA" 10+21.53, 18.0 R+	"EA" 11+84.53, 6.0 R+				172.3		10.7
MORO ROAD	"MORO" 10+65.91, 3.6 L+	"MORO" 13+46.38, 5.8 L+	268.9					20.3
		SUBTOTAL	1 052.9	11.4	475.1	1 850.8	602.6	280.2
		TOTAL FROM Q-12	40.8	199.1	0	1 407.4	3 372.0	155.5
		TOTAL FROM Q-13	2 189.2	226.1	0	47.9	812.0	204.4
		TOTAL	3 282.9	516.6	475.1	3 306.1	4 786.6	640.1 *

* SEE ROADWAY QUANTITIES TABLE, SHEET Q-6 FOR TOTAL.

SUMMARY OF QUANTITIES

Q-14

STATE OF CALIFORNIA - DEPARTMENT OF TRANSPORTATION
Caltrans
06-DESIGN

FUNCTIONAL SUPERVISOR: DAVID FRANKE
CALCULATED-DESIGNED BY: CARLOS GONZALEZ
CHECKED BY: ERIC OLSON
REVISED BY / DATE REVISED

LAST REVISION 05-16-10
DATE PLOTTED => 03-AUG-2010
TIME PLOTTED => 13:02

Dist	COUNTY	ROUTE	KILOMETER POST TOTAL PROJECT	SHEET No.	TOTAL SHEETS
05	Mon	101	R146.8/159.7	1016	1402

LICENSED LANDSCAPE ARCHITECT

7-26-10
PLANS APPROVAL DATE

LICENSED LANDSCAPE ARCHITECT SCOTT P. DOWLAN No. 4410 Signature 9/30/10 Renewal Date 05/17/10 Date Signed STATE OF CALIFORNIA

THE STATE OF CALIFORNIA OR ITS OFFICERS OR AGENTS SHALL NOT BE RESPONSIBLE FOR THE ACCURACY OR COMPLETENESS OF SCANNED COPIES OF THIS PLAN SHEET.

Caltrans Metric

IRRIGATION CROSSOVERS AND IRRIGATION SLEEVES

LOCATION			SIDE		CHDPE PIPE CONDUIT			WSP PIPE CONDUIT	IRRIGATION SLEEVE	(N) WATER LINE CROSSOVER	(N) SPRINKLER CONTROL CROSSOVER
SHEET	LINE	STATION	L+	R+	SIZE (mm) DN 200	250	300	SIZE (mm) DN 200	SIZE (mm) DN 50	SIZE (mm) DN	SIZE (mm) DN
					LENGTH (m)			LENGTH (m)	LENGTH (m)		
C-41	RUSS	14+15 TO 14+73		X		58				75	75
C-42	SR-3	300+07	X	X	13					65	50
C-42	SR-3	301+37	X	X	9					65	50
C-42	SR-1	104+35	X	X	11					65	50
C-42	SR	22+30	X	X			27			100	75
C-42	SR-2	202+98	X	X			13			100	75
C-42	SR-4	400+27	X	X	13					65	50
C-43	PSR	22+17	X	X	20					65	50
C-43	PSR	22+90	X	X	20					65	50
C-43	PSR	25+66	X	X	17					65	50
C-44	SMC	16+75	X	X				22		50	-
C-45	CH-1	194+64	X	X			10			(2) 65	50
C-45	CH-3	195+22	X	X		14				75	75
C-45	CH-4	195+63	X	X	11					65	50
C-45	CH-2	193+05	X	X	9					65	50
C-45	CH-2	195+00	X	X			13			(2) 65	50
C-45	CHCEV	14+85	X	X		29				75	75
C-45	CHCEV	16+30	X	X		22				75	75
C-46	CHCEV	10+50	X				5			150	-
C-46	CHCEV	11+15 TO 11+55	X				40			150	-
C-47	EA	11+88	X	X		8				75	75
C-47	CHCEV	18+70	X			8				75	75
C-47	CHCEV	20+75	X	X	14					65	50
PI-1	OC	30+00	X	X					9	-	-
PI-1	OC	30+20		X					7	-	-
				TOTAL	137	139	108	22	16		

(N) - NOT A SEPARATE PAY ITEM FOR INFORMATION ONLY
DN - DIAMETER NOMINAL
X - DENOTES REQUIREMENT

CHDPE - CORRUGATED HIGH DENSITY POLYETHYLENE PIPE
WSP - WELDED STEEL PIPE (6.35 mm THICK)

EXTEND IRRIGATION CROSSOVERS

LOCATION			SIDE		EXTEND CHDPE PIPE CONDUIT	CB	OL	(N) WATER LINE CROSSOVER	(N) SPRINKLER CONTROL CROSSOVER
SHEET	LINE	STATION	L+	R+	SIZE (mm) DN 250			SIZE (mm) DN	SIZE (mm) DN
					LENGTH (m)				
C-44	SMC	15+55		X	4	X		50	50
				TOTAL	4				

(N) - NOT A SEPARATE PAY ITEM FOR INFORMATION ONLY
DN - DIAMETER NOMINAL
X - DENOTES REQUIREMENT

CB - COUPLING BAND
OL - OVERLAP

IRRIGATION PIPE

LOCATION			SIDE		GALVANIZED STEEL PIPE	PLASTIC PIPE (SUPPLY LINE)
SHEET	LINE	STATION	L+	R+	SIZE (mm) DN 75	SIZE (mm) DN 25
					LENGTH (m)	LENGTH (m)
C-43	PRS	22+85 TO 25+55	X			290
C-44	SMC	16+20 TO 16+75		X	56	
				TOTAL	56	290

WATER METERS

LOCATION					
SHEET	LINE	STATION LIMITS	L+	R+	EA
C-46	CHCEV	10+45	X		1
C-46	CHCEV	12+15	X		1
				TOTAL	2

TRANSPLANT TREE

LOCATION (FROM)			LOCATION (TO)					
SHEET	LINE	STATION	SHEET	LINE	STATION	SPECIES	DISCRIPTION	EA
EC-53	BR	30+70 L+	PP-1	BR	30+95 L+	WILLOW	MULTI-TRUNK	1
EC-53	BR	30+90 L+	PP-1	BR	31+02 L+	WILLOW	MULTI-TRUNK	1
EC-53	BR	31+40 L+	PP-1	BR	31+20 L+	WILLOW	MULTI-TRUNK	1
							TOTAL	3

LIVE SILTATION

LOCATION					LENGTH m	(N) COBBLE m^3	(N) ORGANIC FERTILIZER kg	(N) BRANCHES EA
SHEET	LINE	STATION LIMITS	L+	R+				
PP-1	BR	30+23 TO 30+45	X		22	5.50	0.02	220
PP-1	BR	30+47 TO 30+71	X		24	6.00	0.02	240
PP-1	BR	30+70 TO 30+87	X		17	4.25	0.02	170
PP-1	BR	30+98 TO 31+31	X		33	8.25	0.03	330
PP-1	BR	31+38 TO 31+55	X		17	4.25	0.02	170
PP-1	BR	31+57 TO 31+74	X		17	4.25	0.02	170
PP-1	BR	31+59 TO 31+71	X		12	3.00	0.02	120
				TOTAL	142	35.5	0.15	1 420

(N) - NOT A SEPARATE PAY ITEM. FOR INFORMATION ONLY.

BRUSH LAYERING

LOCATION					LENGTH m	(N) RSP FACING m^3	(N) RSP FABRIC TYPE A m^2	(N) RECP (NETTING) TYPE C m^2	(N) ORGANIC FERTILIZER kg	(N) BRANCHES EA
SHEET	LINE	STATION LIMITS	L+	R+						
PP-5	M	190+15 TO 190+36		X	42	34	140	250	1.5	504
				TOTAL	42	34	140	250	1.5	504

(N) - NOT A SEPARATE PAY ITEM. FOR INFORMATION ONLY.

LEGEND

M - STATE ROUTE 101 LINE
RUSS - RUSSEL RD LINE
SR - SALA RD LINE
SR-1 - SALA RD SB ONRAMP LINE
SR-2 - SALA RD NB OFFRAMP LINE
SR-3 - SALA RD SB OFFRAMP LINE
SR-4 - SALA RD NB ONRAMP LINE
BR - BLACKIE RD LINE
RC - REESE CR LINE
CR - CROSS RD LINE
PL - POLLOCK LN LINE
OC - ORCHARD LN LINE
PSR - PRUNEDALE SOUTH RD LINE
SMC - SAN MIGUEL CANYON RD LINE
CH-1 - CRAZY HORSE CANYON RD SB ONRAMP LINE
CH-2 - CRAZY HORSE CANYON RD NB OFFRAMP LINE
CH-3 - CRAZY HORSE CANYON RD SB OFFRAMP LINE
CH-4 - CRAZY HORSE CANYON RD NB ONRAMP LINE
CHCEV - CRAZY HORSE CANYON RD LINE AND ECHO VALLEY RD LINE
EA - EMERGENCY ACCESS RD LINE

SUMMARY OF QUANTITIES

Q-15

REVISED BY | DATE REVISED
SCOTT DOWLAN | CORBY KILMER
CALCULATED-DESIGNED BY | CHECKED BY
SENIOR LANDSCAPE ARCHITECT | DENNIS REEVES
STATE OF CALIFORNIA - DEPARTMENT OF TRANSPORTATION
Caltrans LANDSCAPE ARCHITECTURE

LAST REVISION 05-17-10 | DATE PLOTTED => 03-AUG-2010 | TIME PLOTTED => 13:02

Dist	COUNTY	ROUTE	KILOMETER POST TOTAL PROJECT	SHEET No.	TOTAL SHEETS
05	Mon	101	R146.8/159.7	1017	1402

Caltrans Metric

Eric Olson 5-16-10
REGISTERED CIVIL ENGINEER DATE

7-26-10
PLANS APPROVAL DATE

REGISTERED PROFESSIONAL ENGINEER ERIC H. OLSON No. 60801 Exp. 12/31/10 CIVIL STATE OF CALIFORNIA

THE STATE OF CALIFORNIA OR ITS OFFICERS OR AGENTS SHALL NOT BE RESPONSIBLE FOR THE ACCURACY OR COMPLETENESS OF ELECTRONIC COPIES OF THIS PLAN SHEET.

RUMBLE STRIP

LOCATION	STATION FROM	STATION TO	STA
MAIN LINE, NB INSIDE SHLD	"M" 142+60.00	"M" 170+00.00	27.4
MAIN LINE, NB OUTSIDE SHLD	"M" 142+60.00	"M" 156+28.52	13.7
MAIN LINE, NB OUTSIDE SHLD	"M" 157+51.89	"M" 162+33.56	4.8
MAIN LINE, NB OUTSIDE SHLD	"M" 164+21.53	"M" 170+00.00	5.8
MAIN LINE, SB INSIDE SHLD	"M" 142+60.00	"M" 170+00.00	27.4
MAIN LINE, SB OUTSIDE SHLD	"M" 142+60.00	"M" 158+71.93	16.1
MAIN LINE, SB OUTSIDE SHLD	"M" 160+56.84	"M" 163+41.55	2.8
MAIN LINE, SB OUTSIDE SHLD	"M" 164+23.54	"M" 170+00.00	5.8
MAIN LINE, NB INSIDE SHLD	"N" 108+74.00	"N" 111+86.00	3.1
MAIN LINE, SB INSIDE SHLD	"N" 108+74.00	"N" 111+86.00	3.1
MAIN LINE, NB INSIDE SHLD	"O" 122+60.00	"O" 134+85.00	12.3
MAIN LINE, NB OUTSIDE SHLD	"O" 122+60.00	"O" 126+70.00	4.1
MAIN LINE, SB INSIDE SHLD	"O" 122+60.00	"O" 134+85.00	12.3
MAIN LINE, SB OUTSIDE SHLD	"O" 122+60.00	"O" 126+65.00	4.1
MAIN LINE, SB OUTSIDE SHLD	"O" 133+25.00	"O" 134+85.00	1.6
MAIN LINE, NB INSIDE SHLD	"P" 155+60.00	"P" 172+77.74	17.2
MAIN LINE, SB INSIDE SHLD	"P" 155+60.00	"P" 172+77.74	17.2
MAIN LINE, NB INSIDE SHLD	"SN" 184+45.56	"SN" 202+01.85	17.6
MAIN LINE, NB OUTSIDE SHLD	"SN" 184+45.56	"SN" 185+71.76	1.3
MAIN LINE, NB OUTSIDE SHLD	"SN" 186+16.28	"SN" 188+27.58	2.1
MAIN LINE, NB OUTSIDE SHLD	"SN" 188+51.59	"SN" 189+21.00	0.7
MAIN LINE, NB OUTSIDE SHLD	"SN" 190+56.80	"SN" 198+27.89	7.7
MAIN LINE, SB INSIDE SHLD	"SS" 184+45.74	"SS" 201+43.00	17.0
MAIN LINE, SB OUTSIDE SHLD	"SS" 184+45.74	"SS" 188+07.38	3.6
MAIN LINE, SB OUTSIDE SHLD	"SS" 189+91.04	"SS" 198+48.58	8.6
		TOTAL	237.4

SUMMARY OF QUANTITIES

Q-16

STATE OF CALIFORNIA - DEPARTMENT OF TRANSPORTATION
Caltrans 06-DESIGN

FUNCTIONAL SUPERVISOR DAVID FRANKE
CALCULATED-DESIGNED BY DAN MASSA
CHECKED BY RONNIE KIER
REVISED BY
DATE REVISED

LAST REVISION 05-16-10 DATE PLOTTED => 03-AUG-2010 TIME PLOTTED => 13:02

Dist	COUNTY	ROUTE	KILOMETER POST TOTAL PROJECT	SHEET No.	TOTAL SHEETS
05	Mon	101	R146.8/159.7	1018	1402

Eric Olson 5-16-10
REGISTERED CIVIL ENGINEER DATE

7-26-10
PLANS APPROVAL DATE

REGISTERED PROFESSIONAL ENGINEER ERIC H. OLSON No. 60801 Exp. 12/31/10 CIVIL STATE OF CALIFORNIA

THE STATE OF CALIFORNIA OR ITS OFFICERS OR AGENTS SHALL NOT BE RESPONSIBLE FOR THE ACCURACY OR COMPLETENESS OF ELECTRONIC COPIES OF THIS PLAN SHEET.

Caltrans Metric

LEGEND

STANDARD PLAN SHEET No.

DETAIL No.

NOTES:

1. THE CONTRACTOR SHALL VERIFY ALL CONTROLLING DIMENSIONS BEFORE ORDERING OR FABRICATING ANY MATERIAL.
2. GEOCOMPOSITE DRAIN, CEMENT TREATED PERMEABLE MATERIAL, AND 80 mm ø SLOTTED PLASTIC PIPE CONTINUOUS BEHIND RETAINING WALL. CAP ENDS OF PIPE. PROVIDE "TEE" CONNECTION AT EACH 100 mm ø DRAIN. SEE DRAINAGE DETAIL.
3. FOR DETAILS NOT SHOWN SEE STANDARD PLANS.

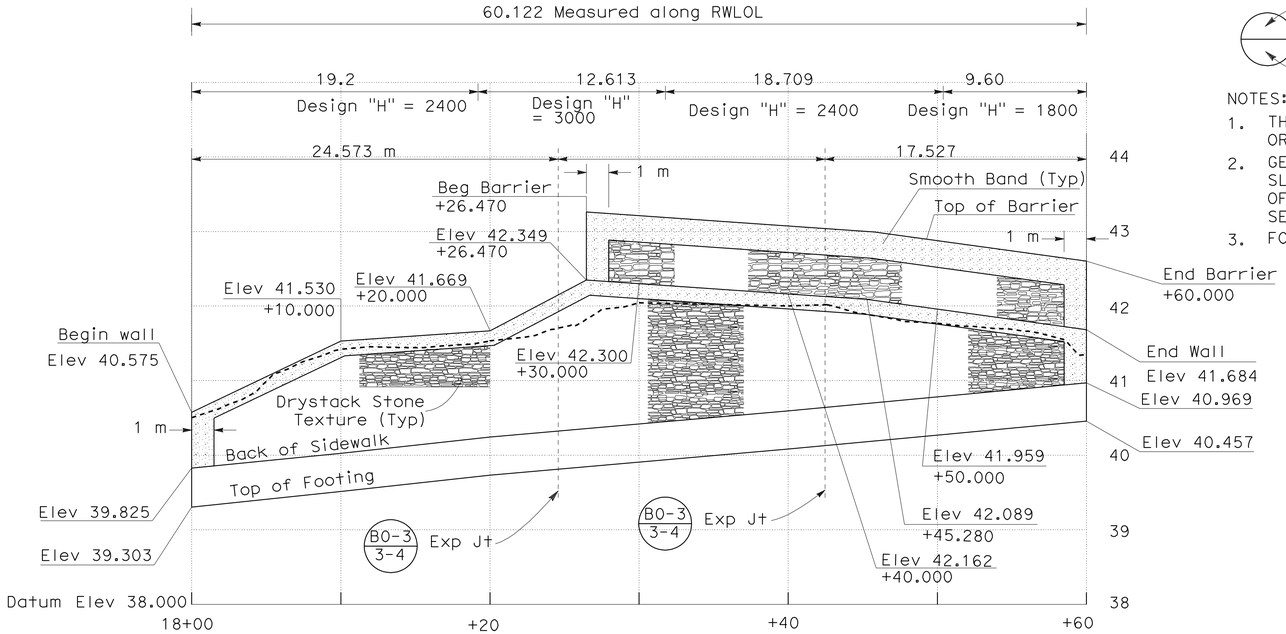

ELEVATION VIEW

SCALE Horiz 1:200

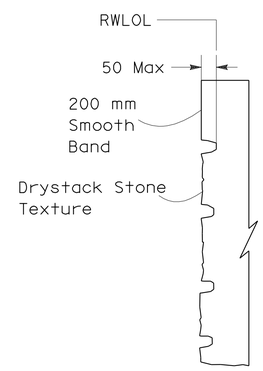

DRYSTACK STONE TEXTURE DETAIL

NO SCALE

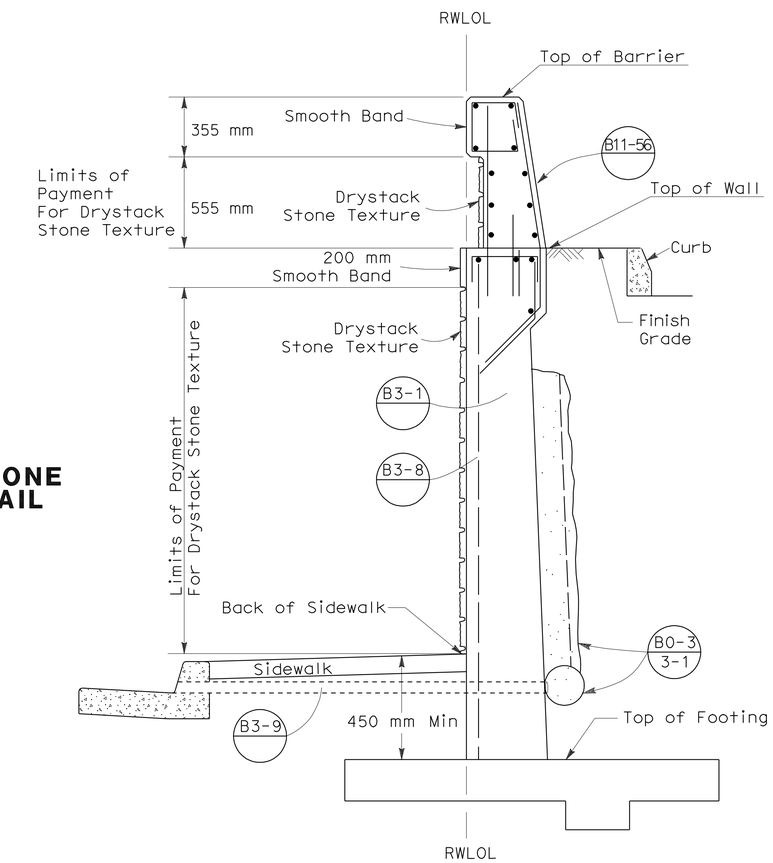

TYPICAL SECTION

NO SCALE

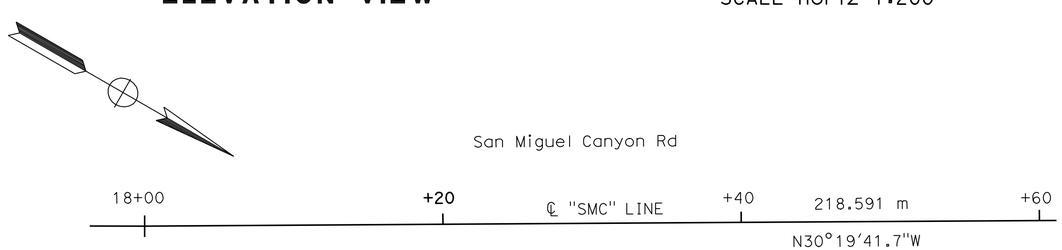

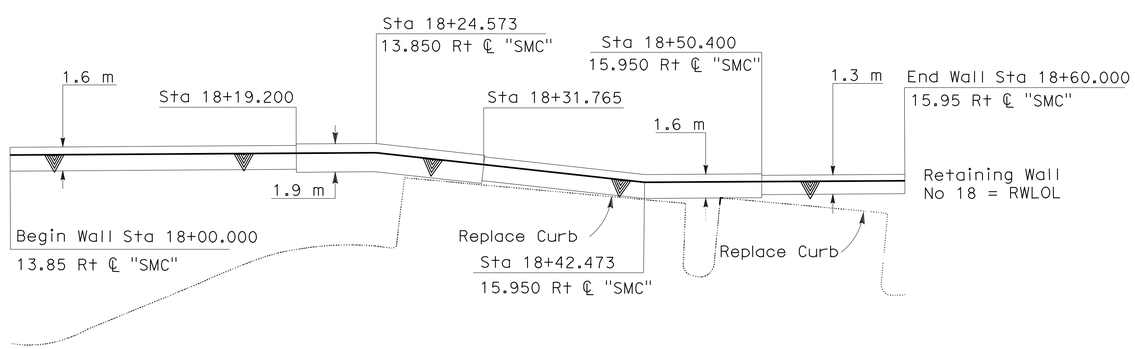

FOUNDATION PLAN

SCALE 1:200

RETAINING WALL No. 18
TYPE 1

ALL DIMENSIONS ARE IN METERS
UNLESS OTHERWISE SHOWN

RETAINING WALL PLAN

SCALE AS SHOWN

R-1

REVISED BY	DATE REVISED

CALCULATED-DESIGNED BY	CHECKED BY
LUIS RIOS	ERIC OLSON

FUNCTIONAL SUPERVISOR: DAVID FRANKE

STATE OF CALIFORNIA - DEPARTMENT OF TRANSPORTATION
06-DESIGN
Caltrans

LAST REVISION 05-05-10 | DATE PLOTTED => 03-AUG-2010 | TIME PLOTTED => 13:02

DIST	COUNTY	ROUTE	KILOMETER POST TOTAL PROJECT	SHEET No	TOTAL SHEETS
05	Mon	101	R146.8/159.7	1019	1402

Michael S. Finegan 10-19-09
REGISTERED CIVIL ENGINEER

7-26-10
PLANS APPROVAL DATE

REGISTERED PROFESSIONAL ENGINEER
Michael S. Finegan
No. C50138
Exp. 6-30-11
CIVIL
STATE OF CALIFORNIA

The State of California or its officers or agents shall not be responsible for the accuracy or completeness of electronic copies of this plan sheet.

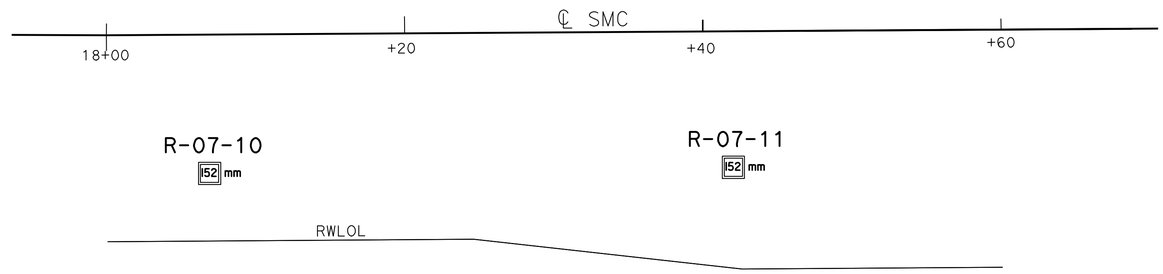

BENCH MARK

MON-101-96.415 Elev 50.948 (NGVD29)

PLAN

1:200

PROFILE

HOR. 1:100
VER. 1:100

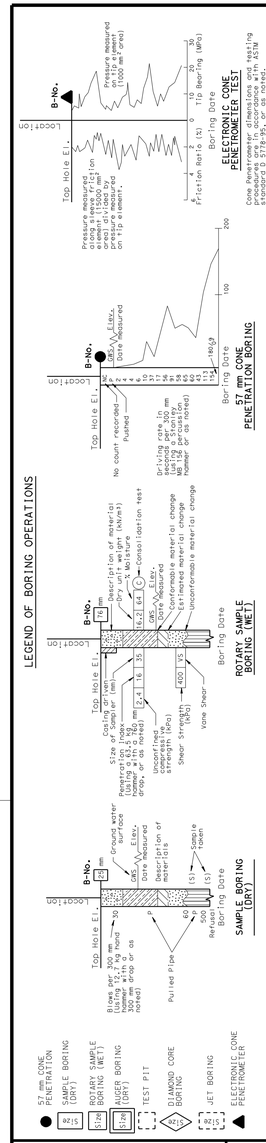

LEGEND OF EARTH MATERIALS

GRAVEL, SAND, SILT, CLAY, SANDY CLAY or CLAYEY SAND, SANDY SILT or SILTY SAND, SILTY CLAY, CLAYEY SILT, PEAT and/or ORGANIC MATTER, COBBLES and/or BOULDERS, IGNEOUS ROCK, SEDIMENTARY ROCK, METAMORPHIC

CONSISTENCY CLASSIFICATION FOR SOILS

According to the Standard Penetration Test

SPT N-Value (Blows/0.3m)	Granular	SPT N-Value (Blows/0.3m)	Cohesive
0-4	Very Loose	<2	Very Soft
5-10	Loose	2-4	Soft
11-30	Medium Dense	5-8	Firm
31-50	Dense	9-15	Stiff
>50	Very Dense	16-30	Very stiff
		>30	Hard

NOTE: Classification of earth material as shown on this sheet is based upon field inspection and is not to be construed to imply mechanical analysis.

OGS CIVIL LOG OF TEST BORINGS SHEET (METRIC) (REV. 4/04)

Caltrans Metric

ENGINEERING SERVICES	GEOTECHNICAL SERVICES
DRAWN BY	W. Tang 12/07
CHECKED BY	W. Hoon

ALL DIMENSIONS ARE IN METERS UNLESS OTHERWISE SHOWN

FIELD INVESTIGATION BY: W. Hoon

ORIGINAL SCALE IN MILLIMETERS FOR REDUCED PLANS 0 10 20 30 40 50 60 70 80 90 100

STATE OF CALIFORNIA
DEPARTMENT OF TRANSPORTATION

DIVISION OF ENGINEERING SERVICES
STRUCTURE DESIGN
DESIGN BRANCH

CU 05
EA 0161E1

BRIDGE NO.
KILOMETER POST PM96.31

RETAINING WALL NO. 18 R-2
LOG OF TEST BORINGS

DISREGARD PRINTS BEARING EARLIER REVISION DATES

REVISION DATES (PRELIMINARY STAGE ONLY) 06-18-09

SHEET OF

FILE => 50161Eqa002.dgn

USERNAME => trrim DATE PLOTTED => 03-AUG-2010 TIME PLOTTED => 13:03

Dist	COUNTY	ROUTE	KILOMETER POST TOTAL PROJECT	SHEET No.	TOTAL SHEETS
05	Mon	101	R146.8/159.7	1020	1402

Eric Olson 5-16-10
REGISTERED CIVIL ENGINEER DATE

7-26-10
PLANS APPROVAL DATE

REGISTERED PROFESSIONAL ENGINEER ERIC H. OLSON No. 60801 Exp. 12/31/10 CIVIL STATE OF CALIFORNIA

THE STATE OF CALIFORNIA OR ITS OFFICERS OR AGENTS SHALL NOT BE RESPONSIBLE FOR THE ACCURACY OR COMPLETENESS OF ELECTRONIC COPIES OF THIS PLAN SHEET.

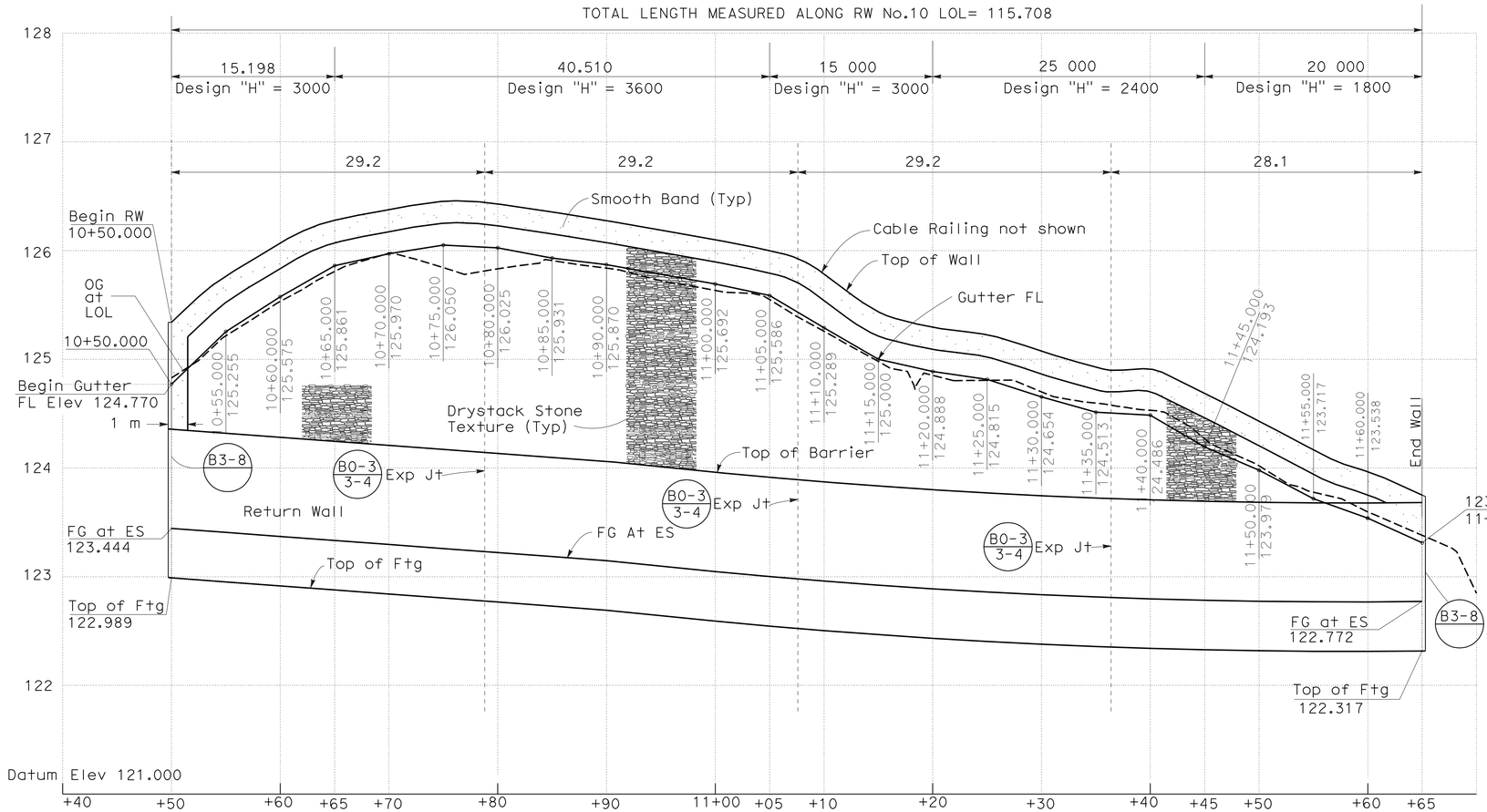

ELEVATION VIEW

SCALE: Horiz 1:250
Vert 1:25

CURVE DATA

No.	R	Δ	T	L
1	499.698	3° 29′41.5"	52.473	104.562
2	507.199		24.889	54.61

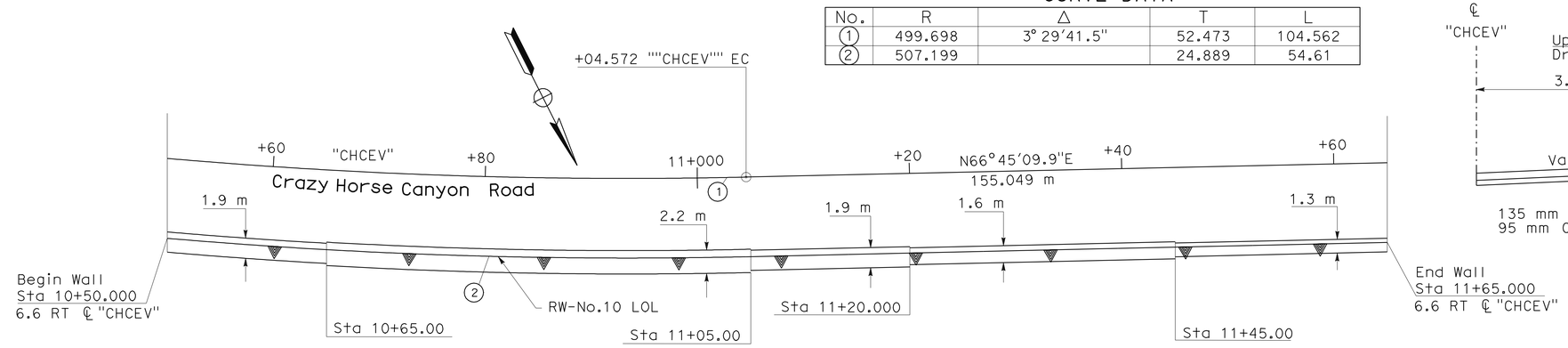

FOUNDATION PLAN

SCALE 1:250

RETAINING WALL No.10
TYPE I

THIS PLAN ACCURATE FOR RETAINING WALL WORK ONLY

Caltrans Metric

LEGEND

STANDARD PLAN SHEET No.

DETAIL No.

NOTES:
1. THE CONTRACTOR SHALL VERIFY ALL CONTROLLING DIMENSIONS BEFORE ORDERING OR FABRICATING ANY MATERIAL.
2. GEOCOMPOSITE DRAIN, CEMENT TREATED PERMEABLE MATERIAL, AND 80 mm ø SLOTTED PLASTIC PIPE CONTINUOUS BEHIND RETAINING WALL. CAP ENDS OF PIPE. PROVIDE "TEE" CONNECTION AT EACH 100 mm ø DRAIN. SEE DRAINAGE DETAIL
3. FOR DETAILS NOT SHOWN SEE STANDARD PLANS.

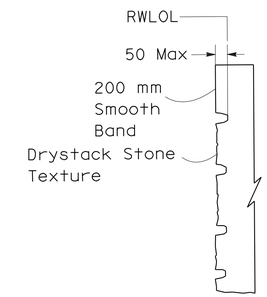

DRYSTACK STONE TEXTURE DETAIL
NO SCALE

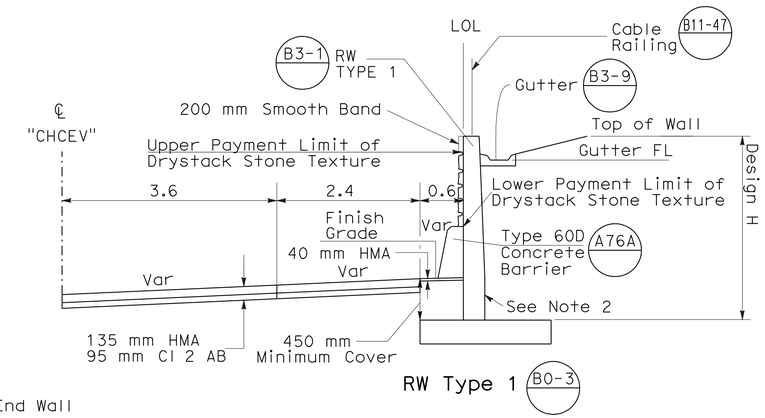

TYPICAL SECTION
NO SCALE

ALL DIMENSIONS ARE IN METERS UNLESS OTHERWISE SHOWN

RETAINING WALL PLAN
SCALE: AS SHOWN

R-3

STATE OF CALIFORNIA - DEPARTMENT OF TRANSPORTATION
Caltrans
06-DESIGN
FUNCTIONAL SUPERVISOR DAVID FRANKE
CALCULATED-DESIGNED BY ERIC OLSON
CHECKED BY LUIS RIOS
REVISED BY 8/09
DATE REVISED

LAST REVISION 05-05-10 DATE PLOTTED => 03-AUG-2010 TIME PLOTTED => 13:03

DIST	COUNTY	ROUTE	KILOMETER POST TOTAL PROJECT	SHEET No	TOTAL SHEETS
05	Mon	101	R146.8/159.7	1021	1402

Michael S. Finegan 10-8-09
REGISTERED CIVIL ENGINEER

7-26-10
PLANS APPROVAL DATE

REGISTERED PROFESSIONAL ENGINEER
Michael S. Finegan
No. C50138
Exp. 6-30-11
CIVIL
STATE OF CALIFORNIA

The State of California or its officers or agents shall not be responsible for the accuracy or completeness of electronic copies of this plan sheet.

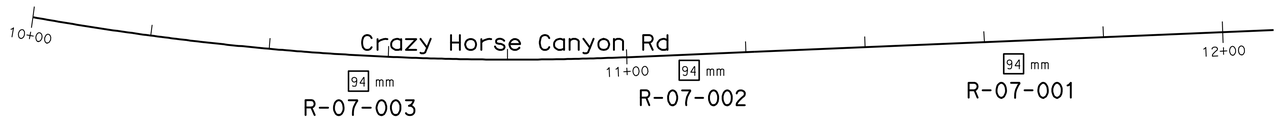

BENCH MARK

MON-101-PM 98.36 Elev 120.490 m
NGVD 29

PLAN

1:500

Note: No ground water encountered during field investigation.

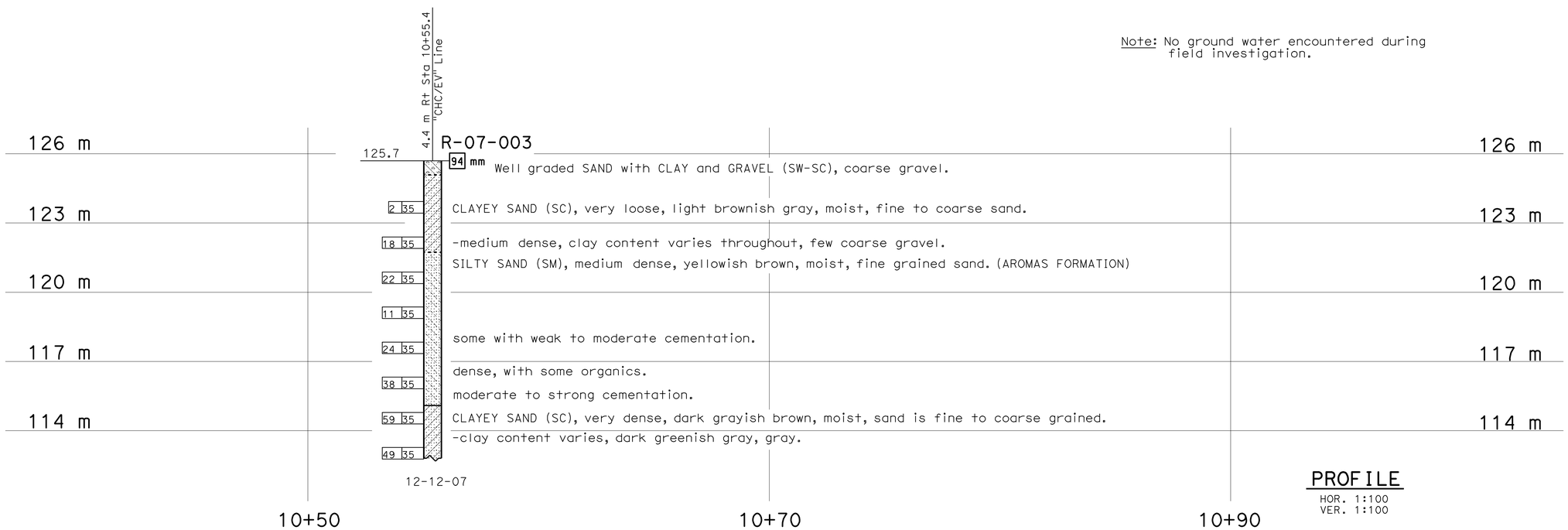

PROFILE

HOR. 1:100
VER. 1:100

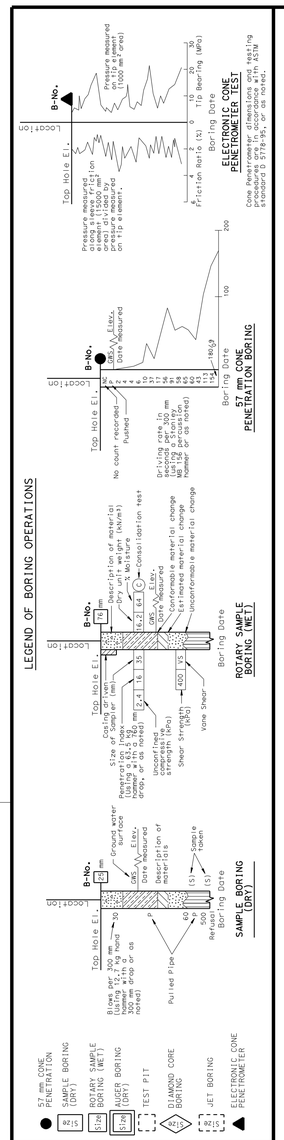

OGS CIVIL LOG OF TEST BORINGS SHEET (METRIC) (REV. 4/04)

Caltrans Metric

ENGINEERING SERVICES	GEOTECHNICAL SERVICES
DRAWN BY	F. Nguyen 3/08
CHECKED BY	W. Hoon

ALL DIMENSIONS ARE IN METERS UNLESS OTHERWISE SHOWN

FIELD INVESTIGATION BY, W. Hoon, Z. Dellamas

STATE OF CALIFORNIA DEPARTMENT OF TRANSPORTATION

DIVISION OF ENGINEERING SERVICES STRUCTURE DESIGN DESIGN BRANCH

CU 05
EA 0161E1

BRIDGE NO.
KILOMETER POST

RETAINING WALL NO. 10 R-4

LOG OF TEST BORINGS 1 OF 2

ORIGINAL SCALE IN MILLIMETERS FOR REDUCED PLANS 0 10 20 30 40 50 60 70 80 90 100

DISREGARD PRINTS BEARING EARLIER REVISION DATES

REVISION DATES (PRELIMINARY STAGE ONLY) 06-16-09 10-08-09

SHEET OF

FILE => 50161Eqb002.dgn

USERNAME => rtrim DATE PLOTTED => 03-AUG-2010 TIME PLOTTED => 13:03

DIST	COUNTY	ROUTE	KILOMETER POST TOTAL PROJECT	SHEET No	TOTAL SHEETS
05	Mon	101	R146.8/159.7	1022	1402

Michael S. Finegan 10-8-09
REGISTERED CIVIL ENGINEER

7-26-10
PLANS APPROVAL DATE

REGISTERED PROFESSIONAL ENGINEER
Michael S. Finegan
No. C50138
Exp. 6-30-11
CIVIL
STATE OF CALIFORNIA

The State of California or its officers or agents shall not be responsible for the accuracy or completeness of electronic copies of this plan sheet.

FOR PLAN VIEW, SEE
"LOG OF TEST BORINGS" 1 OF 2

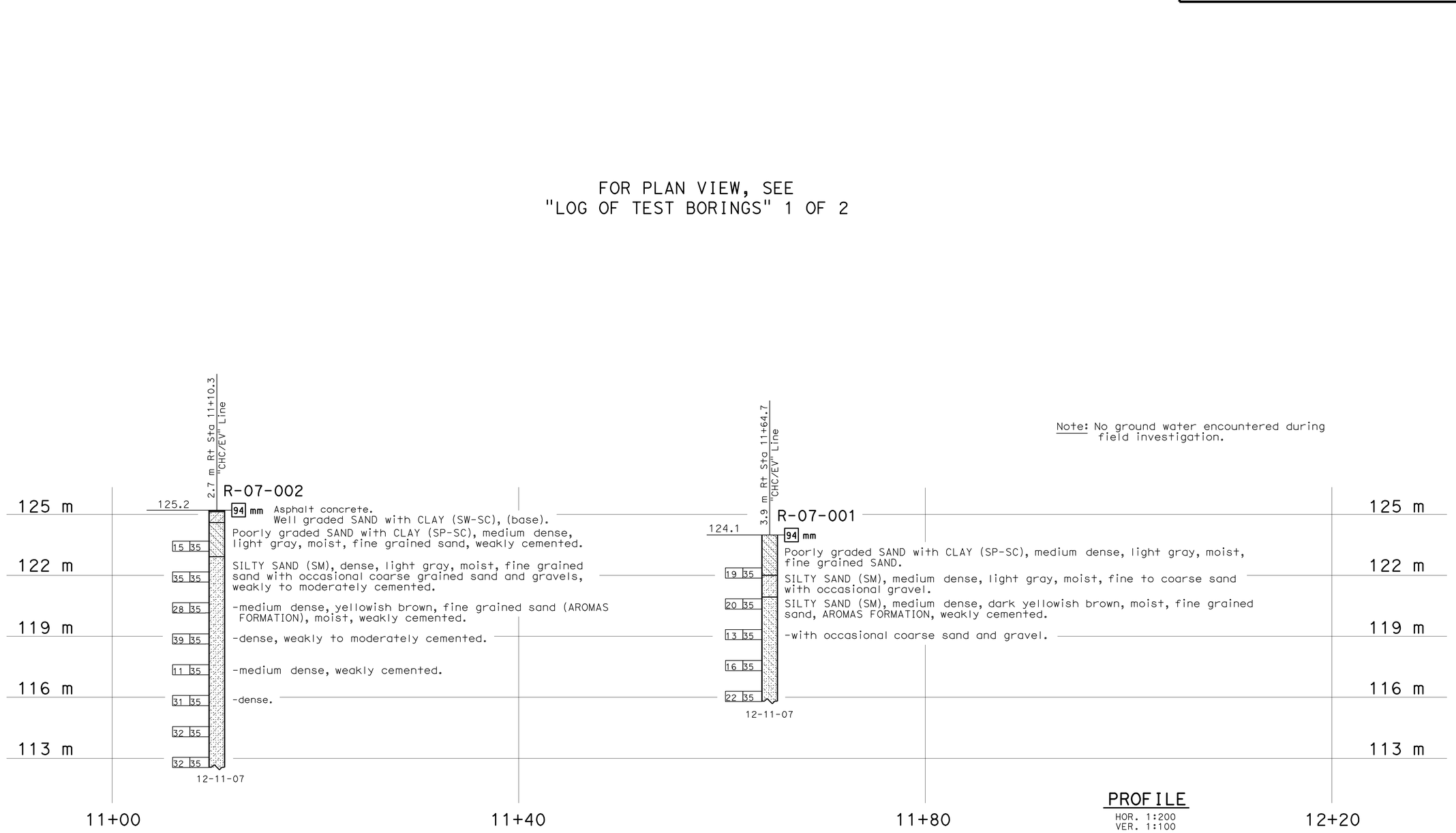

Note: No ground water encountered during field investigation.

PROFILE
HOR. 1:200
VER. 1:100

LEGEND OF BORING OPERATIONS

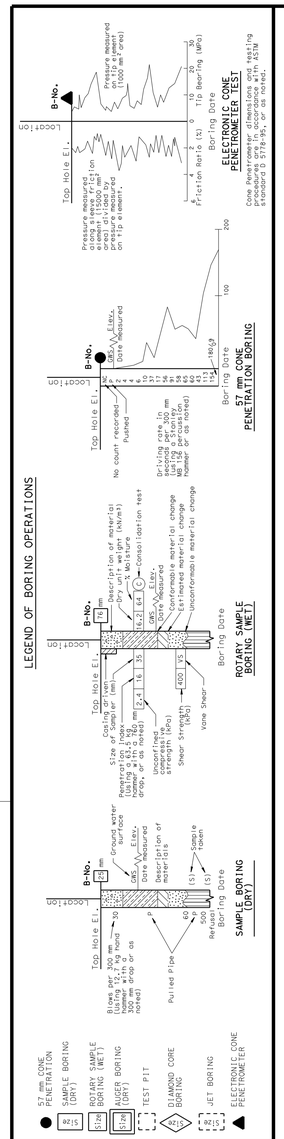

LEGEND OF EARTH MATERIALS

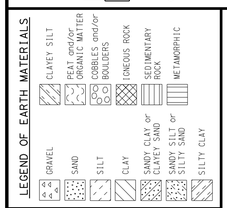

CONSISTENCY CLASSIFICATION FOR SOILS

According to the Standard Penetration Test

SPT N-Value (Blows/0.3m)	Granular	SPT N-Value (Blows/0.3m)	Cohesive
0-4	Very Loose	<2	Very Soft
5-10	Loose	2-4	Soft
11-30	Medium Dense	5-8	Firm
31-50	Dense	9-15	Stiff
>50	Very Dense	16-30	Very stiff
		>30	Hard

NOTE: Classification of earth material as shown on this sheet is based upon field inspection and is not to be construed to imply mechanical analysis.

OGS CIVIL LOG OF TEST BORINGS SHEET (METRIC) (REV. 4/04)

Caltrans Metric

ENGINEERING SERVICES	GEOTECHNICAL SERVICES
DRAWN BY	F. Nguyen 3/08
CHECKED BY	W. Hoon

ALL DIMENSIONS ARE IN METERS UNLESS OTHERWISE SHOWN

FIELD INVESTIGATION BY,
W. Hoon, Z. Dellamas

STATE OF CALIFORNIA
DEPARTMENT OF TRANSPORTATION

DIVISION OF ENGINEERING SERVICES
STRUCTURE DESIGN
DESIGN BRANCH

BRIDGE NO.
KILOMETER POST

RETAINING WALL NO. 10 R-5
LOG OF TEST BORINGS 2 OF 2

ORIGINAL SCALE IN MILLIMETERS FOR REDUCED PLANS 0 10 20 30 40 50 60 70 80 90 100

CU 05
EA 0161E1

DISREGARD PRINTS BEARING EARLIER REVISION DATES
REVISION DATES (PRELIMINARY STAGE ONLY) 06-11-09 10-08-09
SHEET OF

FILE => 50161Eqb003.dgn

USERNAME => trrlim DATE PLOTTED => 03-AUG-2010 TIME PLOTTED => 13:03

NOTES:
1. This Plan Accurate For Soundwall Work Only.
2. See Drainage Layouts and Profiles for System Details.

Dist	COUNTY	ROUTE	KILOMETER POST TOTAL PROJECT	SHEET No.	TOTAL SHEETS
05	Mon	101	R146.8/159.7	1023	1402

REGISTERED CIVIL ENGINEER 5-16-10 DATE

7-26-10
PLANS APPROVAL DATE

REGISTERED PROFESSIONAL ENGINEER DANIEL B. MASSA No. 59095 Exp. 6/30/11 CIVIL STATE OF CALIFORNIA

THE STATE OF CALIFORNIA OR ITS OFFICERS OR AGENTS SHALL NOT BE RESPONSIBLE FOR THE ACCURACY OR COMPLETENESS OF ELECTRONIC COPIES OF THIS PLAN SHEET.

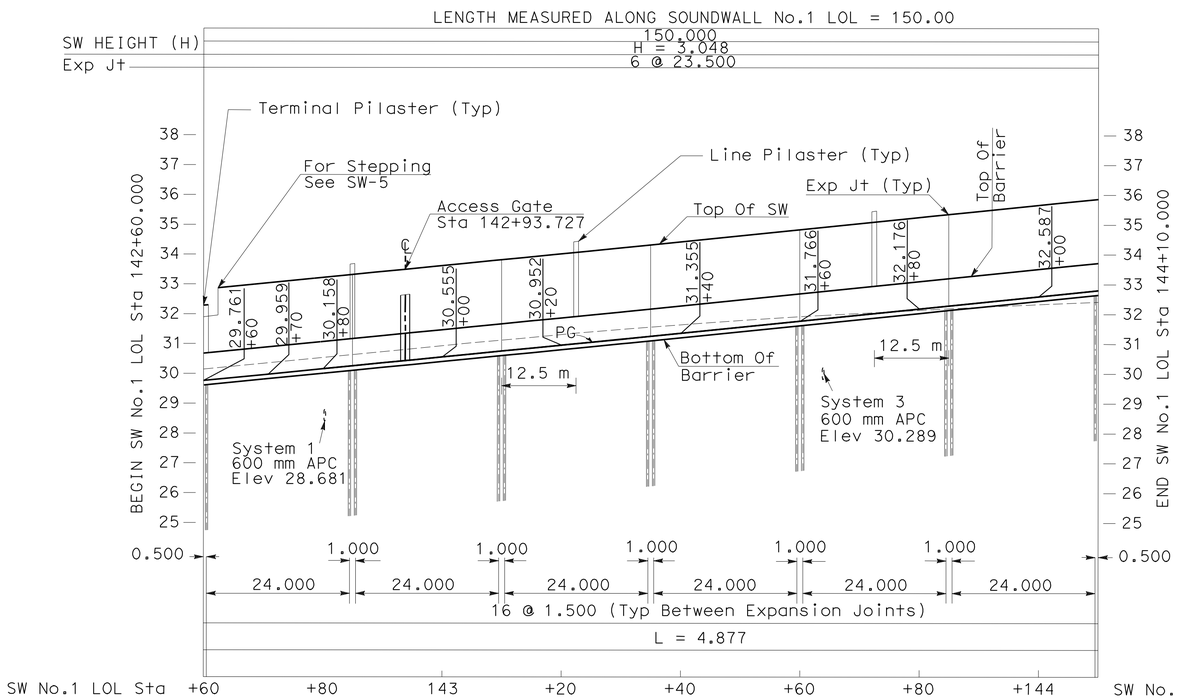

ELEVATION

SCALE: Horiz 1:500
Vert 1:100

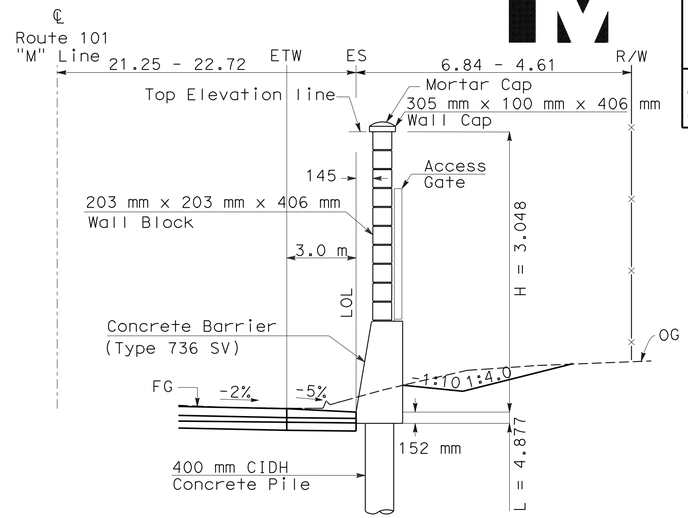

SW No.1 LOL "M" LINE Sta 142+80.000 TO Sta 144+10.000

TYPICAL WALL SECTION

NO SCALE

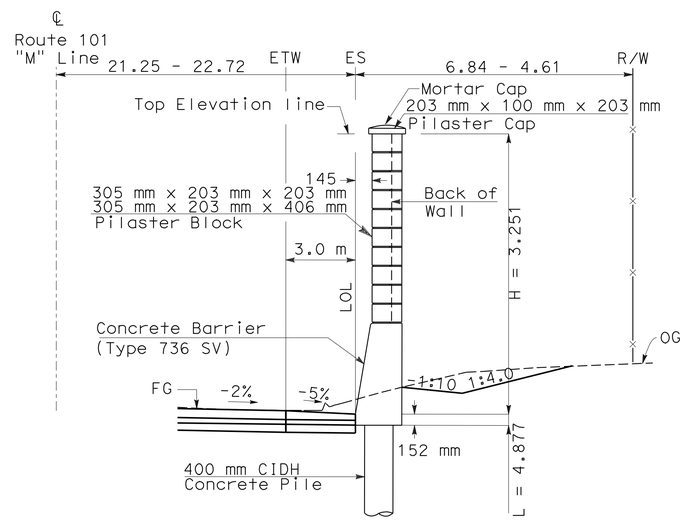

SW No.1 LOL "M" LINE Sta 142+80.000 TO Sta 144+10.000

TYPICAL PILASTER SECTION

NO SCALE

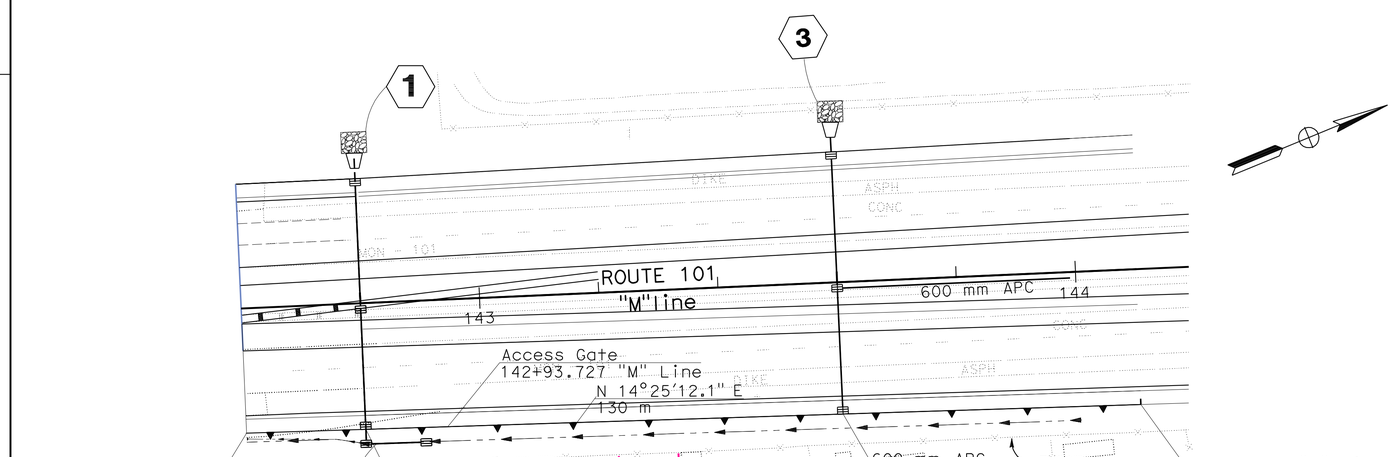

PLAN

SCALE: 1:500

SOUNDWALL No.1

ALL DIMENSIONS ARE IN METERS UNLESS OTHERWISE SHOWN

SOUNDWALL PLAN (SOUNDWALL No. 1)

SW-1

SCALE AS SHOWN

STATE OF CALIFORNIA - DEPARTMENT OF TRANSPORTATION
Caltrans
06-DESIGN

FUNCTIONAL SUPERVISOR: DAVID FRANKE
CALCULATED-DESIGNED BY: ADEL NAJAR
CHECKED BY: DAN MASSA
REVISED BY / DATE REVISED

LAST REVISION 05-15-10
DATE PLOTTED => 03-AUG-2010
TIME PLOTTED => 13:03

Dist	COUNTY	ROUTE	KILOMETER POST TOTAL PROJECT	SHEET No.	TOTAL SHEETS
05	Mon	101	R146.8/159.7	1024	1402

Caltrans Metric

LICENSED LANDSCAPE ARCHITECT

7-26-10
PLANS APPROVAL DATE

LICENSED LANDSCAPE ARCHITECT SCOTT P. DOWLAN No. 4401 Signature 9/30/10 Renewal Date 09/11/10 Date Signed STATE OF CALIFORNIA

THE STATE OF CALIFORNIA OR ITS OFFICERS OR AGENTS SHALL NOT BE RESPONSIBLE FOR THE ACCURACY OR COMPLETENESS OF SCANNED COPIES OF THIS PLAN SHEET.

NOTES:

1. FOR STRUCTURAL DETAILS SEE OTHER SHEETS.
2. ALL EXPOSED FULL BLOCK ENDS AT WALL AND PILASTERS SHALL BE SPLIT FACE BLOCK.
3. ALL EXPOSED WALL CAP ENDS AND PILASTER CAPS SHALL BE SPLIT FACE BLOCK.
4. MORTAR IN BLOCK JOINTS SHALL BE TOOLED CONCAVE.
5. ALL LINE AND TERMINAL PILASTERS SHALL BE CONSTRUCTED PLUMB.
6. INSTALL CORE HOLE (PLANT) AT 2.5 METERS ON CENTER, TYPICAL. SEE STANDARD PLANS.
7. ACCESS GATE STEEL CHANNEL TO BE MOUNTED WITH SPACERS TO ACCOMODATE SPLIT FACE BLOCK.

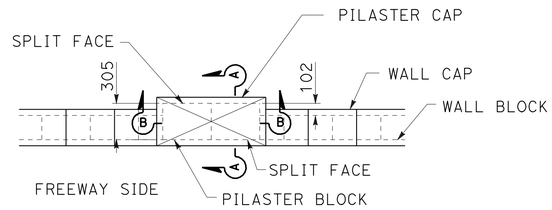

PLAN VIEW
PILASTER

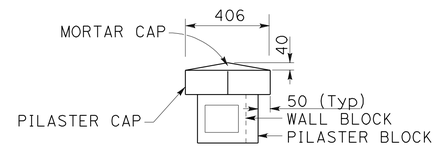

SECTION A-A
PILASTER CAP

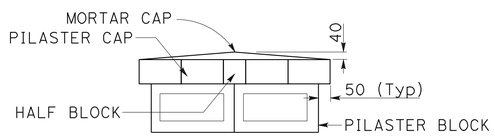

SECTION B-B
PILASTER CAP

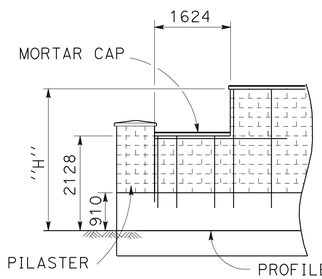

H=3048

SECTION
SINGLE STEP

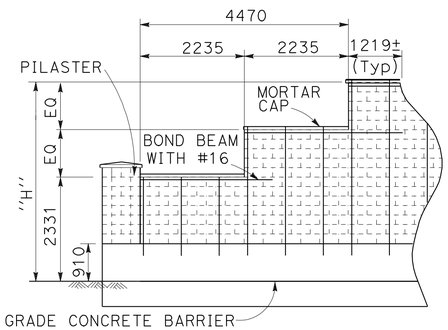

H=4267

SECTION
2 STEPS

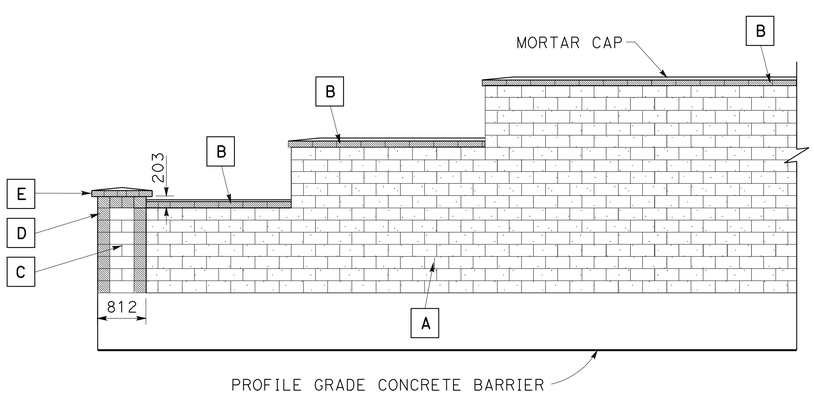

TYPICAL ELEVATION
TERMINAL PILASTER

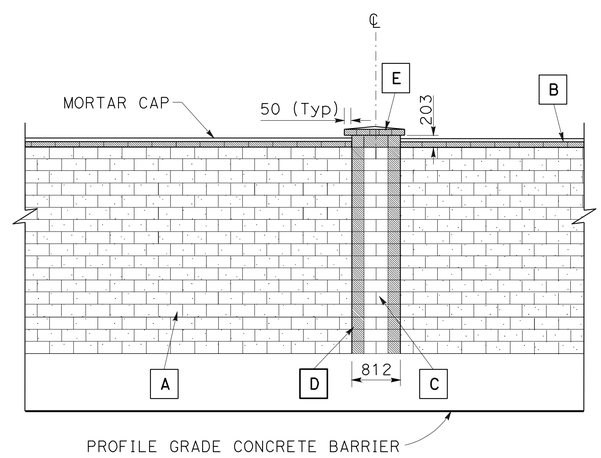

TYPICAL ELEVATION
LINE PILASTER

MASONRY UNIT KEY

A	WALL BLOCK - SPLIT FACE 2 SIDES. EXPOSED WALL ENDS SPLIT FACE, 2 SIDES 1 END. FEDERAL COLOR No. 20095
B	WALL CAP - SPLIT FACE 2 SIDES. EXPOSED CAP ENDS SPLIT FACE, 2 SIDES 1 END. FEDERAL COLOR No. 30340
C	PILASTER BLOCK - SPLIT FACE 2 SIDES. FEDERAL COLOR No. 36440
D	PILASTER BLOCK - SPLIT FACE 2 SIDES. EXPOSED FULL BLOCK ENDS SPLIT FACE, 2 SIDES 1 END. FEDERAL COLOR No. 30340
E	PILASTER CAP - SPLIT FACE 1 SIDE 1 END AND SPLIT FACE 1 END. FEDERAL COLOR No. 30340

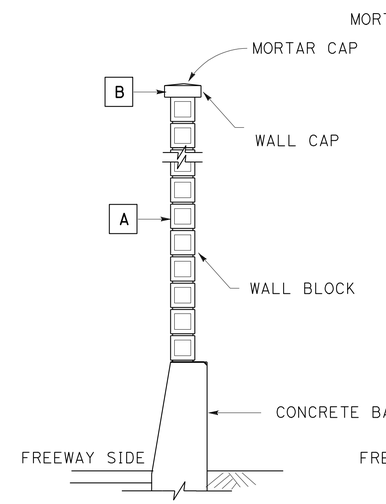

TYPICAL SECTION
WALL

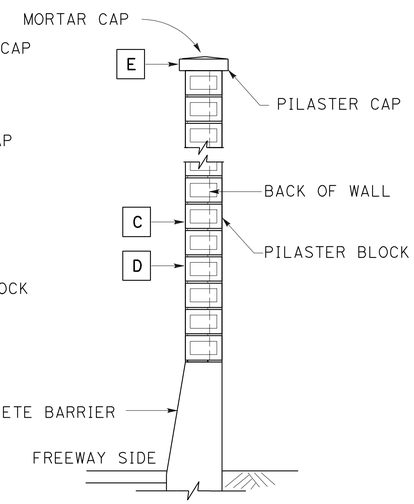

TYPICAL SECTION
PILASTER

ALL DIMENSIONS ARE IN MILLIMETERS UNLESS OTHERWISE SHOWN.

SOUNDWALL AESTHETIC DETAILS

NO SCALE

SW-2

STATE OF CALIFORNIA - DEPARTMENT OF TRANSPORTATION
Caltrans LANDSCAPE ARCHITECTURE

SENIOR LANDSCAPE ARCHITECT: DENNIS REEVES
CALCULATED-DESIGNED BY / CHECKED BY: SCOTT DOWLAN / CORBY KILMER
REVISED BY / DATE REVISED

LAST REVISION 05-17-10 | DATE PLOTTED => 03-AUG-2010 | TIME PLOTTED => 13:04

DIST	COUNTY	ROUTE	KILOMETER POST TOTAL PROJECT	SHEET No	TOTAL SHEETS
05	Mon	101	R146.8/159.7	1025	1402

REGISTERED CIVIL ENGINEER 6-17-09

7-26-10
PLANS APPROVAL DATE

REGISTERED PROFESSIONAL ENGINEER Dan Appelbaum No. C50001 Exp. 06-30-11 CIVIL STATE OF CALIFORNIA

The State of California or its officers or agents shall not be responsible for the accuracy or completeness of electronic copies of this plan sheet.

BENCH MARK

PM 91.42 Elev. 31.715 m (NGVD29)
0.025m IP w/caltrans control pp, in median, 1.0 m W of carsonite post on MBGR post.

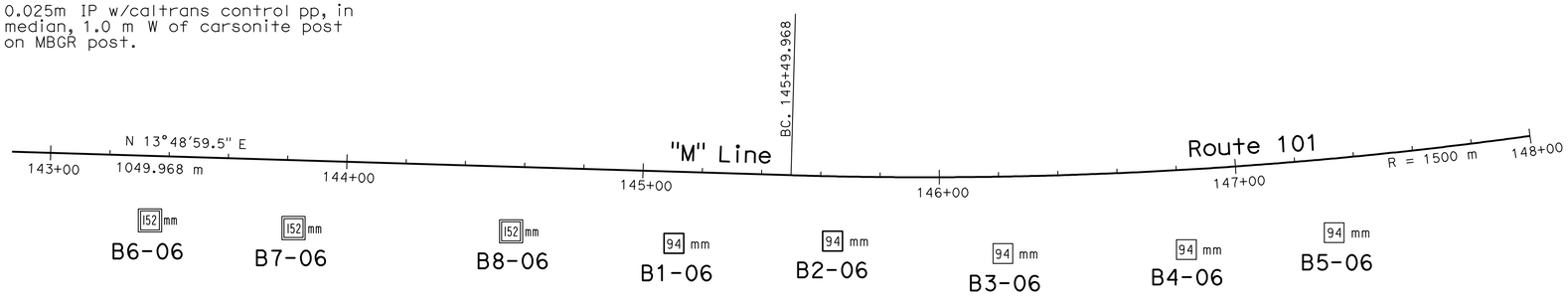

PLAN
1:1000

Notes,

1. 35 mm samples were taken using a standard split barrel sampler with an inside diameter (I.D.) of 35 mm and an outside diameter (O.D.) of 51 mm.
2. A Boart/Longyear automatic hammer was used to advance the sampler using a 63.5 Kg hammer with a 762 mm drop.
3. Borings B1-06 through B5-06 were drilled using a "HX" wireline core barrel with "HQ" drill rod, outside diameter (O.D.) of 89 mm and inside diameter (I.D.) of 78 mm. Borings B6-06 through B8-06 were drilled using 152 mm hollow stem augers.
4. qu=unconfined compressive strength as determined by pocket penetrometer (kPa).
5. tv=undrained shear strength as determined by hand TORVANE (kPa).
6. Groundwater not encountered during subsurface investigation.

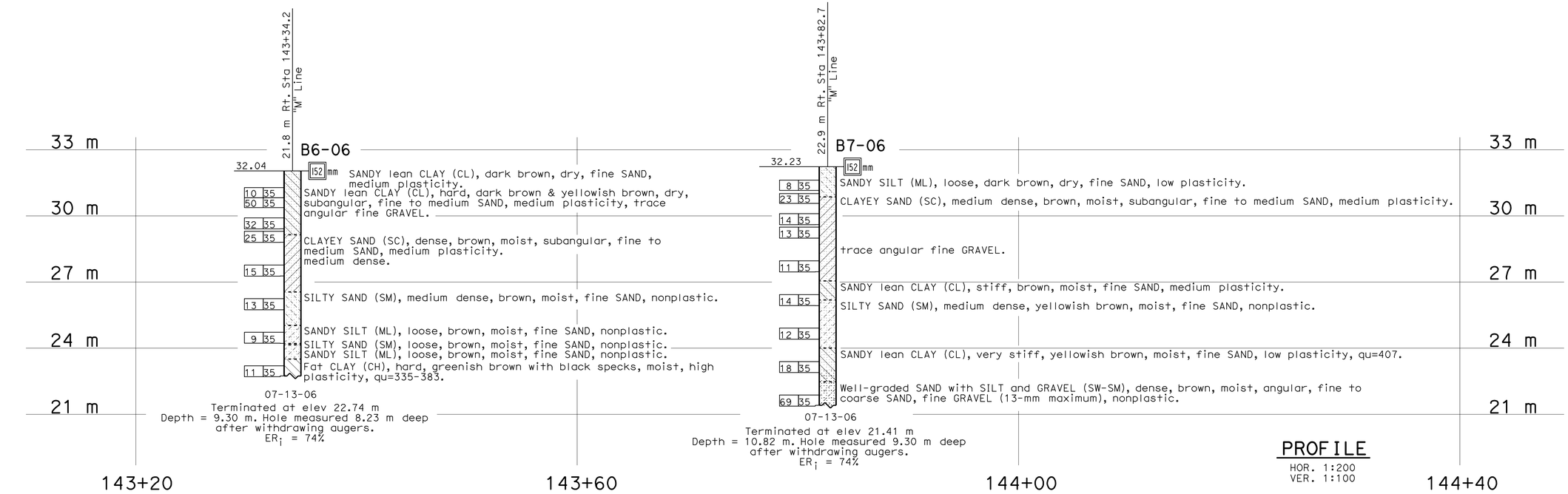

PROFILE
HOR. 1:200
VER. 1:100

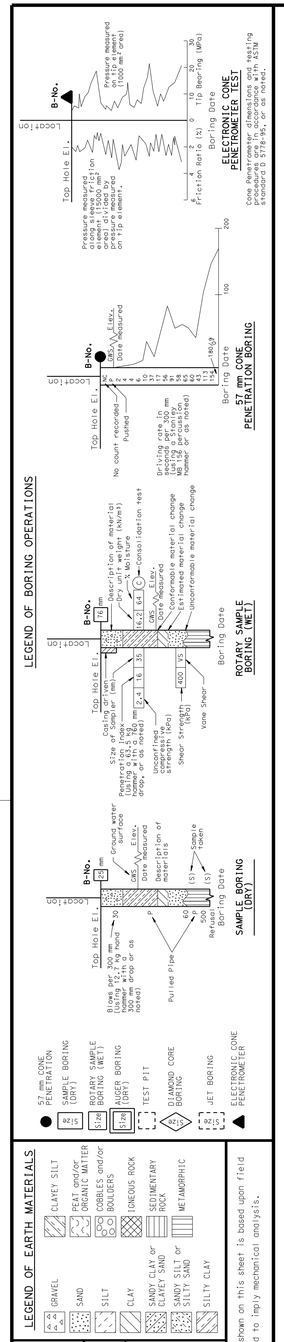

CONSISTENCY CLASSIFICATION FOR SOILS

According to the Standard Penetration Test

SPT N-Value (Blows/ 0.3m)	Granular	SPT N-Value (Blows/ 0.3m)	Cohesive
0-4	Very Loose	<2	Very Soft
5-10	Loose	2-4	Soft
11-30	Medium Dense	5-8	Firm
31-50	Dense	9-15	Stiff
>50	Very Dense	16-30	Very stiff
		>30	Hard

NOTE, Classification of earth material as shown on this sheet is based upon field inspection and is not to be construed to imply mechanical analysis.

OGS CIVIL LOG OF TEST BORINGS SHEET (METRIC) (REV. 4/04)

Caltrans Metric

ENGINEERING SERVICES	GEOTECHNICAL SERVICES
DRAWN BY	F. Nguyen 1/08
CHECKED BY	D. Appelbaum

ALL DIMENSIONS ARE IN METERS UNLESS OTHERWISE SHOWN

FIELD INVESTIGATION BY, D. Appelbaum

ORIGINAL SCALE IN MILLIMETERS FOR REDUCED PLANS 0 10 20 30 40 50 60 70 80 90 100

STATE OF CALIFORNIA DEPARTMENT OF TRANSPORTATION

DIVISION OF ENGINEERING SERVICES STRUCTURE DESIGN
DESIGN BRANCH

CU 05
EA 0161E1

BRIDGE NO.
KILOMETER POST R146.77/161.58

DISREGARD PRINTS BEARING EARLIER REVISION DATES

REVISION DATES (PRELIMINARY STAGE ONLY) 03-14-08 06-04-09 06-17-09

SHEET OF

SOUND WALL NO. 1/ RETAINING WALL NO. 144 SW-3

LOG OF TEST BORINGS 1 OF 4

FILE => 50161Era003.dgn

USERNAME => trrlim DATE PLOTTED => 03-AUG-2010 TIME PLOTTED => 13:04

DIST	COUNTY	ROUTE	KILOMETER POST TOTAL PROJECT	SHEET No	TOTAL SHEETS
05	Mon	101	R146.8/159.7	1026	1402

REGISTERED CIVIL ENGINEER 6-17-09

7-26-10
PLANS APPROVAL DATE

REGISTERED PROFESSIONAL ENGINEER
Dan Appelbaum
No. C50001
Exp. 06-30-11
CIVIL
STATE OF CALIFORNIA

The State of California or its officers or agents shall not be responsible for the accuracy or completeness of electronic copies of this plan sheet.

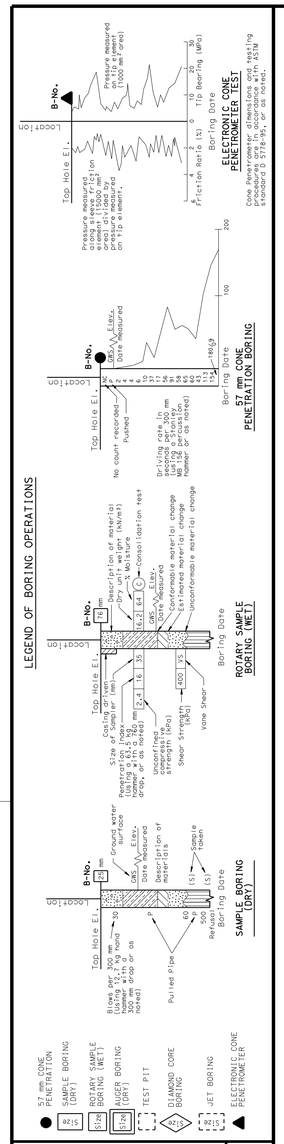

OGS CIVIL LOG OF TEST BORINGS SHEET (METRIC) (REV. 4/04)

FOR PLAN VIEW, SEE
"LOG OF TEST BORINGS" 1 OF 4

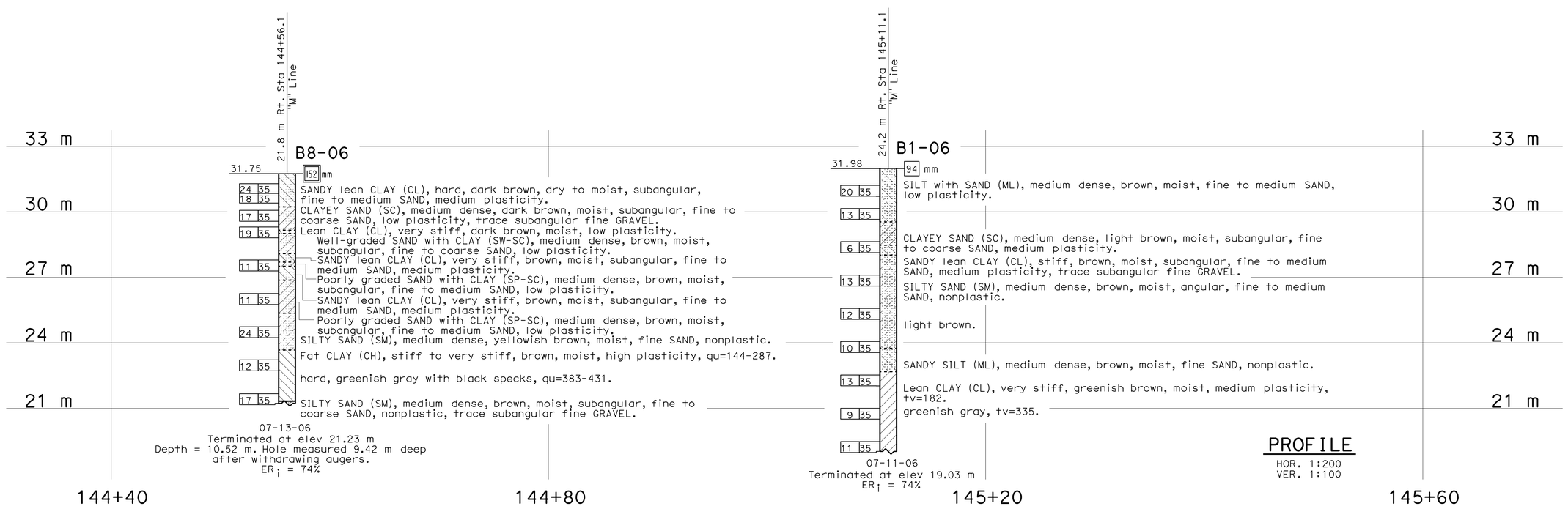

Caltrans Metric

ENGINEERING SERVICES	GEOTECHNICAL SERVICES
DRAWN BY	F. Nguyen 1/08
CHECKED BY	D. Appelbaum

FIELD INVESTIGATION BY, D. Appelbaum

STATE OF CALIFORNIA
DEPARTMENT OF TRANSPORTATION

DIVISION OF ENGINEERING SERVICES
STRUCTURE DESIGN
DESIGN BRANCH

BRIDGE NO.
KILOMETER POST R146.77/161.58

SOUND WALL NO. 1/ RETAINING WALL NO. 144 SW-4

LOG OF TEST BORINGS 2 OF 4

ALL DIMENSIONS ARE IN METERS UNLESS OTHERWISE SHOWN

ORIGINAL SCALE IN MILLIMETERS FOR REDUCED PLANS 0 10 20 30 40 50 60 70 80 90 100

CU 05
EA 0161E1

DISREGARD PRINTS BEARING EARLIER REVISION DATES

REVISION DATES (PRELIMINARY STAGE ONLY) 03-14-08 06-04-09 06-17-09

SHEET OF

FILE => 50161Era004.dgn

USERNAME => trrlim DATE PLOTTED => 03-AUG-2010 TIME PLOTTED => 13:04

DIST	COUNTY	ROUTE	KILOMETER POST TOTAL PROJECT	SHEET No	TOTAL SHEETS
05	Mon	101	R146.8/159.7	1027	1402

REGISTERED CIVIL ENGINEER 6-17-09

7-26-10
PLANS APPROVAL DATE

REGISTERED PROFESSIONAL ENGINEER
Dan Appelbaum
No. C50001
Exp. 06-30-10
CIVIL
STATE OF CALIFORNIA

The State of California or its officers or agents shall not be responsible for the accuracy or completeness of electronic copies of this plan sheet.

LEGEND OF BORING OPERATIONS

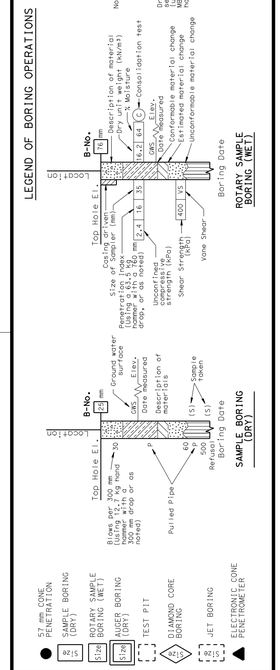

LEGEND OF EARTH MATERIALS

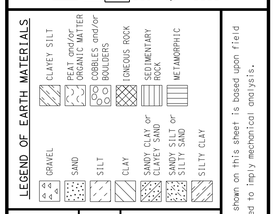

CONSISTENCY CLASSIFICATION FOR SOILS

According to the Standard Penetration Test

SPT N-Value (Blows/0.3m)	Granular	SPT N-Value (Blows/0.3m)	Cohesive
<2	Very Loose	<2	Very Soft
0-4	Loose	2-4	Soft
5-10	Medium Dense	5-8	Firm
11-30	Dense	9-15	Stiff
31-50	Very Dense	16-30	Very stiff
>50		>30	Hard

NOTE, Classification of earth material as shown on this sheet is based upon field inspection and is not to be construed to imply mechanical analysis.

FOR PLAN VIEW, SEE
"LOG OF TEST BORINGS" 1 OF 4

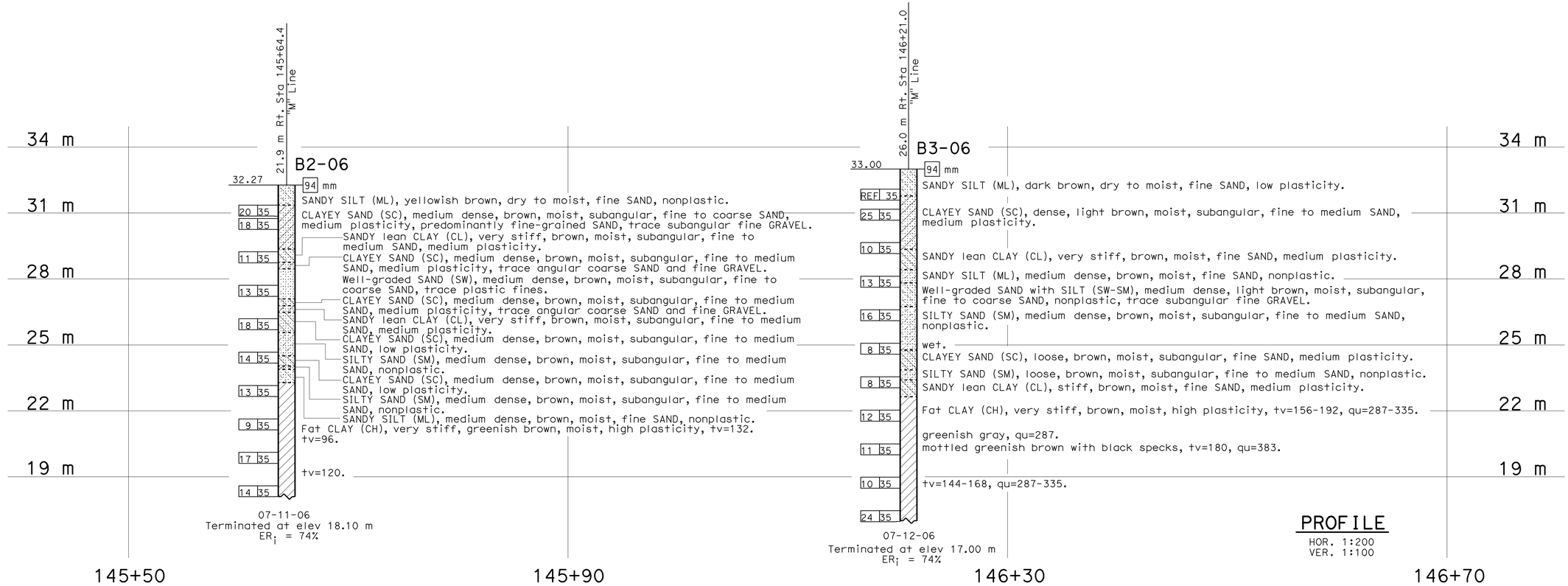

PROFILE
HOR. 1:200
VER. 1:100

Caltrans Metric

ENGINEERING SERVICES	GEOTECHNICAL SERVICES
DRAWN BY	F. Nguyen 1/08
CHECKED BY	D. Appelbaum

FIELD INVESTIGATION BY, D. Appelbaum

STATE OF CALIFORNIA
DEPARTMENT OF TRANSPORTATION

DIVISION OF ENGINEERING SERVICES
STRUCTURE DESIGN
DESIGN BRANCH

BRIDGE NO.
KILOMETER POST R146.77/161.58

SOUND WALL NO. 1/ RETAINING WALL NO. 144 SW-5

LOG OF TEST BORINGS 3 OF 4

ALL DIMENSIONS ARE IN METERS UNLESS OTHERWISE SHOWN

ORIGINAL SCALE IN MILLIMETERS FOR REDUCED PLANS 0 10 20 30 40 50 60 70 80 90 100

CU 05
EA 0161E1

DISREGARD PRINTS BEARING EARLIER REVISION DATES

REVISION DATES (PRELIMINARY STAGE ONLY) 03-14-08 06-04-09 06-17-09

SHEET OF

OGS CIVIL LOG OF TEST BORINGS SHEET (METRIC) (REV. 4/04)

FILE => 50161Era005.dgn

USERNAME => trilim DATE PLOTTED => 03-AUG-2010 TIME PLOTTED => 13:04

DIST	COUNTY	ROUTE	KILOMETER POST TOTAL PROJECT	SHEET No	TOTAL SHEETS
05	Mon	101	R146.8/159.7	1028	1402

REGISTERED CIVIL ENGINEER 6-17-09

7-26-10
PLANS APPROVAL DATE

REGISTERED PROFESSIONAL ENGINEER
Dan Appelbaum
No. C50001
Exp. 06-30-11
CIVIL
STATE OF CALIFORNIA

The State of California or its officers or agents shall not be responsible for the accuracy or completeness of electronic copies of this plan sheet.

LEGEND OF BORING OPERATIONS

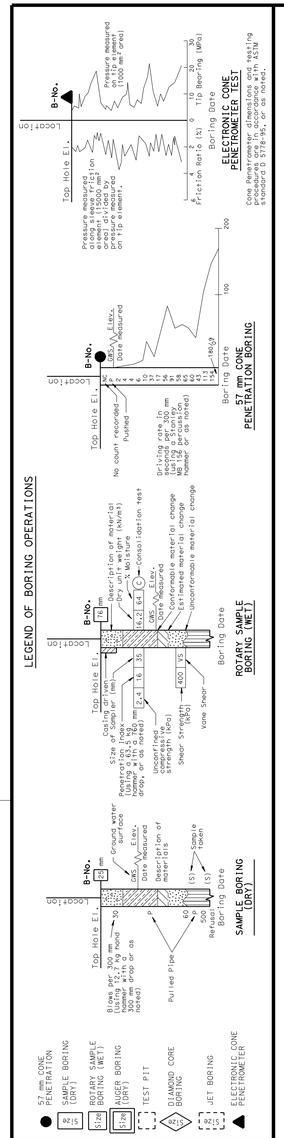

LEGEND OF EARTH MATERIALS

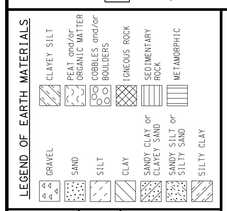

CONSISTENCY CLASSIFICATION FOR SOILS

According to the Standard Penetration Test

SPT N-Value (Blows/ 0.3m)	Granular	SPT N-Value (Blows/ 0.3m)	Cohesive
0-4	Very Loose	<2	Very Soft
5-10	Loose	2-4	Soft
11-30	Medium Dense	5-8	Firm
31-50	Dense	9-15	Stiff
>50	Very Dense	16-30	Very stiff
		>30	Hard

NOTE, Classification of earth material as shown on this sheet is based upon field inspection and is not to be construed to imply mechanical analysis.

FOR PLAN VIEW, SEE
"LOG OF TEST BORINGS" 1 OF 4

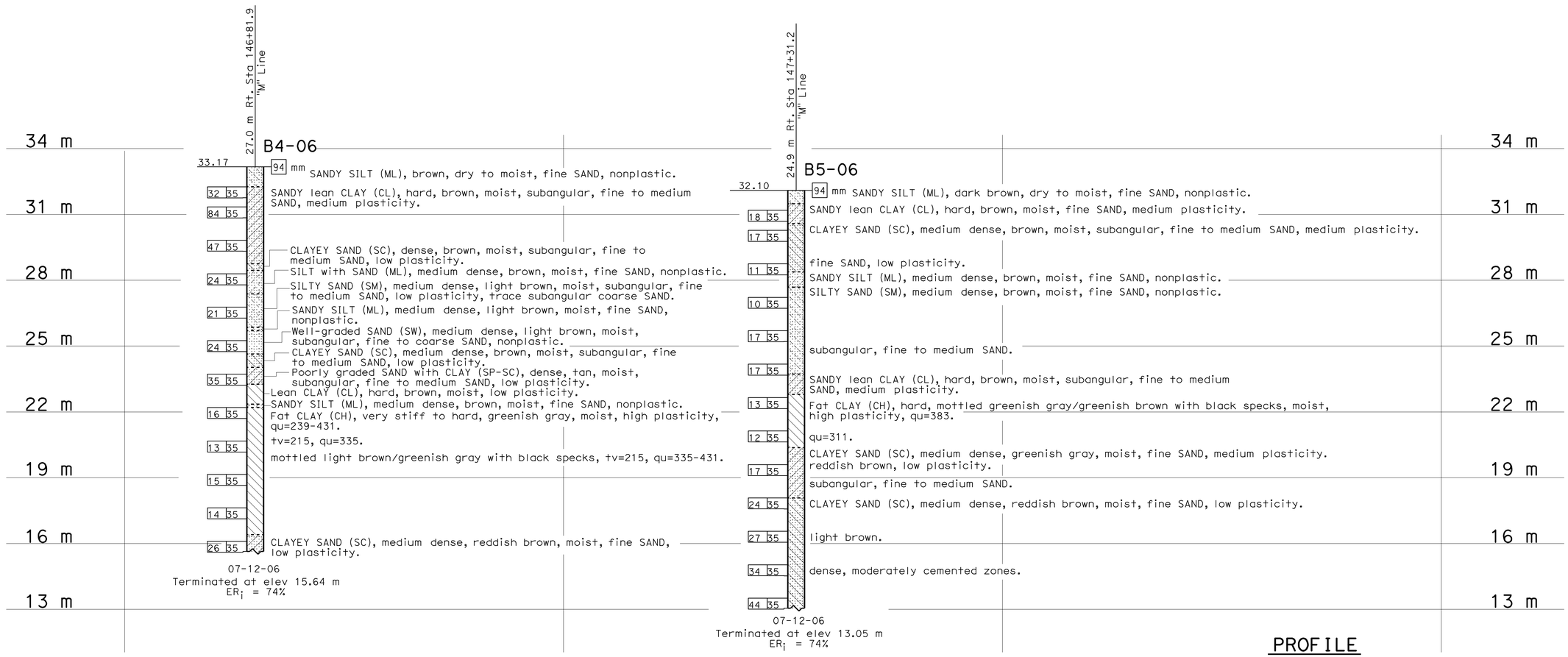

PROFILE
HOR. 1:200
VER. 1:100

Caltrans Metric	ENGINEERING SERVICES	GEOTECHNICAL SERVICES	FIELD INVESTIGATION BY,	STATE OF CALIFORNIA DEPARTMENT OF TRANSPORTATION	DIVISION OF ENGINEERING SERVICES STRUCTURE DESIGN	BRIDGE NO.	SOUND WALL NO. 1/ RETAINING WALL NO. 144 SW-6
	DRAWN BY	F. Nguyen 1/08	D. Appelbaum		DESIGN BRANCH	KILOMETER POST R146.77/161.58	LOG OF TEST BORINGS 4 OF 4
	CHECKED BY	D. Appelbaum					

ALL DIMENSIONS ARE IN METERS UNLESS OTHERWISE SHOWN

ORIGINAL SCALE IN MILLIMETERS FOR REDUCED PLANS 0 10 20 30 40 50 60 70 80 90 100

CU 05
EA 0161E1

DISREGARD PRINTS BEARING EARLIER REVISION DATES

REVISION DATES (PRELIMINARY STAGE ONLY) 03-14-08 06-04-09 06-17-09

SHEET OF

OGS CIVIL LOG OF TEST BORINGS SHEET (METRIC) (REV. 4/04)

FILE => 50161Era006.dgn

USERNAME => trrlim DATE PLOTTED => 03-AUG-2010 TIME PLOTTED => 13:05

NOTES:
1. This Plan Is Accurate For Soundwall Work Only.
2. See Drainage Layouts and Profiles for System Details.

Dist	COUNTY	ROUTE	KILOMETER POST TOTAL PROJECT	SHEET No.	TOTAL SHEETS
05	Mon	101	R146.8/159.7	1029	1402

REGISTERED CIVIL ENGINEER — 5-16-10 DATE

7-26-10
PLANS APPROVAL DATE

REGISTERED PROFESSIONAL ENGINEER DANIEL B. MASSA No. 59095 Exp. 6/30/11 CIVIL STATE OF CALIFORNIA

THE STATE OF CALIFORNIA OR ITS OFFICERS OR AGENTS SHALL NOT BE RESPONSIBLE FOR THE ACCURACY OR COMPLETENESS OF ELECTRONIC COPIES OF THIS PLAN SHEET.

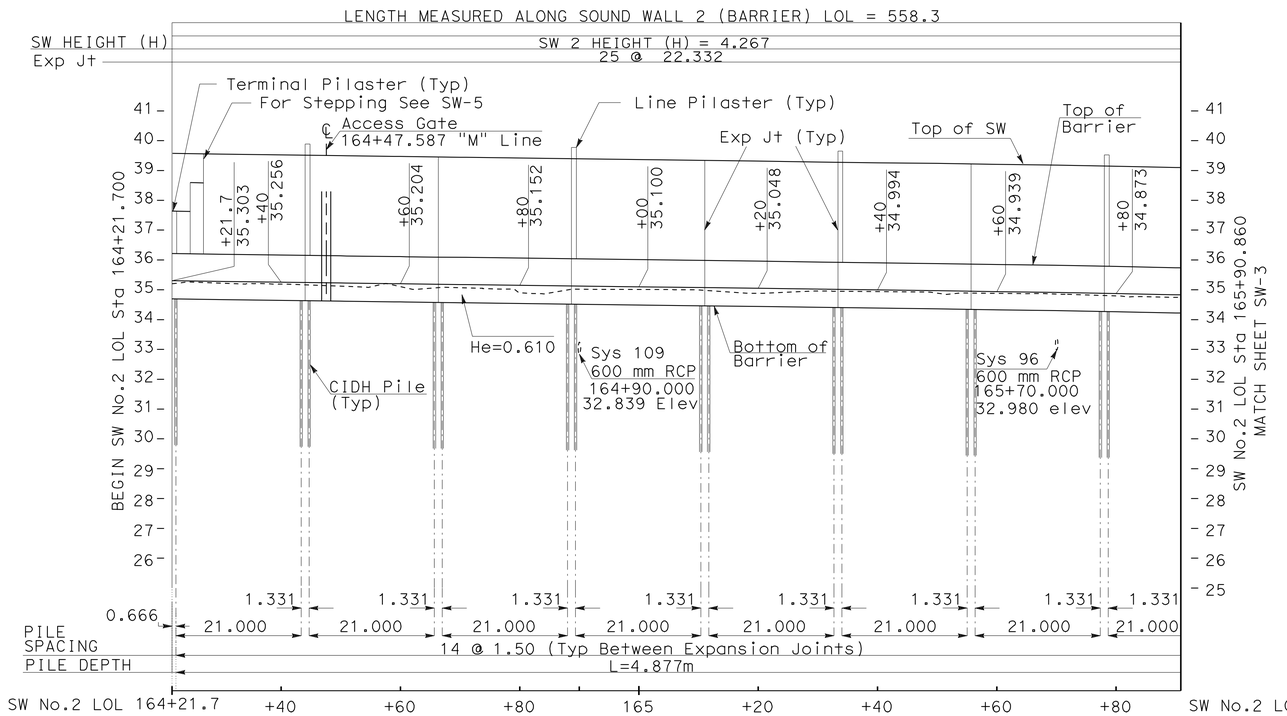

ELEVATION

SCALE: Horiz 1:500
Vert 1:100

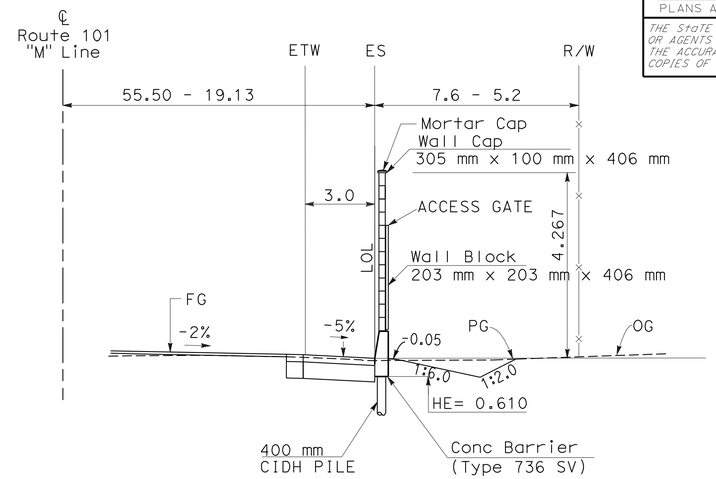

SW 2 LOL "M" Line Sta 164+21.700 to Sta 169+80.000

TYPICAL WALL SECTION

NO SCALE

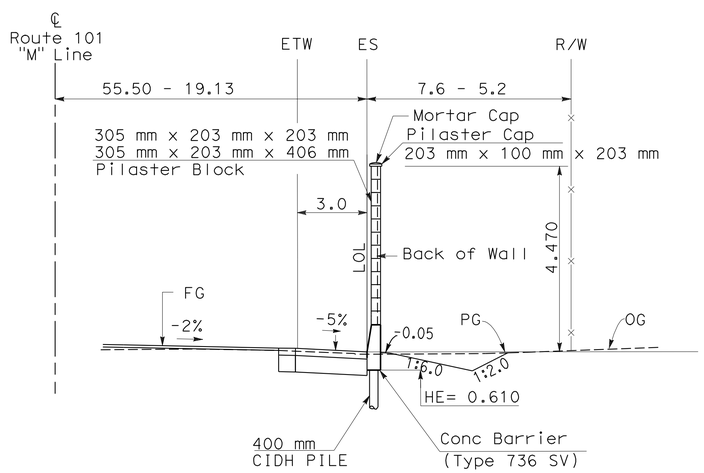

SW 2 LOL "M" Line Sta 164+21.700 TO Sta 169+80.000

TYPICAL PILASTER SECTION

NO SCALE

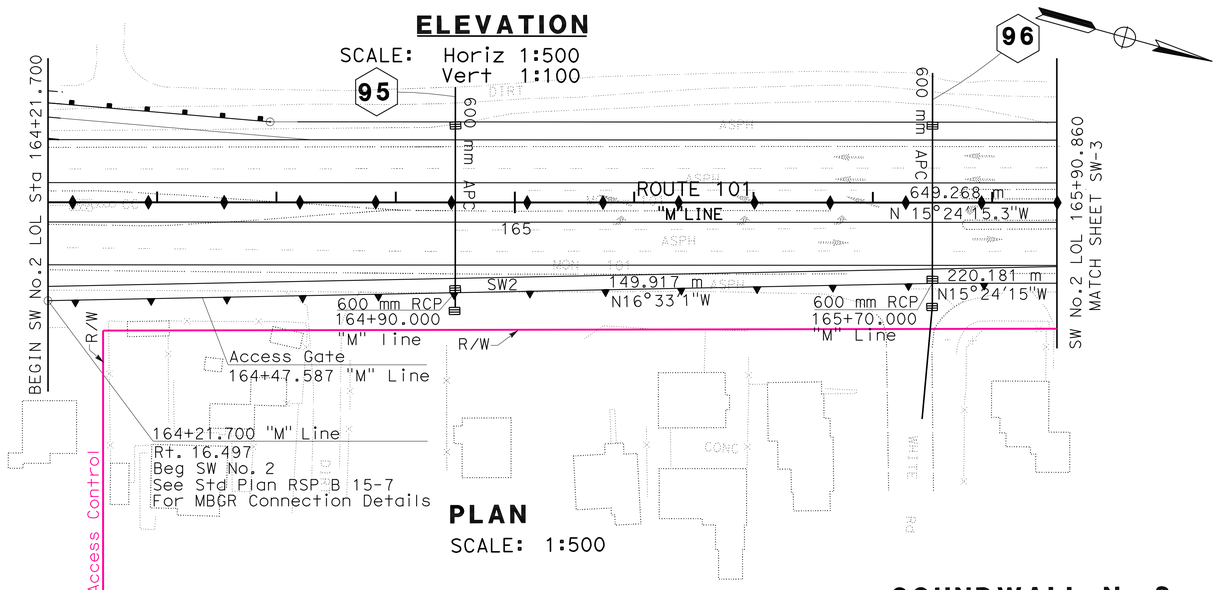

PLAN

SCALE: 1:500

SOUNDWALL No.2

ALL DIMENSIONS ARE IN METERS UNLESS OTHERWISE SHOWN

SOUNDWALL PLAN
(SOUNDWALL No. 2)

SW-7

SCALE AS SHOWN

REVISED BY | DATE REVISED
ADEL NAJAR | DAN MASSA
CALCULATED-DESIGNED BY | CHECKED BY
FUNCTIONAL SUPERVISOR: DAVID FRANKE
STATE OF CALIFORNIA - DEPARTMENT OF TRANSPORTATION
Caltrans 06-DESIGN

LAST REVISION 05-15-10 | DATE PLOTTED => 03-AUG-2010 | TIME PLOTTED => 13:05

NOTES:

1. This Plan Is Accurate For Soundwall Work Only.
2. See Drainage Layouts and Profiles for System Details.

Dist	COUNTY	ROUTE	KILOMETER POST TOTAL PROJECT	SHEET No.	TOTAL SHEETS
05	Mon	101	R146.8/159.7	1030	1402

REGISTERED CIVIL ENGINEER 5-16-10 DATE

7-26-10
PLANS APPROVAL DATE

REGISTERED PROFESSIONAL ENGINEER DANIEL B. MASSA No. 59095 Exp. 6/30/11 CIVIL STATE OF CALIFORNIA

THE STATE OF CALIFORNIA OR ITS OFFICERS OR AGENTS SHALL NOT BE RESPONSIBLE FOR THE ACCURACY OR COMPLETENESS OF ELECTRONIC COPIES OF THIS PLAN SHEET.

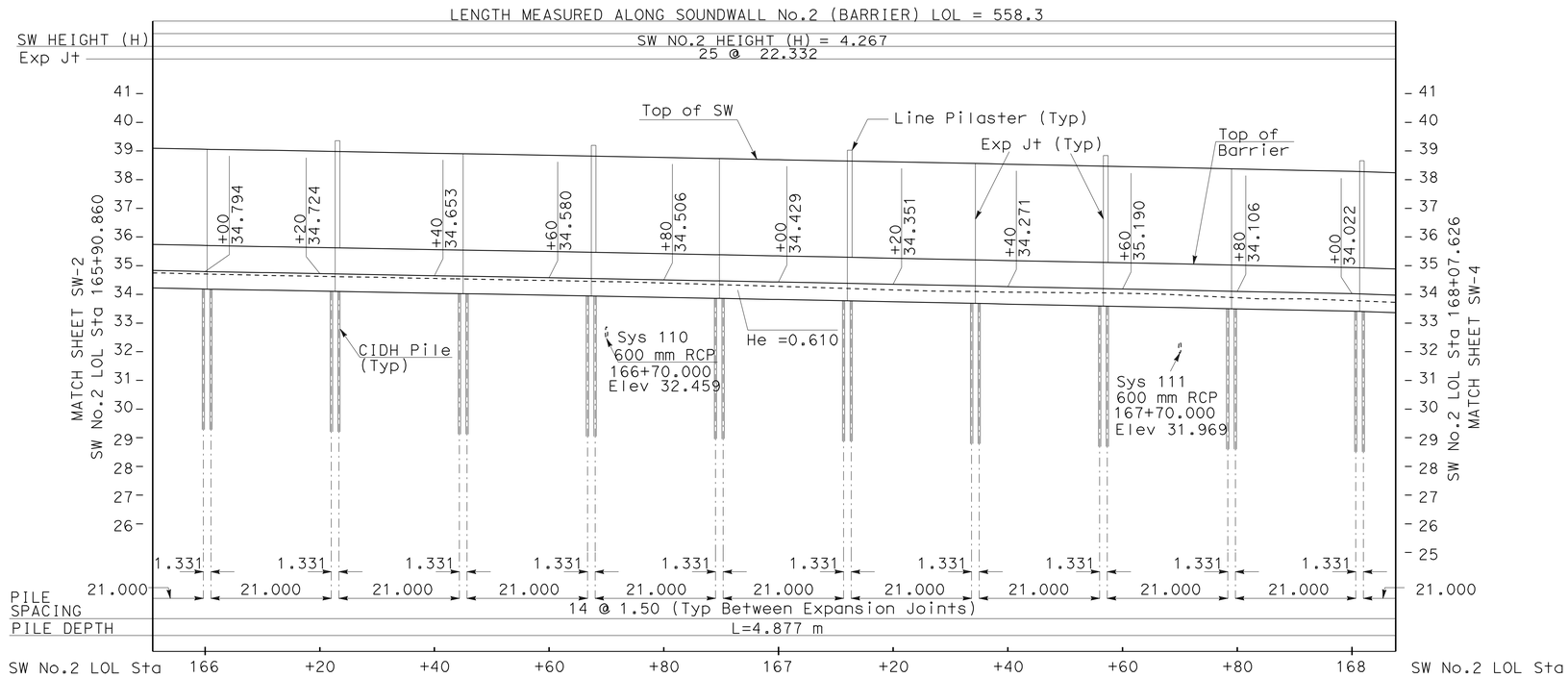

ELEVATION
SCALE: Horiz 1:500
Vert 1:100

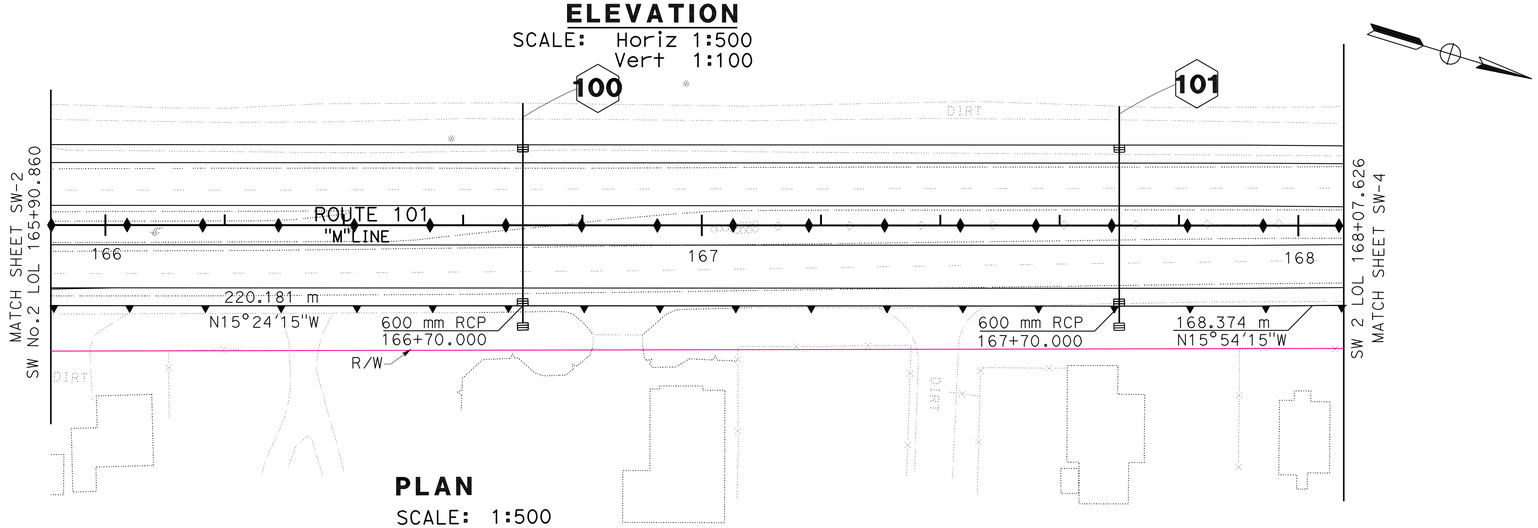

PLAN
SCALE: 1:500

SOUNDWALL No.2

ALL DIMENSIONS ARE IN METERS UNLESS OTHERWISE SHOWN

SOUNDWALL PLAN
(SOUNDWALL No. 2)

SW-8

SCALE AS SHOWN

REVISED BY	DATE REVISED

CALCULATED-DESIGNED BY: ADEL NAJAR
CHECKED BY: DAN MASSA
FUNCTIONAL SUPERVISOR: DAVID FRANKE

STATE OF CALIFORNIA - DEPARTMENT OF TRANSPORTATION
06-DESIGN
Caltrans

LAST REVISION 05-15-10
DATE PLOTTED => 03-AUG-2010
TIME PLOTTED => 13:05

NOTE:
1. This Plan Is Accurate For Soundwall Work Only.
2. See Drainage Layouts and Profiles for System Details.

Dist	COUNTY	ROUTE	KILOMETER POST TOTAL PROJECT	SHEET No.	TOTAL SHEETS
05	Mon	101	R146.8/159.7	1031	1402

REGISTERED CIVIL ENGINEER — DATE 5-16-10

7-26-10
PLANS APPROVAL DATE

REGISTERED PROFESSIONAL ENGINEER — DANIEL B. MASSA No. 59095 Exp. 6/30/11 CIVIL — STATE OF CALIFORNIA

THE STATE OF CALIFORNIA OR ITS OFFICERS OR AGENTS SHALL NOT BE RESPONSIBLE FOR THE ACCURACY OR COMPLETENESS OF ELECTRONIC COPIES OF THIS PLAN SHEET.

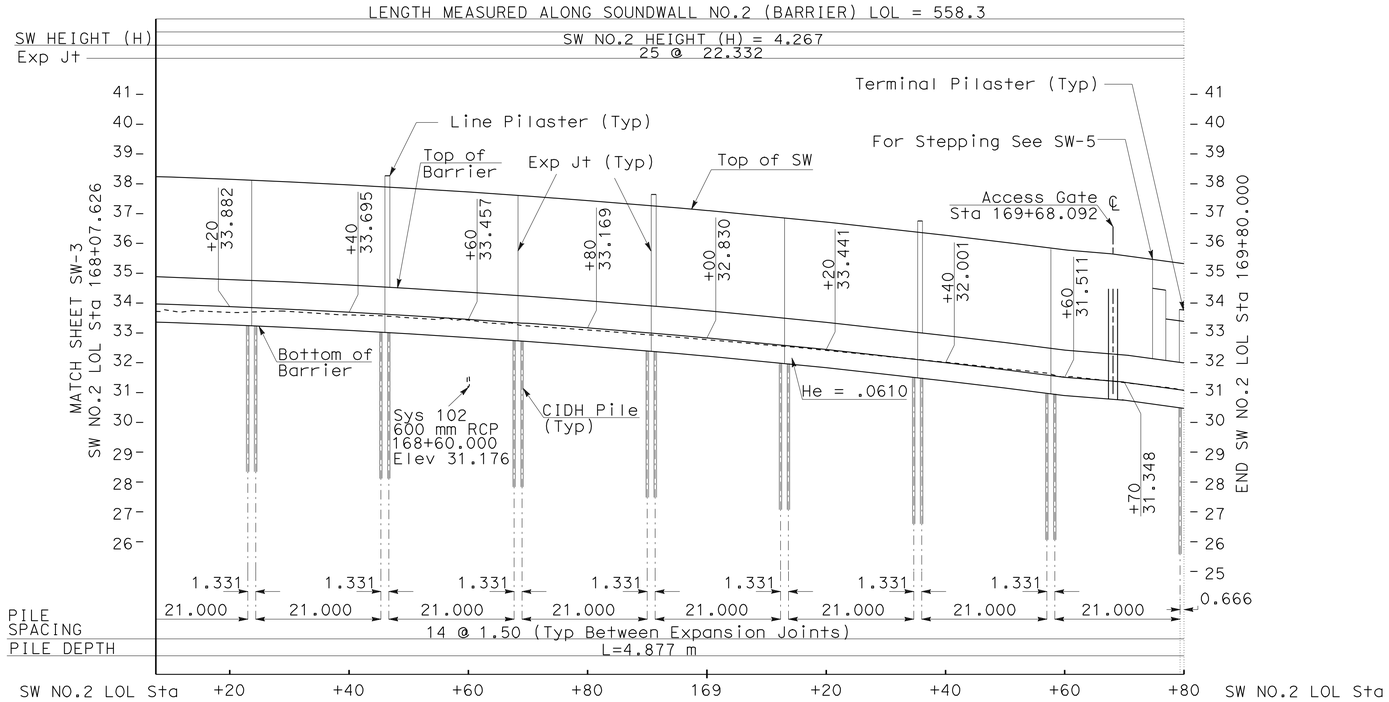

ELEVATION

SCALE: Horiz 1:500
Vert 1:100

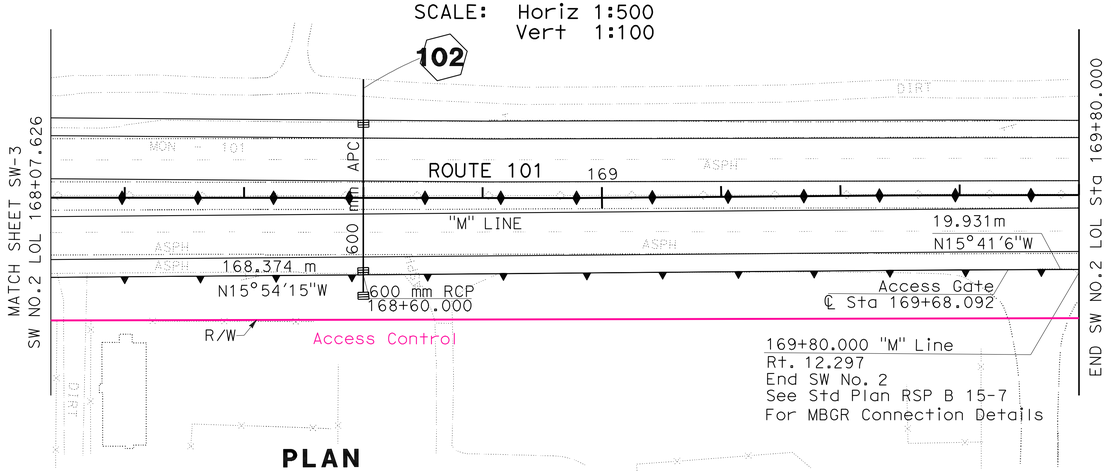

PLAN

SCALE: 1:500

SOUNDWALL NO.2

ALL DIMENSIONS ARE IN METERS UNLESS OTHERWISE SHOWN

SOUNDWALL PLAN (SOUNDWALL No. 2)

SW-9

SCALE AS SHOWN

REVISED BY	DATE REVISED

CALCULATED-DESIGNED BY: ADEL NAJAR
CHECKED BY: DAN MASSA
FUNCTIONAL SUPERVISOR: DAVID FRANKE

STATE OF CALIFORNIA - DEPARTMENT OF TRANSPORTATION
Caltrans
06-DESIGN

LAST REVISION 05-15-10
DATE PLOTTED => 03-AUG-2010
TIME PLOTTED => 09:55

Dist	COUNTY	ROUTE	KILOMETER POST TOTAL PROJECT	SHEET No.	TOTAL SHEETS
05	Mon	101	R146.8/159.7	1032	1402

Caltrans Metric

LICENSED LANDSCAPE ARCHITECT

7-26-10
PLANS APPROVAL DATE

LICENSED LANDSCAPE ARCHITECT SCOTT P. DOWLAN No. 4401 Signature 9/30/10 Renewal Date 09/11/10 Date Signed STATE OF CALIFORNIA

THE STATE OF CALIFORNIA OR ITS OFFICERS OR AGENTS SHALL NOT BE RESPONSIBLE FOR THE ACCURACY OR COMPLETENESS OF SCANNED COPIES OF THIS PLAN SHEET.

NOTES:

1. FOR STRUCTURAL DETAILS SEE OTHER SHEETS.
2. ALL EXPOSED FULL BLOCK ENDS AT WALL AND PILASTERS SHALL BE SPLIT FACE BLOCK.
3. ALL EXPOSED WALL CAP ENDS AND PILASTER CAPS SHALL BE SPLIT FACE BLOCK.
4. MORTAR IN BLOCK JOINTS SHALL BE TOOLED CONCAVE.
5. ALL LINE AND TERMINAL PILASTERS SHALL BE CONSTRUCTED PLUMB.
6. INSTALL CORE HOLE (PLANT) AT 2.5 METERS ON CENTER, TYPICAL. SEE STANDARD PLANS.
7. ACCESS GATE STEEL CHANNEL TO BE MOUNTED WITH SPACERS TO ACCOMODATE SPLIT FACE BLOCK.

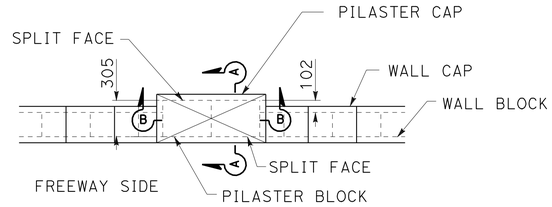

PLAN VIEW
PILASTER

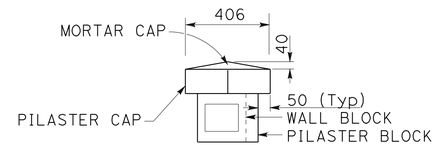

SECTION A-A
PILASTER CAP

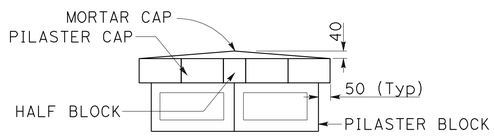

SECTION B-B
PILASTER CAP

MASONRY UNIT KEY

A	WALL BLOCK - SPLIT FACE 2 SIDES. EXPOSED WALL ENDS SPLIT FACE, 2 SIDES 1 END. FEDERAL COLOR No. 20095
B	WALL CAP - SPLIT FACE 2 SIDES. EXPOSED CAP ENDS SPLIT FACE, 2 SIDES 1 END. FEDERAL COLOR No. 30340
C	PILASTER BLOCK - SPLIT FACE 2 SIDES. FEDERAL COLOR No. 36440
D	PILASTER BLOCK - SPLIT FACE 2 SIDES. EXPOSED FULL BLOCK ENDS SPLIT FACE, 2 SIDES 1 END. FEDERAL COLOR No. 30340
E	PILASTER CAP - SPLIT FACE 1 SIDE 1 END AND SPLIT FACE 1 END. FEDERAL COLOR No. 30340

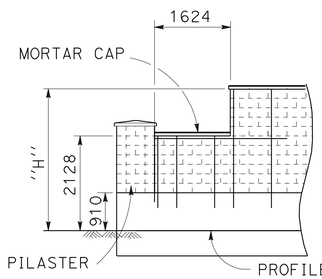

H=3048

SECTION
SINGLE STEP

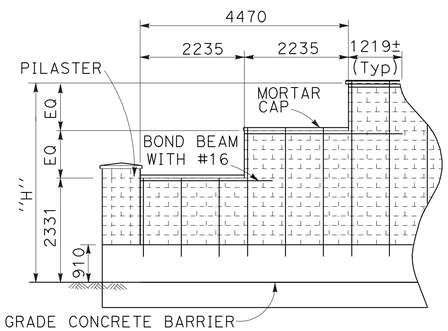

H=4267

SECTION
2 STEPS

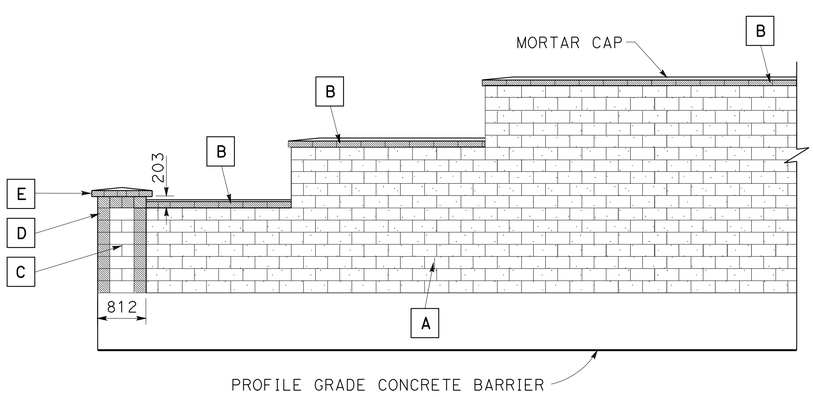

TYPICAL ELEVATION
TERMINAL PILASTER

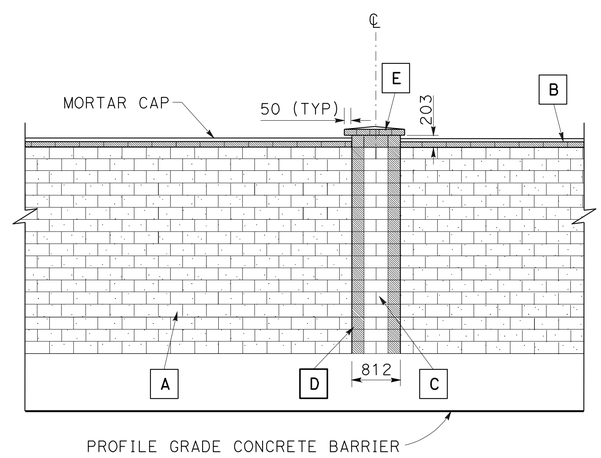

TYPICAL ELEVATION
LINE PILASTER

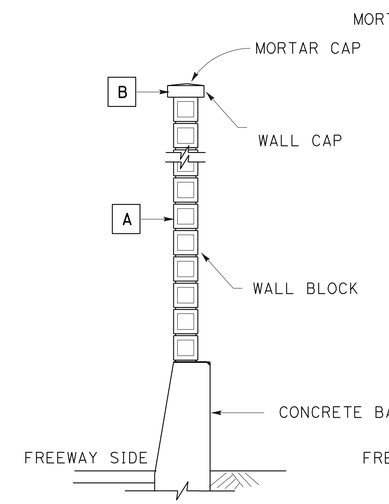

TYPICAL SECTION
WALL

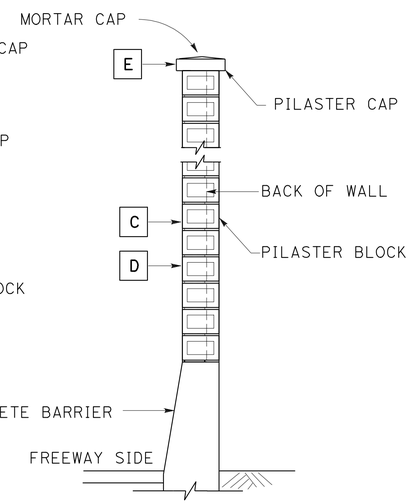

TYPICAL SECTION
PILASTER

ALL DIMENSIONS ARE IN MILLIMETERS UNLESS OTHERWISE SHOWN.

SOUNDWALL AESTHETIC DETAILS

NO SCALE

SW-10

REVISED BY	DATE REVISED
SCOTT DOWLAN	CORBY KILMER

CALCULATED-DESIGNED BY / CHECKED BY

SENIOR LANDSCAPE ARCHITECT: DENNIS REEVES

STATE OF CALIFORNIA - DEPARTMENT OF TRANSPORTATION
Caltrans LANDSCAPE ARCHITECTURE

LAST REVISION 05-17-10 | DATE PLOTTED => 03-AUG-2010 | TIME PLOTTED => 09:55

DIST	COUNTY	ROUTE	KILOMETER POST TOTAL PROJECT	SHEET No	TOTAL SHEETS
05	Mon	101	R146.8/159.7	1033	1402

REGISTERED CIVIL ENGINEER 6-08-09

7-26-10
PLANS APPROVAL DATE

REGISTERED PROFESSIONAL ENGINEER
Dan Appelbaum
No. C50001
Exp. 06-30-11
CIVIL
STATE OF CALIFORNIA

The State of California or its officers or agents shall not be responsible for the accuracy or completeness of electronic copies of this plan sheet.

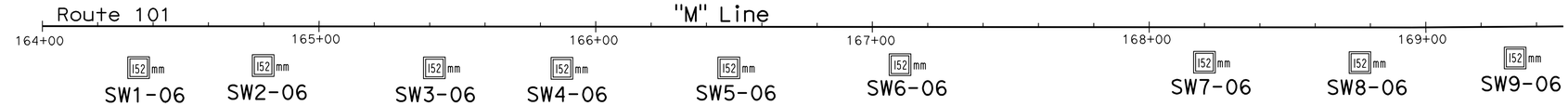

PLAN
1,1000

BENCH MARK

PM 92.55 Elev. 34.778 m (NGVD29)
0.025 m IP w/Caltrans control pp & nail, down 0.015 m, 3.4 m S of wall, 2.1 m E of bus stop sign, 1.5 m NE of street sign, at NE cor hwy 101 & White Rd.

Notes,

1. Borings SW1-06 through SW9-06 were drilled using 152 mm hollow stem augers.
2. Because of overhead utility conflicts, borings SW1-06 through SW7-06 and SW9-06 were drilled without conducting SPT's.
3. 35 mm samples were taken using a standard split barrel sampler with an inside diameter (I.D.) of 35 mm and an outside diameter (O.D.) of 51 mm.
4. A safety driver hammer was used to advance the sampler using a 63.5 Kg hammer with a 762 mm drop.
5. qu=unconfined compressive strength as determined by pocket penetrometer (kPa).
6. Groundwater not encountered during subsurface investigation.

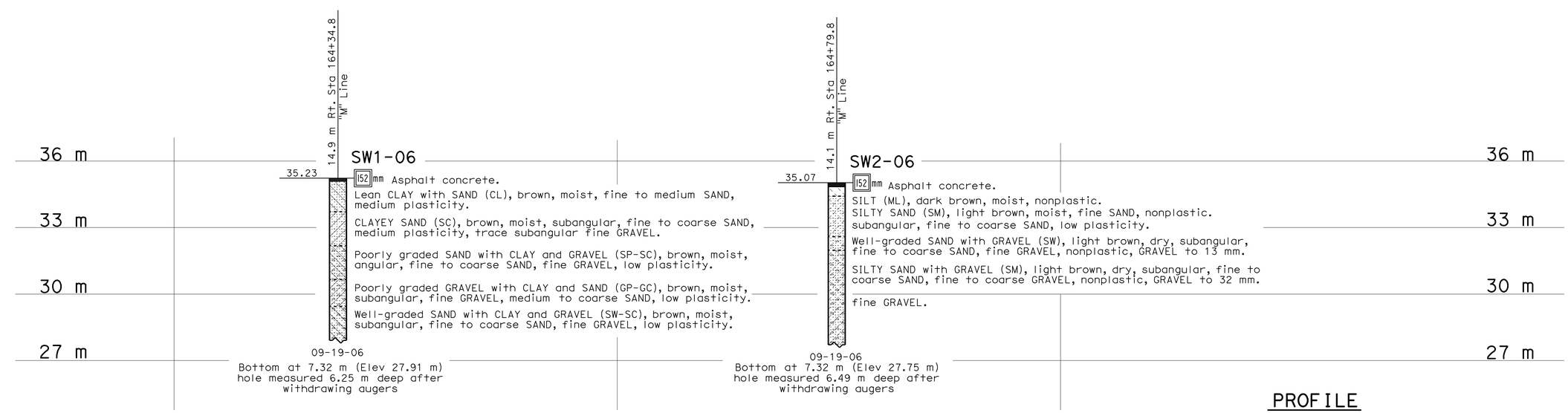

PROFILE
HOR. 1:200
VER. 1:100

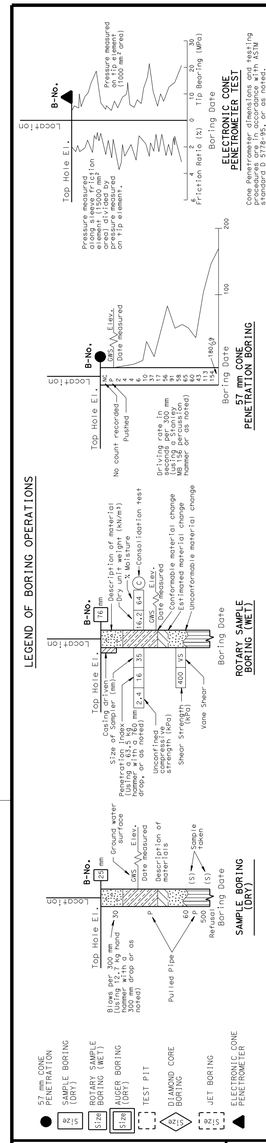

LEGEND OF EARTH MATERIALS

GRAVEL, SAND, SILT, CLAY, SANDY CLAY or CLAYEY SAND, SANDY SILT or SILTY SAND, SILTY CLAY, CLAYEY SILT, PEAT and/or ORGANIC MATTER, COBBLES and/or BOULDERS, IGNEOUS ROCK, SEDIMENTARY ROCK, METAMORPHIC

CONSISTENCY CLASSIFICATION FOR SOILS

According to the Standard Penetration Test

Granular: SPT N-Value (Blows/0.3m)	Granular	Cohesive: SPT N-Value (Blows/0.3m)	Cohesive
0-4	Very Loose	<2	Very Soft
5-10	Loose	2-4	Soft
11-30	Medium Dense	5-8	Firm
31-50	Dense	9-15	Stiff
>50	Very Dense	16-30	Very stiff
		>30	Hard

NOTE, Classification of earth material as shown on this sheet is based upon field inspection and is not to be construed to imply mechanical analysis.

OGS CIVIL LOG OF TEST BORINGS SHEET (METRIC) (REV. 4/04)

ENGINEERING SERVICES	GEOTECHNICAL SERVICES
DRAWN BY	F. Nguyen 1/08
CHECKED BY	D. Appelbaum

FIELD INVESTIGATION BY, D. Appelbaum

STATE OF CALIFORNIA DEPARTMENT OF TRANSPORTATION

DIVISION OF ENGINEERING SERVICES STRUCTURE DESIGN
DESIGN BRANCH

BRIDGE NO.
KILOMETER POST R146.77/161.58

SOUND WALL NO. 2 SW-11
LOG OF TEST BORINGS 1 OF 4

ALL DIMENSIONS ARE IN METERS UNLESS OTHERWISE SHOWN

ORIGINAL SCALE IN MILLIMETERS FOR REDUCED PLANS 0 10 20 30 40 50 60 70 80 90 100

CU 05
EA 0161E1

DISREGARD PRINTS BEARING EARLIER REVISION DATES

REVISION DATES (PRELIMINARY STAGE ONLY) 03-14-08 02-10-09

SHEET OF

FILE => 50161Erb005.dgn

USERNAME => trmikesl DATE PLOTTED => 03-AUG-2010 TIME PLOTTED => 09:55

DIST	COUNTY	ROUTE	KILOMETER POST TOTAL PROJECT	SHEET No	TOTAL SHEETS
05	Mon	101	R146.8/159.7	1034	1402

REGISTERED CIVIL ENGINEER 6-08-09

7-26-10
PLANS APPROVAL DATE

REGISTERED PROFESSIONAL ENGINEER
Dan Appelbaum
No. C50001
Exp. 06-30-11
CIVIL
STATE OF CALIFORNIA

The State of California or its officers or agents shall not be responsible for the accuracy or completeness of electronic copies of this plan sheet.

FOR PLAN VIEW, SEE
"LOG OF TEST BORINGS" 1 OF 4

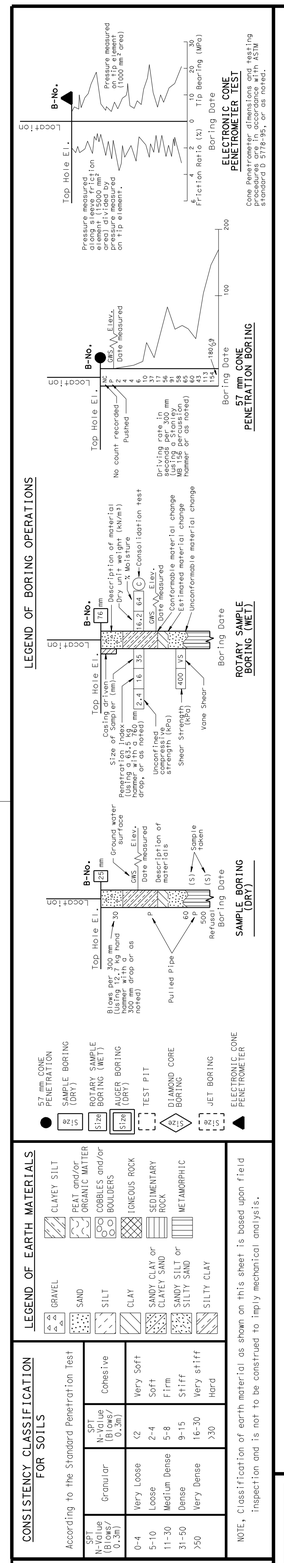

14.9 m Rt. Sta 165+41.7 "M" Line

SW3-06

34.89

152 mm Asphalt concrete.

SILTY SAND (SM), dark brown, moist, angular, medium to coarse SAND, nonplastic, trace angular fine GRAVEL.

SANDY lean CLAY (CL), brown, moist, fine SAND, medium plasticity.
fine to coarse SAND.

Well-graded SAND (SW), brown, moist, subangular, fine to coarse SAND, nonplastic, trace subangular fine GRAVEL.

CLAYEY SAND (SC), black, moist, subangular, fine to coarse SAND, low plasticity.

09-19-06
Bottom at 7.32 m (Elev 27.57 m)
hole measured 6.55 m deep after withdrawing augers

15.0 m Rt. Sta 165+87.8 "M" Line

SW4-06

34.63

152 mm Asphalt concrete.

SANDY lean CLAY (CL), dark brown, moist, subangular, fine to coarse SAND, low plasticity.

Lean CLAY (CL), brown, moist, low plasticity.

Well-graded SAND with GRAVEL (SW), brown, moist, angular, fine to coarse SAND/fine to coarse GRAVEL, nonplastic.

09-20-06
Bottom at 7.32 m (Elev 27.31 m)
hole measured 6.95 m deep after withdrawing augers

14.8 m Rt. Sta 166+48.1 "M" Line

SW5-06

34.46

152 mm Asphalt concrete.

CLAYEY SAND (SC), dark brown, moist, fine SAND, low plasticity, trace angular coarse SAND and fine GRAVEL.

SANDY lean CLAY (CL), brown, moist, angular, fine to medium SAND, medium plasticity.

CLAYEY SAND (SC), light brown, moist, angular, fine to coarse SAND, low plasticity.
Well-graded SAND with GRAVEL (SW), light brown, moist, angular, fine to coarse SAND/fine to coarse GRAVEL, nonplastic, GRAVEL to 32-mm.

09-20-06
Bottom at 7.32 m (Elev 27.14 m)
hole measured 6.55 m deep after withdrawing augers

33 m
30 m
27 m

165+30 165+80 166+30 166+80

PROFILE
HOR. 1:250
VER. 1:100

Caltrans Metric

ENGINEERING SERVICES	GEOTECHNICAL SERVICES
DRAWN BY	F. Nguyen 1/08
CHECKED BY	D. Appelbaum

FIELD INVESTIGATION BY, D. Appelbaum

STATE OF CALIFORNIA
DEPARTMENT OF TRANSPORTATION

DIVISION OF ENGINEERING SERVICES
STRUCTURE DESIGN
DESIGN BRANCH

BRIDGE NO.
KILOMETER POST R146.77/161.58

SOUND WALL NO. 2 SW-12
LOG OF TEST BORINGS 2 OF 4

ALL DIMENSIONS ARE IN METERS UNLESS OTHERWISE SHOWN

ORIGINAL SCALE IN MILLIMETERS FOR REDUCED PLANS 0 10 20 30 40 50 60 70 80 90 100

CU 05
EA 0161E1

DISREGARD PRINTS BEARING EARLIER REVISION DATES

REVISION DATES (PRELIMINARY STAGE ONLY) 03-14-08 02-10-09

SHEET OF

FILE => 50161Erb006.dgn

USERNAME => trmikesl DATE PLOTTED => 03-AUG-2010 TIME PLOTTED => 09:55

DIST	COUNTY	ROUTE	KILOMETER POST TOTAL PROJECT	SHEET No	TOTAL SHEETS
05	Mon	101	R146.8/159.7	1035	1402

REGISTERED CIVIL ENGINEER 6-08-09

7-26-10
PLANS APPROVAL DATE

REGISTERED PROFESSIONAL ENGINEER
Dan Appelbaum
No. C50001
Exp. 06-30-11
CIVIL
STATE OF CALIFORNIA

The State of California or its officers or agents shall not be responsible for the accuracy or completeness of electronic copies of this plan sheet.

LEGEND OF BORING OPERATIONS

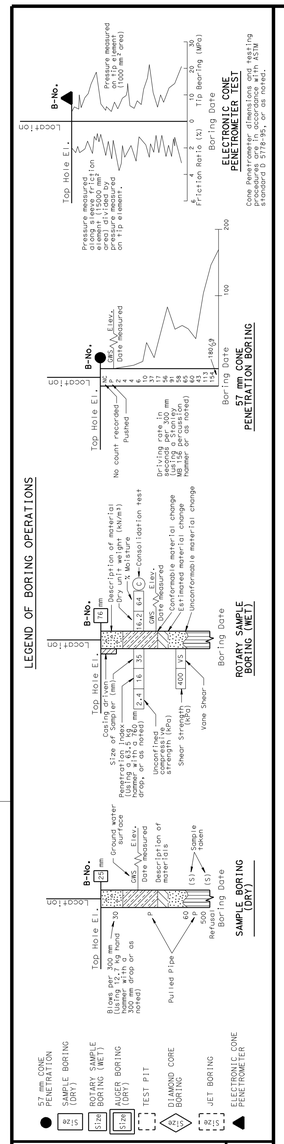

LEGEND OF EARTH MATERIALS

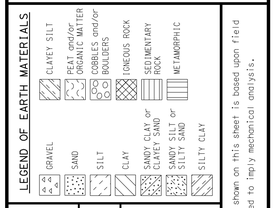

NOTE, Classification of earth material as shown on this sheet is based upon field inspection and is not to be construed to imply mechanical analysis.

CONSISTENCY CLASSIFICATION FOR SOILS

According to the Standard Penetration Test

SPT N-Value (Blows/ 0.3m)	Granular	SPT N-Value (Blows/ 0.3m)	Cohesive
0-4	Very Loose	<2	Very Soft
5-10	Loose	2-4	Soft
11-30	Medium Dense	5-8	Firm
31-50	Dense	9-15	Stiff
>50	Very Dense	16-30	Very stiff
		>30	Hard

OGS CIVIL LOG OF TEST BORINGS SHEET (METRIC) (REV. 4/04)

FOR PLAN VIEW, SEE
"LOG OF TEST BORINGS" 1 OF 4

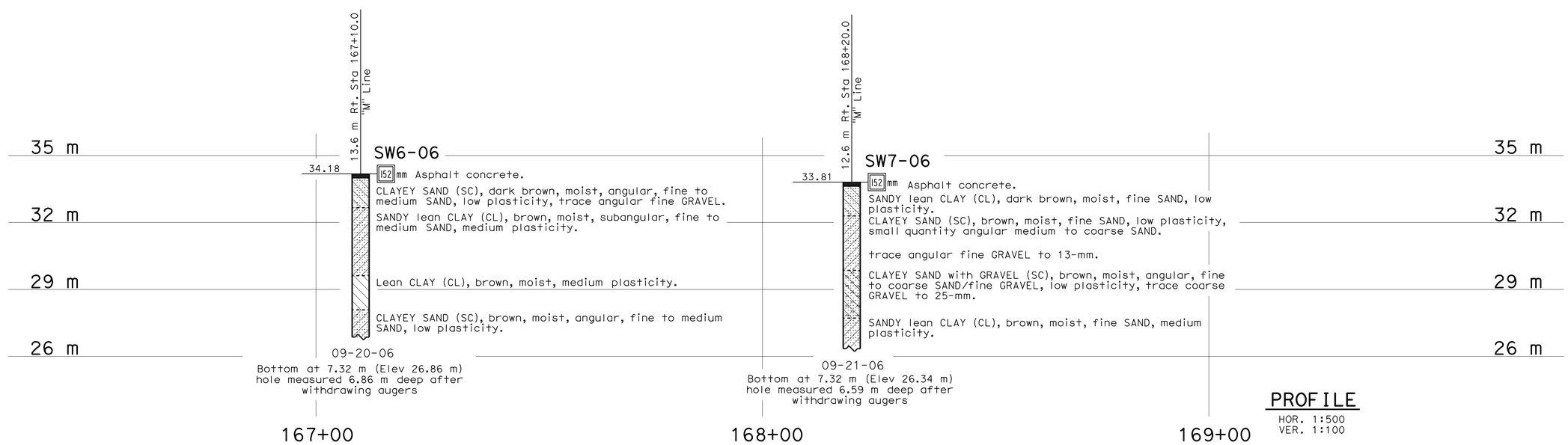

PROFILE
HOR. 1:500
VER. 1:100

Caltrans Metric

ENGINEERING SERVICES	GEOTECHNICAL SERVICES
DRAWN BY	F. Nguyen 1/08
CHECKED BY	D. Appelbaum

FIELD INVESTIGATION BY, D. Appelbaum

STATE OF CALIFORNIA DEPARTMENT OF TRANSPORTATION

DIVISION OF ENGINEERING SERVICES STRUCTURE DESIGN DESIGN BRANCH

BRIDGE NO.
KILOMETER POST R146.77/161.58

SOUND WALL NO. 2 SW-13
LOG OF TEST BORINGS 3 OF 4

ALL DIMENSIONS ARE IN METERS UNLESS OTHERWISE SHOWN

ORIGINAL SCALE IN MILLIMETERS FOR REDUCED PLANS 0 10 20 30 40 50 60 70 80 90 100

CU 05
EA 0161E1

DISREGARD PRINTS BEARING EARLIER REVISION DATES

REVISION DATES (PRELIMINARY STAGE ONLY) 03-14-08 02-18-09 06-05-09

SHEET OF

FILE => 50161Erb007.dgn

USERNAME => trmikesl DATE PLOTTED => 03-AUG-2010 TIME PLOTTED => 09:55

DIST	COUNTY	ROUTE	KILOMETER POST TOTAL PROJECT	SHEET No	TOTAL SHEETS
05	Mon	101	R146.8/159.7	1036	1402

REGISTERED CIVIL ENGINEER 6-08-09

7-26-10
PLANS APPROVAL DATE

REGISTERED PROFESSIONAL ENGINEER
Dan Appelbaum
No. C50001
Exp. 06-30-11
CIVIL
STATE OF CALIFORNIA

The State of California or its officers or agents shall not be responsible for the accuracy or completeness of electronic copies of this plan sheet.

LEGEND OF BORING OPERATIONS

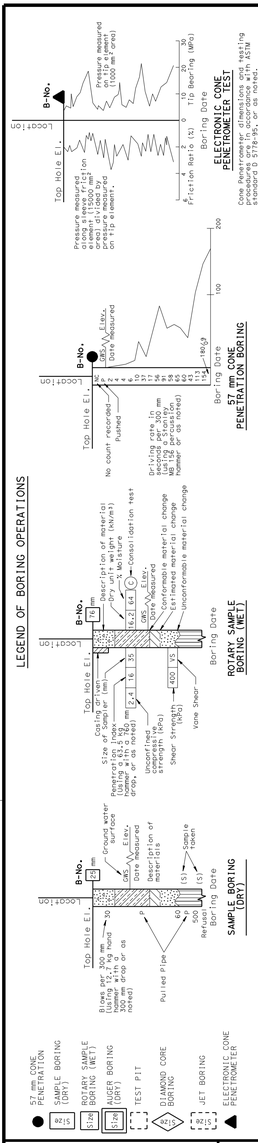

LEGEND OF EARTH MATERIALS

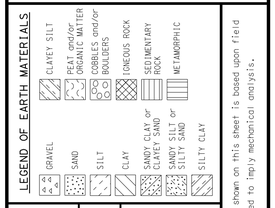

CONSISTENCY CLASSIFICATION FOR SOILS

According to the Standard Penetration Test

SPT N-Value (Blows/0.3m)	Granular	SPT N-Value (Blows/0.3m)	Cohesive
0-4	Very Loose	<2	Very Soft
5-10	Loose	2-4	Soft
11-30	Medium Dense	5-8	Firm
31-50	Dense	9-15	Stiff
>50	Very Dense	16-30	Very stiff
		>30	Hard

NOTE, Classification of earth material as shown on this sheet is based upon field inspection and is not to be construed to imply mechanical analysis.

OGS CIVIL LOG OF TEST BORINGS SHEET (METRIC) (REV. 4/04)

FOR PLAN VIEW, SEE
"LOG OF TEST BORINGS" 1 OF 4

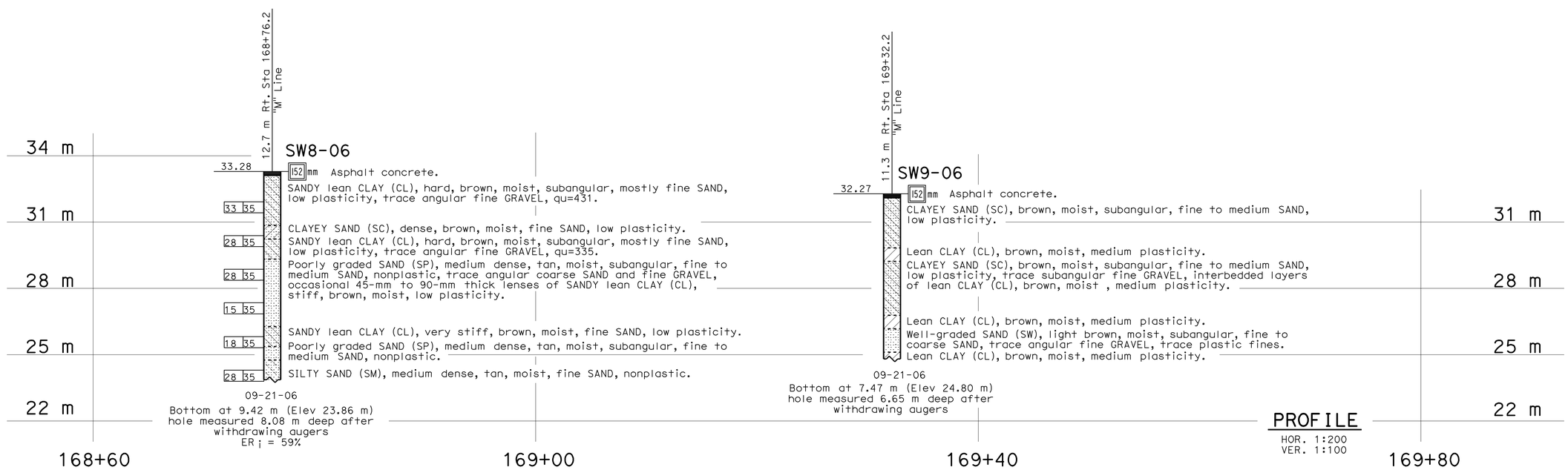

Caltrans Metric

ENGINEERING SERVICES	GEOTECHNICAL SERVICES
DRAWN BY	F. Nguyen 1/08
CHECKED BY	D. Appelbaum

FIELD INVESTIGATION BY, D. Appelbaum

STATE OF CALIFORNIA
DEPARTMENT OF TRANSPORTATION

DIVISION OF ENGINEERING SERVICES
STRUCTURE DESIGN
DESIGN BRANCH

BRIDGE NO.
KILOMETER POST R146.77/161.58

SOUND WALL NO. 2 SW-14
LOG OF TEST BORINGS 4 OF 4

ALL DIMENSIONS ARE IN METERS UNLESS OTHERWISE SHOWN

ORIGINAL SCALE IN MILLIMETERS FOR REDUCED PLANS 0 10 20 30 40 50 60 70 80 90 100

CU 05
EA 0161E1

DISREGARD PRINTS BEARING EARLIER REVISION DATES

REVISION DATES (PRELIMINARY STAGE ONLY) 03-14-08 02-10-09

SHEET OF

FILE => 50161Erb008.dgn

USERNAME => trmikesl DATE PLOTTED => 03-AUG-2010 TIME PLOTTED => 09:56

Dist	COUNTY	ROUTE	KILOMETER POST TOTAL PROJECT	SHEET No.	TOTAL SHEETS
05	Mon	101	R146.8/159.7	1037	1402

LICENSED LANDSCAPE ARCHITECT

7-26-10
PLANS APPROVAL DATE

LICENSED LANDSCAPE ARCHITECT SCOTT P. DOWLAN No. 4410 Signature 9/30/10 Renewal Date 05/17/10 Date Signed STATE OF CALIFORNIA

THE STATE OF CALIFORNIA OR ITS OFFICERS OR AGENTS SHALL NOT BE RESPONSIBLE FOR THE ACCURACY OR COMPLETENESS OF SCANNED COPIES OF THIS PLAN SHEET.

Caltrans Metric

NOTES:

1. FOR ACCURATE RIGHT OF WAY AND ACCESS DATA, CONTACT RIGHT OF WAY ENGINEERING AT THE DISTRICT OFFICE.
2. TEMPORARY IRRIGATION SYSTEM BLACKIE RD STA 30+00 TO 32+00 R+ SEE STAGE CONSTRUCTION PLANS (STAGE 1 PHASE 6).
3. SEE STAGE CONSTRUCTION PLANS (STAGE 1 PHASE 1) FOR REMAINDER OF WORK.

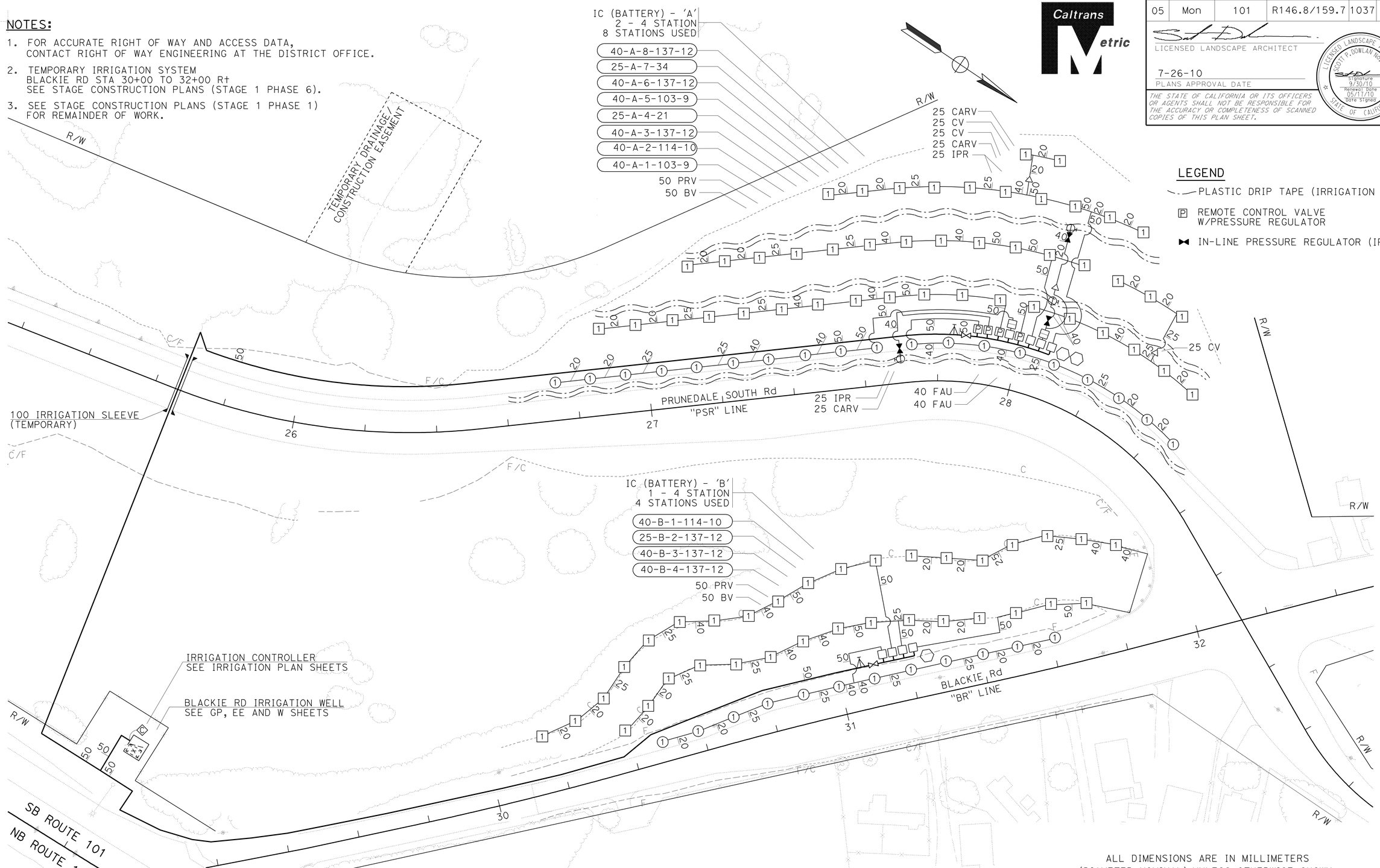

LEGEND

- PLASTIC DRIP TAPE (IRRIGATION LINE)
- P REMOTE CONTROL VALVE W/PRESSURE REGULATOR
- IN-LINE PRESSURE REGULATOR (IPR)

ALL DIMENSIONS ARE IN MILLIMETERS (DIAMETER NOMINAL) UNLESS OTHERWISE SHOWN.

TEMPORARY IRRIGATION PLAN

SCALE 1:500

TIP-1

THIS PLAN ACCURATE FOR TEMPORARY IRRIGATION WORK ONLY.

STATE OF CALIFORNIA - DEPARTMENT OF TRANSPORTATION
Caltrans LANDSCAPE ARCHITECTURE

SENIOR LANDSCAPE ARCHITECT: DENNIS REEVES
CALCULATED-DESIGNED BY: SCOTT DOWLAN
CHECKED BY: CORBY KILMER
REVISED BY / DATE REVISED

LAST REVISION 05-17-10 | DATE PLOTTED => 03-AUG-2010 | TIME PLOTTED => 09:56

Dist	COUNTY	ROUTE	KILOMETER POST TOTAL PROJECT	SHEET No.	TOTAL SHEETS
05	Mon	101	R146.8/159.7	1038	1402

LICENSED LANDSCAPE ARCHITECT

7-26-10
PLANS APPROVAL DATE

LICENSED LANDSCAPE ARCHITECT SCOTT P. DOWLAN No. 4910 Signature 9/30/10 Renewal Date 05/17/10 Date Signed STATE OF CALIFORNIA

THE STATE OF CALIFORNIA OR ITS OFFICERS OR AGENTS SHALL NOT BE RESPONSIBLE FOR THE ACCURACY OR COMPLETENESS OF SCANNED COPIES OF THIS PLAN SHEET.

Caltrans Metric

NOTES:

1. FOR ACCURATE RIGHT OF WAY AND ACCESS DATA, CONTACT RIGHT OF WAY ENGINEERING AT THE DISTRICT OFFICE.
2. SEE STAGE CONSTRUCTION PLANS (STAGE 1 PHASE 2).

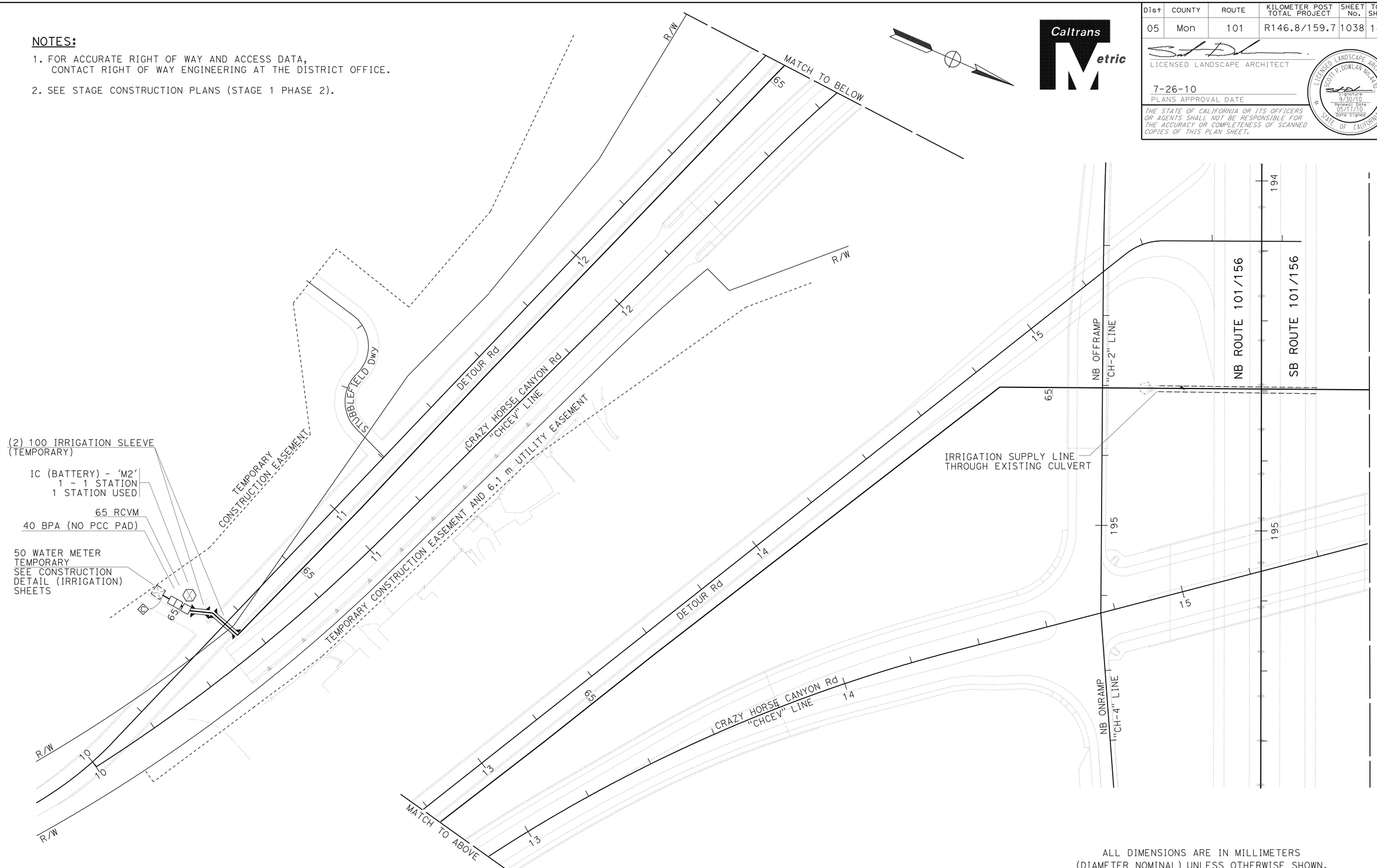

ALL DIMENSIONS ARE IN MILLIMETERS (DIAMETER NOMINAL) UNLESS OTHERWISE SHOWN.

THIS PLAN ACCURATE FOR TEMPORARY IRRIGATION WORK ONLY.

TEMPORARY IRRIGATION PLAN

SCALE 1:500

TIP-2

REVISED BY	DATE REVISED

CALCULATED-DESIGNED BY	SCOTT DOWLAN
CHECKED BY	CORBY KILMER

SENIOR LANDSCAPE ARCHITECT DENNIS REEVES

STATE OF CALIFORNIA - DEPARTMENT OF TRANSPORTATION
Caltrans LANDSCAPE ARCHITECTURE

LAST REVISION 05-17-10 | DATE PLOTTED => 03-AUG-2010 | TIME PLOTTED => 09:56

Dist	COUNTY	ROUTE	KILOMETER POST TOTAL PROJECT	SHEET No.	TOTAL SHEETS
05	Mon	101	R146.8/159.7	1039	1402

LICENSED LANDSCAPE ARCHITECT

7-26-10
PLANS APPROVAL DATE

LICENSED LANDSCAPE ARCHITECT SCOTT P. DOWLAN No. 4610 Signature 9/30/10 Renewal Date 05/17/10 Date Signed STATE OF CALIFORNIA

THE STATE OF CALIFORNIA OR ITS OFFICERS OR AGENTS SHALL NOT BE RESPONSIBLE FOR THE ACCURACY OR COMPLETENESS OF SCANNED COPIES OF THIS PLAN SHEET.

Caltrans Metric

NOTES:

1. FOR ACCURATE RIGHT OF WAY AND ACCESS DATA, CONTACT RIGHT OF WAY ENGINEERING AT THE DISTRICT OFFICE.
2. SEE STAGE CONSTRUCTION PLANS (STAGE 1 PHASE 2).

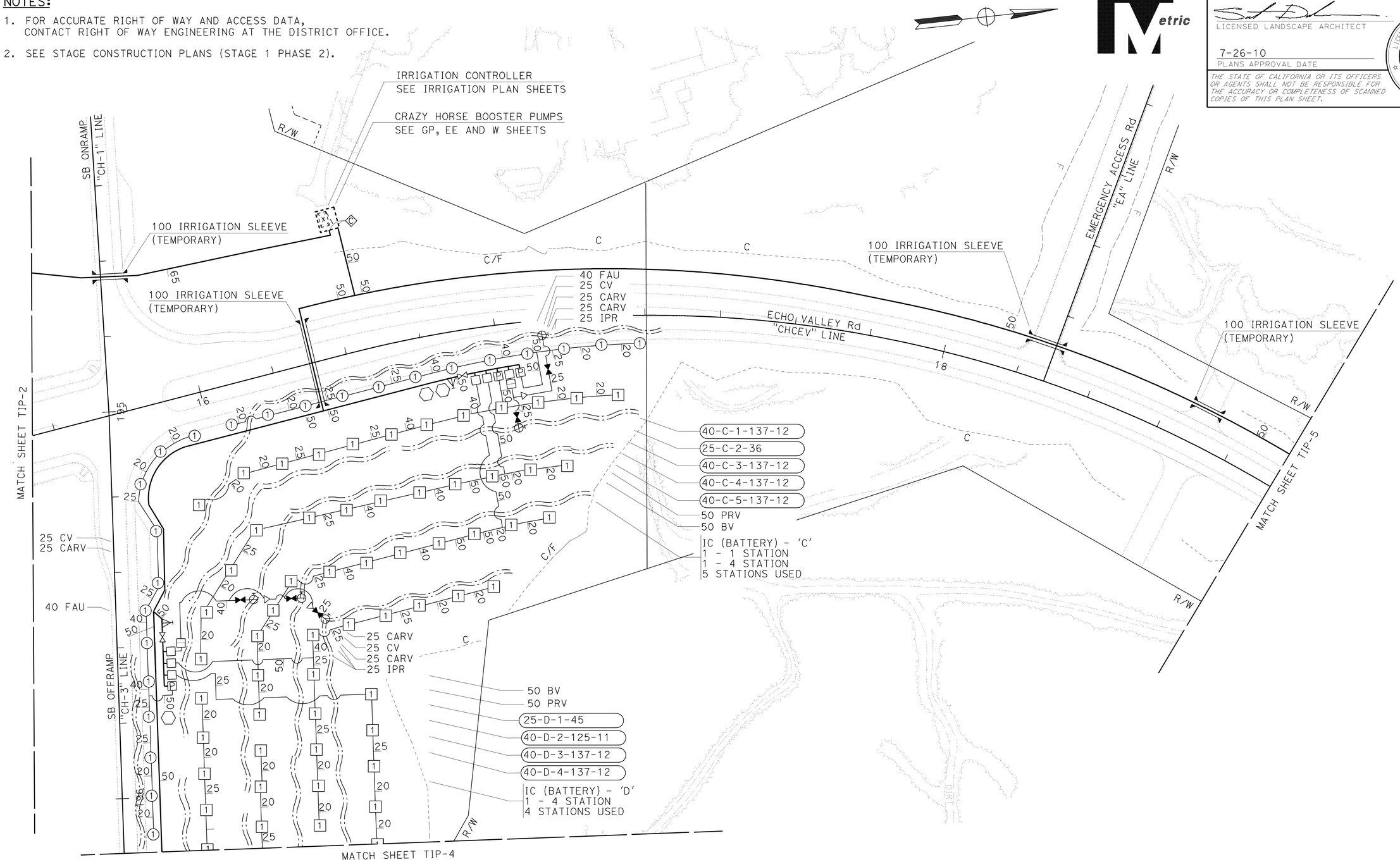

ALL DIMENSIONS ARE IN MILLIMETERS
(DIAMETER NOMINAL) UNLESS OTHERWISE SHOWN.

TEMPORARY IRRIGATION PLAN

SCALE 1:500

TIP-3

THIS PLAN ACCURATE FOR TEMPORARY IRRIGATION WORK ONLY.

STATE OF CALIFORNIA - DEPARTMENT OF TRANSPORTATION
Caltrans LANDSCAPE ARCHITECTURE

SENIOR LANDSCAPE ARCHITECT: DENNIS REEVES
CALCULATED-DESIGNED BY: SCOTT DOWLAN
CHECKED BY: CORBY KILMER
REVISED BY / DATE REVISED

LAST REVISION 05-17-10
DATE PLOTTED => 03-AUG-2010
TIME PLOTTED => 09:56

Dist	COUNTY	ROUTE	KILOMETER POST TOTAL PROJECT	SHEET No.	TOTAL SHEETS
05	Mon	101	R146.8/159.7	1040	1402

LICENSED LANDSCAPE ARCHITECT

7-26-10
PLANS APPROVAL DATE

LICENSED LANDSCAPE ARCHITECT
SCOTT P. DOWLAN No. 4410
Signature
9/30/10
Renewal Date
05/17/10
Date Signed
STATE OF CALIFORNIA

THE STATE OF CALIFORNIA OR ITS OFFICERS OR AGENTS SHALL NOT BE RESPONSIBLE FOR THE ACCURACY OR COMPLETENESS OF SCANNED COPIES OF THIS PLAN SHEET.

Caltrans Metric

NOTES:

1. FOR ACCURATE RIGHT OF WAY AND ACCESS DATA, CONTACT RIGHT OF WAY ENGINEERING AT THE DISTRICT OFFICE.
2. SEE STAGE CONSTRUCTION PLANS (STAGE 1 PHASE 2).

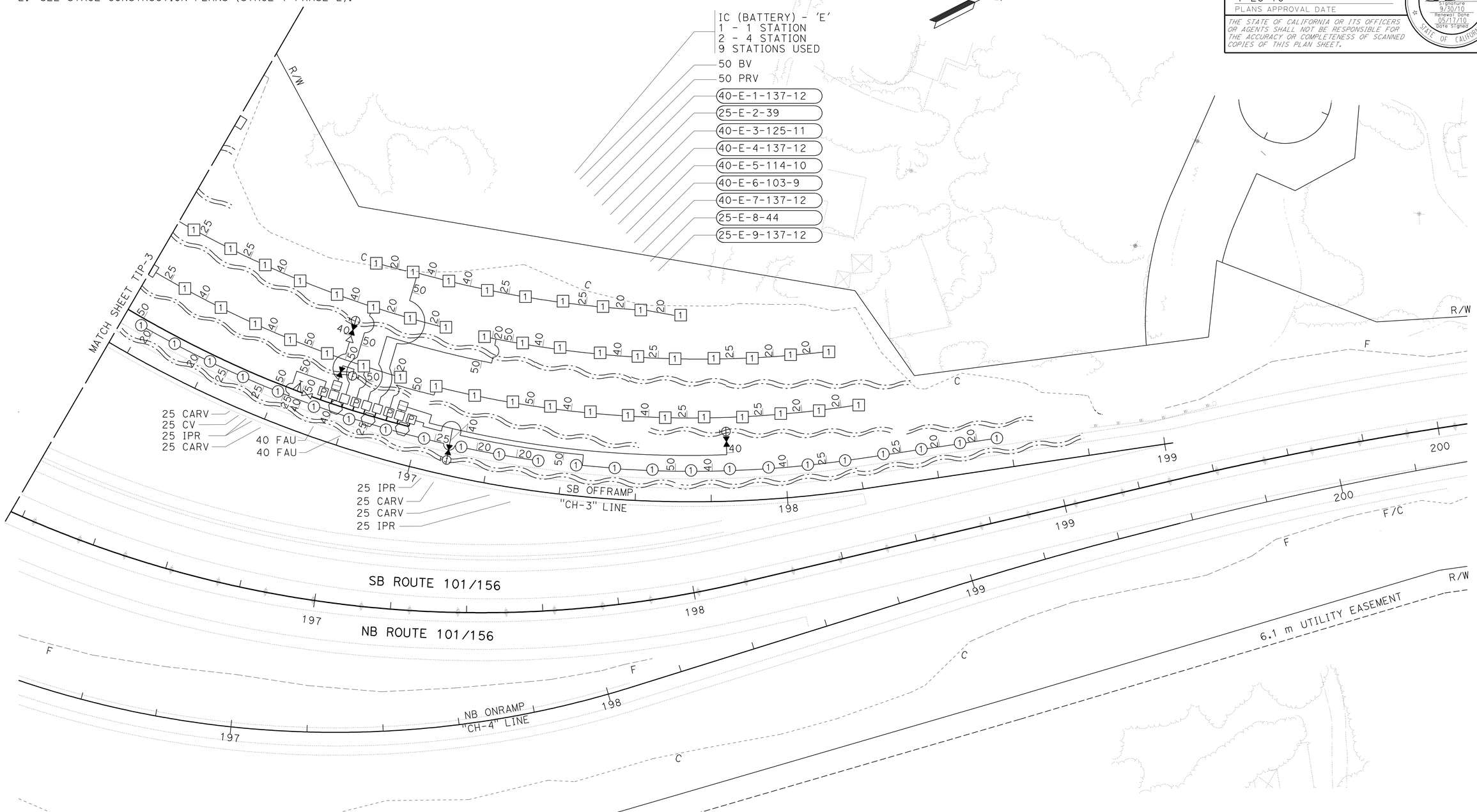

ALL DIMENSIONS ARE IN MILLIMETERS
(DIAMETER NOMINAL) UNLESS OTHERWISE SHOWN.

TEMPORARY IRRIGATION PLAN

SCALE 1:500 **TIP-4**

THIS PLAN ACCURATE FOR TEMPORARY IRRIGATION WORK ONLY.

STATE OF CALIFORNIA - DEPARTMENT OF TRANSPORTATION
Caltrans LANDSCAPE ARCHITECTURE

SENIOR LANDSCAPE ARCHITECT: DENNIS REEVES
CALCULATED-DESIGNED BY: SCOTT DOWLAN
CHECKED BY: CORBY KILMER
REVISED BY / DATE REVISED

LAST REVISION 05-17-10
DATE PLOTTED => 03-AUG-2010
TIME PLOTTED => 09:56

Dist	COUNTY	ROUTE	KILOMETER POST TOTAL PROJECT	SHEET No.	TOTAL SHEETS
05	Mon	101	R146.8/159.7	1041	1402

LICENSED LANDSCAPE ARCHITECT

7-26-10
PLANS APPROVAL DATE

LICENSED LANDSCAPE ARCHITECT
SCOTT P. DOWLAN No. 4410
Signature
9/30/10
Renewal Date
05/17/10
Date Signed
STATE OF CALIFORNIA

THE STATE OF CALIFORNIA OR ITS OFFICERS OR AGENTS SHALL NOT BE RESPONSIBLE FOR THE ACCURACY OR COMPLETENESS OF SCANNED COPIES OF THIS PLAN SHEET.

Caltrans Metric

NOTES:

1. FOR ACCURATE RIGHT OF WAY AND ACCESS DATA, CONTACT RIGHT OF WAY ENGINEERING AT THE DISTRICT OFFICE.
2. SEE STAGE CONSTRUCTION PLANS (STAGE 2 PHASE 1).

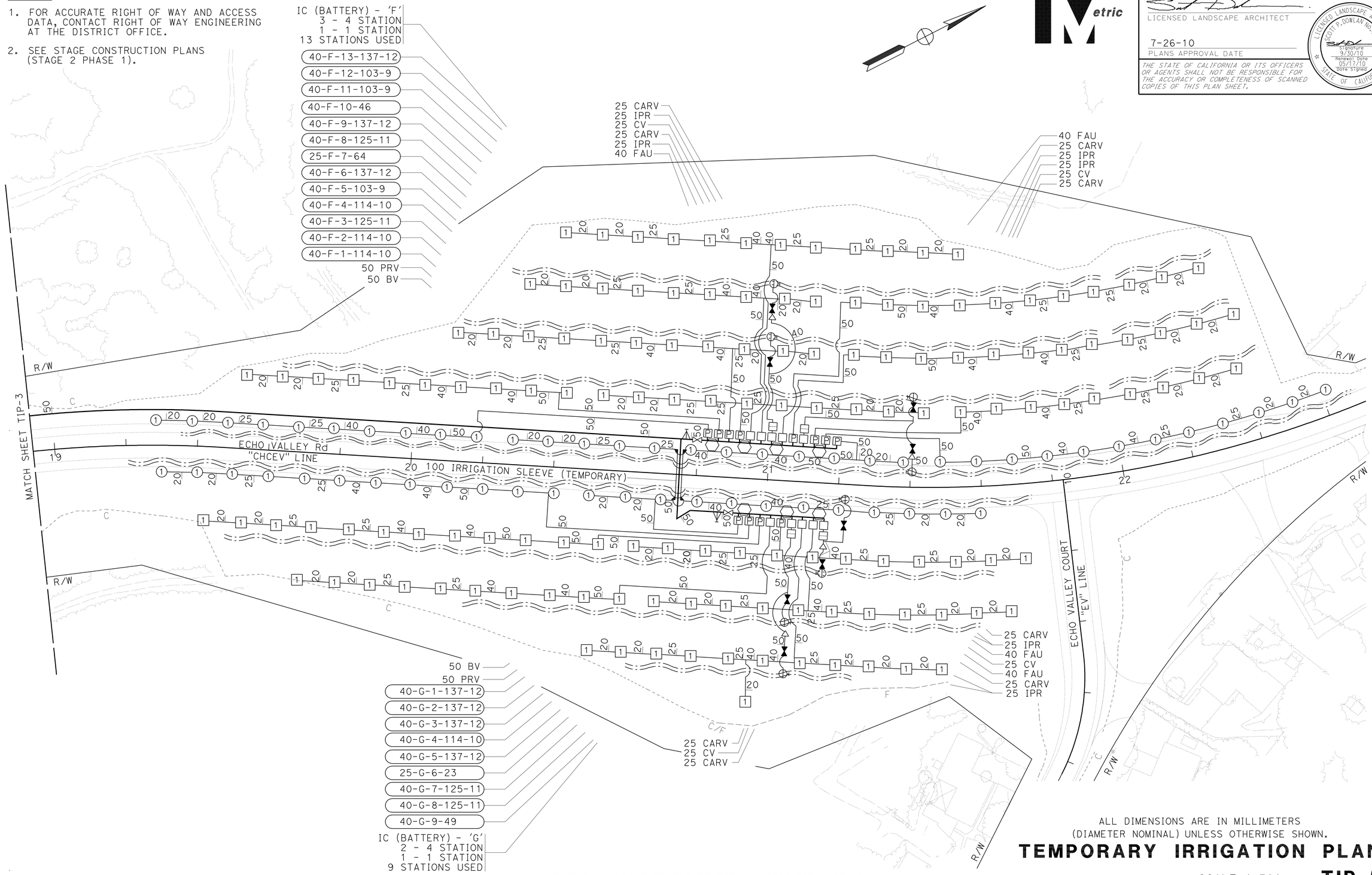

ALL DIMENSIONS ARE IN MILLIMETERS
(DIAMETER NOMINAL) UNLESS OTHERWISE SHOWN.

THIS PLAN ACCURATE FOR TEMPORARY IRRIGATION WORK ONLY.

TEMPORARY IRRIGATION PLAN

SCALE 1:500

TIP-5

SENIOR LANDSCAPE ARCHITECT	DENNIS REEVES
CALCULATED-DESIGNED BY	SCOTT DOWLAN
CHECKED BY	CORBY KILMER
REVISED BY	
DATE REVISED	

STATE OF CALIFORNIA - DEPARTMENT OF TRANSPORTATION
Caltrans LANDSCAPE ARCHITECTURE

LAST REVISION 05-17-10
DATE PLOTTED => 03-AUG-2010
TIME PLOTTED => 09:56

Dist	COUNTY	ROUTE	KILOMETER POST TOTAL PROJECT	SHEET No.	TOTAL SHEETS
05	Mon	101	R146.8/159.7	1042	1402

LICENSED LANDSCAPE ARCHITECT

7-26-10
PLANS APPROVAL DATE

LICENSED LANDSCAPE ARCHITECT SCOTT P. DOWLAN No. 4410 Signature 9/30/10 Renewal Date 05/17/10 Date Signed STATE OF CALIFORNIA

THE STATE OF CALIFORNIA OR ITS OFFICERS OR AGENTS SHALL NOT BE RESPONSIBLE FOR THE ACCURACY OR COMPLETENESS OF SCANNED COPIES OF THIS PLAN SHEET.

Caltrans Metric

NOTES:

1. FOR ACCURATE RIGHT OF WAY AND ACCESS DATA, CONTACT RIGHT OF WAY ENGINEERING AT THE DISTRICT OFFICE.
2. SEE STAGE CONSTRUCTION PLANS (STAGE 2 PHASE 3).

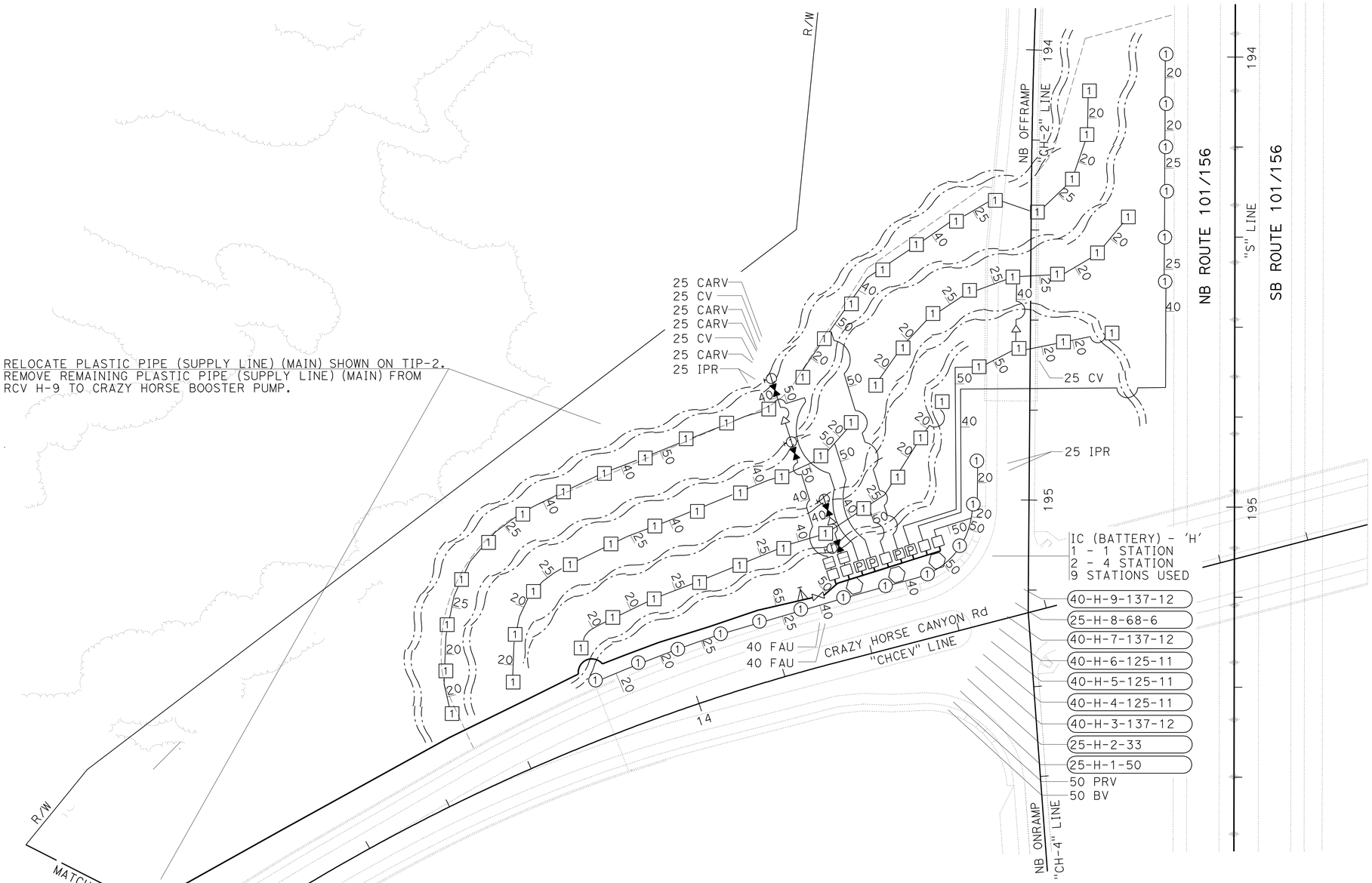

ALL DIMENSIONS ARE IN MILLIMETERS
(DIAMETER NOMINAL) UNLESS OTHERWISE SHOWN.

TEMPORARY IRRIGATION PLAN

THIS PLAN ACCURATE FOR TEMPORARY IRRIGATION WORK ONLY.

SCALE 1:500 **TIP-6**

STATE OF CALIFORNIA - DEPARTMENT OF TRANSPORTATION
Caltrans LANDSCAPE ARCHITECTURE

SENIOR LANDSCAPE ARCHITECT: DENNIS REEVES
CALCULATED-DESIGNED BY: SCOTT DOWLAN
CHECKED BY: CORBY KILMER
REVISED BY / DATE REVISED

LAST REVISION 05-17-10 | DATE PLOTTED => 03-AUG-2010 | TIME PLOTTED => 09:56

Dist	COUNTY	ROUTE	KILOMETER POST TOTAL PROJECT	SHEET No.	TOTAL SHEETS
05	Mon	101	R146.8/159.7	1043	1402

LICENSED LANDSCAPE ARCHITECT

7-26-10
PLANS APPROVAL DATE

LICENSED LANDSCAPE ARCHITECT SCOTT P. DOWLAN No. 4461 Signature 9/30/10 Renewal Date 05/17/10 Date Signed STATE OF CALIFORNIA

THE STATE OF CALIFORNIA OR ITS OFFICERS OR AGENTS SHALL NOT BE RESPONSIBLE FOR THE ACCURACY OR COMPLETENESS OF SCANNED COPIES OF THIS PLAN SHEET.

Caltrans Metric

NOTES:

1. PLASTIC PIPE(SUPPLY LINE) MUST BE INSTALLED ON GRADE.
2. SEE ECD SHEETS FOR ADDITIONAL DETAILS.

SPRINKLER SCHEDULE (TEMPORARY IRRIGATION)

SYMBOL	TYPE	DESCRIPTION	SPRAY PATTERN	OPERATING PRESSURE (KILOPASCAL) (kPa)	PRESSURE COMPENSATING	PLUS / MINUS 5% DISCHARGE: LITERS PER SECOND L/sec	LITERS PER MINUTE L/min	LITERS PER HOUR L/h	RADIUS (IN METERS)(m)	WIDTH x LENGTH (IN METERS)(m)	MATERIAL	NOZZLE SIZE IN MILLIMETERS (mm)	INLET CONNECTION (NPT) (DN IN MILLIMETERS)(mm)	POSITIVE-LOCKING ADJ ARC STOP	BACKSPLASH PREVENTER	DIFFUSER PIN	DISTANCE CONTROL FLAP	ADJ DISCHARGE	RISER: TYPE	RISER MATERIAL: PLASTIC	RISER MATERIAL: GALVANIZED	RISER: SIZE (IPS) (IN MILLIMETERS)(mm)	RISER: HEIGHT (IN MILLIMETERS)(mm)	RISER: FLOW SHUTOFF DEVICE	SWING JOINT (TYPE)	RISER SUPPORT	SPRINKLER PROTECTOR (TYPE)	REMARKS
1	A-1	SIDE IMPACT	H	172	-	-	11.4	-	11	-	PL	8	15	X	X	X	-	-	4	X	-	15	4	-	-	4	-	3
[1]	A-1	SIDE IMPACT	F	172	-	-	11.4	-	11	-	PL	8	15	-	-	X	-	-	4	X	-	15	4	-	-	4	-	3
	-	PLASTIC DRIP TAPE(IRRIGATION LINE)	-	69	-	-	-	0.95	-	-	PL	-	-	-	-	-	-	-	-	-	-	-	-	-	-	-	-	1 3

X IN BOX DENOTES REQUIREMENT

APPLICABLE WHEN CIRCLED BELOW:

1 - See Special Provisions.
2 - Arc Stop shall be fitted with a nut and bolt.
3 - See ECD sheets for additional details.
4 - Refer to Riser Detail on TID sheets.

ABBREVIATIONS

ADJ — adjustable
B/B — brass/bronze
B/B/PL — brass/bronze/plastic
B/PL — brass/plastic
CST — center strip
DN — diameter nominal
EST — end strip
F — full circle
F/P — full/part circle
H — half circle
IPS — iron pipe size
kPa — kilopascal
L/h — liters per hour
L/min — liters per minute
L/sec — liters per second
m — meters
mm — millimeters
NPT — national pipe thread
P — part circle
PL — plastic
Q — quarter circle
SST — side strip
T — third circle
TQ — three quarter circle
TT — two third circle

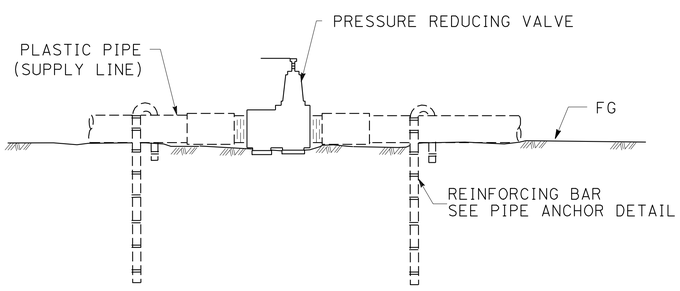

ELEVATION
PRESSURE REDUCING VALVE

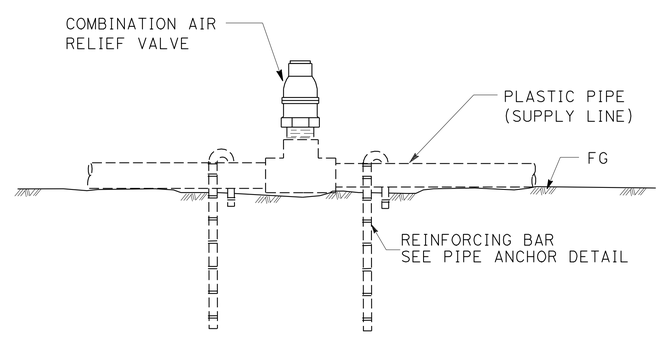

ELEVATION
COMBINATION AIR RELIEF VALVE

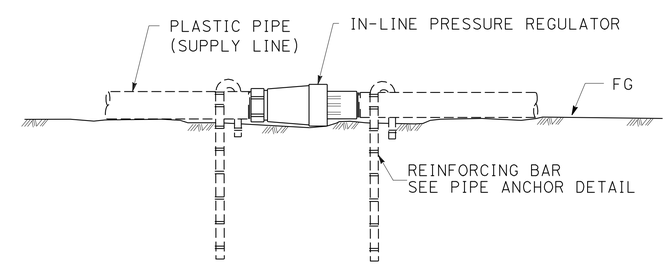

ELEVATION
IN-LINE PRESSURE REGULATOR

ALL DIMENSIONS ARE IN MILLIMETERS
(DIAMETER NOMINAL) UNLESS OTHERWISE SHOWN.

TEMPORARY IRRIGATION DETAILS

NO SCALE

TID-1

STATE OF CALIFORNIA - DEPARTMENT OF TRANSPORTATION
Caltrans LANDSCAPE ARCHITECTURE

SENIOR LANDSCAPE ARCHITECT: DENNIS REEVES
CALCULATED-DESIGNED BY: SCOTT DOWLAN
CHECKED BY: CORBY KILMER
REVISED BY / DATE REVISED

LAST REVISION 05-17-10 | DATE PLOTTED => 03-AUG-2010 | TIME PLOTTED => 09:57

Dist	COUNTY	ROUTE	KILOMETER POST TOTAL PROJECT	SHEET No.	TOTAL SHEETS
05	Mon	101	R146.8/159.7	1044	1402

Caltrans Metric

LICENSED LANDSCAPE ARCHITECT

7-26-10
PLANS APPROVAL DATE

LICENSED LANDSCAPE ARCHITECT SCOTT P. DOWLAN No. 4410 Signature 9/30/10 Renewal Date 05/17/10 Date Signed STATE OF CALIFORNIA

THE STATE OF CALIFORNIA OR ITS OFFICERS OR AGENTS SHALL NOT BE RESPONSIBLE FOR THE ACCURACY OR COMPLETENESS OF SCANNED COPIES OF THIS PLAN SHEET.

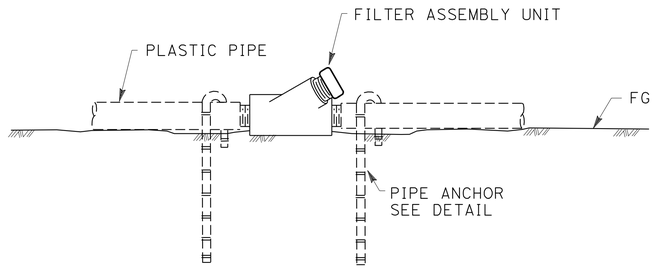

SECTION
FILTER ASSEMBLY UNIT

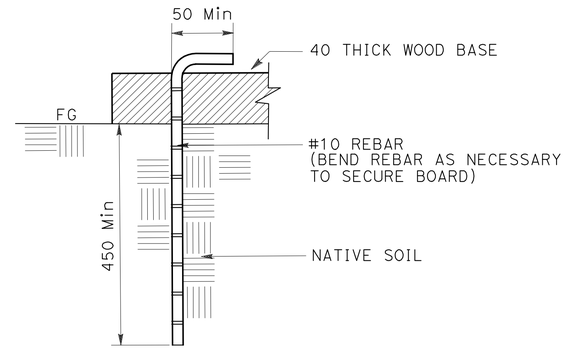

SECTION
BOARD ANCHOR

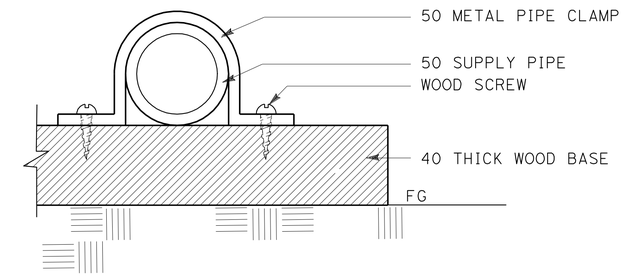

SECTION
PIPE CLAMP

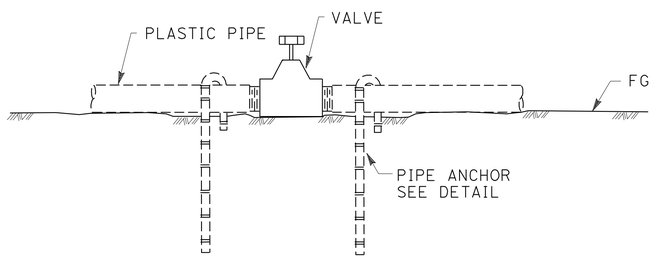

ELEVATION
GATE VALVE/BALL VALVE

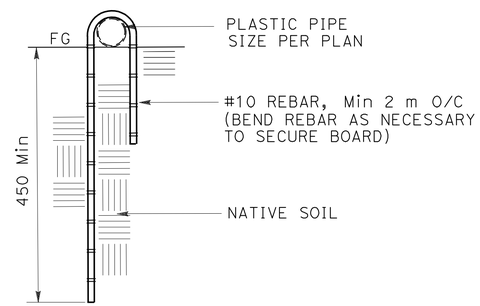

SECTION
PIPE ANCHOR

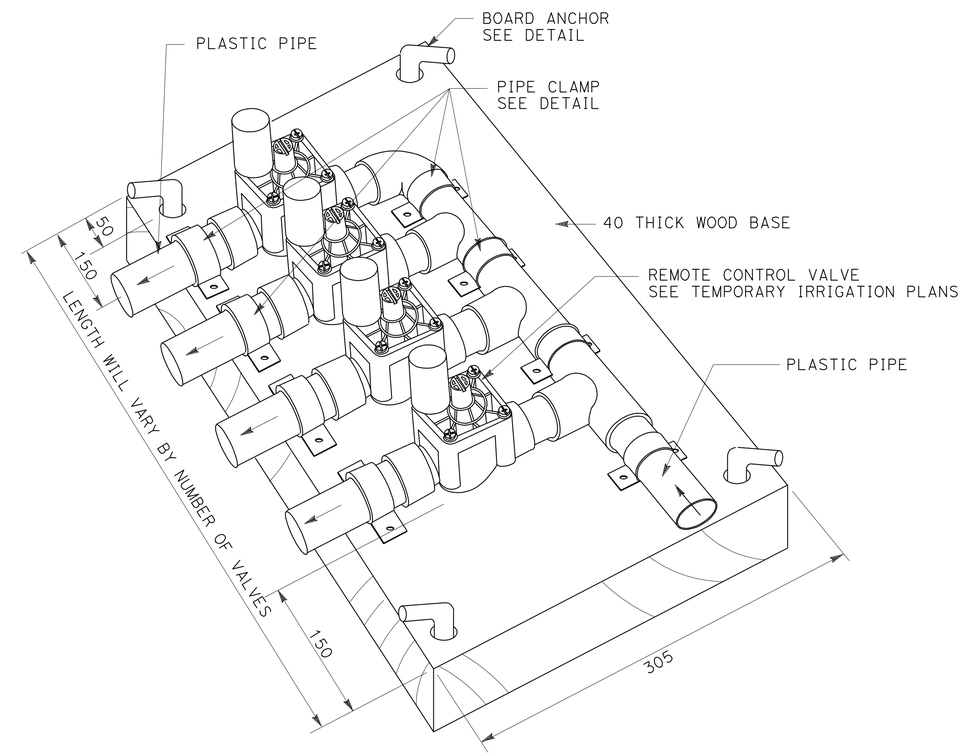

VALVE ASSEMBLY BOARD

ALL DIMENSIONS ARE IN MILLIMETERS
(DIAMETER NOMINAL) UNLESS OTHERWISE SHOWN.

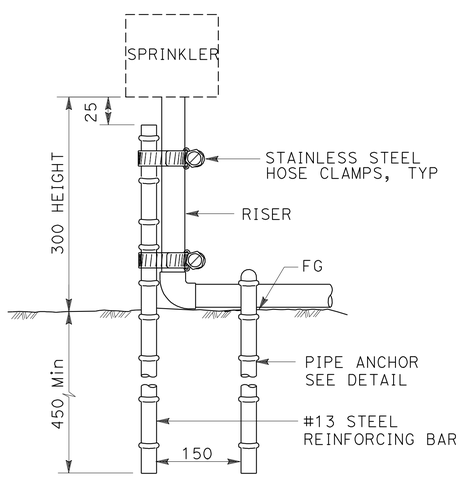

ELEVATION
RISER DETAIL

TEMPORARY IRRIGATION DETAILS

NO SCALE

TID-2

SCOTT DOWLAN	CORBY KILMER	REVISED BY / DATE REVISED
CALCULATED-DESIGNED BY	CHECKED BY	
SENIOR LANDSCAPE ARCHITECT	DENNIS REEVES	

STATE OF CALIFORNIA - DEPARTMENT OF TRANSPORTATION
Caltrans LANDSCAPE ARCHITECTURE

LAST REVISION 05-17-10 | DATE PLOTTED => 03-AUG-2010 | TIME PLOTTED => 09:57

Dist	COUNTY	ROUTE	KILOMETER POST TOTAL PROJECT	SHEET No.	TOTAL SHEETS
05	Mon	101	R146.8/159.7	1045	1402

LICENSED LANDSCAPE ARCHITECT

7-26-10
PLANS APPROVAL DATE

LICENSED LANDSCAPE ARCHITECT SCOTT P. DOWLAN No. 4401 Signature 9/30/10 Renewal Date 5/17/10 Date Signed STATE OF CALIFORNIA

THE STATE OF CALIFORNIA OR ITS OFFICERS OR AGENTS SHALL NOT BE RESPONSIBLE FOR THE ACCURACY OR COMPLETENESS OF SCANNED COPIES OF THIS PLAN SHEET.

Caltrans Metric

LEGEND

- (C-X) CONSTRUCTION DETAILS (IRRIGATION)
- [TIP-X] TEMPORARY IRRIGATION PLANS
- [IR-X] IRRIGATION REMOVAL PLANS
- (IP-X) IRRIGATION PLANS
- (PP-X) PLANTING PLANS
- (PI-X) PLANTING AND IRRIGATION PLANS

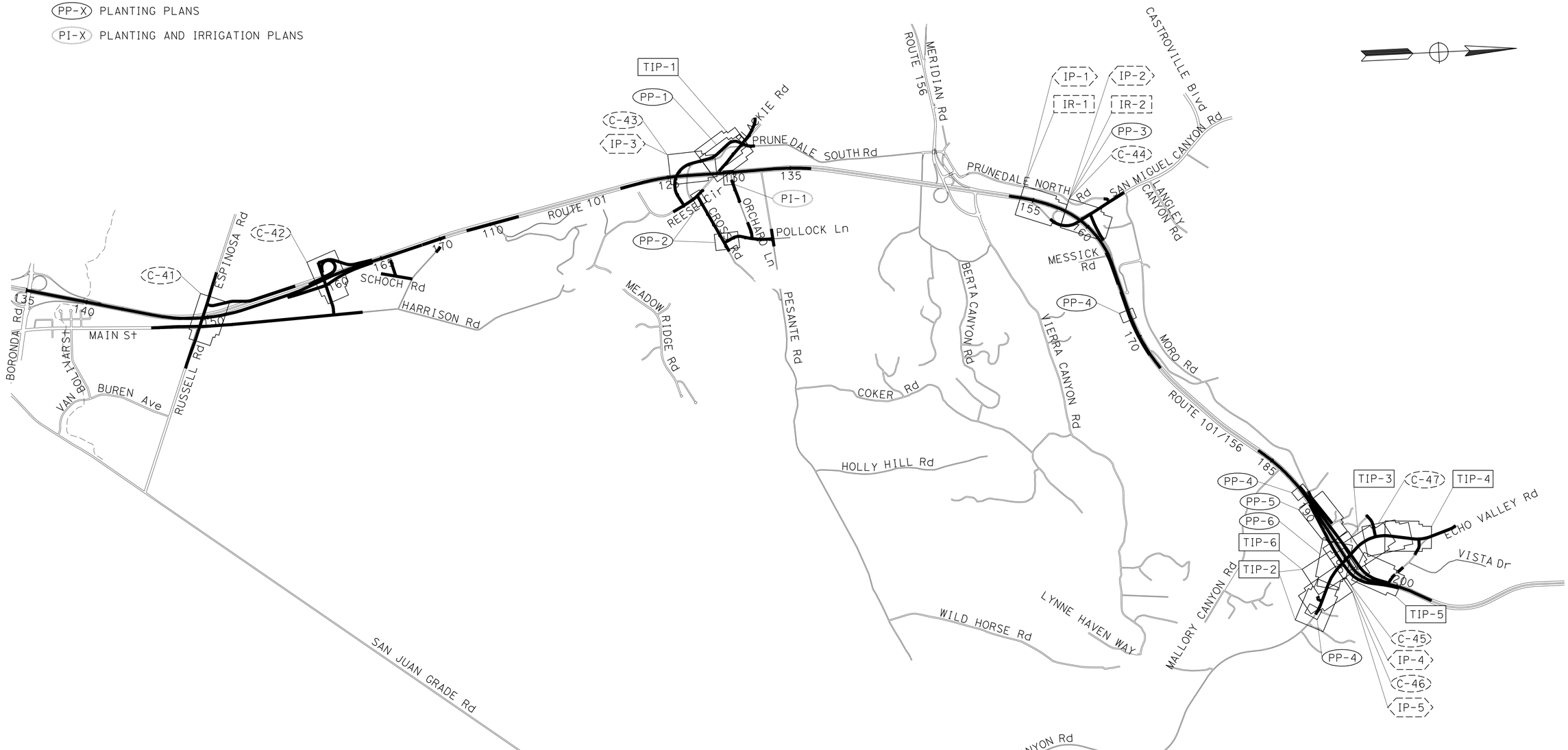

PLANTING AND IRRIGATION KEY MAP

NO SCALE **PIK-1**

SENIOR LANDSCAPE ARCHITECT	DENNIS REEVES	
CALCULATED-DESIGNED BY	SCOTT DOWLAN	REVISED BY
CHECKED BY	CORBY KILMER	DATE REVISED

STATE OF CALIFORNIA - DEPARTMENT OF TRANSPORTATION
Caltrans LANDSAPE ARCHITECTURE

LAST REVISION 05-17-10 | DATE PLOTTED => 03-AUG-2010 | TIME PLOTTED => 09:57

Dist	COUNTY	ROUTE	KILOMETER POST TOTAL PROJECT	SHEET No.	TOTAL SHEETS
05	Mon	101	R146.8/159.7	1046	1402

LICENSED LANDSCAPE ARCHITECT

7-26-10
PLANS APPROVAL DATE

LICENSED LANDSCAPE ARCHITECT SCOTT P. DOWLAN No. 4410 Signature 9/30/10 Renewal Date 05/17/10 Date Signed STATE OF CALIFORNIA

THE STATE OF CALIFORNIA OR ITS OFFICERS OR AGENTS SHALL NOT BE RESPONSIBLE FOR THE ACCURACY OR COMPLETENESS OF SCANNED COPIES OF THIS PLAN SHEET.

Caltrans Metric

ABBREVIATIONS

DIA — DIAMETER
g — GRAM
Kg — KILOGRAM
m — METER
m^2 — SQUARE METER
m^3 — CUBIC METER
MAX — MAXIMUM
MIN — MINIMUM
mm — MILLIMETER
PVMT — PAVEMENT

PLANT LIST AND PLANTING SPECIFICATIONS

PLANT GROUP	PLANT No	SYMBOL	BOTANICAL NAME	COMMON NAME	SIZE	QUANTITY EACH	HOLE SIZE (mm) DIA	HOLE SIZE (mm) DEPTH	BASIN TYPE	IRON SULFATE	SOIL AMEND	COMMERCIAL FERTILIZER ① PLANTING	COMMERCIAL FERTILIZER ① PLT ESTB	BASIN MULCH ①	STAKING	PLANTING LIMITS MINIMUM DISTANCE (m) FROM TRVD WAY	PVMT	FENCE	WALL	PAVED DITCH	EARTH DITCH	ON CENTER (m)	REMARKS
A	1		CEANOTHUS 'DARK STAR'	CEANOTHUS	No. 1	40	②		II	-	-	1 Pkt	85 g	0.06 m^3	-	-	2	-	-	2	2	③	SHRUB ⑤ ⑥
	2		HETEROMELES ARBUTIFOLIA	TOYON	No. 1	13	②		II	-	-	1 Pkt	85 g	0.06 m^3	-	-	2	-	-	2	2	③	SHRUB ⑤ ⑥
	3		PARTHENOCISSUS TRICUSPIDATA	BOSTON IVY	No. 1	22	②		II	-	-	1 Pkt	85 g	0.06 m^3	-	-	-	-	-	2	2	③	VINE ⑤ ⑥
	4		RHAMNUS CALIFORNICA 'EVE CASE'	COFFEEBERRY	No. 1	18	②		II	-	-	1 Pkt	85 g	0.06 m^3	-	-	2	-	-	2	2	③	SHRUB ⑤ ⑥
	5		QUERCUS AGRIFOLIA	COAST LIVE OAK	No. 1	8	②		II	-	-	1 Pkt	85 g	0.06 m^3	-	9	3	-	-	3	3	③	TREE ⑤ ⑥
M	6		ELEOCHARIS MACROSTACHYA	COMMON SPIKERUSH	LINER ⑦	101	④		-	-	-	-	-	-	-	-	-	-	-	-	-	2	PERENNIAL HERB ⑩
	7		JUNCUS EFFUSUS	GREEN-ROUNDED LEAVED RUSH	LINER ⑦	151	④		-	-	-	-	-	-	-	-	-	-	-	-	-	2	PERENNIAL HERB ⑩
	8		JUNCUS OCCIDENTALIS	WESTERN RUSH	LINER ⑦	151	④		-	-	-	-	-	-	-	-	-	-	-	-	-	2	PERENNIAL HERB ⑩
	9		SCIRPUS CERNUUS	FIBEROPTIC GRASS	LINER ⑦	302	④		-	-	-	-	-	-	-	-	-	-	-	-	-	2	PERENNIAL HERB ⑩
	10		SCIRPUS MICROCARPUS	SMALL FRUITED BULRUSH	LINER ⑦	302	④		-	-	-	-	-	-	-	-	-	-	-	-	-	2	PERENNIAL HERB ⑩
U	11		PLATANUS RACEMOSA	CALIFORNIA SYCAMORE	No. 15	19	②		II	-	-	9 Pkt	225 g	0.09 m^3	⑧	9	-	-	3	4	2	③	TREE ⑤
	12		POPULUS TRICHOCARPUS	BLACK COTTONWOOD	No. 15	95	②		II	-	-	9 Pkt	225 g	0.09 m^3	⑧	9	-	-	3	4	2	③	TREE ⑤
	13		SEQUOIA SEMPERVIRENS	COAST REDWOOD	No. 15	23	②		II	-	-	9 Pkt	225 g	0.09 m^3	⑧	9	-	-	3	4	2	7	TREE ⑤
	14		QUERCUS AGRIFOLIA	COAST LIVE OAK	No. 15	8	②		II	-	-	9 Pkt	225 g	0.09 m^3	⑧	-	2	-	-	4	2	③	TREE ⑤
WC	15		SALIX LUCIDA	PACIFIC WILLOW	CUTTING	2139	⑦		-	-	-	⑦	-	-	-	-	-	-	-	-	-	3	TREE/SHRUB
WP	16		SALIX LUCIDA	PACIFIC WILLOW	POLE	198	⑦		-	-	-	⑦	-	-	-	-	-	-	-	-	-	2	TREE/SHRUB
WB	17		SALIX LUCIDA	PACIFIC WILLOW	BRANCH	1924	⑦		-	-	-	⑦	-	-	-	-	-	-	-	-	-	⑦	TREE/SHRUB ⑨

LEGEND:

- EXISTING PLANTING
- MULCH (75 mm THICK)
- LIVE SILTATION, SEE Q AND LD SHEETS
- BRUSH LAYERING, SEE Q AND LD SHEETS
- WILLOW POLES IN RSP, SEE LD SHEET
- ROCK SLOPE PROTECTION, SEE D SHEETS
- ESA — ENVIRONMENTALLY SENSITIVE AREA
- TEMPORARY FENCE (TYPE ESA)

APPLICABLE WHEN CIRCLED:

① - QUANTITIES SHOWN ARE "PER PLANT" UNLESS SHOWN AS m^2 APPLICATION RATES.
② - SUFFICIENT TO RECEIVE ROOT BALL AND ROOT PROTECTOR.
③ - AS SHOWN ON PLANS.
④ - SUFFICIENT TO RECEIVE ROOT BALL.
⑤ - ROOT PROTECTORS REQUIRED.
⑥ - FOLIAGE PROTECTORS REQUIRED.
⑦ - SEE SPECIAL PROVISIONS.
⑧ - REQUIRED.
⑨ - SEE SPECIAL PROVISION "LIVE SILTATION" AND "BRUSH LAYERING" FOR BRANCH CUTTINGS.
⑩ - PLANT IN RANDOM GROUPINGS.

NOTE:

UNDERLINED PORTIONS OF BOTANICAL NAME INDICATE ABBREVIATIONS USED ON PLANTING PLANS.

PLANT LIST
PL-1

REVISED BY | DATE REVISED
SCOTT DOWLAN | CORBY KILMER
CALCULATED-DESIGNED BY | CHECKED BY
SENIOR LANDSCAPE ARCHITECT | DENNIS REEVES

STATE OF CALIFORNIA - DEPARTMENT OF TRANSPORTATION
Caltrans LANDSCAPE ARCHITECTURE

LAST REVISION 05-17-10 | DATE PLOTTED => 03-AUG-2010 | TIME PLOTTED => 12:43

Dist	COUNTY	ROUTE	KILOMETER POST TOTAL PROJECT	SHEET No.	TOTAL SHEETS
05	Mon	101	R146.8/159.7	1047	1402

LICENSED LANDSCAPE ARCHITECT

7-26-10
PLANS APPROVAL DATE

LICENSED LANDSCAPE ARCHITECT SCOTT P. DOWLAN No. 4461 Signature 9/30/10 Renewal Date 05/17/10 Date Signed STATE OF CALIFORNIA

THE STATE OF CALIFORNIA OR ITS OFFICERS OR AGENTS SHALL NOT BE RESPONSIBLE FOR THE ACCURACY OR COMPLETENESS OF SCANNED COPIES OF THIS PLAN SHEET.

Caltrans Metric

NOTE:

FOR ACCURATE RIGHT OF WAY AND ACCESS DATA,
CONTACT RIGHT OF WAY ENGINEERING AT THE DISTRICT OFFICE.

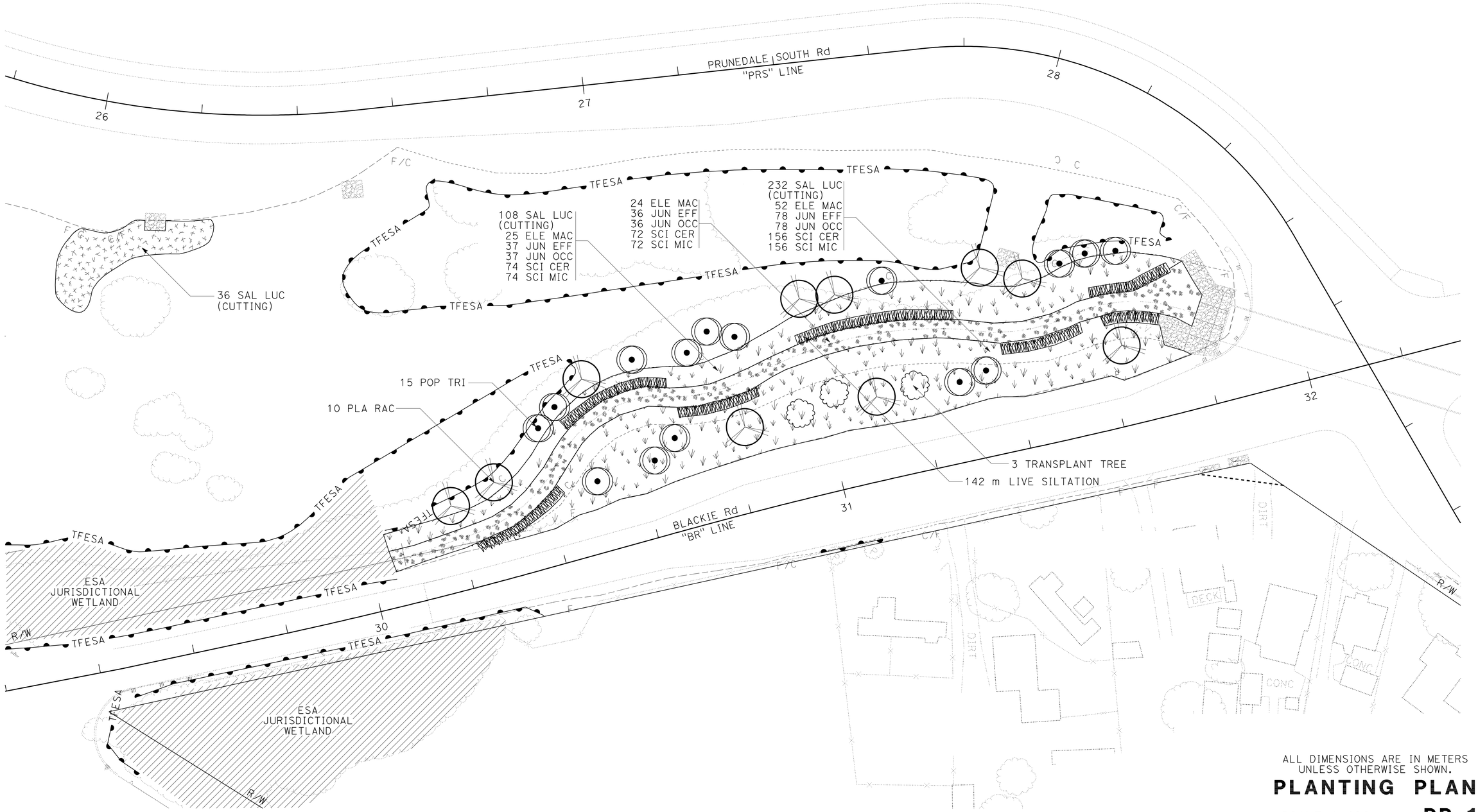

ALL DIMENSIONS ARE IN METERS
UNLESS OTHERWISE SHOWN.

PLANTING PLAN

SCALE 1:400

PP-1

THIS PLAN ACCURATE FOR PLANTING WORK ONLY.

STATE OF CALIFORNIA - DEPARTMENT OF TRANSPORTATION
Caltrans LANDSCAPE ARCHITECTURE

SENIOR LANDSCAPE ARCHITECT: DENNIS REEVES
CALCULATED-DESIGNED BY: SCOTT DOWLAN
CHECKED BY: CORBY KILMER
REVISED BY
DATE REVISED

LAST REVISION 05-17-10
DATE PLOTTED => 03-AUG-2010
TIME PLOTTED => 12:56

Dist	COUNTY	ROUTE	KILOMETER POST TOTAL PROJECT	SHEET No.	TOTAL SHEETS
05	Mon	101	R146.8/159.7	1048	1402

LICENSED LANDSCAPE ARCHITECT

7-26-10
PLANS APPROVAL DATE

LICENSED LANDSCAPE ARCHITECT
SCOTT P. DOWLAN No. 4410
Signature
9/30/10
Renewal Date
05/17/10
Date Signed
STATE OF CALIFORNIA

THE STATE OF CALIFORNIA OR ITS OFFICERS OR AGENTS SHALL NOT BE RESPONSIBLE FOR THE ACCURACY OR COMPLETENESS OF SCANNED COPIES OF THIS PLAN SHEET.

Caltrans Metric

NOTE:
FOR ACCURATE RIGHT OF WAY AND ACCESS DATA,
CONTACT RIGHT OF WAY ENGINEERING AT THE DISTRICT OFFICE.

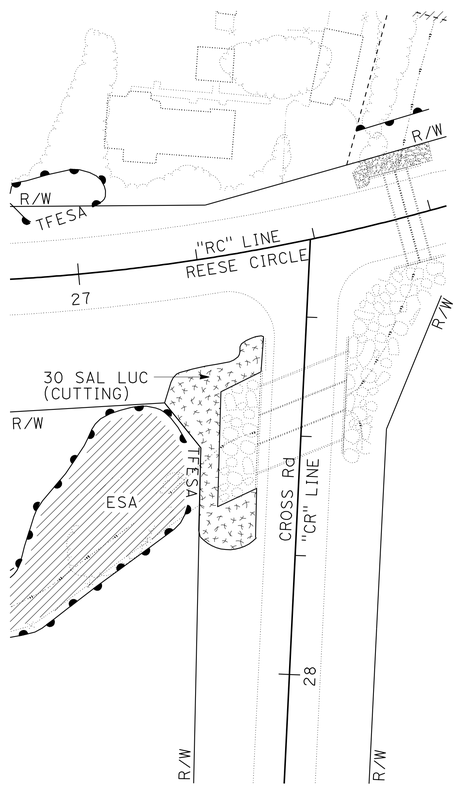

CROSS Rd, Sta 27+55

CROSS Rd AT REESE CIRCLE

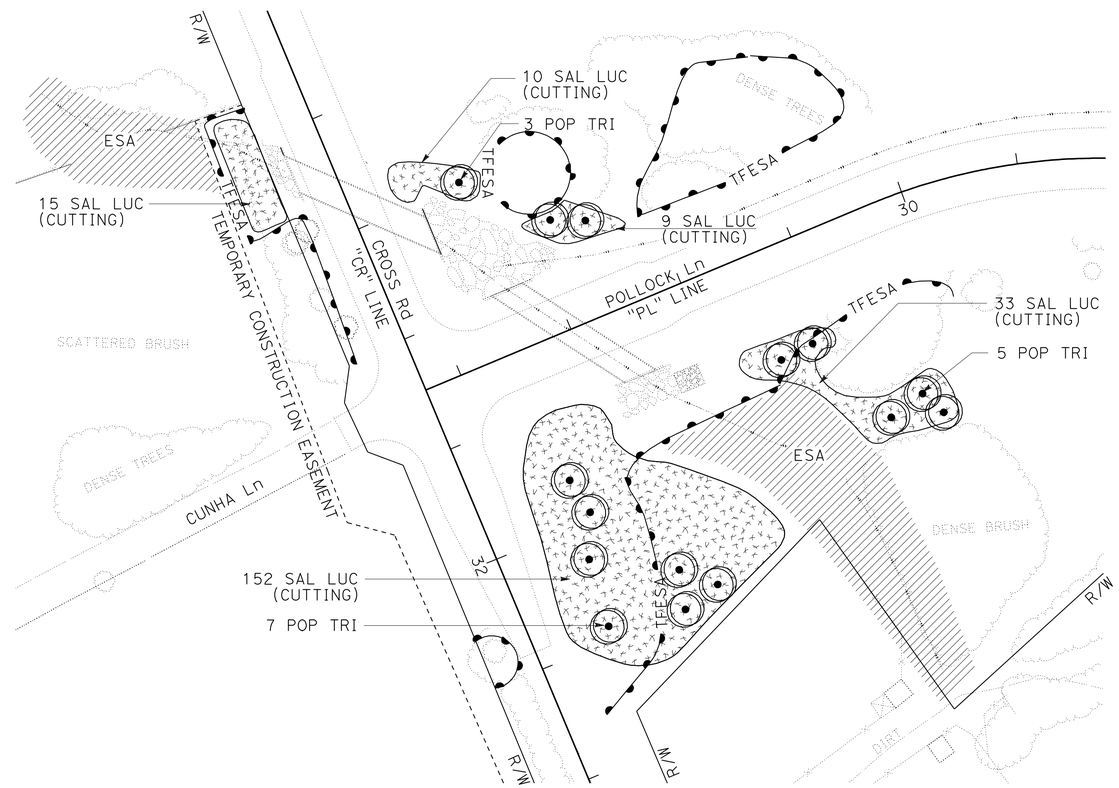

CROSS Rd, Sta 31+15 TO Sta 32+30

CROSS Rd AT POLLOCK LANE

ALL DIMENSIONS ARE IN METERS
UNLESS OTHERWISE SHOWN.

PLANTING PLAN

SCALE 1:500 **PP-2**

THIS PLAN ACCURATE FOR PLANTING WORK ONLY.

STATE OF CALIFORNIA - DEPARTMENT OF TRANSPORTATION
Caltrans LANDSCAPE ARCHITECTURE

SENIOR LANDSCAPE ARCHITECT: DENNIS REEVES
CALCULATED-DESIGNED BY: SCOTT DOWLAN
CHECKED BY: CORBY KILMER
REVISED BY
DATE REVISED

LAST REVISION 05-17-10
DATE PLOTTED => 03-AUG-2010
TIME PLOTTED => 11:33

Dist	COUNTY	ROUTE	KILOMETER POST TOTAL PROJECT	SHEET No.	TOTAL SHEETS
05	Mon	101	R146.8/159.7	1049	1402

LICENSED LANDSCAPE ARCHITECT

7-26-10
PLANS APPROVAL DATE

LICENSED LANDSCAPE ARCHITECT SCOTT P. DOWLAN No. 4410 Signature 9/30/10 Renewal Date 05/11/10 Date Signed STATE OF CALIFORNIA

THE STATE OF CALIFORNIA OR ITS OFFICERS OR AGENTS SHALL NOT BE RESPONSIBLE FOR THE ACCURACY OR COMPLETENESS OF SCANNED COPIES OF THIS PLAN SHEET.

Caltrans Metric

NOTE:

FOR ACCURATE RIGHT OF WAY AND ACCESS DATA,
CONTACT RIGHT OF WAY ENGINEERING AT THE DISTRICT OFFICE.

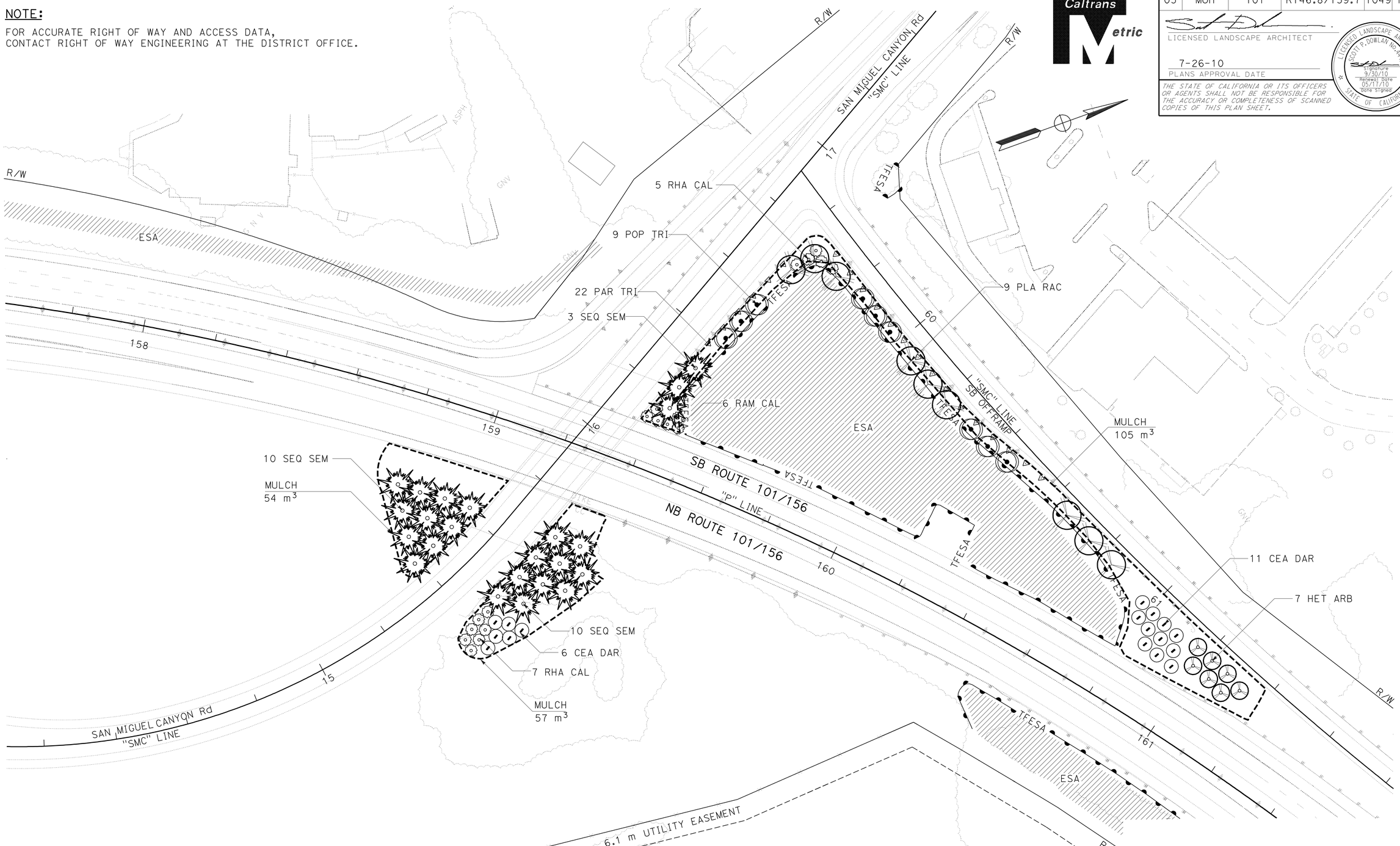

ALL DIMENSIONS ARE IN METERS
UNLESS OTHERWISE SHOWN.

PLANTING PLAN

SCALE 1:500 **PP-3**

THIS PLAN ACCURATE FOR PLANTING WORK ONLY.

STATE OF CALIFORNIA - DEPARTMENT OF TRANSPORTATION
Caltrans LANDSCAPE ARCHITECTURE

SENIOR LANDSCAPE ARCHITECT: DENNIS REEVES
CALCULATED-DESIGNED BY: SCOTT DOWLAN
CHECKED BY: CORBY KILMER
REVISED BY
DATE REVISED

LAST REVISION 05-17-10
DATE PLOTTED => 03-AUG-2010
TIME PLOTTED => 11:33

Dist	COUNTY	ROUTE	KILOMETER POST TOTAL PROJECT	SHEET No.	TOTAL SHEETS
05	Mon	101	R146.8/159.7	1050	1402

LICENSED LANDSCAPE ARCHITECT

7-26-10
PLANS APPROVAL DATE

LICENSED LANDSCAPE ARCHITECT
SCOTT P. DOWLAN No. 4410
Signature
9/30/10
Renewal Date
05/17/10
Date Signed
STATE OF CALIFORNIA

THE STATE OF CALIFORNIA OR ITS OFFICERS OR AGENTS SHALL NOT BE RESPONSIBLE FOR THE ACCURACY OR COMPLETENESS OF SCANNED COPIES OF THIS PLAN SHEET.

Caltrans Metric

NOTE:

FOR ACCURATE RIGHT OF WAY AND ACCESS DATA,
CONTACT RIGHT OF WAY ENGINEERING AT THE DISTRICT OFFICE.

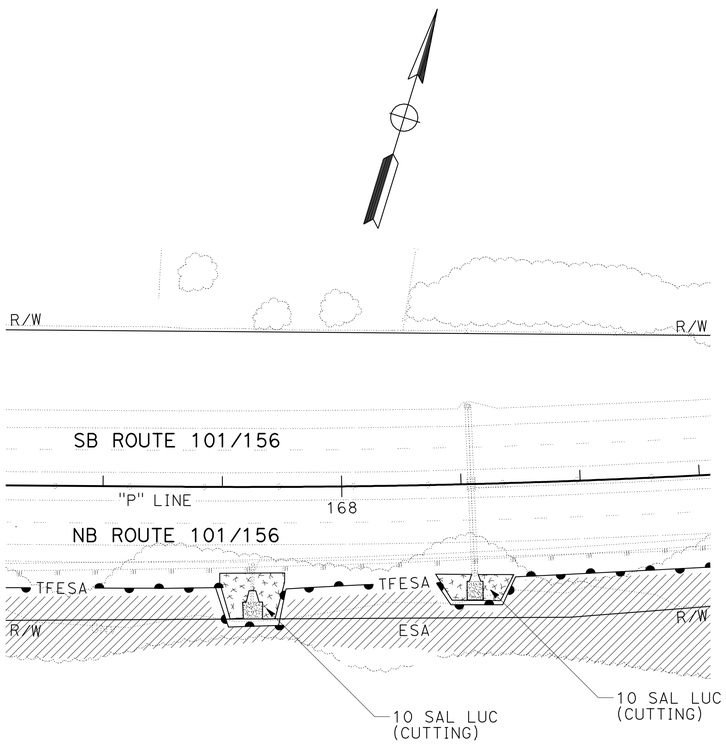

ROUTE 101/156, Sta 27+55

DRAINAGE FACILTIES

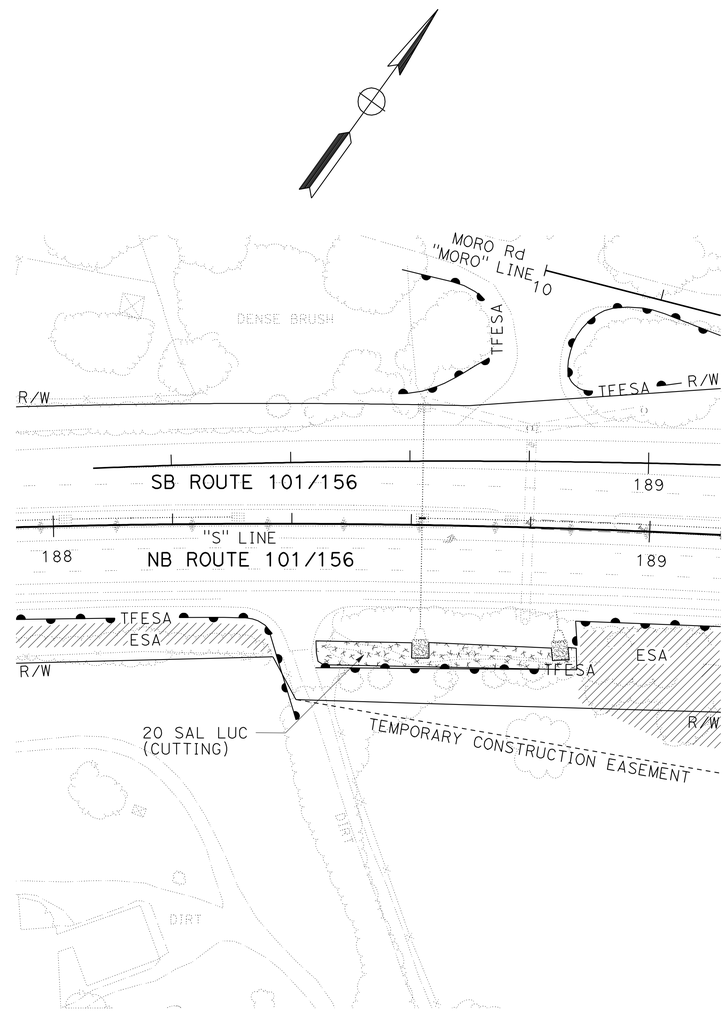

ROUTE 101/156, Sta 188+50

PRIVATE DRIVEWAY

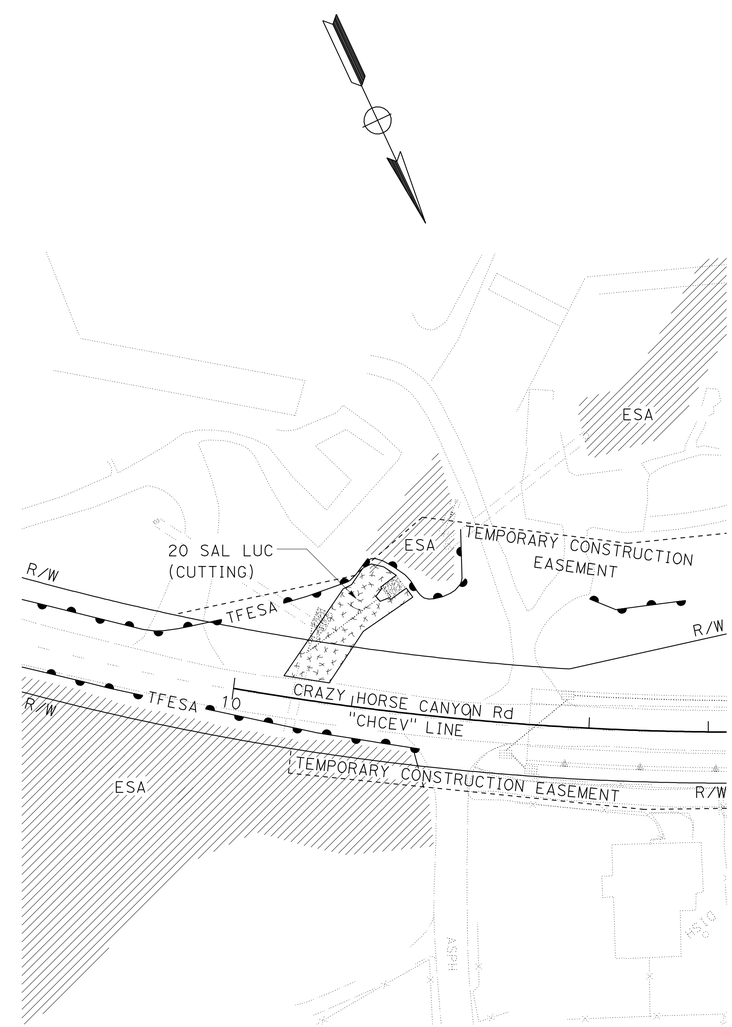

CRAZY HORSE CANYON Rd, Sta 10+15

DRAINAGE SWALE

ALL DIMENSIONS ARE IN METERS
UNLESS OTHERWISE SHOWN.

PLANTING PLAN

SCALE 1:500 **PP-4**

THIS PLAN ACCURATE FOR PLANTING WORK ONLY.

REVISED BY | DATE REVISED

SCOTT DOWLAN | CORBY KILMER

CALCULATED-DESIGNED BY | CHECKED BY

SENIOR LANDSCAPE ARCHITECT | DENNIS REEVES

STATE OF CALIFORNIA - DEPARTMENT OF TRANSPORTATION
Caltrans LANDSCAPE ARCHITECTURE

LAST REVISION 05-17-10 | DATE PLOTTED => 03-AUG-2010 | TIME PLOTTED => 11:33

Dist	COUNTY	ROUTE	KILOMETER POST TOTAL PROJECT	SHEET No.	TOTAL SHEETS
05	Mon	101	R146.8/159.7	1051	1402

LICENSED LANDSCAPE ARCHITECT

7-26-10
PLANS APPROVAL DATE

LICENSED LANDSCAPE ARCHITECT SCOTT P. DOWLAN No. 4410 Signature 9/30/10 Renewal Date 05/17/10 Date Signed STATE OF CALIFORNIA

THE STATE OF CALIFORNIA OR ITS OFFICERS OR AGENTS SHALL NOT BE RESPONSIBLE FOR THE ACCURACY OR COMPLETENESS OF SCANNED COPIES OF THIS PLAN SHEET.

Caltrans Metric

NOTE:

FOR ACCURATE RIGHT OF WAY AND ACCESS DATA,
CONTACT RIGHT OF WAY ENGINEERING AT THE DISTRICT OFFICE.

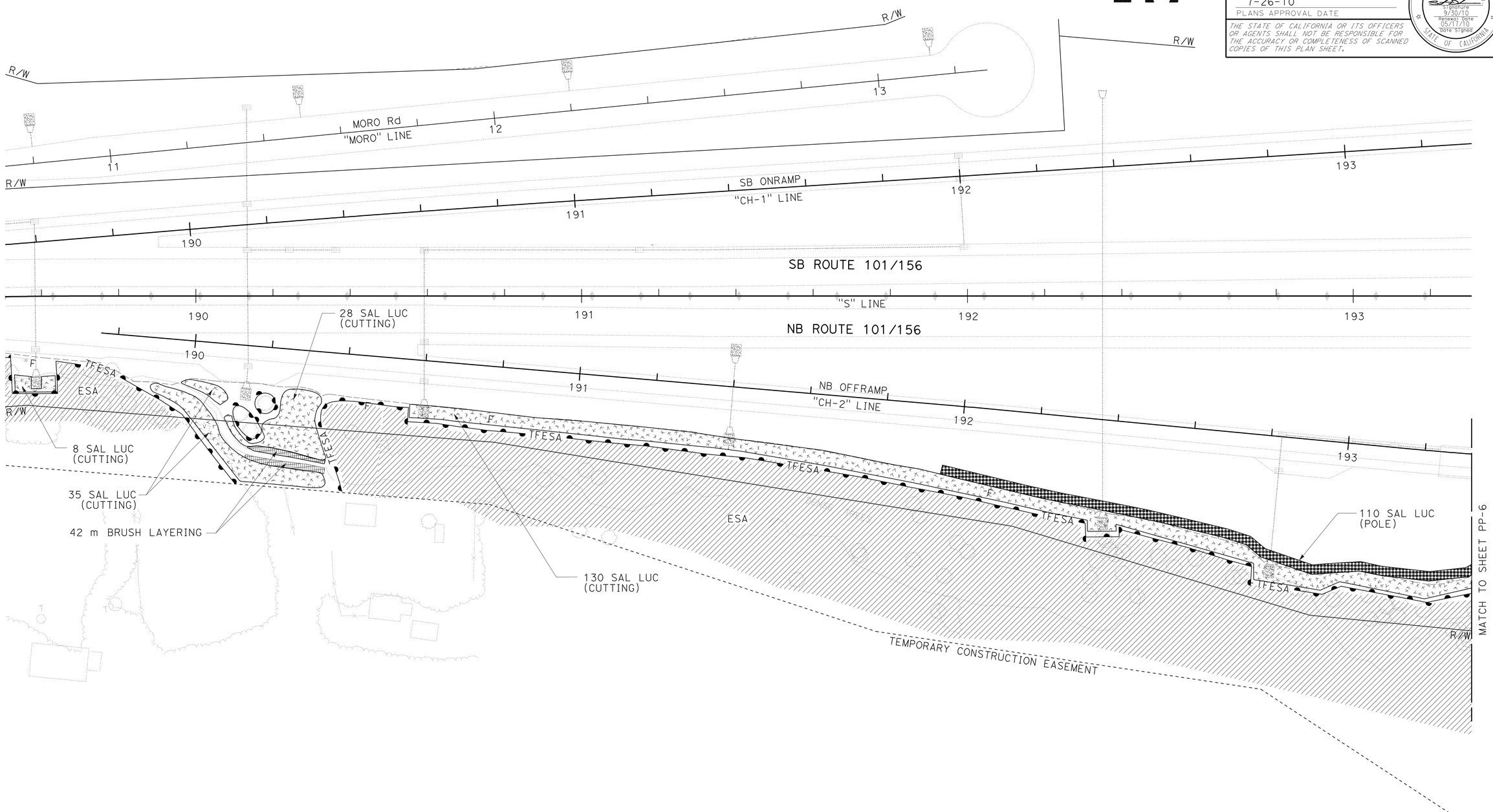

ALL DIMENSIONS ARE IN METERS
UNLESS OTHERWISE SHOWN.

PLANTING PLAN

SCALE 1:500 **PP-5**

THIS PLAN ACCURATE FOR PLANTING WORK ONLY.

REVISED BY | DATE REVISED

SCOTT DOWLAN | CORBY KILMER

CALCULATED-DESIGNED BY | CHECKED BY

SENIOR LANDSCAPE ARCHITECT | DENNIS REEVES

STATE OF CALIFORNIA - DEPARTMENT OF TRANSPORTATION
Caltrans LANDSCAPE ARCHITECTURE

LAST REVISION 05-17-10 | DATE PLOTTED => 03-AUG-2010 | TIME PLOTTED => 12:46

Dist	COUNTY	ROUTE	KILOMETER POST TOTAL PROJECT	SHEET No.	TOTAL SHEETS
05	Mon	101	R146.8/159.7	1052	1402

LICENSED LANDSCAPE ARCHITECT

7-26-10
PLANS APPROVAL DATE

LICENSED LANDSCAPE ARCHITECT
SCOTT P. DOWLAN No. 4410
Signature 9/30/10
Renewal Date 05/17/10
Date Signed
STATE OF CALIFORNIA

THE STATE OF CALIFORNIA OR ITS OFFICERS OR AGENTS SHALL NOT BE RESPONSIBLE FOR THE ACCURACY OR COMPLETENESS OF SCANNED COPIES OF THIS PLAN SHEET.

Caltrans Metric

NOTE:

FOR ACCURATE RIGHT OF WAY AND ACCESS DATA, CONTACT RIGHT OF WAY ENGINEERING AT THE DISTRICT OFFICE.

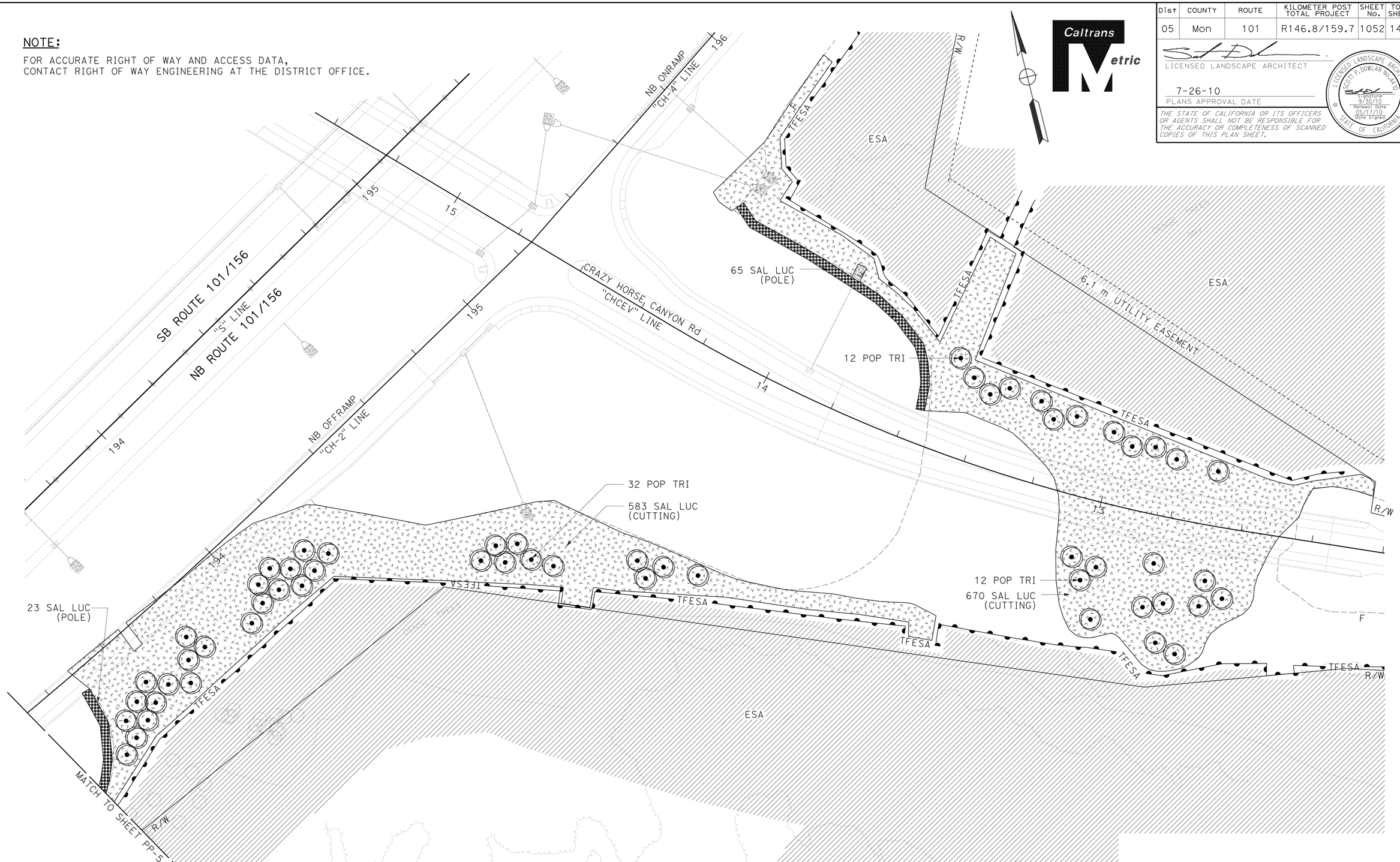

ALL DIMENSIONS ARE IN METERS UNLESS OTHERWISE SHOWN.

PLANTING PLAN

SCALE 1:500

PP-6

THIS PLAN ACCURATE FOR PLANTING WORK ONLY.

STATE OF CALIFORNIA - DEPARTMENT OF TRANSPORTATION
Caltrans LANDSCAPE ARCHITECTURE

SENIOR LANDSCAPE ARCHITECT: DENNIS REEVES
CALCULATED-DESIGNED BY: SCOTT DOWLAN
CHECKED BY: CORBY KILMER
REVISED BY
DATE REVISED

LAST REVISION 05-17-10 | DATE PLOTTED => 03-AUG-2010 | TIME PLOTTED => 12:54

BORDER LAST REVISED 4/11/2008 | RELATIVE BORDER SCALE IS IN MILLIMETERS 0 20 40 60 80 | USERNAME => trstrk | DGN FILE => 50161Eti006.dgn | CU 06341 | EA 0161E1

Dist	COUNTY	ROUTE	KILOMETER POST TOTAL PROJECT	SHEET No.	TOTAL SHEETS
05	Mon	101	R146.8/159.7	1053	1402

LICENSED LANDSCAPE ARCHITECT

7-26-10
PLANS APPROVAL DATE

THE STATE OF CALIFORNIA OR ITS OFFICERS OR AGENTS SHALL NOT BE RESPONSIBLE FOR THE ACCURACY OR COMPLETENESS OF SCANNED COPIES OF THIS PLAN SHEET.

LICENSED LANDSCAPE ARCHITECT SCOTT P. DOWLAN No. 4410 Signature 9/30/10 Renewal Date 05/17/10 Date Signed STATE OF CALIFORNIA

Caltrans Metric

NOTE:

FOR ACCURATE RIGHT OF WAY AND ACCESS DATA,
CONTACT RIGHT OF WAY ENGINEERING AT THE DISTRICT OFFICE.

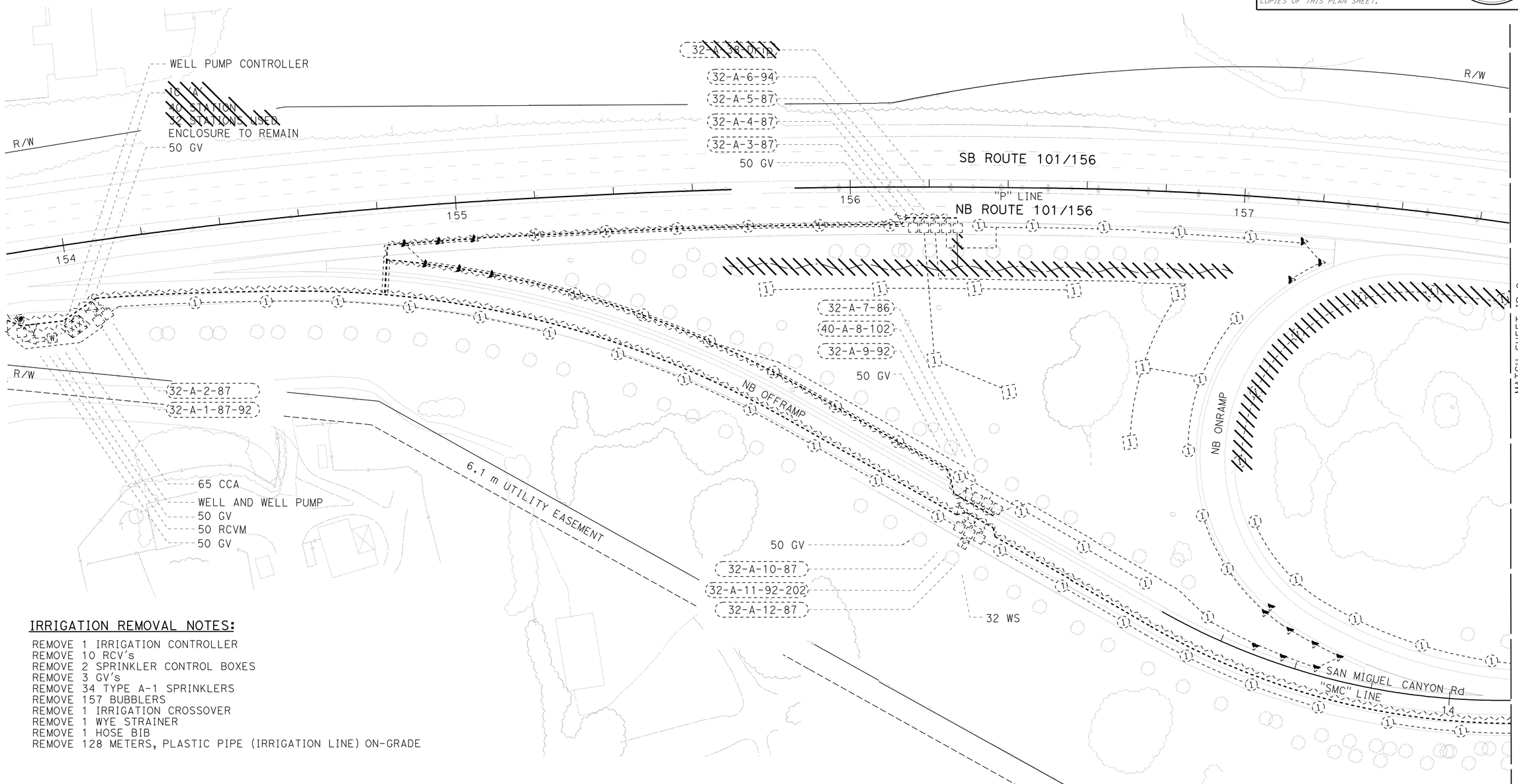

IRRIGATION REMOVAL NOTES:

REMOVE 1 IRRIGATION CONTROLLER
REMOVE 10 RCV's
REMOVE 2 SPRINKLER CONTROL BOXES
REMOVE 3 GV's
REMOVE 34 TYPE A-1 SPRINKLERS
REMOVE 157 BUBBLERS
REMOVE 1 IRRIGATION CROSSOVER
REMOVE 1 WYE STRAINER
REMOVE 1 HOSE BIB
REMOVE 128 METERS, PLASTIC PIPE (IRRIGATION LINE) ON-GRADE

LEGEND:

EXISTING PLANTS

ALL DIMENSIONS ARE IN MILLIMETERS
(DIAMETER NOMINAL) UNLESS OTHERWISE SHOWN.

IRRIGATION REMOVAL PLAN

SCALE 1:500

IR-1

THIS PLAN ACCURATE FOR IRRIGATION REMOVAL WORK ONLY.

STATE OF CALIFORNIA - DEPARTMENT OF TRANSPORTATION
Caltrans LANDSCAPE ARCHITECTURE

SENIOR LANDSCAPE ARCHITECT: DENNIS REEVES
CALCULATED-DESIGNED BY: SCOTT DOWLAN
CHECKED BY: CORBY KILMER
REVISED BY / DATE REVISED

LAST REVISION 05-17-10
DATE PLOTTED => 03-AUG-2010
TIME PLOTTED => 11:34

Dist	COUNTY	ROUTE	KILOMETER POST TOTAL PROJECT	SHEET No.	TOTAL SHEETS
05	Mon	101	R146.8/159.7	1054	1402

LICENSED LANDSCAPE ARCHITECT

7-26-10
PLANS APPROVAL DATE

LICENSED LANDSCAPE ARCHITECT SCOTT P. DOWLAN No. 4910 Signature 9/30/10 Renewal Date 05/17/10 Date Signed STATE OF CALIFORNIA

THE STATE OF CALIFORNIA OR ITS OFFICERS OR AGENTS SHALL NOT BE RESPONSIBLE FOR THE ACCURACY OR COMPLETENESS OF SCANNED COPIES OF THIS PLAN SHEET.

Caltrans Metric

NOTE:

FOR ACCURATE RIGHT OF WAY AND ACCESS DATA,
CONTACT RIGHT OF WAY ENGINEERING AT THE DISTRICT OFFICE.

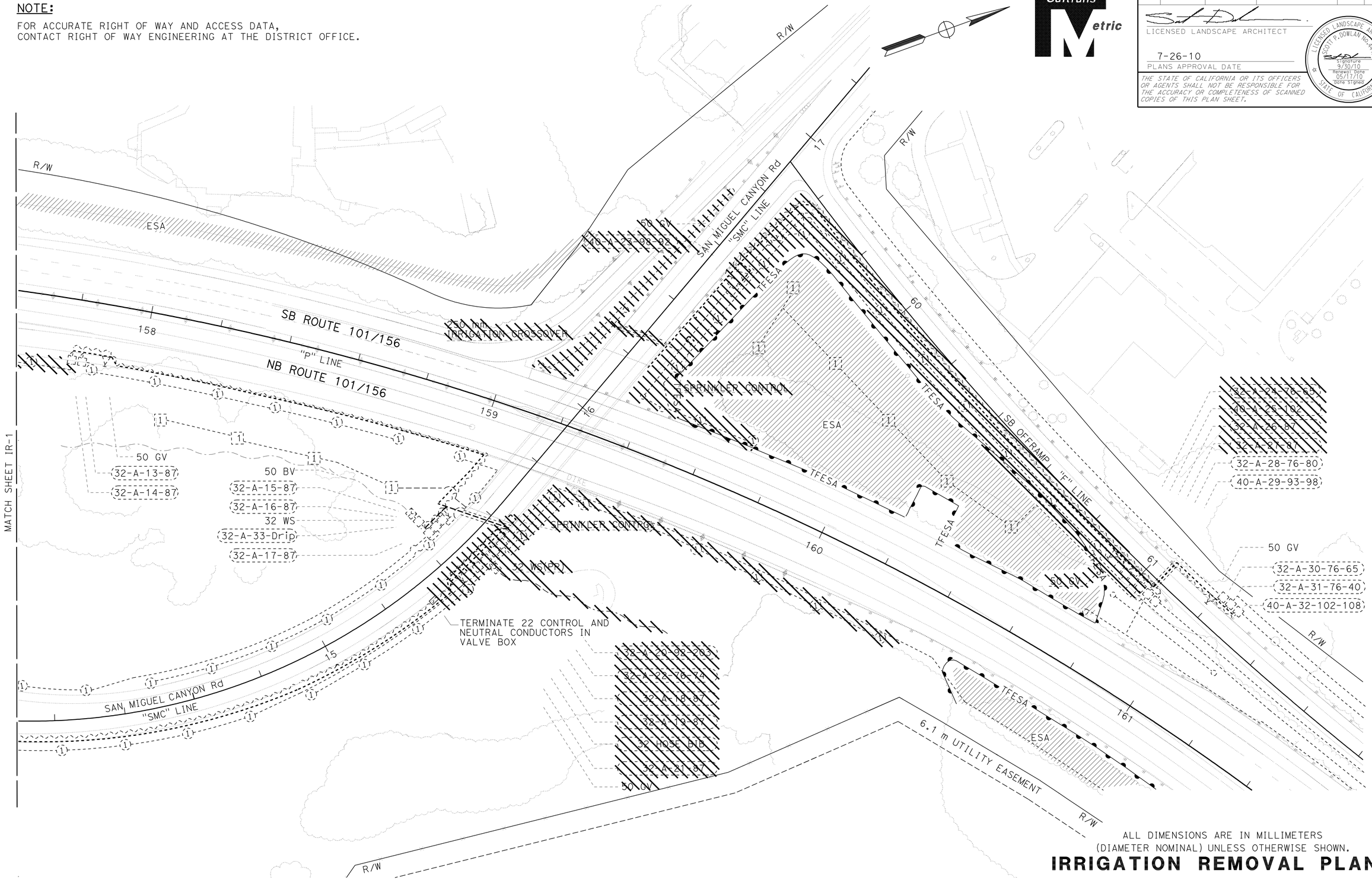

ALL DIMENSIONS ARE IN MILLIMETERS
(DIAMETER NOMINAL) UNLESS OTHERWISE SHOWN.

IRRIGATION REMOVAL PLAN

SCALE 1:500

IR-2

THIS PLAN ACCURATE FOR IRRIGATION REMOVAL WORK ONLY.

STATE OF CALIFORNIA - DEPARTMENT OF TRANSPORTATION
Caltrans LANDSCAPE ARCHITECTURE

SENIOR LANDSCAPE ARCHITECT: DENNIS REEVES
CALCULATED-DESIGNED BY: SCOTT DOWLAN
CHECKED BY: CORBY KILMER
REVISED BY / DATE REVISED

LAST REVISION DATE PLOTTED => 03-AUG-2010
05-17-10 TIME PLOTTED => 13:42

Dist	COUNTY	ROUTE	KILOMETER POST TOTAL PROJECT	SHEET No.	TOTAL SHEETS
05	Mon	101	R146.8/159.7	1055	1402

LICENSED LANDSCAPE ARCHITECT

7-26-10
PLANS APPROVAL DATE

LICENSED LANDSCAPE ARCHITECT SCOTT P. DOWLAN No. 4410 Signature 9/30/10 Renewal Date 05/17/10 Date Signed STATE OF CALIFORNIA

THE STATE OF CALIFORNIA OR ITS OFFICERS OR AGENTS SHALL NOT BE RESPONSIBLE FOR THE ACCURACY OR COMPLETENESS OF SCANNED COPIES OF THIS PLAN SHEET.

Caltrans Metric

NOTE:

1. FOR ACCURATE RIGHT OF WAY AND ACCESS DATA, CONTACT RIGHT OF WAY ENGINEERING AT THE DISTRICT OFFICE.
2. SEE CONSTRUCTION DETAILS (IRRIGATION) SHEETS FOR ADDITIONAL IRRIGATION WORK.
3. CHECK AND TEST EXISTING IRRIGATION FACILITIES AND MAINTAIN EXISTING IRRIGATION FACILITIES SHALL NOT INCLUDE RCV A-3, A-4, A-5, A-6, A-7, A-8, A-9, A-13, A-15, A-16 AND THEIR ASSOCIATED LATERAL SUPPLY LINE AND SPRINKLERS.

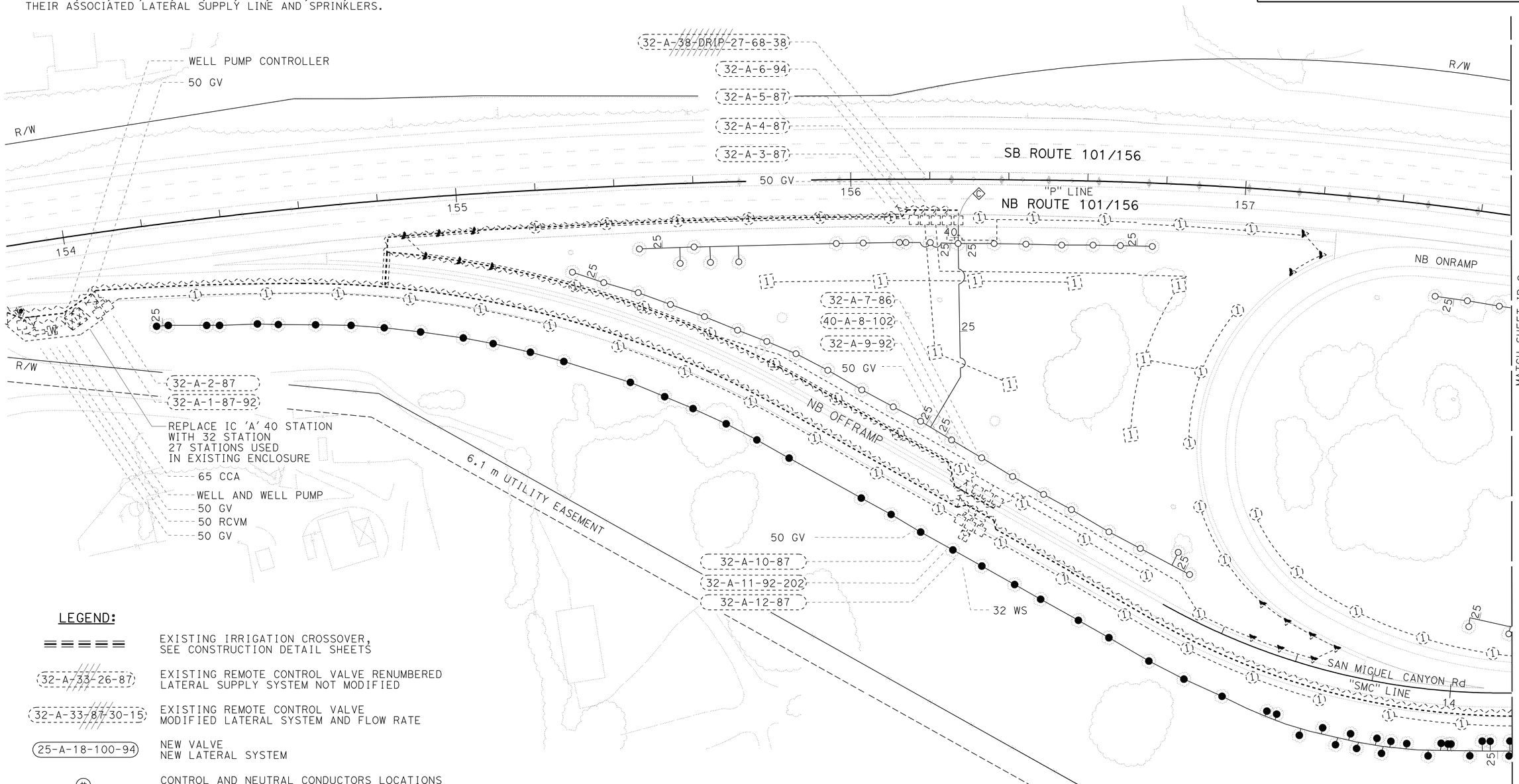

LEGEND:

═══	EXISTING IRRIGATION CROSSOVER, SEE CONSTRUCTION DETAIL SHEETS
32-A-33-26-87	EXISTING REMOTE CONTROL VALVE RENUMBERED LATERAL SUPPLY SYSTEM NOT MODIFIED
32-A-33-87-30-15	EXISTING REMOTE CONTROL VALVE MODIFIED LATERAL SYSTEM AND FLOW RATE
25-A-18-100-94	NEW VALVE NEW LATERAL SYSTEM
#	CONTROL AND NEUTRAL CONDUCTORS LOCATIONS REFERENCE SHEET LD-1
	EXISTING PLANTS

ALL DIMENSIONS ARE IN MILLIMETERS (DIAMETER NOMINAL) UNLESS OTHERWISE SHOWN.

IRRIGATION PLAN

SCALE 1:500

IP-1

THIS PLAN ACCURATE FOR IRRIGATION WORK ONLY.

STATE OF CALIFORNIA - DEPARTMENT OF TRANSPORTATION
Caltrans LANDSCAPE ARCHITECTURE

SENIOR LANDSCAPE ARCHITECT: DENNIS REEVES
CALCULATED-DESIGNED BY: SCOTT DOWLAN
CHECKED BY: CORBY KILMER
REVISED BY / DATE REVISED

LAST REVISION 05-17-10
DATE PLOTTED => 03-AUG-2010
TIME PLOTTED => 11:34

Dist	COUNTY	ROUTE	KILOMETER POST TOTAL PROJECT	SHEET No.	TOTAL SHEETS
05	Mon	101	R146.8/159.7	1056	1402

LICENSED LANDSCAPE ARCHITECT

7-26-10
PLANS APPROVAL DATE

LICENSED LANDSCAPE ARCHITECT SCOTT P. DOWLAN No. 4910 Signature 9/30/10 Renewal Date 05/17/10 Date Signed STATE OF CALIFORNIA

THE STATE OF CALIFORNIA OR ITS OFFICERS OR AGENTS SHALL NOT BE RESPONSIBLE FOR THE ACCURACY OR COMPLETENESS OF SCANNED COPIES OF THIS PLAN SHEET.

Caltrans Metric

NOTE:

1. FOR ACCURATE RIGHT OF WAY AND ACCESS DATA, CONTACT RIGHT OF WAY ENGINEERING AT THE DISTRICT OFFICE.
2. REFER TO SHEET LD-1 FOR CONTROL AND NEUTRAL CONDUCTOR TABLE.

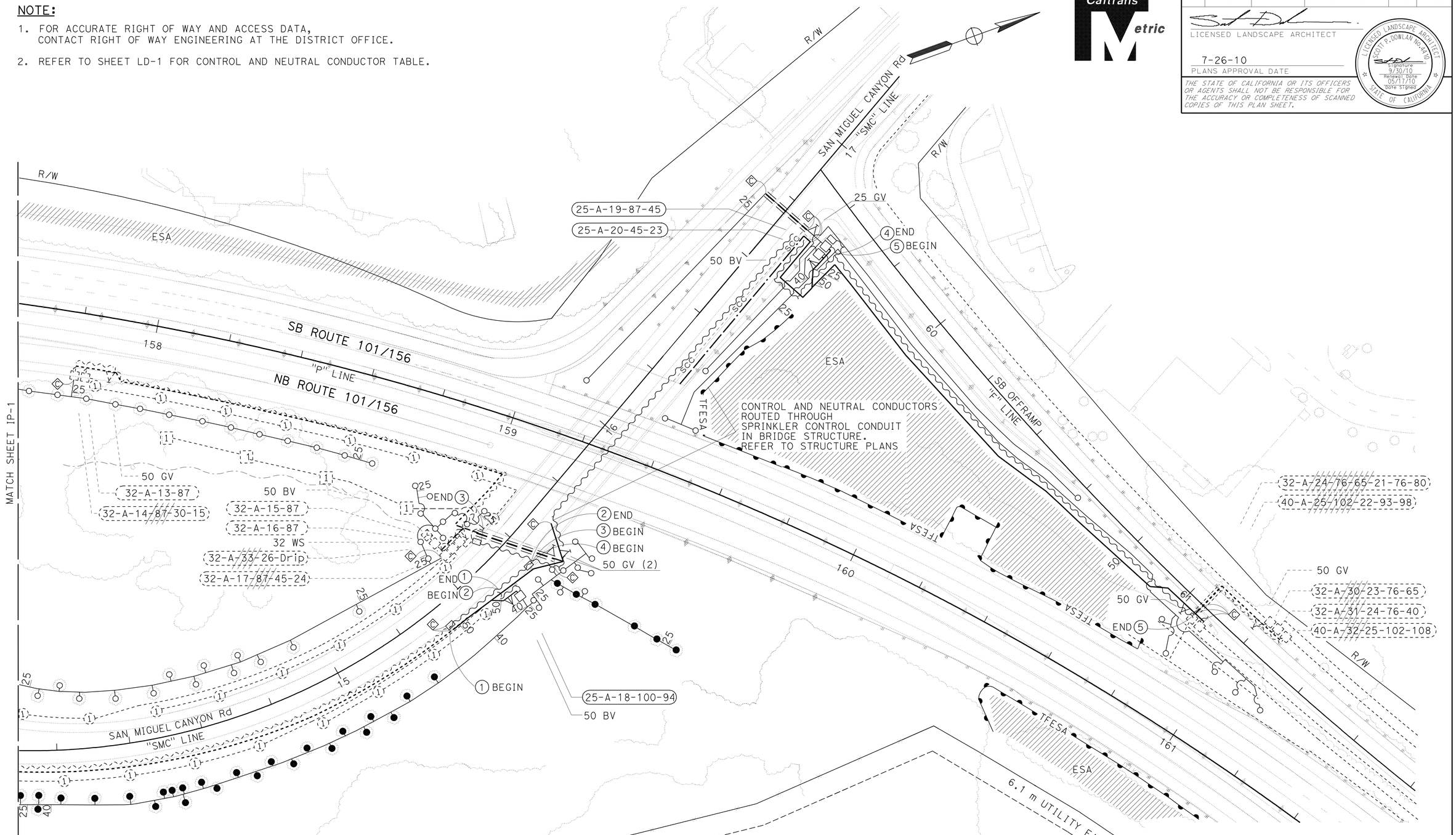

ALL DIMENSIONS ARE IN MILLIMETERS (DIAMETER NOMINAL) UNLESS OTHERWISE SHOWN.

IRRIGATION PLAN

SCALE 1:500

IP-2

THIS PLAN ACCURATE FOR IRRIGATION WORK ONLY.

STATE OF CALIFORNIA - DEPARTMENT OF TRANSPORTATION
Caltrans LANDSCAPE ARCHITECTURE

SENIOR LANDSCAPE ARCHITECT: DENNIS REEVES
CALCULATED-DESIGNED BY: SCOTT DOWLAN
CHECKED BY: CORBY KILMER
REVISED BY / DATE REVISED

LAST REVISION 05-17-10 | DATE PLOTTED => 03-AUG-2010 | TIME PLOTTED => 11:34

Dist	COUNTY	ROUTE	KILOMETER POST TOTAL PROJECT	SHEET No.	TOTAL SHEETS
05	Mon	101	R146.8/159.7	1057	1402

LICENSED LANDSCAPE ARCHITECT

7-26-10
PLANS APPROVAL DATE

LICENSED LANDSCAPE ARCHITECT
SCOTT P. DOWLAN No. 4410
Signature
9/30/10
Renewal Date
05/17/10
Date Signed
STATE OF CALIFORNIA

THE STATE OF CALIFORNIA OR ITS OFFICERS OR AGENTS SHALL NOT BE RESPONSIBLE FOR THE ACCURACY OR COMPLETENESS OF SCANNED COPIES OF THIS PLAN SHEET.

Caltrans Metric

NOTE:

FOR ACCURATE RIGHT OF WAY AND ACCESS DATA,
CONTACT RIGHT OF WAY ENGINEERING AT THE DISTRICT OFFICE.

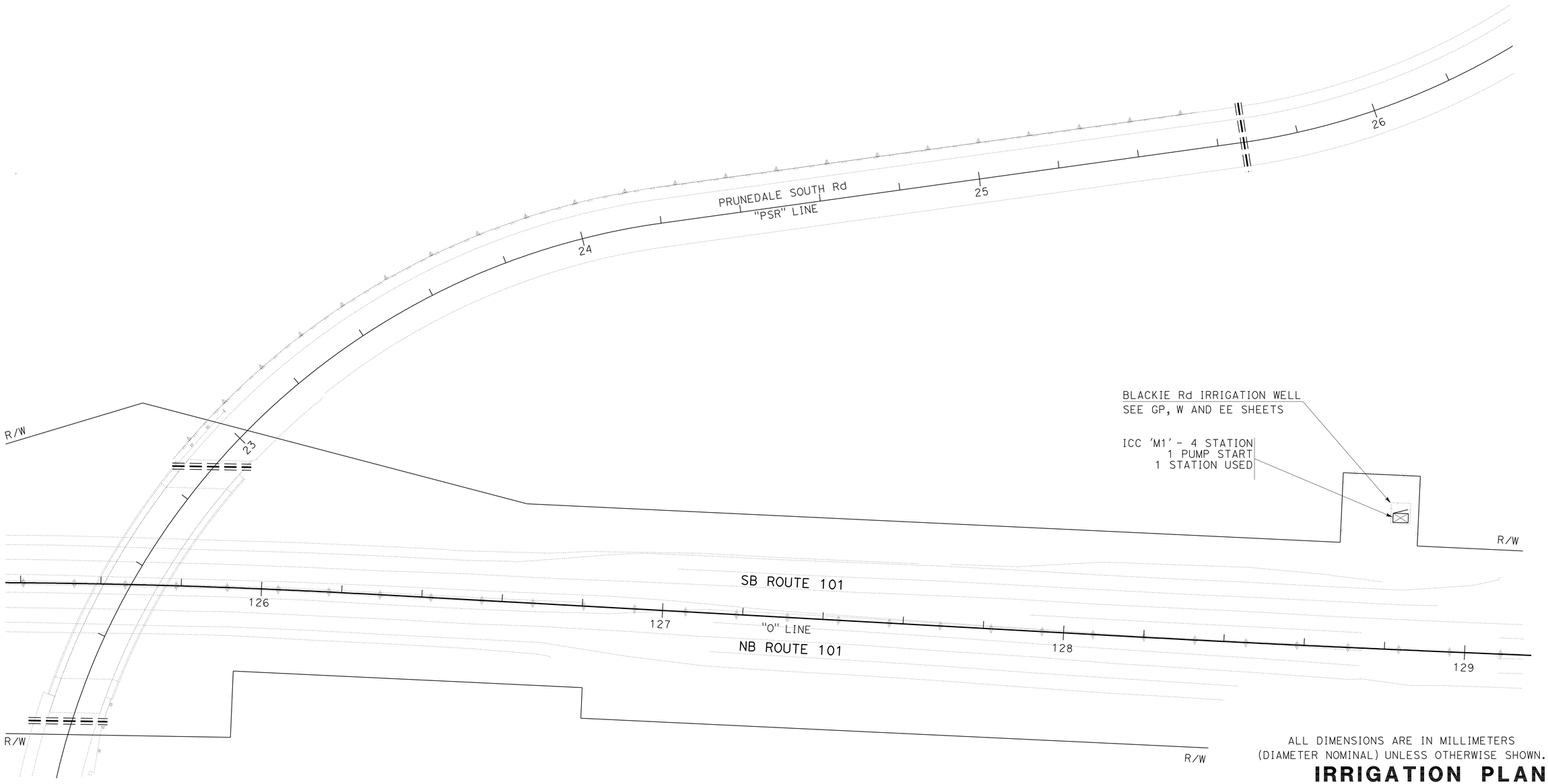

ALL DIMENSIONS ARE IN MILLIMETERS
(DIAMETER NOMINAL) UNLESS OTHERWISE SHOWN.

IRRIGATION PLAN

SCALE 1:500

IP-3

THIS PLAN ACCURATE FOR IRRIGATION WORK ONLY.

REVISED BY	
DATE REVISED	
SCOTT DOWLAN	
CORBY KILMER	
CALCULATED-DESIGNED BY	
CHECKED BY	
SENIOR LANDSCAPE ARCHITECT	
DENNIS REEVES	

STATE OF CALIFORNIA - DEPARTMENT OF TRANSPORTATION
Caltrans LANDSCAPE ARCHITECTURE

LAST REVISION 05-17-10 | DATE PLOTTED => 03-AUG-2010 | TIME PLOTTED => 11:34

Dist	COUNTY	ROUTE	KILOMETER POST TOTAL PROJECT	SHEET No.	TOTAL SHEETS
05	Mon	101	R146.8/159.7	1058	1402

LICENSED LANDSCAPE ARCHITECT

7-26-10
PLANS APPROVAL DATE

LICENSED LANDSCAPE ARCHITECT SCOTT P. DOWLAN No. 4410 Signature 9/30/10 Renewal Date 05/17/10 Date Signed STATE OF CALIFORNIA

THE STATE OF CALIFORNIA OR ITS OFFICERS OR AGENTS SHALL NOT BE RESPONSIBLE FOR THE ACCURACY OR COMPLETENESS OF SCANNED COPIES OF THIS PLAN SHEET.

Caltrans Metric

NOTE:

FOR ACCURATE RIGHT OF WAY AND ACCESS DATA, CONTACT RIGHT OF WAY ENGINEERING AT THE DISTRICT OFFICE.

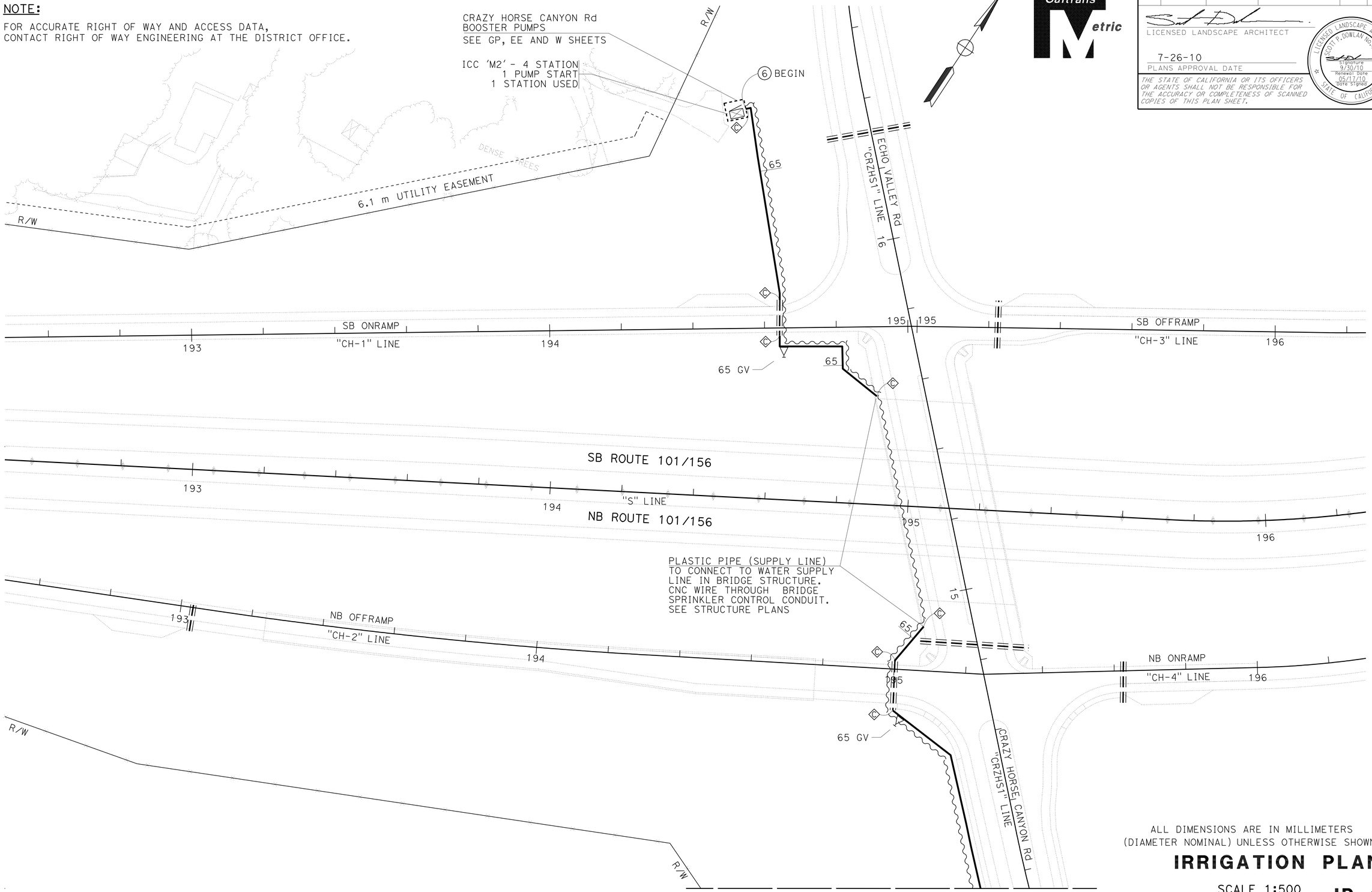

ALL DIMENSIONS ARE IN MILLIMETERS
(DIAMETER NOMINAL) UNLESS OTHERWISE SHOWN.

IRRIGATION PLAN

SCALE 1:500

IP-4

THIS PLAN ACCURATE FOR IRRIGATION WORK ONLY.

REVISED BY	DATE REVISED

SCOTT DOWLAN — CORBY KILMER

CALCULATED-DESIGNED BY — CHECKED BY

SENIOR LANDSCAPE ARCHITECT — DENNIS REEVES

STATE OF CALIFORNIA - DEPARTMENT OF TRANSPORTATION
Caltrans LANDSCAPE ARCHITECTURE

LAST REVISION 05-17-10 — DATE PLOTTED => 03-AUG-2010 — TIME PLOTTED => 11:34

Dist	COUNTY	ROUTE	KILOMETER POST TOTAL PROJECT	SHEET No.	TOTAL SHEETS
05	Mon	101	R146.8/159.7	1059	1402

LICENSED LANDSCAPE ARCHITECT

7-26-10
PLANS APPROVAL DATE

THE STATE OF CALIFORNIA OR ITS OFFICERS OR AGENTS SHALL NOT BE RESPONSIBLE FOR THE ACCURACY OR COMPLETENESS OF SCANNED COPIES OF THIS PLAN SHEET.

LICENSED LANDSCAPE ARCHITECT
SCOTT P. DOWLAN No. 4410
Signature
9/30/10
Renewal Date
05/17/10
Date Signed
STATE OF CALIFORNIA

Caltrans Metric

NOTE:

FOR ACCURATE RIGHT OF WAY AND ACCESS DATA,
CONTACT RIGHT OF WAY ENGINEERING AT THE DISTRICT OFFICE.

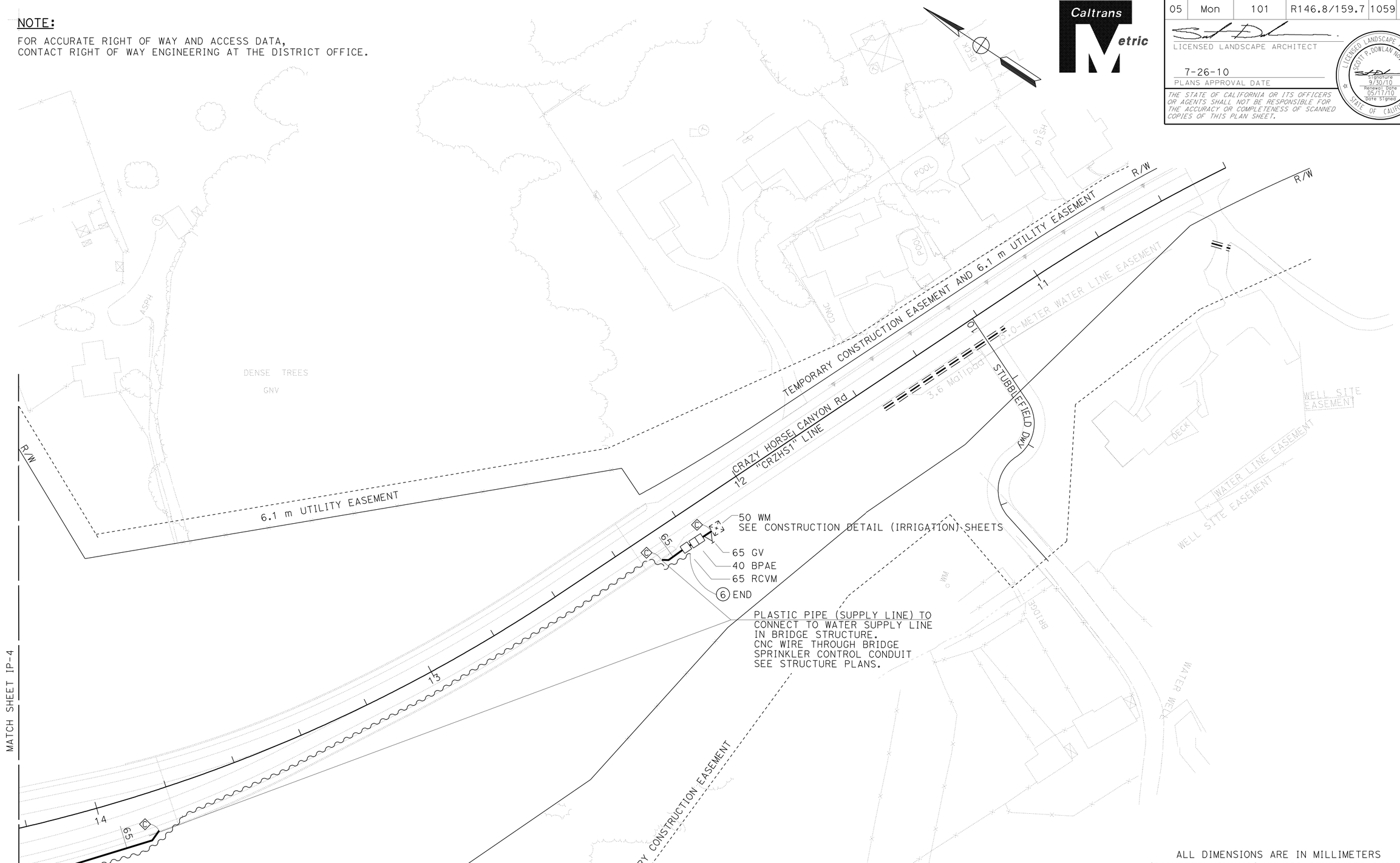

ALL DIMENSIONS ARE IN MILLIMETERS
(DIAMETER NOMINAL) UNLESS OTHERWISE SHOWN.

IRRIGATION PLAN

SCALE 1:500

IP-5

THIS PLAN ACCURATE FOR IRRIGATION WORK ONLY.

REVISED BY	DATE REVISED

CALCULATED-DESIGNED BY: SCOTT DOWLAN
CHECKED BY: CORBY KILMER

SENIOR LANDSCAPE ARCHITECT: DENNIS REEVES

STATE OF CALIFORNIA - DEPARTMENT OF TRANSPORTATION
Caltrans LANDSCAPE ARCHITECTURE

LAST REVISION 05-17-10 | DATE PLOTTED => 03-AUG-2010 | TIME PLOTTED => 11:34

Dist	COUNTY	ROUTE	KILOMETER POST TOTAL PROJECT	SHEET No.	TOTAL SHEETS
05	Mon	101	R146.8/159.7	1060	1402

LICENSED LANDSCAPE ARCHITECT

7-26-10
PLANS APPROVAL DATE

LICENSED LANDSCAPE ARCHITECT SCOTT P. DOWLAN No. 4410 Signature 9/30/10 Renewal Date 05/17/10 Date Signed STATE OF CALIFORNIA

THE STATE OF CALIFORNIA OR ITS OFFICERS OR AGENTS SHALL NOT BE RESPONSIBLE FOR THE ACCURACY OR COMPLETENESS OF SCANNED COPIES OF THIS PLAN SHEET.

Caltrans Metric

NOTE:

FOR ACCURATE RIGHT OF WAY AND ACCESS DATA,
CONTACT RIGHT OF WAY ENGINEERING AT THE DISTRICT OFFICE.

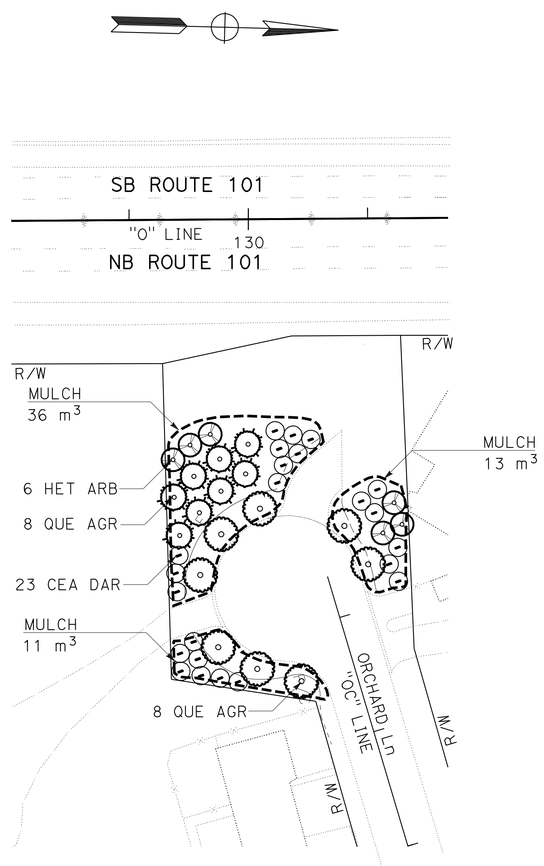

PLANTING PLAN

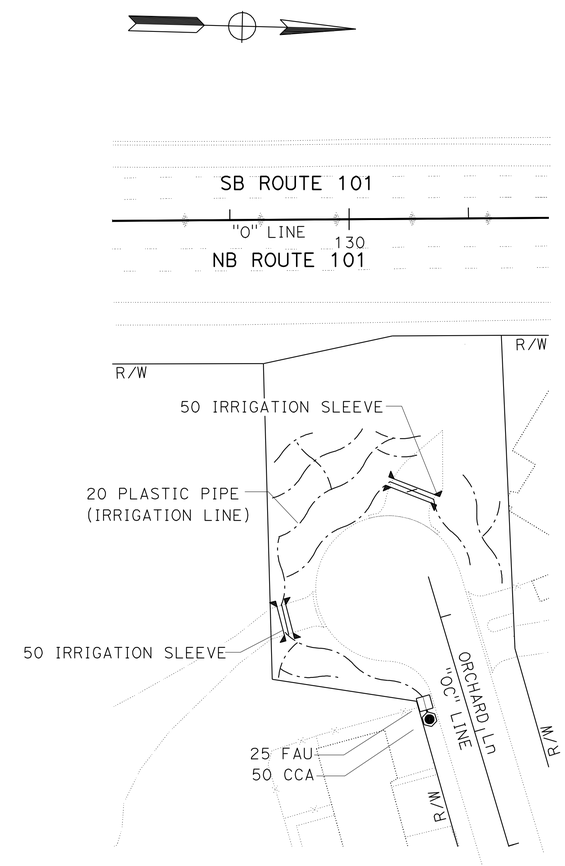

IRRIGATION PLAN

ORCHARD LANE, Sta 30+13

ORCHARD LANE

ALL DIMENSIONS ARE IN MILLIMETERS
(DIAMETER NOMINAL) UNLESS OTHERWISE SHOWN.

PLANTING AND IRRIGATION PLAN

SCALE 1:500

PI-1

THIS PLAN ACCURATE FOR PLANTING AND IRRIGATION WORK ONLY.

STATE OF CALIFORNIA - DEPARTMENT OF TRANSPORTATION
Caltrans LANDSCAPE ARCHITECTURE

SENIOR LANDSCAPE ARCHITECT: DENNIS REEVES
CALCULATED-DESIGNED BY: SCOTT DOWLAN
CHECKED BY: CORBY KILMER
REVISED BY
DATE REVISED

LAST REVISION 05-17-10
DATE PLOTTED => 03-AUG-2010
TIME PLOTTED => 11:35

Dist	COUNTY	ROUTE	KILOMETER POST TOTAL PROJECT	SHEET No.	TOTAL SHEETS
05	Mon	101	R146.8/159.7	1061	1402

Caltrans Metric

LICENSED LANDSCAPE ARCHITECT

7-26-10
PLANS APPROVAL DATE

LICENSED LANDSCAPE ARCHITECT SCOTT P. DOWLAN No. 4461 Signature 9/30/10 Renewal Date 05/17/10 Date Signed STATE OF CALIFORNIA

THE STATE OF CALIFORNIA OR ITS OFFICERS OR AGENTS SHALL NOT BE RESPONSIBLE FOR THE ACCURACY OR COMPLETENESS OF SCANNED COPIES OF THIS PLAN SHEET.

NOTE:

1. PLASTIC PIPE SUPPLY LINES (MAIN) SHALL BE PR 315.

SPRINKLER SCHEDULE

SYMBOL	TYPE	DESCRIPTION	SPRAY PATTERN	OPERATING PRESSURE (KILOPASCAL) (kPa)	PRESSURE COMPENSATING	PLUS / MINUS 5% DISCHARGE: LITERS PER SECOND L/s	LITERS PER MINUTE L/min	LITERS PER HOUR L/h	RADIUS (IN METERS)(m)	WIDTH x LENGTH (IN METERS)(m)	MATERIAL	NOZZLE SIZE IN MILLIMETERS (mm)	INLET CONNECTION (NPT) (DN IN MILLIMETERS)(mm)	POSITIVE-LOCKING ADJ ARC STOP	BACKSPLASH PREVENTER	DIFFUSER PIN	DISTANCE CONTROL FLAP	ADJ DISCHARGE	RISER: TYPE	RISER MATERIAL: PLASTIC	RISER MATERIAL: GALVANIZED	RISER: SIZE (IPS) (DN) (IN MILLIMETERS)(mm)	RISER: HEIGHT (IN MILLIMETERS)(mm)	SWING JOINT (TYPE)	RISER SUPPORT	SPRINKLER PROTECTOR (TYPE)	REMARKS
○	C-2	FLOOD BUBBLER	F	207	X	-	1.8	-	-	-	PL	-	15	-	-	-	-	-	V	-	-	15	-	-	-	-	ONE PER PLANT (1)
●	C-2	FLOOD BUBBLER	F	207	X	-	0.9	-	-	-	PL	-	15	-	-	-	-	-	V	-	-	15	-	-	-	-	ONE PER PLANT (1)
-	D-1	EMITTER	-	207	X	-	-	7.6	-	-	PL	-	-	-	-	-	-	-	-	-	-	-	-	-	-	-	(2) (3)

X IN BOX DENOTES REQUIREMENT

APPLICABLE WHEN CIRCLED BELOW:

(1) - INSTALL ON UPHILL SIDE OF PLANT.

(2) - INSTALL AT EDGE OF ROOTBALL ON OPPOSITE SIDES OF PLANT.

(3) - INSTALL TWO EMITTERS PER PLANT (GROUP A)
INSTALL FOUR EMITTERS PER PLANT (GROUP U)

ABBREVIATIONS

ADJ — ADJUSTABLE
B/B — BRASS/BRONZE
B/B/PL — BRASS/BRONZE/PLASTIC
B/PL — BRASS/PLASTIC
CST — CENTER STRIP
DN — DIAMETER NOMINAL
EST — END STRIP
F — FULL CIRCLE
F/P — FULL/PART CIRCLE
H — HALF CIRCLE
IPS — IRON PIPE SIZE
kPa — KILOPASCAL
L — LENGTH OF COVERAGE
L/h — LITERS PER HOUR
L/min — LITERS PER MINUTE
L/s — LITERS PER SECOND
m — METERS
mm — MILLIMETERS
NPT — NATIONAL PIPE THREAD
P — PART CIRCLE
PL — PLASTIC
Q — QUARTER CIRCLE
SST — SIDE STRIP
T — THIRD CIRCLE
TQ — THREE QUARTER CIRCLE
TT — TWO THIRDS CIRCLE
W — WIDTH OF COVERAGE

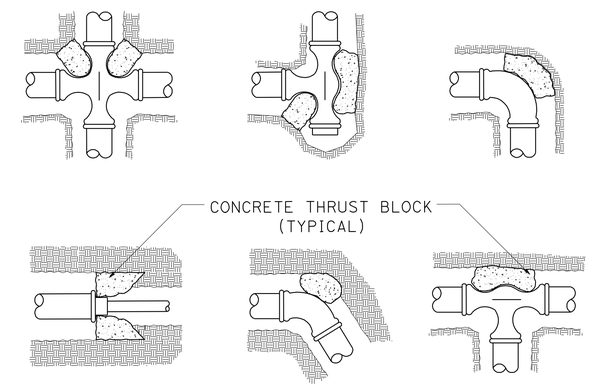

THRUST BLOCKS

CONTROL AND NEUTRAL CONDUCTORS

SHEET	LOCATION (#)	(N) EACH USED	(N) EACH FUTURE	(N) LENGTH m	(N) TOTAL LENGTH m
IP-2	1	15	3	20	360
IP-2	2	14	3	12	204
IP-2	3	7	1	25	200
IP-2	4	8	2	165	1650
IP-2	5	6	2	145	1160
IP-4, IP-5	6	2	1	470	1410

(N) - NOT A SEPARATE PAY ITEM. FOR INFORMATION ONLY.

TERMINATE ALL CONTROL AND NEUTRAL CONDUCTORS IN EITHER VALVE BOXES OR PULL BOXES.

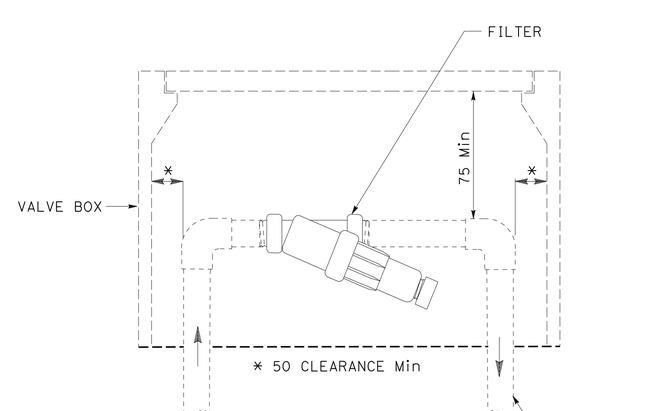

PLAN

FILTER ASSEMBLY UNIT

ALL DIMENSIONS ARE IN MILLIMETERS
UNLESS OTHERWISE SHOWN.

LANDSCAPE DETAILS

NO SCALE **LD-1**

SCOTT DOWLAN — REVISED BY
CORBY KILMER — DATE REVISED
CALCULATED-DESIGNED BY
CHECKED BY
SENIOR LANDSCAPE ARCHITECT
DENNIS REEVES

STATE OF CALIFORNIA - DEPARTMENT OF TRANSPORTATION
Caltrans LANDSCAPE ARCHITECTURE

LAST REVISION 05-17-10 | DATE PLOTTED => 03-AUG-2010 | TIME PLOTTED => 11:35

Dist	COUNTY	ROUTE	KILOMETER POST TOTAL PROJECT	SHEET No.	TOTAL SHEETS
05	Mon	101	R146.8/159.7	1062	1402

Caltrans Metric

LICENSED LANDSCAPE ARCHITECT

7-26-10
PLANS APPROVAL DATE

LICENSED LANDSCAPE ARCHITECT SCOTT P. DOWLAN No. 4410 Signature 9/30/10 Renewal Date 05/17/10 Date Signed STATE OF CALIFORNIA

THE STATE OF CALIFORNIA OR ITS OFFICERS OR AGENTS SHALL NOT BE RESPONSIBLE FOR THE ACCURACY OR COMPLETENESS OF SCANNED COPIES OF THIS PLAN SHEET.

NOTES:

1. ALL DIMENSIONS ARE NOMINAL.
2. MORTAR SHALL BE 1-PART CEMENT, 2-PARTS PLASTER SAND.
3. SEE EE AND W SHEETS FOR LOCATION OF IRRIGATION CONTROLLER ENCLOSURE CABINETS.
4. THE ELECTRICAL ITEMS SHOWN IN DROPOUT ARE NOT LABELED. SEE STANDARD PLAN S-3H FOR ELECTRICAL REQUIREMENTS.

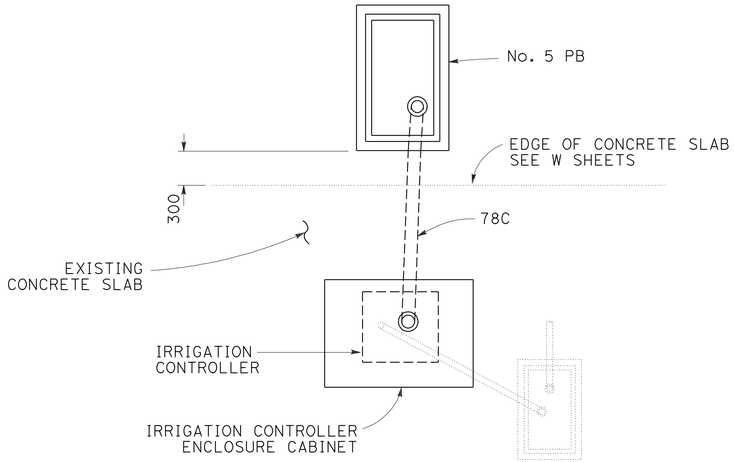

PLAN

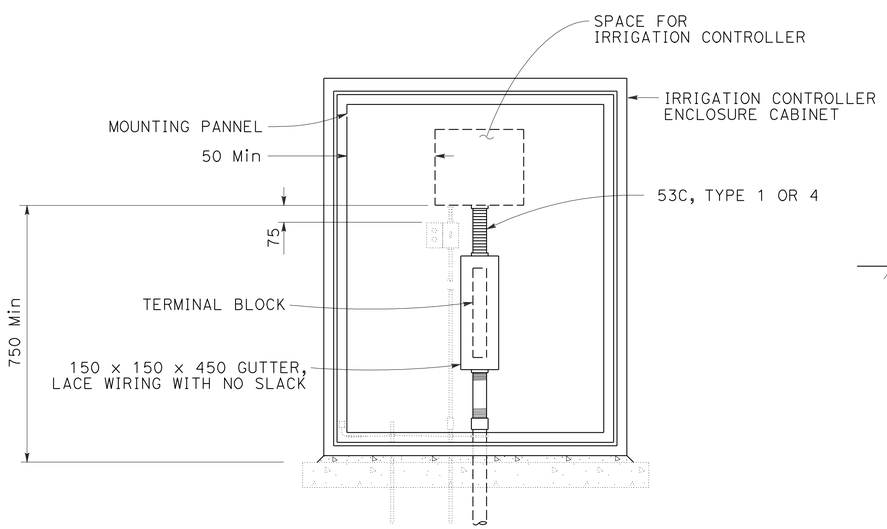

ELEVATION

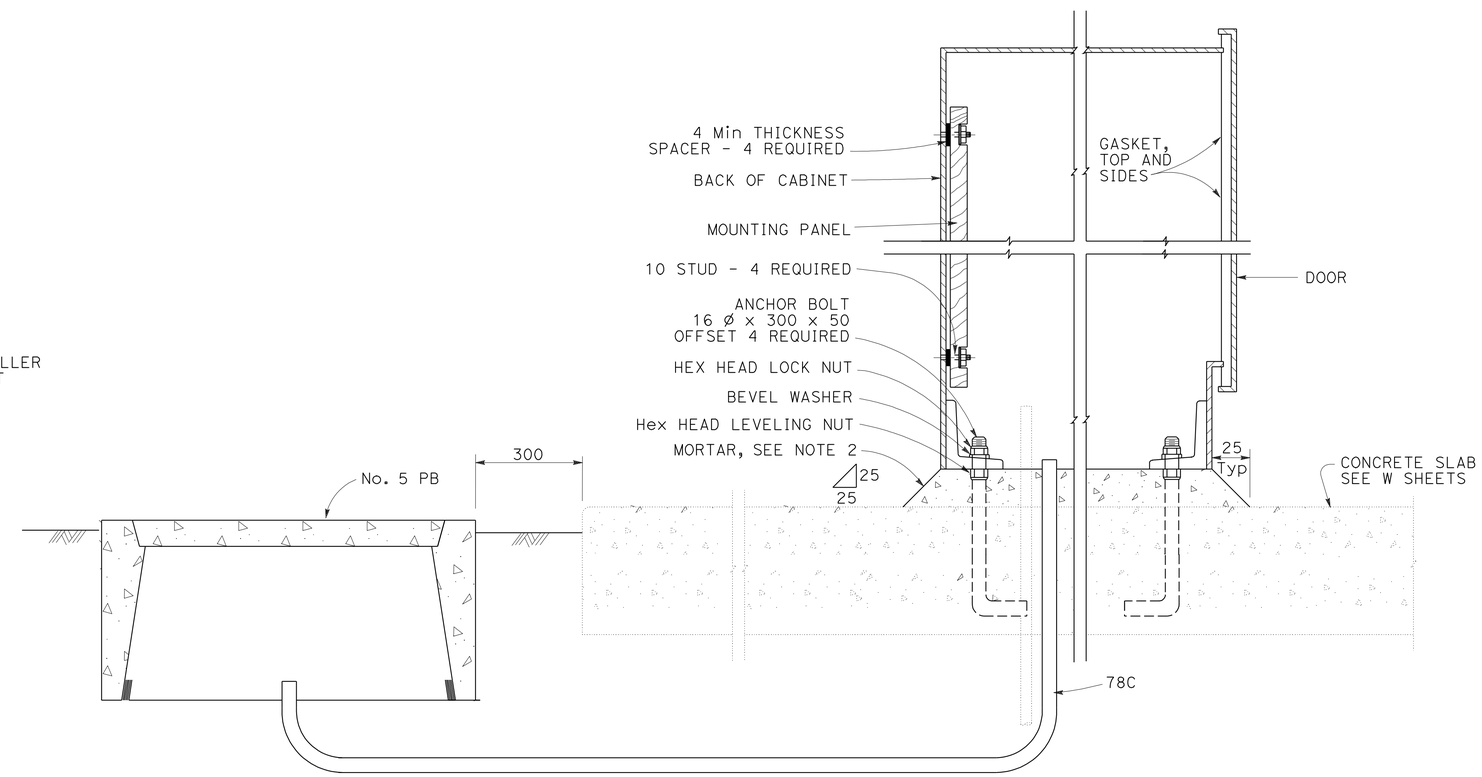

CABINET SECTION

IRRIGATION CONTROLLER ENCLOSURE CABINET

ALL DIMENSIONS ARE IN MILLIMETERS
UNLESS OTHERWISE SHOWN.

LANDSCAPE DETAILS

NO SCALE

LD-2

STATE OF CALIFORNIA - DEPARTMENT OF TRANSPORTATION
Caltrans LANDSCAPE ARCHITECTURE

SENIOR LANDSCAPE ARCHITECT: DENNIS REEVES
CALCULATED-DESIGNED BY: SCOTT DOWLAN
CHECKED BY: CORBY KILMER
REVISED BY
DATE REVISED

LAST REVISION 05-17-10
DATE PLOTTED => 03-AUG-2010
TIME PLOTTED => 11:35

Dist	COUNTY	ROUTE	KILOMETER POST TOTAL PROJECT	SHEET No.	TOTAL SHEETS
05	Mon	101	R146.8/159.7	1063	1402

Caltrans Metric

LICENSED LANDSCAPE ARCHITECT

7-26-10
PLANS APPROVAL DATE

LICENSED LANDSCAPE ARCHITECT SCOTT P. DOWLAN No. 4410 Signature 9/30/10 Renewal Date 09/17/10 Date Signed STATE OF CALIFORNIA

THE STATE OF CALIFORNIA OR ITS OFFICERS OR AGENTS SHALL NOT BE RESPONSIBLE FOR THE ACCURACY OR COMPLETENESS OF SCANNED COPIES OF THIS PLAN SHEET.

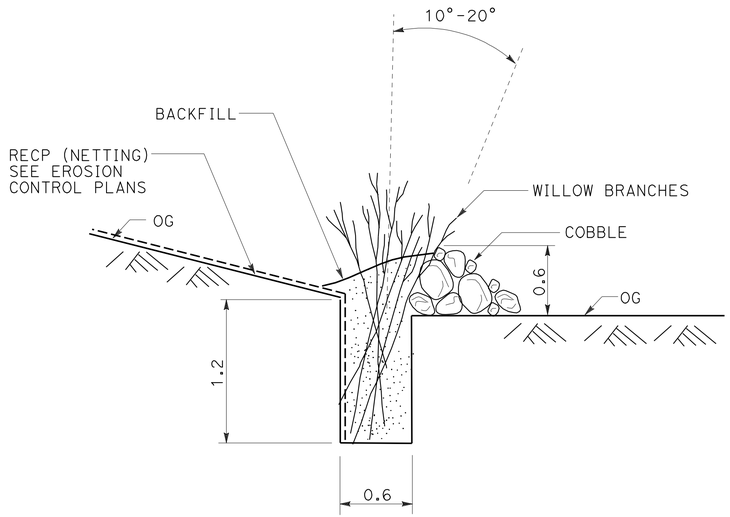

SECTION
LIVE SILTATION

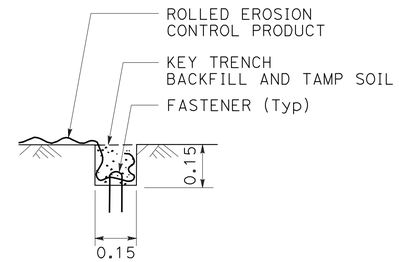

SECTION
KEY TRENCH DETAIL

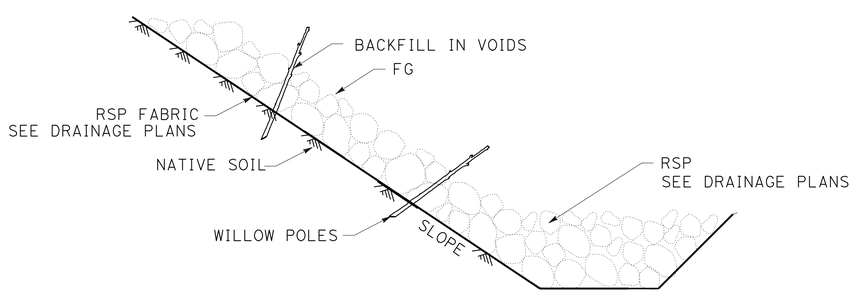

SECTION
WILLOW POLES IN RSP

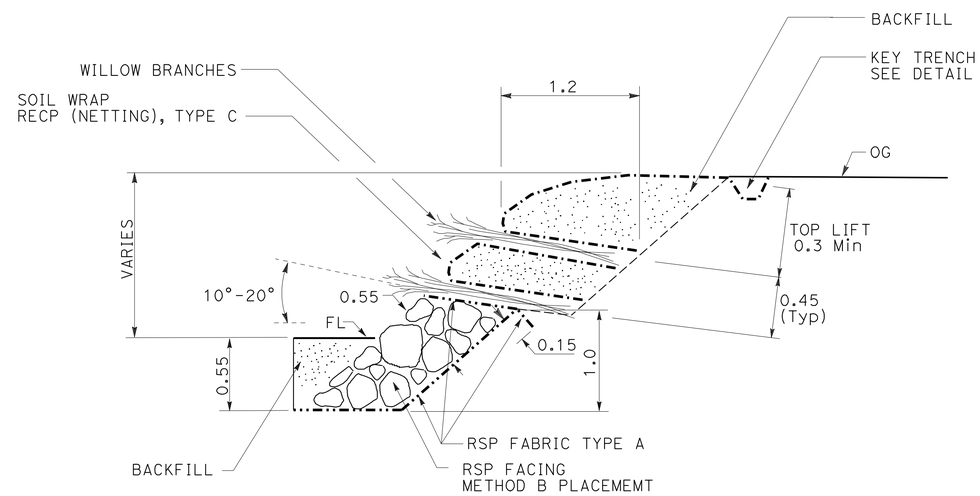

SECTION
BRUSH LAYERING

ALL DIMENSIONS ARE IN METERS
UNLESS OTHERWISE SHOWN.

LANDSCAPE DETAILS

NO SCALE **LD-3**

STATE OF CALIFORNIA - DEPARTMENT OF TRANSPORTATION
Caltrans LANDSCAPE ARCHITECTURE

SENIOR LANDSCAPE ARCHITECT: DENNIS REEVES
CALCULATED-DESIGNED BY: SCOTT DOWLAN
CHECKED BY: CORBY KILMER
REVISED BY / DATE REVISED

LAST REVISION 05-17-10 | DATE PLOTTED => 03-AUG-2010 | TIME PLOTTED => 11:35

Dist	COUNTY	ROUTE	KILOMETER POST TOTAL PROJECT	SHEET No.	TOTAL SHEETS
05	Mon	101	R146.8/159.7	1064	1402

Caltrans Metric

REGISTERED ELECTRICAL ENGINEER — DATE 5-20-10

7-26-10
PLANS APPROVAL DATE

REGISTERED PROFESSIONAL ENGINEER — DANIEL THANH VO — No. 17408 — Exp. 9/30/10 — ELECTRICAL — STATE OF CALIFORNIA

THE STATE OF CALIFORNIA OR ITS OFFICERS OR AGENTS SHALL NOT BE RESPONSIBLE FOR THE ACCURACY OR COMPLETENESS OF ELECTRONIC COPIES OF THIS PLAN SHEET.

NOTES: (FOR THIS SHEET ONLY)

1 Exist 120/240 V, 1Ø, 3-WIRE, TYPE III-BF SERVICE EQUIPMENT ENCLOSURE WITH THE FOLLOWING CIRCUIT BREAKERS:

CTID No. 05441010091270L

AMPERES	VOLTS	POLES	NAME PLATE	METER	PHOTOELECTRIC CONTROL TYPE
100	240	2	MAIN BREAKER	YES	——
40	240	2	HIGHWAY LIGHTING	YES	V
20	120	1	LIGHTING CONTROL	YES	——
*30	240	2	SIGN ILLUMINATION	YES	LC3 SIGN CONTROL
20	120	1	SPARE	YES	——

* ADD CB AND NAME PLATE

2. FOR COMPLETE RIGHT OF WAY AND ACCURATE ACCESS DATA, SEE RIGHT OF WAY RECORD MAPS AT DISTRICT OFFICE.

ABBREVIATIONS:

PG&E - PACIFIC GAS AND ELECTRIC
ATT - AMERICAN TELEPHONE AND TELEGRAPH
CTID - CALTRANS IDENTIFICATION
MVDS - MICROWAVE VEHICLE DETECTION SYSTEM
OCC - OUTDOOR CAT5E CABLE
BPCPE - BOOSTER PUMP CONTROL PANEL ENCLOSURE
WPCPE - WELL PUMP CONTROL PANEL ENCLOSURE

LEGEND:

BPCPE - BOOSTER PUMP CONTROL PANEL ENCLOSURE

WPCPE - WELL PUMP CONTROL PANEL ENCLOSURE

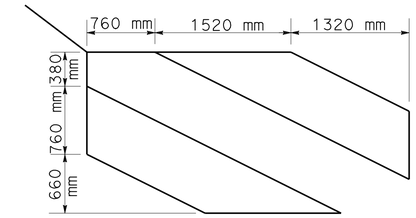

1.8 m X 3.6 m
TYPE D LOOP DETECTOR SAWCUT DETAIL
NO SCALE

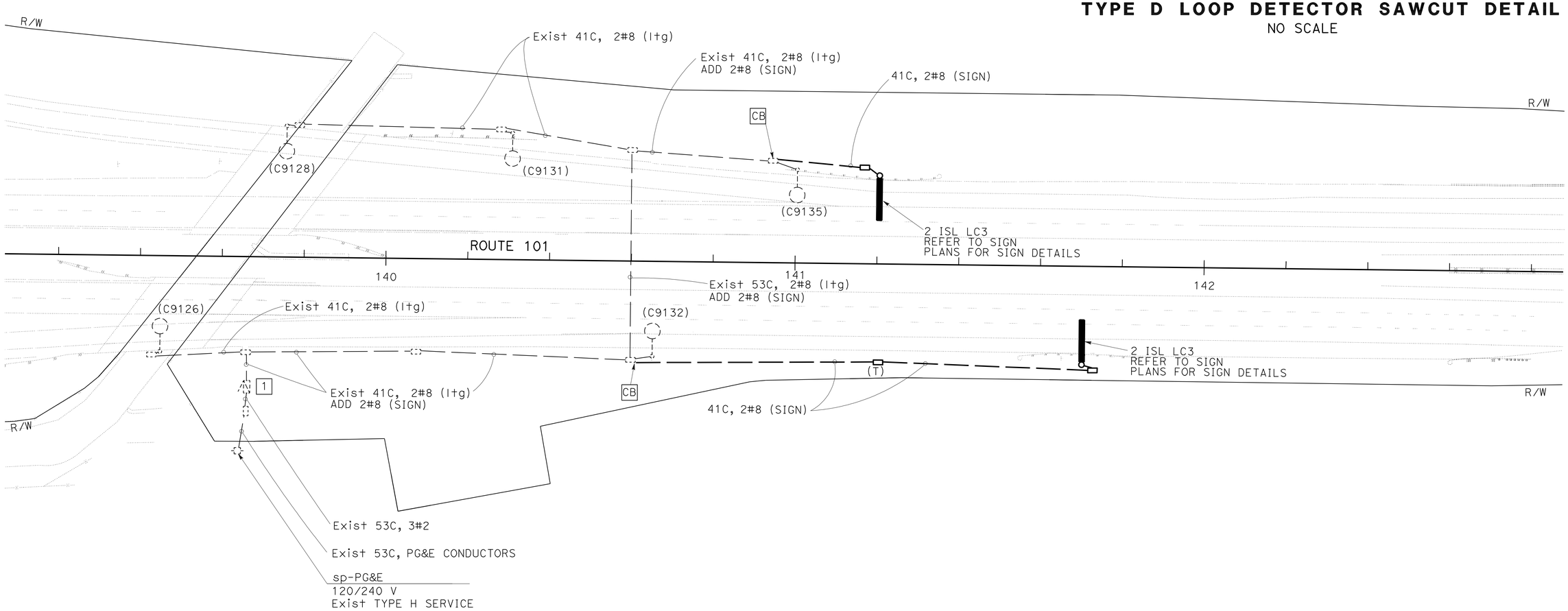

ALL DIMENSIONS ARE IN METERS UNLESS OTHERWISE SHOWN

THIS PLAN IS ACCURATE FOR ELECTRICAL WORK ONLY.

LIGHTING AND SIGN ILLUMINATION

SCALE 1:500

E-1

STATE OF CALIFORNIA - DEPARTMENT OF TRANSPORTATION
Caltrans 06-ELECTRICAL DESIGN

FUNCTIONAL SUPERVISOR: ALI BAKHDOUD
CALCULATED-DESIGNED BY: KARIM ABDOLLAHIAN
CHECKED BY: DANIEL T. VO
REVISED BY / DATE REVISED

LAST REVISION 05-18-10 | DATE PLOTTED => 03-AUG-2010 | TIME PLOTTED => 11:35

Dist	COUNTY	ROUTE	KILOMETER POST TOTAL PROJECT	SHEET No.	TOTAL SHEETS
05	Mon	101	R146.8/159.7	1065	1402

REGISTERED ELECTRICAL ENGINEER 5-20-10 DATE

7-26-10
PLANS APPROVAL DATE

REGISTERED PROFESSIONAL ENGINEER DANIEL THANH VO No. 17408 Exp. 9/30/10 ELECTRICAL STATE OF CALIFORNIA

THE STATE OF CALIFORNIA OR ITS OFFICERS OR AGENTS SHALL NOT BE RESPONSIBLE FOR THE ACCURACY OR COMPLETENESS OF ELECTRONIC COPIES OF THIS PLAN SHEET.

Caltrans Metric

NOTES: (FOR THIS SHEET ONLY)

1. 120/240 V, 1Ø, 3-WIRE, TYPE III-CF SERVICE EQUIPMENT ENCLOSURE WITH THE FOLLOWING CIRCUIT BREAKERS:

CTID No. 05441010091850T

AMPERES	VOLTS	POLES	NAME PLATE	METER	PHOTOELECTRIC CONTROL TYPE
100	240	2	MAIN BREAKER	YES	——
20	120	1	MVDS	YES	——
20	120	1	CCTV	YES	——
20	120	1	TDC	YES	——
40	240	2	SPARE	YES	——
——	——	6	SPACE	YES	——

CTID No. 05441010091850L

AMPERES	VOLTS	POLES	NAME PLATE	METER	PHOTOELECTRIC CONTROL TYPE
100	240	2	MAIN BREAKER	YES	——
20	120	1	IRRIGATION	YES	——
30	240	2	SIGN ILLUMINATION NB	YES	LC3 SIGN CONTROL
30	240	2	SIGN ILLUMINATION SB	YES	LC3 SIGN CONTROL
40	240	2	SPARE	YES	——
——	——	6	SPACE	YES	——

2. MODEL 334 VIDEO CABINET AS SHOWN ON SHEET E-28.
3. TYPE B TELEPHONE DEMARCATION CABINET AS SHOWN ON SHEET E-28.
4. COIL 20 m 2#10 IN PULL BOX FOR FUTURE IRRIGATION.
5. TYPE CCTV 30 POLE WITH CAMERA ASSEMBLY AND MVDS AS SHOWN ON SHEETS E-28 AND SES-1.
6. PULL BOX PER PG&E REQUIREMENTS.
7. FOR COMPLETE RIGHT OF WAY AND ACCURATE ACCESS DATA, SEE RIGHT OF WAY RECORD MAPS AT DISTRICT OFFICE.

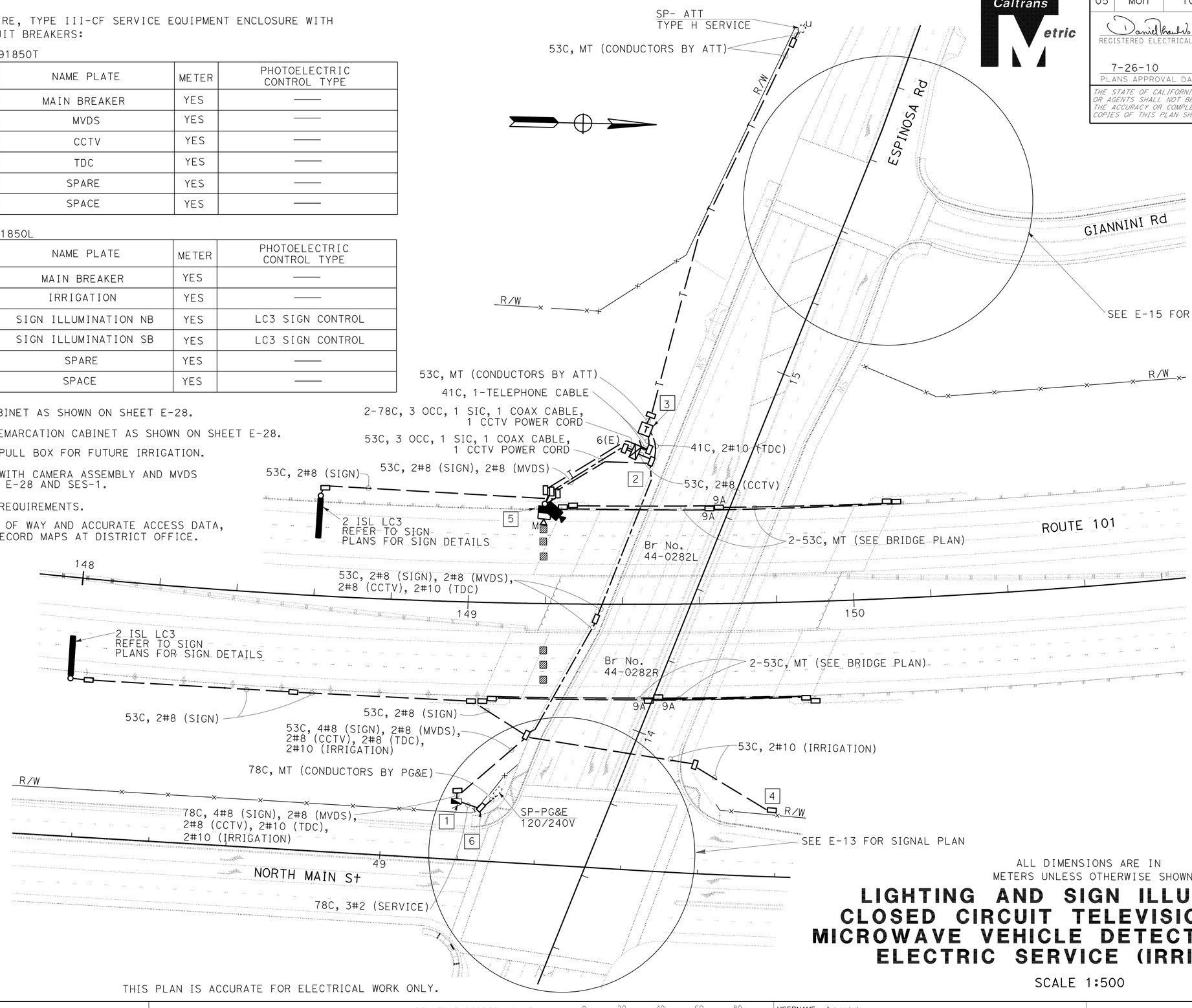

ALL DIMENSIONS ARE IN METERS UNLESS OTHERWISE SHOWN

LIGHTING AND SIGN ILLUMINATION
CLOSED CIRCUIT TELEVISION SYSTEM
MICROWAVE VEHICLE DETECTION SYSTEM
ELECTRIC SERVICE (IRRIGATION)

SCALE 1:500

E-2

THIS PLAN IS ACCURATE FOR ELECTRICAL WORK ONLY.

STATE OF CALIFORNIA - DEPARTMENT OF TRANSPORTATION
Caltrans 06-ELECTRICAL DESIGN

FUNCTIONAL SUPERVISOR: ALI BAKHDOUD
CALCULATED-DESIGNED BY: KARIM ABDOLLAHIAN
CHECKED BY: DANIEL T. VO
REVISED BY / DATE REVISED

LAST REVISION 05-18-10
DATE PLOTTED => 03-AUG-2010
TIME PLOTTED => 12:40

Dist	COUNTY	ROUTE	KILOMETER POST TOTAL PROJECT	SHEET No.	TOTAL SHEETS
05	Mon	101	R146.8/159.7	1066	1402

Caltrans Metric

REGISTERED ELECTRICAL ENGINEER — DATE 5-20-10

7-26-10
PLANS APPROVAL DATE

REGISTERED PROFESSIONAL ENGINEER — DANIEL THANH VO — No. 17408 — Exp. 9/30/10 — ELECTRICAL — STATE OF CALIFORNIA

THE STATE OF CALIFORNIA OR ITS OFFICERS OR AGENTS SHALL NOT BE RESPONSIBLE FOR THE ACCURACY OR COMPLETENESS OF ELECTRONIC COPIES OF THIS PLAN SHEET.

NOTES: (FOR SHEET E-3 THROUGH E-6)

1. 120/240 V, 1Ø, 3-WIRE, TYPE III-CF SERVICE EQUIPMENT ENCLOSURE WITH THE FOLLOWING CIRCUIT BREAKERS:

CTID No. 05441010092539L

AMPERES	VOLTS	POLES	NAME PLATE	METER	PHOTOELECTRIC CONTROL TYPE
100	240	2	MAIN BREAKER	YES	——
30	240	2	HIGHWAY LIGHTING NB	YES	IV
30	240	2	HIGHWAY LIGHTING SB	YES	IV
30	240	2	STREET LIGHTING	YES	IV
30	240	2	SIGN ILLUMINATION NB	YES	LC3 SIGN CONTROL
30	240	2	SIGN ILLUMINATION SB	YES	LC3 SIGN CONTROL
40	240	2	SPARE	YES	——
——	——	6	SPACE	YES	——

CTID No. 05441010092539G

AMPERES	VOLTS	POLES	NAME PLATE	METER	PHOTOELECTRIC CONTROL TYPE
100	240	2	MAIN BREAKER	YES	——
20	120	1	IRRIGATION	YES	——
20	120	1	SPARE	YES	——
40	240	2	SPARE	YES	——
——	——	6	SPACE	YES	——

2. PULL BOX PER PG&E REQUIREMENTS.
3. COIL 20 m 2#8 IN PULL BOX FOR FUTURE IRRIGATION.
4. FOR COMPLETE RIGHT OF WAY AND ACCURATE ACCESS DATA, SEE RIGHT OF WAY RECORD MAPS AT DISTRICT OFFICE.

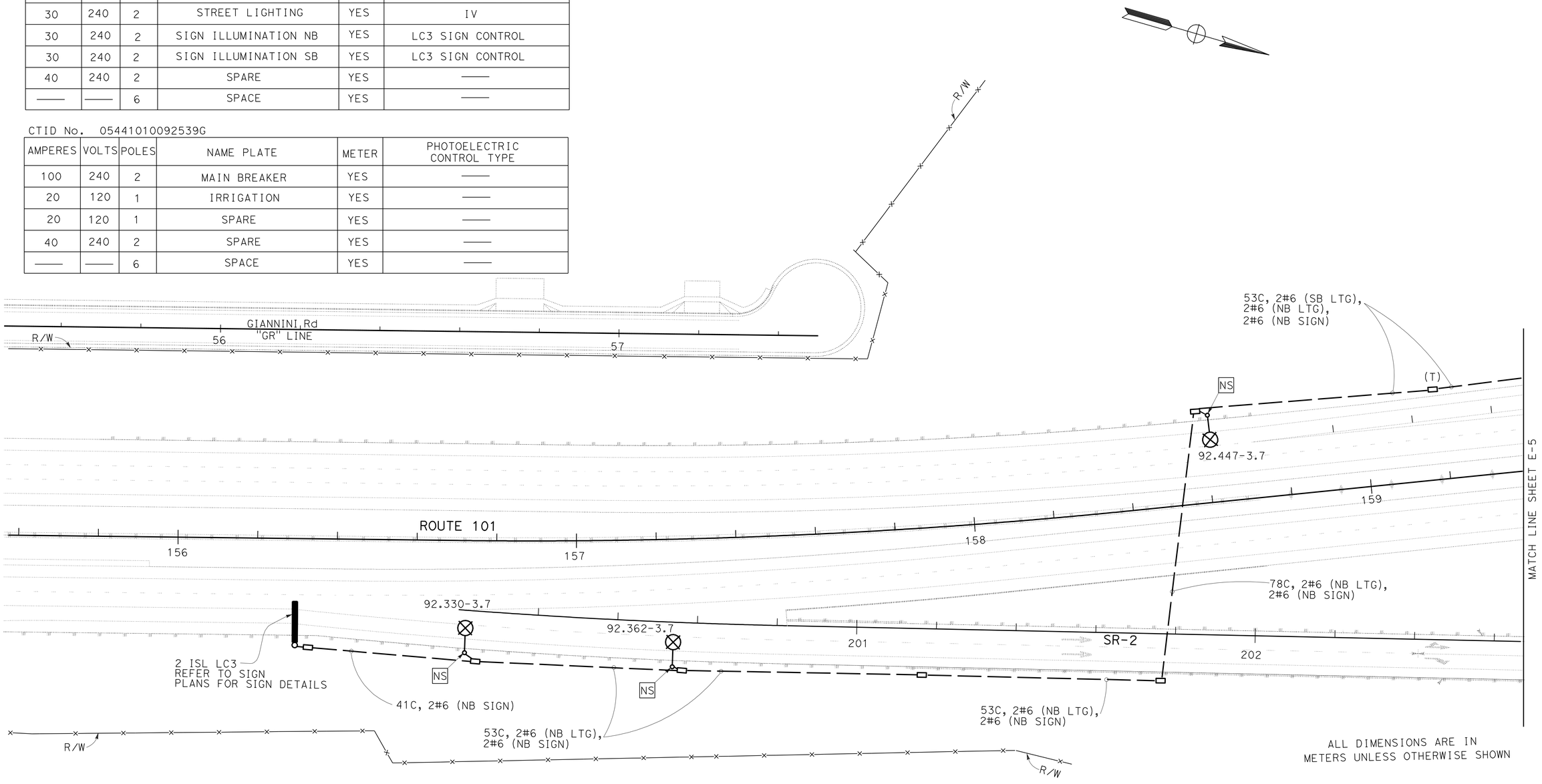

ALL DIMENSIONS ARE IN METERS UNLESS OTHERWISE SHOWN

LIGHTING AND SIGN ILLUMINATION

THIS PLAN IS ACCURATE FOR ELECTRICAL WORK ONLY.

SCALE 1:500

E-3

STATE OF CALIFORNIA - DEPARTMENT OF TRANSPORTATION
Caltrans 06-ELECTRICAL DESIGN

FUNCTIONAL SUPERVISOR: ALI BAKHDOUD
CALCULATED-DESIGNED BY: KARIM ABDOLLAHIAN
CHECKED BY: DANIEL T. VO
REVISED BY / DATE REVISED

LAST REVISION 05-18-10 | DATE PLOTTED => 10-AUG-2010 | TIME PLOTTED => 13:29

Dist	COUNTY	ROUTE	KILOMETER POST TOTAL PROJECT	SHEET No.	TOTAL SHEETS
05	Mon	101	R146.8/159.7	1067	1402

Daniel Thanh Vo 5-20-10
REGISTERED ELECTRICAL ENGINEER DATE

7-26-10
PLANS APPROVAL DATE

REGISTERED PROFESSIONAL ENGINEER DANIEL THANH VO No. 17408 Exp. 9/30/10 ELECTRICAL STATE OF CALIFORNIA

THE STATE OF CALIFORNIA OR ITS OFFICERS OR AGENTS SHALL NOT BE RESPONSIBLE FOR THE ACCURACY OR COMPLETENESS OF ELECTRONIC COPIES OF THIS PLAN SHEET.

Caltrans Metric

NOTES:

1. REFER TO SHEET E-3 FOR ADDITIONAL NOTES.
2. FOR COMPLETE RIGHT OF WAY AND ACCURATE ACCESS DATA, SEE RIGHT OF WAY RECORD MAPS AT DISTRICT OFFICE.

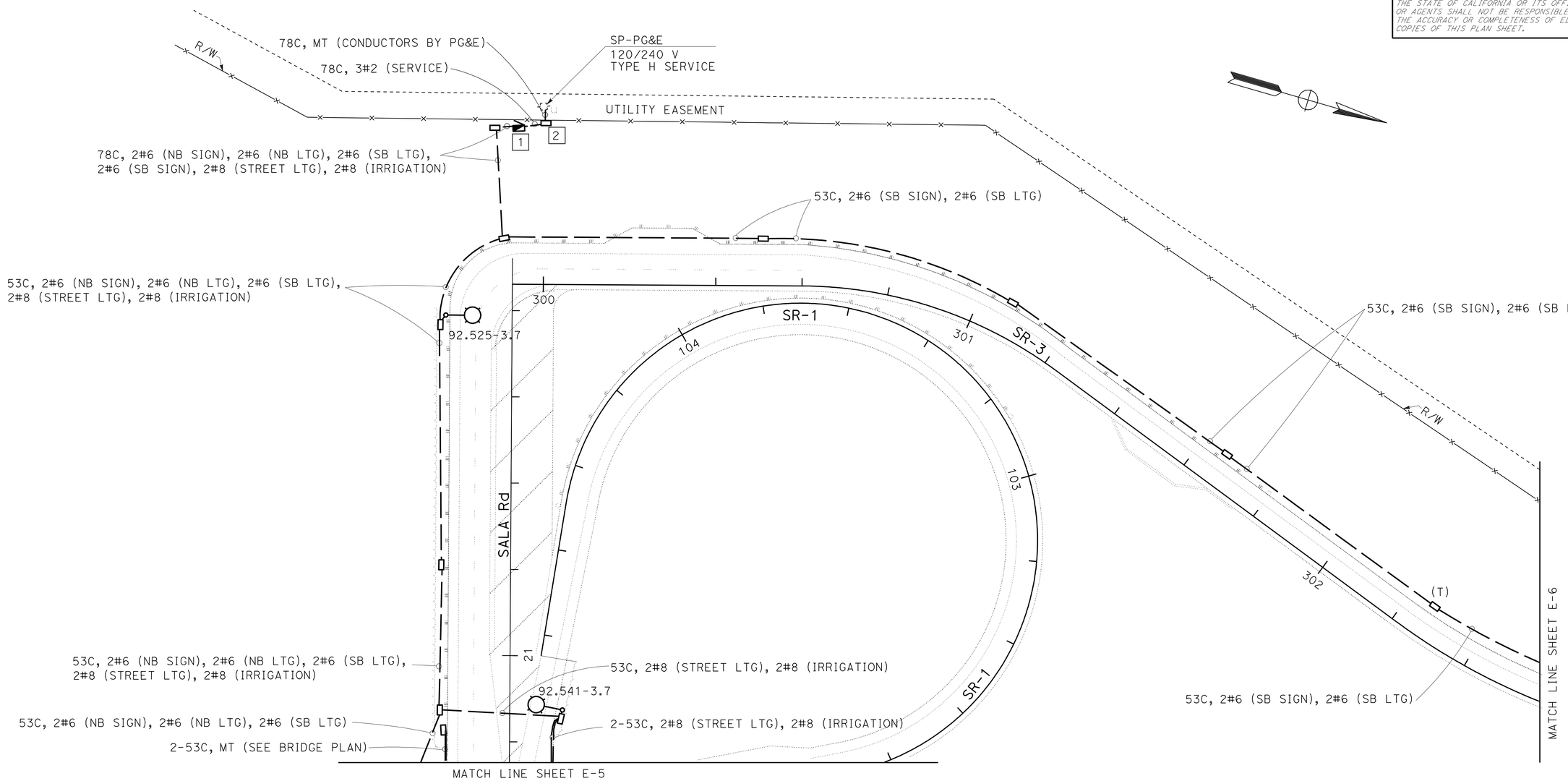

ALL DIMENSIONS ARE IN METERS UNLESS OTHERWISE SHOWN

LIGHTING AND SIGN ILLUMINATION ELECTRIC SERVICE (IRRIGATION)

SCALE 1:500

E-4

THIS PLAN IS ACCURATE FOR ELECTRICAL WORK ONLY.

STATE OF CALIFORNIA - DEPARTMENT OF TRANSPORTATION
Caltrans 06-ELECTRICAL DESIGN

FUNCTIONAL SUPERVISOR: ALI BAKHDOUD
CALCULATED-DESIGNED BY: KARIM ABDOLLAHIAN
CHECKED BY: DANIEL T. VO
REVISED BY / DATE REVISED

LAST REVISION 05-18-10
DATE PLOTTED => 03-AUG-2010
TIME PLOTTED => 10:14

Dist	COUNTY	ROUTE	KILOMETER POST TOTAL PROJECT	SHEET No.	TOTAL SHEETS
05	Mon	101	R146.8/159.7	1068	1402

Daniel Thanh Vo 5-20-10
REGISTERED ELECTRICAL ENGINEER DATE

7-26-10
PLANS APPROVAL DATE

REGISTERED PROFESSIONAL ENGINEER DANIEL THANH VO No. 17408 Exp. 9/30/10 ELECTRICAL STATE OF CALIFORNIA

THE STATE OF CALIFORNIA OR ITS OFFICERS OR AGENTS SHALL NOT BE RESPONSIBLE FOR THE ACCURACY OR COMPLETENESS OF ELECTRONIC COPIES OF THIS PLAN SHEET.

Caltrans Metric

NOTES:

1. REFER TO SHEET E-3 FOR NOTES.
2. FOR COMPLETE RIGHT OF WAY AND ACCURATE ACCESS DATA, SEE RIGHT OF WAY RECORD MAPS AT DISTRICT OFFICE.

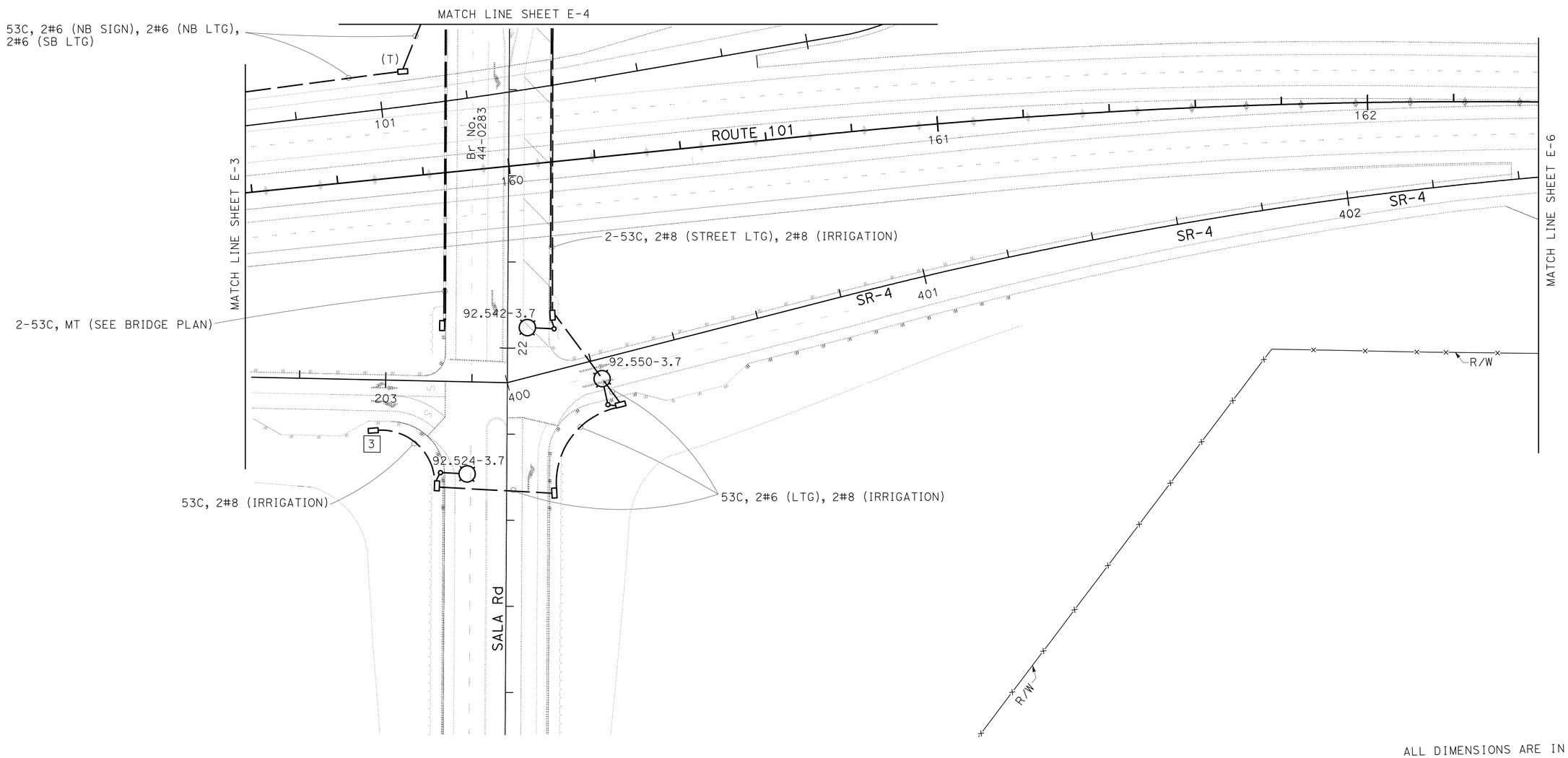

ALL DIMENSIONS ARE IN METERS UNLESS OTHERWISE SHOWN

LIGHTING AND SIGN ILLUMINATION
ELECTRIC SERVICE (IRRIGATION)

SCALE 1:500

E-5

THIS PLAN IS ACCURATE FOR ELECTRICAL WORK ONLY.

STATE OF CALIFORNIA - DEPARTMENT OF TRANSPORTATION
Caltrans 06-ELECTRICAL DESIGN

FUNCTIONAL SUPERVISOR: ALI BAKHDOUD
CALCULATED-DESIGNED BY: KARIM ABDOLLAHIAN
CHECKED BY: DANIEL T. VO
REVISED BY / DATE REVISED

LAST REVISION 05-18-10
DATE PLOTTED => 03-AUG-2010
TIME PLOTTED => 10:14

Dist	COUNTY	ROUTE	KILOMETER POST TOTAL PROJECT	SHEET No.	TOTAL SHEETS
05	Mon	101	R146.8/159.7	1069	1402

REGISTERED ELECTRICAL ENGINEER 5-20-10 DATE

7-26-10
PLANS APPROVAL DATE

REGISTERED PROFESSIONAL ENGINEER DANIEL THANH VO No. 17408 Exp. 9/30/10 ELECTRICAL STATE OF CALIFORNIA

THE STATE OF CALIFORNIA OR ITS OFFICERS OR AGENTS SHALL NOT BE RESPONSIBLE FOR THE ACCURACY OR COMPLETENESS OF ELECTRONIC COPIES OF THIS PLAN SHEET.

Caltrans Metric

NOTES:

1. REFER TO SHEET E-3 FOR NOTES.
2. FOR COMPLETE RIGHT OF WAY AND ACCURATE ACCESS DATA, SEE RIGHT OF WAY RECORD MAPS AT DISTRICT OFFICE.

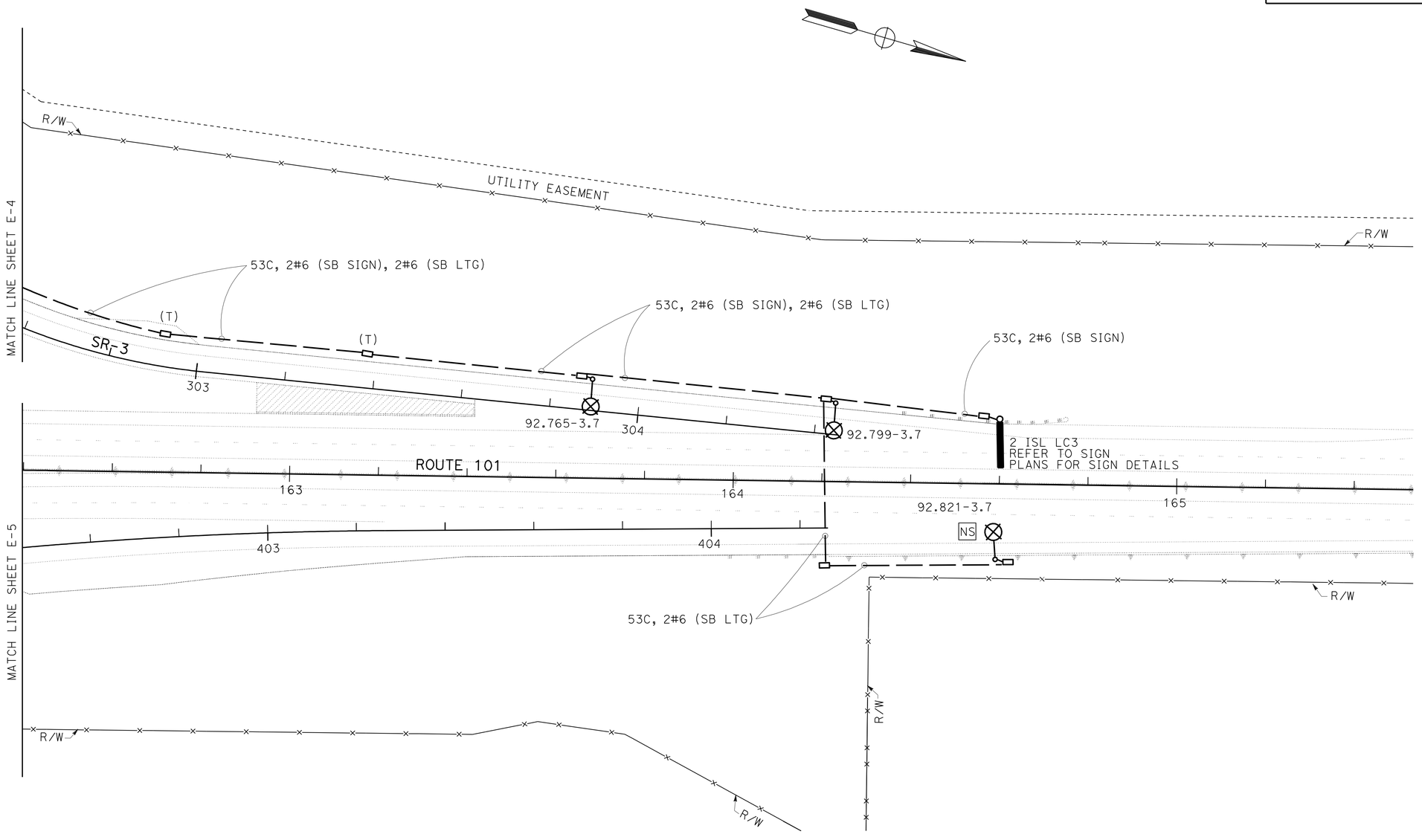

ALL DIMENSIONS ARE IN METERS UNLESS OTHERWISE SHOWN

LIGHTING AND SIGN ILLUMINATION

SCALE 1:500

E-6

THIS PLAN IS ACCURATE FOR ELECTRICAL WORK ONLY.

STATE OF CALIFORNIA - DEPARTMENT OF TRANSPORTATION
Caltrans 06-ELECTRICAL DESIGN

FUNCTIONAL SUPERVISOR: ALI BAKHDOUD
CALCULATED-DESIGNED BY: KARIM ABDOLLAHIAN
CHECKED BY: DANIEL T. VO
REVISED BY / DATE REVISED

LAST REVISION 05-18-10 | DATE PLOTTED => 10-AUG-2010 | TIME PLOTTED => 13:29

Dist	COUNTY	ROUTE	KILOMETER POST TOTAL PROJECT	SHEET No.	TOTAL SHEETS
05	Mon	101	R146.8/159.7	1070	1402

REGISTERED ELECTRICAL ENGINEER 5-20-10 DATE

7-26-10
PLANS APPROVAL DATE

REGISTERED PROFESSIONAL ENGINEER DANIEL THANH VO No. 17408 Exp. 9/30/10 ELECTRICAL STATE OF CALIFORNIA

THE STATE OF CALIFORNIA OR ITS OFFICERS OR AGENTS SHALL NOT BE RESPONSIBLE FOR THE ACCURACY OR COMPLETENESS OF ELECTRONIC COPIES OF THIS PLAN SHEET.

Caltrans Metric

NOTES: (FOR THIS SHEET ONLY)

1. 120/240 V, 1Ø, 3-WIRE, TYPE III-CF SERVICE EQUIPMENT ENCLOSURE WITH THE FOLLOWING CIRCUIT BREAKERS:

CTID No. 05441010094261T

AMPERES	VOLTS	POLES	NAME PLATE	METER	PHOTOELECTRIC CONTROL TYPE
100	240	2	MAIN BREAKER	YES	——
20	120	1	MVDS	YES	——
20	120	1	CCTV	YES	——
40	240	2	SPARE	YES	——
——	——	6	SPACE	YES	——

CTID No. 05441010094261L

AMPERES	VOLTS	POLES	NAME PLATE	METER	PHOTOELECTRIC CONTROL TYPE
100	240	2	MAIN BREAKER	YES	——
30	240	2	HIGHWAY LIGHTING	YES	IV
30	240	2	SPARE	YES	——
——	——	6	SPACE	YES	——

2. PULL BOX PER PG&E REQUIREMENTS.
3. MODEL 334 VIDEO CABINET AS SHOWN ON E-29.
4. TYPE CCTV 30 POLE WITH CAMERA ASSEMBLY AS SHOWN ON SHEETS E-29 AND SES-1, WITHOUT MVDS AND NEMA 3R ENCLOSURE.
5. TYPE VDS 30 POLE WITH MVDS AS SHOWN ON SHEETS E-29 AND SES-1.
6. 120/240 V, 3Ø, 4-WIRE, TYPE III-DF SERVICE EQUIPMENT ENCLOSURE WITH THE FOLLOWING CIRCUIT BREAKERS:

CTID No. 05441010094267G

AMPERES	VOLTS	POLES	NAME PLATE	METER	PHOTOELECTRIC CONTROL TYPE
100	240	3	MAIN BREAKER	YES	——
60	240	3	WPCPE	YES	——
20	120	1	ICC "M1"	YES	——
——	——	6	SPACE	YES	——

7. SEE SHEETS EE1-1 THROUGH EE1-3 FOR WELL PUMP ELECTRICAL SYSTEM.
8. FOR COMPLETE RIGHT OF WAY AND ACCURATE ACCESS DATA, SEE RIGHT OF WAY RECORD MAPS AT DISTRICT OFFICE.

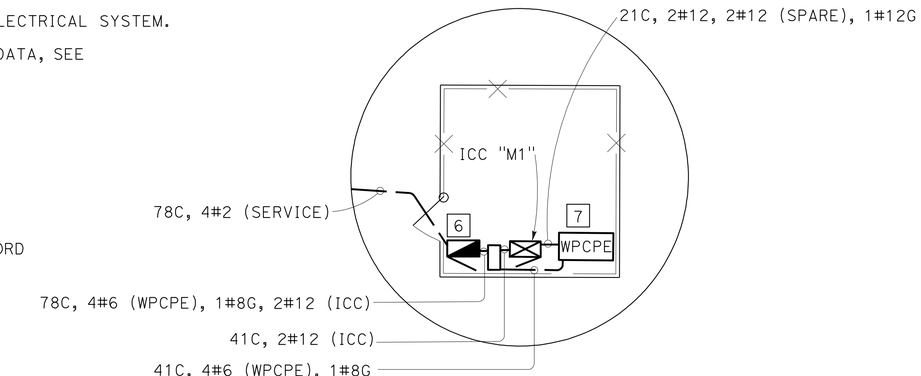

DETAIL B
NO SCALE

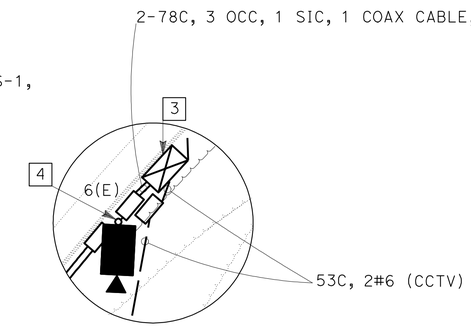

DETAIL A
NO SCALE

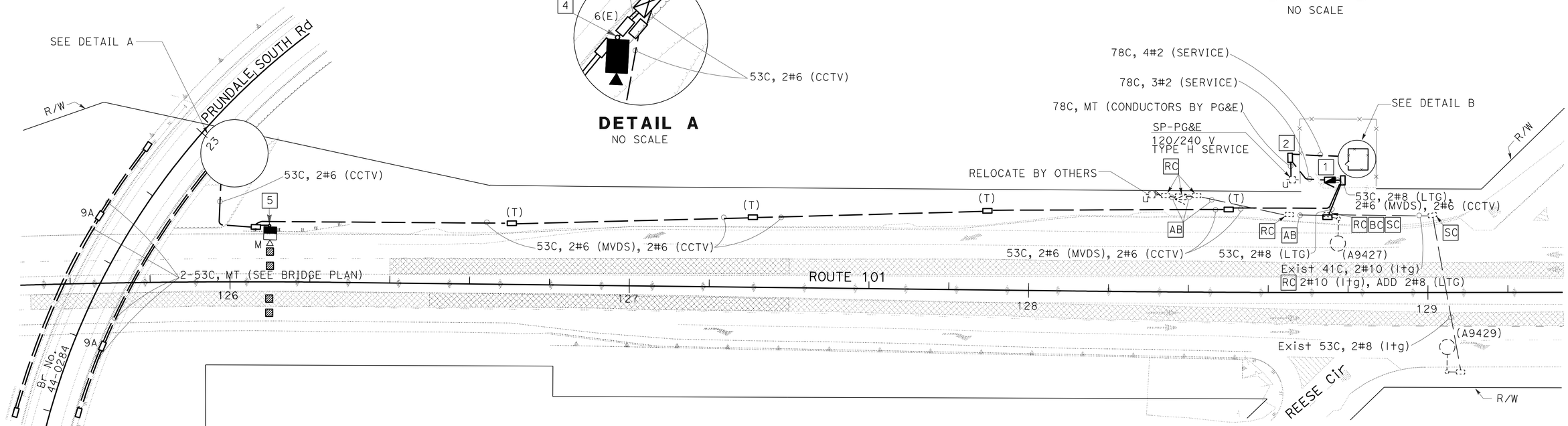

LIGHTING AND SIGN ILLUMINATION
CLOSED CIRCUIT TELEVISION SYSTEM
MICROWAVE VEHICLE DETECTION SYSTEM
ELECTRIC SERVICE (IRRIGATION)

SCALE 1:500

E-7

THIS PLAN IS ACCURATE FOR ELECTRICAL WORK ONLY.

ALL DIMENSIONS ARE IN METERS UNLESS OTHERWISE SHOWN

STATE OF CALIFORNIA - DEPARTMENT OF TRANSPORTATION
Caltrans 06-ELECTRICAL DESIGN

FUNCTIONAL SUPERVISOR: ALI BAKHDOUD
CALCULATED-DESIGNED BY: KARIM ABDOLLAHIAN
CHECKED BY: DANIEL T. VO
REVISED BY / DATE REVISED

LAST REVISION 05-18-10
DATE PLOTTED => 03-AUG-2010
TIME PLOTTED => 10:15

Dist	COUNTY	ROUTE	KILOMETER POST TOTAL PROJECT	SHEET No.	TOTAL SHEETS
05	Mon	101	R146.8/159.7	1071	1402

Caltrans Metric

REGISTERED ELECTRICAL ENGINEER — DATE 5-20-10

7-26-10
PLANS APPROVAL DATE

REGISTERED PROFESSIONAL ENGINEER DANIEL THANH VO No. 17408 Exp. 9/30/10 ELECTRICAL STATE OF CALIFORNIA

THE STATE OF CALIFORNIA OR ITS OFFICERS OR AGENTS SHALL NOT BE RESPONSIBLE FOR THE ACCURACY OR COMPLETENESS OF ELECTRONIC COPIES OF THIS PLAN SHEET.

NOTES: (FOR THIS SHEET ONLY)

1. 120/240 V, 1Ø, 3-WIRE, TYPE III-CF SERVICE EQUIPMENT ENCLOSURE WITH THE FOLLOWING CIRCUIT BREAKERS:

CTID No. 05441010097921T

AMPERES	VOLTS	POLES	NAME PLATE	METER	PHOTOELECTRIC CONTROL TYPE
100	240	2	MAIN BREAKER	YES	——
20	120	1	MVDS	YES	——
20	120	1	CCTV	YES	——
20	120	1	TDC	YES	——
40	240	2	SPARE	YES	——
——	——	6	SPACE	YES	——

CTID No. 05441010097921L

AMPERES	VOLTS	POLES	NAME PLATE	METER	PHOTOELECTRIC CONTROL TYPE
100	240	2	MAIN BREAKER	YES	——
30	240	2	HIGHWAY LIGHTING	YES	IV
30	240	2	SIGN ILLUMINATION	YES	LC3 SIGN CONTROL
40	240	2	SPARE	YES	——
——	——	6	SPACE	YES	——

2. MODEL 334 VIDEO CABINET AS SHOWN ON SHEET E-30.
3. TYPE B TELEPHONE DEMARCATION CABINET AS SHOWN ON SHEET E-30.
4. PULL BOX PER PG&E REQUIREMENTS.
5. CCTV 5 POLE EXTENSION ON SIGN STRUCTURE WITH CAMERA ASSEMBLY AND MVDS AS SHOWN ON SHEETS E-30 AND SES-3.
6. FOR COMPLETE RIGHT OF WAY AND ACCURATE ACCESS DATA, SEE RIGHT OF WAY RECORD MAPS AT DISTRICT OFFICE.

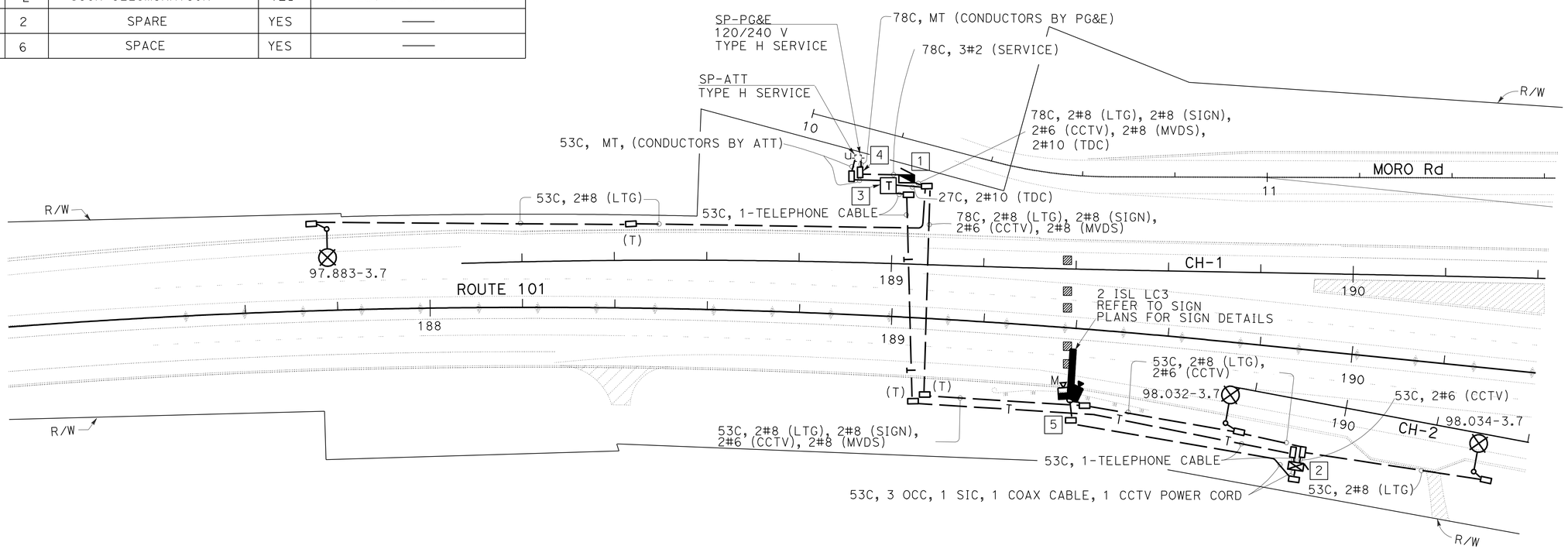

ALL DIMENSIONS ARE IN METERS UNLESS OTHERWISE SHOWN

LIGHTING AND SIGN ILLUMINATION
CLOSED CIRCUIT TELEVISION SYSTEM
MICROWAVE VEHICLE DETECTION SYSTEM

THIS PLAN IS ACCURATE FOR ELECTRICAL WORK ONLY.

SCALE 1:500

E-8

REVISED BY | DATE REVISED

KARIM ABDOLLAHIAN | DANIEL T. VO

CALCULATED-DESIGNED BY | CHECKED BY

FUNCTIONAL SUPERVISOR: ALI BAKHDOUD

STATE OF CALIFORNIA - DEPARTMENT OF TRANSPORTATION
Caltrans 06-ELECTRICAL DESIGN

LAST REVISION 05-18-10 | DATE PLOTTED => 10-AUG-2010 | TIME PLOTTED => 13:30

Dist	COUNTY	ROUTE	KILOMETER POST TOTAL PROJECT	SHEET No.	TOTAL SHEETS
05	Mon	101	R146.8/159.7	1072	1402

REGISTERED ELECTRICAL ENGINEER — DATE 5-20-10

7-26-10
PLANS APPROVAL DATE

REGISTERED PROFESSIONAL ENGINEER — DANIEL THANH VO — No. 17408 — Exp. 9/30/10 — ELECTRICAL — STATE OF CALIFORNIA

THE STATE OF CALIFORNIA OR ITS OFFICERS OR AGENTS SHALL NOT BE RESPONSIBLE FOR THE ACCURACY OR COMPLETENESS OF ELECTRONIC COPIES OF THIS PLAN SHEET.

Caltrans Metric

NOTES: (FOR THIS SHEET ONLY)

1. 120/240 V, 1Ø, 3-WIRE, TYPE III-BF SERVICE EQUIPMENT ENCLOSURE WITH THE FOLLOWING CIRCUIT BREAKERS:

CTID No. 05441010098357L

AMPERES	VOLTS	POLES	NAME PLATE	METER	PHOTOELECTRIC CONTROL TYPE
100	240	2	MAIN BREAKER	YES	——
30	240	2	HIGHWAY LIGHTING	YES	IV
40	240	2	SPARE	YES	——
——	——	6	SPACE	YES	——

2. PULL BOX PER PG&E REQUIREMENTS.

3. 120/240 V, 3Ø, 4-WIRE, TYPE III-DF SERVICE EQUIPMENT ENCLOSURE WITH THE FOLLOWING CIRCUIT BREAKERS:

CTID No. 05441010098357G

AMPERES	VOLTS	POLES	NAME PLATE	METER	PHOTOELECTRIC CONTROL TYPE
100	240	3	MAIN BREAKER	YES	——
60	240	3	BPCPE	YES	——
20	120	1	ICC "M2"	YES	——
——	——	6	SPACE	YES	——

4. SEE SHEET EE2-1 THROUGH SHEET EE2-3 FOR BOOSTER PUMP ELECTRICAL SYSTEM.

5. PREFORMED INDUCTIVE LOOP FOR FUTURE USE.

6. FOR COMPLETE RIGHT OF WAY AND ACCURATE ACCESS DATA, SEE RIGHT OF WAY RECORD MAPS AT DISTRICT OFFICE.

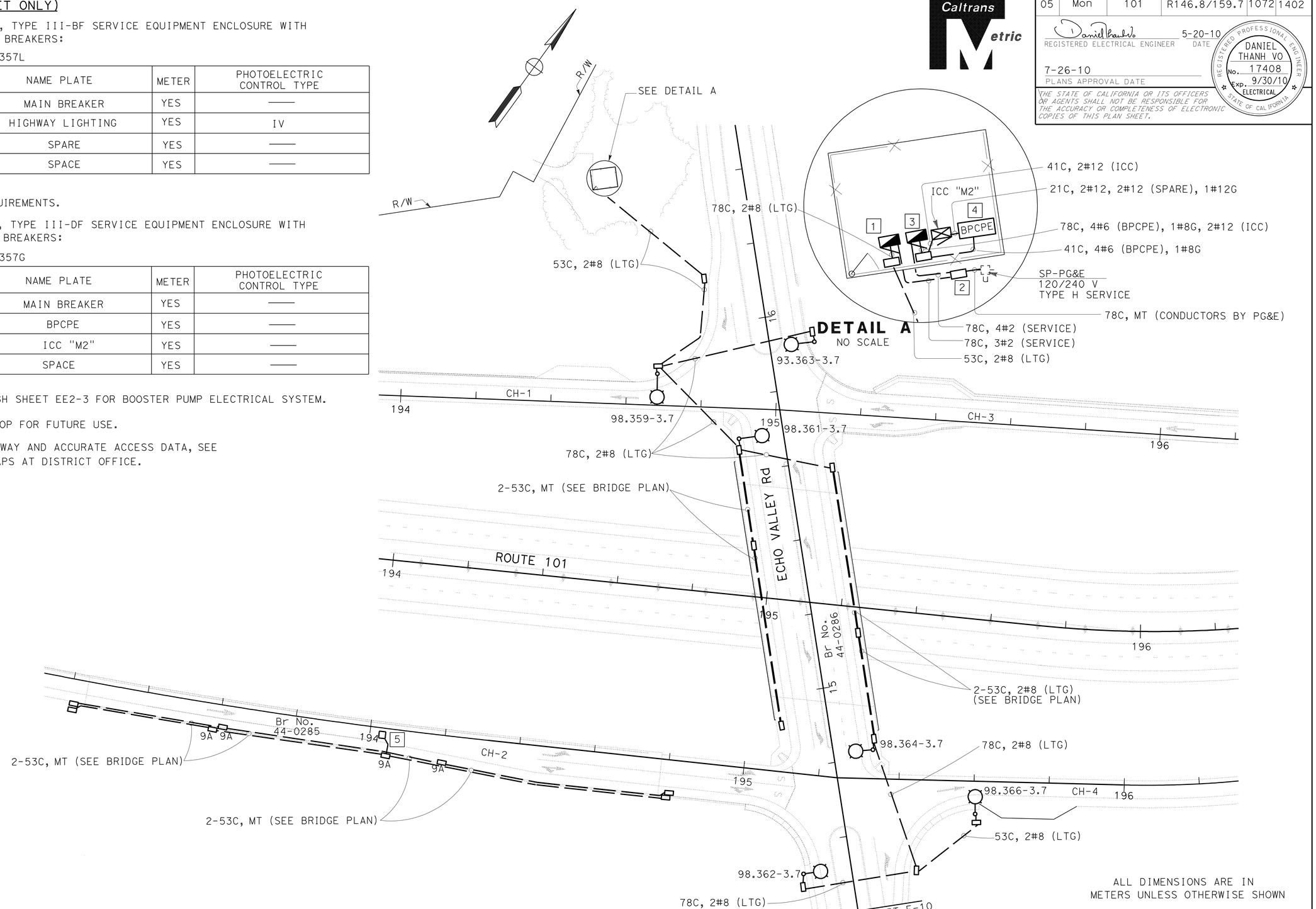

ALL DIMENSIONS ARE IN METERS UNLESS OTHERWISE SHOWN

ELECTRIC SERVICE (IRRIGATION) LIGHTING AND SIGN ILLUMINATION

SCALE 1:500

E-9

THIS PLAN IS ACCURATE FOR ELECTRICAL WORK ONLY.

STATE OF CALIFORNIA - DEPARTMENT OF TRANSPORTATION
Caltrans 06-ELECTRICAL DESIGN

FUNCTIONAL SUPERVISOR: ALI BAKHDOUD
CALCULATED-DESIGNED BY: KARIM ABDOLLAHIAN
CHECKED BY: DANIEL T. VO
REVISED BY / DATE REVISED

LAST REVISION 05-18-10
DATE PLOTTED => 03-AUG-2010
TIME PLOTTED => 10:15

Dist	COUNTY	ROUTE	KILOMETER POST TOTAL PROJECT	SHEET No.	TOTAL SHEETS
05	Mon	101	R146.8/159.7	1073	1402

REGISTERED ELECTRICAL ENGINEER — DATE: 5-20-10

7-26-10
PLANS APPROVAL DATE

REGISTERED PROFESSIONAL ENGINEER — DANIEL THANH VO — No. 17408 — Exp. 9/30/10 — ELECTRICAL — STATE OF CALIFORNIA

THE STATE OF CALIFORNIA OR ITS OFFICERS OR AGENTS SHALL NOT BE RESPONSIBLE FOR THE ACCURACY OR COMPLETENESS OF ELECTRONIC COPIES OF THIS PLAN SHEET.

Caltrans Metric

NOTE: (FOR THIS SHEET ONLY)

1. FOR COMPLETE RIGHT OF WAY AND ACCURATE ACCESS DATA, SEE RIGHT OF WAY RECORD MAPS AT DISTRICT OFFICE.

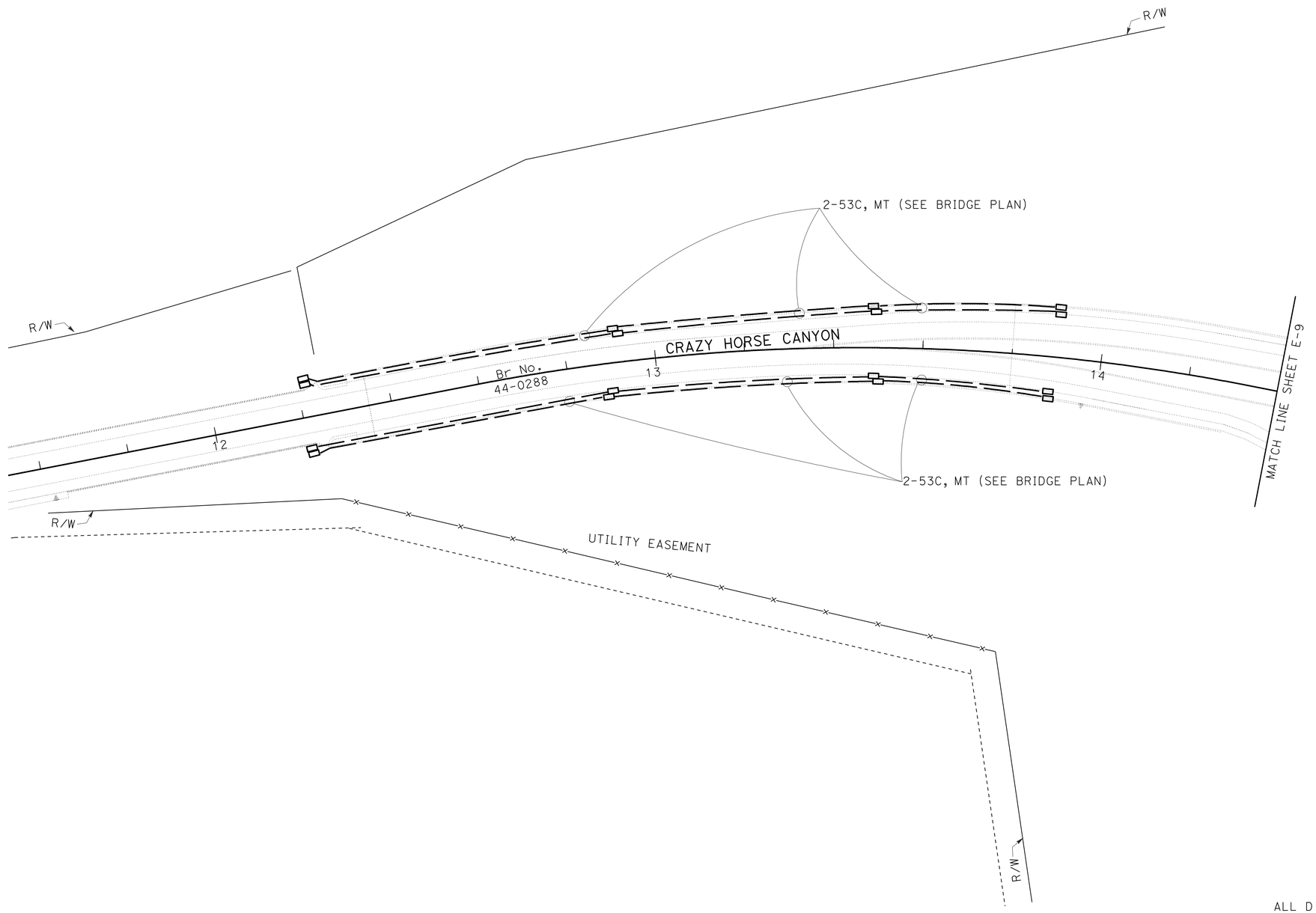

ALL DIMENSIONS ARE IN METERS UNLESS OTHERWISE SHOWN

THIS PLAN IS ACCURATE FOR ELECTRICAL WORK ONLY.

LIGHTING AND SIGN ILLUMINATION

SCALE 1:500

E-10

CALCULATED-DESIGNED BY	KARIM ABDOLLAHIAN
CHECKED BY	DANIEL T. VO
FUNCTIONAL SUPERVISOR	ALI BAKHDOUD
REVISED BY	
DATE REVISED	

STATE OF CALIFORNIA - DEPARTMENT OF TRANSPORTATION
Caltrans 06-ELECTRICAL DESIGN

LAST REVISION 05-18-10 | DATE PLOTTED => 03-AUG-2010 | TIME PLOTTED => 10:16

Dist	COUNTY	ROUTE	KILOMETER POST TOTAL PROJECT	SHEET No.	TOTAL SHEETS
05	Mon	101	R146.8/159.7	1074	1402

Caltrans Metric

REGISTERED ELECTRICAL ENGINEER — DATE 5-20-10

7-26-10
PLANS APPROVAL DATE

REGISTERED PROFESSIONAL ENGINEER DANIEL THANH VO No. 17408 Exp. 9/30/10 ELECTRICAL STATE OF CALIFORNIA

THE STATE OF CALIFORNIA OR ITS OFFICERS OR AGENTS SHALL NOT BE RESPONSIBLE FOR THE ACCURACY OR COMPLETENESS OF ELECTRONIC COPIES OF THIS PLAN SHEET.

NOTES: (FOR THIS SHEET ONLY)

1. 120/240 V, 1Ø, 3-WIRE, TYPE III-BF SERVICE EQUIPMENT ENCLOSURE WITH THE FOLLOWING CIRCUIT BREAKERS:

CTID No. 05441010098637L

AMPERES	VOLTS	POLES	NAME PLATE	METER	PHOTOELECTRIC CONTROL TYPE
100	240	2	MAIN BREAKER	YES	——
30	240	2	HIGHWAY LIGHTING	YES	IV
30	240	2	SIGN ILLUMINATION	YES	LC3 SIGN CONTROL
40	240	2	SPARE	YES	——
——	——	6	SPACE	YES	——

2. PULL BOX PER PG&E REQUIREMENTS.
3. THE CONTRACTOR SHALL COORDINATE WITH PG&E FOR SERVICE DISCONNECTION.
4. FOR COMPLETE RIGHT OF WAY AND ACCURATE ACCESS DATA, SEE RIGHT OF WAY RECORD MAPS AT DISTRICT OFFICE.

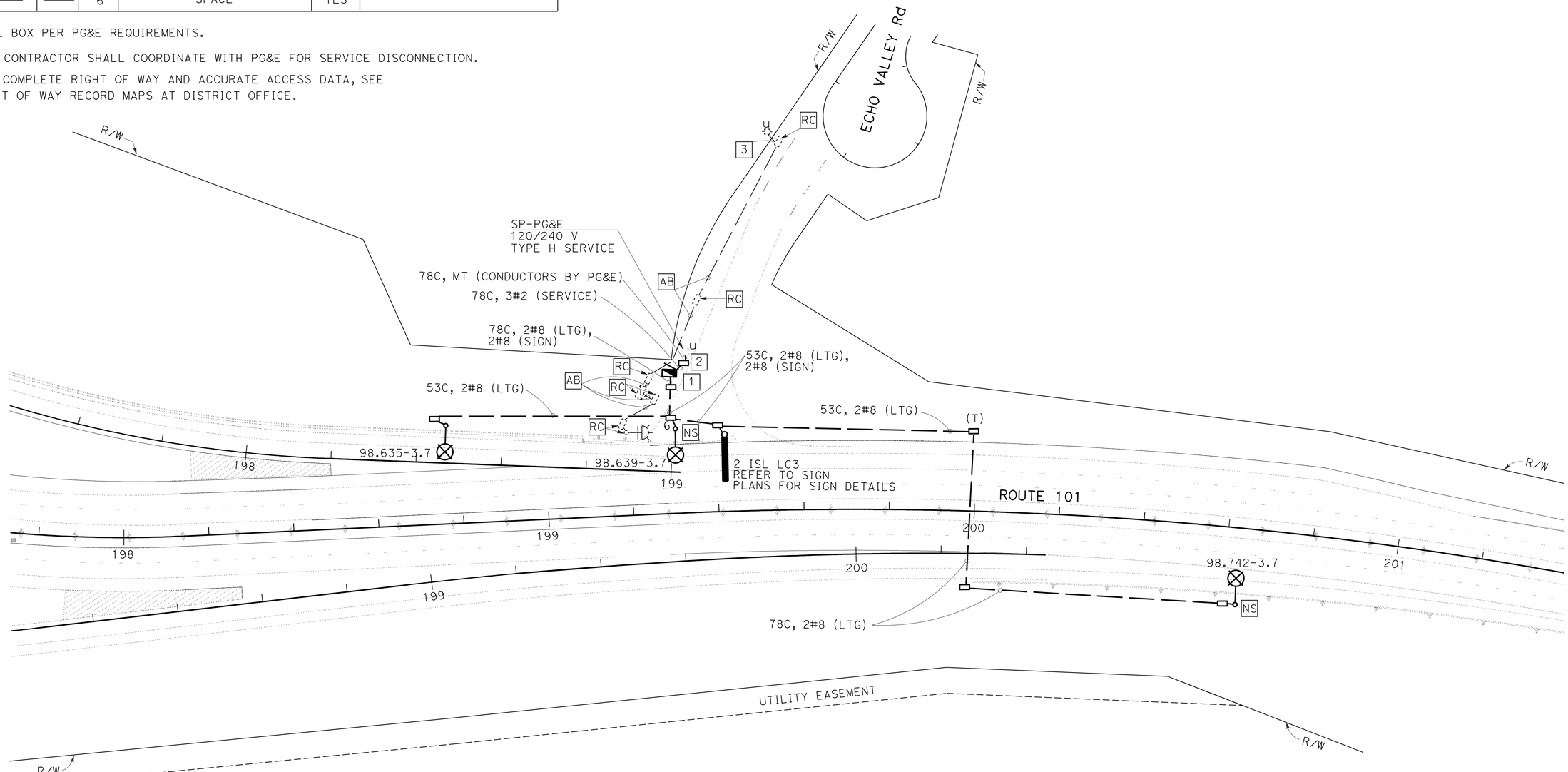

ALL DIMENSIONS ARE IN METERS UNLESS OTHERWISE SHOWN

LIGHTING AND SIGN ILLUMINATION

SCALE 1:500

E-11

THIS PLAN IS ACCURATE FOR ELECTRICAL WORK ONLY.

KARIM ABDOLLAHIAN — REVISED BY — DATE REVISED
DANIEL T. VO — CALCULATED-DESIGNED BY — CHECKED BY
ALI BAKHDOUD — FUNCTIONAL SUPERVISOR

STATE OF CALIFORNIA - DEPARTMENT OF TRANSPORTATION
Caltrans 06-ELECTRICAL DESIGN

LAST REVISION 05-18-10 | DATE PLOTTED => 10-AUG-2010 | TIME PLOTTED => 13:30

Dist	COUNTY	ROUTE	KILOMETER POST TOTAL PROJECT	SHEET No.	TOTAL SHEETS
05	Mon	101	R146.8/159.7	1075	1402

REGISTERED ELECTRICAL ENGINEER — DATE 5-20-10

7-26-10
PLANS APPROVAL DATE

REGISTERED PROFESSIONAL ENGINEER DANIEL THANH VO No. 17408 Exp. 9/30/10 ELECTRICAL STATE OF CALIFORNIA

THE STATE OF CALIFORNIA OR ITS OFFICERS OR AGENTS SHALL NOT BE RESPONSIBLE FOR THE ACCURACY OR COMPLETENESS OF ELECTRONIC COPIES OF THIS PLAN SHEET.

Caltrans Metric

NOTES: (FOR SHEETS E-12 AND E-13)

1. 120/240 V, 1Ø, 3-WIRE, TYPE III-BF SERVICE EQUIPMENT ENCLOSURE WITH THE FOLLOWING CIRCUIT BREAKERS:

CITY SERVICE

AMPERES	VOLTS	POLES	NAME PLATE	METER	PHOTOELECTRIC CONTROL TYPE
100	240	2	MAIN BREAKER	YES	——
60	120	1	TRAFFIC SIGNAL	YES	——
20	240	2	LIGHTING	YES	IV
20	120	1	SPARE	YES	——
40	240	2	SPARE	YES	——
——	——	6	SPACE	——	——

2. STATE-FURNISHED MODEL 2070 CONTROLLER ASSEMBLY WITH BATTERY BACKUP SYSTEM.
3. PULL BOX PER PG&E REQUIREMENTS.
4. No. 5 PULL BOX AS NECESSARY TO MAINTAIN 60 m MAXIMUM SPACING.
5. 85 m TO LIMIT LINE.
6. INSTALL G8 (CA) SNS ON SIGNAL POLE. REFER TO SIGN PLANS FOR SIGN DETAILS.
7. INSTALL R73-5 (CA) SIGN ON SMA. REFER TO SIGN PLANS FOR SIGN DETAILS.

POLE AND EQUIPMENT SCHEDULE

	STANDARD			VEH SIG MTG		PED SIG MTG	PPB		HPS LUM	NOTE
No.	TYPE	SMA	LMA	MAST ARM	POLE		Ø	ARROW		
A	26-4-161	13.7	4.6	MAS MAS	SV-1-T	SP-1-T	2	←	200 W	F=7.4 [6] [7]
B	15 TS		4.6		SV-2-T	SP-1-T	4	→	200 W	
C	18-2-161	6.1		MAS	SV-1-T					[7]
D	24-3-161	10.7	4.6	MAS	SV-1-T	SP-1-T	4	←	200 W	[6]
E	1-A				TV-2-T	SP-1-T	6	→		
F	29-5-161	15.2	4.6	MAS MAS	SV-1-T	SP-1-T	6	←	200 W	F=8.3 [6] [7]
G	15 TS		4.6		SV-2-T	SP-1-T	8	→	200 W	
H	61-5-161	18.2	4.6	MAS MAS	SV-1-T	SP-1-T	8	←	200 W	F=7.7 [6] [7]
I	1-A				TV-2-T	SP-1-T	2	→		

CONDUIT AND CONDUCTOR SCHEDULE

CONDUCTOR DESIGNATION			CONDUIT RUN NUMBER AND SIZE										
CABLE TYPE	POLE	PHASE	1	2	3	4	5	6	7	8	9	10	11
			2-103	103	103	103	103	103	103	103	103	103	103 MT
VEH-PED 12CSC	A	4,7,4P / 2	1 / 1	1 / 1									
	B	1,2,2P / 4	1 / 1	1 / 1	1 / 1								
	C	1	1	1	1	1							
	D	6,6P / 4	1 / 1	1 / 1	1 / 1	1 / 1	1 / 1						
	E	3,4,4P / 6	1 / 1	1 / 1	1 / 1	1 / 1	1 / 1	1 / 1					
PPB 3CSC	F	3,8,8P / 6	1 / 1						1 / 1	1 / 1	1 / 1	1 / 1	
	G	5,6,6P / 8	1 / 1						1 / 1	1 / 1	1 / 1		
	H	2,5,2P / 8	1 / 1						1 / 1	1 / 1			
	I	7,8,8P / 2	1 / 1						1 / 1				
	TOTAL		9 / 8	5 / 4	4 / 3	3 / 2	2 / 1	1 / 1	4 / 4	3 / 3	2 / 2	1 / 1	0 / 0
AWG	CIRCUIT												
#8	LIGHTING			2	2	2	2		2	2	2	2	
	SIC		1	1	1								
DLC		PHASE											
		Ø1	2						2	2	2		
		Ø2	3	3	3								
		Ø2 ADV	1	1	1								
		Ø3	2						2				
		Ø4	3	3	3	3	3	3					
		Ø4 ADV	1	1	1	1	1	1					
		Ø5	2	2	2								
		Ø6	3						3	3	3		
		Ø6 ADV	1						1	1	1		
		Ø7	2	2	2	2	2	2					
		Ø8	2						2				
		Ø8 ADV	1						1				
		TOTAL	23	12	12	6	6	6	11	6	6	0	0

ALL DIMENSIONS ARE IN METERS UNLESS OTHERWISE SHOWN

SIGNAL AND LIGHTING
(CITY STREET LOCATION 1)

NO SCALE

E-12

THIS PLAN IS ACCURATE FOR ELECTRICAL WORK ONLY

STATE OF CALIFORNIA - DEPARTMENT OF TRANSPORTATION
Caltrans 06-ELECTRICAL DESIGN

FUNCTIONAL SUPERVISOR: ALI BAKHDOUD
CALCULATED-DESIGNED BY: KARIM ABDOLLAHIAN
CHECKED BY: DANIEL T. VO
REVISED BY / DATE REVISED

LAST REVISION 05-18-10 | DATE PLOTTED => 03-AUG-2010 | TIME PLOTTED => 10:16

Dist	COUNTY	ROUTE	KILOMETER POST TOTAL PROJECT	SHEET No.	TOTAL SHEETS
05	Mon	101	R146.8/159.7	1076	1402

REGISTERED ELECTRICAL ENGINEER — DATE: 5-20-10

7-26-10
PLANS APPROVAL DATE

REGISTERED PROFESSIONAL ENGINEER — DANIEL THANH VO — No. 17408 — Exp. 9/30/10 — ELECTRICAL — STATE OF CALIFORNIA

THE STATE OF CALIFORNIA OR ITS OFFICERS OR AGENTS SHALL NOT BE RESPONSIBLE FOR THE ACCURACY OR COMPLETENESS OF ELECTRONIC COPIES OF THIS PLAN SHEET.

Caltrans Metric

NOTES:

1. FOR NOTES AND SCHEDULE REFER TO SHEET E-12.
2. FOR COMPLETE RIGHT OF WAY AND ACCURATE ACCESS DATA, SEE RIGHT OF WAY RECORD MAPS AT DISTRICT OFFICE.

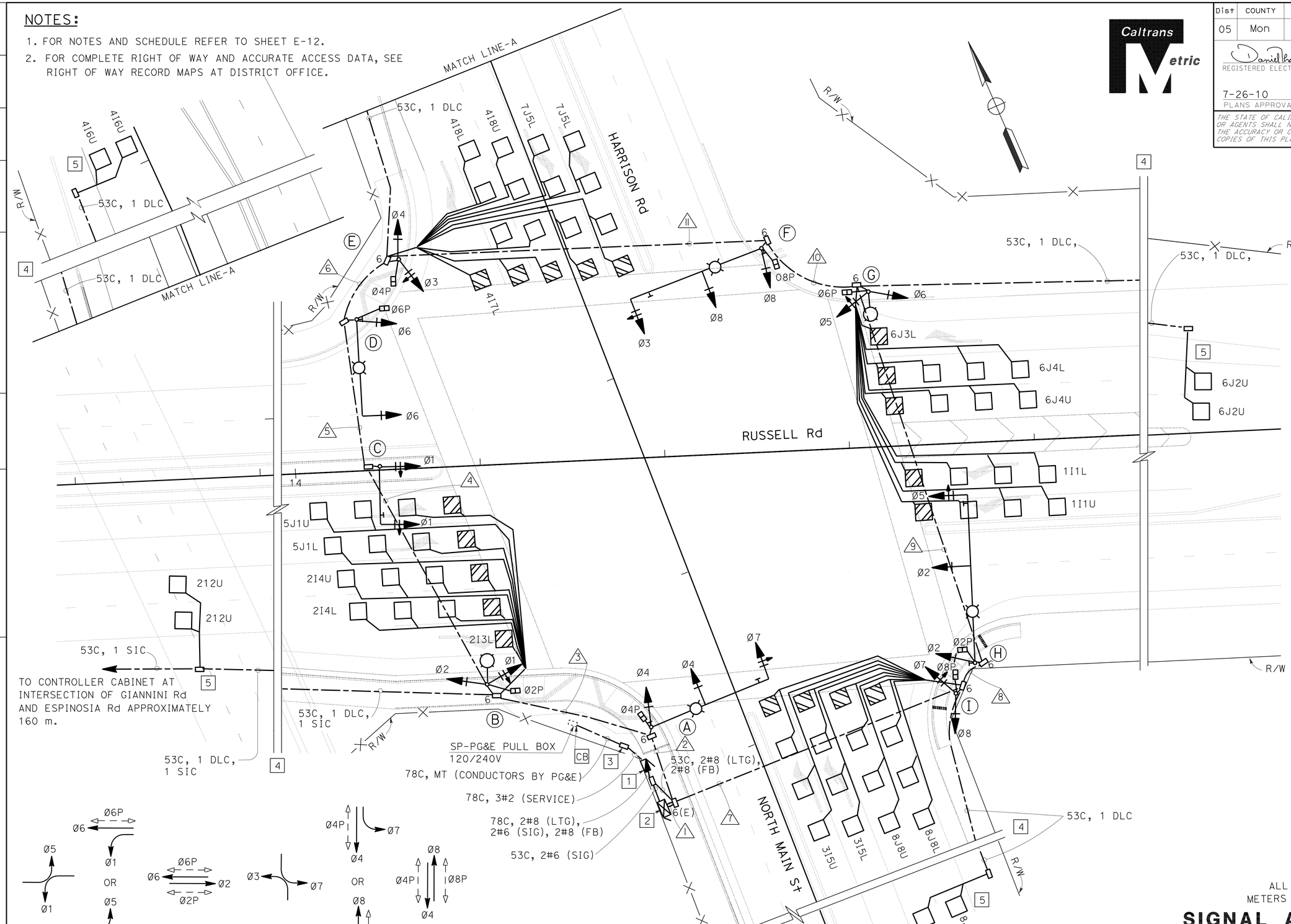

THIS PLAN IS ACCURATE FOR ELECTRICAL WORK ONLY

ALL DIMENSIONS ARE IN METERS UNLESS OTHERWISE SHOWN

SIGNAL AND LIGHTING (CITY STREET LOCATION 1)

SCALE 1:200

E-13

STATE OF CALIFORNIA - DEPARTMENT OF TRANSPORTATION
Caltrans 06-ELECTRICAL DESIGN

FUNCTIONAL SUPERVISOR: ALI BAKHDOUD
CALCULATED-DESIGNED BY: KARIM ABDOLLAHIAN
CHECKED BY: DANIEL T. VO
REVISED BY / DATE REVISED

LAST REVISION 05-18-10 | DATE PLOTTED => 03-AUG-2010 | TIME PLOTTED => 10:16

BORDER LAST REVISED 3/1/2007 | RELATIVE BORDER SCALE IS IN MILLIMETERS 0 20 40 60 80 | USERNAME => trcarol | DGN FILE => 50161eua013.dgn | CU 06391 | EA 0161E1

Dist	COUNTY	ROUTE	KILOMETER POST TOTAL PROJECT	SHEET No.	TOTAL SHEETS
05	Mon	101	R146.8/159.7	1077	1402

REGISTERED ELECTRICAL ENGINEER — DATE 5-20-10

7-26-10
PLANS APPROVAL DATE

REGISTERED PROFESSIONAL ENGINEER — DANIEL THANH VO — No. 17408 — Exp. 9/30/10 — ELECTRICAL — STATE OF CALIFORNIA

THE STATE OF CALIFORNIA OR ITS OFFICERS OR AGENTS SHALL NOT BE RESPONSIBLE FOR THE ACCURACY OR COMPLETENESS OF ELECTRONIC COPIES OF THIS PLAN SHEET.

NOTES:(FOR SHEETS E-14 AND E-15)

1. 120/240 V, 1Ø, 3-WIRE, TYPE III-BF SERVICE EQUIPMENT ENCLOSURE WITH THE FOLLOWING CIRCUIT BREAKERS:

CITY SERVICE

AMPERES	VOLTS	POLES	NAME PLATE	METER	PHOTOELECTRIC CONTROL TYPE
100	240	2	MAIN BREAKER	YES	——
60	120	1	TRAFFIC SIGNAL	YES	——
20	240	2	LIGHTING	YES	IV
20	120	1	FLASHING BEACON	YES	——
40	240	2	SPARE	YES	——
——	——	6	SPACE	——	——

2. STATE-FURNISHED MODEL 2070 CONTROLLER ASSEMBLY WITH BATTERY BACKUP SYSTEM.
3. PULL BOX PER PG&E REQUIREMENTS.
4. No. 5 PULL BOX AS NECESSARY TO MAINTAIN 60 m MAXIMUM SPACING.
5. 85 m TO LIMIT LINE.
6. 200 m TO LIMIT LINE.
7. 70 m TO LIMIT LINE.
8. 90 m TO LIMIT LINE.
9. INSTALL D3 SNS ON SIGNAL POLE. REFER TO SIGN PLANS FOR SIGN DETAILS.
10. INSTALL R73-3 (CA) SIGN ON SMA. REFER TO SIGN PLANS FOR SIGN DETAILS.
11. INSTALL R9-3A AND R9-3B SIGNS ON SIGNAL POLE. REFER TO SIGN PLANS FOR SIGN DETAILS.

CONDUIT AND CONDUCTOR SCHEDULE

CONDUCTOR DESIGNATION			CONDUIT RUN NUMBER AND SIZE							
CABLE TYPE	POLE	PHASE	1	2	3	4	5	6	7	8
			2-103	103	103	103	103 MT	103	103	103
VEH-PED 12CSC	A	2,4	2	2						
	B	6,6P	1	1	1					
	C	4 / 6	1 / 1	1 / 1	1 / 1	1 / 1				
	D	4P / 6	1 / 1					1 / 1	1 / 1	1 / 1
	E	5,6,6P / 4	1 / 1					1 / 1	1 / 1	
PPB 3CSC	F	2,5,4P / 4	1 / 1					1 / 1		
	TOTAL		7 / 4	4 / 1	2 / 1	1 / 1	0 / 0	3 / 3	2 / 2	1 / 1
AWG	CIRCUIT									
#8	LIGHTING			2	2			2	2	2
#8	FB			2	2	2				
	SIC		1					1		
DLC	PHASE									
	Ø2		2	2						
	Ø2 ADV		1	1						
	Ø4		1	1	1	1				
	Ø4 ADV		1	1	1	1				
	Ø5		1	1						
	Ø6		3					3	3	
	Ø6 ADV		1					1	1	
	TOTAL		10	6	2	2	0	4	4	0

POLE AND EQUIPMENT SCHEDULE

No.	STANDARD TYPE	STANDARD SMA	STANDARD LMA	VEH SIG MTG MAST ARM	VEH SIG MTG POLE	PED SIG MTG	PPB Ø	PPB ARROW	HPS LUM	NOTE
A	19-3-161	9.1	3.7	MAS	SV-2-T				200 W	11 9
B	24-4-161	10.7	3.7	MAS	SV-1-T	SP-1-T			200 W	11 9
C	1-A				TV-1-T		6	→		
D	15 TS		4.6			SP-1-T	6	←	200 W	
E	1-A				TV-2-T	SP-1-T	4	→		
F	61-5-161	18.2	4.6	MAS MAS	SV-1-T	SP-1-T	4	←	200 W	F=10.1 10 9

ALL DIMENSIONS ARE IN METERS UNLESS OTHERWISE SHOWN

THIS PLAN IS ACCURATE FOR ELECTRICAL WORK ONLY

SIGNAL AND LIGHTING
(CITY STREET LOCATION 2)

NO SCALE

E-14

STATE OF CALIFORNIA - DEPARTMENT OF TRANSPORTATION
Caltrans 06-ELECTRICAL DESIGN

FUNCTIONAL SUPERVISOR: ALI BAKHDOUD
CALCULATED-DESIGNED BY: KARIM ABDOLLAHIAN
CHECKED BY: DANIEL T. VO
REVISED BY / DATE REVISED

LAST REVISION 05-18-10 | DATE PLOTTED => 03-AUG-2010 | TIME PLOTTED => 10:17

Dist	COUNTY	ROUTE	KILOMETER POST TOTAL PROJECT	SHEET No.	TOTAL SHEETS
05	Mon	101	R146.8/159.7	1078	1402

Caltrans Metric

REGISTERED ELECTRICAL ENGINEER — DATE 5-20-10

7-26-10
PLANS APPROVAL DATE

REGISTERED PROFESSIONAL ENGINEER — DANIEL THANH VO — No. 17408 — Exp. 9/30/10 — ELECTRICAL — STATE OF CALIFORNIA

THE STATE OF CALIFORNIA OR ITS OFFICERS OR AGENTS SHALL NOT BE RESPONSIBLE FOR THE ACCURACY OR COMPLETENESS OF ELECTRONIC COPIES OF THIS PLAN SHEET.

NOTES:

1. FOR NOTES AND SCHEDULE REFER TO SHEET E-14.
2. FOR COMPLETE RIGHT OF WAY AND ACCURATE ACCESS DATA, SEE RIGHT OF WAY RECORD MAPS AT DISTRICT OFFICE.

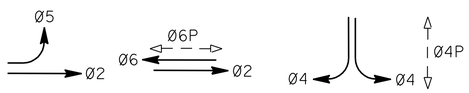

PHASE DIAGRAM
STEADY DEMAND SEQUENCE

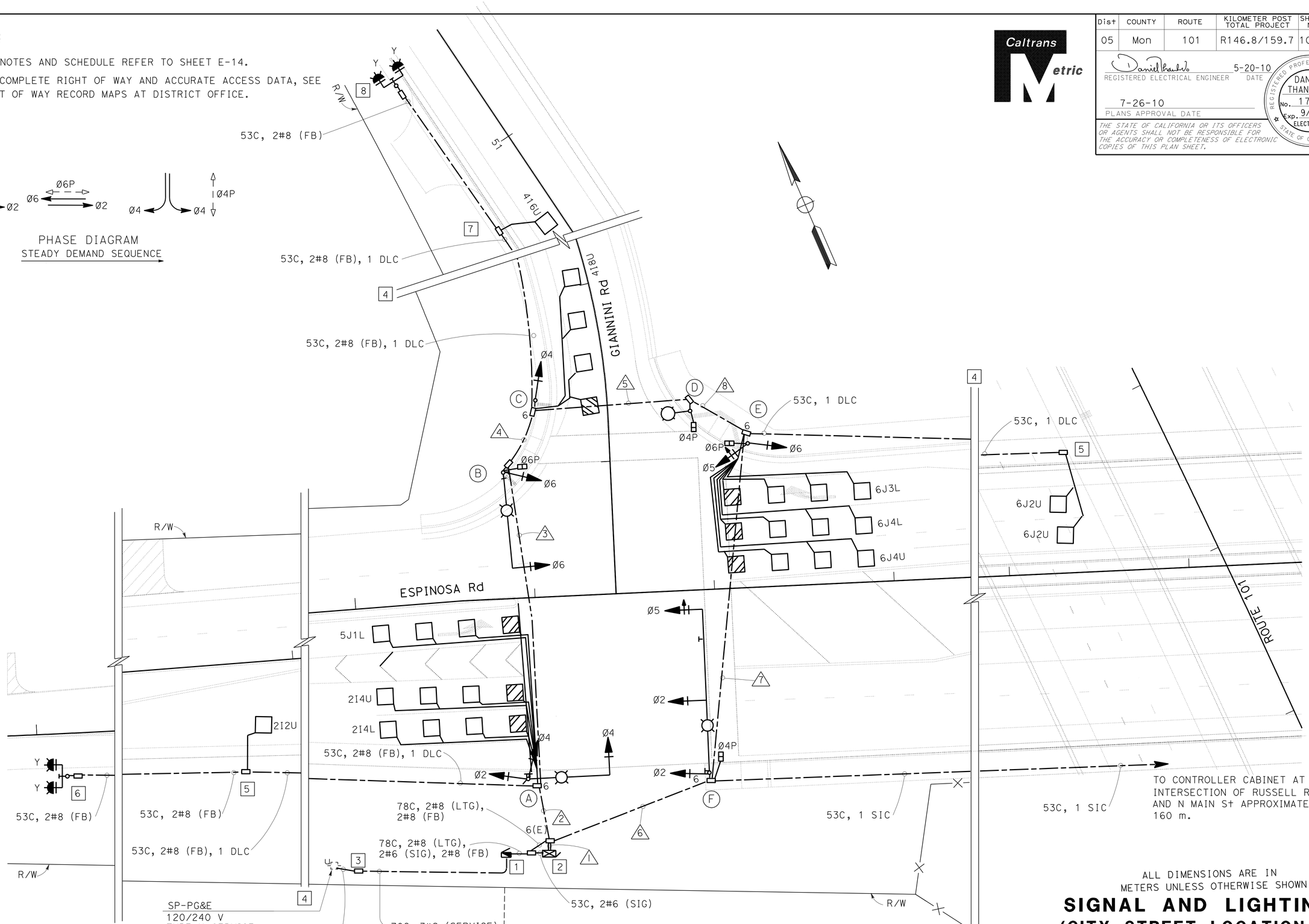

THIS PLAN IS ACCURATE FOR ELECTRICAL WORK ONLY

ALL DIMENSIONS ARE IN METERS UNLESS OTHERWISE SHOWN

SIGNAL AND LIGHTING (CITY STREET LOCATION 2)

SCALE 1:200

E-15

REVISED BY	DATE REVISED

CALCULATED-DESIGNED BY: KARIM ABDOLLAHIAN
CHECKED BY: DANIEL T. VO
FUNCTIONAL SUPERVISOR: ALI BAKHDOUD

STATE OF CALIFORNIA - DEPARTMENT OF TRANSPORTATION
Caltrans 06-ELECTRICAL DESIGN

LAST REVISION 05-18-10 | DATE PLOTTED => 03-AUG-2010 | TIME PLOTTED => 09:53

Dist	COUNTY	ROUTE	KILOMETER POST TOTAL PROJECT	SHEET No.	TOTAL SHEETS
05	Mon	101	R146.8/159.7	1079	1402

Caltrans Metric

REGISTERED ELECTRICAL ENGINEER — DATE 5-20-10

PLANS APPROVAL DATE 7-26-10

REGISTERED PROFESSIONAL ENGINEER DANIEL THANH VO No. 17408 Exp. 9/30/10 ELECTRICAL STATE OF CALIFORNIA

THE STATE OF CALIFORNIA OR ITS OFFICERS OR AGENTS SHALL NOT BE RESPONSIBLE FOR THE ACCURACY OR COMPLETENESS OF ELECTRONIC COPIES OF THIS PLAN SHEET.

NOTE:

1. FOR COMPLETE RIGHT OF WAY AND ACCURATE ACCESS DATA, SEE RIGHT OF WAY RECORD MAPS AT DISTRICT OFFICE.

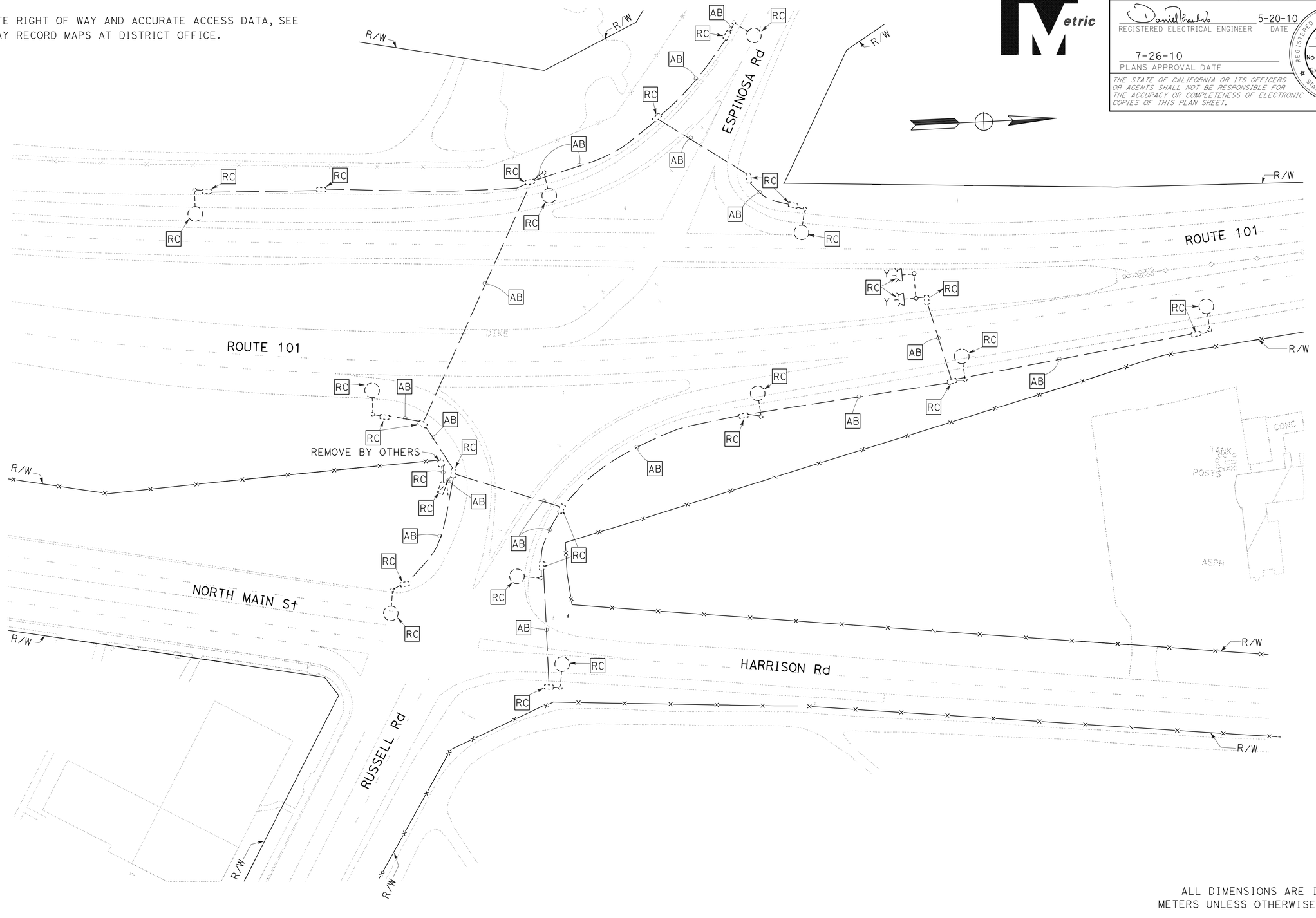

ALL DIMENSIONS ARE IN METERS UNLESS OTHERWISE SHOWN

REMOVE EXISTING ELECTRICAL SYSTEM

SCALE 1:500

E-16

THIS PLAN IS ACCURATE FOR ELECTRICAL WORK ONLY

STATE OF CALIFORNIA - DEPARTMENT OF TRANSPORTATION

Caltrans 06-ELECTRICAL DESIGN

FUNCTIONAL SUPERVISOR: ALI BAKHDOUD

CALCULATED-DESIGNED BY: KARIM ABDOLLAHIAN

CHECKED BY: DANIEL T. VO

REVISED BY — DATE REVISED

LAST REVISION 05-18-10 | DATE PLOTTED => 03-AUG-2010 | TIME PLOTTED => 09:53

BORDER LAST REVISED 3/1/2007

RELATIVE BORDER SCALE IS IN MILLIMETERS 0 20 40 60 80

USERNAME => trrichf
DGN FILE => 50161eua016.dgn

CU 06391 | EA 0161E1

Dist	COUNTY	ROUTE	KILOMETER POST TOTAL PROJECT	SHEET No.	TOTAL SHEETS
05	Mon	101	R146.8/159.7	1080	1402

REGISTERED ELECTRICAL ENGINEER — DATE 5-20-10

7-26-10
PLANS APPROVAL DATE

REGISTERED PROFESSIONAL ENGINEER — DANIEL THANH VO — No. 17408 — Exp. 9/30/10 — ELECTRICAL — STATE OF CALIFORNIA

THE STATE OF CALIFORNIA OR ITS OFFICERS OR AGENTS SHALL NOT BE RESPONSIBLE FOR THE ACCURACY OR COMPLETENESS OF ELECTRONIC COPIES OF THIS PLAN SHEET.

Caltrans Metric

NOTES:(FOR SHEETS E-17 AND E-18)

1. 120/240 V, 1Ø, 3-WIRE, TYPE III-BF SERVICE EQUIPMENT ENCLOSURE WITH THE FOLLOWING CIRCUIT BREAKERS:

CITY SERVICE

AMPERES	VOLTS	POLES	NAME PLATE	METER	PHOTOELECTRIC CONTROL TYPE
100	240	2	MAIN BREAKER	YES	——
60	120	1	TRAFFIC SIGNAL	YES	——
20	240	2	LIGHTING	YES	IV
20	120	1	FLASHING BEACON	YES	——
40	240	2	SPARE	YES	——
——	——	6	SPACE	——	——

2. STATE-FURNISHED MODEL 2070 CONTROLLER ASSEMBLY WITH BATTERY BACKUP SYSTEM.
3. PULL BOX PER PG&E REQUIREMENTS.
4. No. 5 (T) PULL BOX AS NECESSARY TO MAINTAIN 60 m MAXIMUM SPACING.
5. No. 5 PULL BOX AS NECESSARY TO MAINTAIN 60 m MAXIMUM SPACING.
6. 85 m TO LIMIT LINE.
7. 140 m TO LIMIT LINE.
8. 70 m TO LIMIT LINE.
9. 120 m TO LIMIT LINE.
10. INSTALL D3 SNS ON SIGNAL POLE. REFER TO SIGN PLANS FOR SIGN DETAILS.
11. INSTALL R73-3 (CA) SIGN ON SMA. REFER TO SIGN PLANS FOR SIGN DETAILS.
12. INSTALL R9-3A AND R9-3B SIGNS ON SIGNAL POLE. REFER TO SIGN PLANS FOR SIGN DETAILS.
13. 1.8 m X 3.6 m TYPE D LOOP DETECTOR. SEE SAWCUT DETAIL ON SHEET E-1.

CONDUIT AND CONDUCTOR SCHEDULE

CONDUCTOR DESIGNATION			CONDUIT RUN NUMBER AND SIZE							
CABLE TYPE	POLE	PHASE	1	2	3	4	5	6	7	8
			2-103	103	103	103	103 MT	103	103	103
VEH-PED 12CSC	A	2,4,4P / 4	2 / 1	2 / 1						
	B	6,6P / 4	1 / 1	1 / 1	1 / 1					
	C	4,4P / 6	1 / 1	1 / 1	1 / 1	1 / 1				
	D	/ 6	1					1	1	1
	E	5,6,6P	1					1	1	
PPB 3CSC	F	2,4,5	2					2		
	TOTAL		7/4	4/3	2/2	1/1	0/0	3/1	1/1	0/1
AWG	CIRCUIT									
#8	LIGHTING			2	2			2	2	2
#8	FB			2	2	2		2	2	
DLC	PHASE									
	Ø2		1	1						
	Ø2 ADV		1	1						
	Ø4		2	2	2	2				
	Ø4 ADV		1	1	1	1				
	Ø5		1	1						
	Ø6		2					2	2	
	Ø6 ADV		1					1	1	
	TOTAL		9	6	3	3	0	3	3	0

POLE AND EQUIPMENT SCHEDULE

No.	STANDARD TYPE	STANDARD SMA	STANDARD LMA	VEH SIG MTG MAST ARM	VEH SIG MTG POLE	PED SIG MTG	PPB Ø	PPB ARROW	HPS LUM	NOTE
A	26-3-161	13.7	4.6	MAS	SV-2-T	SP-1-T	4	←	200 W	10 11
B	26-3-161	12.2	4.6	MAS	SV-1-T	SP-1-T	4	←	200 W	10
C	1-A				TV-1-T	SP-1-T	6	→		
D	15 TS		4.6				6	←	200 W	
E	1-A				TV-2-T	SP-1-T				12
F	24-3-161	10.7	4.6	MAS MAS	SV-2-T				200 W	F=4.3 10 11 12

ALL DIMENSIONS ARE IN METERS UNLESS OTHERWISE SHOWN

SIGNAL AND LIGHTING (CITY STREET LOCATION 3)

NO SCALE

E-17

THIS PLAN IS ACCURATE FOR ELECTRICAL WORK ONLY.

REVISED BY | DATE REVISED
KARIM ABDOLLAHIAN | DANIEL T. VO
CALCULATED-DESIGNED BY | CHECKED BY
FUNCTIONAL SUPERVISOR: ALI BAKHDOUD

STATE OF CALIFORNIA - DEPARTMENT OF TRANSPORTATION
Caltrans 06-ELECTRICAL DESIGN

Dist	COUNTY	ROUTE	KILOMETER POST TOTAL PROJECT	SHEET No.	TOTAL SHEETS
05	Mon	101	R146.8/159.7	1081	1402

REGISTERED ELECTRICAL ENGINEER 5-20-10 DATE

7-26-10
PLANS APPROVAL DATE

REGISTERED PROFESSIONAL ENGINEER DANIEL THANH VO No. 17408 Exp. 9/30/10 ELECTRICAL STATE OF CALIFORNIA

THE STATE OF CALIFORNIA OR ITS OFFICERS OR AGENTS SHALL NOT BE RESPONSIBLE FOR THE ACCURACY OR COMPLETENESS OF ELECTRONIC COPIES OF THIS PLAN SHEET.

Caltrans Metric

NOTE:

1. FOR NOTES AND SCHEDULE REFER TO SHEET E-17.
2. FOR COMPLETE RIGHT OF WAY AND ACCURATE ACCESS DATA, SEE RIGHT OF WAY RECORD MAPS AT DISTRICT OFFICE.

PHASE DIAGRAM
STEADY DEMAND SEQUENCE

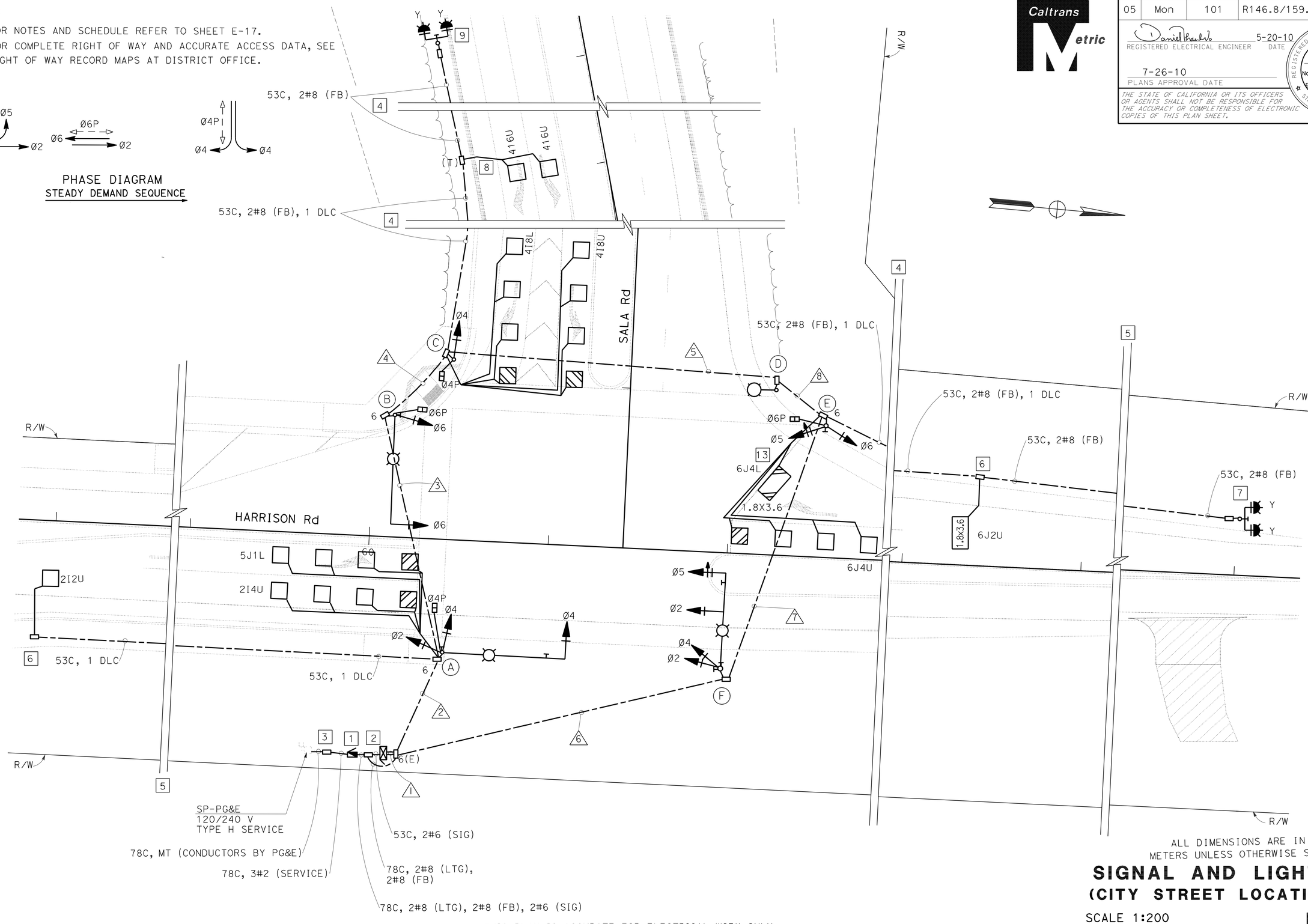

ALL DIMENSIONS ARE IN METERS UNLESS OTHERWISE SHOWN

THIS PLAN IS ACCURATE FOR ELECTRICAL WORK ONLY

SIGNAL AND LIGHTING
(CITY STREET LOCATION 3)

SCALE 1:200

E-18

STATE OF CALIFORNIA - DEPARTMENT OF TRANSPORTATION
Caltrans 06-ELECTRICAL DESIGN

FUNCTIONAL SUPERVISOR: ALI BAKHDOUD
CALCULATED-DESIGNED BY: KARIM ABDOLLAHIAN
CHECKED BY: DANIEL T. VO
REVISED BY / DATE REVISED

LAST REVISION DATE PLOTTED => 03-AUG-2010
05-18-10 TIME PLOTTED => 09:53

Dist	COUNTY	ROUTE	KILOMETER POST TOTAL PROJECT	SHEET No.	TOTAL SHEETS
05	Mon	101	R146.8/159.7	1082	1402

Caltrans Metric

REGISTERED ELECTRICAL ENGINEER — DATE 5-20-10

7-26-10
PLANS APPROVAL DATE

REGISTERED PROFESSIONAL ENGINEER — DANIEL THANH VO — No. 17408 — Exp. 9/30/10 — ELECTRICAL — STATE OF CALIFORNIA

THE STATE OF CALIFORNIA OR ITS OFFICERS OR AGENTS SHALL NOT BE RESPONSIBLE FOR THE ACCURACY OR COMPLETENESS OF ELECTRONIC COPIES OF THIS PLAN SHEET.

NOTES:(FOR SHEETS E-19 AND E-20)

1. 120/240 V, 1Ø, 3-WIRE, TYPE III-BF SERVICE EQUIPMENT ENCLOSURE WITH THE FOLLOWING CIRCUIT BREAKERS:

CITY SERVICE

AMPERES	VOLTS	POLES	NAME PLATE	METER	PHOTOELECTRIC CONTROL TYPE
100	240	2	MAIN BREAKER	YES	——
60	120	1	TRAFFIC SIGNAL	YES	——
20	240	2	LIGHTING	YES	IV
20	120	1	FLASHING BEACON	YES	——
40	240	2	SPARE	YES	——
——	——	6	SPACE	——	——

2. STATE-FURNISHED MODEL 2070 CONTROLLER ASSEMBLY WITH BATTERY BACKUP SYSTEM.
3. PULL BOX PER PG&E REQUIREMENTS.
4. No. 5 PULL BOX AS NECESSARY TO MAINTAIN 60 m MAXIMUM SPACING.
5. 70 m TO LIMIT LINE.
6. 165 m TO LIMIT LINE.
7. 125 m TO LIMIT LINE.
8. INSTALL D3-1 SNS ON SIGNAL POLE. REFER TO SIGN PLANS FOR SIGN DETAILS.
9. INSTALL R73-3 (CA) SNS ON SMA. REFER TO SIGN PLANS FOR SIGN DETAILS.
10. 1.8 m X 3.6 m TYPE D LOOP DETECTOR. SEE SAWCUT DETAIL ON SHEET E-1.

POLE AND EQUIPMENT SCHEDULE

	STANDARD			VEH SIG MTG		PED SIG MTG	PPB		HPS LUM	NOTE
No.	TYPE	SMA	LMA	MAST ARM	POLE		Ø	ARROW		
A	1-A				TV-2-T	SP-1-T	2	→		
B	24-4-161	10.7	3.7	MAS MAS	SV-1-T	SP-1-T	2	←	200 W	F=4.3 [8] [9]
C	1-A				TV-2-T	SP-1-T	4	→		
D	29-5-161	15.2	4.6	MAS MAS	SV-1-T	SP-1-T	4	←	200 W	F=4.6 [8] [9]
E	1-A				TV-2-T	SP-1-T	6	→		
F	29-5-161	16.8	4.6	MAS MAS	SV-1-T	SP-1-T	6	←	200 W	F=4.6 [8] [9]
G	1-A				TV-2-T	SP-1-T	8	→		
H	24-4-161	10.7	3.7	MAS MAS	SV-1-T	SP-1-T			200 W	F=4.3 [8] [9]
I	PPB POST						8	←		

CONDUIT AND CONDUCTOR SCHEDULE

CONDUCTOR DESIGNATION			CONDUIT RUN NUMBER AND SIZE									
CABLE TYPE	POLE	PHASE	1	2	3	4	5	6	7	8	9	10
			2-103	103	103	103	103	103	103	103	103	103
VEH-PED 12CSC	A	7,8,8P / 2	1/1	1/1	1/1							
	B	4,7,4P / 2	1/1	1/1	1/1	1/1						
	C	1,2,2P / 4	1/1	1/1	1/1	1/1	1/1					
	D	1,6,6P / 4	1/1	1/1	1/1	1/1	1/1	1/1				
	E	3,4,4P / 6	1/1						1/1	1/1	1/1	1/1
	F	3,8,8P / 6	1/1						1/1	1/1	1/1	
	G	5,6,6P / 8	1/1						1/1	1/1		
PPB 3CSC	H	2,5,2P / 1							1			
	I	8	1	1	1							
	TOTAL		8/8	4/5	4/5	3/3	2/2	1/1	4/3	3/3	2/2	1/1
AWG	CIRCUIT											
#8	LIGHTING			2	2	2	2	2	2	2	2	
#8	FB			2					2	2	2	2
DLC		PHASE										
		Ø1	1						1	1		
		Ø2	1	1	1	1	1					
		Ø2 ADV	1	1	1	1	1					
		Ø3	1	1	1							
		Ø4	1						1	1	1	1
		Ø4 ADV	1						1	1	1	1
		Ø5	1	1	1	1	1					
		Ø6	2						2	2		
		Ø6 ADV	1						1	1		
		Ø7	1						1	1	1	1
		Ø8	1	1	1							
		Ø8 ADV	1	1	1							
		TOTAL	13	6	6	3	3	0	7	7	3	3

ALL DIMENSIONS ARE IN METERS UNLESS OTHERWISE SHOWN

SIGNAL AND LIGHTING
(CITY STREET LOCATION 4)

NO SCALE

E-19

THIS PLAN IS ACCURATE FOR ELECTRICAL WORK ONLY

REVISED BY | DATE REVISED
KARIM ABDOLLAHIAN | DANIEL T. VO
CALCULATED-DESIGNED BY | CHECKED BY
FUNCTIONAL SUPERVISOR: ALI BAKHDOUD

STATE OF CALIFORNIA - DEPARTMENT OF TRANSPORTATION
Caltrans 06-ELECTRICAL DESIGN

LAST REVISION 05-18-10 | DATE PLOTTED => 03-AUG-2010 | TIME PLOTTED => 09:54

Dist	COUNTY	ROUTE	KILOMETER POST TOTAL PROJECT	SHEET No.	TOTAL SHEETS
05	Mon	101	R146.8/159.7	1083	1402

REGISTERED ELECTRICAL ENGINEER — DATE: 5-20-10

PLANS APPROVAL DATE: 7-26-10

REGISTERED PROFESSIONAL ENGINEER — DANIEL THANH VO — No. 17408 — Exp. 9/30/10 — ELECTRICAL — STATE OF CALIFORNIA

THE STATE OF CALIFORNIA OR ITS OFFICERS OR AGENTS SHALL NOT BE RESPONSIBLE FOR THE ACCURACY OR COMPLETENESS OF ELECTRONIC COPIES OF THIS PLAN SHEET.

Caltrans Metric

NOTES:

1. FOR NOTES AND SCHEDULE REFER TO SHEET E-19.
2. FOR COMPLETE RIGHT OF WAY AND ACCURATE ACCESS DATA, SEE RIGHT OF WAY RECORD MAPS AT DISTRICT OFFICE.

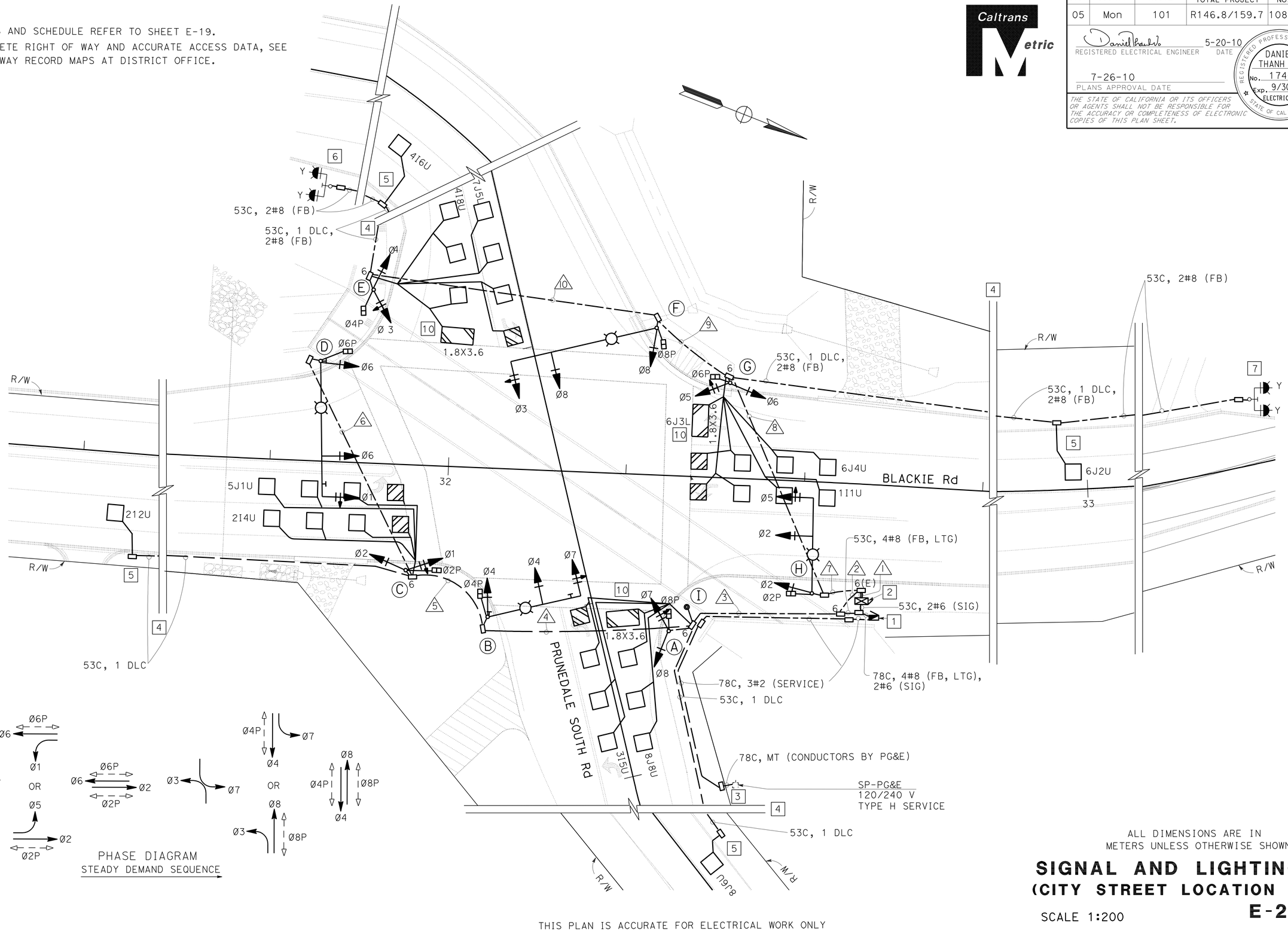

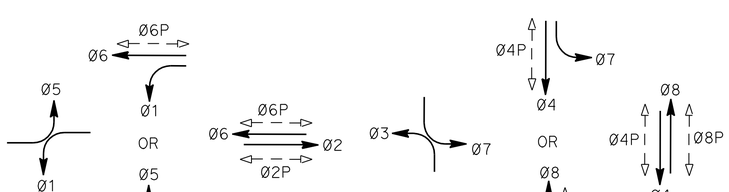

PHASE DIAGRAM
STEADY DEMAND SEQUENCE

THIS PLAN IS ACCURATE FOR ELECTRICAL WORK ONLY

ALL DIMENSIONS ARE IN METERS UNLESS OTHERWISE SHOWN

SIGNAL AND LIGHTING
(CITY STREET LOCATION 4)

SCALE 1:200

E-20

STATE OF CALIFORNIA - DEPARTMENT OF TRANSPORTATION
Caltrans 06-ELECTRICAL DESIGN

FUNCTIONAL SUPERVISOR: ALI BAKHDOUD
CALCULATED-DESIGNED BY: KARIM ABDOLLAHIAN
CHECKED BY: DANIEL T. VO
REVISED BY / DATE REVISED

LAST REVISION 05-18-10 | DATE PLOTTED => 03-AUG-2010 | TIME PLOTTED => 09:54

Dist	COUNTY	ROUTE	KILOMETER POST TOTAL PROJECT	SHEET No.	TOTAL SHEETS
05	Mon	101	R146.8/159.7	1084	1402

Caltrans Metric

REGISTERED ELECTRICAL ENGINEER 5-20-10 DATE

7-26-10
PLANS APPROVAL DATE

REGISTERED PROFESSIONAL ENGINEER DANIEL THANH VO No. 17408 Exp. 9/30/10 ELECTRICAL STATE OF CALIFORNIA

THE STATE OF CALIFORNIA OR ITS OFFICERS OR AGENTS SHALL NOT BE RESPONSIBLE FOR THE ACCURACY OR COMPLETENESS OF ELECTRONIC COPIES OF THIS PLAN SHEET.

NOTES : (FOR SHEETS E-21 AND E-22 AND SHEET 23)

1 120/240 V, 1Ø, 3-WIRE, TYPE III-CF SERVICE EQUIPMENT ENCLOSURE WITH THE FOLLOWING CIRCUIT BREAKERS:

CTID No. 05451010096141T

AMPERES	VOLTS	POLES	NAME PLATE	METER	PHOTOELECTRIC CONTROL TYPE
100	240	2	MAIN BREAKER	YES	——
60	120	1	TRAFFIC SIGNAL	YES	——
30	120	1	CCTV	YES	——
20	120	1	TDC	YES	——
20	120	1	FB	YES	——
——	——	6	SPACE	——	——

CTID No. 05451010096141L

AMPERES	VOLTS	POLES	NAME PLATE	METER	PHOTOELECTRIC CONTROL TYPE
100	240	2	MAIN BREAKER	YES	——
30	240	2	LIGHTING (SIGNAL)	YES	IV
30	240	2	HIGHWAY LIGHTING	YES	V
20	120	1	HIGHWAY LIGHTING AND SIGN ILLUMINATION CONTROL	YES	——
30	240	2	SIGN ILLUMINATION	YES	LC3 SIGN CONTROL
——	——	6	SPACE	——	——

2 STATE-FURNISHED MODEL 2070 CONTROLLER ASSEMBLY WITH BATTERY BACKUP SYSTEM.

3 MODEL 334 VIDEO CABINET AS SHOWN ON SHEET E-29.

4 TYPE B TELEPHONE DEMARCATION CABINET AS SHOWN ON SHEET E-29.

5 85 m TO LIMIT LINE.

6 No. 5 PULL BOX AS NECESSARY TO MAINTAIN 60 m MAXIMUM SPACING.

7 92 m TO LIMIT LINE.

8 115 m TO LIMIT LINE.

9 125 m TO LIMIT LINE.

10 TYPE CCTV 30 POLE WITH CAMERA ASSEMBLY AS SHOWN ON SHEETS E-29 AND SES-1.

11 INSTALL R3-4 ON SMA. REFER TO SIGN PLANS FOR SIGN DETAILS.

12 INSTALL R3-18 ON SMA. REFER TO SIGN PLANS FOR SIGN DETAILS.

13 INSTALL D3 SNS ON SIGNAL POLE. REFER TO SIGN PLANS FOR SIGN DETAILS.

CONDUIT AND CONDUCTOR SCHEDULE

CONDUCTOR DESIGNATION			CONDUIT RUN NUMBER AND SIZE				
CABLE TYPE	POLE	PHASE	1	2	3	4	5
			2-103	78	103	103	78
VEH-PED 12CSC / PPB 3CSC	A	6	1				
	B	4	1	1			
	C	6	1	1	1		
	D	2	1	1	1	1	
	E	2,4	2	2	2	2	2
	TOTAL		6/0	5/0	4/0	3/0	2/0

AWG	CIRCUIT					
#8	LIGHTING		2	2	2	2
#8	Hwy LIGHTING		2			
#8	SIGN ILLUMINATION		2			
#8	FB		2	2		
	SIC	1				
DETECTORS-TYPE B DLC						
DLC	PHASE					
	Ø2	2	2	2		
	Ø2 MID	2	2	2		
	Ø2 ADV	2	2	2		
	Ø6	1	1	1	1	1
	Ø6 ADV	1				
	Ø8	2	2			
	Ø8 ADV	2	2			
	TOTAL	12	11	7	1	1

POLE AND EQUIPMENT SCHEDULE

No.	STANDARD TYPE	STANDARD SMA	STANDARD LMA	VEH SIG MTG MAST ARM	VEH SIG MTG POLE	HPS LUM	NOTE
A	24-3-161	7.6	3.7	MAS	SV-1-T	200 W	11
B	1-A				TV-1-T		
C	1-A				TV-1-T		
D	24-3-161	6.1	3.7	MAS	SV-1-T	200 W	12
E	24-3-161	6.1	3.7	MAS	SV-2-T	200 W	13

ALL DIMENSIONS ARE IN METERS UNLESS OTHERWISE SHOWN

SIGNAL AND LIGHTING
LIGHTING AND SIGN ILLUMINATION
CLOSED CIRCUIT TELEVISION SYSTEM

NO SCALE

E-21

THIS PLAN IS ACCURATE FOR ELECTRICAL WORK ONLY

STATE OF CALIFORNIA - DEPARTMENT OF TRANSPORTATION
Caltrans 06-ELECTRICAL DESIGN

FUNCTIONAL SUPERVISOR: ALI BAKHDOUD
CALCULATED-DESIGNED BY: DANIEL T. VO
CHECKED BY: KARIM ABDOLLAHIAN
REVISED BY / DATE REVISED

LAST REVISION 05-18-10 | DATE PLOTTED => 03-AUG-2010 | TIME PLOTTED => 09:54

Dist	COUNTY	ROUTE	KILOMETER POST TOTAL PROJECT	SHEET No.	TOTAL SHEETS
05	Mon	101	R146.8/159.7	1085	1402

Caltrans Metric

REGISTERED ELECTRICAL ENGINEER — DATE 5-20-10

7-26-10
PLANS APPROVAL DATE

REGISTERED PROFESSIONAL ENGINEER DANIEL THANH VO No. 17408 Exp. 9/30/10 ELECTRICAL STATE OF CALIFORNIA

THE STATE OF CALIFORNIA OR ITS OFFICERS OR AGENTS SHALL NOT BE RESPONSIBLE FOR THE ACCURACY OR COMPLETENESS OF ELECTRONIC COPIES OF THIS PLAN SHEET.

NOTES:

1. FOR NOTES AND SCHEDULE REFER TO SHEET E-21.
2. FOR COMPLETE RIGHT OF WAY AND ACCURATE ACCESS DATA, SEE RIGHT OF WAY RECORD MAPS AT DISTRICT OFFICE.

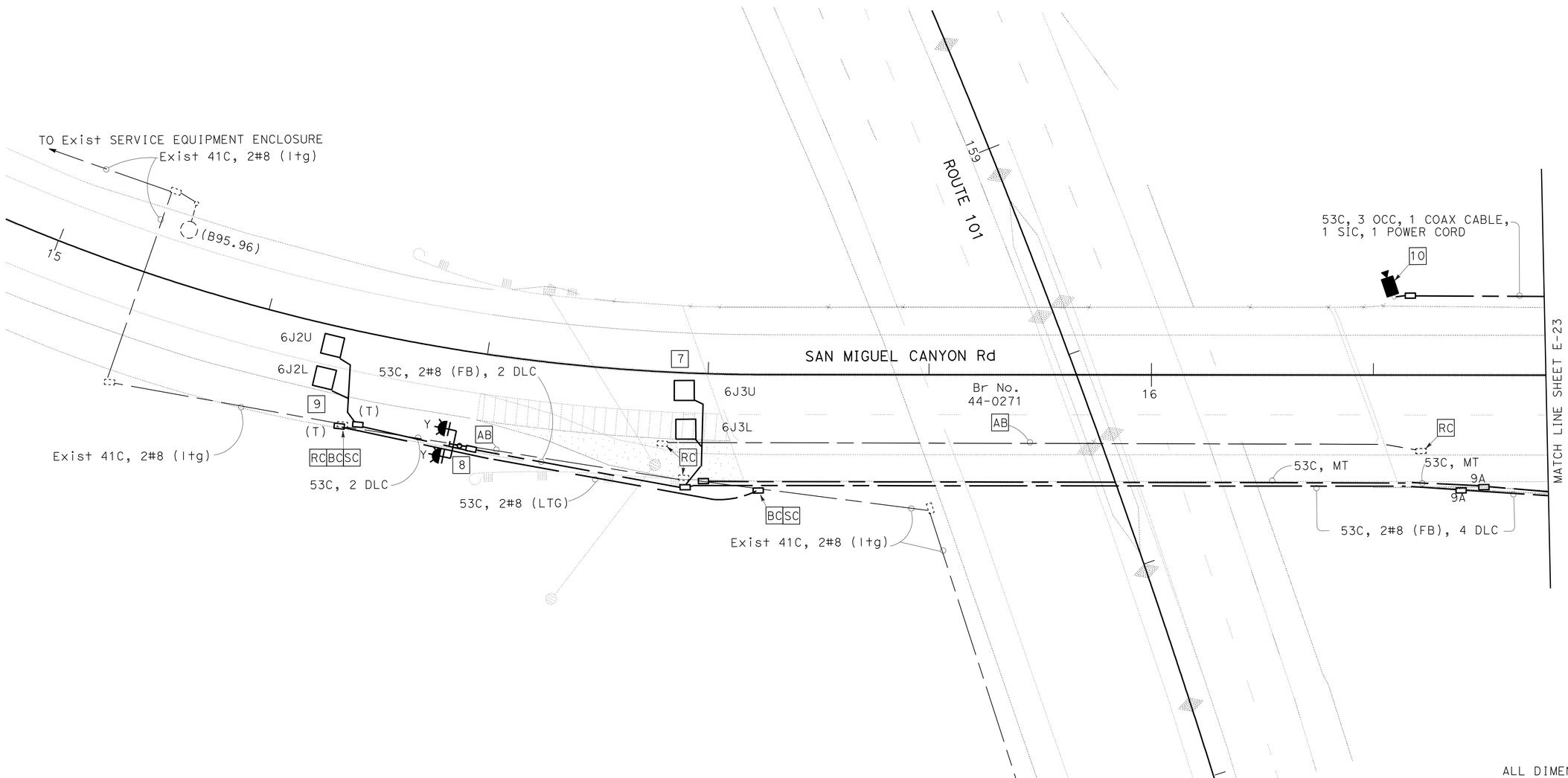

ALL DIMENSIONS ARE IN METERS UNLESS OTHERWISE SHOWN

THIS PLAN IS ACCURATE FOR ELECTRICAL WORK ONLY.

SCALE 1:200

SIGNAL AND LIGHTING
LIGHTING AND SIGN ILLUMINATION
CLOSED CIRCUIT TELEVISION SYSTEM

E-22

STATE OF CALIFORNIA - DEPARTMENT OF TRANSPORTATION
Caltrans 06-ELECTRICAL DESIGN

FUNCTIONAL SUPERVISOR: ALI BAKHDOUD
CALCULATED-DESIGNED BY: KARIM ABDOLLAHIAN
CHECKED BY: DANIEL T. VO
REVISED BY
DATE REVISED

LAST REVISION 05-18-10
DATE PLOTTED => 03-AUG-2010
TIME PLOTTED => 0954

Dist	COUNTY	ROUTE	KILOMETER POST TOTAL PROJECT	SHEET No.	TOTAL SHEETS
05	Mon	101	R146.8/159.7	1086	1402

REGISTERED ELECTRICAL ENGINEER — DATE 5-20-10

7-26-10
PLANS APPROVAL DATE

REGISTERED PROFESSIONAL ENGINEER — DANIEL THANH VO — No. 17408 — Exp. 9/30/10 — ELECTRICAL — STATE OF CALIFORNIA

THE STATE OF CALIFORNIA OR ITS OFFICERS OR AGENTS SHALL NOT BE RESPONSIBLE FOR THE ACCURACY OR COMPLETENESS OF ELECTRONIC COPIES OF THIS PLAN SHEET.

Caltrans Metric

NOTES:

1. SEE SHEET E-21 FOR NOTES AND SCHEDULES.
2. FOR COMPLETE RIGHT OF WAY AND ACCURATE ACCESS DATA, SEE RIGHT OF WAY RECORD MAPS AT DISTRICT OFFICE.

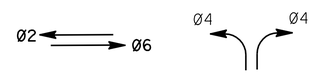

PHASE DIAGRAM
STEADY DEMAND SEQUENCE

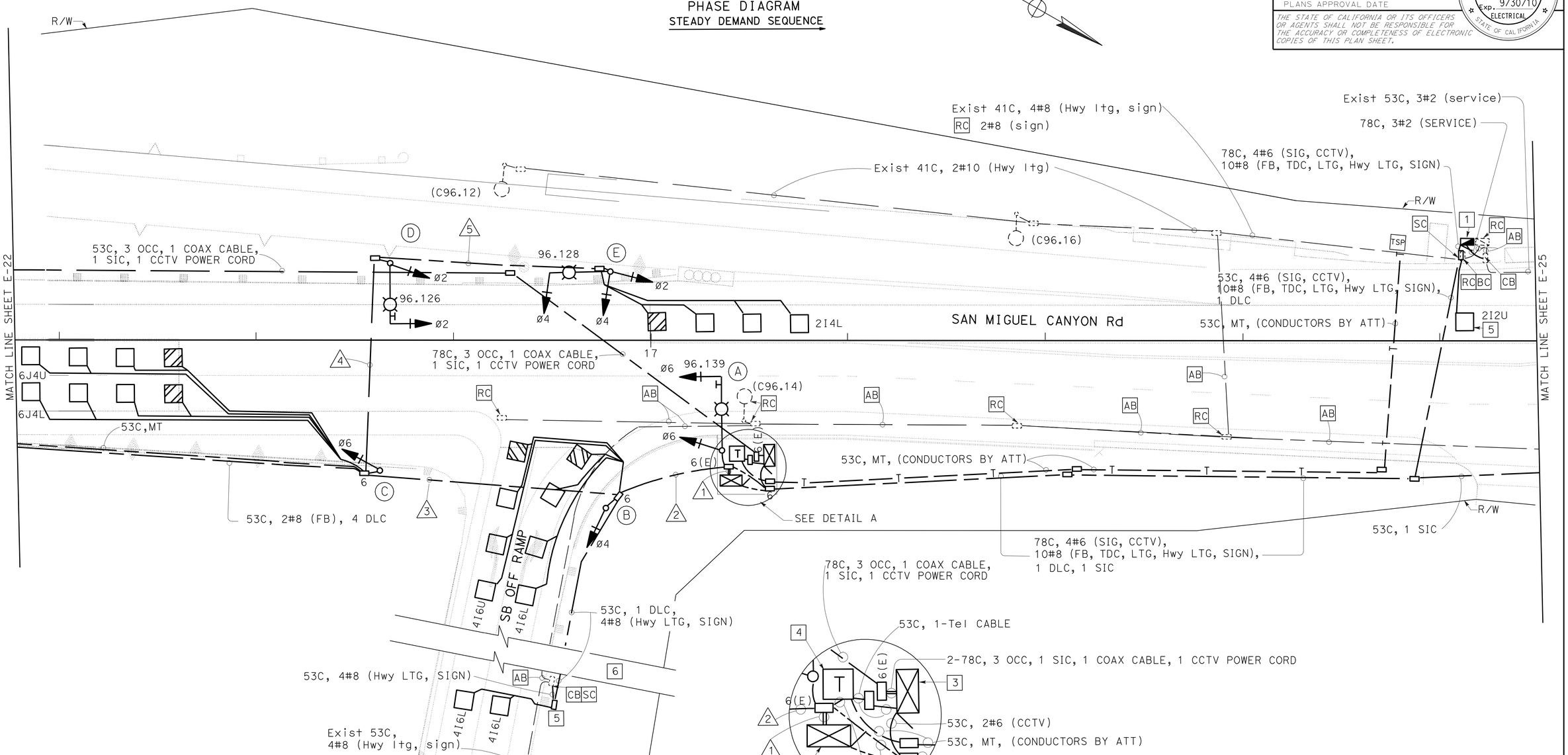

DETAIL A
NO SCALE

ALL DIMENSIONS ARE IN METERS UNLESS OTHERWISE SHOWN

SIGNAL AND LIGHTING
LIGHTING AND SIGN ILLUMINATION
CLOSED CIRCUIT TELEVISION SYSTEM

SCALE 1:200

E-23

THIS PLAN IS ACCURATE FOR ELECTRICAL WORK ONLY.

STATE OF CALIFORNIA - DEPARTMENT OF TRANSPORTATION
Caltrans 06-ELECTRICAL DESIGN

FUNCTIONAL SUPERVISOR: ALI BAKHDOUD
CALCULATED-DESIGNED BY: KARIM ABDOLLAHIAN
CHECKED BY: DANIEL T. VO
REVISED BY / DATE REVISED

LAST REVISION 05-18-10 | DATE PLOTTED => 03-AUG-2010 | TIME PLOTTED => 09:55

Dist	COUNTY	ROUTE	KILOMETER POST TOTAL PROJECT	SHEET No.	TOTAL SHEETS
05	Mon	101	R146.8/159.7	1087	1402

REGISTERED ELECTRICAL ENGINEER — DATE 5-20-10

7-26-10
PLANS APPROVAL DATE

REGISTERED PROFESSIONAL ENGINEER — DANIEL THANH VO — No. 17408 — Exp. 9/30/10 — ELECTRICAL — STATE OF CALIFORNIA

THE STATE OF CALIFORNIA OR ITS OFFICERS OR AGENTS SHALL NOT BE RESPONSIBLE FOR THE ACCURACY OR COMPLETENESS OF ELECTRONIC COPIES OF THIS PLAN SHEET.

NOTES: (FOR SHEETS E-24 AND E-25)

1. 120/208 V, 1Ø, 3-WIRE, TYPE III-BF SERVICE EQUIPMENT ENCLOSURE WITH THE FOLLOWING CIRCUIT BREAKERS:

CITY SERVICE

AMPERES	VOLTS	POLES	NAME PLATE	METER	PHOTOELECTRIC CONTROL TYPE
100	240	2	MAIN BREAKER	YES	——
60	120	1	TRAFFIC SIGNAL	YES	——
30	120	1	LIGHTING	NO	V
15	120	1	LIGHTING CONTROL	NO	——
40	120	1	SPARE	YES	——
——	——	6	SPACE	——	——

2. STATE-FURNISHED MODEL 2070 CONTROLLER ASSEMBLY WITH BATTERY BACKUP SYSTEM.
3. 55 m TO LIMIT LINE.
4. INSTALL D3 SNS ON SIGNAL POLE. REFER TO SIGN PLANS FOR SIGN DETAILS.
5. INSTALL R73-3 (CA) ON SMA. POLE. REFER TO SIGN PLANS FOR SIGN DETAILS.
6. INSTALL R73-4 (CA) ON SMA. POLE. REFER TO SIGN PLANS FOR SIGN DETAILS.

POLE AND EQUIPMENT SCHEDULE

	STANDARD			VEH SIG MTG		PED SIG MTG	PPB		HPS LUM	NOTE
No.	TYPE	SMA	LMA	MAST ARM	POLE		Ø	ARROW		
A	1-A				TV-2-T	SP-1-T	2	→		
B	19-4-161	9.1	3.7	MAS MAS	SV-1-T	SP-1-T	2	←	200 W	F= 4.2 [4] [6]
C	1-A				TV-2-T	SP-1-T	4	→		
D	26-4-161	12.2	3.7	MAS MAS	SV-1-T	SP-1-T	4	←	200 W	F= 5.2 [4] [5]
E	1-A				TV-2-T	SP-1-T	6	→		
F	19-4-161	7.6	3.7	MAS MAS	SV-1-T	SP-1-T	6	←	200 W	F= 4.1 [4] [6]
G	1-A				TV-2-T	SP-1-T	8	→		
H	26-4-161	13.7	3.7	MAS MAS	SV-1-T	SP-1-T	8	←	200 W	F= 5.5 [4] [5]

CONDUIT AND CONDUCTOR SCHEDULE

CONDUCTOR DESIGNATION			CONDUIT RUN NUMBER AND SIZE									
CABLE TYPE	POLE	PHASE	1	2	3	4	5	6	7	8	9	10
			2-103	103	103	103	103	103 MT	103	103	103	103
VEH-PED 12CSC	A	7,8,8P / 2	1/1	1/1								
	B	4,7,4P / 2	1/1	1/1	1/1							
	C	1,2,2P / 4	1/1	1/1	1/1	1/1						
	D	1,6,6P / 4	1/1	1/1	1/1	1/1	1/1					
	E	3,4,4P / 6	1/1						1/1	1/1	1/1	1/1
	F	3,8,8P / 6	1/1							1/1	1/1	1/1
PPB 3CSC	G	5,6,6P / 8	1/1								1/1	1/1
	H	2,5,2P / 8	1/1									1/1
	TOTAL		8/8	4/4	3/3	2/2	1/1	0/0	1/1	2/2	3/3	4/4
AWG	CIRCUIT											
#8	LIGHTING			2	2	2	2			2	2	2
	SIC		2					1	1	1	2	2
DLC		PHASE										
		Ø1	1								1	1
		Ø2	3	3	3	3						
		Ø2 ADV	1	1	1	1						
		Ø3	1	1								
		Ø4	1						1	1	1	1
		Ø5	1	1	1	1						
		Ø6	2								2	2
		Ø6 ADV	2								2	2
		Ø7	1						1	1	1	1
		Ø8	1	1								
		Ø8 ADV	1	1								
		TOTAL	15	8	5	5	0	0	2	2	7	7

ALL DIMENSIONS ARE IN METERS UNLESS OTHERWISE SHOWN

MODIFY SIGNAL AND LIGHTING
(CITY STREET LOCATION 1)

NO SCALE

E-24

THIS PLAN IS ACCURATE FOR ELECTRICAL WORK ONLY

REVISED BY | DATE REVISED
KARIM ABDOLLAHIAN | DANIEL T. VO
CALCULATED-DESIGNED BY | CHECKED BY
FUNCTIONAL SUPERVISOR: ALI BAKHDOUD

STATE OF CALIFORNIA - DEPARTMENT OF TRANSPORTATION
Caltrans 06-ELECTRICAL DESIGN

LAST REVISION 05-18-10 | DATE PLOTTED => 03-AUG-2010 | TIME PLOTTED => 09:55

Dist	COUNTY	ROUTE	KILOMETER POST TOTAL PROJECT	SHEET No.	TOTAL SHEETS
05	Mon	101	R146.8/159.7	1088	1402

Caltrans Metric

REGISTERED ELECTRICAL ENGINEER — DATE 5-20-10

7-26-10
PLANS APPROVAL DATE

REGISTERED PROFESSIONAL ENGINEER DANIEL THANH VO No. 17408 Exp. 9/30/10 ELECTRICAL STATE OF CALIFORNIA

THE STATE OF CALIFORNIA OR ITS OFFICERS OR AGENTS SHALL NOT BE RESPONSIBLE FOR THE ACCURACY OR COMPLETENESS OF ELECTRONIC COPIES OF THIS PLAN SHEET.

NOTES:

1. SEE SHEET E-24 FOR NOTES AND SCHEDULES.
2. FOR COMPLETE RIGHT OF WAY AND ACCURATE ACCESS DATA, SEE RIGHT OF WAY RECORD MAPS AT DISTRICT OFFICE.

PHASE DIAGRAM
STEADY DEMAND SEQUENCE

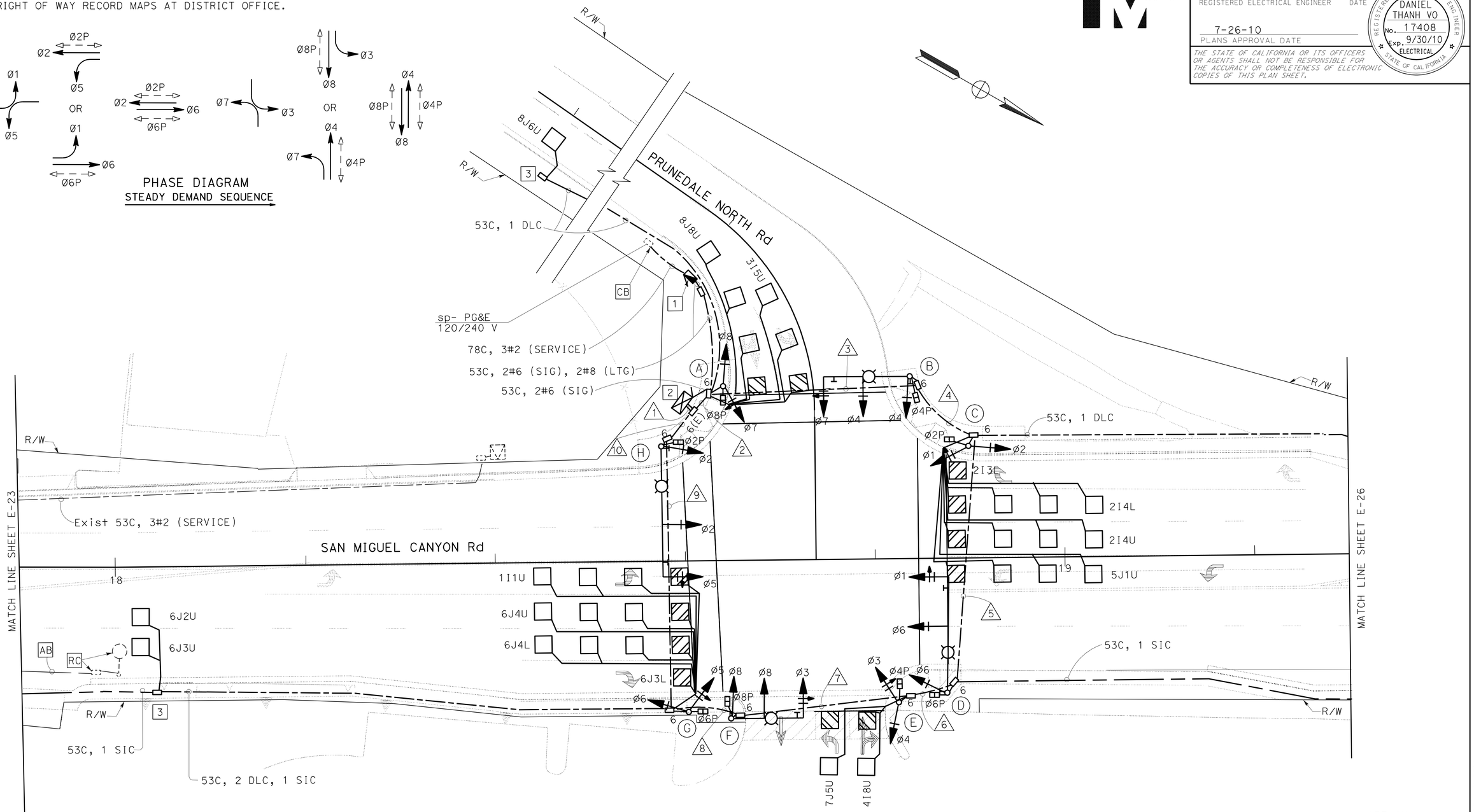

ALL DIMENSIONS ARE IN METERS UNLESS OTHERWISE SHOWN

MODIFY SIGNAL AND LIGHTING
(CITY STREET LOCATION 1)

SCALE 1:200

E-25

THIS PLAN IS ACCURATE FOR ELECTRICAL WORK ONLY.

STATE OF CALIFORNIA - DEPARTMENT OF TRANSPORTATION
Caltrans 06-ELECTRICAL DESIGN

FUNCTIONAL SUPERVISOR: ALI BAKHDOUD
CALCULATED-DESIGNED BY: KARIM ABDOLLAHIAN
CHECKED BY: DANIEL T. VO
REVISED BY / DATE REVISED

LAST REVISION 05-18-10 | DATE PLOTTED => 03-AUG-2010 | TIME PLOTTED => 10:44

Dist	COUNTY	ROUTE	KILOMETER POST TOTAL PROJECT	SHEET No.	TOTAL SHEETS
05	Mon	101	R146.8/159.7	1089	1402

REGISTERED ELECTRICAL ENGINEER — DATE 5-20-10

7-26-10
PLANS APPROVAL DATE

REGISTERED PROFESSIONAL ENGINEER — DANIEL THANH VO — No. 17408 — Exp. 9/30/10 — ELECTRICAL — STATE OF CALIFORNIA

THE STATE OF CALIFORNIA OR ITS OFFICERS OR AGENTS SHALL NOT BE RESPONSIBLE FOR THE ACCURACY OR COMPLETENESS OF ELECTRONIC COPIES OF THIS PLAN SHEET.

Caltrans Metric

NOTE:

1. FOR COMPLETE RIGHT OF WAY AND ACCURATE ACCESS DATA, SEE RIGHT OF WAY RECORD MAPS AT DISTRICT OFFICE.

CONDUIT NOTES:

1. Exist 2-103C, 34#14, 6#10, 4#12, 2#8, 11 dlc, 2 dlc, ADD 2 DLC, 1 SIC
2. Exist 78C, 22#14, 2#10, 2#12, 2#8, 9 dlc, 2 dlc, ADD 2 DLC, 1 SIC
3. Exist 78C, 21#14, 2#10, 2#12, 2#8, 9 dlc, 2 dlc, ADD 2 DLC, 1 SIC
4. Exist 41C, 2 dlc, ADD 2 DLC, 1 SIC
5. 53C, 2 DLC, 1 SIC

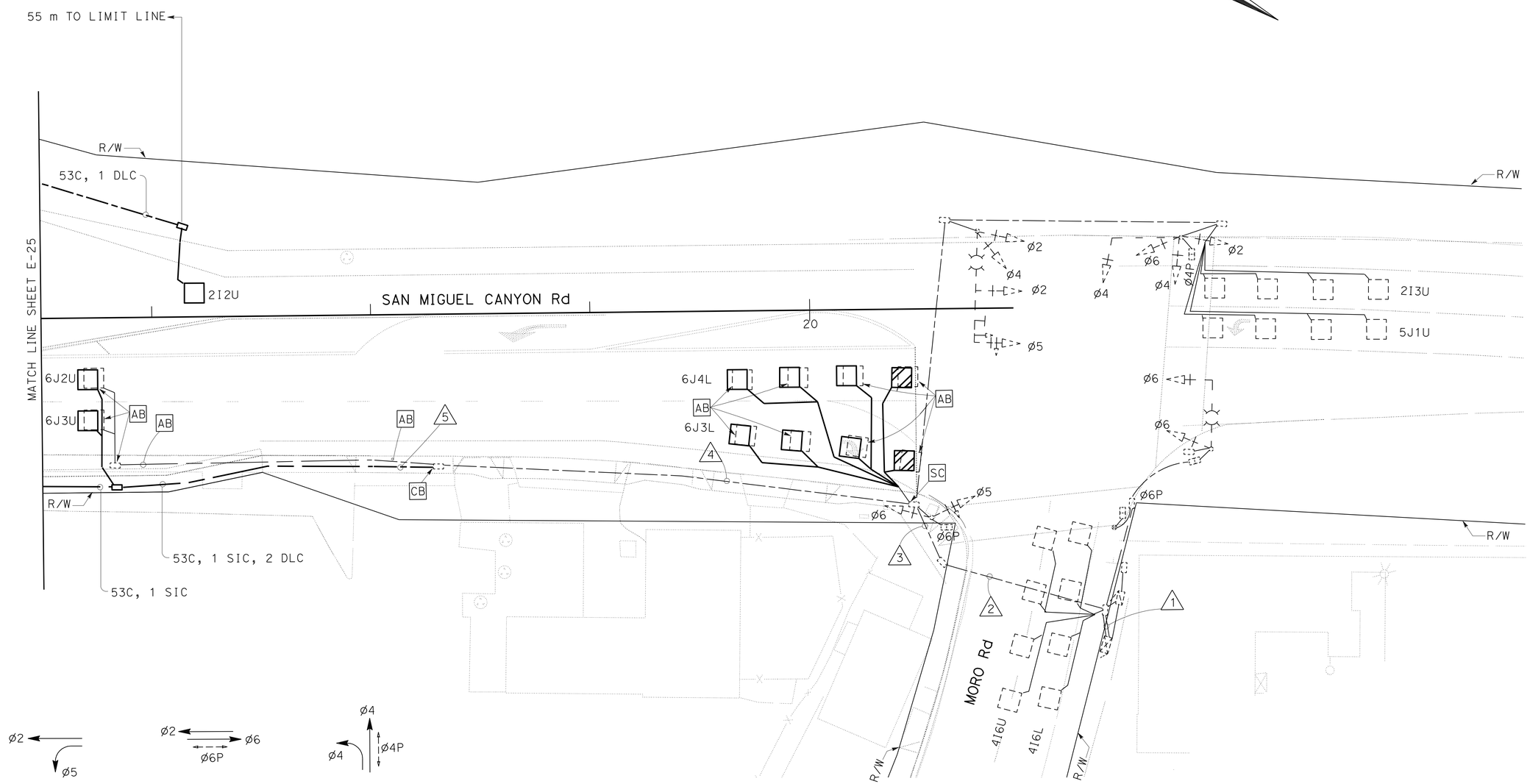

PHASE DIAGRAM
STEADY DEMAND SEQUENCE

ALL DIMENSIONS ARE IN METERS UNLESS OTHERWISE SHOWN

MODIFY SIGNAL AND LIGHTING
(CITY STREET LOCATION 2)

SCALE 1:200

E-26

THIS PLAN IS ACCURATE FOR ELECTRICAL WORK ONLY.

STATE OF CALIFORNIA - DEPARTMENT OF TRANSPORTATION
Caltrans 06-ELECTRICAL DESIGN

FUNCTIONAL SUPERVISOR: ALI BAKHDOUD
CALCULATED-DESIGNED BY: KARIM ABDOLLAHIAN
CHECKED BY: DANIEL T. VO
REVISED BY / DATE REVISED

LAST REVISION 05-18-10 | DATE PLOTTED => 03-AUG-2010 | TIME PLOTTED => 10:45

Dist	COUNTY	ROUTE	KILOMETER POST TOTAL PROJECT	SHEET No.	TOTAL SHEETS
05	Mon	101	R146.8/159.7	1090	1402

REGISTERED ELECTRICAL ENGINEER — DATE: 5-20-10

PLANS APPROVAL DATE: 7-26-10

REGISTERED PROFESSIONAL ENGINEER — DANIEL THANH VO — No. 17408 — Exp. 9/30/10 — ELECTRICAL — STATE OF CALIFORNIA

THE STATE OF CALIFORNIA OR ITS OFFICERS OR AGENTS SHALL NOT BE RESPONSIBLE FOR THE ACCURACY OR COMPLETENESS OF ELECTRONIC COPIES OF THIS PLAN SHEET.

Caltrans Metric

NOTE:

1. FOR COMPLETE RIGHT OF WAY AND ACCURATE ACCESS DATA, SEE RIGHT OF WAY RECORD MAPS AT DISTRICT OFFICE.

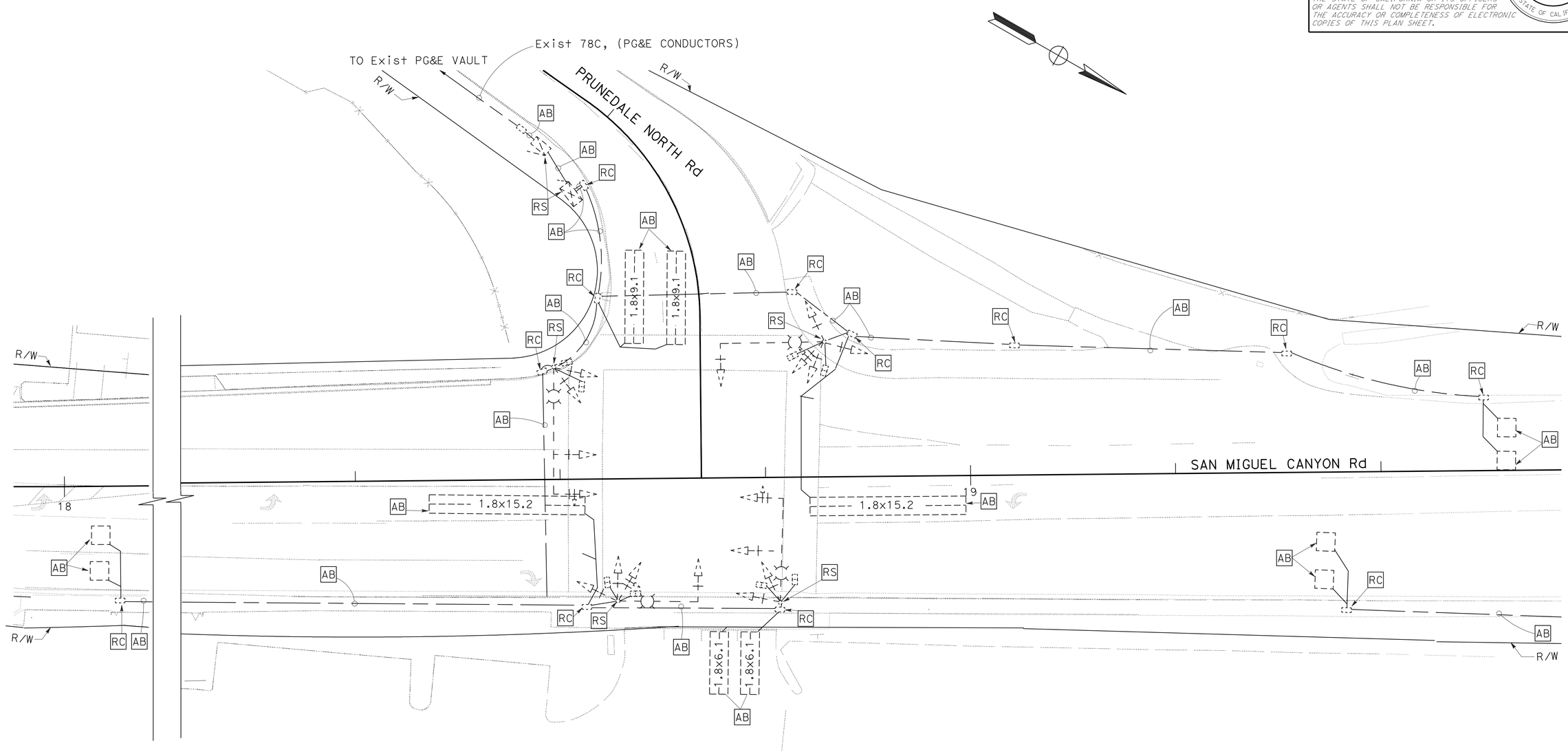

ALL DIMENSIONS ARE IN METERS UNLESS OTHERWISE SHOWN

MODIFY SIGNAL AND LIGHTING
(CITY STREET LOCATION 1)

SCALE 1:200

E-27

THIS PLAN IS ACCURATE FOR ELECTRICAL WORK ONLY.

STATE OF CALIFORNIA - DEPARTMENT OF TRANSPORTATION
Caltrans 06-ELECTRICAL DESIGN

FUNCTIONAL SUPERVISOR: ALI BAKHDOUD
CALCULATED-DESIGNED BY: KARIM ABDOLLAHIAN
CHECKED BY: DANIEL T. VO
REVISED BY / DATE REVISED

LAST REVISION 05-18-10
DATE PLOTTED => 03-AUG-2010
TIME PLOTTED => 10:45

BORDER LAST REVISED 3/1/2007
RELATIVE BORDER SCALE IS IN MILLIMETERS 0 20 40 60 80
USERNAME => trmariak
DGN FILE => 50161eua027.dgn
CU 06391
EA 0161E1

Dist	COUNTY	ROUTE	KILOMETER POST TOTAL PROJECT	SHEET No.	TOTAL SHEETS
05	Mon	101	R146.8/159.7	1091	1402

Daniel Thanh Vo 5-20-10
REGISTERED ELECTRICAL ENGINEER DATE

7-26-10
PLANS APPROVAL DATE

REGISTERED PROFESSIONAL ENGINEER DANIEL THANH VO No. 17408 Exp. 9/30/10 ELECTRICAL STATE OF CALIFORNIA

THE STATE OF CALIFORNIA OR ITS OFFICERS OR AGENTS SHALL NOT BE RESPONSIBLE FOR THE ACCURACY OR COMPLETENESS OF ELECTRONIC COPIES OF THIS PLAN SHEET.

Caltrans Metric

NOTES: (FOR THIS SHEET ONLY):

1. CCTV POWER CORD
2. SIC-USE 2 PAIR FOR EIA-422 PAN/TILT/ZOOM COMMUNICATION BETWEEN THE CCTV CAMERA AND VIDEO ENCODER. ONE PAIR WILL REMAIN AS A SPARE. (COLORS MAY VARY).
3. OCC (OUTDOOR CAT5E CABLE). PLUG INTO THE RJ-45 DATA PORT IN THE CCTV DOME CAMERA ASSEMBLY.
4. RG-6U COAXIAL CABLE: CENTER CONDUCTOR: 18 AWG SOLID COPPER
   BRAID SHIELD: WOVEN COPPER BRAID WITH MINIMIM 80% COVERAGE (ALUMINUM FOIL SHIELDING OR FOIL WRAP IS NOT ACCEPTABLE)
   DIELECTRIC INSULATING MATERIAL: POLYURETHANE OR POLYETHYLENE
   OUTER JACKET: BLACK PVC
5. COAXIAL CABLE SURGE/LIGHTNING PROTECTOR: SURGE HANDLING: 5 kA; IMPEDANCE: 75 OHMS
   INSERTION LOSS: <0.1dB @ 500 MHz, CONNECTORS: TYPE F OR BNC
6. EQUIPMENT FURNISHED AND INSTALLED BY SERVICE TELCO COMPANY.
7. STATE-FURNISHED MATERIAL WILL BE INSTALLED BY STATE FORCES.

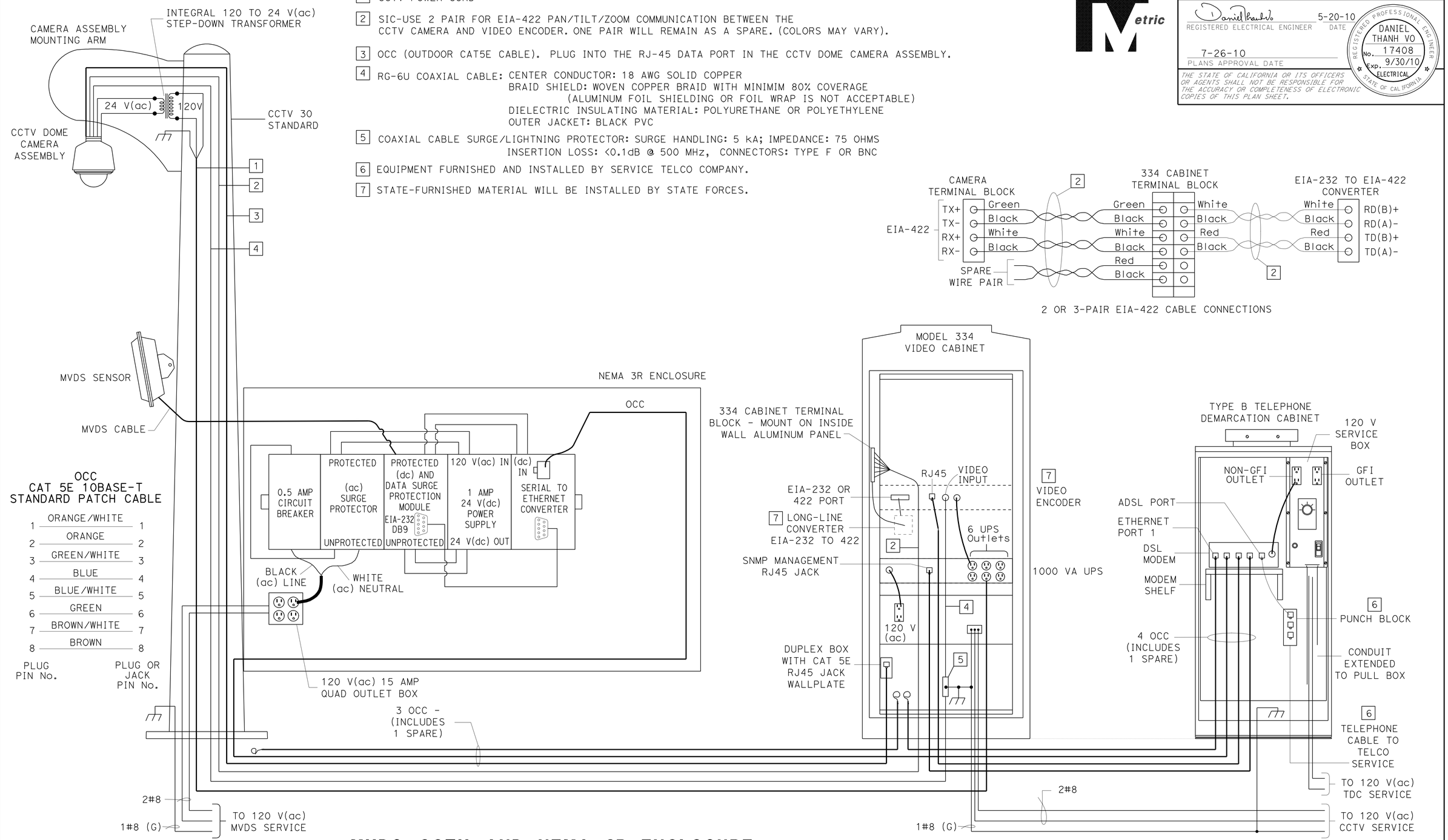

MVDS, CCTV, AND NEMA 3R ENCLOSURE WIRING DETAIL

MICROWAVE VEHICLE DETECTION SYSTEM
CLOSED CIRCUIT TELEVISION SYSTEM

THIS PLAN IS ACCURATE FOR ELECTRICAL WORK ONLY.

ALL DIMENSIONS ARE IN MILLIMETERS UNLESS OTHERWISE SHOWN

NO SCALE

E-28

STATE OF CALIFORNIA - DEPARTMENT OF TRANSPORTATION
Caltrans 06-ELECTRICAL DESIGN

FUNCTIONAL SUPERVISOR: ALI BAKHDOUD
CALCULATED-DESIGNED BY: KARIM ABDOLLAHIAN
CHECKED BY: DANIEL T. VO
REVISED BY / DATE REVISED

LAST REVISION 05-18-10
DATE PLOTTED => 10-AUG-2010
TIME PLOTTED => 13:30

Dist	COUNTY	ROUTE	KILOMETER POST TOTAL PROJECT	SHEET No.	TOTAL SHEETS
05	Mon	101	R146.8/159.7	1092	1402

Caltrans Metric

REGISTERED ELECTRICAL ENGINEER — DATE 5-20-10

7-26-10
PLANS APPROVAL DATE

REGISTERED PROFESSIONAL ENGINEER — DANIEL THANH VO — No. 17408 — Exp. 9/30/10 — ELECTRICAL — STATE OF CALIFORNIA

THE STATE OF CALIFORNIA OR ITS OFFICERS OR AGENTS SHALL NOT BE RESPONSIBLE FOR THE ACCURACY OR COMPLETENESS OF ELECTRONIC COPIES OF THIS PLAN SHEET.

NOTES: (FOR THIS SHEET ONLY)

1. COAXIAL CABLE SURGE/LIGHTNING PROTECTOR: SURGE HANDLING: 5 kA; IMPEDANCE: 75 OHMS;
2. SIC - USE TWO PAIR FOR EIA-422 PAN/TILT/ZOOM COMMUNICATION BETWEEN THE CCTV CAMERA AND VIDEO ENCODER, ONE PAIR WILL REMAIN AS A SPARE (COLORS MAY VARY).
3. OCC (OUTDOOR CAT5E CABLE). PLUG INTO THE RJ-45 DATA PORT IN THE CCTV DOME CAMERA ASSEMBLY.
4. RG-6U COAXIAL CABLE: CENTER CONDUCTOR: 18 AWG SOLID COPPER; BRAID SHIELD: WOVEN COPPER BRAID WITH MINIMUM 80% COVERAGE (ALUMINUM FOIL SHIELDING OR FOIL WRAP IS NOT ACCEPTABLE); DIELECTRIC INSULATING MATERIAL: POLYURETHANE OR POLYETHYLENE; OUTER JACKET: BLACK PVC
5. STATE-FURNISHED MATERIAL WILL BE INSTALLED BY STATE FORCES.

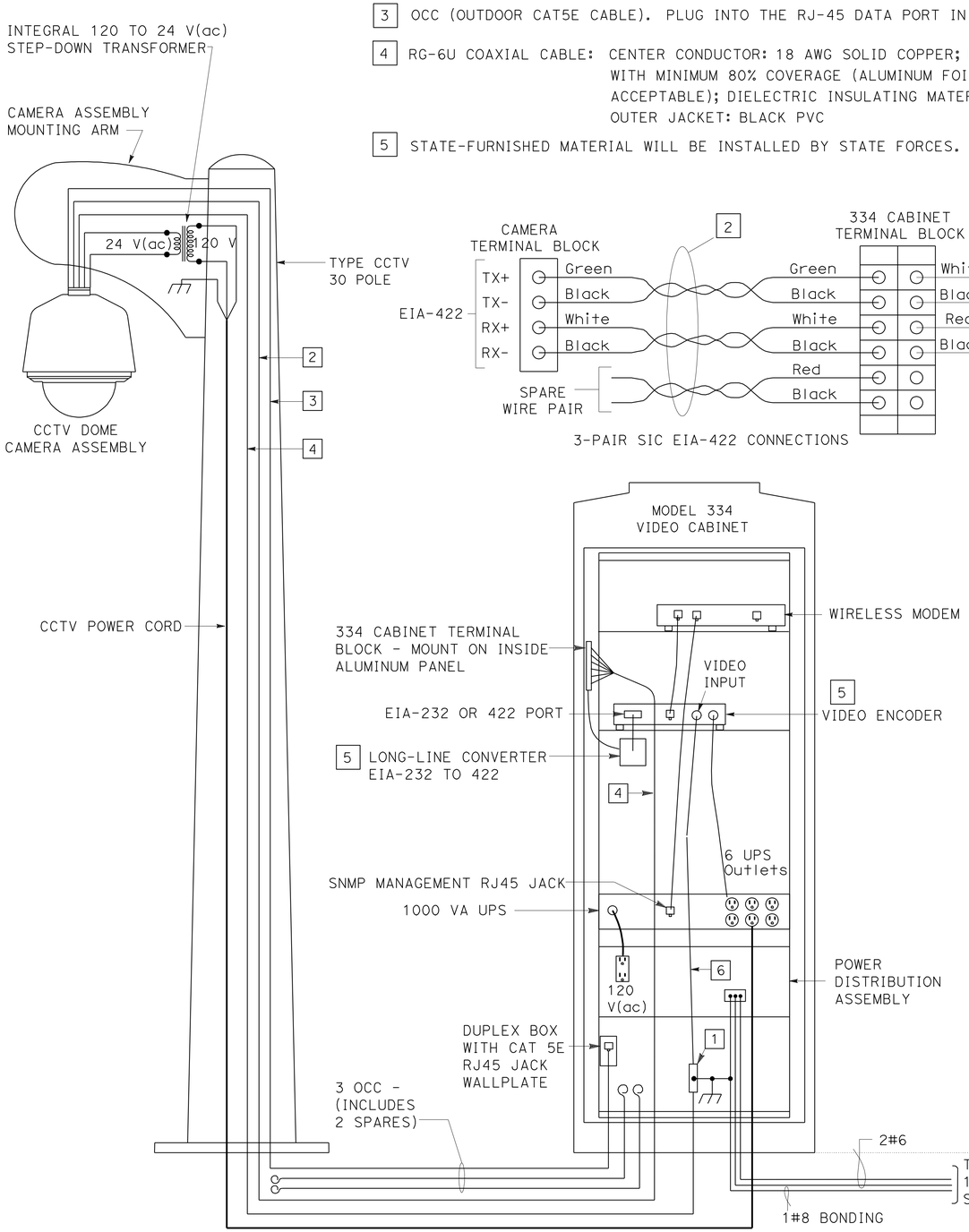

WIRELESS CCTV WIRING DETAIL

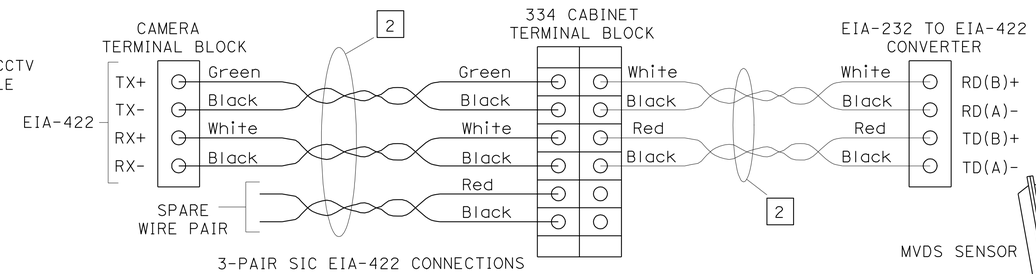

OCC CAT 5E 10BASE-T STANDARD PATCH CABLE

PLUG PIN No.		PLUG OR JACK PIN No.
1	ORANGE/WHITE	1
2	ORANGE	2
3	GREEN/WHITE	3
4	BLUE	4
5	BLUE/WHITE	5
6	GREEN	6
7	BROWN/WHITE	7
8	BROWN	8

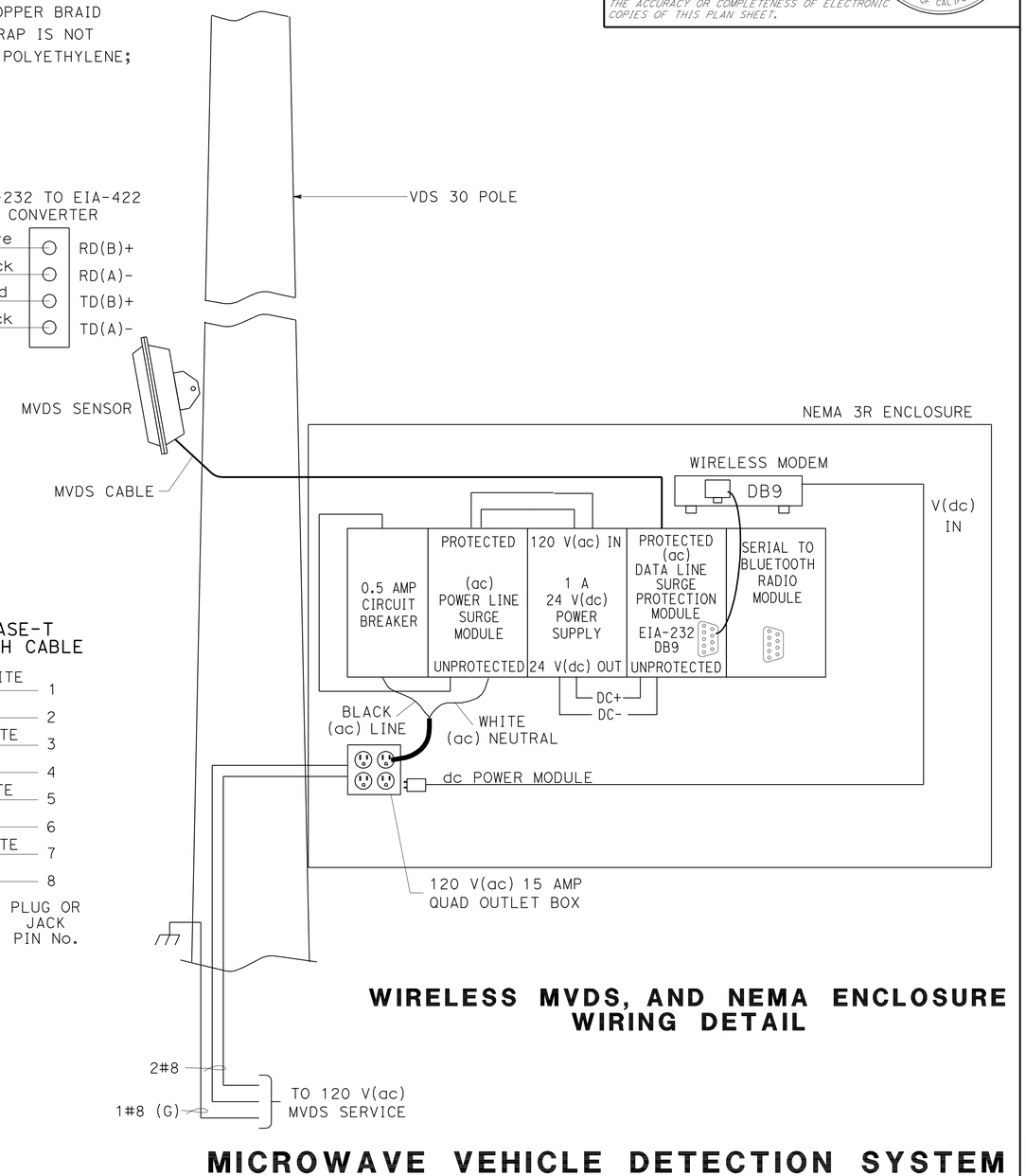

WIRELESS MVDS, AND NEMA ENCLOSURE WIRING DETAIL

MICROWAVE VEHICLE DETECTION SYSTEM
CLOSED CIRCUIT TELEVISION SYSTEM
(WIRELESS)

ALL DIMENSIONS ARE IN MILLIMETERS UNLESS OTHERWISE SHOWN

NO SCALE

E-29

THIS PLAN IS ACCURATE FOR ELECTRICAL WORK ONLY.

STATE OF CALIFORNIA - DEPARTMENT OF TRANSPORTATION
Caltrans 06-ELECTRICAL DESIGN

FUNCTIONAL SUPERVISOR: ALI BAKHDOUD
CALCULATED-DESIGNED BY: KARIM ABDOLLAHIAN
CHECKED BY: DANIEL T. VO
REVISED BY / DATE REVISED

LAST REVISION 05-18-10 | DATE PLOTTED => 10-AUG-2010 | TIME PLOTTED => 13:30

Dist	COUNTY	ROUTE	KILOMETER POST TOTAL PROJECT	SHEET No.	TOTAL SHEETS
05	Mon	101	R146.8/159.7	1093	1402

Caltrans Metric

REGISTERED ELECTRICAL ENGINEER — DATE 5-20-10

7-26-10
PLANS APPROVAL DATE

REGISTERED PROFESSIONAL ENGINEER — DANIEL THANH VO — No. 17408 — Exp. 9/30/10 — ELECTRICAL — STATE OF CALIFORNIA

THE STATE OF CALIFORNIA OR ITS OFFICERS OR AGENTS SHALL NOT BE RESPONSIBLE FOR THE ACCURACY OR COMPLETENESS OF ELECTRONIC COPIES OF THIS PLAN SHEET.

PROJECT NOTES (FOR THIS SHEET ONLY):

1. CCTV POWER CORD
2. SIC - USE TWO PAIR FOR EIA-422 PAN/TILT/ZOOM COMMUNICATION BETWEEN THE CCTV CAMERA AND VIDEO ENCODER, ONE PAIR WILL REMAIN AS A SPARE (COLORS MAY VARY).
3. OCC (OUTDOOR CAT5E CABLE). PLUG INTO THE RJ-45 DATA PORT IN THE CCTV DOME CAMERA ASSEMBLY.
4. RG-6U COAXIAL CABLE: CENTER CONDUCTOR: 18 AWG SOLID COPPER
   BRAID SHIELD: WOVEN COPPER BRAID WITH MINIMUM 80% COVERAGE (ALUMINUM FOIL SHIELDING OR FOIL WRAP IS NOT ACCEPTABLE)
   DIELECTRIC INSULATING MATERIAL: POLYURETHANE OR POLYETHYLENE
   OUTER JACKET: BLACK PVC
5. COAXIAL CABLE SURGE/LIGHTNING PROTECTOR: SURGE HANDLING: 5 kA; IMPEDANCE: 75 OHMS
   INSERTION LOSS: <0.1dB @ 500 MHz, CONNECTORS: TYPE F OR BNC
6. EQUIPMENT FURNISHED AND INSTALLED BY SERVICE TELCO COMPANY.
7. STATE-FURNISHED MATERIAL WILL BE INSTALLED BY STATE FORCES.

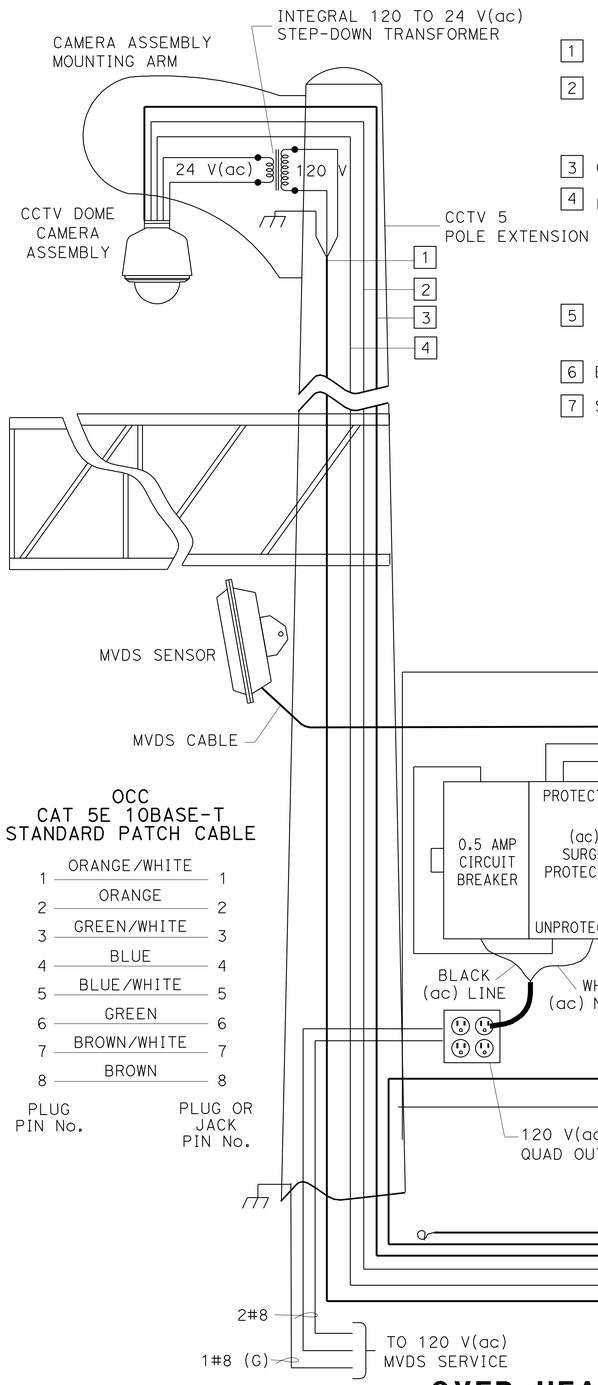

OCC CAT 5E 10BASE-T STANDARD PATCH CABLE

PLUG PIN No.		PLUG OR JACK PIN No.
1	ORANGE/WHITE	1
2	ORANGE	2
3	GREEN/WHITE	3
4	BLUE	4
5	BLUE/WHITE	5
6	GREEN	6
7	BROWN/WHITE	7
8	BROWN	8

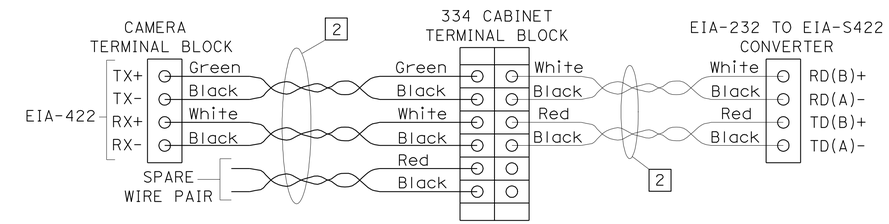

2 OR 3-PAIR EIA-422 CABLE CONNECTIONS

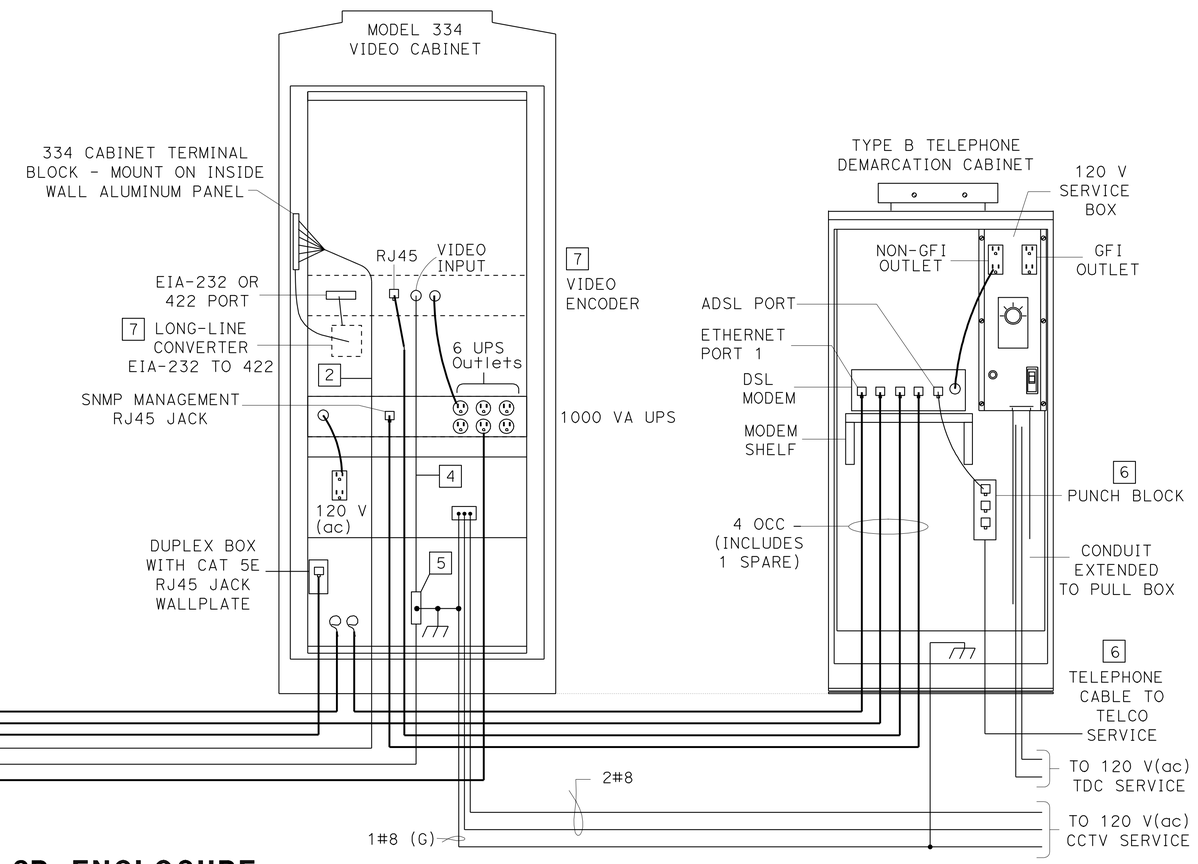

OVER HEAD SIGN MVDS, CCTV, AND NEMA 3R ENCLOSURE WIRING DETAIL

MICROWAVE VEHICLE DETECTION SYSTEM CLOSED CIRCUIT TELEVISION SYSTEM

ALL DIMENSIONS ARE IN MILLIMETERS UNLESS OTHERWISE SHOWN

NO SCALE

THIS PLAN IS ACCURATE FOR ELECTRICAL WORK ONLY.

E-30

STATE OF CALIFORNIA - DEPARTMENT OF TRANSPORTATION
Caltrans 06-ELECTRICAL DESIGN

FUNCTIONAL SUPERVISOR: ALI BAKHDOUD
CALCULATED-DESIGNED BY: KARIM ABDOLLAHIAN
CHECKED BY: DANIEL T. VO
REVISED BY / DATE REVISED

LAST REVISION 05-18-10
DATE PLOTTED => 10-AUG-2010
TIME PLOTTED => 13:30

DIST	COUNTY	ROUTE	KILOMETER POST TOTAL PROJECT	SHEET No	TOTAL SHEETS
05	Mon	101	R146.8/159.7	1094	1402

Eliseo Lopez 5/28/09
REGISTERED CIVIL ENGINEER

7-26-10
PLANS APPROVAL DATE

REGISTERED PROFESSIONAL ENGINEER ELISEO LOPEZ No. C72910 Exp. 12/31/10 CIVIL STATE OF CALIFORNIA

The State of California or its officers or agents shall not be responsible for the accuracy or completeness of electronic copies of this plan sheet.

Caltrans Metric

TABLE A

POLE TYPE	POLE DATA: HEIGHT "h" (m)	MIN OD (mm) BASE	MIN OD (mm) TOP	THICKNESS (mm)	BASE PLATE DATA: "C" (mm)	THICKNESS (mm)	ANCHOR BOLTS: SIZE (mm)	ANCHOR BOLTS: BC = BOLT CIRCLE (mm)	"d" 610 mm Ø CIDH PILE: LEVEL GROUND	"d" 610 mm Ø CIDH PILE: SLOPING GROUND	STRUCTURAL STEEL kg PLUS 3.5% GALVANIZING
VDS-30	9.14	203	98	4.55	305	25.4	25 Ø x 920 x 102	279	2.45 m	3.05 m	215
CCTV 30	9.14	203	98	4.55	305	25.4	25 Ø x 920 x 102	279	2.45 m	3.05 m	215

TABLE B

ATTACHMENT	MOUNTING HEIGHT
ENCLOSURE	1.4 m max. bottom clr.
MVDS	4.9 m - 8.2 m max.

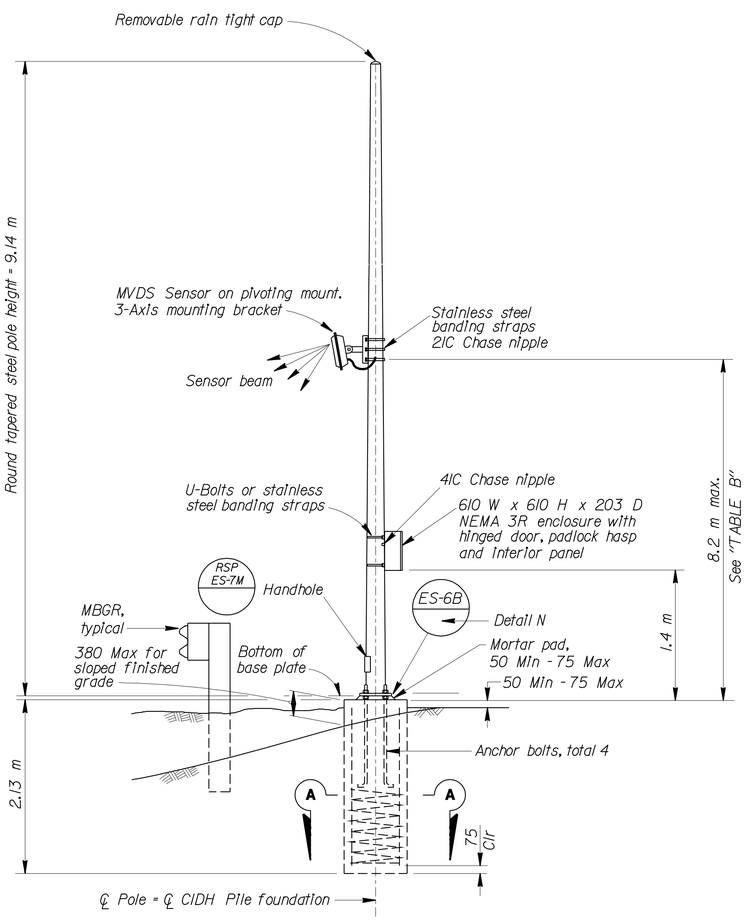

ELEVATION
VDS-30 POLE

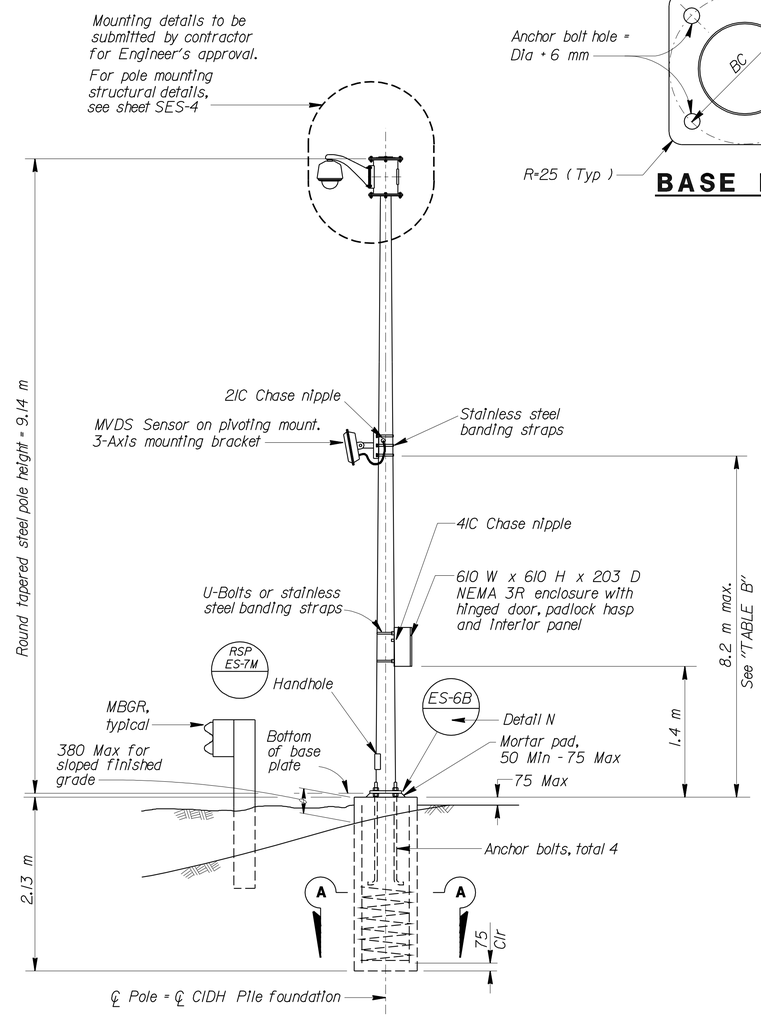

ELEVATION
CCTV 30 POLE

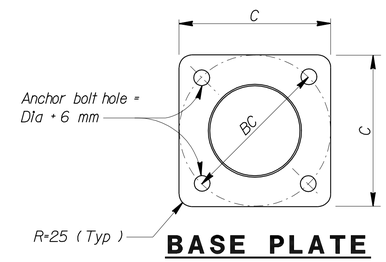

BASE PLATE

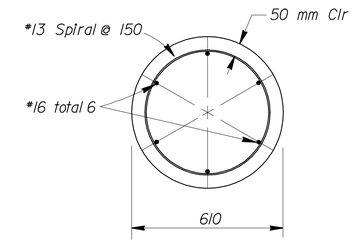

SECTION A-A

DESIGN NOTES:

SPECIFICATIONS

Design : AASHTO Standard Specifications for Structural Supports for Highway Signs, Luminaires and Traffic Signals dated 2001.

LOADING

Wind Loadings : 161 km/h

UNIT STRESSES

Structural Steel : fy = 330 MPa tapered steel tube
fy = 250 MPa unless otherwise noted.

Anchor bolts = A307
Reinforced Concrete : f'c = 25 MPa
fy = 415 MPa

NOTES:

1. All steel shall be galvanized after fabrication.
2. During pole erection the post shall be raked as necessary with the use of leveling nuts to provide a plumb pole axis.
3. The foundation shall be treated as level ground condition if the slope inclination is flatter than 4H : 1V.
4. For details not shown, see 2004 "STANDARD PLANS" and 2004 "REVISED STANDARD PLANS".

NOTE:
THE CONTRACTOR SHALL VERIFY ALL CONTROLLING FIELD DIMENSIONS BEFORE ORDERING OR FABRICATING ANY MATERIAL.

STANDARD PLAN SHEET NO.
DETAIL NO.

ALL DIMENSIONS ARE IN MILLIMETERS UNLESS OTHERWISE SHOWN

ELECTRICAL SYSTEMS
MICROWAVE VEHICLE DETECTION SYSTEM
CLOSED CIRCUIT TELEVISION SYSTEM
POLE DETAILS

NO SCALE

SES-1

R. YEE	E. LOPEZ	
DETAILS	QUANTITIES	
DATE 4/22/09	4/22/09	
E. LOPEZ	A. GUTIERREZ	
CALCULATED/DESIGNED BY	CHECKED BY	

PROJECT ENGINEER: ELISEO LOPEZ

STATE OF CALIFORNIA - DEPARTMENT OF TRANSPORTATION
Caltrans SPECIAL DESIGNS BRANCH

LAST REVISION 7/23/10 | DATE PLOTTED => 03-AUG-2010 | TIME PLOTTED => 10:52

ORIGINAL SCALE IN MILLIMETERS FOR REDUCED PLANS 0 10 20 30 40 50 60 70 80 90 100

USERNAME => trmariak
DGN FILE => spec_des_br_proj/2009sd/05_0161e1/ses-1.dgn

CU 05 | EA 0161E1

DIST	COUNTY	ROUTE	KILOMETER POST TOTAL PROJECT	SHEET No	TOTAL SHEETS
05	Mon	101	R146.8/159.7	1095	1402

Eliseo Lopez 5/28/09
REGISTERED CIVIL ENGINEER

7-26-10
PLANS APPROVAL DATE

REGISTERED PROFESSIONAL ENGINEER ELISEO LOPEZ No. C72910 Exp. 12/31/10 CIVIL STATE OF CALIFORNIA

The State of California or its officers or agents shall not be responsible for the accuracy or completeness of electronic copies of this plan sheet.

Caltrans Metric

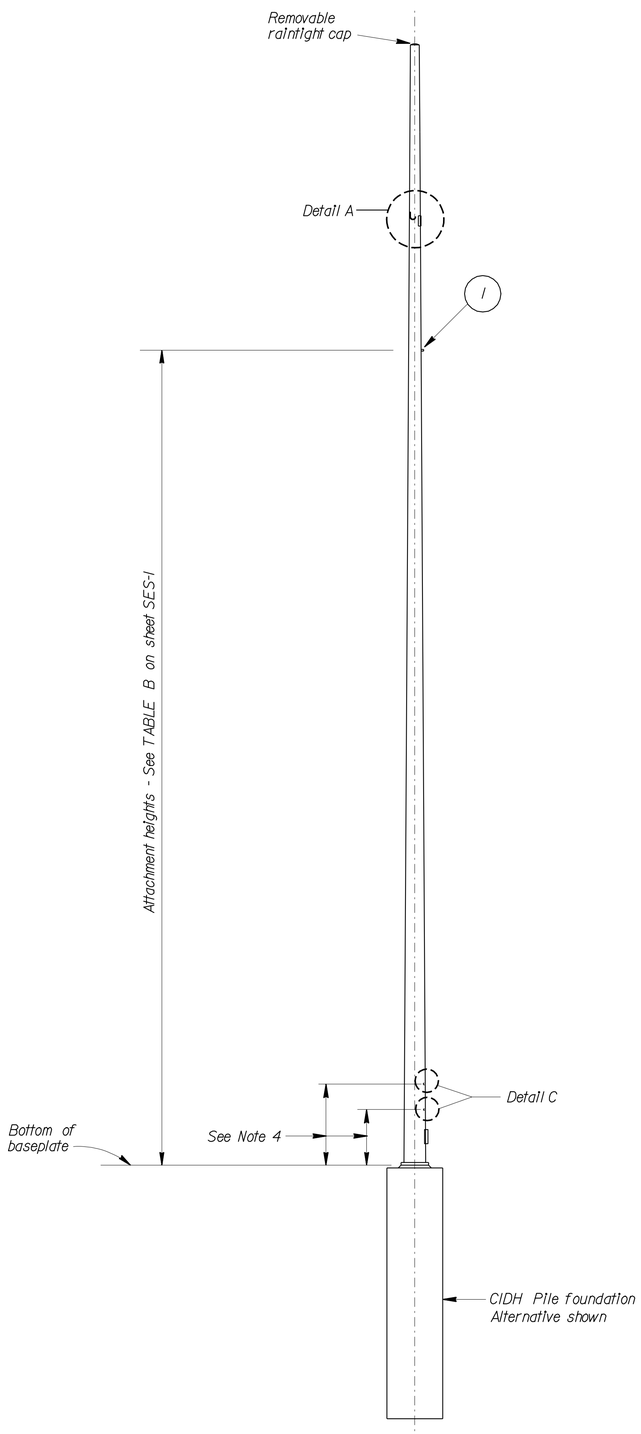

ELEVATION
VDS-30

NOTE:
THE CONTRACTOR SHALL VERIFY ALL CONTROLLING FIELD DIMENSIONS BEFORE ORDERING OR FABRICATING ANY MATERIAL.

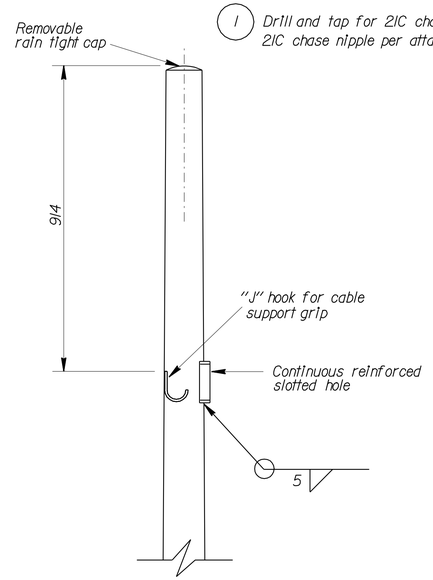

DETAIL A

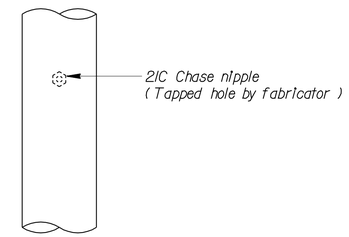

DETAIL B
TYPICAL ELECTRICAL ACCESS DETAIL

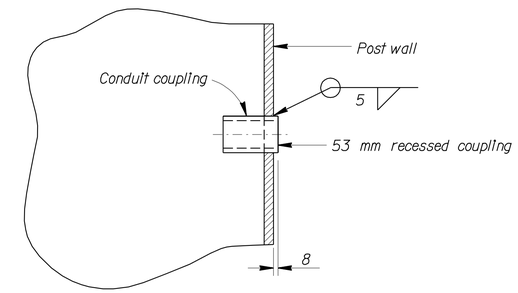

DETAIL C
53 mm RECESSED COUPLING - TYPICAL

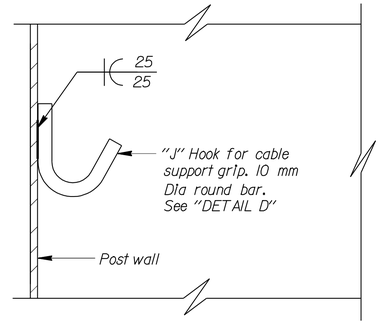

J HOOK DETAIL

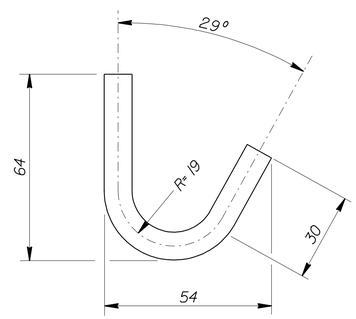

DETAIL D

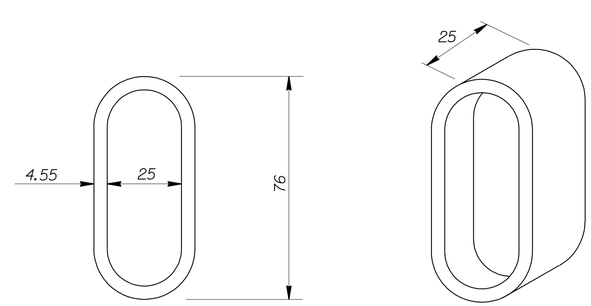

SLOTTED HOLE

NOTES:

1. Place all couplings on the same side of pole.
2. Chase nipples and slotted hole shall have a rain tight plug. Plug should only be removed if chase nipple or slotted hole is used.
3. For attachment details, see sheet SES-1.
4. Coupling location above ground and spacing shall be verified to match choice of enclosure, prior to fabrication.
5. All attachments, unless otherwise noted, shall be mounted to pole with stainless steel straps or other method without drilling holes in pole. Enclosure may require drilling through post for mounting. Method of mounting enclosure will require Engineer's approval.

ALL DIMENSIONS ARE IN MILLIMETERS UNLESS OTHERWISE SHOWN

ELECTRICAL SYSTEMS
MICROWAVE VEHICLE DETECTION SYSTEM
CLOSED CIRCUIT TELEVISION SYSTEM
POLE DETAILS

NO SCALE

SES-2

CALCULATED/DESIGNED BY	E. LOPEZ	DATE 4/21/09	DETAILS R. YEE
CHECKED BY	A. GUTIERREZ	4/21/09	QUANTITIES E. LOPEZ

PROJECT ENGINEER: ELISEO LOPEZ

STATE OF CALIFORNIA - DEPARTMENT OF TRANSPORTATION
Caltrans SPECIAL DESIGNS BRANCH

ORIGINAL SCALE IN MILLIMETERS FOR REDUCED PLANS 0 10 20 30 40 50 60 70 80 90 100

USERNAME => trmariak
DGN FILE => spec_des_br_proj/2009sd/05_0161e1/ses-2.dgn

CU 05 | EA 0161E1

LAST REVISION 7/23/10 | DATE PLOTTED => 03-AUG-2010 TIME PLOTTED => 10:53

DIST	COUNTY	ROUTE	KILOMETER POST TOTAL PROJECT	SHEET No	TOTAL SHEETS
05	Mon	101	R146.8/159.7	1096	1402

Eliseo Lopez 5/28/09
REGISTERED CIVIL ENGINEER

7-26-10
PLANS APPROVAL DATE

REGISTERED PROFESSIONAL ENGINEER ELISEO LOPEZ No. C72910 Exp. 12/31/10 CIVIL STATE OF CALIFORNIA

The State of California or its officers or agents shall not be responsible for the accuracy or completeness of electronic copies of this plan sheet.

Caltrans Metric

POLE EXTENSION TYPE	POLE DATA			
	HEIGHT (m)	Min OD (mm) BASE	Min OD (mm) TOP	THICKNESS (mm)
CCTV 5	1.5	116	98	4.55

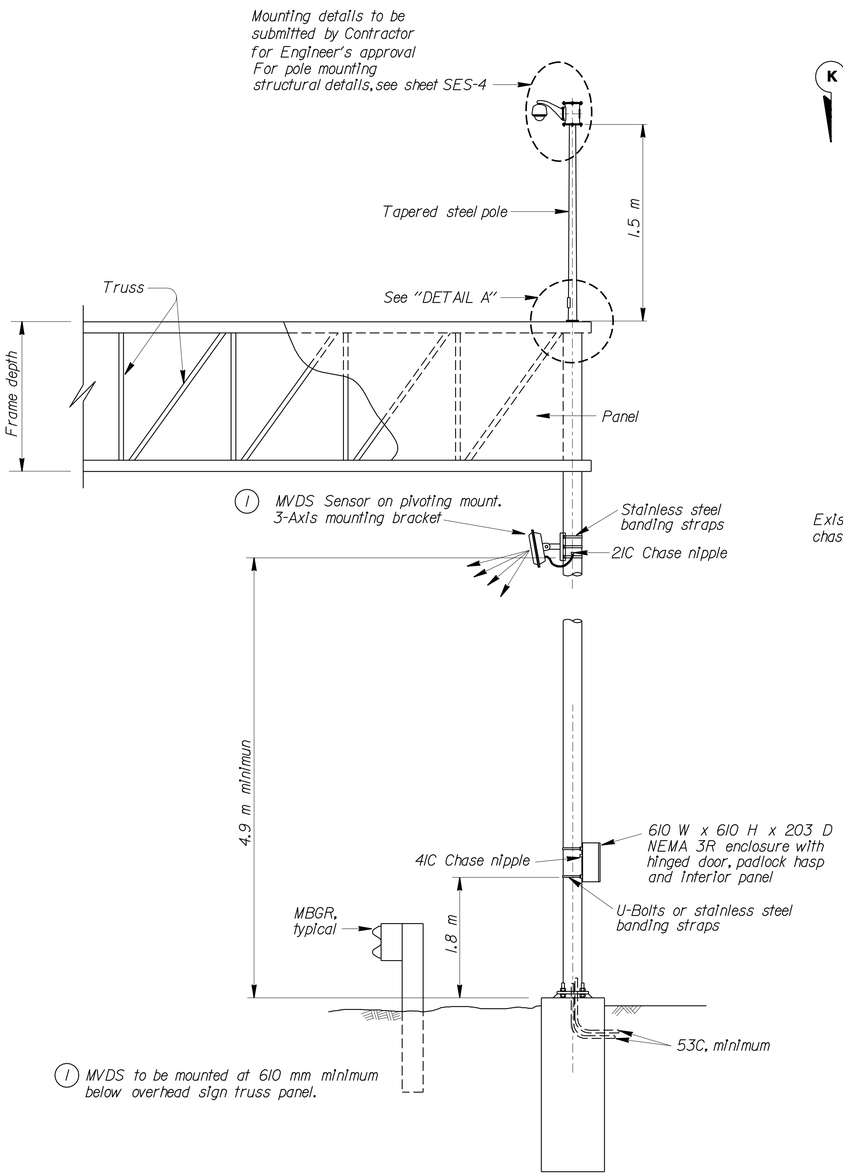

ELEVATION

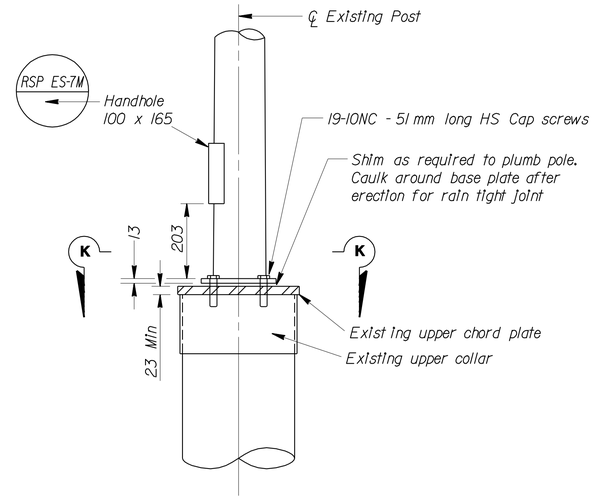

DETAIL A

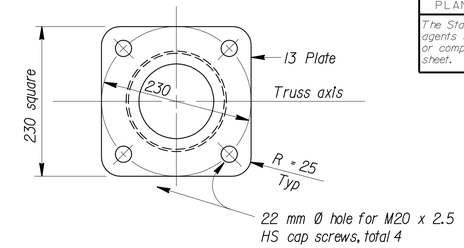

SECTION K-K

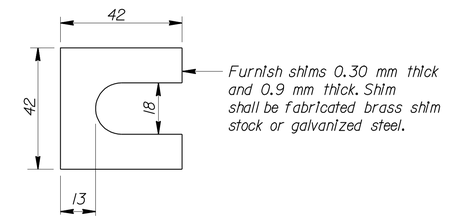

SHIM DETAIL

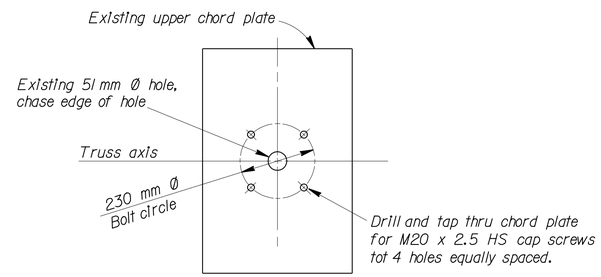

UPPER CHORD PLATE

RSP S13

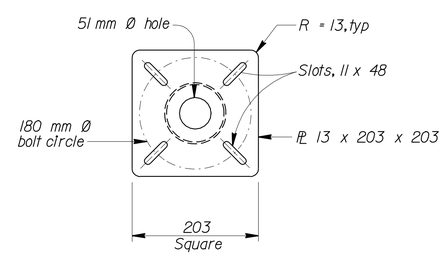

CAMERA MOUNTING PLATE

HIGH STRENGTH CAP SCREWS

16 - 11NC - 45
- Length (mm)
- Threads (per mm)
- Size (mm)

GENERAL NOTES:

SPECIFICATIONS

Design : AASHTO Standard Specifications for Structural Supports for Highway Signs, Luminaires and Traffic Signals, dated 2001.

LOADING

Wind Loadings : 161 km/h AASHTO

UNIT STRESSES

Structural Steel: fy = 330 MPa tapered steel tube
fy = 250 MPa unless otherwise noted

NOTES:

1. All steel shall be galvanized after fabrication.
2. Bolt hole locations may vary at the discretion of the Engineer.
3. For details not shown, see 2004 "STANDARD PLANS" and 2004 "REVISED STANDARD PLANS".

NOTE:
THE CONTRACTOR SHALL VERIFY ALL CONTROLLING FIELD DIMENSIONS BEFORE ORDERING OR FABRICATING ANY MATERIAL.

STANDARD PLAN SHEET NO.
DETAIL NO.

ALL DIMENSIONS ARE IN MILLIMETERS UNLESS OTHERWISE SHOWN

MICROWAVE VEHICLE DETECTION SYSTEM CLOSED CIRCUIT TELEVISION SYSTEM ON NEW STANDARD OVERHEAD SIGN MOUNTING DETAILS

NO SCALE

SES-3

R. YEE	E. LOPEZ	
DETAILS	QUANTITIES	
DATE 4/21/09	4/21/09	
E. LOPEZ	A. GUTIERREZ	
CALCULATED/DESIGNED BY	CHECKED BY	

PROJECT ENGINEER
ELISEO LOPEZ

STATE OF CALIFORNIA - DEPARTMENT OF TRANSPORTATION
Caltrans SPECIAL DESIGNS BRANCH

LAST REVISION 7/23/10
DATE PLOTTED => 03-AUG-2010
TIME PLOTTED => 10:53

ORIGINAL SCALE IN MILLIMETERS FOR REDUCED PLANS 0 10 20 30 40 50 60 70 80 90 100

USERNAME => trmariak
DGN FILE => spec_des_br_proj/2009sd/05_0161e1/ses-3.dgn

CU 05 | EA 0161E1

DIST	COUNTY	ROUTE	KILOMETER POST TOTAL PROJECT	SHEET No	TOTAL SHEETS
05	Mon	101	R146.8/159.7	1097	1402

Eliseo Lopez 5/28/09
REGISTERED CIVIL ENGINEER

7-26-10
PLANS APPROVAL DATE

REGISTERED PROFESSIONAL ENGINEER ELISEO LOPEZ No. C72910 Exp. 12/31/10 CIVIL STATE OF CALIFORNIA

The State of California or its officers or agents shall not be responsible for the accuracy or completeness of electronic copies of this plan sheet.

Caltrans Metric

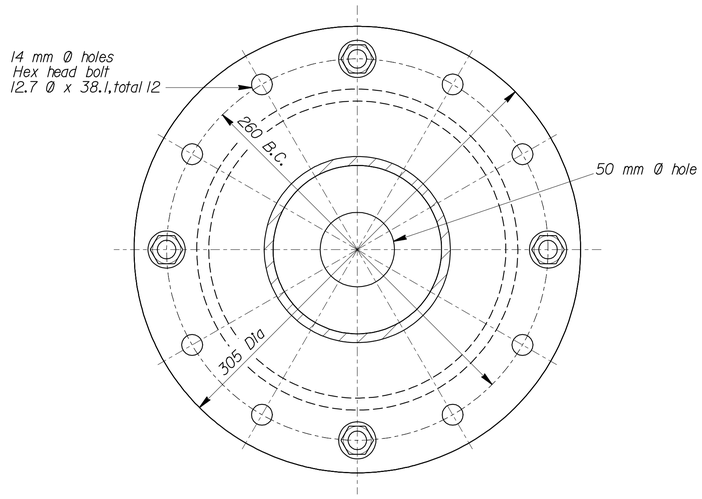

SECTION A-A

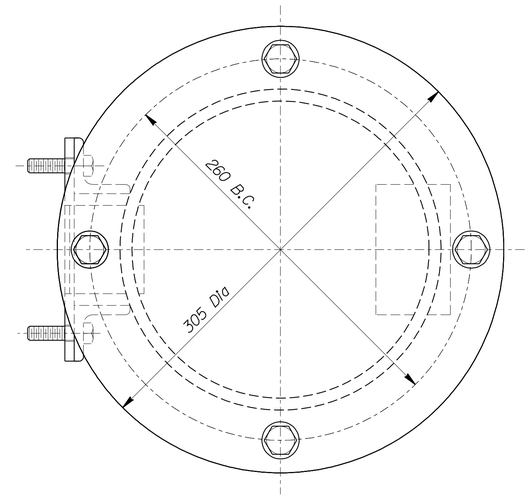

PLAN

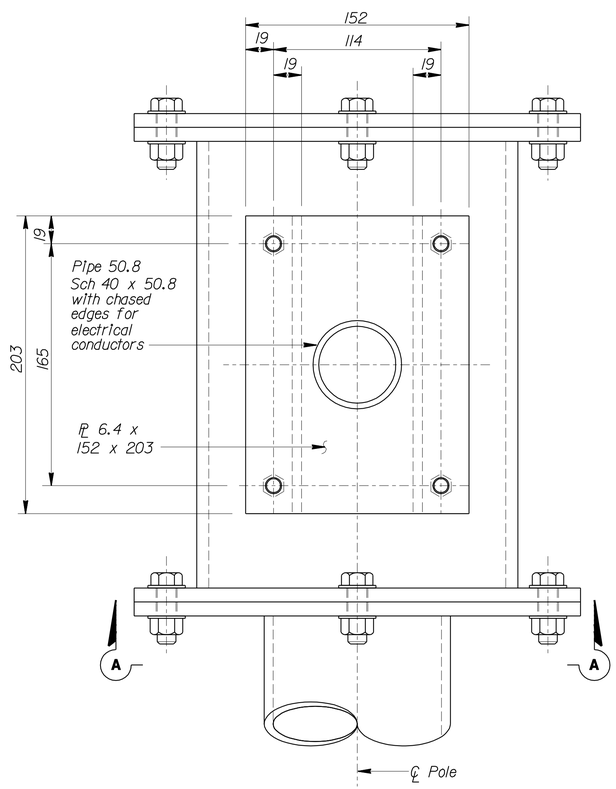

LEFT SIDE

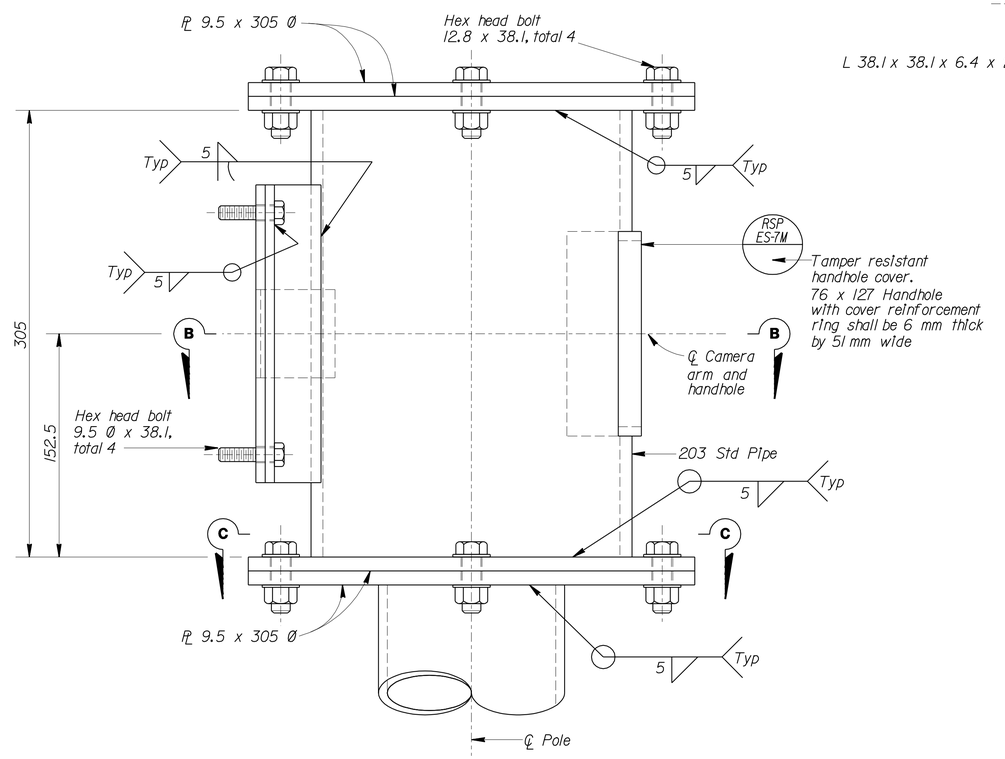

FRONT

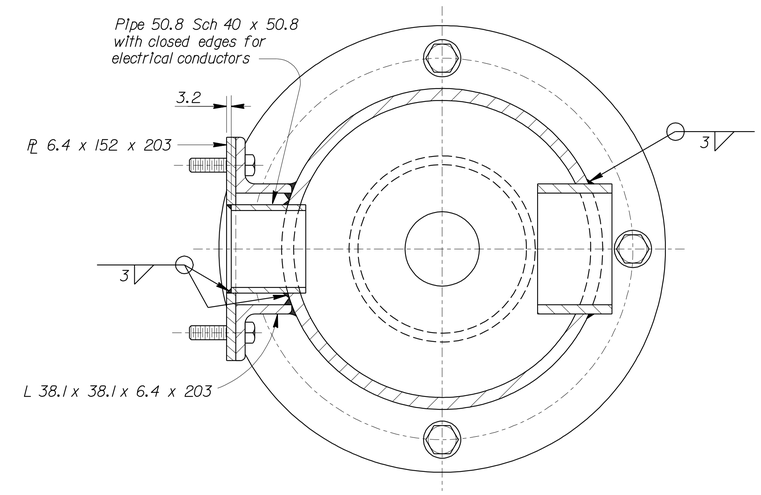

SECTION B-B

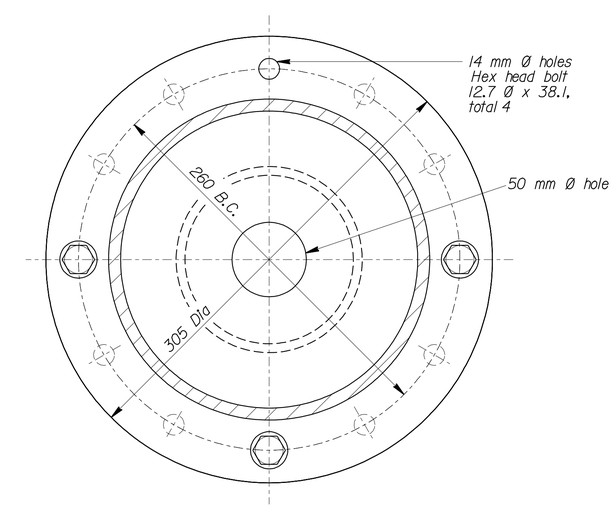

SECTION C-C

NOTE:
THE CONTRACTOR SHALL VERIFY ALL CONTROLLING FIELD DIMENSIONS BEFORE ORDERING OR FABRICATING ANY MATERIAL.

ALL DIMENSIONS ARE IN MILLIMETERS UNLESS OTHERWISE SHOWN

ELECTRICAL SYSTEMS
CLOSED CIRCUIT TELEVISION SYSTEM
POLE MOUNTING DETAILS

NO SCALE

SES-4

R. YEE	DETAILS	DATE 4/22/09	CALCULATED/ DESIGNED BY
E. LOPEZ	QUANTITIES	4/22/09	CHECKED BY

S. VU
E. LOPEZ
A. GUTIERREZ

PROJECT ENGINEER
ELISEO LOPEZ

STATE OF CALIFORNIA - DEPARTMENT OF TRANSPORTATION
Caltrans SPECIAL DESIGNS BRANCH

LAST REVISION 7/23/10
DATE PLOTTED => 03-AUG-2010
TIME PLOTTED => 10:53

ORIGINAL SCALE IN MILLIMETERS FOR REDUCED PLANS 0 10 20 30 40 50 60 70 80 90 100

USERNAME => trmariak
DGN FILE => spec_des_br_proj/2009sd/05_0161e1/ses-4.dgn

CU 05

EA 0161E1

DIST	COUNTY	ROUTE	KILOMETER POST TOTAL PROJECT	SHEET NO.	TOTAL SHEETS
05	Mon	101	R146.8/159.7	1098	1402

Caltrans Metric

Donald E Howe
REGISTERED CIVIL ENGINEER

June 6, 2008
PLANS APPROVAL DATE

REGISTERED PROFESSIONAL ENGINEER Donald E. Howe No. C46402 Exp. 3-31-09 CIVIL STATE OF CALIFORNIA

The State of California or its officers or agents shall not be responsible for the accuracy or completeness of electronic copies of this plan sheet.

To get to the Caltrans web site, go to: http://www.dot.ca.gov

To accompany plans dated 7-26-10

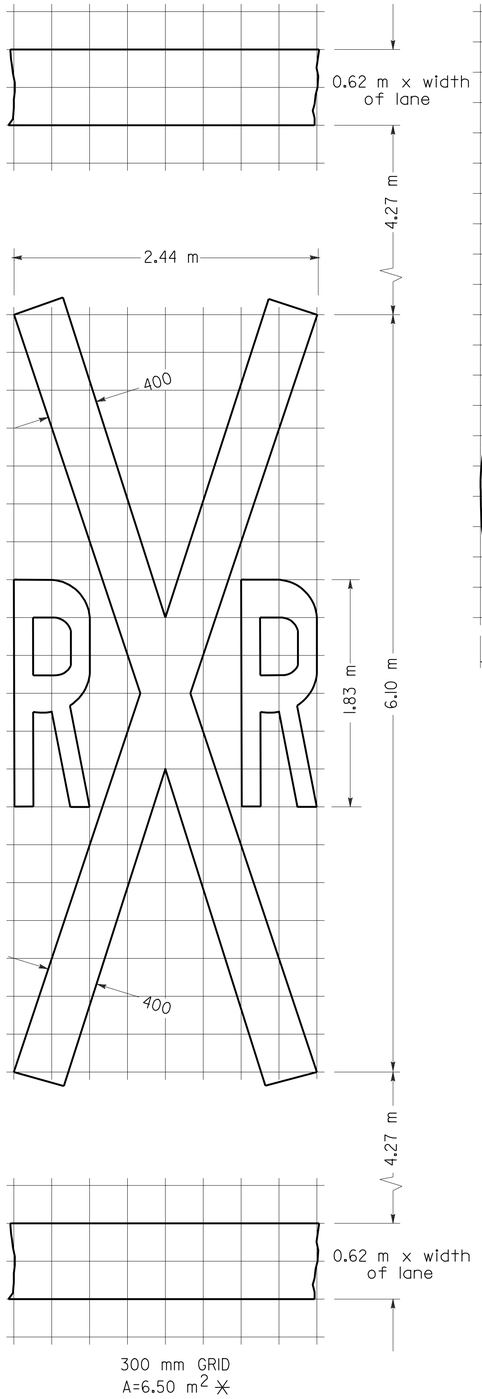

RAILROAD CROSSING SYMBOL

✳6.5 m^2 DOES NOT INCLUDE THE 0.6 m x VARIABLE WIDTH TRANSVERSE LINES.

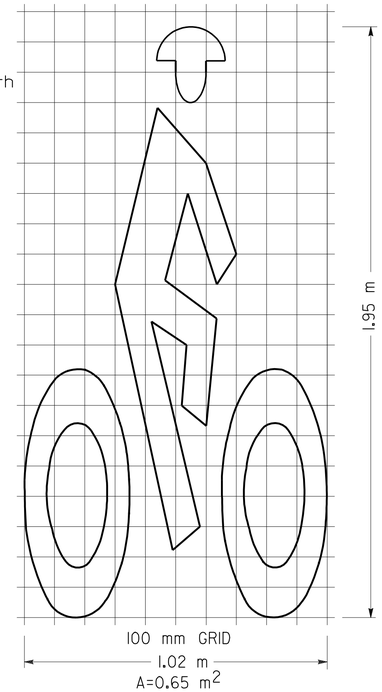

BIKE LANE SYMBOL

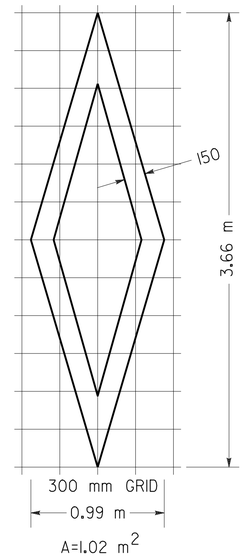

DIAMOND SYMBOL

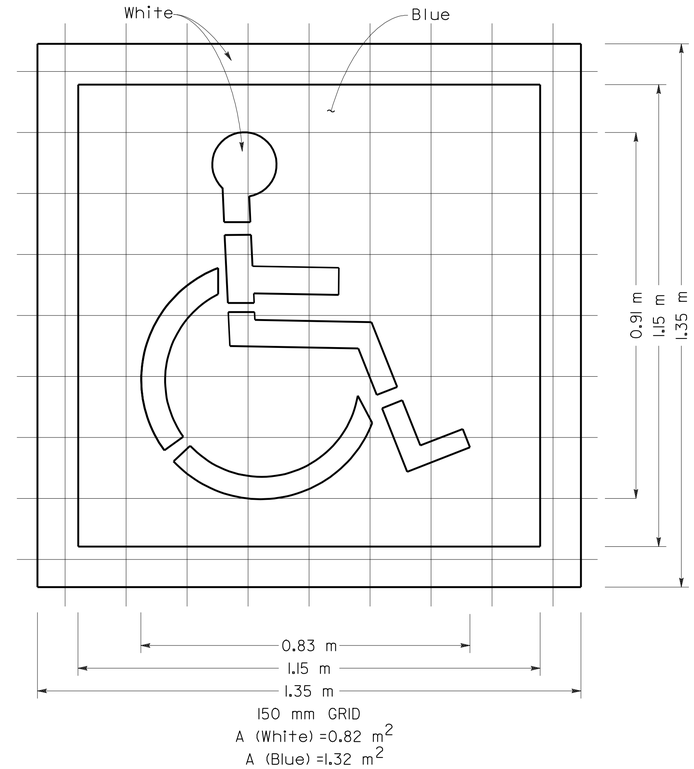

INTERNATIONAL SYMBOL OF ACCESSIBILITY MARKING

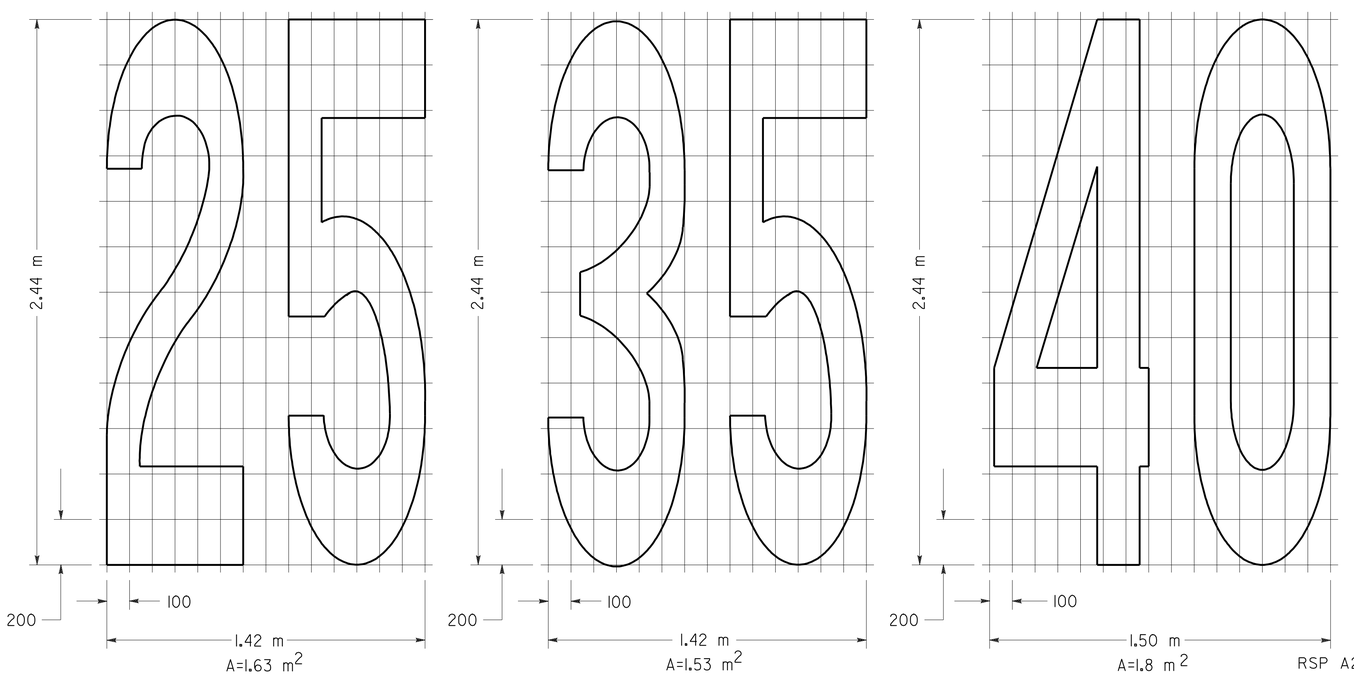

NUMERALS

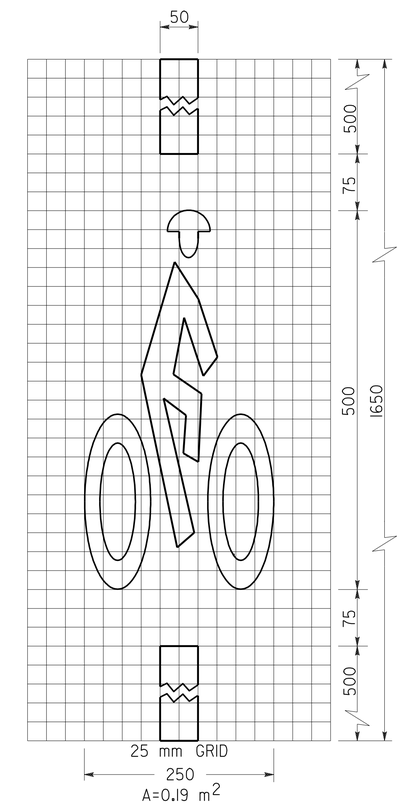

BICYCLE LOOP DETECTOR SYMBOL

NOTE:

1. Minor variations in dimensions may be accepted by the Engineer.

STATE OF CALIFORNIA
DEPARTMENT OF TRANSPORTATION

PAVEMENT MARKINGS SYMBOLS AND NUMERALS

NO SCALE

ALL DIMENSIONS ARE IN MILLIMETERS UNLESS OTHERWISE SHOWN

RSP A24C DATED JUNE 6, 2008 SUPERSEDES STANDARD PLAN A24C DATED July 1, 2004 - PAGE 11 OF THE STANDARD PLANS BOOK DATED July 2004.

REVISED STANDARD PLAN RSP A24C

2004 REVISED Std PLAN RSP A24C

5-27-08

DIST	COUNTY	ROUTE	KILOMETER POST TOTAL PROJECT	SHEET NO.	TOTAL SHEETS
05	Mon	101	R146.8/159.7	1099	1402

Caltrans Metric

Randell D. Hiatt
REGISTERED CIVIL ENGINEER

June 6, 2008
PLANS APPROVAL DATE

REGISTERED PROFESSIONAL ENGINEER Randell D. Hiatt No. C50200 Exp. 6-30-09 CIVIL STATE OF CALIFORNIA

The State of California or its officers or agents shall not be responsible for the accuracy or completeness of electronic copies of this plan sheet.

To get to the Caltrans web site, go to: http://www.dot.ca.gov

To accompany plans dated 7-26-10

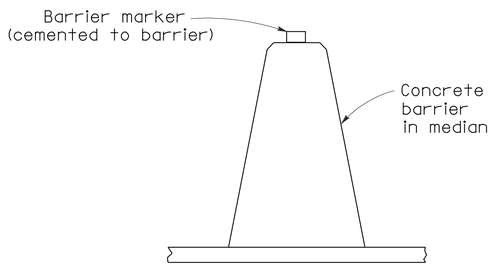

CONCRETE BARRIER TYPE 60 DELINEATION

See Notes 7 and 8

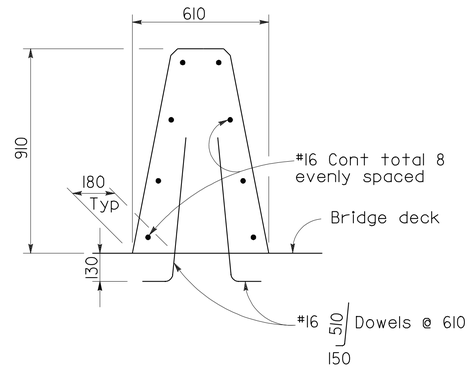

CONCRETE BARRIER TYPE 60A

Details similar to Type 60 except as noted.

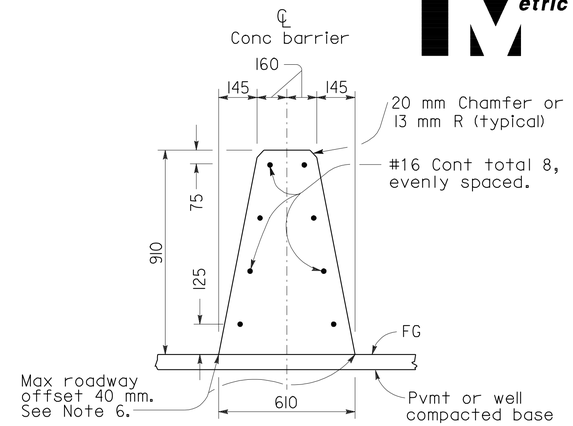

CONCRETE BARRIER TYPE 60

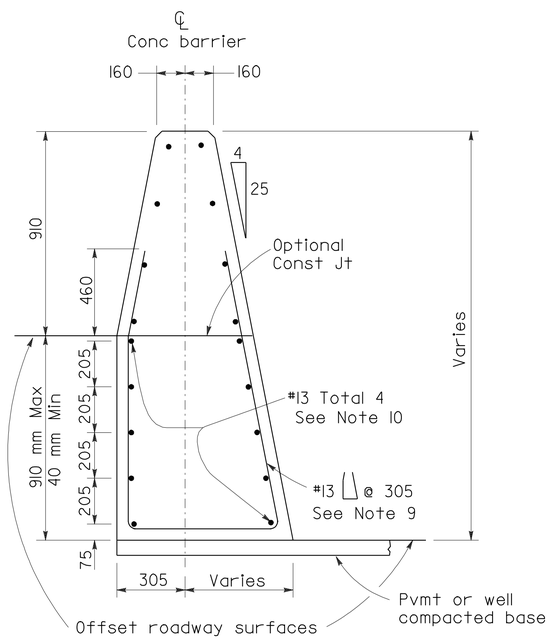

CONCRETE BARRIER TYPE 60C

Details similar to Type 60 except as noted.
Concrete barrier end anchor when necessary.
910 mm roadway surfaces offset shown.

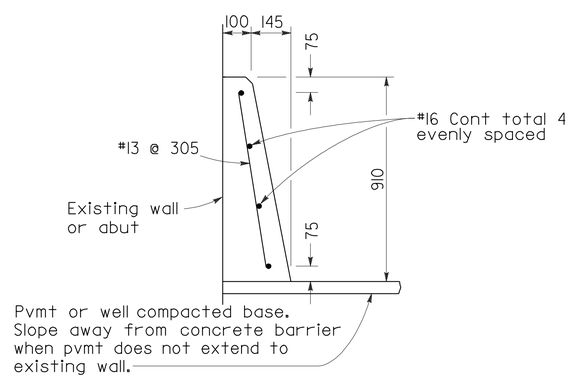

CONCRETE BARRIER TYPE 60D

NOTES

1. See Standard Plan A76B for details of Concrete Barrier Type 60 end anchors, connection to structures and transitions to Concrete Barrier Type 50 and Concrete Barrier Type 60S.
2. See Standard Plan A76C for Concrete Barrier Type 60 transitions at bridge column and sign pedestals.
3. Where glare screen is required on Concrete Barrier Type 60, use Concrete Barrier Type 60G.
4. Where the concrete barrier is added to the face of existing concrete structure, match existing weep holes.
5. Expansion joints in concrete barrier shall be located at all deck, pavement and principal wall joints. Expansion joint filler material shall be the same size as joint or 13 mm minimum.
6. Where roadway offset is greater than 40 mm, see Concrete Barrier Type 60C.
7. Barrier delineation to be used when required by the Special Provisions.
8. Spacing of barrier markers to match spacing of raised pavement markers on the adjacent median edgeline pavement delineation.
9. Reinforcing stirrup not required for roadway offsets less than 305 mm.
10. For roadway surfaces offset greater than 40 mm to 75 mm, no rebars required. For roadway surfaces offset greater than 75 mm to 205 mm, use two #13 rebars at 75 mm above the lower roadway surface. For roadway surfaces offset greater than 205 mm to 305 mm, use two #13 rebars at 75 mm above the lower roadway surface and two #13 rebars at 205 mm above the lower roadway surface. For roadway surfaces offset greater than 305 mm to 910 mm, use two #13 rebars at 75 mm above the lower roadway surface and two #13 rebars at every 205 mm increment vertical spacing above the first two #13 rebars.

STATE OF CALIFORNIA
DEPARTMENT OF TRANSPORTATION

CONCRETE BARRIER TYPE 60

NO SCALE

ALL DIMENSIONS ARE IN
MILLIMETERS UNLESS OTHERWISE SHOWN

RSP A76A DATED JUNE 6, 2008 SUPERSEDES STANDARD PLAN A76A
DATED July 1, 2004 - PAGE 29 OF THE STANDARD PLANS BOOK DATED July 2004.

REVISED STANDARD PLAN RSP A76A

2004 REVISED Std PLAN RSP A76A

5-21-08

DIST	COUNTY	ROUTE	POST MILES TOTAL PROJECT	SHEET NO.	TOTAL SHEETS
05	Mon	101	R146.8/159.7	1100	1402

Caltrans Metric

Randell D. Hiatt
REGISTERED CIVIL ENGINEER

October 20, 2006
PLANS APPROVAL DATE

REGISTERED PROFESSIONAL ENGINEER
Randell D. Hiatt
No. C50200
Exp. 6-30-07
CIVIL
STATE OF CALIFORNIA

The State of California or its officers or agents shall not be responsible for the accuracy or completeness of electronic copies of this plan sheet.

To get to the Caltrans web site, go to: http://www.dot.ca.gov

To accompany plans dated 7-26-10

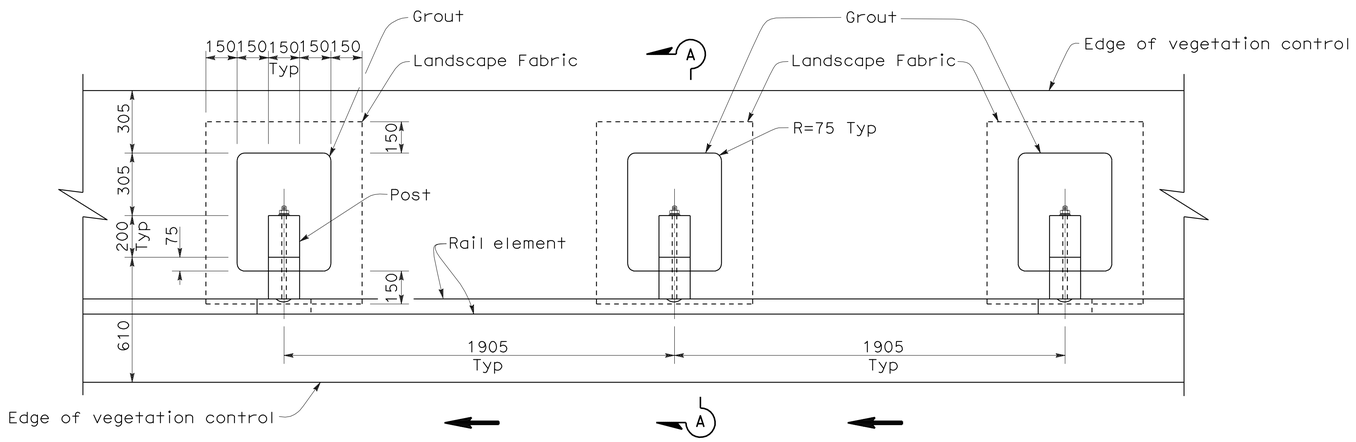

PLAN

NOTES:

1. Where the distance between back of post and hinge point is less than 610 mm, vegetation control to be constructed flush with the back edge of the post.
2. Where dike is constructed under railing, construct vegetation control to back edge of dike. Where paved shoulder is constructed within 610 mm in front of the post, construct vegetation control to the edge of paved shoulder.
3. Direction of adjacent traffic indicated by ← .

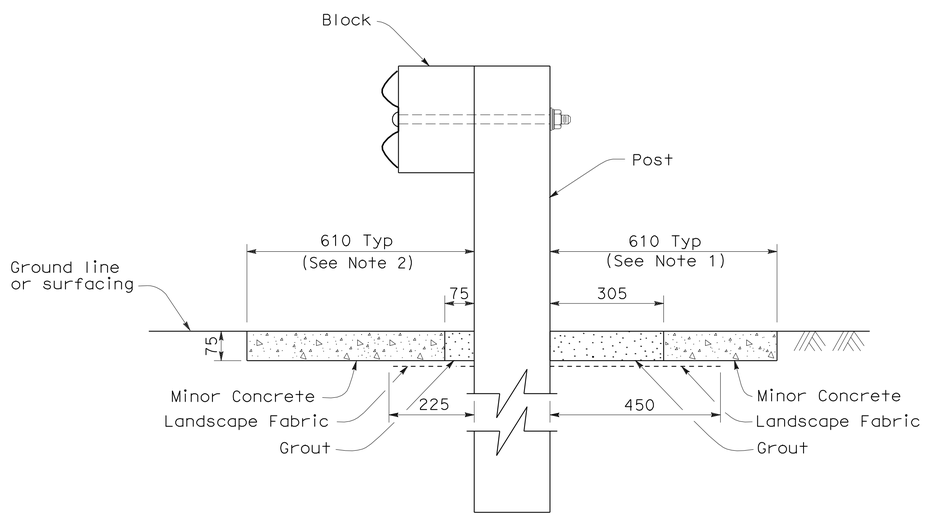

SECTION A-A

STATE OF CALIFORNIA
DEPARTMENT OF TRANSPORTATION

METAL BEAM GUARD RAILING TYPICAL VEGETATION CONTROL STANDARD RAILING SECTION

NO SCALE

ALL DIMENSIONS ARE IN MILLIMETERS UNLESS OTHERWISE SHOWN

NSP A77C5 DATED OCTOBER 20, 2006 SUPPLEMENTS THE STANDARD PLANS BOOK DATED JULY 2004.

NEW STANDARD PLAN NSP A77C5

2004 NEW STANDARD PLAN NSP A77C5

7-24-06