Dist	COUNTY	ROUTE	KILOMETER POST TOTAL PROJECT	SHEET No.	TOTAL SHEETS
05	Mon	101	R146.8/159.7	501	1402

Eric Olson 5-16-10
REGISTERED CIVIL ENGINEER DATE

7-26-10
PLANS APPROVAL DATE

REGISTERED PROFESSIONAL ENGINEER ERIC H. OLSON No. 60801 Exp. 12/31/10 CIVIL STATE OF CALIFORNIA

THE STATE OF CALIFORNIA OR ITS OFFICERS OR AGENTS SHALL NOT BE RESPONSIBLE FOR THE ACCURACY OR COMPLETENESS OF ELECTRONIC COPIES OF THIS PLAN SHEET.

Caltrans Metric

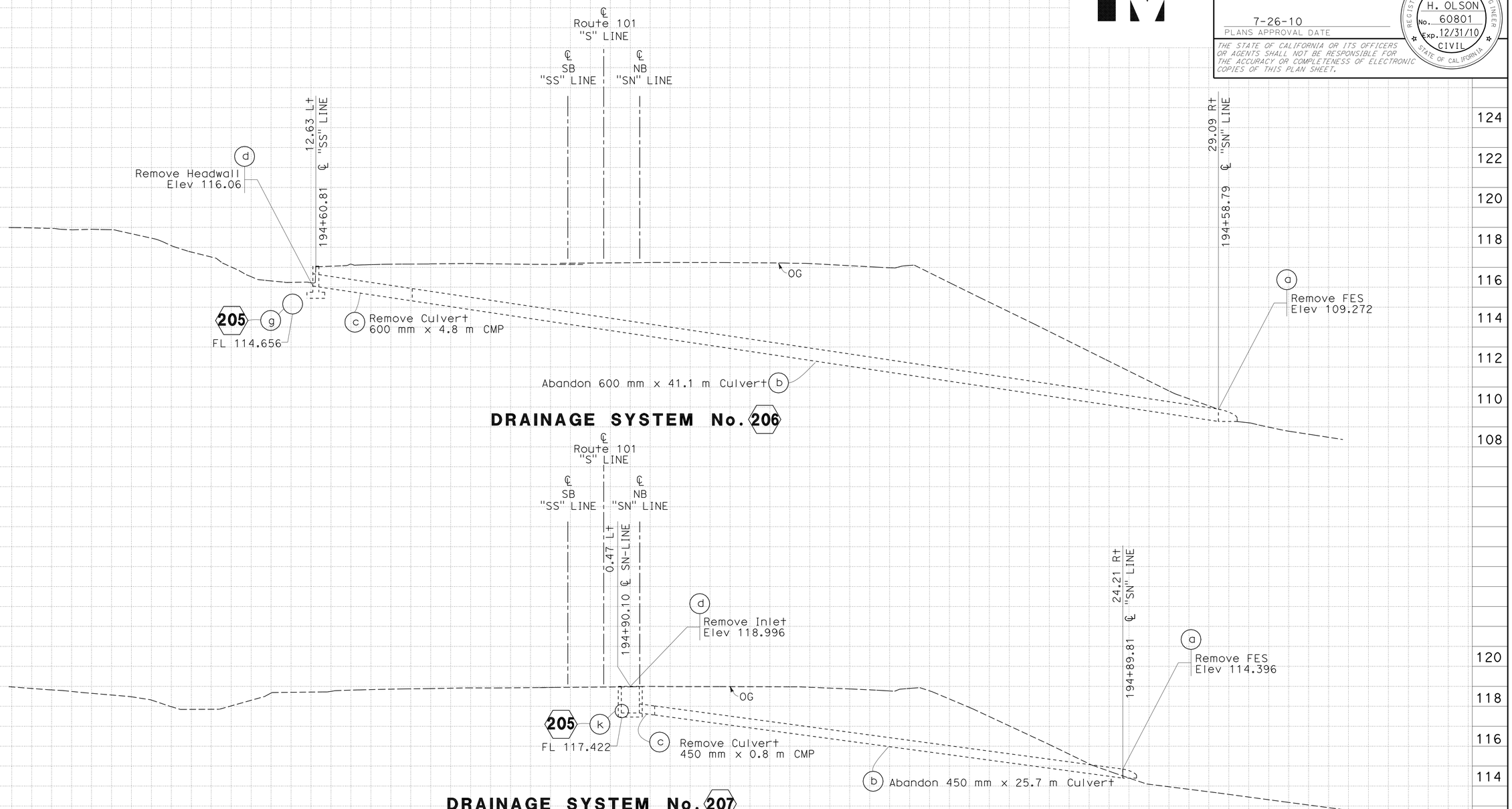

ALL DIMENSIONS ARE IN METERS UNLESS OTHERWISE SHOWN.

DRAINAGE PROFILE DP-147

SCALE: Horiz 1:100
Vert 1:100

Station	
m^3 Exc	
m^3 Emb	

REVISED BY | DATE REVISED

KRIS LAKS | ERIC OLSON

CALCULATED-DESIGNED BY | CHECKED BY

FUNCTIONAL SUPERVISOR **DAVID FRANKE**

STATE OF CALIFORNIA - DEPARTMENT OF TRANSPORTATION

Caltrans **06-DESIGN**

LAST REVISION 05-10-10 | DATE PLOTTED => 02-AUG-2010 | TIME PLOTTED => 17:41

Dist	COUNTY	ROUTE	KILOMETER POST TOTAL PROJECT	SHEET No.	TOTAL SHEETS
05	Mon	101	R146.8/159.7	502	1402

Eric Olson 5-16-10
REGISTERED CIVIL ENGINEER DATE

7-26-10
PLANS APPROVAL DATE

REGISTERED PROFESSIONAL ENGINEER ERIC H. OLSON No. 60801 Exp. 12/31/10 CIVIL STATE OF CALIFORNIA

THE STATE OF CALIFORNIA OR ITS OFFICERS OR AGENTS SHALL NOT BE RESPONSIBLE FOR THE ACCURACY OR COMPLETENESS OF ELECTRONIC COPIES OF THIS PLAN SHEET.

Caltrans Metric

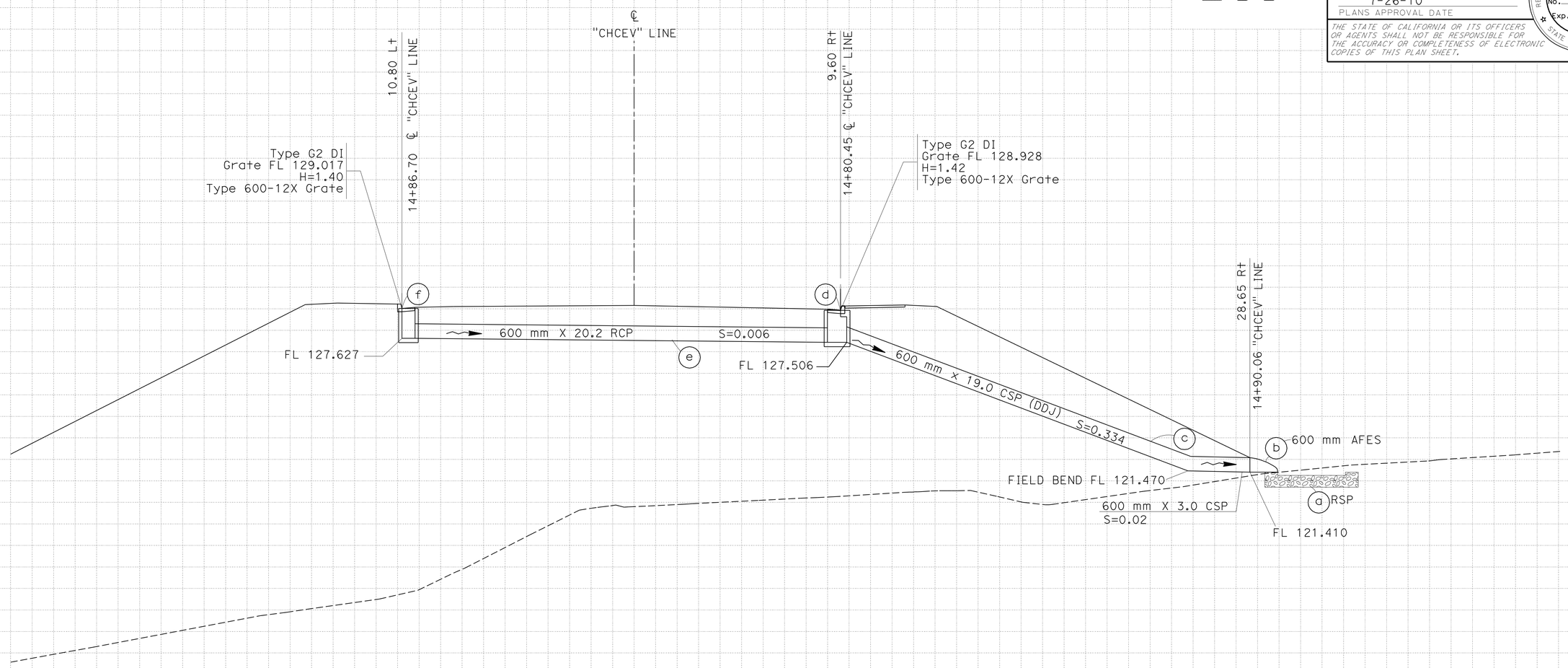

DRAINAGE SYSTEM No. 208

ALL DIMENSIONS ARE IN METERS UNLESS OTHERWISE SHOWED.

DRAINAGE PROFILE
DP-148

SCALE: Horiz 1:100
Vert 1:100

Station	
m^3 Exc	
m^3 Emb	

STATE OF CALIFORNIA - DEPARTMENT OF TRANSPORTATION
Caltrans 06-DESIGN

FUNCTIONAL SUPERVISOR: DAVID FRANKE
CALCULATED-DESIGNED BY: HASHEM GHAZI
CHECKED BY: ERIC OLSON
REVISED BY / DATE REVISED

LAST REVISION 05-10-10
DATE PLOTTED => 02-AUG-2010
TIME PLOTTED => 17:42

Dist	COUNTY	ROUTE	KILOMETER POST TOTAL PROJECT	SHEET No.	TOTAL SHEETS
05	Mon	101	R146.8/159.7	503	1402

Eric Olson 5-16-10
REGISTERED CIVIL ENGINEER DATE

7-26-10
PLANS APPROVAL DATE

REGISTERED PROFESSIONAL ENGINEER ERIC H. OLSON No. 60801 Exp. 12/31/10 CIVIL STATE OF CALIFORNIA

THE STATE OF CALIFORNIA OR ITS OFFICERS OR AGENTS SHALL NOT BE RESPONSIBLE FOR THE ACCURACY OR COMPLETENESS OF ELECTRONIC COPIES OF THIS PLAN SHEET.

Caltrans Metric

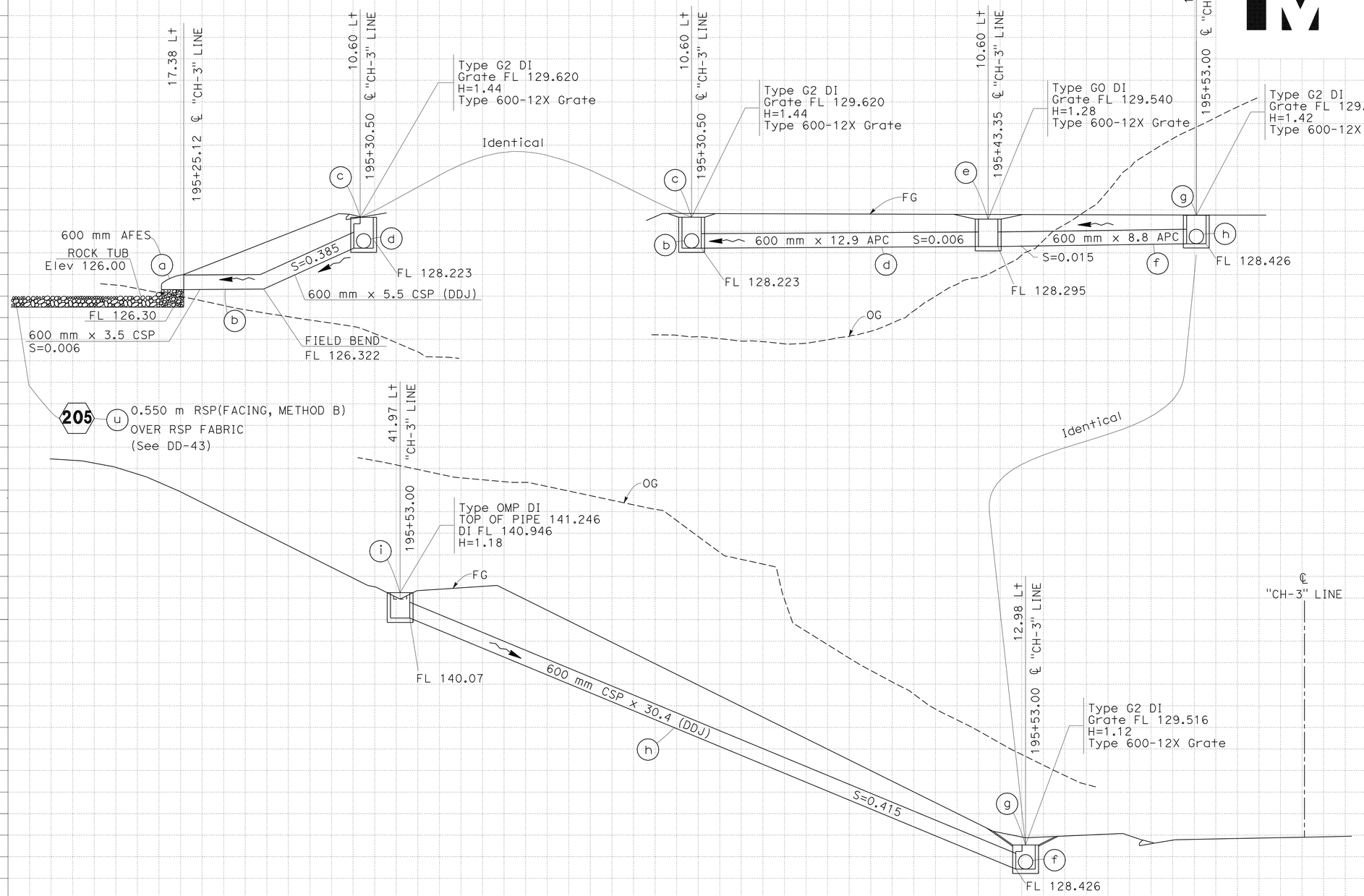

DRAINAGE SYSTEM No. 209

ALL DIMENSIONS ARE IN METERS
UNLESS OTHERWISE SHOWN.

DRAINAGE PROFILE
DP-149

SCALE: Horiz 1:100
Vert 1:100

Station	
m^3	Exc
	Emb

REVISED BY | DATE REVISED

KRIS LAKS | ERIC OLSON

CALCULATED-DESIGNED BY | CHECKED BY

FUNCTIONAL SUPERVISOR: DAVID FRANKE

STATE OF CALIFORNIA - DEPARTMENT OF TRANSPORTATION
Caltrans 06-DESIGN

LAST REVISION 05-10-10 | DATE PLOTTED => 02-AUG-2010 | TIME PLOTTED => 17:42

Dist	COUNTY	ROUTE	KILOMETER POST TOTAL PROJECT	SHEET No.	TOTAL SHEETS
05	Mon	101	R146.8/159.7	504	1402

Eric Olson 5-16-10
REGISTERED CIVIL ENGINEER DATE

7-26-10
PLANS APPROVAL DATE

REGISTERED PROFESSIONAL ENGINEER ERIC H. OLSON No. 60801 Exp. 12/31/10 CIVIL STATE OF CALIFORNIA

THE STATE OF CALIFORNIA OR ITS OFFICERS OR AGENTS SHALL NOT BE RESPONSIBLE FOR THE ACCURACY OR COMPLETENESS OF ELECTRONIC COPIES OF THIS PLAN SHEET.

Caltrans Metric

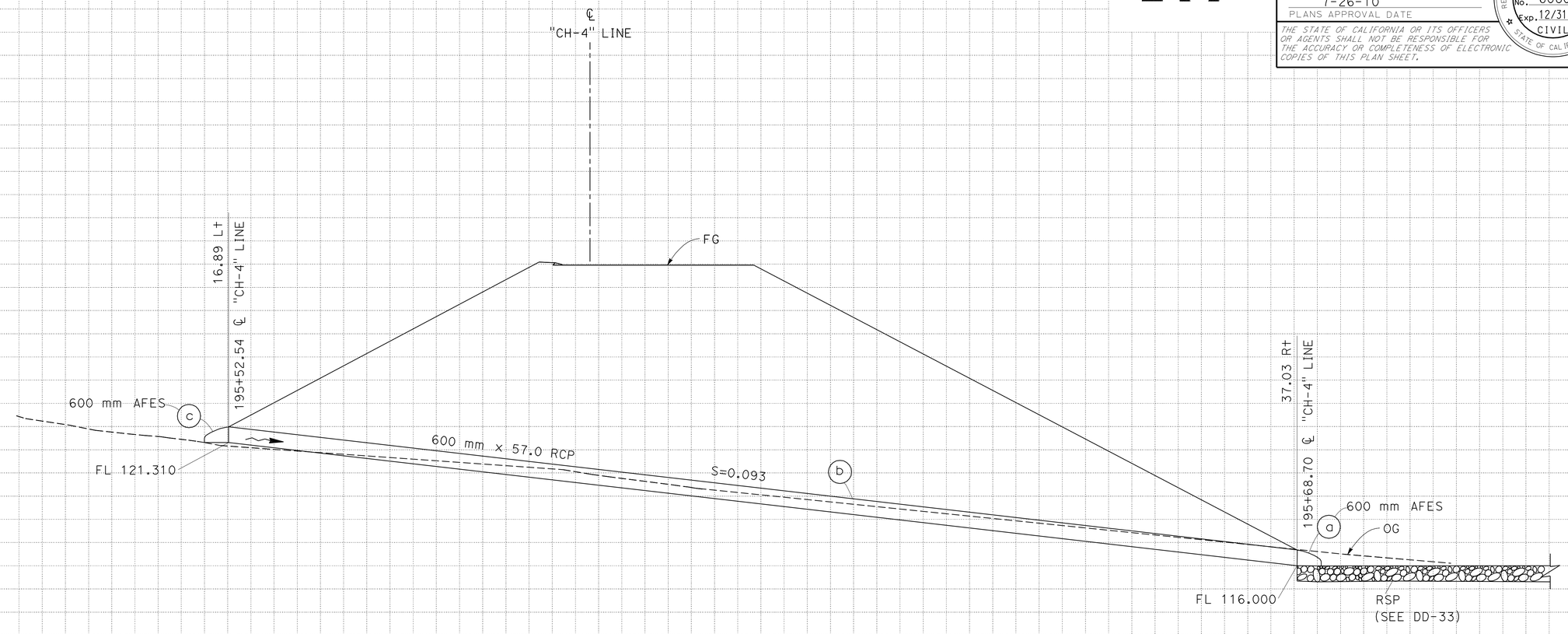

DRAINAGE SYSTEM No. 210

ALL DIMENSIONS ARE IN METERS UNLESS OTHERWISE SHOWN.

DRAINAGE PROFILE DP-150

SCALE: Horiz 1:100
Vert 1:100

Station	
m^3 Exc	
m^3 Emb	

STATE OF CALIFORNIA - DEPARTMENT OF TRANSPORTATION
Caltrans 06-DESIGN

FUNCTIONAL SUPERVISOR DAVID FRANKE
CALCULATED-DESIGNED BY KRIS LAKS
CHECKED BY ERIC OLSON
REVISED BY
DATE REVISED

LAST REVISION DATE PLOTTED => 02-AUG-2010
05-10-10 TIME PLOTTED => 17:42

Dist	COUNTY	ROUTE	KILOMETER POST TOTAL PROJECT	SHEET No.	TOTAL SHEETS
05	Mon	101	R146.8/159.7	505	1402

Eric Olson 5-16-10
REGISTERED CIVIL ENGINEER DATE

7-26-10
PLANS APPROVAL DATE

REGISTERED PROFESSIONAL ENGINEER ERIC H. OLSON No. 60801 Exp. 12/31/10 CIVIL STATE OF CALIFORNIA

THE STATE OF CALIFORNIA OR ITS OFFICERS OR AGENTS SHALL NOT BE RESPONSIBLE FOR THE ACCURACY OR COMPLETENESS OF ELECTRONIC COPIES OF THIS PLAN SHEET.

Caltrans Metric

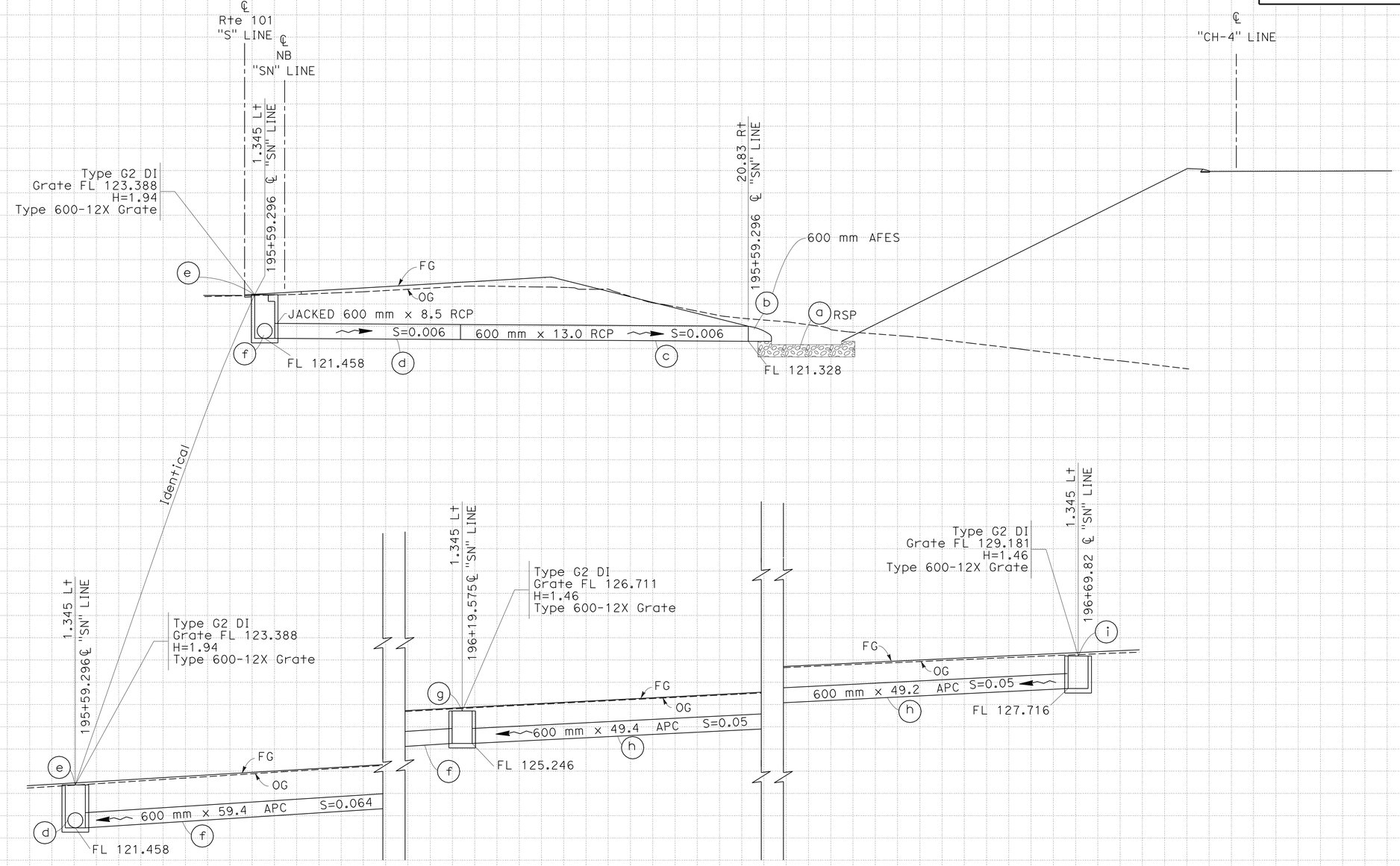

DRAINAGE SYSTEM No. 211

ALL DIMENSIONS ARE IN METERS UNLESS OTHERWISE SHOWN.

DRAINAGE PROFILE DP-151

SCALE: Horiz 1:100
Vert 1:100

STATE OF CALIFORNIA - DEPARTMENT OF TRANSPORTATION
Caltrans
06-DESIGN

FUNCTIONAL SUPERVISOR: DAVID FRANKE

CALCULATED-DESIGNED BY: KRIS LAKS
CHECKED BY: ERIC OLSON

REVISED BY | DATE REVISED

Station
m³ Exc
Emb

LAST REVISION DATE PLOTTED => 02-AUG-2010
05-10-10 TIME PLOTTED => 17:42

Dist	COUNTY	ROUTE	KILOMETER POST TOTAL PROJECT	SHEET No.	TOTAL SHEETS
05	Mon	101	R146.8/159.7	506	1402

Eric Olson 5-16-10
REGISTERED CIVIL ENGINEER DATE

7-26-10
PLANS APPROVAL DATE

REGISTERED PROFESSIONAL ENGINEER ERIC H. OLSON No. 60801 Exp. 12/31/10 CIVIL STATE OF CALIFORNIA

THE STATE OF CALIFORNIA OR ITS OFFICERS OR AGENTS SHALL NOT BE RESPONSIBLE FOR THE ACCURACY OR COMPLETENESS OF ELECTRONIC COPIES OF THIS PLAN SHEET.

Caltrans Metric

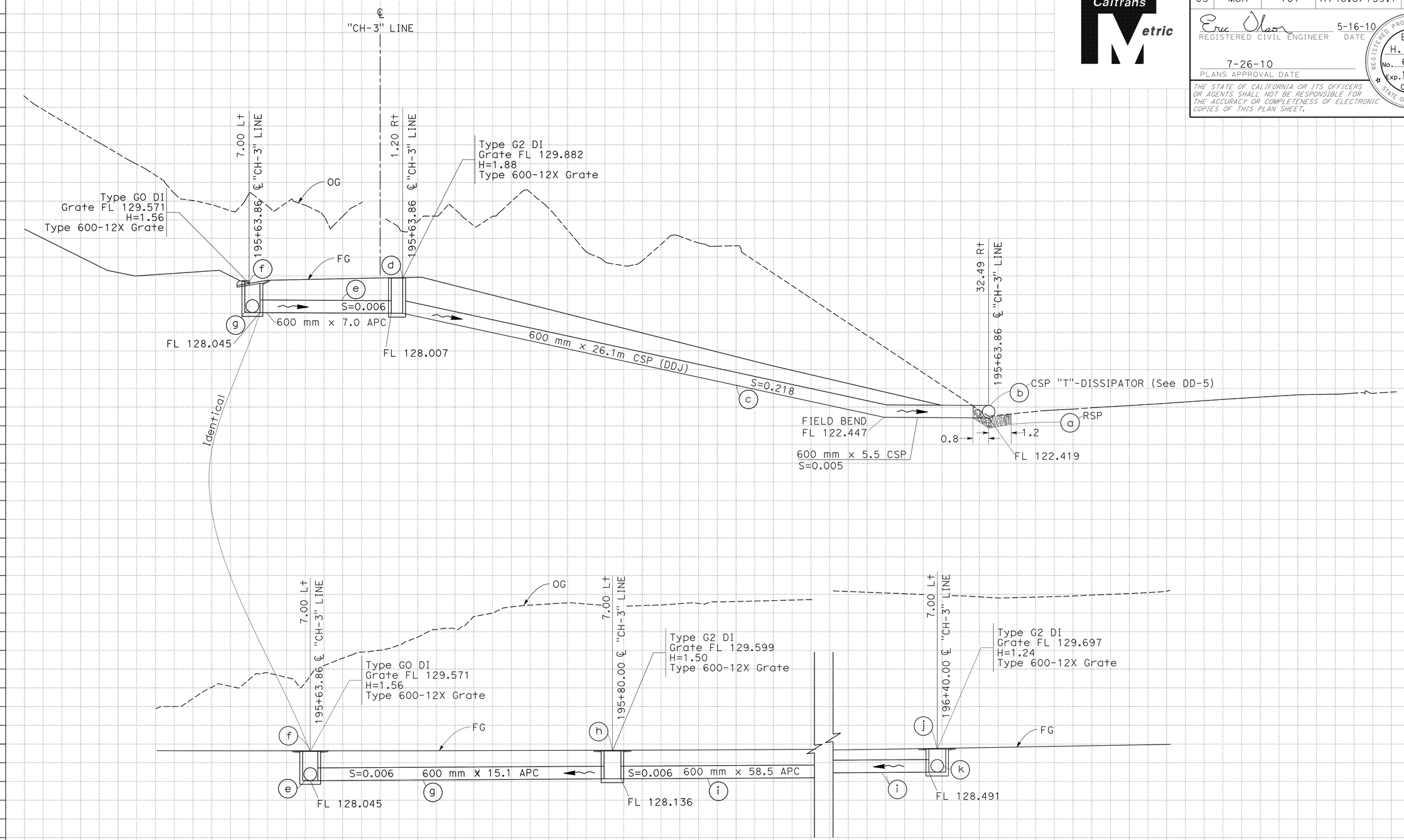

DRAINAGE SYSTEM No. 212

DRAINAGE PROFILES DP-152

ALL DIMENSIONS ARE IN METERS UNLESS OTHERWISE SHOWN.

SCALE: Horiz 1:100
Vert 1:100

Station	
m^3 Exc	
m^3 Emb	

STATE OF CALIFORNIA - DEPARTMENT OF TRANSPORTATION
Caltrans
06-DESIGN

FUNCTIONAL SUPERVISOR: DAVID FRANKE
CALCULATED-DESIGNED BY: HASHEM GHAZI
CHECKED BY: ERIC OLSON
REVISED BY | DATE REVISED

LAST REVISION 05-10-10
DATE PLOTTED => 02-AUG-2010
TIME PLOTTED => 17:42

Dist	COUNTY	ROUTE	KILOMETER POST TOTAL PROJECT	SHEET No.	TOTAL SHEETS
05	Mon	101	R146.8/159.7	507	1402

Eric Olson 5-16-10
REGISTERED CIVIL ENGINEER DATE

7-26-10
PLANS APPROVAL DATE

REGISTERED PROFESSIONAL ENGINEER ERIC H. OLSON No. 60801 Exp. 12/31/10 CIVIL STATE OF CALIFORNIA

THE STATE OF CALIFORNIA OR ITS OFFICERS OR AGENTS SHALL NOT BE RESPONSIBLE FOR THE ACCURACY OR COMPLETENESS OF ELECTRONIC COPIES OF THIS PLAN SHEET.

Caltrans Metric

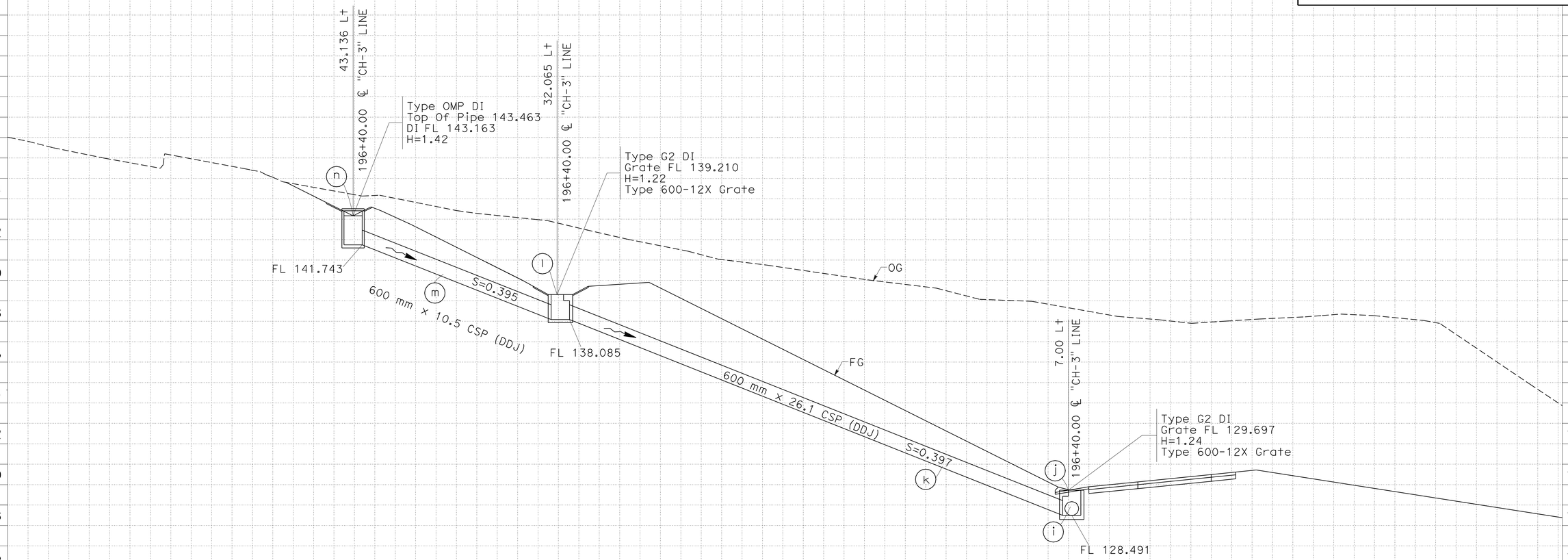

DRAINAGE SYSTEM No. 212 Continued

ALL DIMENSIONS ARE IN METERS UNLESS OTHERWISE SHOWN.

DRAINAGE PROFILE DP-153

SCALE: Horiz 1:100
Vert 1:100

Station	
m^3 Exc	
m^3 Emb	

STATE OF CALIFORNIA - DEPARTMENT OF TRANSPORTATION
Caltrans 06-DESIGN

FUNCTIONAL SUPERVISOR: DAVID FRANKE
CALCULATED-DESIGNED BY: HASHEM GHAZI
CHECKED BY: ERIC OLSON
REVISED BY / DATE REVISED

LAST REVISION 05-10-10
DATE PLOTTED => 02-AUG-2010
TIME PLOTTED => 17:42

Dist	COUNTY	ROUTE	KILOMETER POST TOTAL PROJECT	SHEET No.	TOTAL SHEETS
05	Mon	101	R146.8/159.7	508	1402

Eric Olson 5-16-10
REGISTERED CIVIL ENGINEER DATE

7-26-10
PLANS APPROVAL DATE

REGISTERED PROFESSIONAL ENGINEER ERIC H. OLSON No. 60801 Exp. 12/31/10 CIVIL STATE OF CALIFORNIA

THE STATE OF CALIFORNIA OR ITS OFFICERS OR AGENTS SHALL NOT BE RESPONSIBLE FOR THE ACCURACY OR COMPLETENESS OF ELECTRONIC COPIES OF THIS PLAN SHEET.

Caltrans Metric

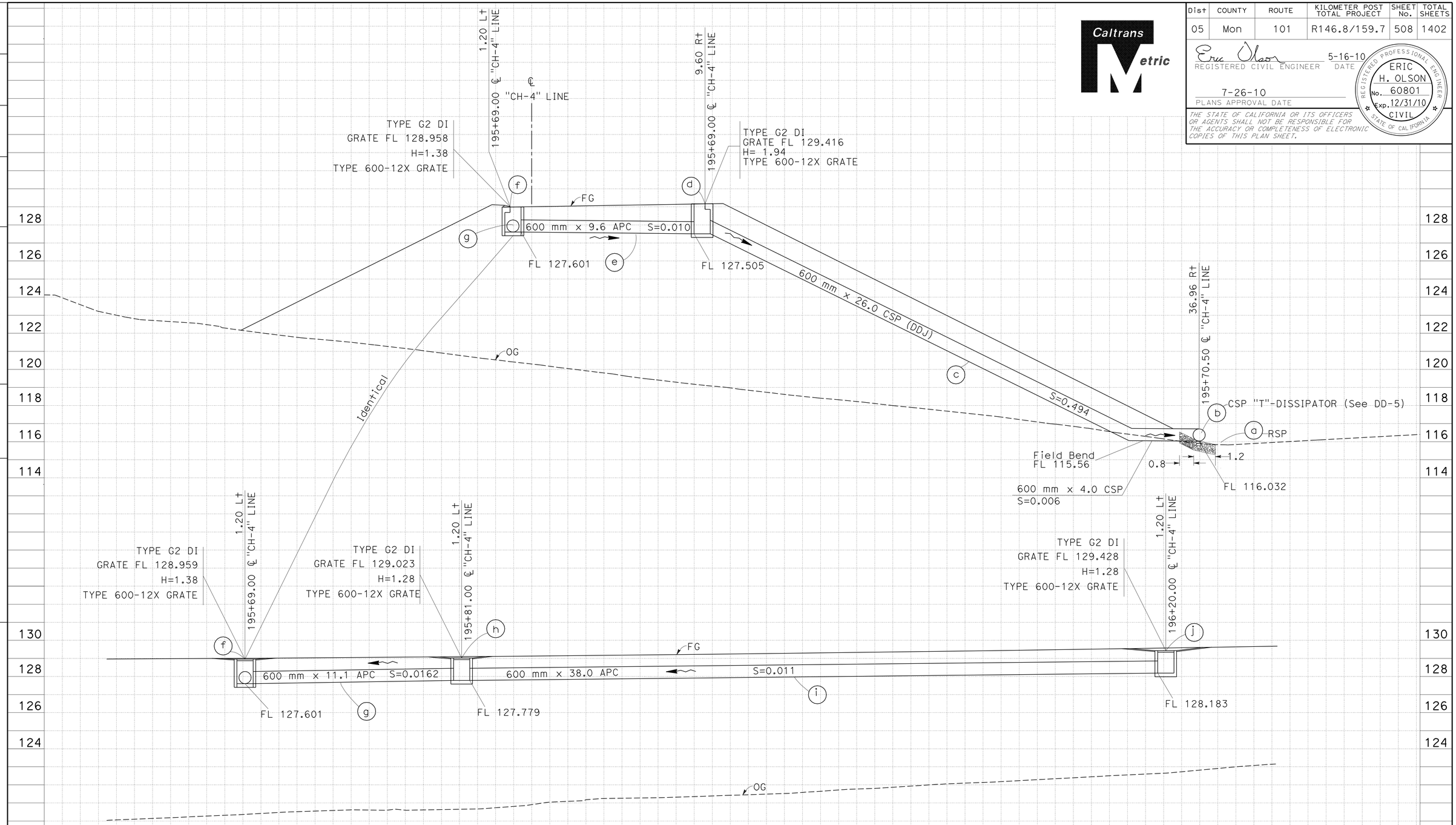

DRAINAGE SYSTEM No. 213

DRAINAGE PROFILE DP-154

ALL DIMENSIONS ARE IN METERS UNLESS OTHERWISE SHOWN.

SCALE: Horiz 1:100
Vert 1:100

Station	
m^3	Exc
	Emb

REVISED BY | DATE REVISED

HASHEM GHAZI | ERIC OLSON

CALCULATED-DESIGNED BY | CHECKED BY

FUNCTIONAL SUPERVISOR DAVID FRANKE

STATE OF CALIFORNIA - DEPARTMENT OF TRANSPORTATION
Caltrans 06-DESIGN

LAST REVISION 05-10-10 DATE PLOTTED => 02-AUG-2010 TIME PLOTTED => 17:42

Dist	COUNTY	ROUTE	KILOMETER POST TOTAL PROJECT	SHEET No.	TOTAL SHEETS
05	Mon	101	R146.8/159.7	509	1402

Caltrans Metric

Eric Olson 5-16-10
REGISTERED CIVIL ENGINEER DATE

7-26-10
PLANS APPROVAL DATE

REGISTERED PROFESSIONAL ENGINEER ERIC H. OLSON No. 60801 Exp. 12/31/10 CIVIL STATE OF CALIFORNIA

THE STATE OF CALIFORNIA OR ITS OFFICERS OR AGENTS SHALL NOT BE RESPONSIBLE FOR THE ACCURACY OR COMPLETENESS OF ELECTRONIC COPIES OF THIS PLAN SHEET.

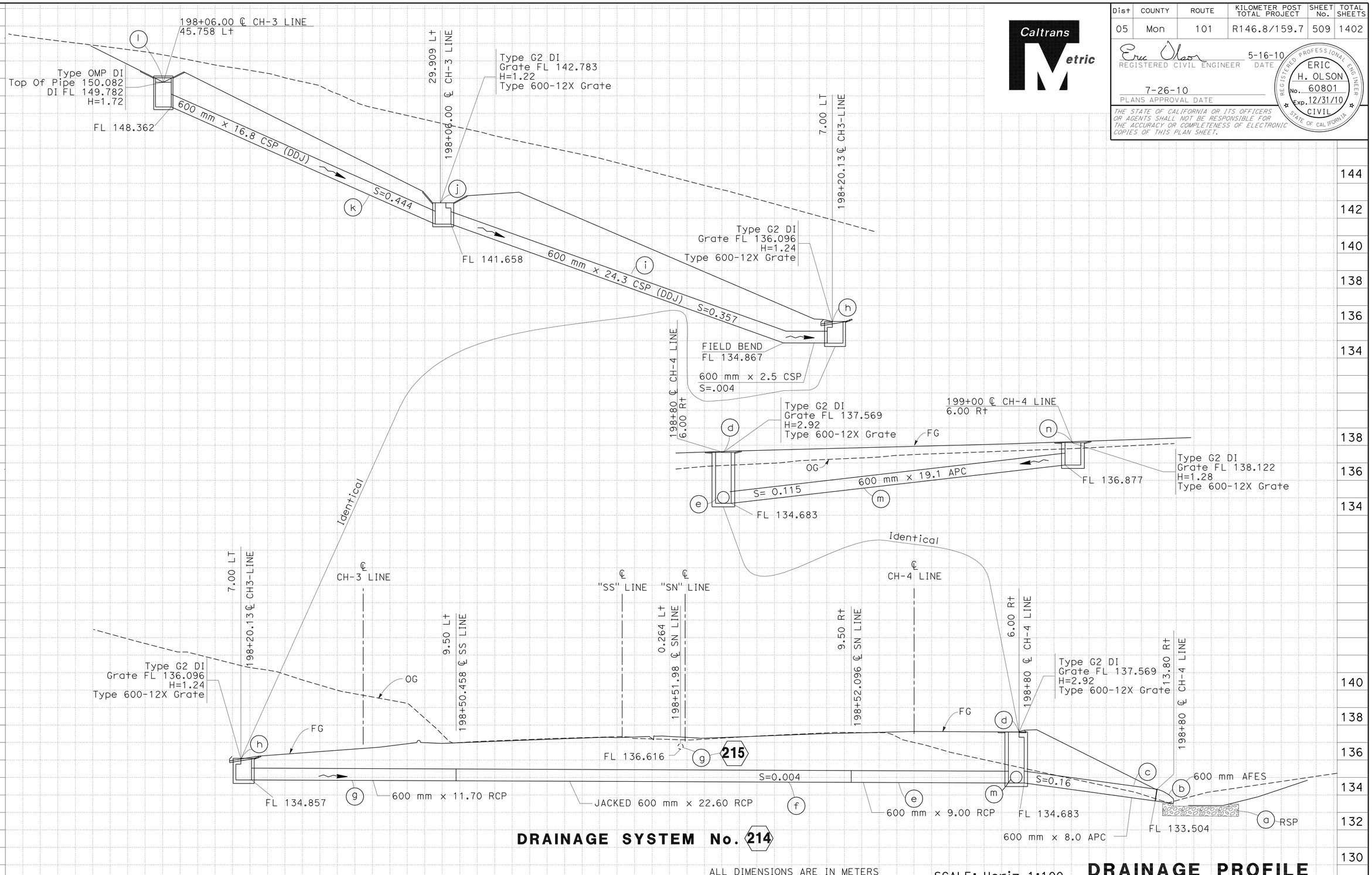

DRAINAGE SYSTEM No. 214

ALL DIMENSIONS ARE IN METERS UNLESS OTHERWISE SHOWN.

SCALE: Horiz 1:100
Vert 1:100

DRAINAGE PROFILE DP-155

Station	
m^3 Exc	
m^3 Emb	

REVISED BY / DATE REVISED

KRIS LAKS / ERIC OLSON

CALCULATED-DESIGNED BY / CHECKED BY

FUNCTIONAL SUPERVISOR: DAVID FRANKE

STATE OF CALIFORNIA - DEPARTMENT OF TRANSPORTATION
Caltrans 06-DESIGN

LAST REVISION 05-10-10 DATE PLOTTED => 02-AUG-2010 TIME PLOTTED => 17:42

Dist	COUNTY	ROUTE	KILOMETER POST TOTAL PROJECT	SHEET No.	TOTAL SHEETS
05	Mon	101	R146.8/159.7	510	1402

Eric Olson 5-16-10
REGISTERED CIVIL ENGINEER DATE

7-26-10
PLANS APPROVAL DATE

REGISTERED PROFESSIONAL ENGINEER ERIC H. OLSON No. 60801 Exp. 12/31/10 CIVIL STATE OF CALIFORNIA

THE STATE OF CALIFORNIA OR ITS OFFICERS OR AGENTS SHALL NOT BE RESPONSIBLE FOR THE ACCURACY OR COMPLETENESS OF ELECTRONIC COPIES OF THIS PLAN SHEET.

Caltrans Metric

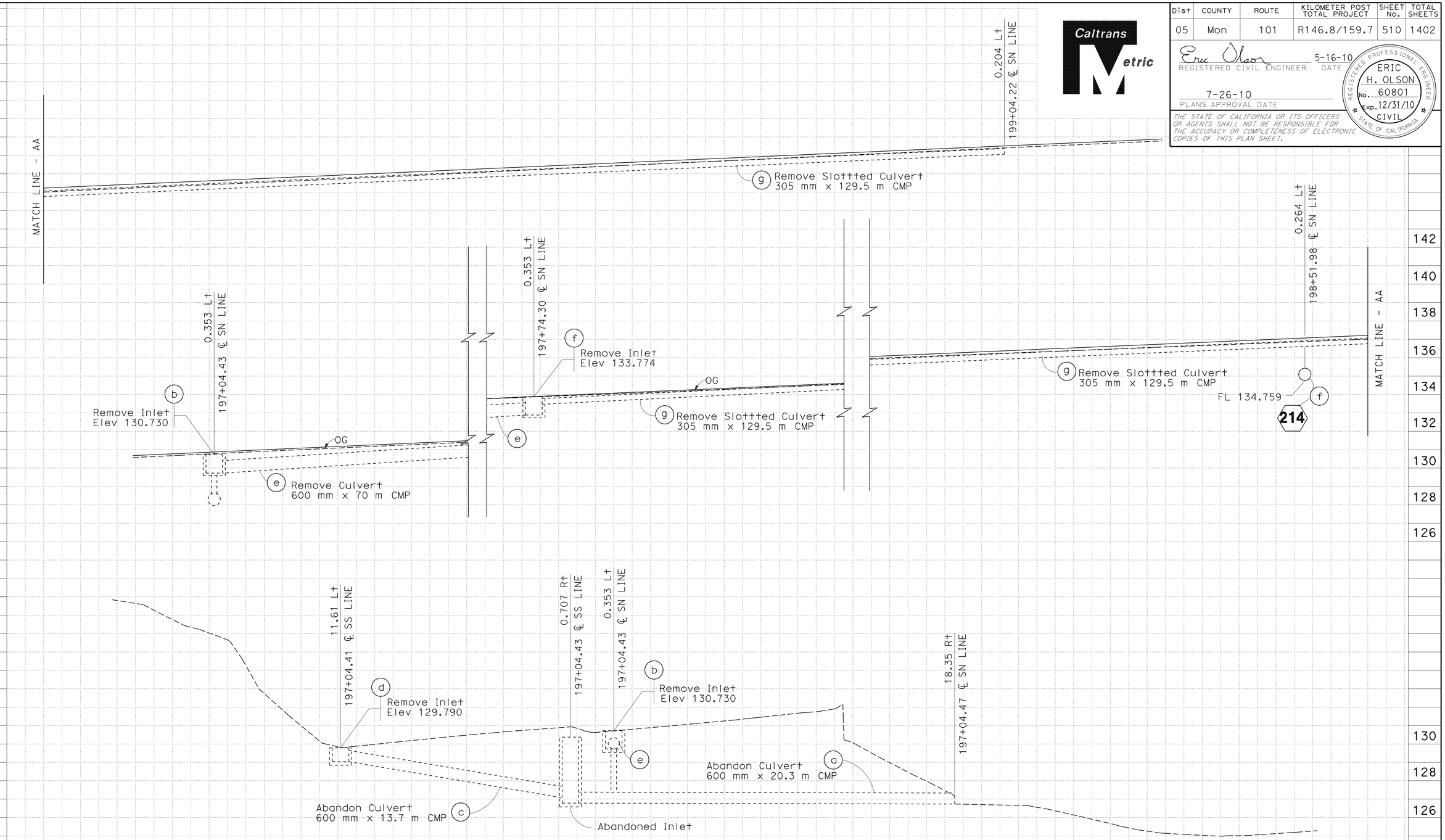

DRAINAGE SYSTEM No. 215

ALL DIMENSIONS ARE IN METERS UNLESS OTHERWISE SHOWN.

DRAINAGE PROFILE DP-156

SCALE: Horiz 1:100
Vert 1:100

Station	
m^3 Exc	
m^3 Emb	

REVISED BY | DATE REVISED

CARLOS BLANCAS
ERIC OLSON

CALCULATED-DESIGNED BY
CHECKED BY

FUNCTIONAL SUPERVISOR
DAVID FRANKE

STATE OF CALIFORNIA - DEPARTMENT OF TRANSPORTATION
Caltrans
06-DESIGN

LAST REVISION 05-10-10
DATE PLOTTED => 02-AUG-2010
TIME PLOTTED => 17:42

Dist	COUNTY	ROUTE	KILOMETER POST TOTAL PROJECT	SHEET No.	TOTAL SHEETS
05	Mon	101	R146.8/159.7	511	1402

Eric Olson 5-16-10
REGISTERED CIVIL ENGINEER DATE

7-26-10
PLANS APPROVAL DATE

REGISTERED PROFESSIONAL ENGINEER ERIC H. OLSON No. 60801 Exp. 12/31/10 CIVIL STATE OF CALIFORNIA

THE STATE OF CALIFORNIA OR ITS OFFICERS OR AGENTS SHALL NOT BE RESPONSIBLE FOR THE ACCURACY OR COMPLETENESS OF ELECTRONIC COPIES OF THIS PLAN SHEET.

Caltrans Metric

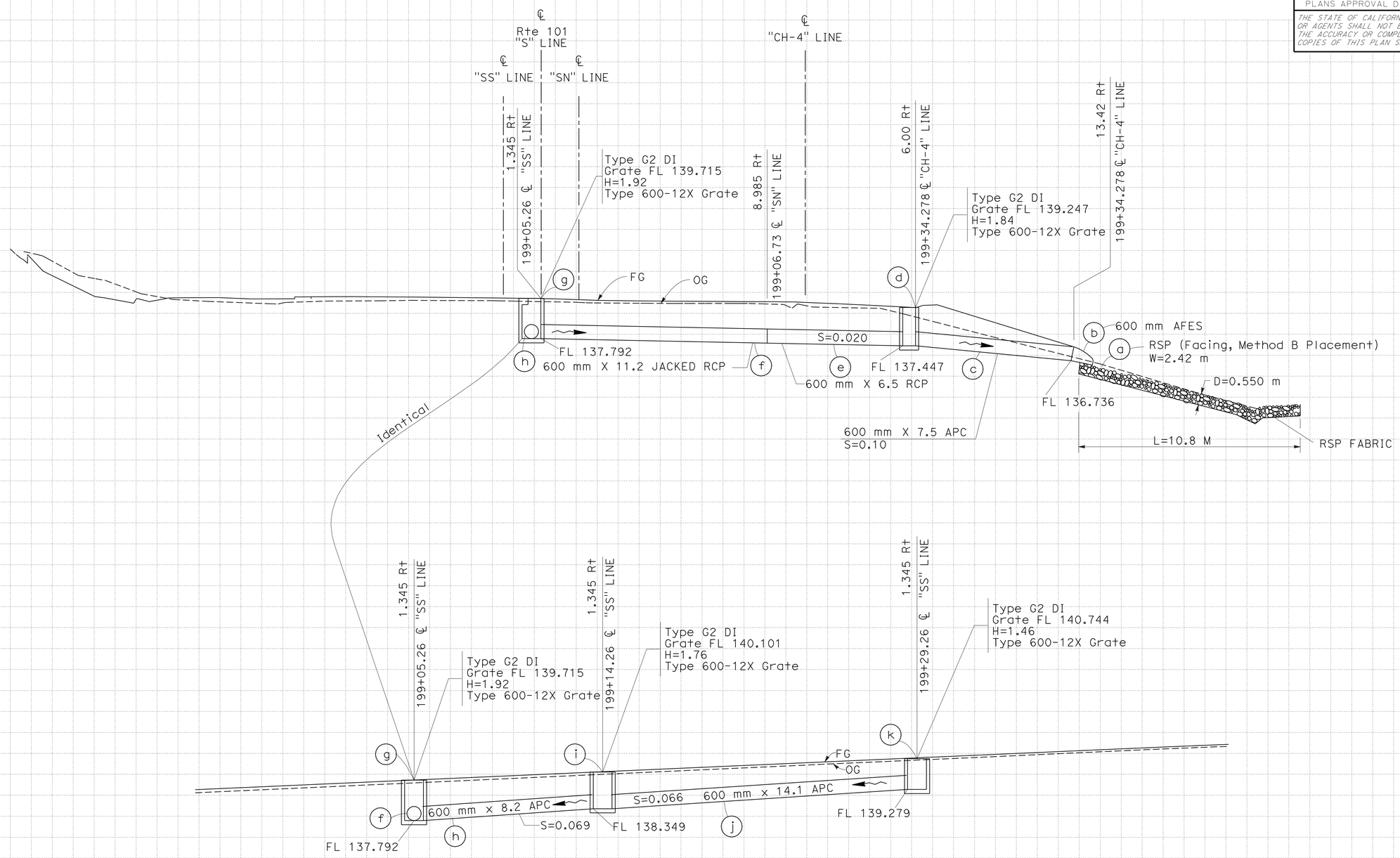

DRAINAGE SYSTEM No. 216

ALL DIMENSIONS ARE IN METERS UNLESS OTHERWISE SHOWN.

DRAINAGE PROFILE DP-157

SCALE: Horiz 1:100
Vert 1:100

Station	
m^3 Exc	
m^3 Emb	

STATE OF CALIFORNIA - DEPARTMENT OF TRANSPORTATION
Caltrans 06-DESIGN

FUNCTIONAL SUPERVISOR DAVID FRANKE
CALCULATED-DESIGNED BY KRIS LAKS
CHECKED BY ERIC OLSON
REVISED BY
DATE REVISED

LAST REVISION 05-10-10
DATE PLOTTED => 02-AUG-2010
TIME PLOTTED => 17:42

Dist	COUNTY	ROUTE	KILOMETER POST TOTAL PROJECT	SHEET No.	TOTAL SHEETS
05	Mon	101	R146.8/159.7	512	1402

Caltrans Metric

Eric Olson 5-16-10
REGISTERED CIVIL ENGINEER DATE

7-26-10
PLANS APPROVAL DATE

REGISTERED PROFESSIONAL ENGINEER ERIC H. OLSON No. 60801 Exp. 12/31/10 CIVIL STATE OF CALIFORNIA

THE STATE OF CALIFORNIA OR ITS OFFICERS OR AGENTS SHALL NOT BE RESPONSIBLE FOR THE ACCURACY OR COMPLETENESS OF ELECTRONIC COPIES OF THIS PLAN SHEET.

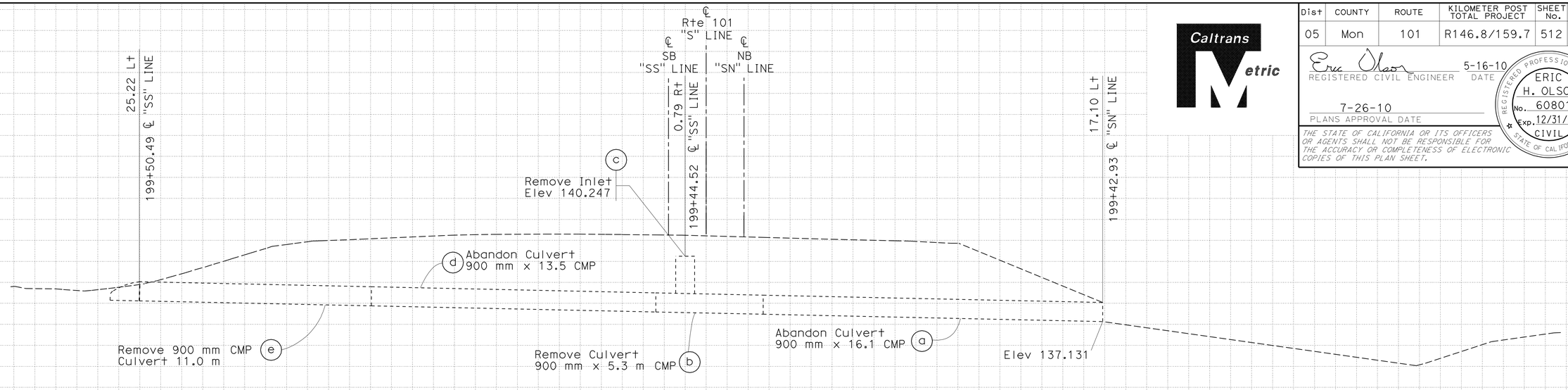

DRAINAGE SYSTEM No. 217

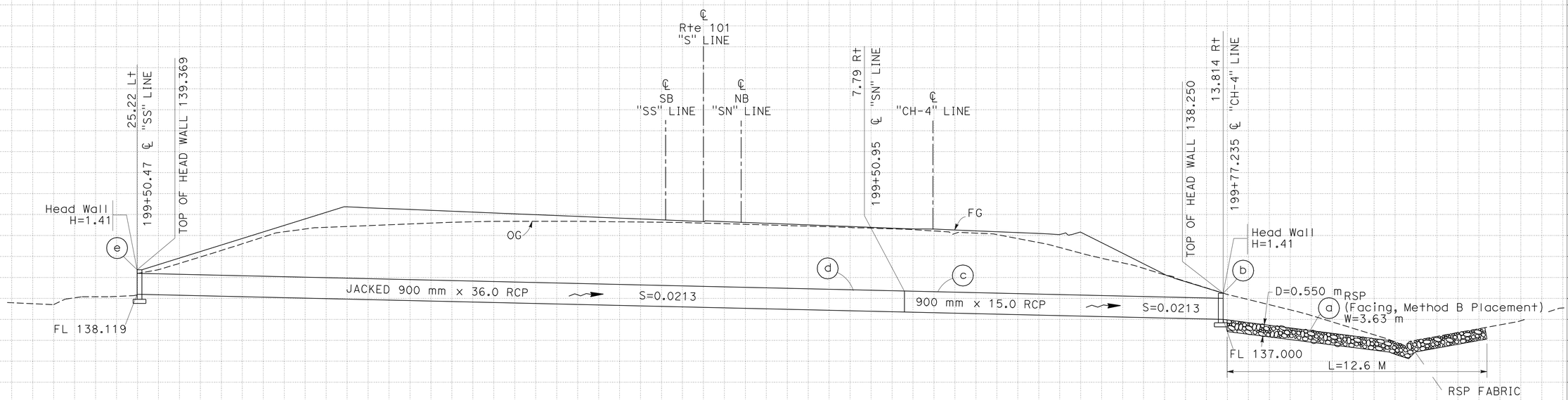

DRAINAGE SYSTEM No. 218

DRAINAGE PROFILE
DP-158

ALL DIMENSIONS ARE IN METERS
UNLESS OTHERWISE SHOWN.

SCALE: Horiz 1:100
Vert 1:100

STATE OF CALIFORNIA - DEPARTMENT OF TRANSPORTATION
Caltrans
06-DESIGN

FUNCTIONAL SUPERVISOR: DAVID FRANKE

CALCULATED-DESIGNED BY: KRIS LAKS
CHECKED BY: ERIC OLSON

REVISED BY | DATE REVISED

Station
m^3 Exc
Emb

LAST REVISION 05-10-10
DATE PLOTTED => 02-AUG-2010
TIME PLOTTED => 17:43

Dist	COUNTY	ROUTE	KILOMETER POST TOTAL PROJECT	SHEET No.	TOTAL SHEETS
05	Mon	101	R146.8/159.7	513	1402

Caltrans Metric

Eric Olson 5-16-10
REGISTERED CIVIL ENGINEER DATE

7-26-10
PLANS APPROVAL DATE

REGISTERED PROFESSIONAL ENGINEER ERIC H. OLSON No. 60801 Exp. 12/31/10 CIVIL STATE OF CALIFORNIA

THE STATE OF CALIFORNIA OR ITS OFFICERS OR AGENTS SHALL NOT BE RESPONSIBLE FOR THE ACCURACY OR COMPLETENESS OF ELECTRONIC COPIES OF THIS PLAN SHEET.

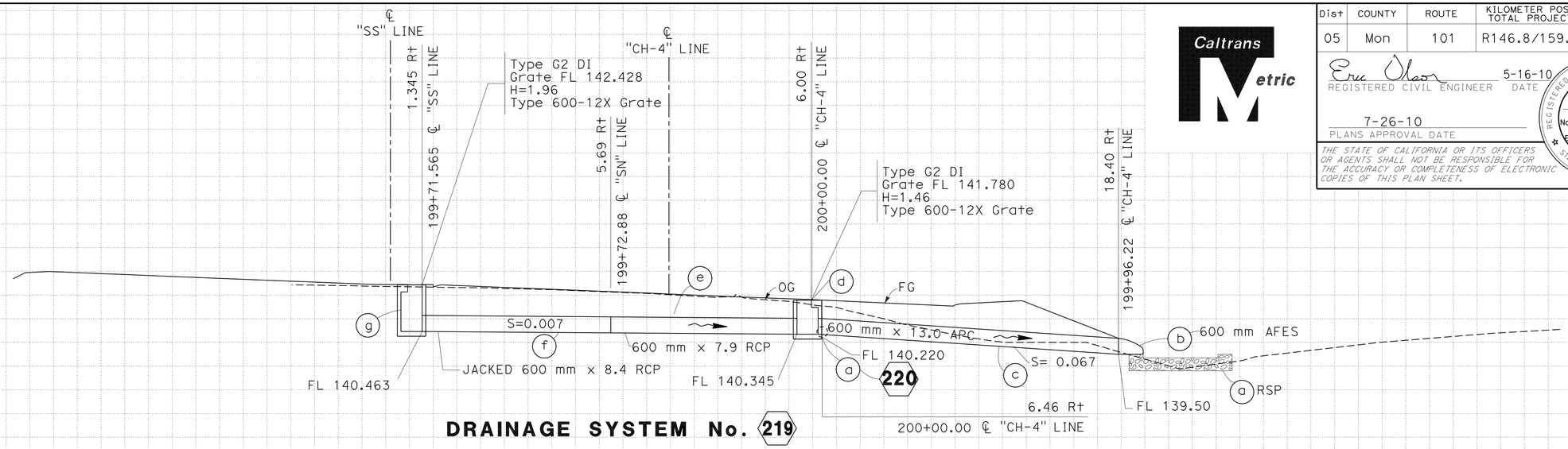

DRAINAGE SYSTEM No. 219

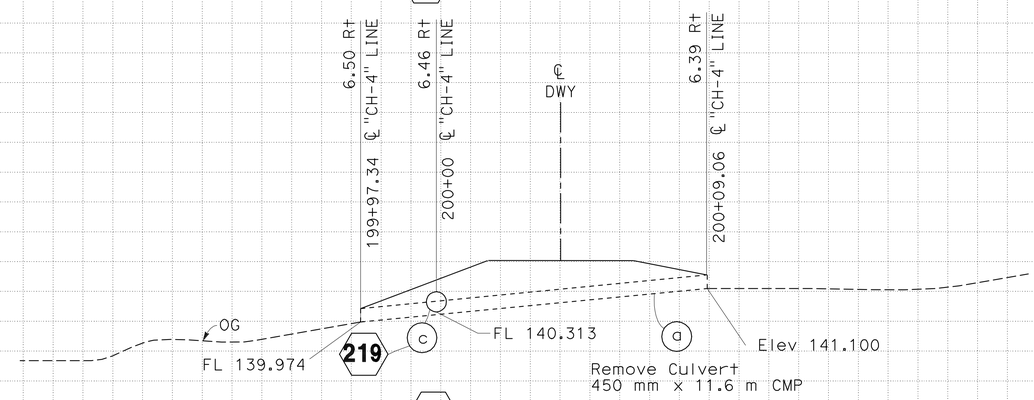

DRAINAGE SYSTEM No. 220

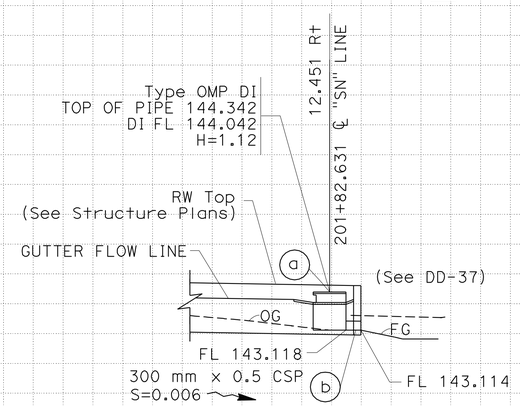

DRAINAGE SYSTEM No. 221

ALL DIMENSIONS ARE IN METERS UNLESS OTHERWISE SHOWN.

DRAINAGE PROFILE
DP-159

SCALE: Horiz 1:100
Vert 1:100

REVISED BY | DATE REVISED

KRIS LAKS | ERIC OLSON

CALCULATED-DESIGNED BY | CHECKED BY

FUNCTIONAL SUPERVISOR: DAVID FRANKE

STATE OF CALIFORNIA - DEPARTMENT OF TRANSPORTATION
Caltrans 06-DESIGN

Station | m³ Exc | Emb

LAST REVISION 05-10-10 | DATE PLOTTED => 02-AUG-2010 | TIME PLOTTED => 17:43

Dist	COUNTY	ROUTE	KILOMETER POST TOTAL PROJECT	SHEET No.	TOTAL SHEETS
05	Mon	101	R146.8/159.7	514	1402

Caltrans Metric

Eric Olson 5-16-10
REGISTERED CIVIL ENGINEER DATE

7-26-10
PLANS APPROVAL DATE

REGISTERED PROFESSIONAL ENGINEER ERIC H. OLSON No. 60801 Exp. 12/31/10 CIVIL STATE OF CALIFORNIA

THE STATE OF CALIFORNIA OR ITS OFFICERS OR AGENTS SHALL NOT BE RESPONSIBLE FOR THE ACCURACY OR COMPLETENESS OF ELECTRONIC COPIES OF THIS PLAN SHEET.

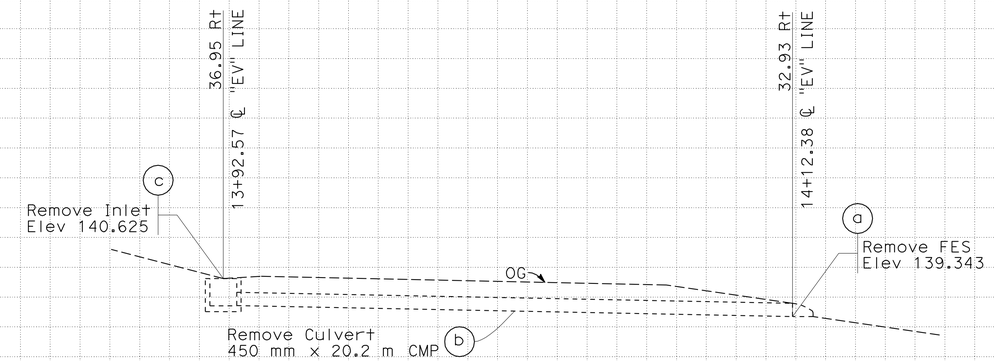

DRAINAGE SYSTEM No. 222

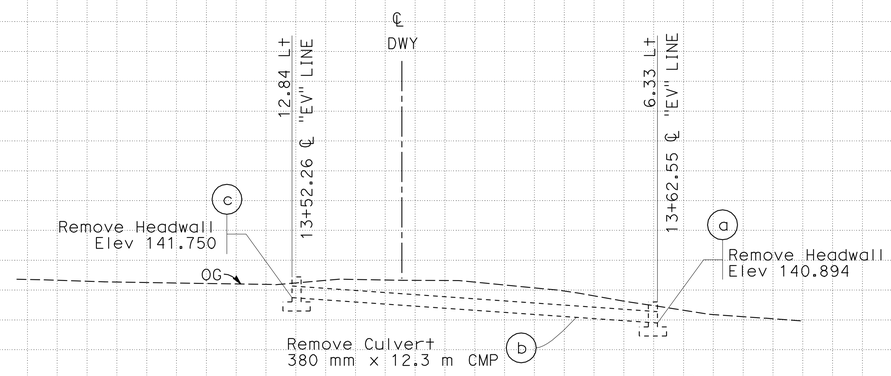

DRAINAGE SYSTEM No. 223

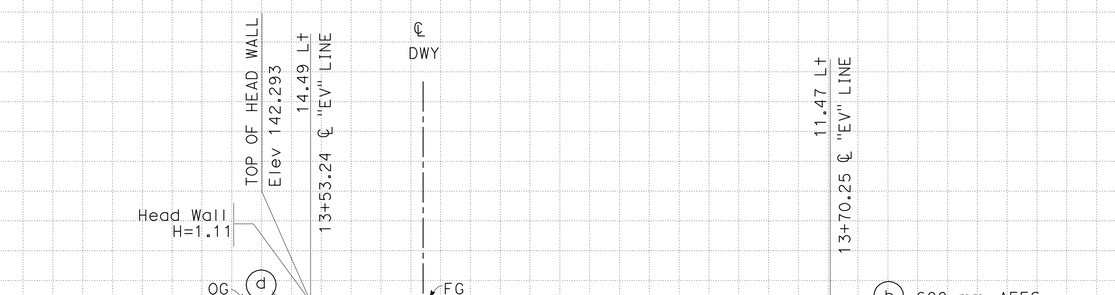

DRAINAGE SYSTEM No. 224

ALL DIMENSIONS ARE IN METERS UNLESS OTHERWISE SHOWN.

DRAINAGE PROFILE DP-160

SCALE: Horiz 1:100
Vert 1:100

Station	
m^3 Exc	
m^3 Emb	

REVISED BY | DATE REVISED

KRIS LAKS | ERIC OLSON

CALCULATED-DESIGNED BY | CHECKED BY

FUNCTIONAL SUPERVISOR: DAVID FRANKE

STATE OF CALIFORNIA - DEPARTMENT OF TRANSPORTATION
Caltrans 06-DESIGN

LAST REVISION 05-10-10 | DATE PLOTTED => 02-AUG-2010 | TIME PLOTTED => 17:43

Dist	COUNTY	ROUTE	KILOMETER POST TOTAL PROJECT	SHEET No.	TOTAL SHEETS
05	Mon	101	R146.8/159.7	515	1402

Eric Olson 5-16-10
REGISTERED CIVIL ENGINEER DATE

7-26-10
PLANS APPROVAL DATE

REGISTERED PROFESSIONAL ENGINEER ERIC H. OLSON No. 60801 Exp. 12/31/10 CIVIL STATE OF CALIFORNIA

THE STATE OF CALIFORNIA OR ITS OFFICERS OR AGENTS SHALL NOT BE RESPONSIBLE FOR THE ACCURACY OR COMPLETENESS OF ELECTRONIC COPIES OF THIS PLAN SHEET.

Caltrans Metric

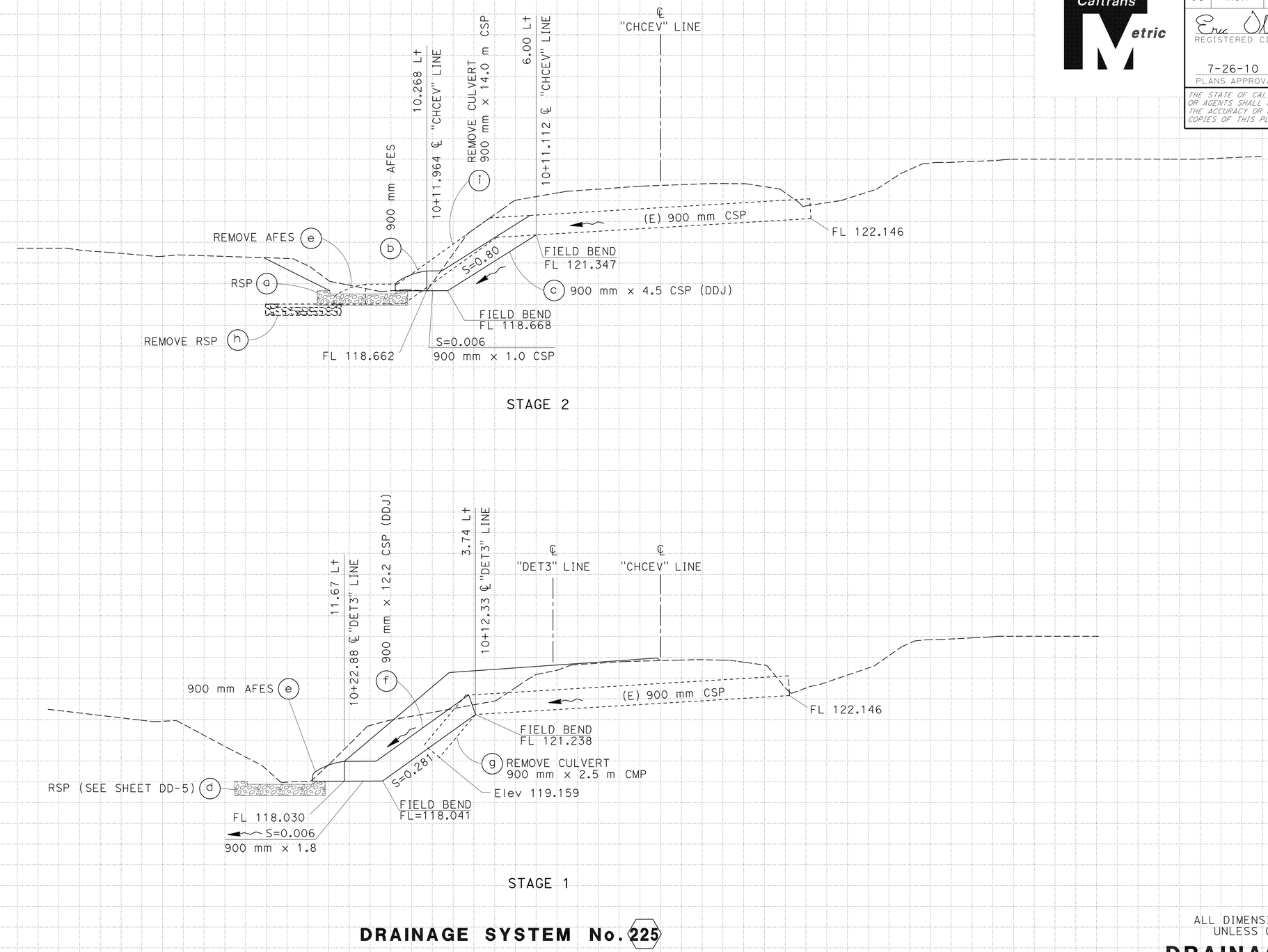

DRAINAGE SYSTEM No. 225

ALL DIMENSIONS ARE IN METERS
UNLESS OTHERWISE SHOWN

DRAINAGE PROFILE

SCALE Horiz 1:100
Vert 1:100

DP-161

Station	
m^3 Exc	
m^3 Emb	

STATE OF CALIFORNIA - DEPARTMENT OF TRANSPORTATION
Caltrans
06-DESIGN

FUNCTIONAL SUPERVISOR: DAVID FRANKE
CALCULATED-DESIGNED BY: CARLOS BLANCAS
CHECKED BY: ERIC OLSON
REVISED BY / DATE REVISED

LAST REVISION 05-10-10
DATE PLOTTED => 02-AUG-2010
TIME PLOTTED => 15:32

Dist	COUNTY	ROUTE	KILOMETER POST TOTAL PROJECT	SHEET No.	TOTAL SHEETS
05	Mon	101	R146.8/159.7	516	1402

Caltrans Metric

Eric Olson 5-16-10
REGISTERED CIVIL ENGINEER DATE

7-26-10
PLANS APPROVAL DATE

REGISTERED PROFESSIONAL ENGINEER ERIC H. OLSON No. 60801 Exp. 12/31/10 CIVIL STATE OF CALIFORNIA

THE STATE OF CALIFORNIA OR ITS OFFICERS OR AGENTS SHALL NOT BE RESPONSIBLE FOR THE ACCURACY OR COMPLETENESS OF ELECTRONIC COPIES OF THIS PLAN SHEET.

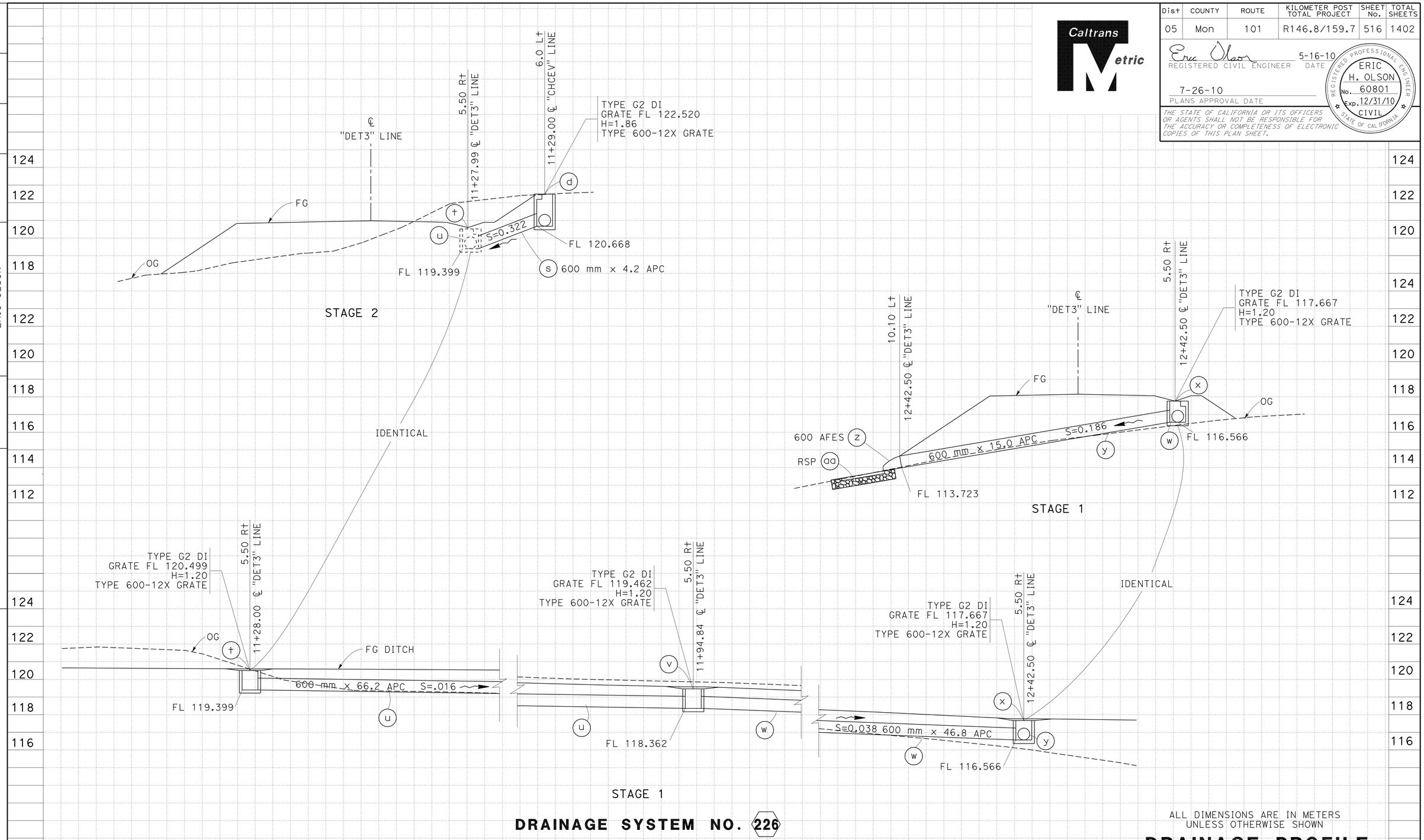

DRAINAGE SYSTEM NO. 226

ALL DIMENSIONS ARE IN METERS
UNLESS OTHERWISE SHOWN

DRAINAGE PROFILE

SCALE Horiz 1:100
Vert 1:100

DP-162

REVISED BY	DATE REVISED
THUAN NGUYEN	ERIC OLSON
CALCULATED-DESIGNED BY	CHECKED BY
FUNCTIONAL SUPERVISOR	DAVID FRANKE

STATE OF CALIFORNIA - DEPARTMENT OF TRANSPORTATION
06 - DESIGN
Caltrans

LAST REVISION 05-10-10
DATE PLOTTED => 02-AUG-2010
TIME PLOTTED => 15:32

Dist	COUNTY	ROUTE	KILOMETER POST TOTAL PROJECT	SHEET No.	TOTAL SHEETS
05	Mon	101	R146.8/159.7	517	1402

Eric Olson 5-16-10
REGISTERED CIVIL ENGINEER DATE

7-26-10
PLANS APPROVAL DATE

REGISTERED PROFESSIONAL ENGINEER ERIC H. OLSON No. 60801 Exp. 12/31/10 CIVIL STATE OF CALIFORNIA

THE STATE OF CALIFORNIA OR ITS OFFICERS OR AGENTS SHALL NOT BE RESPONSIBLE FOR THE ACCURACY OR COMPLETENESS OF ELECTRONIC COPIES OF THIS PLAN SHEET.

Caltrans Metric

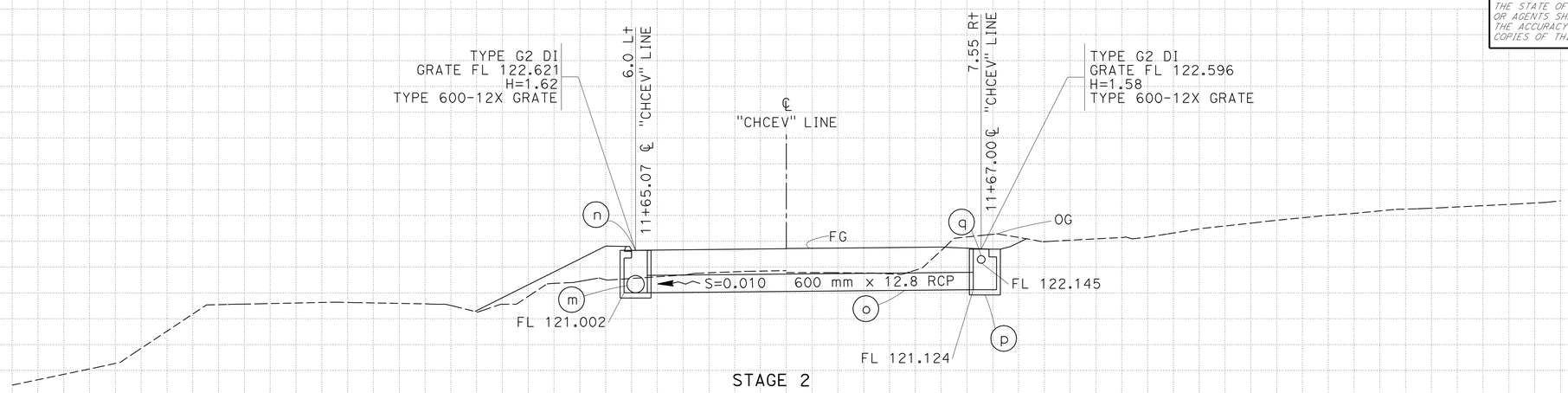

STAGE 2

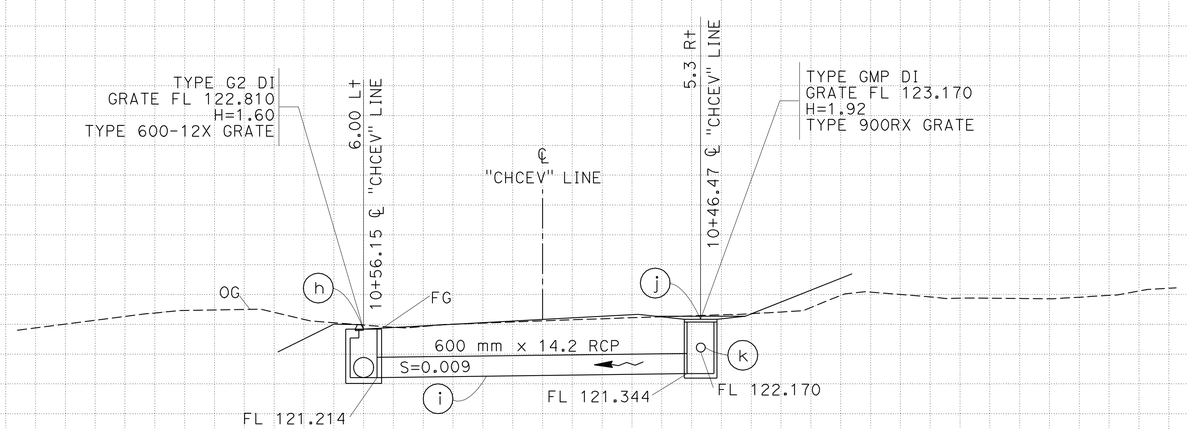

STAGE 2

ALL DIMENSIONS ARE IN METERS
UNLESS OTHERWISE SHOWN

DRAINAGE SYSTEM No. 226 (CONTINUED)

DRAINAGE PROFILE

SCALE Horiz 1:100
Vert 1:100

DP-163

Station	
m^3 Exc	
m^3 Emb	

STATE OF CALIFORNIA - DEPARTMENT OF TRANSPORTATION
Caltrans
06-DESIGN

FUNCTIONAL SUPERVISOR: DAVID FRANKE
CALCULATED-DESIGNED BY: THUAN NGUYEN
CHECKED BY: ERIC OLSON
REVISED BY / DATE REVISED

LAST REVISION 05-10-10 DATE PLOTTED => 02-AUG-2010 TIME PLOTTED => 15:32

Dist	COUNTY	ROUTE	KILOMETER POST TOTAL PROJECT	SHEET No.	TOTAL SHEETS
05	Mon	101	R146.8/159.7	518	1402

Eric Olson 5-16-10
REGISTERED CIVIL ENGINEER DATE

7-26-10
PLANS APPROVAL DATE

REGISTERED PROFESSIONAL ENGINEER ERIC H. OLSON No. 60801 Exp. 12/31/10 CIVIL STATE OF CALIFORNIA

THE STATE OF CALIFORNIA OR ITS OFFICERS OR AGENTS SHALL NOT BE RESPONSIBLE FOR THE ACCURACY OR COMPLETENESS OF ELECTRONIC COPIES OF THIS PLAN SHEET.

Caltrans Metric

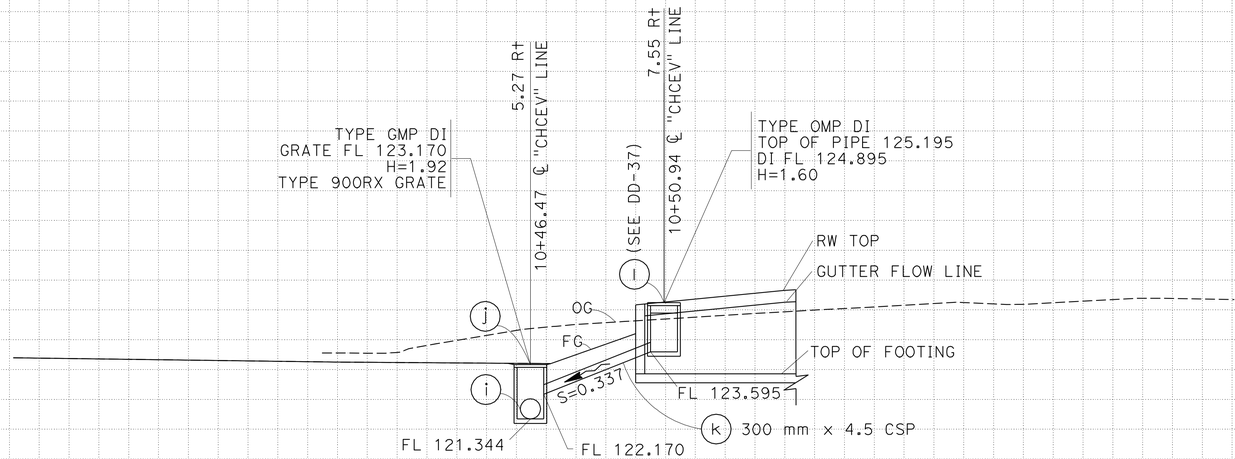

STAGE 2

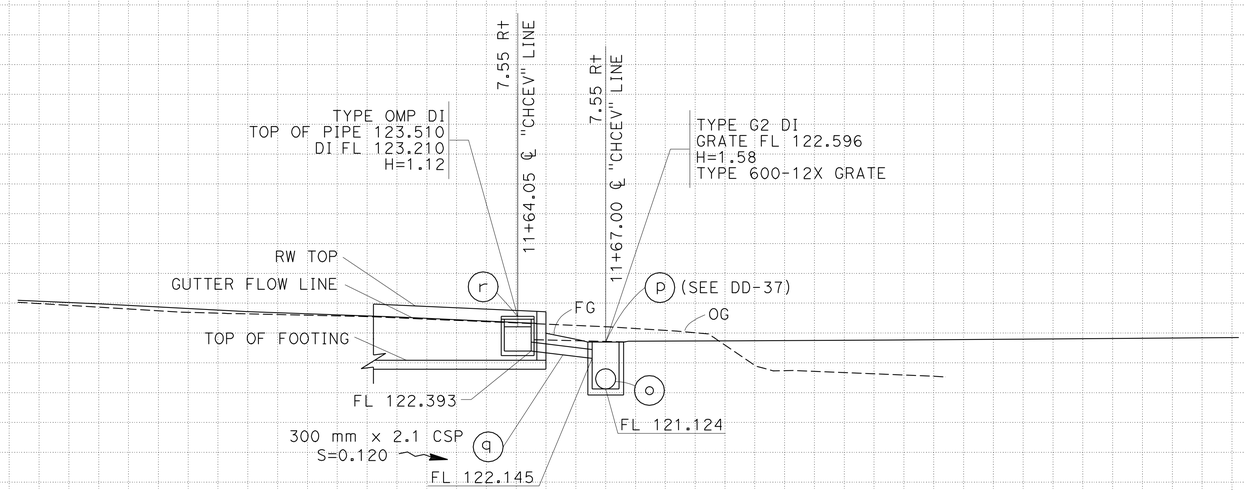

STAGE 2

ALL DIMENSIONS ARE IN METERS
UNLESS OTHERWISE SHOWN

DRAINAGE SYSTEM No. 226 (CONTINUED)

DRAINAGE PROFILE

SCALE Horiz 1:100
Vert 1:100

DP-164

Station	
m^3	Exc
	Emb

STATE OF CALIFORNIA - DEPARTMENT OF TRANSPORTATION
Caltrans 06 - DESIGN

FUNCTIONAL SUPERVISOR: DAVID FRANKE
CALCULATED-DESIGNED BY: THUAN NGUYEN
CHECKED BY: ERIC OLSON
REVISED BY / DATE REVISED

LAST REVISION 05-10-10 DATE PLOTTED => 02-AUG-2010 TIME PLOTTED => 15:32

Dist	COUNTY	ROUTE	KILOMETER POST TOTAL PROJECT	SHEET No.	TOTAL SHEETS
05	Mon	101	R146.8/159.7	519	1402

Eric Olson 5-16-10
REGISTERED CIVIL ENGINEER DATE

7-26-10
PLANS APPROVAL DATE

REGISTERED PROFESSIONAL ENGINEER ERIC H. OLSON No. 60801 Exp. 12/31/10 CIVIL STATE OF CALIFORNIA

THE STATE OF CALIFORNIA OR ITS OFFICERS OR AGENTS SHALL NOT BE RESPONSIBLE FOR THE ACCURACY OR COMPLETENESS OF ELECTRONIC COPIES OF THIS PLAN SHEET.

Caltrans Metric

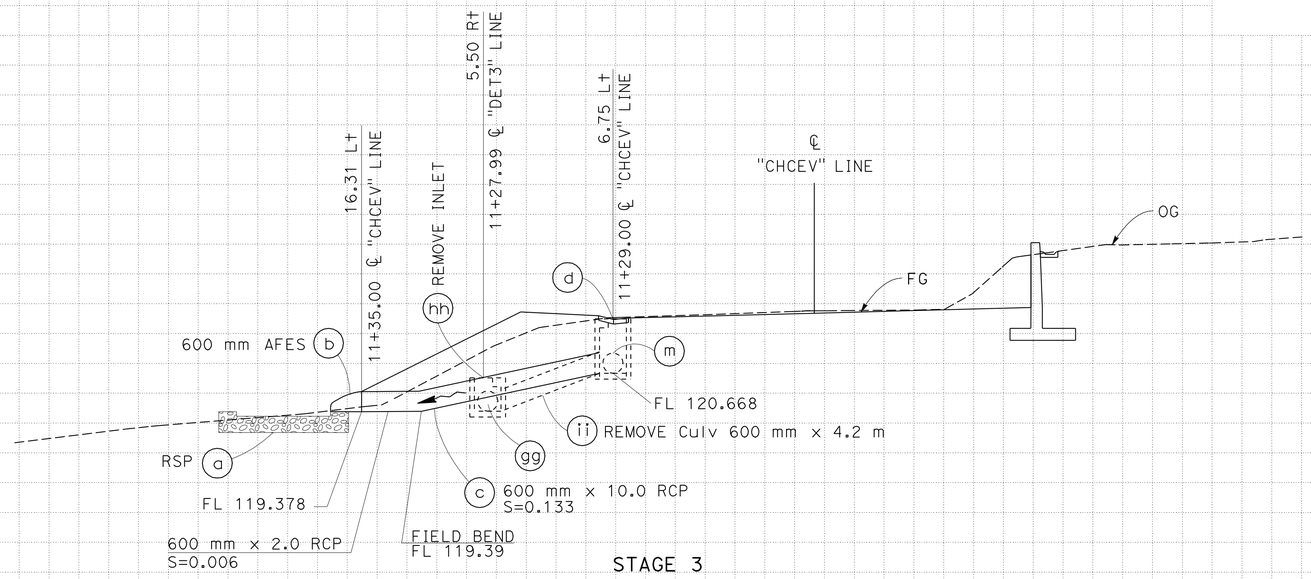

STAGE 3

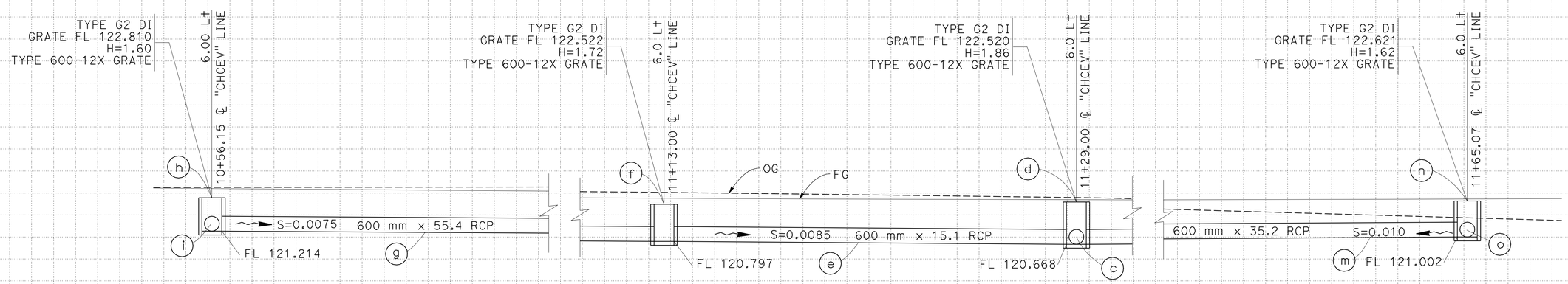

STAGE 2

ALL DIMENSIONS ARE IN METERS
UNLESS OTHERWISE SHOWN

DRAINAGE SYSTEM No. 226 (CONTINUED)

DRAINAGE PROFILE

SCALE Horiz 1:100
Vert 1:100

DP-165

Station	
m^3 Exc	
m^3 Emb	

STATE OF CALIFORNIA - DEPARTMENT OF TRANSPORTATION
Caltrans 06-DESIGN

FUNCTIONAL SUPERVISOR: DAVID FRANKE
CALCULATED-DESIGNED BY: THUAN NGUYEN
CHECKED BY: ERIC OLSON
REVISED BY / DATE REVISED

LAST REVISION 05-10-10 DATE PLOTTED => 02-AUG-2010 TIME PLOTTED => 15:32

DIST	COUNTY	ROUTE	KILOMETER POST TOTAL PROJECT	SHEET No.	TOTAL SHEETS
05	Mon	101	R146.8/159.7	520	1402

Eric Olson 5-16-10
REGISTERED CIVIL ENGINEER DATE

7-26-10
PLANS APPROVAL DATE

REGISTERED PROFESSIONAL ENGINEER ERIC H. OLSON No. 60801 Exp. 12/31/10 CIVIL STATE OF CALIFORNIA

THE STATE OF CALIFORNIA OR ITS OFFICERS OR AGENTS SHALL NOT BE RESPONSIBLE FOR THE ACCURACY OR COMPLETENESS OF ELECTRONIC COPIES OF THIS PLAN SHEET.

Caltrans Metric

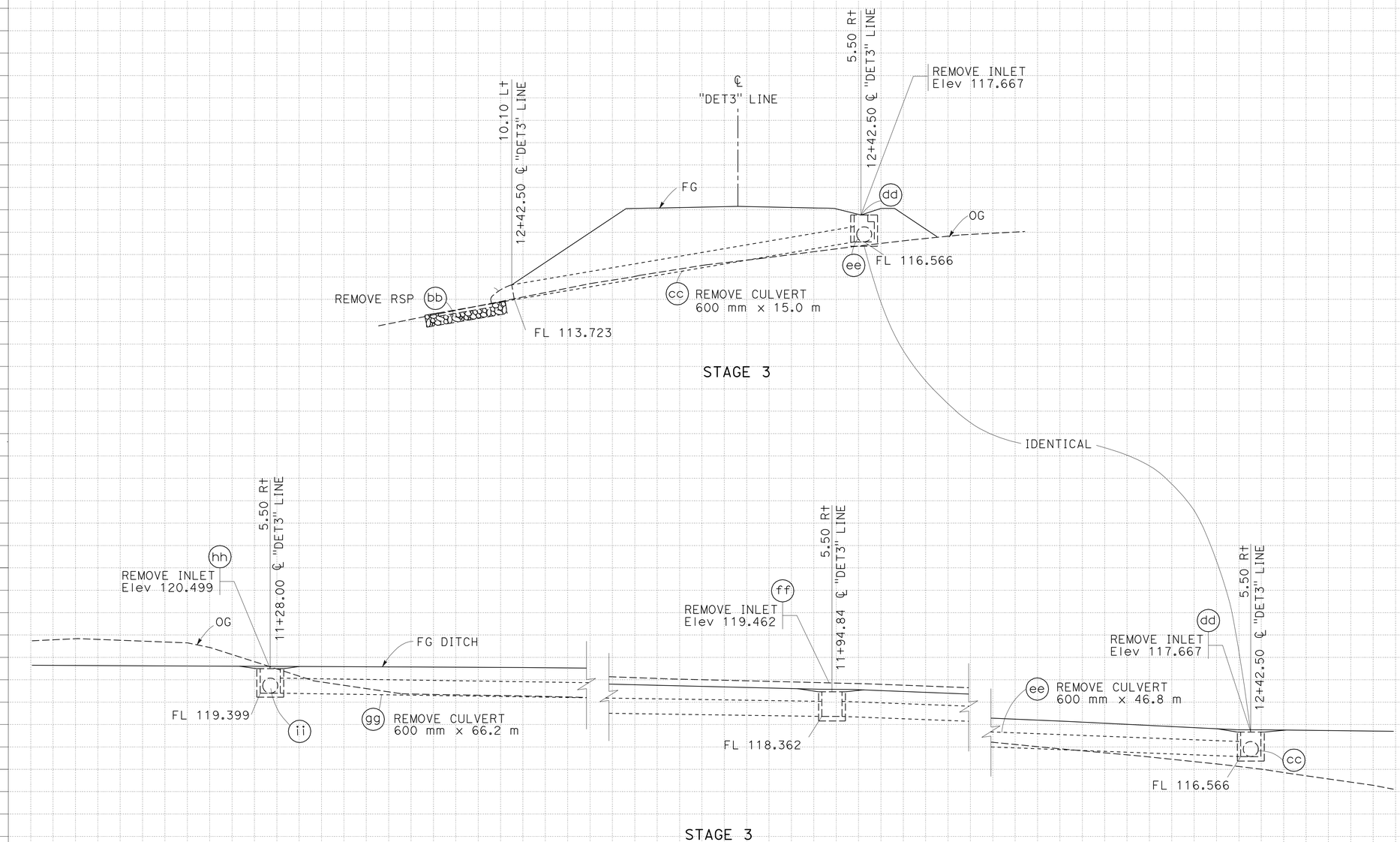

ALL DIMENSIONS ARE IN METERS
UNLESS OTHERWISE SHOWN

DRAINAGE SYSTEM No. 226 (CONTINUED)

DRAINAGE PROFILE

SCALE Horiz 1:100
Vert 1:100

DP-166

Station	
m^3	Exc
	Emb

STATE OF CALIFORNIA - DEPARTMENT OF TRANSPORTATION
Caltrans 06 - DESIGN

FUNCTIONAL SUPERVISOR DAVID FRANKE
CALCULATED-DESIGNED BY THUAN NGUYEN
CHECKED BY ERIC OLSON
REVISED BY
DATE REVISED

LAST REVISION DATE PLOTTED => 02-AUG-2010
05-10-10 TIME PLOTTED => 15:32

Dist	COUNTY	ROUTE	KILOMETER POST TOTAL PROJECT	SHEET No.	TOTAL SHEETS
05	Mon	101	R146.8/159.7	521	1402

Caltrans Metric

Eric Olson 5-16-10
REGISTERED CIVIL ENGINEER DATE

7-26-10
PLANS APPROVAL DATE

REGISTERED PROFESSIONAL ENGINEER ERIC H. OLSON No. 60801 Exp. 12/31/10 CIVIL STATE OF CALIFORNIA

THE STATE OF CALIFORNIA OR ITS OFFICERS OR AGENTS SHALL NOT BE RESPONSIBLE FOR THE ACCURACY OR COMPLETENESS OF ELECTRONIC COPIES OF THIS PLAN SHEET.

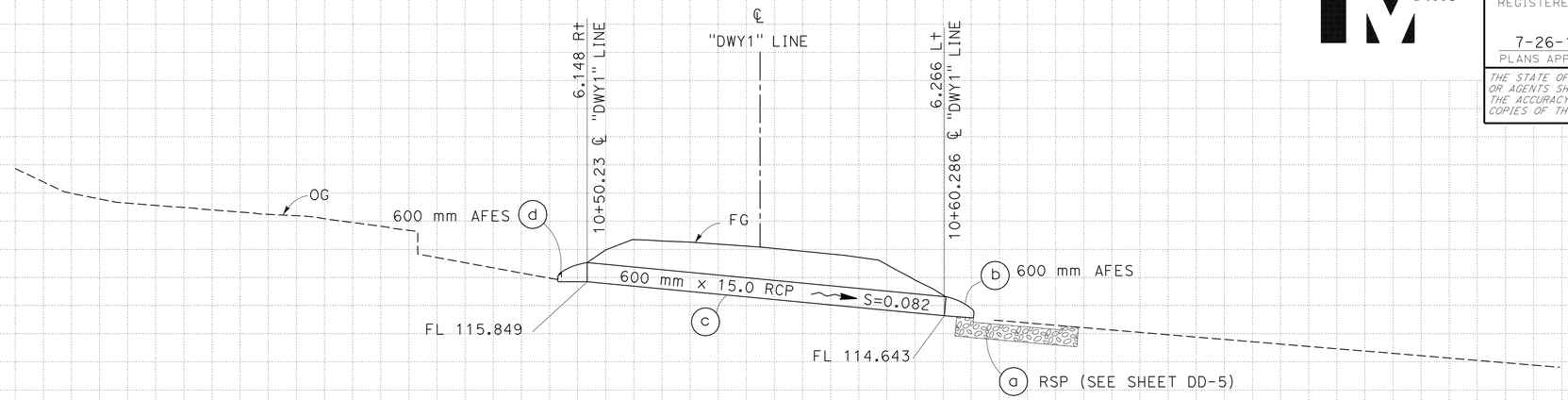

DRAINAGE SYSTEM No. 227

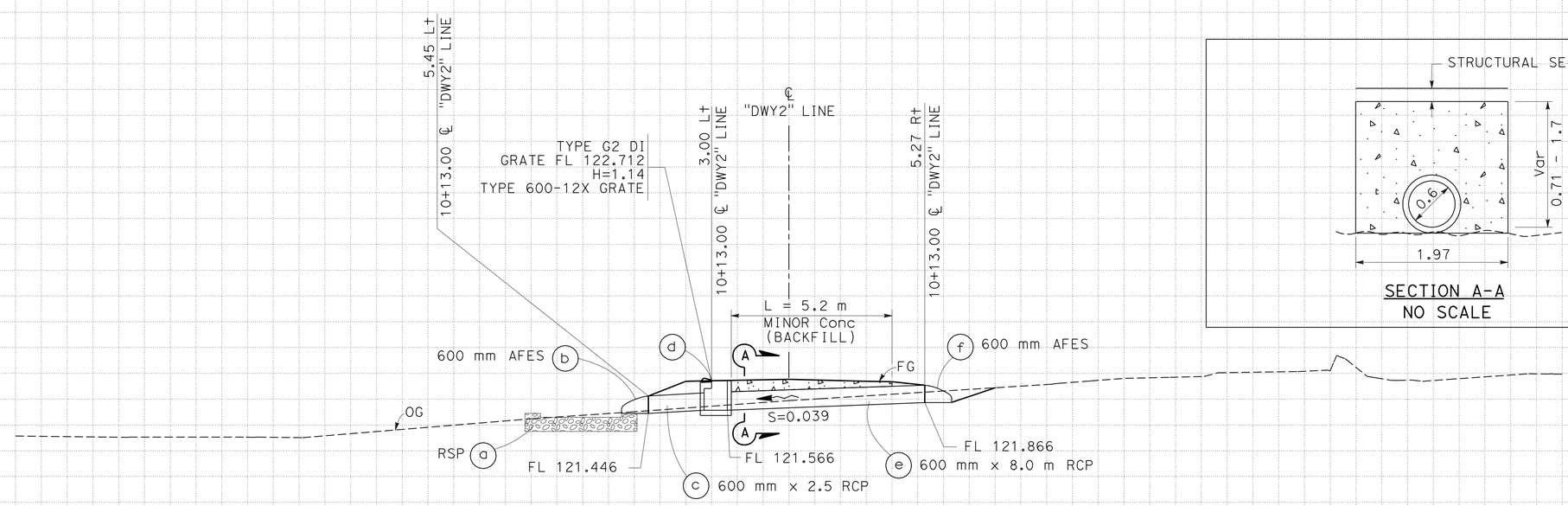

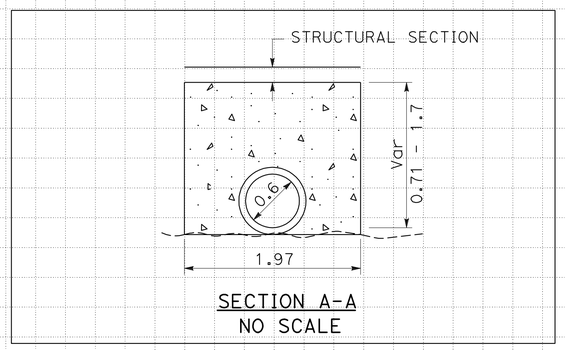

DRAINAGE SYSTEM No. 228

ALL DIMENSIONS ARE IN METERS
UNLESS OTHERWISE SHOWN

DRAINAGE PROFILE

SCALE Horiz 1:100
Vert 1:100

DP-167

STATE OF CALIFORNIA - DEPARTMENT OF TRANSPORTATION
Caltrans
06-DESIGN

FUNCTIONAL SUPERVISOR: DAVID FRANKE
CALCULATED-DESIGNED BY: KRIS LAKS
CHECKED BY: ERIC OLSON
REVISED BY / DATE REVISED

Station
m³ Exc
Emb

LAST REVISION 05-10-10
DATE PLOTTED => 02-AUG-2010
TIME PLOTTED => 15:32

Dist	COUNTY	ROUTE	KILOMETER POST TOTAL PROJECT	SHEET No.	TOTAL SHEETS
05	Mon	101	R146.8/159.7	522	1402

Eric Olson 5-16-10
REGISTERED CIVIL ENGINEER DATE

7-26-10
PLANS APPROVAL DATE

REGISTERED PROFESSIONAL ENGINEER ERIC H. OLSON No. 60801 Exp. 12/31/10 CIVIL STATE OF CALIFORNIA

THE STATE OF CALIFORNIA OR ITS OFFICERS OR AGENTS SHALL NOT BE RESPONSIBLE FOR THE ACCURACY OR COMPLETENESS OF ELECTRONIC COPIES OF THIS PLAN SHEET.

Caltrans Metric

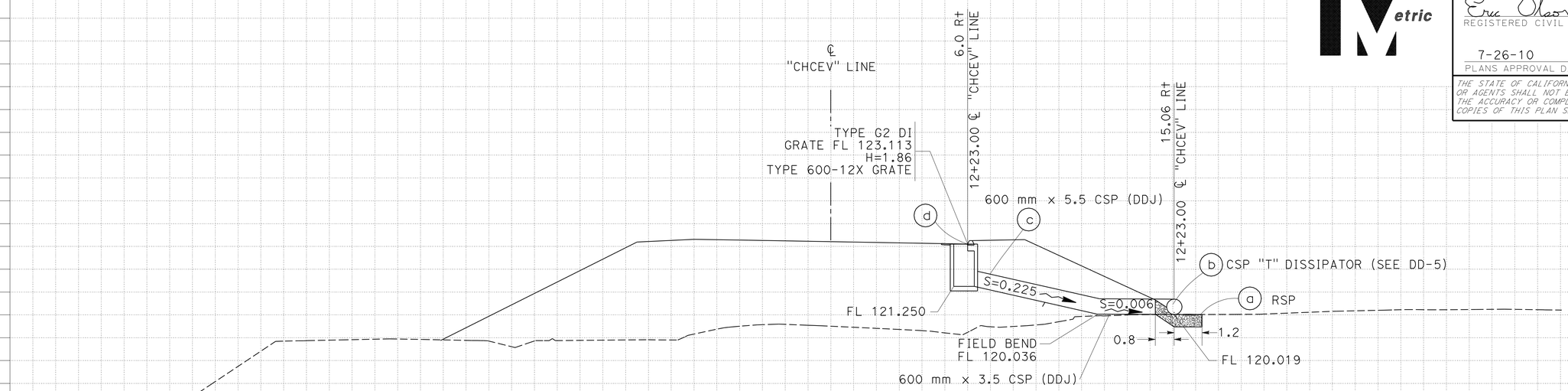

DRAINAGE SYSTEM No. 229

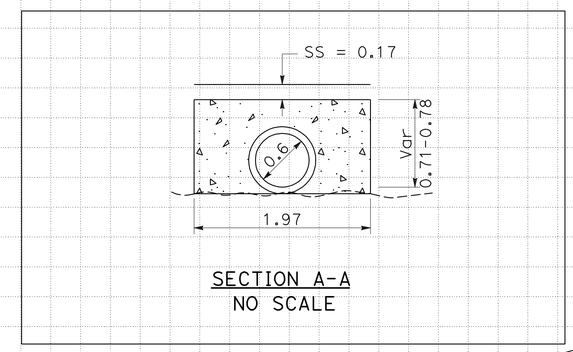

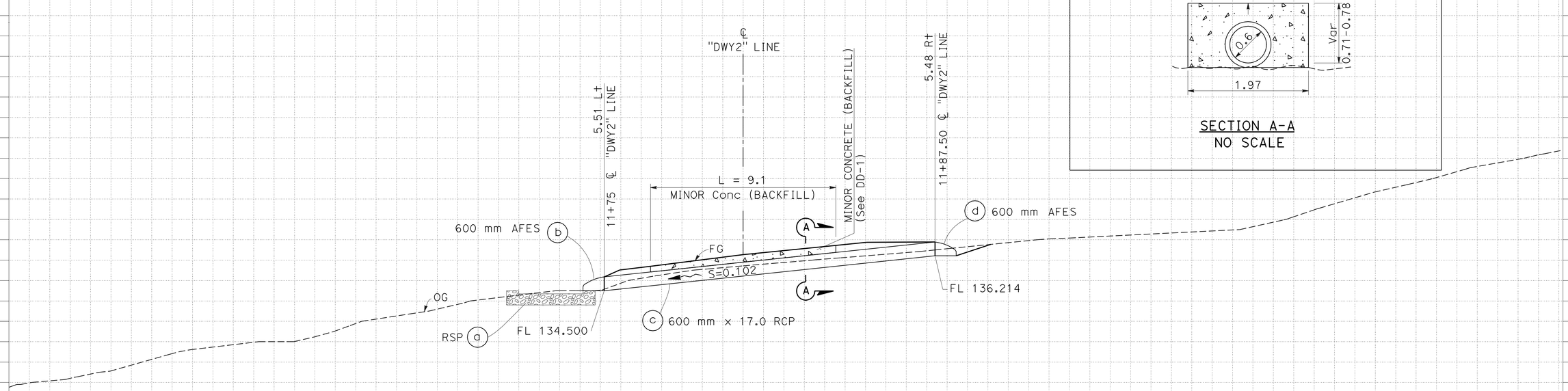

DRAINAGE SYSTEM No. 230

ALL DIMENSIONS ARE IN METERS
UNLESS OTHERWISE SHOWN

DRAINAGE PROFILE

SCALE Horiz 1:100
Vert 1:100

DP-168

REVISED BY	DATE REVISED
KRIS LAKS	ERIC OLSON

CALCULATED-DESIGNED BY / CHECKED BY

FUNCTIONAL SUPERVISOR **DAVID FRANKE**

STATE OF CALIFORNIA - DEPARTMENT OF TRANSPORTATION
Caltrans **06-DESIGN**

Station	
m^3 Exc	
m^3 Emb	

LAST REVISION 05-10-10 DATE PLOTTED => 02-AUG-2010 TIME PLOTTED => 15:32

Dist	COUNTY	ROUTE	KILOMETER POST TOTAL PROJECT	SHEET No.	TOTAL SHEETS
05	Mon	101	R146.8/159.7	523	1402

Caltrans Metric

Eric Olson 5-16-10
REGISTERED CIVIL ENGINEER DATE

7-26-10
PLANS APPROVAL DATE

REGISTERED PROFESSIONAL ENGINEER ERIC H. OLSON No. 60801 Exp. 12/31/10 CIVIL STATE OF CALIFORNIA

THE STATE OF CALIFORNIA OR ITS OFFICERS OR AGENTS SHALL NOT BE RESPONSIBLE FOR THE ACCURACY OR COMPLETENESS OF ELECTRONIC COPIES OF THIS PLAN SHEET.

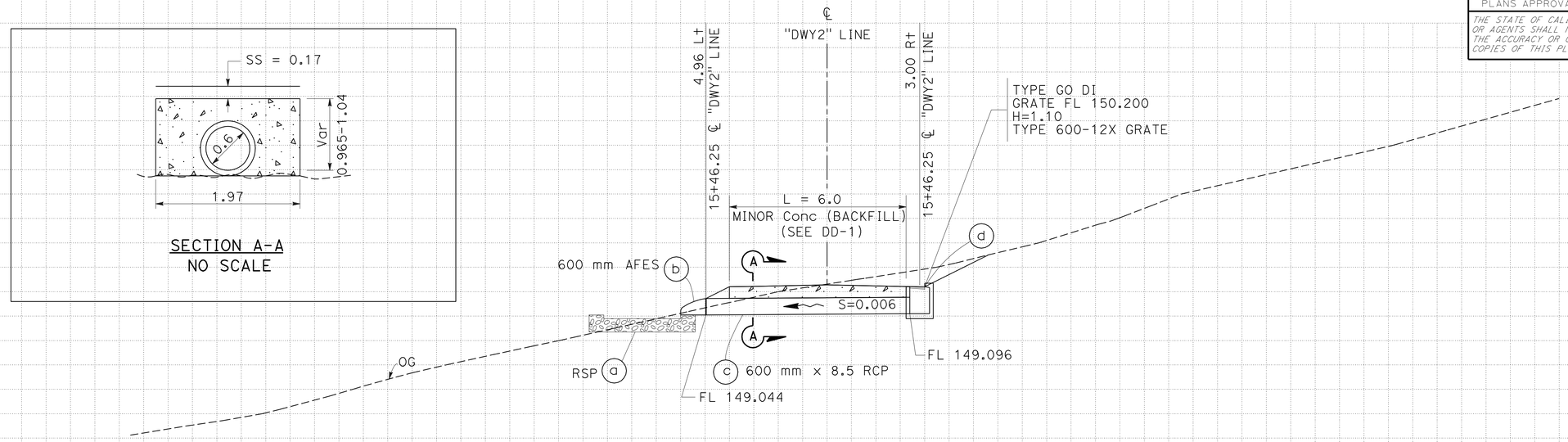

DRAINAGE SYSTEM No. 231

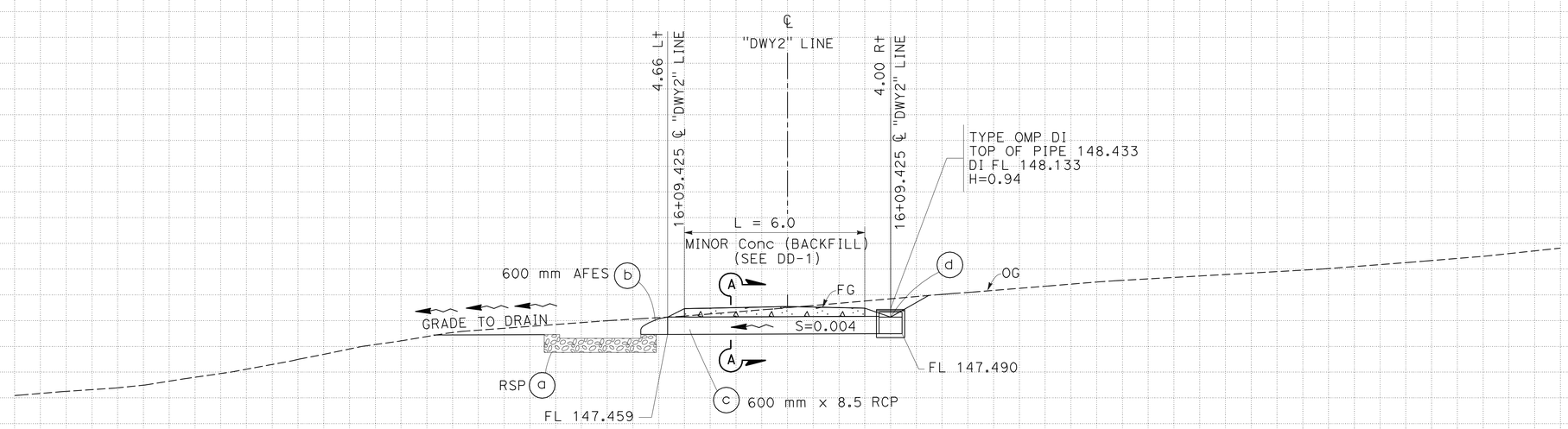

DRAINAGE SYSTEM No. 232

ALL DIMENSIONS ARE IN METERS
UNLESS OTHERWISE SHOWN

DRAINAGE PROFILE

SCALE Horiz 1:100
Vert 1:100

DP-169

REVISED BY	DATE REVISED
THUAN NGUYEN	ERIC OLSON
CALCULATED-DESIGNED BY	CHECKED BY
FUNCTIONAL SUPERVISOR	DAVID FRANKE

STATE OF CALIFORNIA - DEPARTMENT OF TRANSPORTATION
Caltrans 06-DESIGN

Station	
m^3	Exc
	Emb

LAST REVISION 05-10-10 DATE PLOTTED => 02-AUG-2010 TIME PLOTTED => 15:33

Dist	COUNTY	ROUTE	KILOMETER POST TOTAL PROJECT	SHEET No.	TOTAL SHEETS
05	Mon	101	R146.8/159.7	524	1402

Eric Olson 5-16-10
REGISTERED CIVIL ENGINEER DATE

7-26-10
PLANS APPROVAL DATE

REGISTERED PROFESSIONAL ENGINEER ERIC H. OLSON No. 60801 Exp. 12/31/10 CIVIL STATE OF CALIFORNIA

THE STATE OF CALIFORNIA OR ITS OFFICERS OR AGENTS SHALL NOT BE RESPONSIBLE FOR THE ACCURACY OR COMPLETENESS OF ELECTRONIC COPIES OF THIS PLAN SHEET.

Caltrans Metric

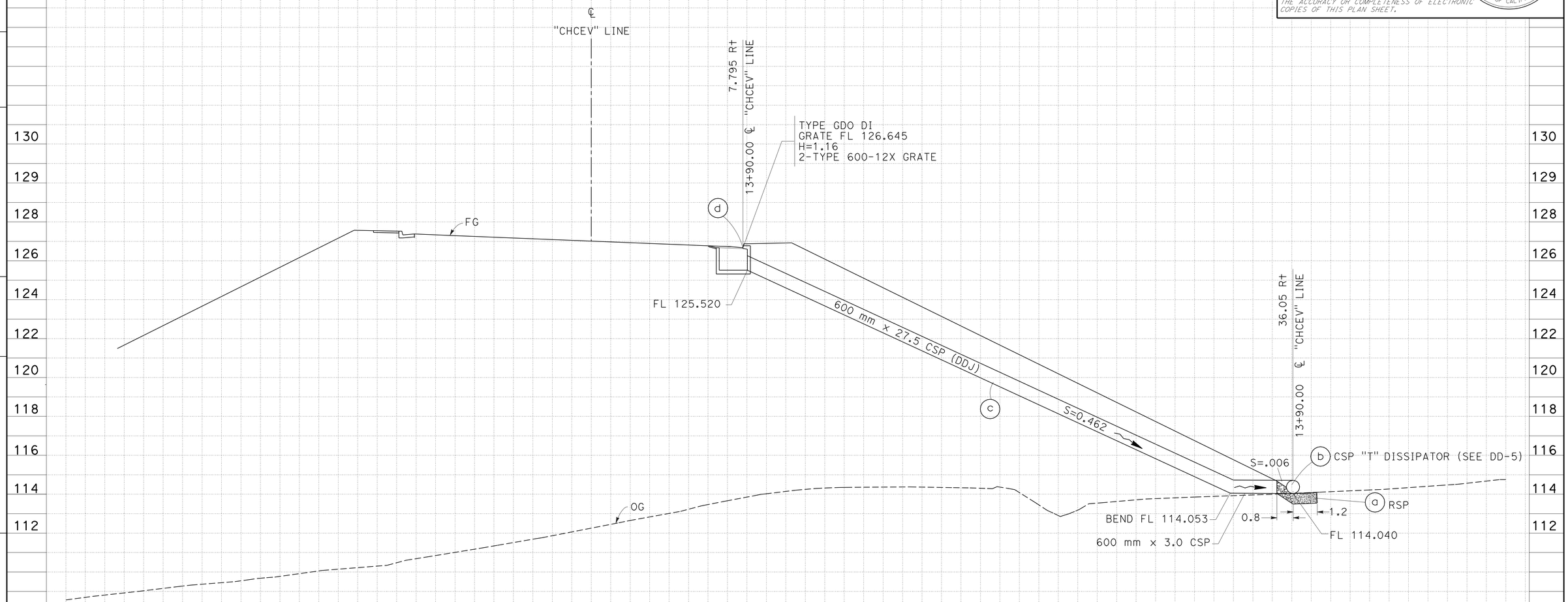

DRAINAGE SYSTEM No. 233

ALL DIMENSIONS ARE IN METERS
UNLESS OTHERWISE SHOWN

DRAINAGE PROFILE

SCALE Horiz 1:100
Vert 1:100

DP-170

Station	
m^3 Exc	
m^3 Emb	

REVISED BY | DATE REVISED

KRIS LAKS | ERIC OLSON

CALCULATED-DESIGNED BY | CHECKED BY

FUNCTIONAL SUPERVISOR **DAVID FRANKE**

STATE OF CALIFORNIA - DEPARTMENT OF TRANSPORTATION
Caltrans **06-DESIGN**

LAST REVISION 05-10-10 DATE PLOTTED => 02-AUG-2010 TIME PLOTTED => 15:33

Dist	COUNTY	ROUTE	KILOMETER POST TOTAL PROJECT	SHEET No.	TOTAL SHEETS
05	Mon	101	R146.8/159.7	525	1402

Caltrans Metric

Eric Olson 5-16-10
REGISTERED CIVIL ENGINEER DATE

7-26-10
PLANS APPROVAL DATE

REGISTERED PROFESSIONAL ENGINEER ERIC H. OLSON No. 60801 Exp. 12/31/10 CIVIL STATE OF CALIFORNIA

THE STATE OF CALIFORNIA OR ITS OFFICERS OR AGENTS SHALL NOT BE RESPONSIBLE FOR THE ACCURACY OR COMPLETENESS OF ELECTRONIC COPIES OF THIS PLAN SHEET.

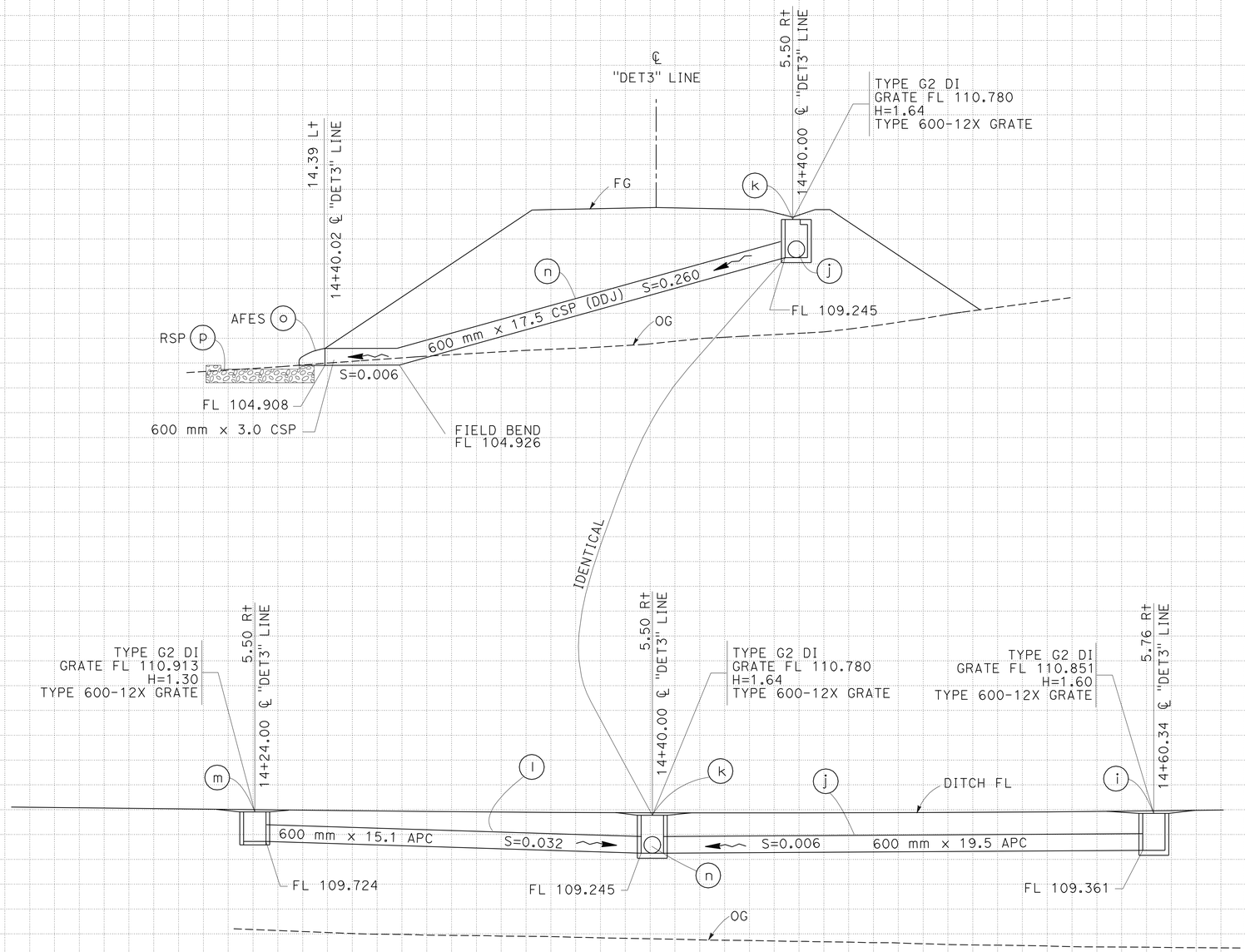

STAGE 1

DRAINAGE SYSTEM No. 234

ALL DIMENSIONS ARE IN METERS
UNLESS OTHERWISE SHOWN

DRAINAGE PROFILE

SCALE Horiz 1:100
Vert 1:100

DP-171

REVISED BY	DATE REVISED
THUAN NGUYEN	
ERIC OLSON	

CALCULATED-DESIGNED BY
CHECKED BY

FUNCTIONAL SUPERVISOR **DAVID FRANKE**

STATE OF CALIFORNIA - DEPARTMENT OF TRANSPORTATION
Caltrans **06 - DESIGN**

Station
m^3 Exc
Emb

LAST REVISION 05-10-10
DATE PLOTTED => 02-AUG-2010
TIME PLOTTED => 15:33

Dist	COUNTY	ROUTE	KILOMETER POST TOTAL PROJECT	SHEET No.	TOTAL SHEETS
05	Mon	101	R146.8/159.7	526	1402

Eric Olson 5-16-10
REGISTERED CIVIL ENGINEER DATE

7-26-10
PLANS APPROVAL DATE

REGISTERED PROFESSIONAL ENGINEER ERIC H. OLSON No. 60801 Exp. 12/31/10 CIVIL STATE OF CALIFORNIA

THE STATE OF CALIFORNIA OR ITS OFFICERS OR AGENTS SHALL NOT BE RESPONSIBLE FOR THE ACCURACY OR COMPLETENESS OF ELECTRONIC COPIES OF THIS PLAN SHEET.

Caltrans Metric

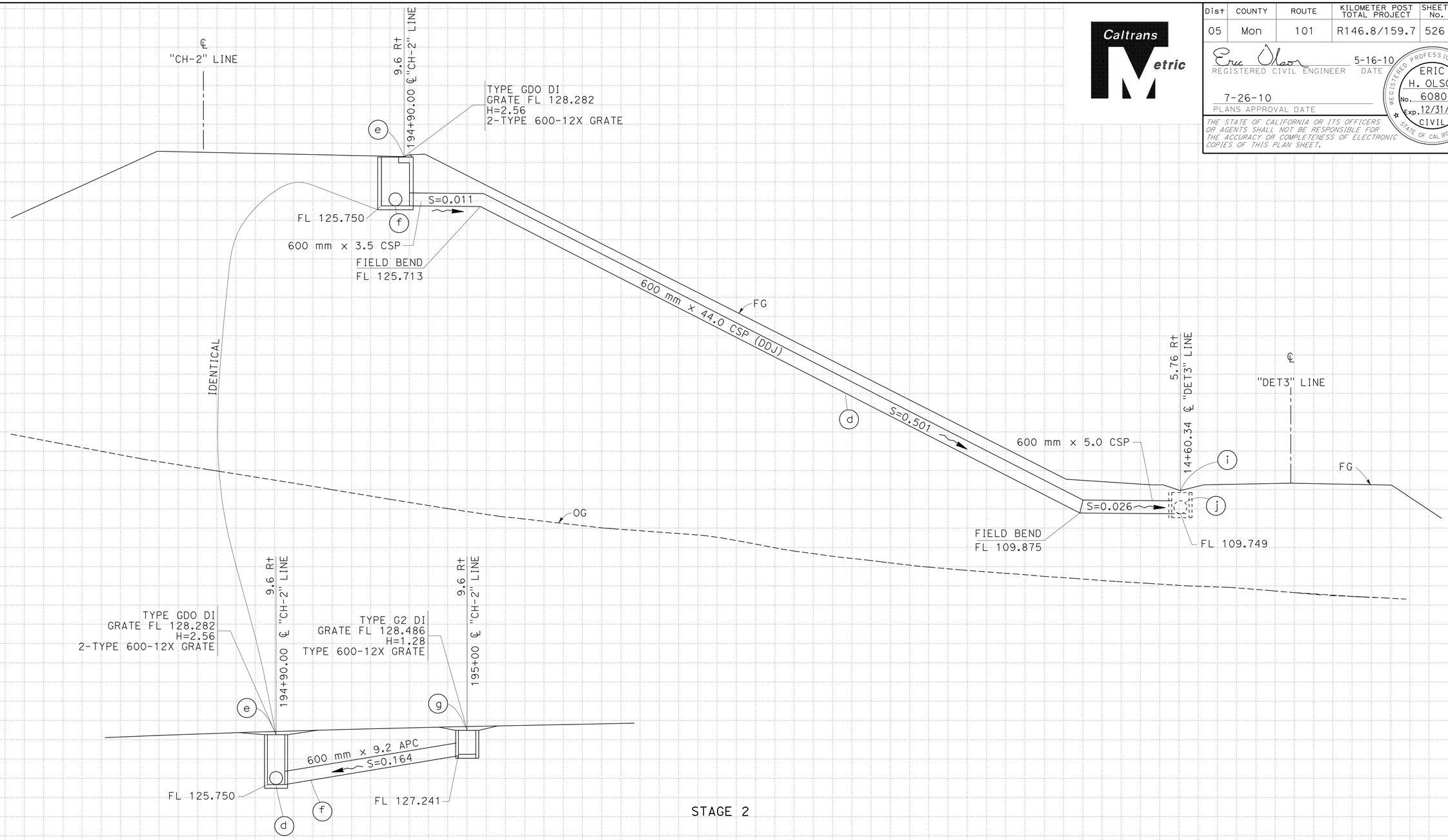

STAGE 2

DRAINAGE SYSTEM No. 234 (CONTINUED)

ALL DIMENSIONS ARE IN METERS
UNLESS OTHERWISE SHOWN

DRAINAGE PROFILE

SCALE Horiz 1:100
Vert 1:100

DP-172

REVISED BY	DATE REVISED
THUAN NGUYEN	ERIC OLSON

CALCULATED-DESIGNED BY
CHECKED BY

FUNCTIONAL SUPERVISOR **DAVID FRANKE**

STATE OF CALIFORNIA - DEPARTMENT OF TRANSPORTATION
Caltrans **06 - DESIGN**

Station	
m^3	Exc
	Emb

LAST REVISION 05-10-10 DATE PLOTTED => 02-AUG-2010 TIME PLOTTED => 15:33

Dist	COUNTY	ROUTE	KILOMETER POST TOTAL PROJECT	SHEET No.	TOTAL SHEETS
05	Mon	101	R146.8/159.7	527	1402

Eric Olson 5-16-10
REGISTERED CIVIL ENGINEER DATE

7-26-10
PLANS APPROVAL DATE

REGISTERED PROFESSIONAL ENGINEER ERIC H. OLSON No. 60801 Exp. 12/31/10 CIVIL STATE OF CALIFORNIA

THE STATE OF CALIFORNIA OR ITS OFFICERS OR AGENTS SHALL NOT BE RESPONSIBLE FOR THE ACCURACY OR COMPLETENESS OF ELECTRONIC COPIES OF THIS PLAN SHEET.

Caltrans Metric

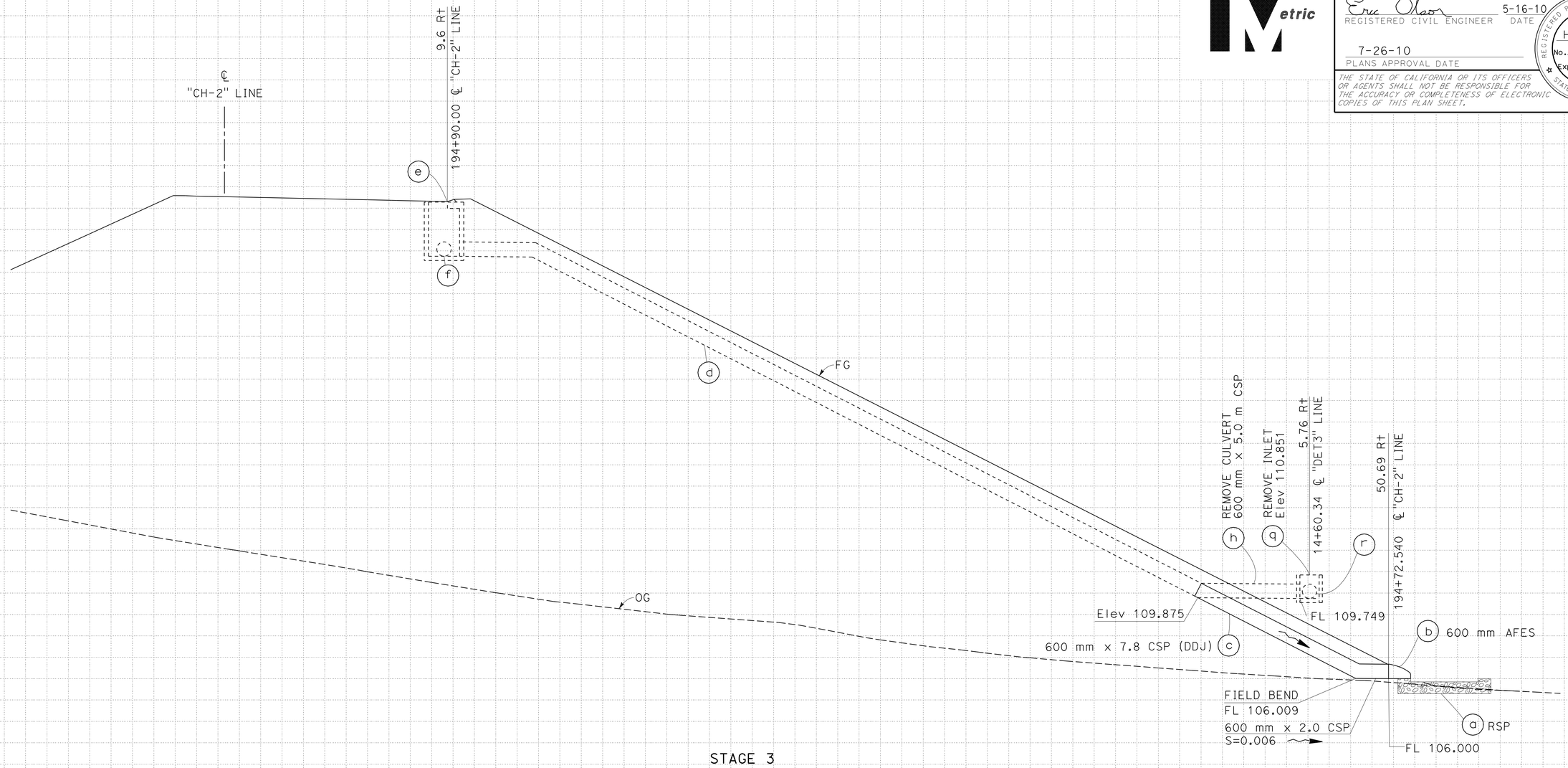

STAGE 3

DRAINAGE SYSTEM No. 234 (CONTINUED)

ALL DIMENSIONS ARE IN METERS
UNLESS OTHERWISE SHOWN

DRAINAGE PROFILE

SCALE Horiz 1:100
Vert 1:100

DP-173

Station	
m^3 Exc	
m^3 Emb	

STATE OF CALIFORNIA - DEPARTMENT OF TRANSPORTATION
Caltrans 06 - DESIGN

FUNCTIONAL SUPERVISOR: DAVID FRANKE
CALCULATED-DESIGNED BY: THUAN NGUYEN
CHECKED BY: ERIC OLSON
REVISED BY / DATE REVISED

LAST REVISION 05-10-10 DATE PLOTTED => 02-AUG-2010 TIME PLOTTED => 15:33

Dist	COUNTY	ROUTE	KILOMETER POST TOTAL PROJECT	SHEET No.	TOTAL SHEETS
05	Mon	101	R146.8/159.7	528	1402

Caltrans Metric

Eric Olson 5-16-10
REGISTERED CIVIL ENGINEER DATE

7-26-10
PLANS APPROVAL DATE

REGISTERED PROFESSIONAL ENGINEER ERIC H. OLSON No. 60801 Exp. 12/31/10 CIVIL STATE OF CALIFORNIA

THE STATE OF CALIFORNIA OR ITS OFFICERS OR AGENTS SHALL NOT BE RESPONSIBLE FOR THE ACCURACY OR COMPLETENESS OF ELECTRONIC COPIES OF THIS PLAN SHEET.

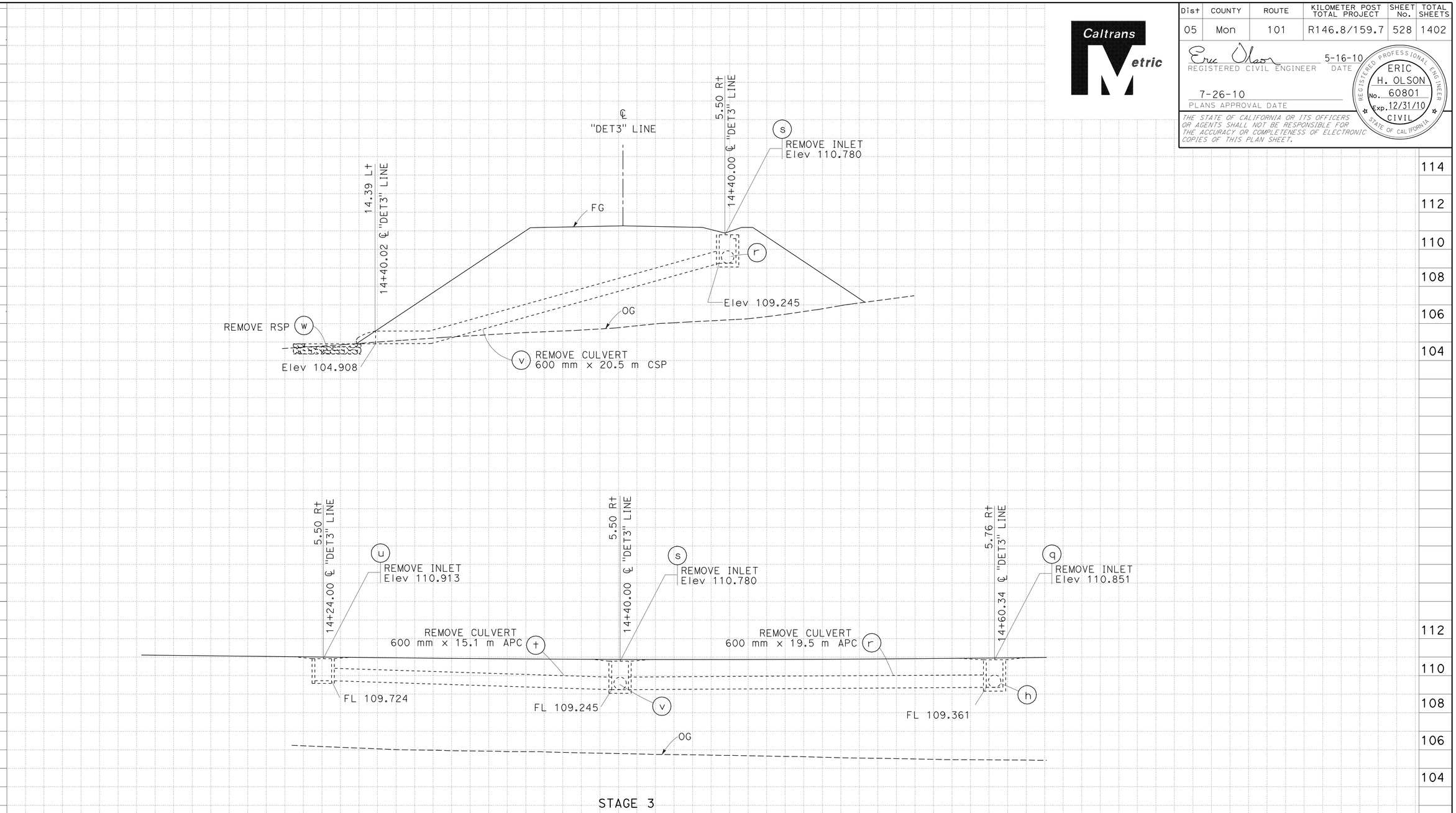

STAGE 3

DRAINAGE SYSTEM No. 234 (CONTINUED)

ALL DIMENSIONS ARE IN METERS
UNLESS OTHERWISE SHOWN

DRAINAGE PROFILE

SCALE Horiz 1:100
Vert 1:100

DP-174

REVISED BY	DATE REVISED
THUAN NGUYEN	
ERIC OLSON	

CALCULATED-DESIGNED BY
CHECKED BY

FUNCTIONAL SUPERVISOR **DAVID FRANKE**

STATE OF CALIFORNIA - DEPARTMENT OF TRANSPORTATION
Caltrans **06 - DESIGN**

Station
m^3 Exc
Emb

LAST REVISION 05-10-10
DATE PLOTTED => 02-AUG-2010
TIME PLOTTED => 15:33

Dist	COUNTY	ROUTE	KILOMETER POST TOTAL PROJECT	SHEET No.	TOTAL SHEETS
05	Mon	101	R146.8/159.7	529	1402

Eric Olson 5-16-10
REGISTERED CIVIL ENGINEER DATE

7-26-10
PLANS APPROVAL DATE

REGISTERED PROFESSIONAL ENGINEER ERIC H. OLSON No. 60801 Exp. 12/31/10 CIVIL STATE OF CALIFORNIA

THE STATE OF CALIFORNIA OR ITS OFFICERS OR AGENTS SHALL NOT BE RESPONSIBLE FOR THE ACCURACY OR COMPLETENESS OF ELECTRONIC COPIES OF THIS PLAN SHEET.

Caltrans Metric

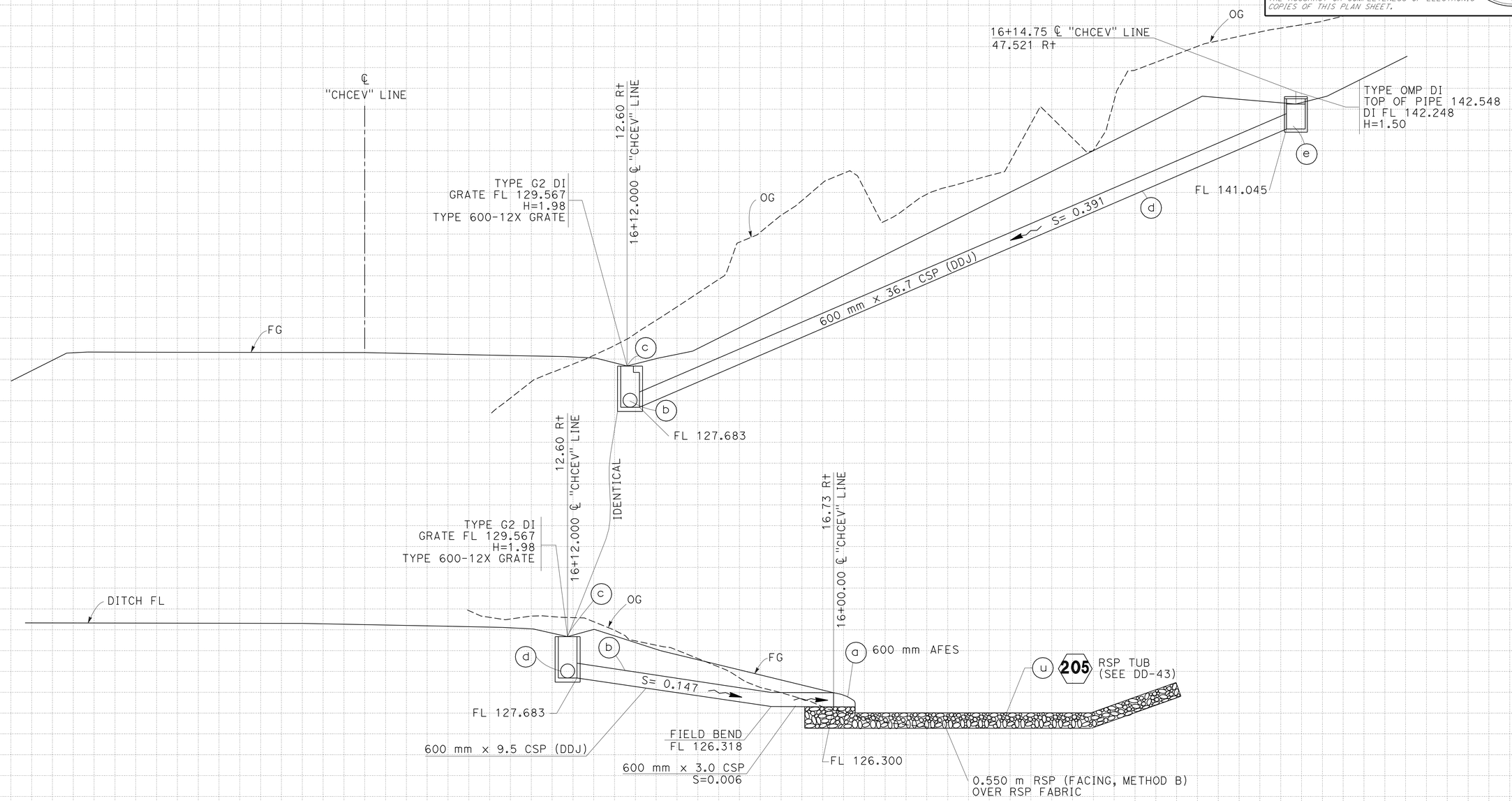

DRAINAGE SYSTEM No. 235

ALL DIMENSIONS ARE IN METERS
UNLESS OTHERWISE SHOWN

DRAINAGE PROFILE

SCALE Horiz 1:100
Vert 1:100

DP-175

REVISED BY | DATE REVISED
THUAN NGUYEN | ERIC OLSON
CALCULATED-DESIGNED BY | CHECKED BY
FUNCTIONAL SUPERVISOR **DAVID FRANKE**

STATE OF CALIFORNIA - DEPARTMENT OF TRANSPORTATION
Caltrans **06-DESIGN**

Station
m^3 Exc
Emb

LAST REVISION 05-10-10 | DATE PLOTTED => 02-AUG-2010 | TIME PLOTTED => 15:33

Dist	COUNTY	ROUTE	KILOMETER POST TOTAL PROJECT	SHEET No.	TOTAL SHEETS
05	Mon	101	R146.8/159.7	530	1402

Eric Olson 5-16-10
REGISTERED CIVIL ENGINEER DATE

7-26-10
PLANS APPROVAL DATE

REGISTERED PROFESSIONAL ENGINEER ERIC H. OLSON No. 60801 Exp. 12/31/10 CIVIL STATE OF CALIFORNIA

THE STATE OF CALIFORNIA OR ITS OFFICERS OR AGENTS SHALL NOT BE RESPONSIBLE FOR THE ACCURACY OR COMPLETENESS OF ELECTRONIC COPIES OF THIS PLAN SHEET.

Caltrans Metric

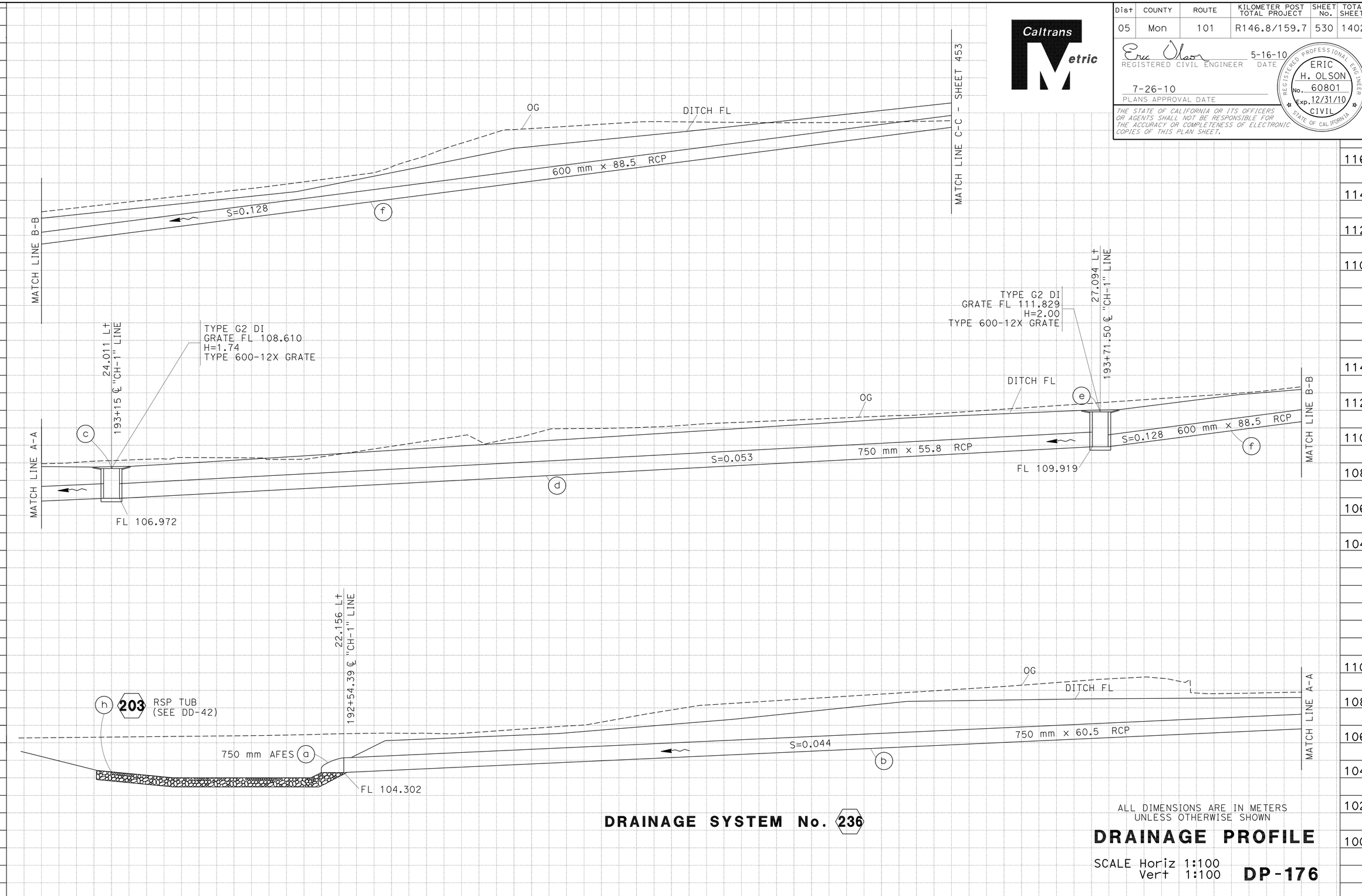

DRAINAGE SYSTEM No. 236

ALL DIMENSIONS ARE IN METERS
UNLESS OTHERWISE SHOWN

DRAINAGE PROFILE

SCALE Horiz 1:100
Vert 1:100

DP-176

Station	
m^3	Exc
	Emb

REVISED BY | DATE REVISED

THUAN NGUYEN | ERIC OLSON

CALCULATED-DESIGNED BY | CHECKED BY

FUNCTIONAL SUPERVISOR **DAVID FRANKE**

STATE OF CALIFORNIA - DEPARTMENT OF TRANSPORTATION **06-DESIGN**

Caltrans

LAST REVISION 05-10-10 | DATE PLOTTED => 02-AUG-2010 | TIME PLOTTED => 15:33

Dist	COUNTY	ROUTE	KILOMETER POST TOTAL PROJECT	SHEET No.	TOTAL SHEETS
05	Mon	101	R146.8/159.7	531	1402

Caltrans Metric

Eric Olson 5-16-10
REGISTERED CIVIL ENGINEER DATE

7-26-10
PLANS APPROVAL DATE

REGISTERED PROFESSIONAL ENGINEER ERIC H. OLSON No. 60801 Exp. 12/31/10 CIVIL STATE OF CALIFORNIA

THE STATE OF CALIFORNIA OR ITS OFFICERS OR AGENTS SHALL NOT BE RESPONSIBLE FOR THE ACCURACY OR COMPLETENESS OF ELECTRONIC COPIES OF THIS PLAN SHEET.

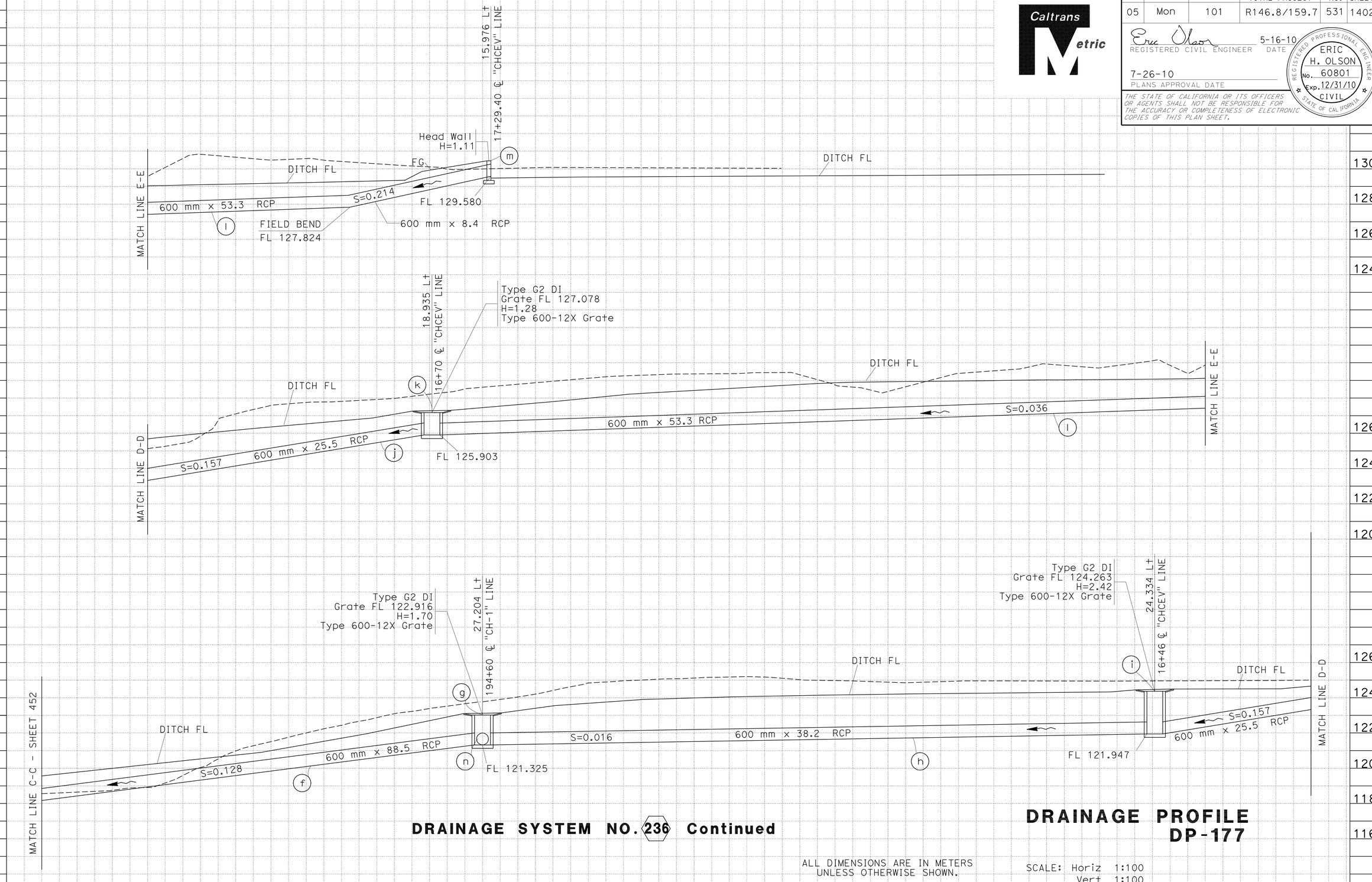

DRAINAGE SYSTEM NO. 236 Continued

DRAINAGE PROFILE DP-177

ALL DIMENSIONS ARE IN METERS UNLESS OTHERWISE SHOWN.

SCALE: Horiz 1:100
Vert 1:100

Station	
m^3	Exc
	Emb

REVISED BY | DATE REVISED

THUAN NGUYEN | ERIC OLSON

CALCULATED-DESIGNED BY | CHECKED BY

FUNCTIONAL SUPERVISOR **DAVID FRANKE**

STATE OF CALIFORNIA - DEPARTMENT OF TRANSPORTATION
Caltrans **06-DESIGN**

LAST REVISION 05-10-10 | DATE PLOTTED => 02-AUG-2010 | TIME PLOTTED => 13:13

Dist	COUNTY	ROUTE	KILOMETER POST TOTAL PROJECT	SHEET No.	TOTAL SHEETS
05	Mon	101	R146.8/159.7	532	1402

Eric Olson 5-16-10
REGISTERED CIVIL ENGINEER DATE

7-26-10
PLANS APPROVAL DATE

REGISTERED PROFESSIONAL ENGINEER ERIC H. OLSON No. 60801 Exp. 12/31/10 CIVIL STATE OF CALIFORNIA

THE STATE OF CALIFORNIA OR ITS OFFICERS OR AGENTS SHALL NOT BE RESPONSIBLE FOR THE ACCURACY OR COMPLETENESS OF ELECTRONIC COPIES OF THIS PLAN SHEET.

Caltrans Metric

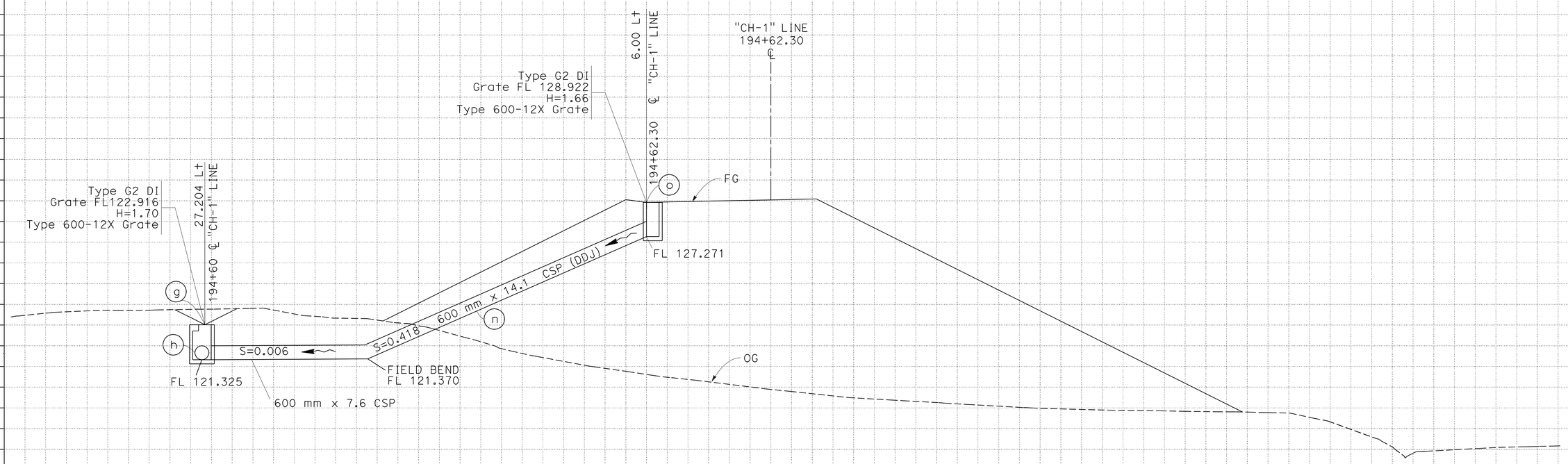

DRAINAGE SYSTEM NO. 236 Continued

DRAINAGE PROFILE
DP-178

ALL DIMENSIONS ARE IN METERS UNLESS OTHERWISE SHOWN.

SCALE: Horiz 1:100
Vert 1:100

Station	
m^3 Exc	
m^3 Emb	

STATE OF CALIFORNIA - DEPARTMENT OF TRANSPORTATION
Caltrans 06-DESIGN

FUNCTIONAL SUPERVISOR DAVID FRANKE
CALCULATED-DESIGNED BY THUAN NGUYEN
CHECKED BY ERIC OLSON
REVISED BY
DATE REVISED

LAST REVISION DATE PLOTTED => 02-AUG-2010
05-10-10 TIME PLOTTED => 13:13

Dist	COUNTY	ROUTE	KILOMETER POST TOTAL PROJECT	SHEET No.	TOTAL SHEETS
05	Mon	101	R146.8/159.7	533	1402

Caltrans Metric

Eric Olson 5-16-10
REGISTERED CIVIL ENGINEER DATE

7-26-10
PLANS APPROVAL DATE

REGISTERED PROFESSIONAL ENGINEER ERIC H. OLSON No. 60801 Exp. 12/31/10 CIVIL STATE OF CALIFORNIA

THE STATE OF CALIFORNIA OR ITS OFFICERS OR AGENTS SHALL NOT BE RESPONSIBLE FOR THE ACCURACY OR COMPLETENESS OF ELECTRONIC COPIES OF THIS PLAN SHEET.

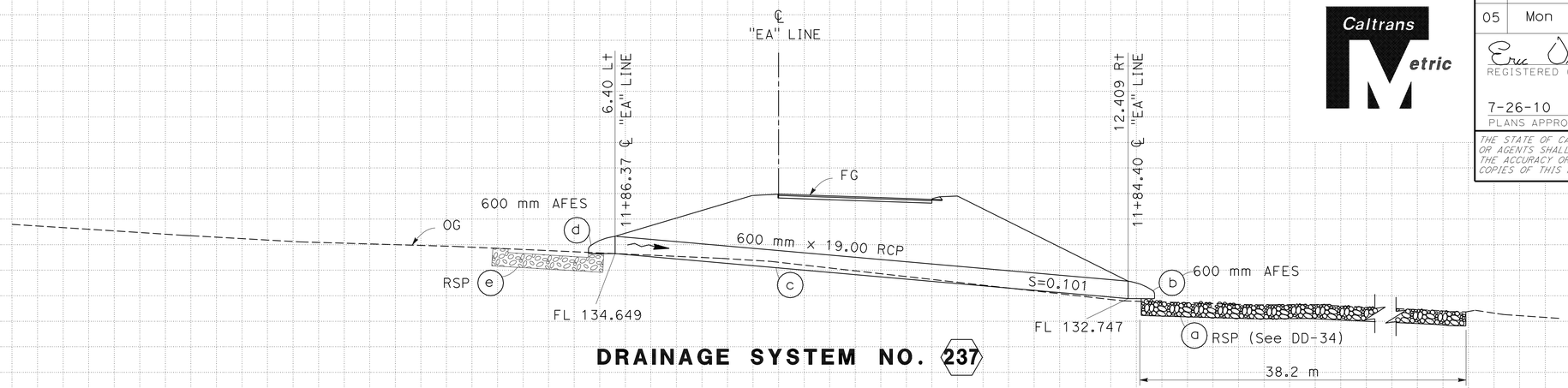

DRAINAGE SYSTEM NO. 237

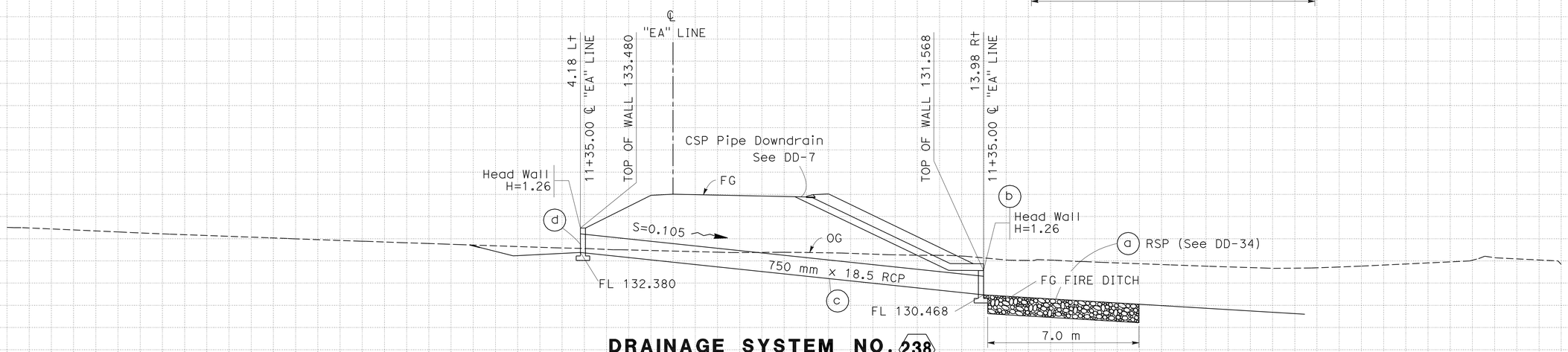

DRAINAGE SYSTEM NO. 238

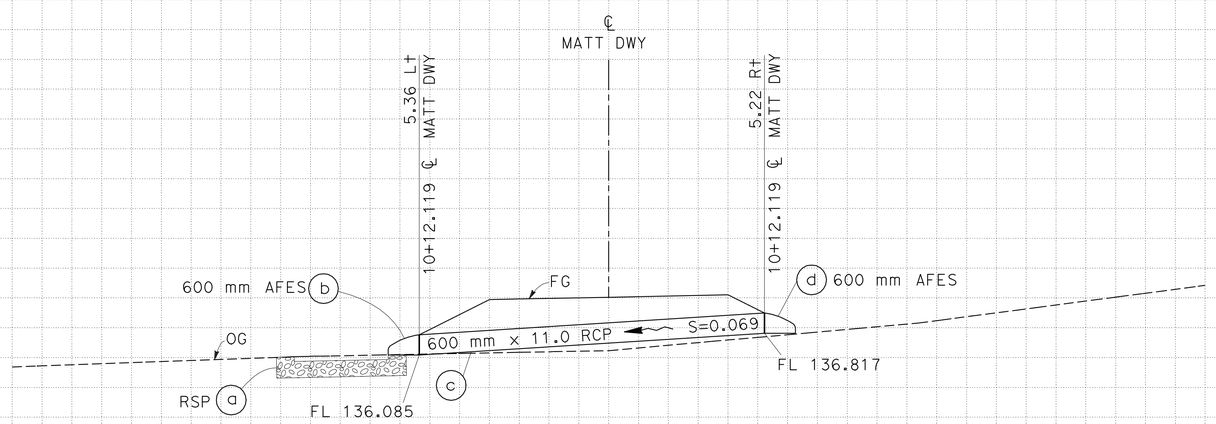

DRAINAGE SYSTEM NO. 239

ALL DIMENSIONS ARE IN METERS UNLESS OTHERWISE SHOWN.

SCALE: Horiz 1:100
Vert 1:100

DRAINAGE PROFILE
DP-179

REVISED BY	DATE REVISED
THUAN NGUYEN	ERIC OLSON

CALCULATED-DESIGNED BY / CHECKED BY

FUNCTIONAL SUPERVISOR: DAVID FRANKE

STATE OF CALIFORNIA - DEPARTMENT OF TRANSPORTATION
Caltrans 06-DESIGN

Station
m^3 Exc
Emb

LAST REVISION 05-10-10 | DATE PLOTTED => 02-AUG-2010 | TIME PLOTTED => 13:13

Dist	COUNTY	ROUTE	KILOMETER POST TOTAL PROJECT	SHEET No.	TOTAL SHEETS
05	Mon	101	R146.8/159.7	534	1402

Caltrans Metric

Eric Olson 5-16-10
REGISTERED CIVIL ENGINEER DATE

7-26-10
PLANS APPROVAL DATE

REGISTERED PROFESSIONAL ENGINEER ERIC H. OLSON No. 60801 Exp. 12/31/10 CIVIL STATE OF CALIFORNIA

THE STATE OF CALIFORNIA OR ITS OFFICERS OR AGENTS SHALL NOT BE RESPONSIBLE FOR THE ACCURACY OR COMPLETENESS OF ELECTRONIC COPIES OF THIS PLAN SHEET.

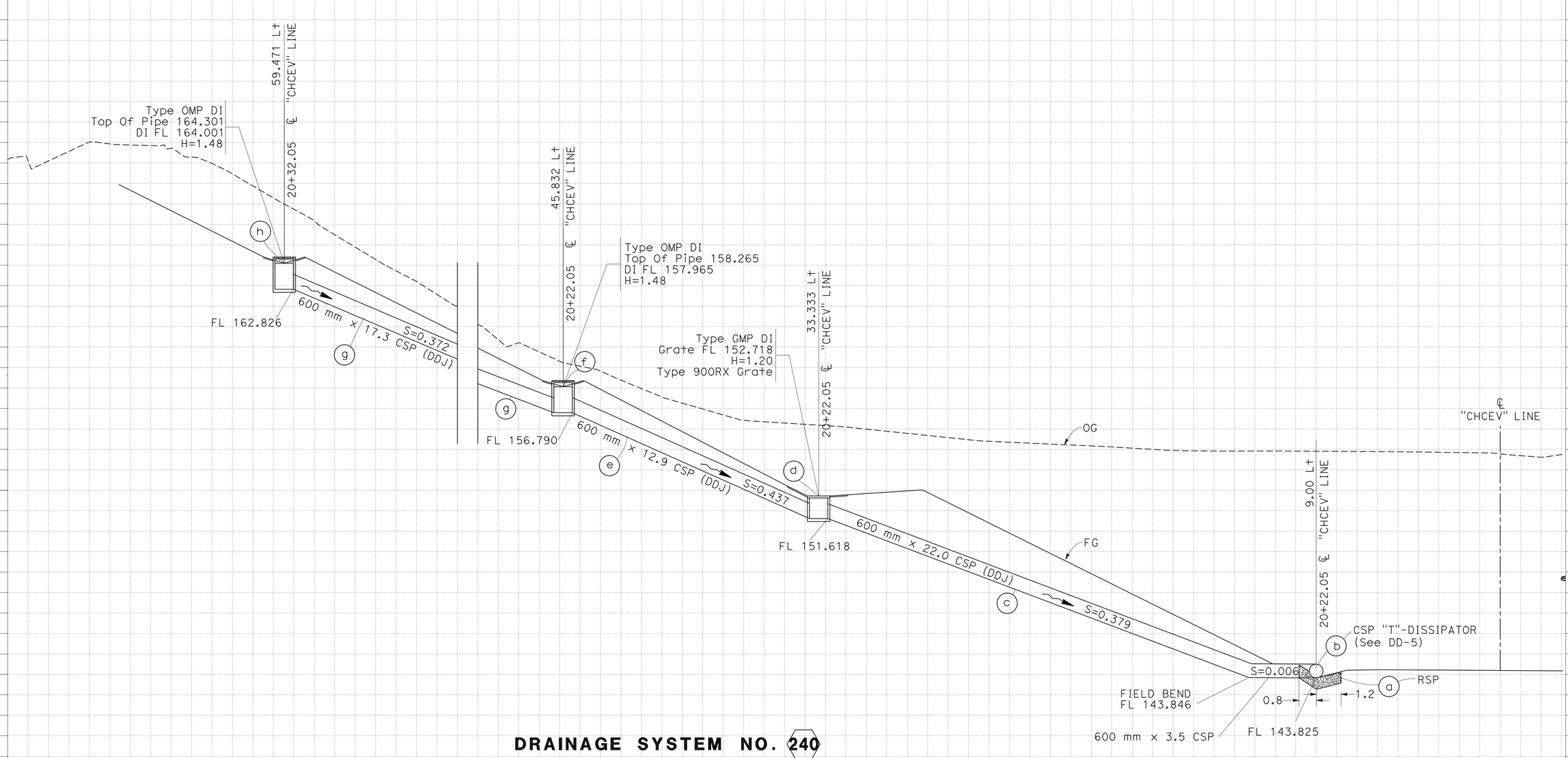

DRAINAGE SYSTEM NO. 240

ALL DIMENSIONS ARE IN METERS
UNLESS OTHERWISE SHOWN.

SCALE: Horiz 1:100
Vert 1:100

DRAINAGE PROFILE
DP-180

Station	
m^3	Exc
	Emb

STATE OF CALIFORNIA - DEPARTMENT OF TRANSPORTATION
Caltrans 06-DESIGN

FUNCTIONAL SUPERVISOR: DAVID FRANKE
CALCULATED-DESIGNED BY: KRIS LAKS
CHECKED BY: ERIC OLSON
REVISED BY
DATE REVISED

LAST REVISION 05-10-10
DATE PLOTTED => 02-AUG-2010
TIME PLOTTED => 13:13

Dist	COUNTY	ROUTE	KILOMETER POST TOTAL PROJECT	SHEET No.	TOTAL SHEETS
05	Mon	101	R146.8/159.7	535	1402

Eric Olson 5-16-10
REGISTERED CIVIL ENGINEER DATE

7-26-10
PLANS APPROVAL DATE

REGISTERED PROFESSIONAL ENGINEER ERIC H. OLSON No. 60801 Exp. 12/31/10 CIVIL STATE OF CALIFORNIA

THE STATE OF CALIFORNIA OR ITS OFFICERS OR AGENTS SHALL NOT BE RESPONSIBLE FOR THE ACCURACY OR COMPLETENESS OF ELECTRONIC COPIES OF THIS PLAN SHEET.

Caltrans Metric

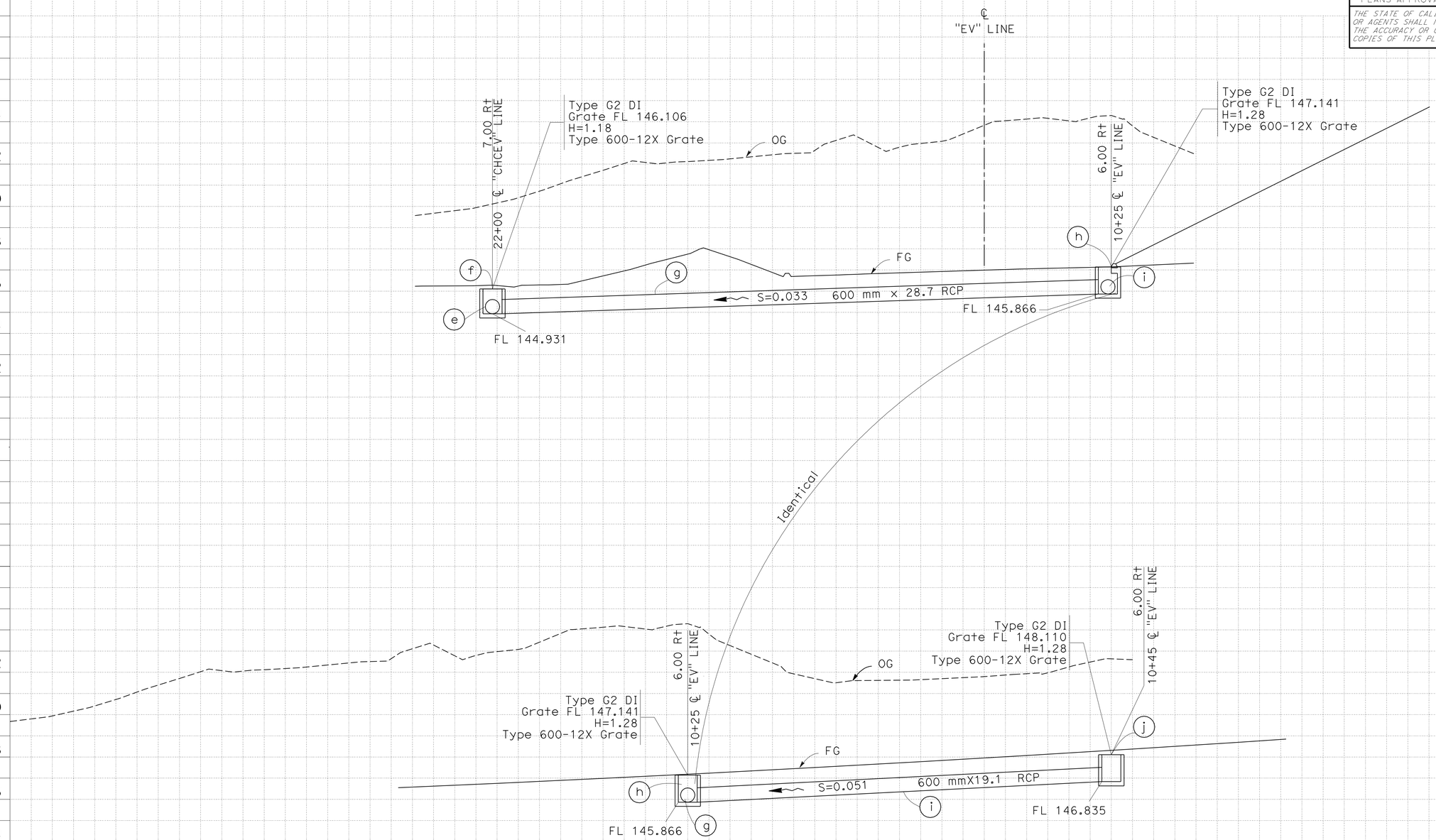

DRAINAGE SYSTEM NO. 241

ALL DIMENSIONS ARE IN METERS UNLESS OTHERWISE SHOWN.

DRAINAGE PROFILE DP-181

SCALE: Horiz 1:100
Vert 1:100

Station	
m^3 Exc	
m^3 Emb	

REVISED BY | DATE REVISED

KRIS LAKS | ERIC OLSON

CALCULATED-DESIGNED BY | CHECKED BY

FUNCTIONAL SUPERVISOR: DAVID FRANKE

STATE OF CALIFORNIA - DEPARTMENT OF TRANSPORTATION
Caltrans 06-DESIGN

LAST REVISION 05-10-10 | DATE PLOTTED => 02-AUG-2010 | TIME PLOTTED => 13:13

Dist	COUNTY	ROUTE	KILOMETER POST TOTAL PROJECT	SHEET No.	TOTAL SHEETS
05	Mon	101	R146.8/159.7	536	1402

Eric Olson 5-16-10
REGISTERED CIVIL ENGINEER DATE

7-26-10
PLANS APPROVAL DATE

REGISTERED PROFESSIONAL ENGINEER ERIC H. OLSON No. 60801 Exp. 12/31/10 CIVIL STATE OF CALIFORNIA

THE STATE OF CALIFORNIA OR ITS OFFICERS OR AGENTS SHALL NOT BE RESPONSIBLE FOR THE ACCURACY OR COMPLETENESS OF ELECTRONIC COPIES OF THIS PLAN SHEET.

Caltrans Metric

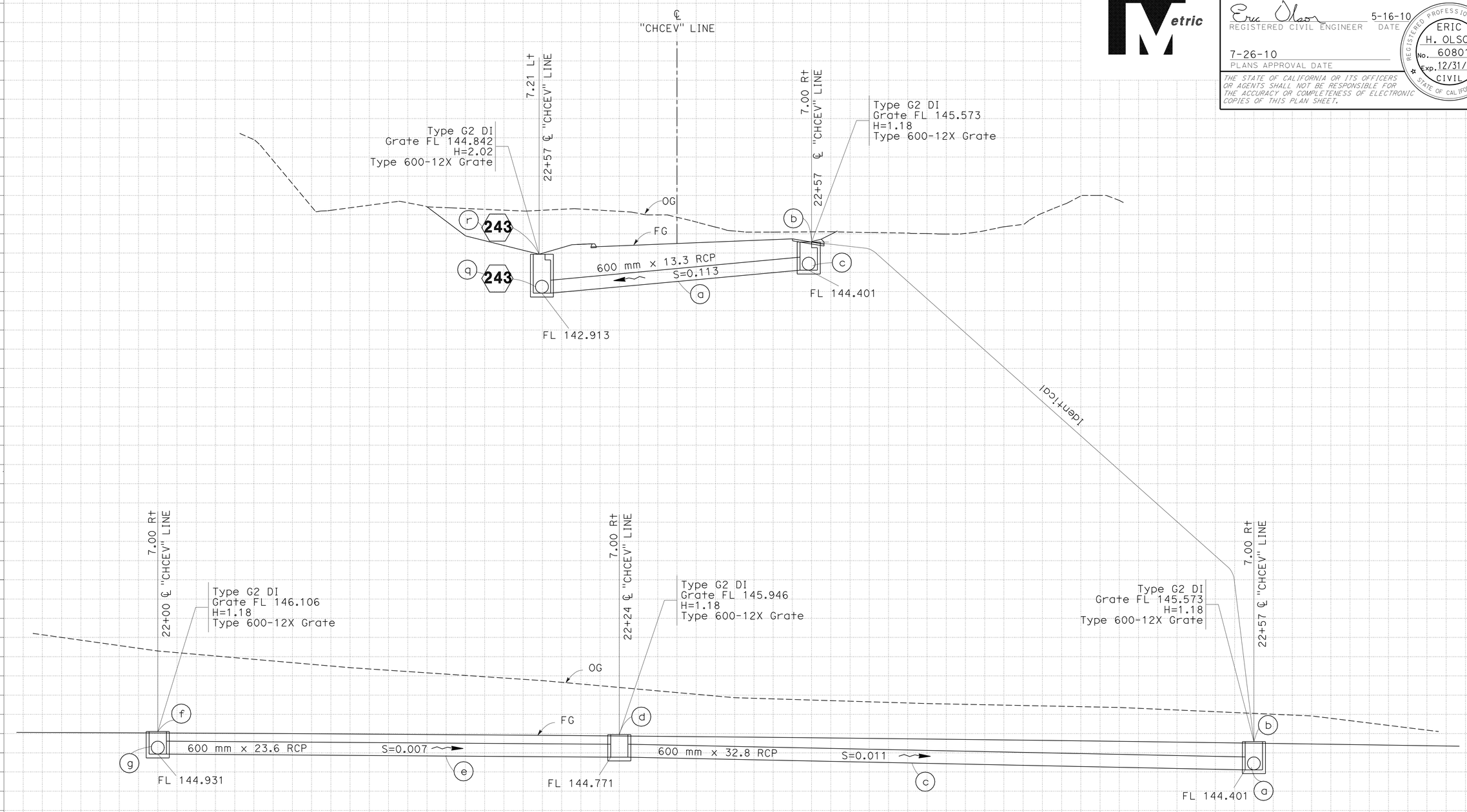

DRAINAGE SYSTEM NO. 241 Continued

ALL DIMENSIONS ARE IN METERS UNLESS OTHERWISE SHOWN.

DRAINAGE PROFILE DP-182

SCALE: Horiz 1:100
Vert 1:100

Station	
m^3 Exc	
m^3 Emb	

STATE OF CALIFORNIA - DEPARTMENT OF TRANSPORTATION
Caltrans 06-DESIGN

FUNCTIONAL SUPERVISOR DAVID FRANKE
CALCULATED-DESIGNED BY KRIS LAKS
CHECKED BY ERIC OLSON
REVISED BY
DATE REVISED

LAST REVISION 05-10-10 DATE PLOTTED => 02-AUG-2010 TIME PLOTTED => 13:13

Dist	COUNTY	ROUTE	KILOMETER POST TOTAL PROJECT	SHEET No.	TOTAL SHEETS
05	Mon	101	R146.8/159.7	537	1402

Caltrans Metric

Eric Olson 5-16-10
REGISTERED CIVIL ENGINEER DATE

7-26-10
PLANS APPROVAL DATE

REGISTERED PROFESSIONAL ENGINEER ERIC H. OLSON No. 60801 Exp. 12/31/10 CIVIL STATE OF CALIFORNIA

THE STATE OF CALIFORNIA OR ITS OFFICERS OR AGENTS SHALL NOT BE RESPONSIBLE FOR THE ACCURACY OR COMPLETENESS OF ELECTRONIC COPIES OF THIS PLAN SHEET.

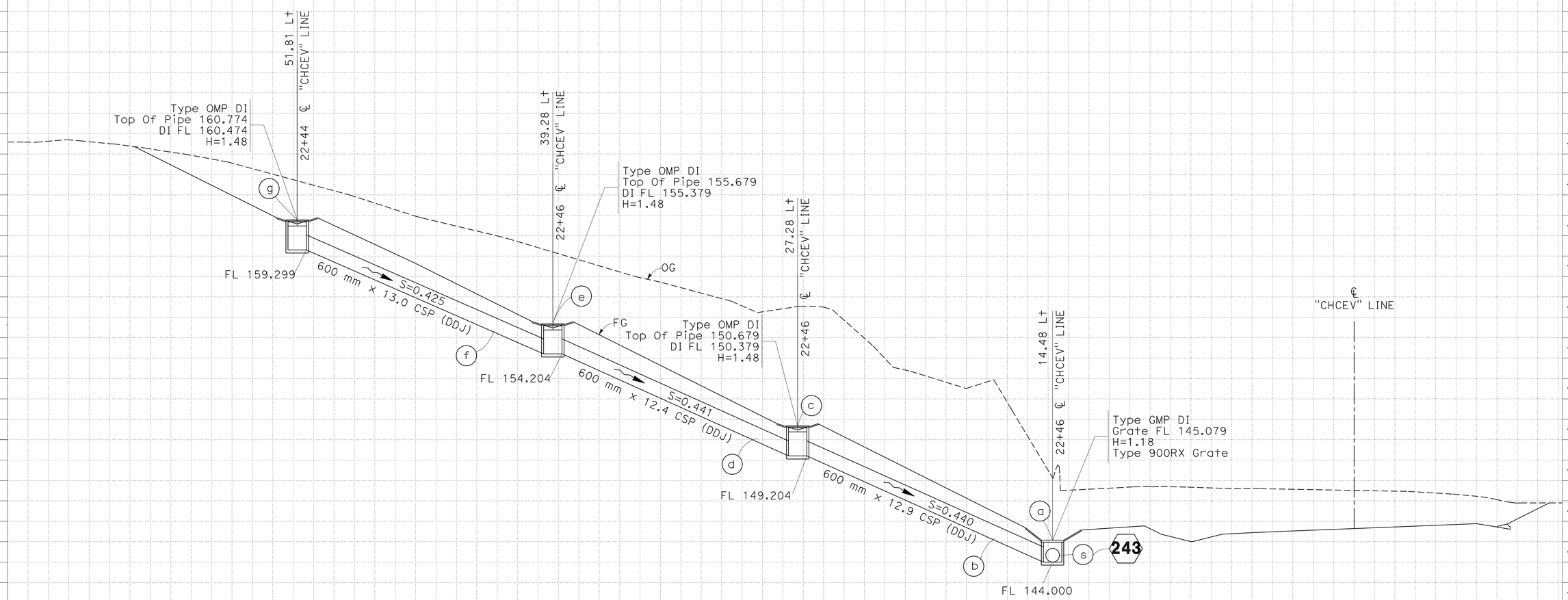

DRAINAGE SYSTEM NO. 242

DRAINAGE PROFILE
DP-183

ALL DIMENSIONS ARE IN METERS
UNLESS OTHERWISE SHOWN.

SCALE: Horiz 1:100
Vert 1:100

Station	
m^3 Exc	
m^3 Emb	

STATE OF CALIFORNIA - DEPARTMENT OF TRANSPORTATION
Caltrans 06-DESIGN

FUNCTIONAL SUPERVISOR DAVID FRANKE

CALCULATED-DESIGNED BY THUAN NGUYEN
CHECKED BY ERIC OLSON

REVISED BY
DATE REVISED

LAST REVISION DATE PLOTTED => 02-AUG-2010
TIME PLOTTED => 13:13
05-10-10

Dist	COUNTY	ROUTE	KILOMETER POST TOTAL PROJECT	SHEET No.	TOTAL SHEETS
05	Mon	101	R146.8/159.7	538	1402

Eric Olson 5-16-10
REGISTERED CIVIL ENGINEER DATE

7-26-10
PLANS APPROVAL DATE

REGISTERED PROFESSIONAL ENGINEER ERIC H. OLSON No. 60801 Exp. 12/31/10 CIVIL STATE OF CALIFORNIA

THE STATE OF CALIFORNIA OR ITS OFFICERS OR AGENTS SHALL NOT BE RESPONSIBLE FOR THE ACCURACY OR COMPLETENESS OF ELECTRONIC COPIES OF THIS PLAN SHEET.

Caltrans Metric

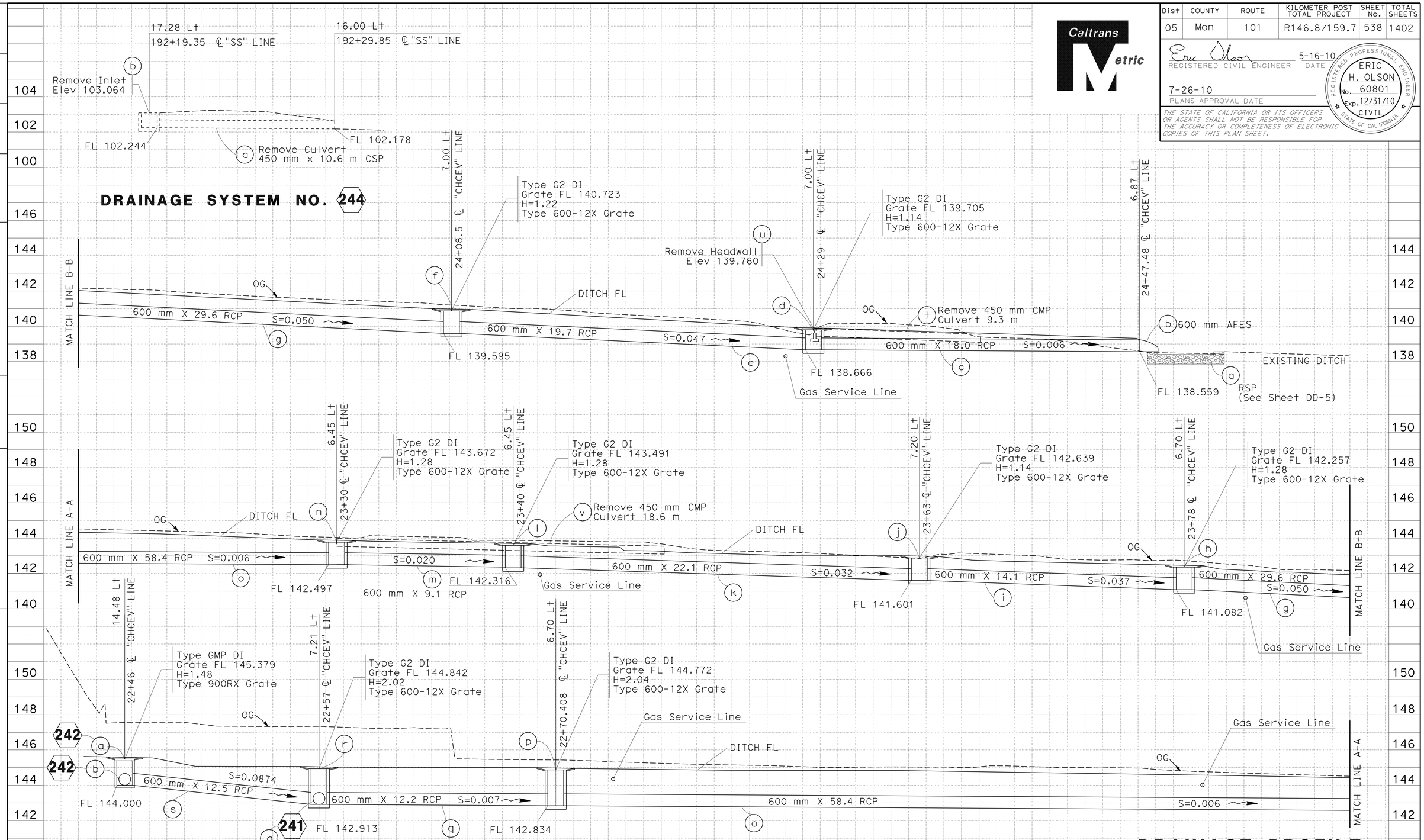

Station	
m^3	Exc
	Emb

STATE OF CALIFORNIA - DEPARTMENT OF TRANSPORTATION
Caltrans
06-DESIGN

FUNCTIONAL SUPERVISOR: DAVID FRANKE
CALCULATED-DESIGNED BY: ERIC OLSON
CHECKED BY: CARLOS BLANCAS
REVISED BY / DATE REVISED

LAST REVISION 05-10-10
DATE PLOTTED => 02-AUG-2010
TIME PLOTTED => 13:13

Dist	COUNTY	ROUTE	KILOMETER POST TOTAL PROJECT	SHEET No.	TOTAL SHEETS
05	Mon	101	R146.8/159.7	539	1402

DAN 5-16-10
REGISTERED CIVIL ENGINEER DATE

7-26-10
PLANS APPROVAL DATE

REGISTERED PROFESSIONAL ENGINEER DANIEL B. MASSA No. 59095 Exp. 6/30/11 CIVIL STATE OF CALIFORNIA

THE STATE OF CALIFORNIA OR ITS OFFICERS OR AGENTS SHALL NOT BE RESPONSIBLE FOR THE ACCURACY OR COMPLETENESS OF ELECTRONIC COPIES OF THIS PLAN SHEET.

Caltrans Metric

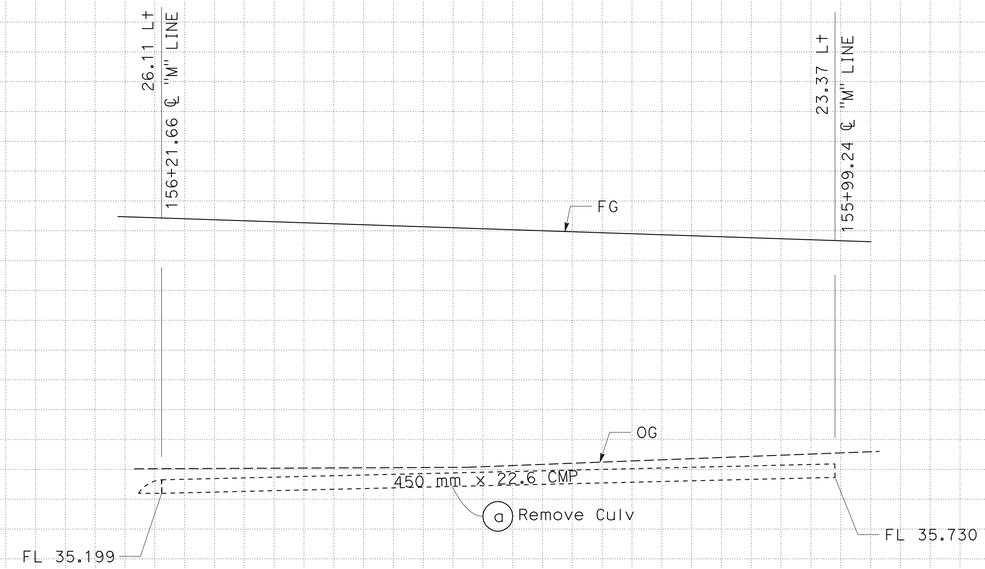

DRAINAGE SYSTEM No. 245

"M" LINE

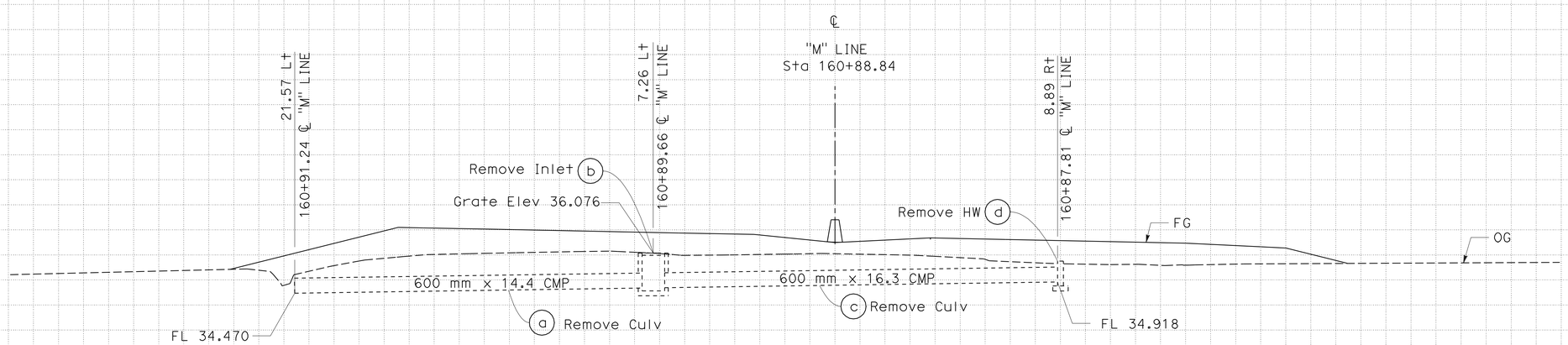

DRAINAGE SYSTEM No. 246

"M" LINE

ALL DIMENSIONS ARE IN METERS UNLESS OTHERWISE SHOWN.

DRAINAGE PROFILE DP-185

SCALE: Horiz 1:100
Vert 1:100

REVISED BY	D. MASSA
DATE REVISED	04/01/09
CALCULATED-DESIGNED BY	MICHAEL ZAMORA
CHECKED BY	DAN MASSA
FUNCTIONAL SUPERVISOR	DAVID FRANKE

STATE OF CALIFORNIA - DEPARTMENT OF TRANSPORTATION
Caltrans 06-DESIGN

Station
m^3 Exc
Emb

LAST REVISION 02-10-10 DATE PLOTTED => 02-AUG-2010 TIME PLOTTED => 13:13

Dist	COUNTY	ROUTE	KILOMETER POST TOTAL PROJECT	SHEET No.	TOTAL SHEETS
05	Mon	101	R146.8/159.7	540	1402

REGISTERED CIVIL ENGINEER 5-16-10 DATE

7-26-10
PLANS APPROVAL DATE

REGISTERED PROFESSIONAL ENGINEER DANIEL B. MASSA No. 59095 Exp. 6/30/11 CIVIL STATE OF CALIFORNIA

THE STATE OF CALIFORNIA OR ITS OFFICERS OR AGENTS SHALL NOT BE RESPONSIBLE FOR THE ACCURACY OR COMPLETENESS OF ELECTRONIC COPIES OF THIS PLAN SHEET.

Caltrans Metric

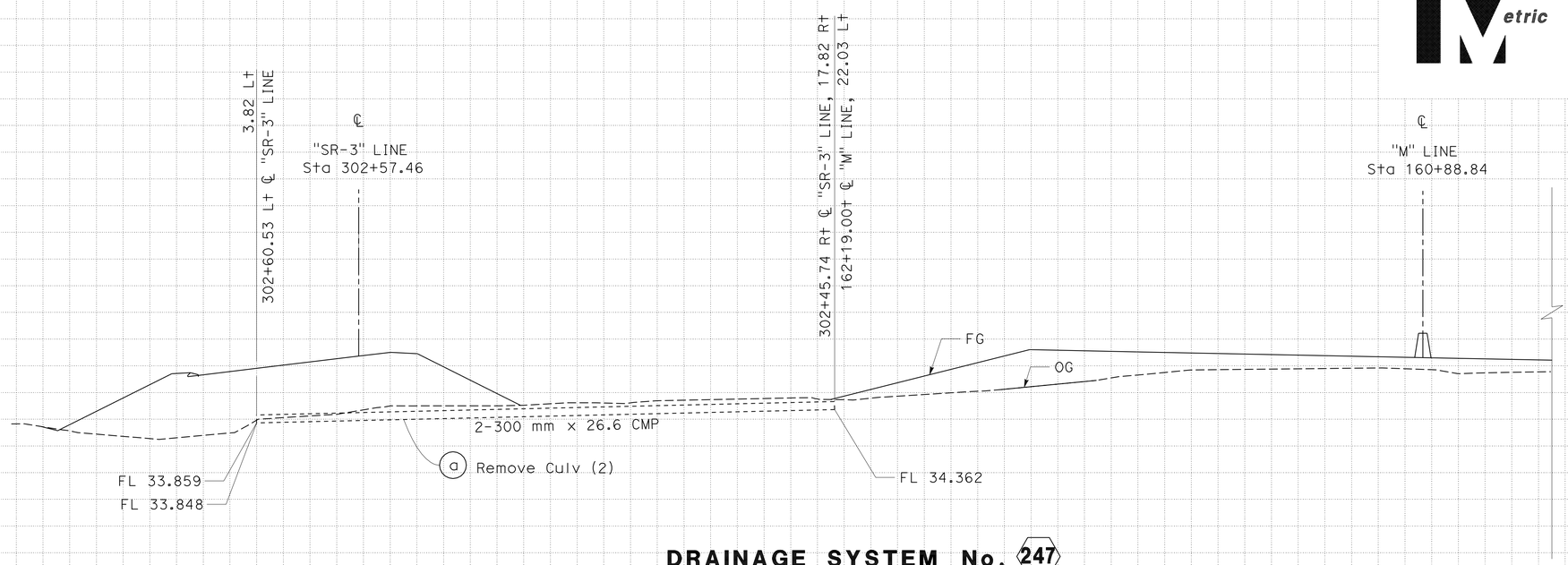

DRAINAGE SYSTEM No. 247

"SR-3" LINE

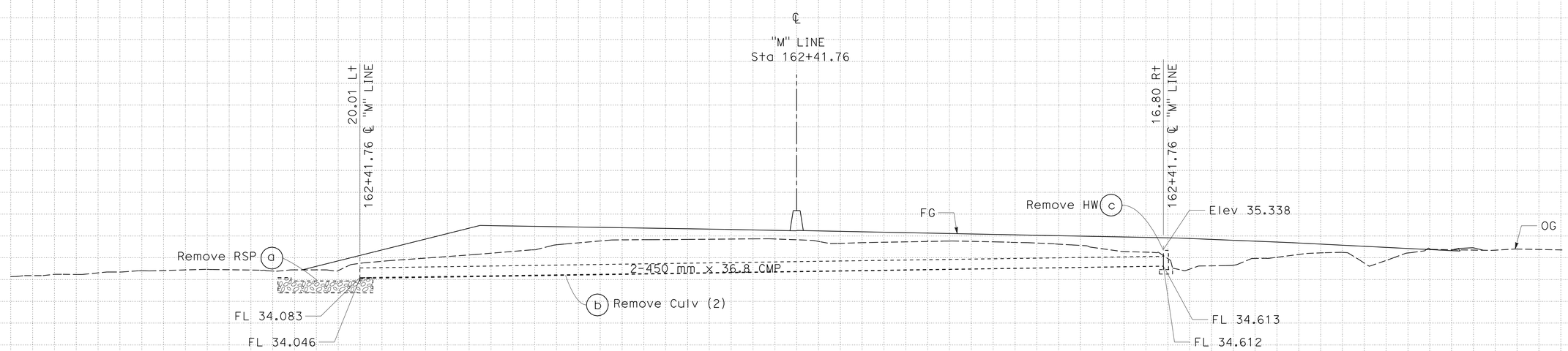

DRAINAGE SYSTEM No. 248

"M" LINE

DRAINAGE PROFILE
DP-186

ALL DIMENSIONS ARE IN METERS UNLESS OTHERWISE SHOWN.

SCALE: Horiz 1:100
Vert 1:100

Station	
m^3 Exc	
m^3 Emb	

STATE OF CALIFORNIA - DEPARTMENT OF TRANSPORTATION
Caltrans
06-DESIGN

FUNCTIONAL SUPERVISOR: DAVID FRANKE

CALCULATED-DESIGNED BY: MICHAEL ZAMORA
CHECKED BY: DAN MASSA

REVISED BY: D. MASSA
DATE REVISED: 04/01/09

LAST REVISION 02-16-10 DATE PLOTTED => 02-AUG-2010 TIME PLOTTED => 13:13

Dist	COUNTY	ROUTE	KILOMETER POST TOTAL PROJECT	SHEET No.	TOTAL SHEETS
05	Mon	101	R146.8/159.7	541	1402

Caltrans Metric

DAN 5-16-10
REGISTERED CIVIL ENGINEER DATE

7-26-10
PLANS APPROVAL DATE

REGISTERED PROFESSIONAL ENGINEER DANIEL B. MASSA No. 59095 Exp. 6/30/11 CIVIL STATE OF CALIFORNIA

THE STATE OF CALIFORNIA OR ITS OFFICERS OR AGENTS SHALL NOT BE RESPONSIBLE FOR THE ACCURACY OR COMPLETENESS OF ELECTRONIC COPIES OF THIS PLAN SHEET.

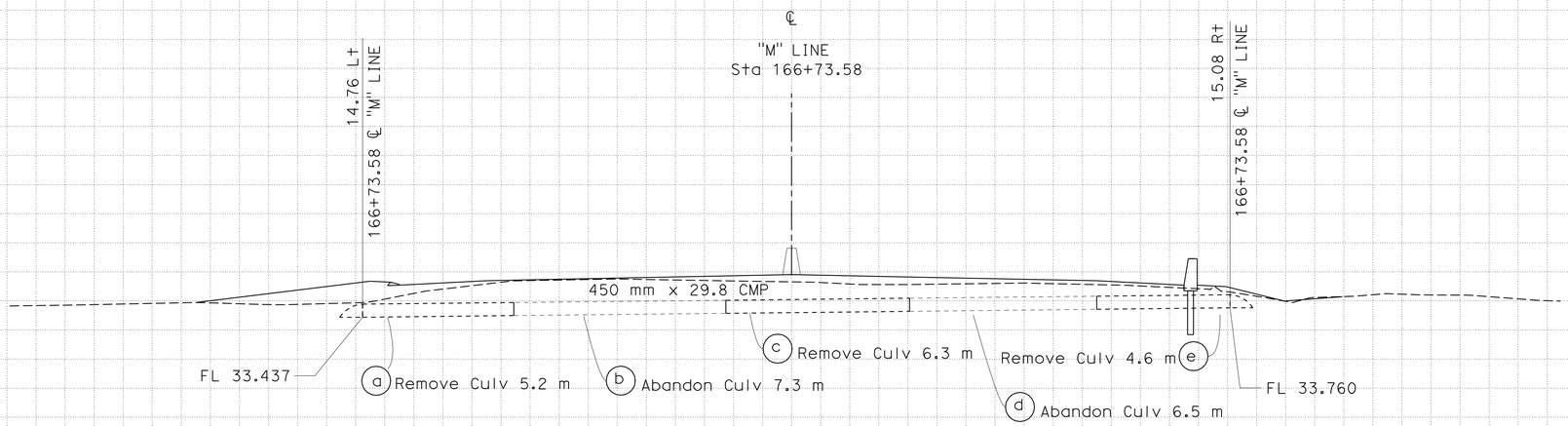

DRAINAGE SYSTEM No. 249

"M" LINE

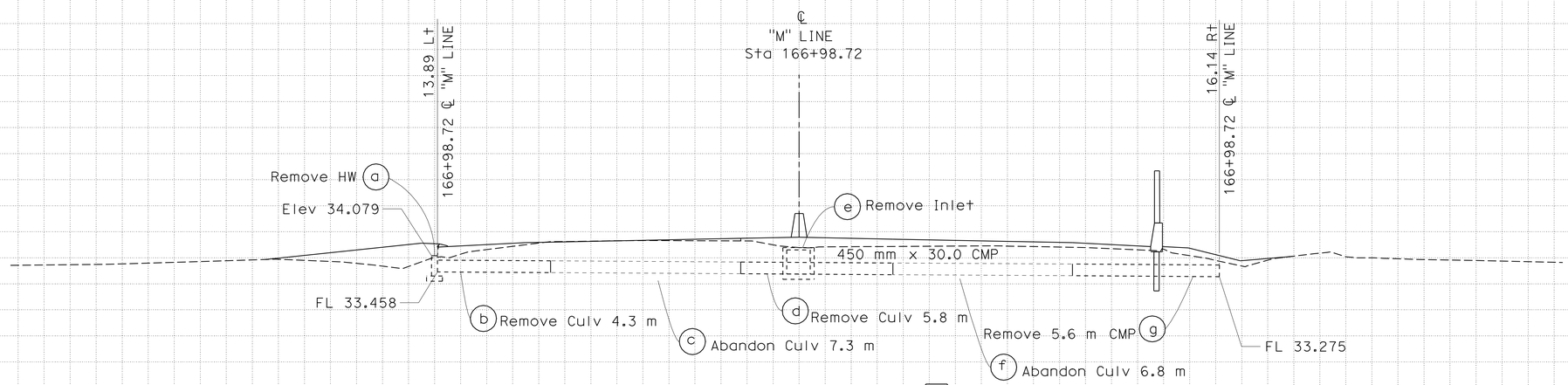

DRAINAGE SYSTEM No. 250

"M" LINE

ALL DIMENSIONS ARE IN METERS UNLESS OTHERWISE SHOWN.

DRAINAGE PROFILE DP-187

SCALE: Horiz 1:100
Vert 1:100

Station	
m^3	Exc
	Emb

FUNCTIONAL SUPERVISOR: DAVID FRANKE
CALCULATED-DESIGNED BY: MICHAEL ZAMORA
CHECKED BY: DAN MASSA
REVISED BY: D. MASSA
DATE REVISED: 04/01/09

STATE OF CALIFORNIA - DEPARTMENT OF TRANSPORTATION
Caltrans
06-DESIGN

LAST REVISION 02-16-10
DATE PLOTTED => 02-AUG-2010
TIME PLOTTED => 13:14

Dist	COUNTY	ROUTE	KILOMETER POST TOTAL PROJECT	SHEET No.	TOTAL SHEETS
05	Mon	101	R146.8/159.7	542	1402

Caltrans Metric

DAN 5-16-10
REGISTERED CIVIL ENGINEER DATE

7-26-10
PLANS APPROVAL DATE

REGISTERED PROFESSIONAL ENGINEER DANIEL B. MASSA No. 59095 Exp. 6/30/11 CIVIL STATE OF CALIFORNIA

THE STATE OF CALIFORNIA OR ITS OFFICERS OR AGENTS SHALL NOT BE RESPONSIBLE FOR THE ACCURACY OR COMPLETENESS OF ELECTRONIC COPIES OF THIS PLAN SHEET.

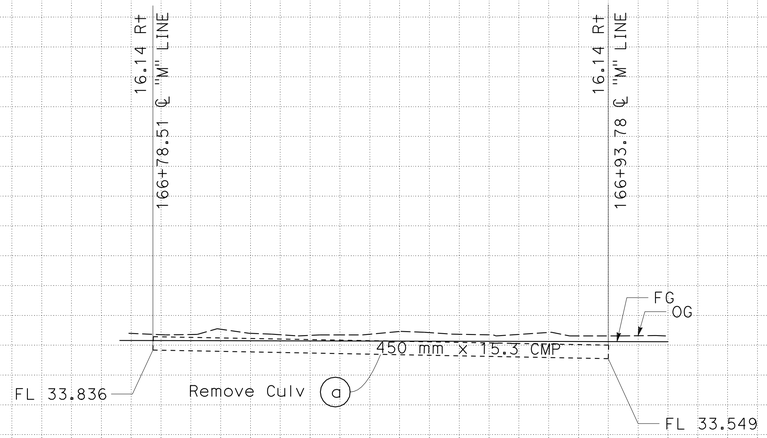

DRAINAGE SYSTEM No. 251

"M" LINE

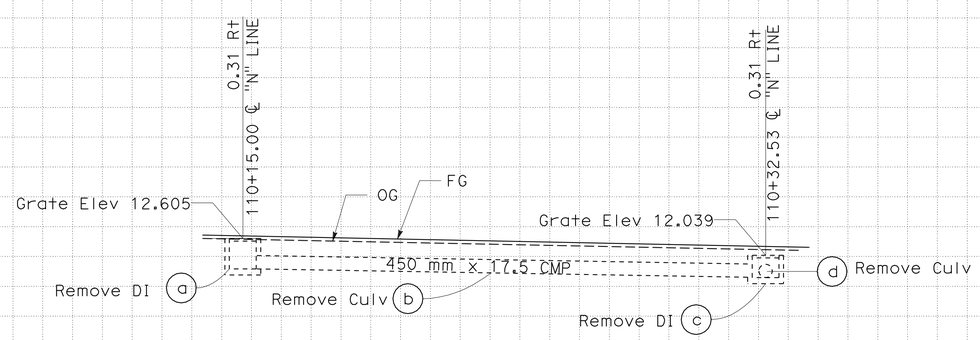

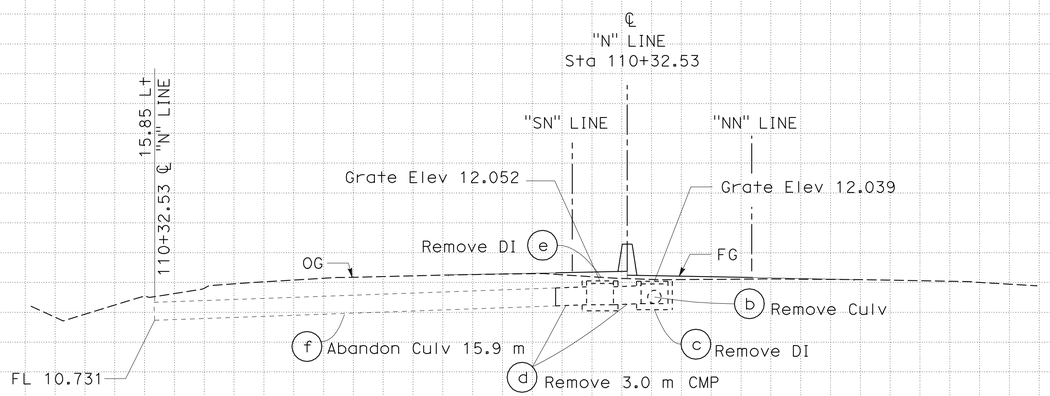

DRAINAGE SYSTEM No. 252

"N" LINE

ALL DIMENSIONS ARE IN METERS UNLESS OTHERWISE SHOWN.

DRAINAGE PROFILE DP-188

SCALE: Horiz 1:100
Vert 1:100

Station	
m^3 Exc	
m^3 Emb	

STATE OF CALIFORNIA - DEPARTMENT OF TRANSPORTATION
Caltrans
06-DESIGN

FUNCTIONAL SUPERVISOR: DAVID FRANKE
CALCULATED-DESIGNED BY: MICHAEL ZAMORA
CHECKED BY: DAN MASSA
REVISED BY: D. MASSA
DATE REVISED: 04/01/09

LAST REVISION 05-11-10 DATE PLOTTED => 02-AUG-2010 TIME PLOTTED => 13:14

Dist	COUNTY	ROUTE	KILOMETER POST TOTAL PROJECT	SHEET No.	TOTAL SHEETS
05	Mon	101	R146.8/159.7	543	1402

REGISTERED CIVIL ENGINEER — DATE 5-16-10

7-26-10
PLANS APPROVAL DATE

REGISTERED PROFESSIONAL ENGINEER — DANIEL B. MASSA — No. 59095 — Exp. 6/30/11 — CIVIL — STATE OF CALIFORNIA

THE STATE OF CALIFORNIA OR ITS OFFICERS OR AGENTS SHALL NOT BE RESPONSIBLE FOR THE ACCURACY OR COMPLETENESS OF ELECTRONIC COPIES OF THIS PLAN SHEET.

Caltrans Metric

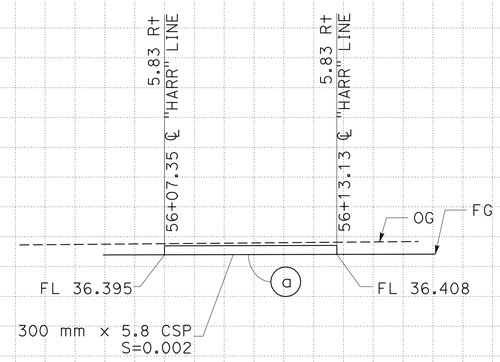

DRAINAGE SYSTEM No. 253

"HARR" LINE

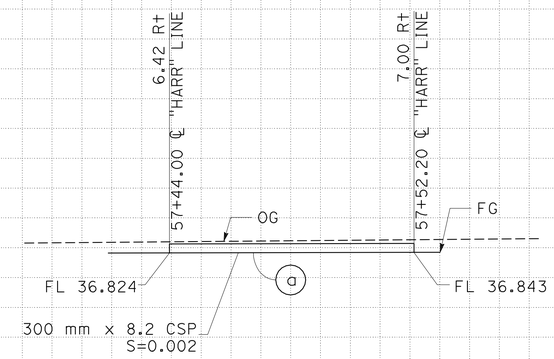

DRAINAGE SYSTEM No. 254

"HARR" LINE

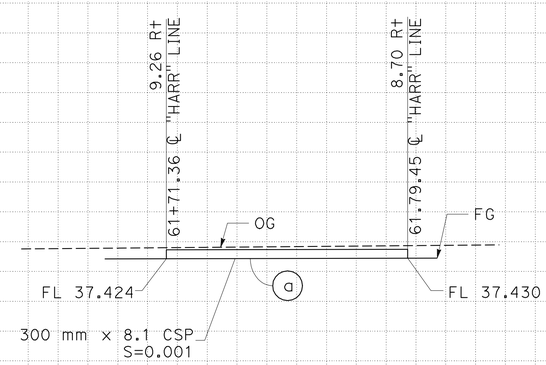

DRAINAGE SYSTEM No. 255

"N" LINE

ALL DIMENSIONS ARE IN METERS UNLESS OTHERWISE SHOWN.

DRAINAGE PROFILE DP-189

SCALE: Horiz 1:100
Vert 1:100

Station	
m^3 Exc	
m^3 Emb	

STATE OF CALIFORNIA - DEPARTMENT OF TRANSPORTATION
Caltrans 06-DESIGN

FUNCTIONAL SUPERVISOR: DAVID FRANKE
CALCULATED-DESIGNED BY: MICHAEL ZAMORA
CHECKED BY: DAN MASSA
REVISED BY: D. MASSA
DATE REVISED: 04/01/09

LAST REVISION DATE PLOTTED => 02-AUG-2010
05-15-10 TIME PLOTTED => 13:14

Dist	COUNTY	ROUTE	KILOMETER POST TOTAL PROJECT	SHEET No.	TOTAL SHEETS
05	Mon	101	R146.8/159.7	544	1402

Caltrans Metric

Ronnie K. Kier 5-16-10
REGISTERED CIVIL ENGINEER DATE

7-26-10
PLANS APPROVAL DATE

REGISTERED PROFESSIONAL ENGINEER RONNIE K. KIER No. C60877 Exp. 12/31/11 CIVIL STATE OF CALIFORNIA

THE STATE OF CALIFORNIA OR ITS OFFICERS OR AGENTS SHALL NOT BE RESPONSIBLE FOR THE ACCURACY OR COMPLETENESS OF ELECTRONIC COPIES OF THIS PLAN SHEET.

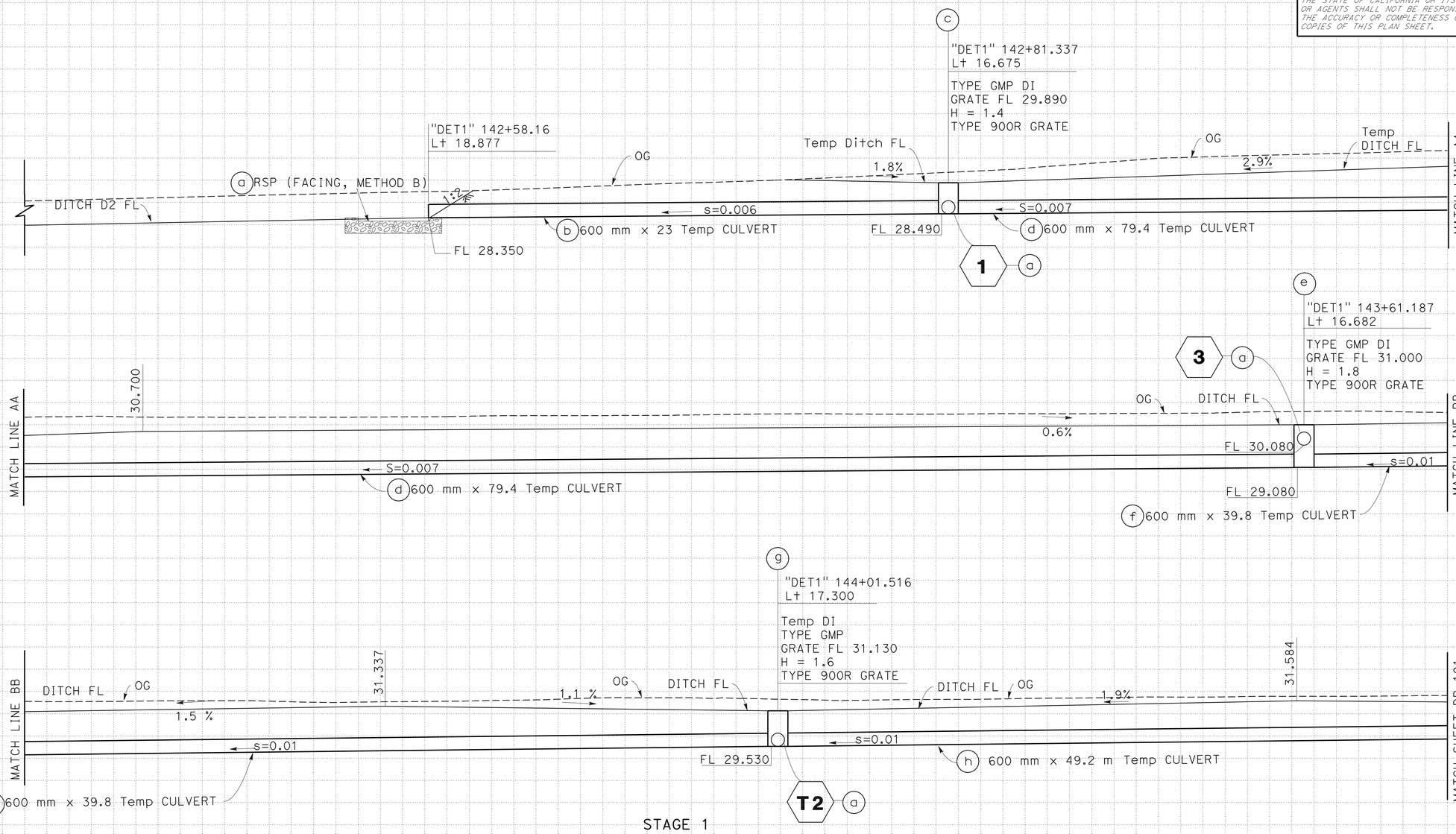

STAGE 1

TEMPORARY DRAINAGE SYSTEM No. T1

ALL DIMENSIONS ARE IN METERS UNLESS OTHERWISE SHOWN

SCALE: Horiz 1:100
Vert 1:100

DRAINAGE PROFILE (TEMPORARY CULVERT)

DP-190

REVISED BY | DATE REVISED
PETER CHANDER | RONNIE KIER
CALCULATED-DESIGNED BY | CHECKED BY
FUNCTIONAL SUPERVISOR **DAVID FRANKE**
STATE OF CALIFORNIA - DEPARTMENT OF TRANSPORTATION
Caltrans **06-DESIGN**

Station
m³ Exc
Emb

LAST REVISION 05-07-10 | DATE PLOTTED => 02-AUG-2010 | TIME PLOTTED => 13:14

Dist	COUNTY	ROUTE	KILOMETER POST TOTAL PROJECT	SHEET No.	TOTAL SHEETS
05	Mon	101	R146.8/159.7	545	1402

Ronnie K. Kier 5-16-10
REGISTERED CIVIL ENGINEER DATE

7-26-10
PLANS APPROVAL DATE

REGISTERED PROFESSIONAL ENGINEER RONNIE K. KIER No. C60877 Exp. 12/31/11 CIVIL STATE OF CALIFORNIA

THE STATE OF CALIFORNIA OR ITS OFFICERS OR AGENTS SHALL NOT BE RESPONSIBLE FOR THE ACCURACY OR COMPLETENESS OF ELECTRONIC COPIES OF THIS PLAN SHEET.

Caltrans Metric

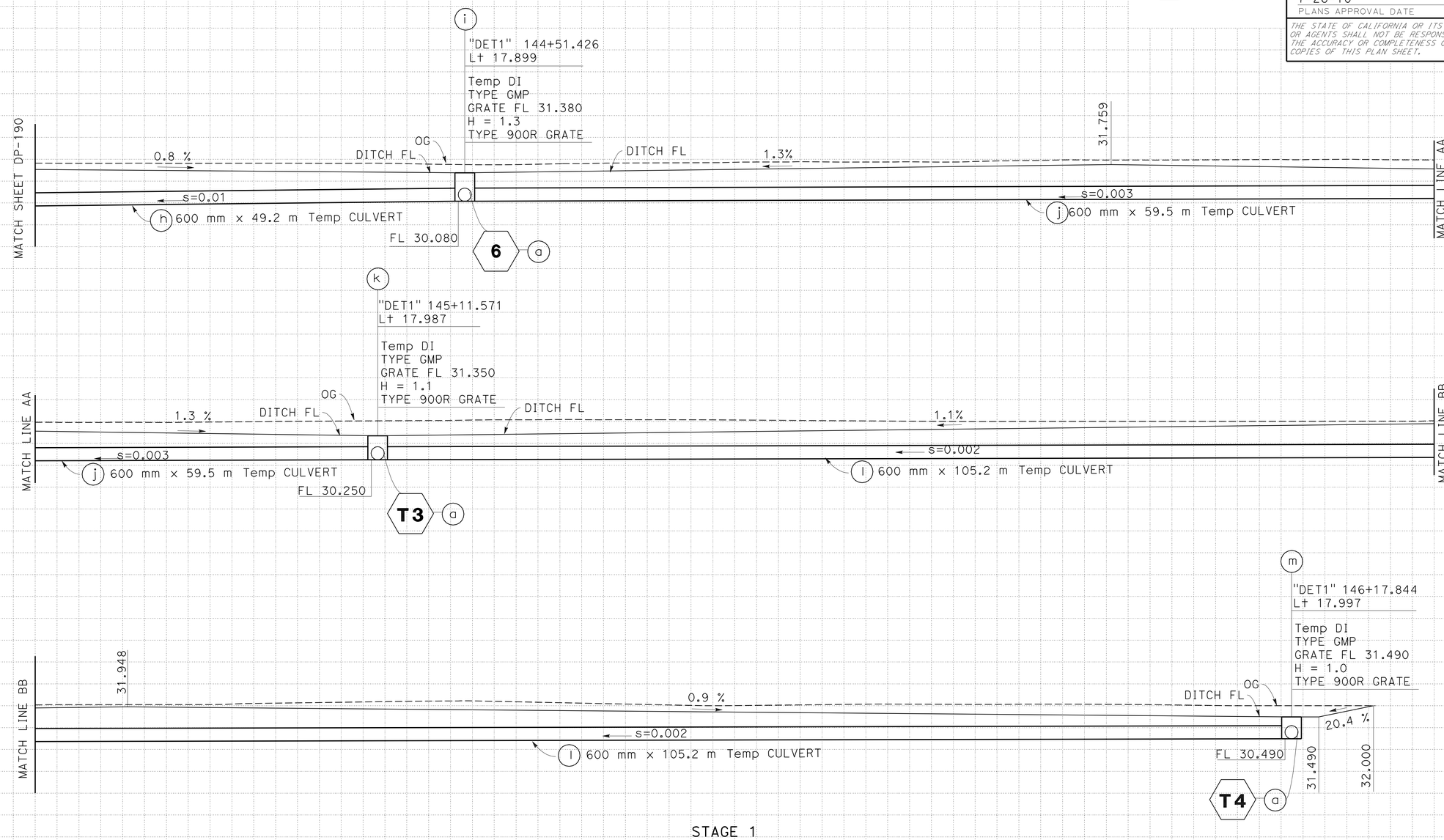

STAGE 1

TEMPORARY DRAINAGE SYSTEM No. T1 CONTINUED

ALL DIMENSIONS ARE IN METERS UNLESS OTHERWISE SHOWN

SCALE: Horiz 1:100
Vert 1:100

DRAINAGE PROFILE (TEMPORARY CULVERT)

DP-191

REVISED BY	DATE REVISED

CALCULATED-DESIGNED BY: PETER CHANDER
CHECKED BY: RONNIE KIER
FUNCTIONAL SUPERVISOR: DAVID FRANKE

STATE OF CALIFORNIA - DEPARTMENT OF TRANSPORTATION
Caltrans 06-DESIGN

Station
m³ Exc
Emb

LAST REVISION 05-07-10
DATE PLOTTED => 02-AUG-2010
TIME PLOTTED => 13:14

Dist	COUNTY	ROUTE	KILOMETER POST TOTAL PROJECT	SHEET No.	TOTAL SHEETS
05	Mon	101	R146.8/159.7	546	1402

Ronnie K. Kier 5-16-10
REGISTERED CIVIL ENGINEER DATE

7-26-10
PLANS APPROVAL DATE

REGISTERED PROFESSIONAL ENGINEER RONNIE K. KIER No. C60877 Exp. 12/31/11 CIVIL STATE OF CALIFORNIA

THE STATE OF CALIFORNIA OR ITS OFFICERS OR AGENTS SHALL NOT BE RESPONSIBLE FOR THE ACCURACY OR COMPLETENESS OF ELECTRONIC COPIES OF THIS PLAN SHEET.

Caltrans Metric

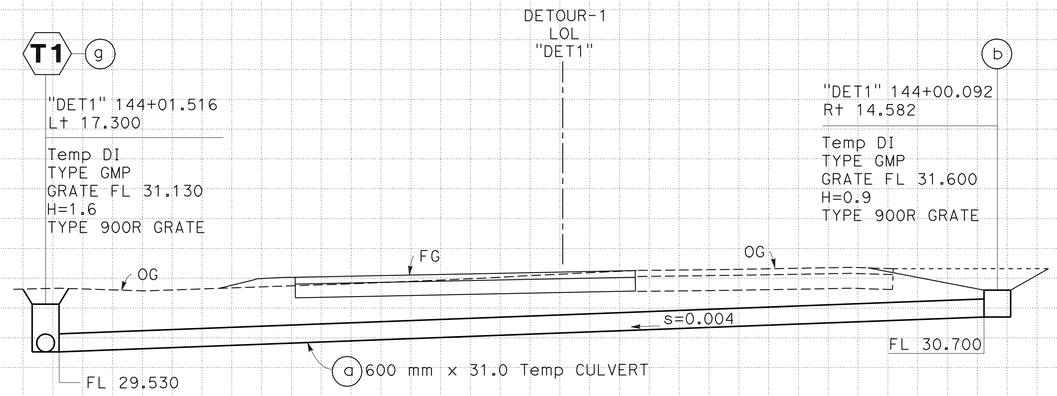

STAGE - 2

TEMPORARY DRAINAGE SYSTEM No. T2

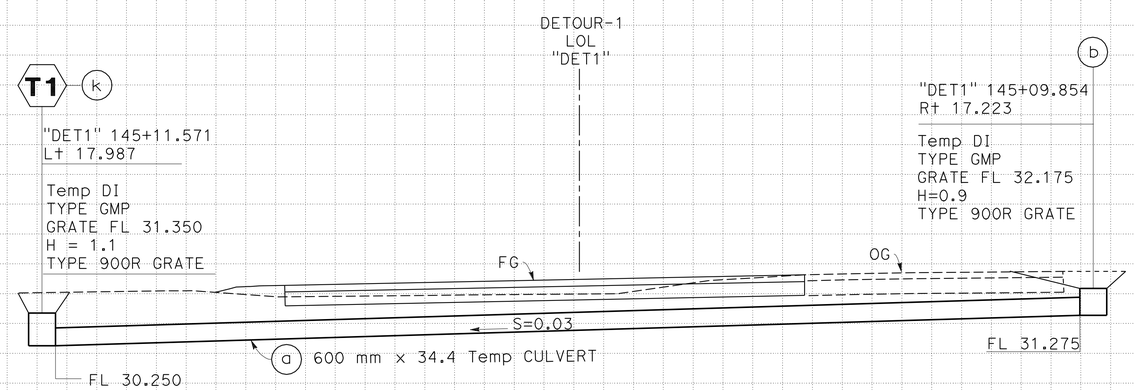

STAGE - 2

TEMPORARY DRAINAGE SYSTEM No. T3

ALL DIMENSIONS ARE IN METERS UNLESS OTHERWISE SHOWN

SCALE: Horiz 1:100
Vert 1:100

DRAINAGE PROFILE (TEMPORARY CULVERT)

DP-192

Station	
m^3 Exc	
m^3 Emb	

REVISED BY / DATE REVISED

PETER CHANDER / RONNIE KIER

CALCULATED-DESIGNED BY / CHECKED BY

FUNCTIONAL SUPERVISOR: DAVID FRANKE

STATE OF CALIFORNIA - DEPARTMENT OF TRANSPORTATION
06-DESIGN
Caltrans

LAST REVISION 05-07-10 DATE PLOTTED => 02-AUG-2010 TIME PLOTTED => 13:14

Dist	COUNTY	ROUTE	KILOMETER POST TOTAL PROJECT	SHEET No.	TOTAL SHEETS
05	Mon	101	R146.8/159.7	547	1402

Ronnie K. Kier 5-16-10
REGISTERED CIVIL ENGINEER DATE

7-26-10
PLANS APPROVAL DATE

REGISTERED PROFESSIONAL ENGINEER RONNIE K. KIER No. C60877 Exp. 12/31/11 CIVIL STATE OF CALIFORNIA

THE STATE OF CALIFORNIA OR ITS OFFICERS OR AGENTS SHALL NOT BE RESPONSIBLE FOR THE ACCURACY OR COMPLETENESS OF ELECTRONIC COPIES OF THIS PLAN SHEET.

Caltrans Metric

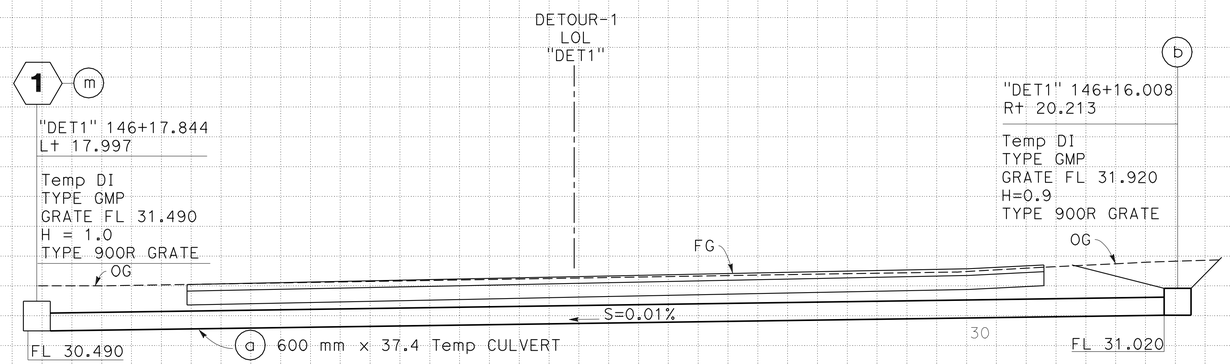

STAGE - 2

TEMPORARY DRAINAGE SYSTEM No. T4

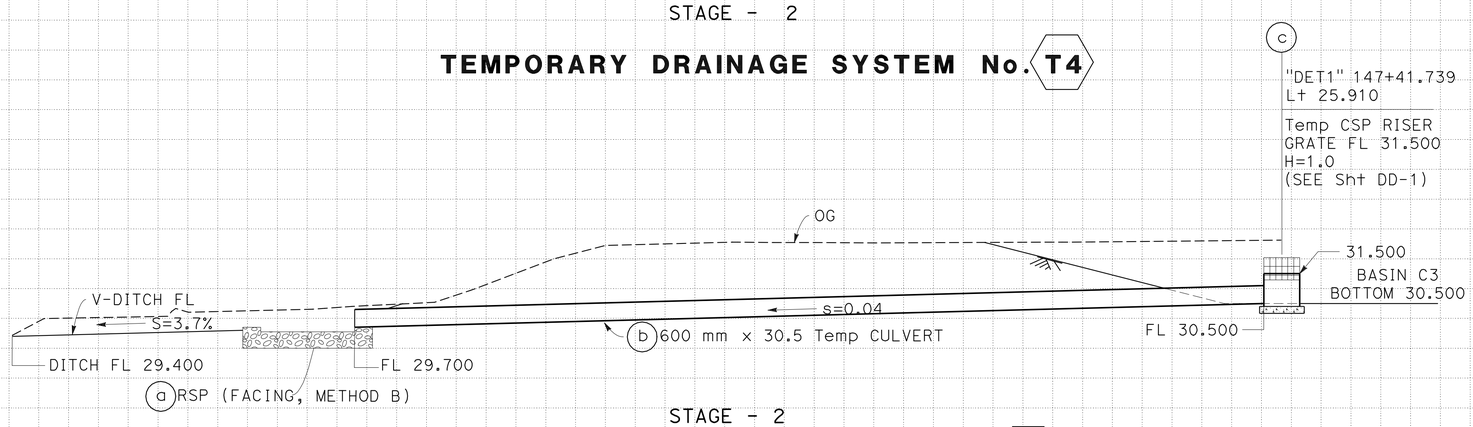

STAGE - 2

TEMPORARY DRAINAGE SYSTEM No. T5

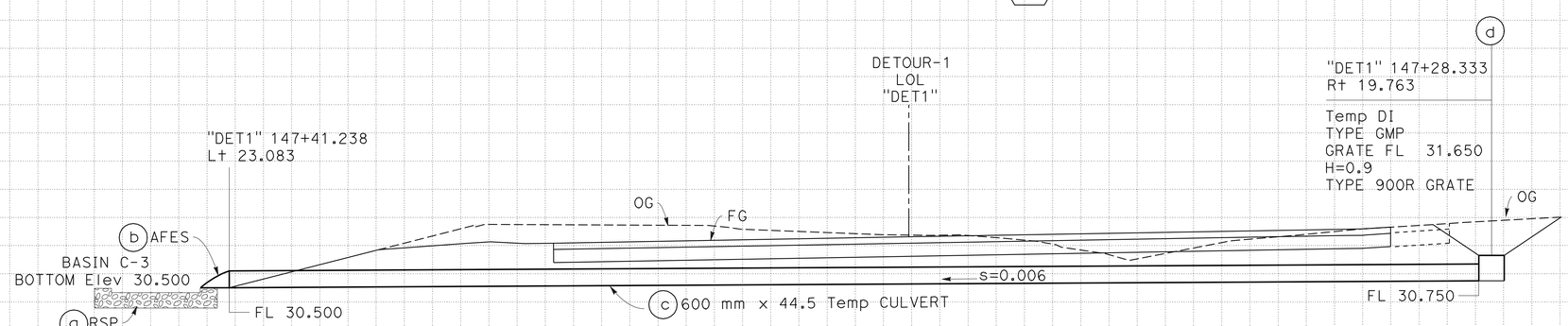

STAGE - 2

TEMPORARY DRAINAGE SYSTEM No. T6

ALL DIMENSIONS ARE IN METERS UNLESS OTHERWISE SHOWN

DRAINAGE PROFILE (TEMPORARY CULVERT)

SCALE: Horiz 1:100
Vert 1:100

DP-193

REVISED BY	DATE REVISED

CALCULATED-DESIGNED BY: PETER CHANDER
CHECKED BY: RONNIE KIER
FUNCTIONAL SUPERVISOR: DAVID FRANKE

STATE OF CALIFORNIA - DEPARTMENT OF TRANSPORTATION
06-DESIGN
Caltrans

Station
m³ Exc
Emb

LAST REVISION 05-07-10 DATE PLOTTED => 02-AUG-2010 TIME PLOTTED => 13:14

Dist	COUNTY	ROUTE	KILOMETER POST TOTAL PROJECT	SHEET No.	TOTAL SHEETS
05	Mon	101	R146.8/159.7	548	1402

Ronnie K. Kier 5-16-10
REGISTERED CIVIL ENGINEER DATE

7-26-10
PLANS APPROVAL DATE

REGISTERED PROFESSIONAL ENGINEER RONNIE K. KIER No. C60877 Exp. 12/31/11 CIVIL STATE OF CALIFORNIA

THE STATE OF CALIFORNIA OR ITS OFFICERS OR AGENTS SHALL NOT BE RESPONSIBLE FOR THE ACCURACY OR COMPLETENESS OF ELECTRONIC COPIES OF THIS PLAN SHEET.

Caltrans Metric

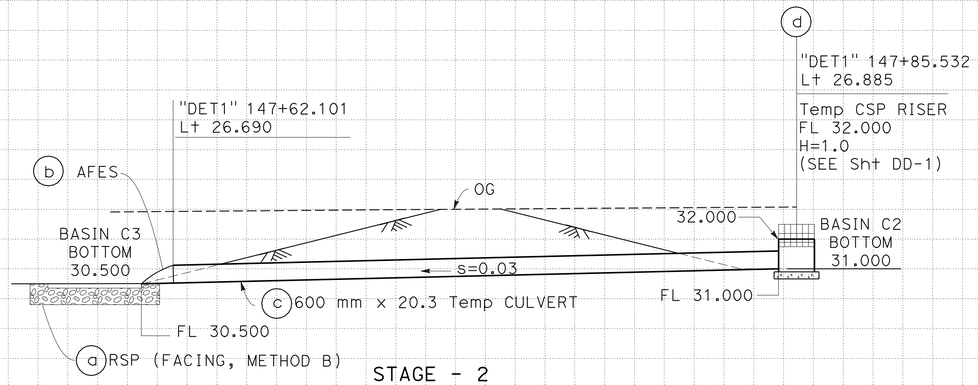

STAGE - 2

TEMPORARY DRAINAGE SYSTEM No. T7

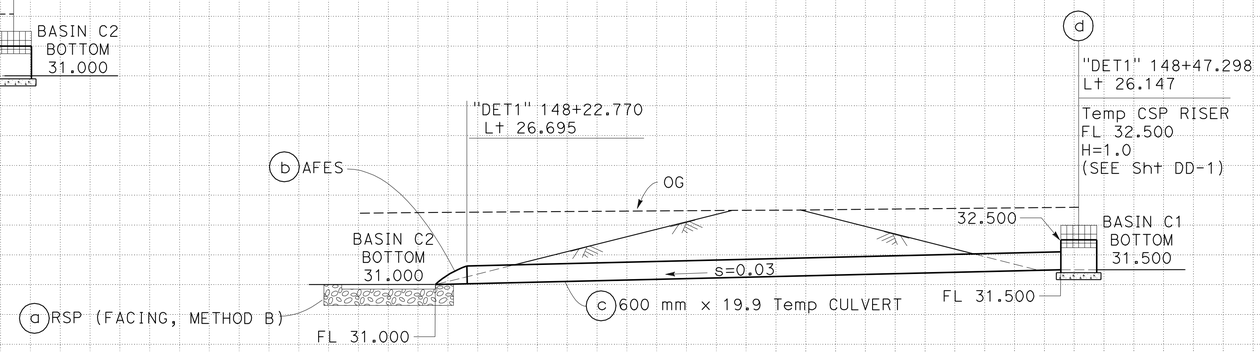

STAGE - 2

TEMPORARY DRAINAGE SYSTEM No. T8

STAGE - 2

TEMPORARY DRAINAGE SYSTEM No. T9

ALL DIMENSIONS ARE IN METERS UNLESS OTHERWISE SHOWN

DRAINAGE PROFILE
(TEMPORARY CULVERT)

SCALE: Horiz 1:100
Vert 1:100

DP-194

Station	
m^3 Exc	
m^3 Emb	

STATE OF CALIFORNIA - DEPARTMENT OF TRANSPORTATION
Caltrans 06-DESIGN

FUNCTIONAL SUPERVISOR DAVID FRANKE
CALCULATED-DESIGNED BY PETER CHANDER
CHECKED BY RONNIE KIER
REVISED BY
DATE REVISED

LAST REVISION 05-07-10
DATE PLOTTED => 02-AUG-2010
TIME PLOTTED => 13:14

Dist	COUNTY	ROUTE	KILOMETER POST TOTAL PROJECT	SHEET No.	TOTAL SHEETS
05	Mon	101	R146.8/159.7	549	1402

Ronnie K. Kier 5-16-10
REGISTERED CIVIL ENGINEER DATE

7-26-10
PLANS APPROVAL DATE

REGISTERED PROFESSIONAL ENGINEER RONNIE K. KIER No. C60877 Exp. 12/31/11 CIVIL STATE OF CALIFORNIA

THE STATE OF CALIFORNIA OR ITS OFFICERS OR AGENTS SHALL NOT BE RESPONSIBLE FOR THE ACCURACY OR COMPLETENESS OF ELECTRONIC COPIES OF THIS PLAN SHEET.

Caltrans Metric

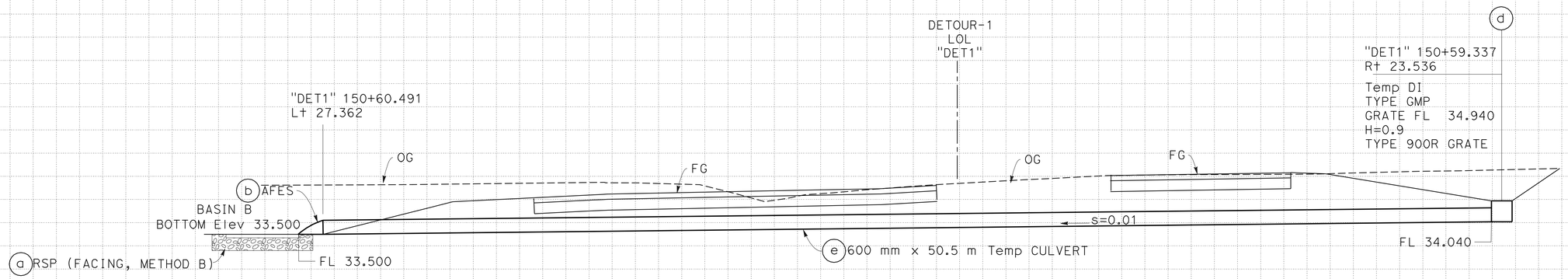

STAGE - 2

TEMPORARY DRAINAGE SYSTEM No. T10

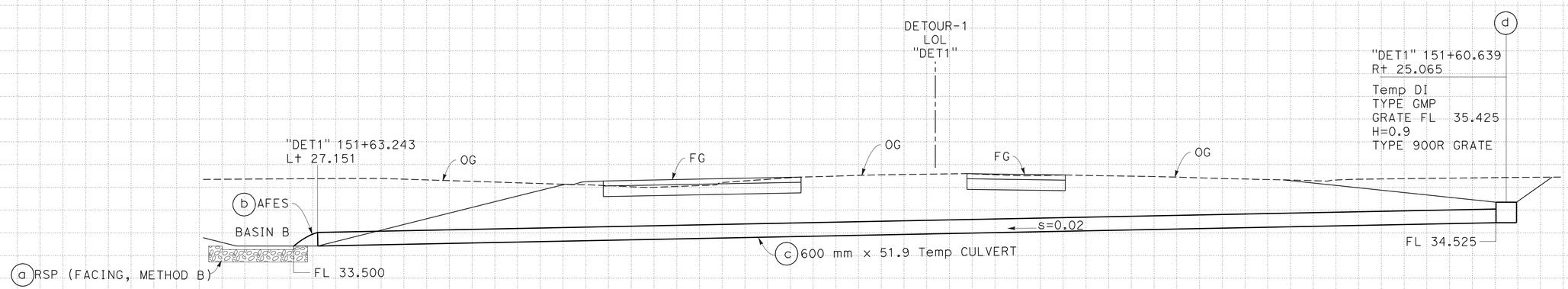

STAGE - 2

TEMPORARY DRAINAGE SYSTEM No. T11

ALL DIMENSIONS ARE IN METERS UNLESS OTHERWISE SHOWN

DRAINAGE PROFILE (TEMPORARY CULVERT)

SCALE: Horiz 1:100
Vert 1:100

DP-195

Station	
m^3 Exc	
m^3 Emb	

STATE OF CALIFORNIA - DEPARTMENT OF TRANSPORTATION
Caltrans
06-DESIGN

FUNCTIONAL SUPERVISOR: DAVID FRANKE

CALCULATED-DESIGNED BY: PETER CHANDER
CHECKED BY: RONNIE KIER

REVISED BY
DATE REVISED

LAST REVISION 05-07-10
DATE PLOTTED => 02-AUG-2010
TIME PLOTTED => 13:14

Dist	COUNTY	ROUTE	KILOMETER POST TOTAL PROJECT	SHEET No.	TOTAL SHEETS
05	Mon	101	R146.8/159.7	550	1402

Ronnie K. Kier 5-16-10
REGISTERED CIVIL ENGINEER DATE

7-26-10
PLANS APPROVAL DATE

REGISTERED PROFESSIONAL ENGINEER RONNIE K. KIER No. C60877 Exp. 12/31/11 CIVIL STATE OF CALIFORNIA

THE STATE OF CALIFORNIA OR ITS OFFICERS OR AGENTS SHALL NOT BE RESPONSIBLE FOR THE ACCURACY OR COMPLETENESS OF ELECTRONIC COPIES OF THIS PLAN SHEET.

Caltrans Metric

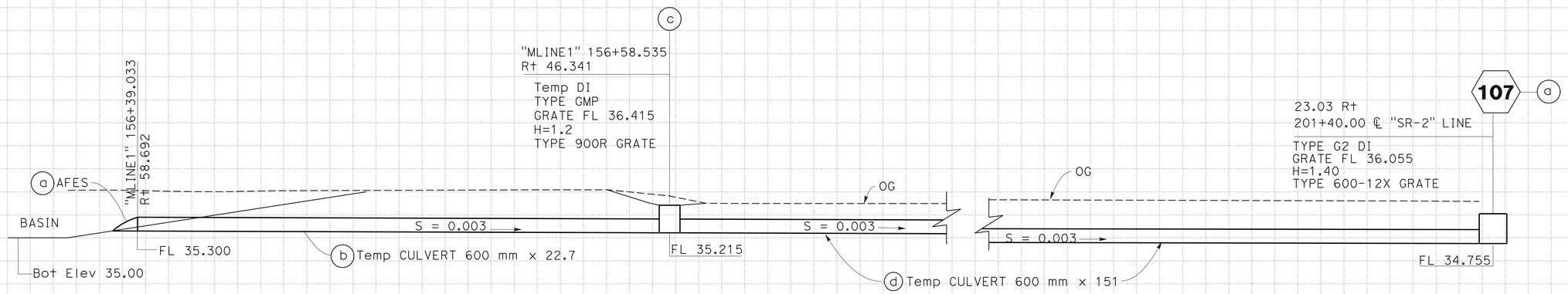

STAGE - 2

TEMPORARY DRAINAGE SYSTEM No. T12

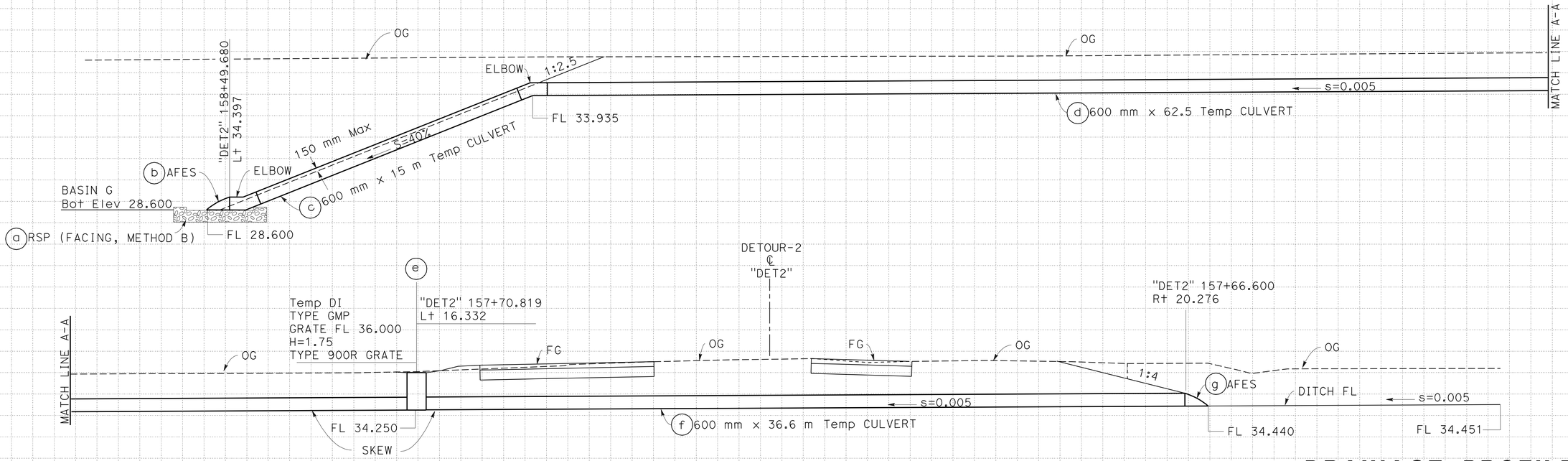

STAGE - 2

TEMPORARY DRAINAGE SYSTEM No. T13

ALL DIMENSIONS ARE IN METERS UNLESS OTHERWISE SHOWN

DRAINAGE PROFILE (TEMPORARY CULVERT)

SCALE: Horiz 1:100
Vert 1:100

DP-196

REVISED BY	DATE REVISED
PETER CHANDER	
RONNIE KIER	
CALCULATED-DESIGNED BY	
CHECKED BY	
FUNCTIONAL SUPERVISOR	DAVID FRANKE

STATE OF CALIFORNIA - DEPARTMENT OF TRANSPORTATION
06-DESIGN
Caltrans

Station
m³ Exc
Emb

LAST REVISION 05-07-10 | DATE PLOTTED => 02-AUG-2010 | TIME PLOTTED => 13:14

Dist	COUNTY	ROUTE	KILOMETER POST TOTAL PROJECT	SHEET No.	TOTAL SHEETS
05	Mon	101	R146.8/159.7	551	1402

Caltrans Metric

Ronnie K. Kier 5-16-10
REGISTERED CIVIL ENGINEER DATE

7-26-10
PLANS APPROVAL DATE

REGISTERED PROFESSIONAL ENGINEER RONNIE K. KIER No. C60877 Exp. 12/31/11 CIVIL STATE OF CALIFORNIA

THE STATE OF CALIFORNIA OR ITS OFFICERS OR AGENTS SHALL NOT BE RESPONSIBLE FOR THE ACCURACY OR COMPLETENESS OF ELECTRONIC COPIES OF THIS PLAN SHEET.

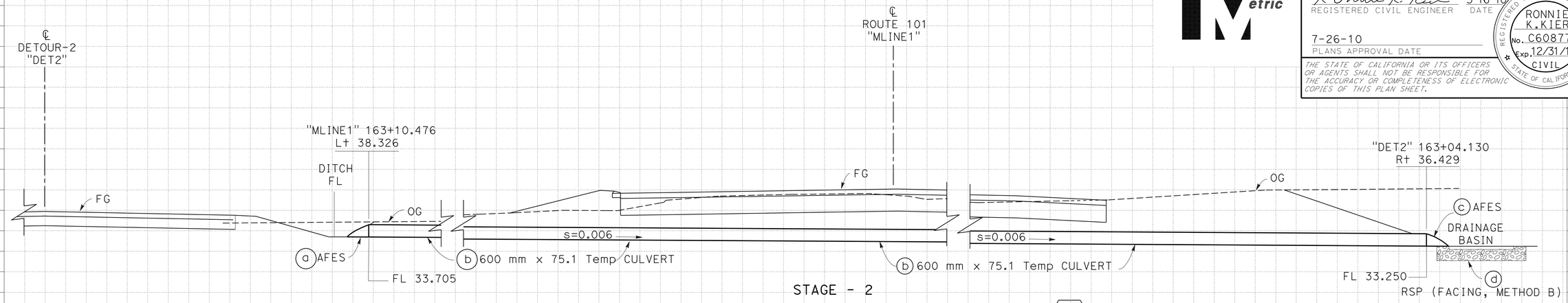

STAGE - 2

TEMPORARY DRAINAGE SYSTEM No. T14

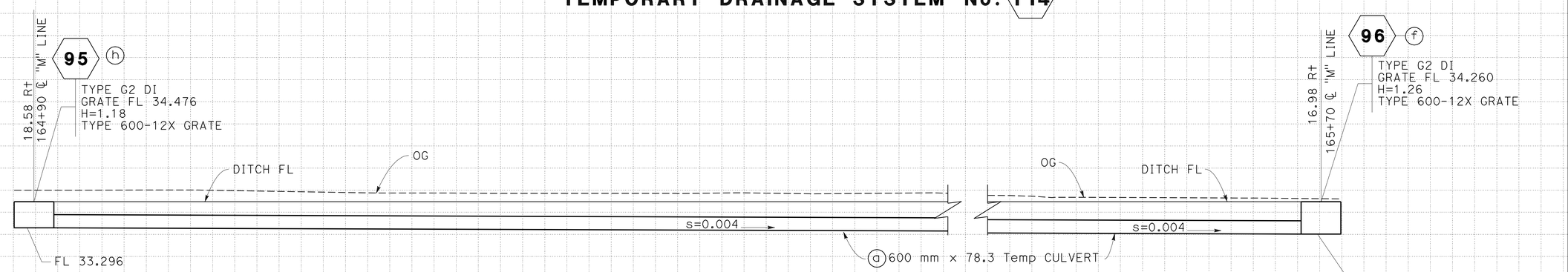

STAGE - 2

TEMPORARY DRAINAGE SYSTEM No. T15

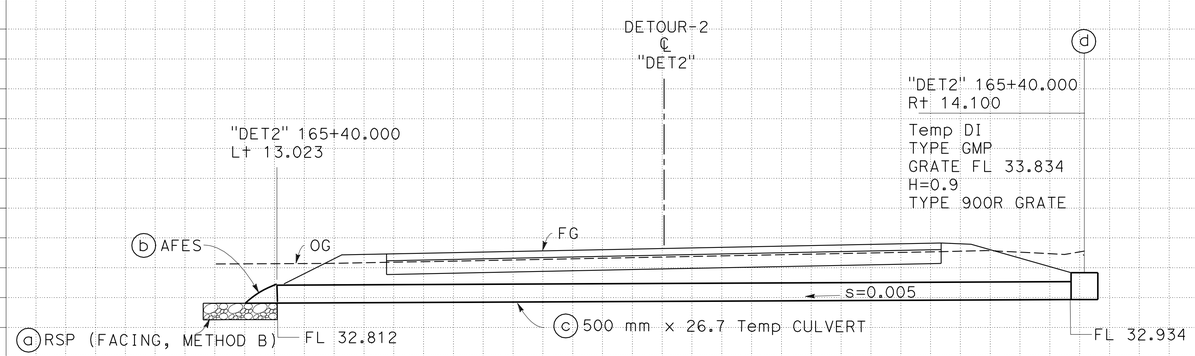

STAGE - 2

TEMPORARY DRAINAGE SYSTEM No. T16

ALL DIMENSIONS ARE IN METERS UNLESS OTHERWISE SHOWN

DRAINAGE PROFILE
(TEMPORARY CULVERT)

SCALE: Horiz 1:100
Vert 1:100

DP-197

Station	
m^3	Exc
	Emb

STATE OF CALIFORNIA - DEPARTMENT OF TRANSPORTATION
Caltrans
06-DESIGN
FUNCTIONAL SUPERVISOR: DAVID FRANKE
CALCULATED-DESIGNED BY: PETER CHANDER
CHECKED BY: RONNIE KIER
REVISED BY / DATE REVISED

LAST REVISION DATE PLOTTED => 02-AUG-2010
TIME PLOTTED => 14:02
05-07-10

Dist	COUNTY	ROUTE	KILOMETER POST TOTAL PROJECT	SHEET No.	TOTAL SHEETS
05	Mon	101	R146.8/159.7	552	1402

Ronnie K. Kier — REGISTERED CIVIL ENGINEER — 5-16-10 DATE

7-26-10
PLANS APPROVAL DATE

REGISTERED PROFESSIONAL ENGINEER RONNIE K. KIER No. C60877 Exp. 12/31/11 CIVIL STATE OF CALIFORNIA

THE STATE OF CALIFORNIA OR ITS OFFICERS OR AGENTS SHALL NOT BE RESPONSIBLE FOR THE ACCURACY OR COMPLETENESS OF ELECTRONIC COPIES OF THIS PLAN SHEET.

Caltrans Metric

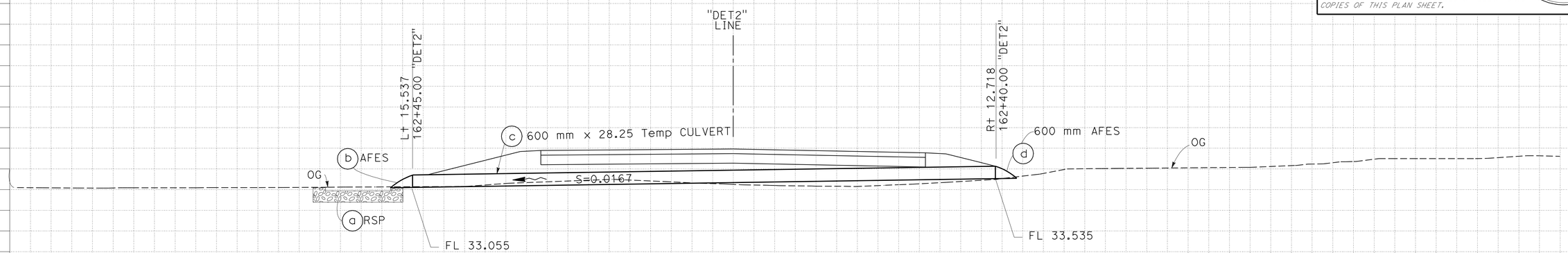

TEMPORARY DRAINAGE SYSTEM No. T17

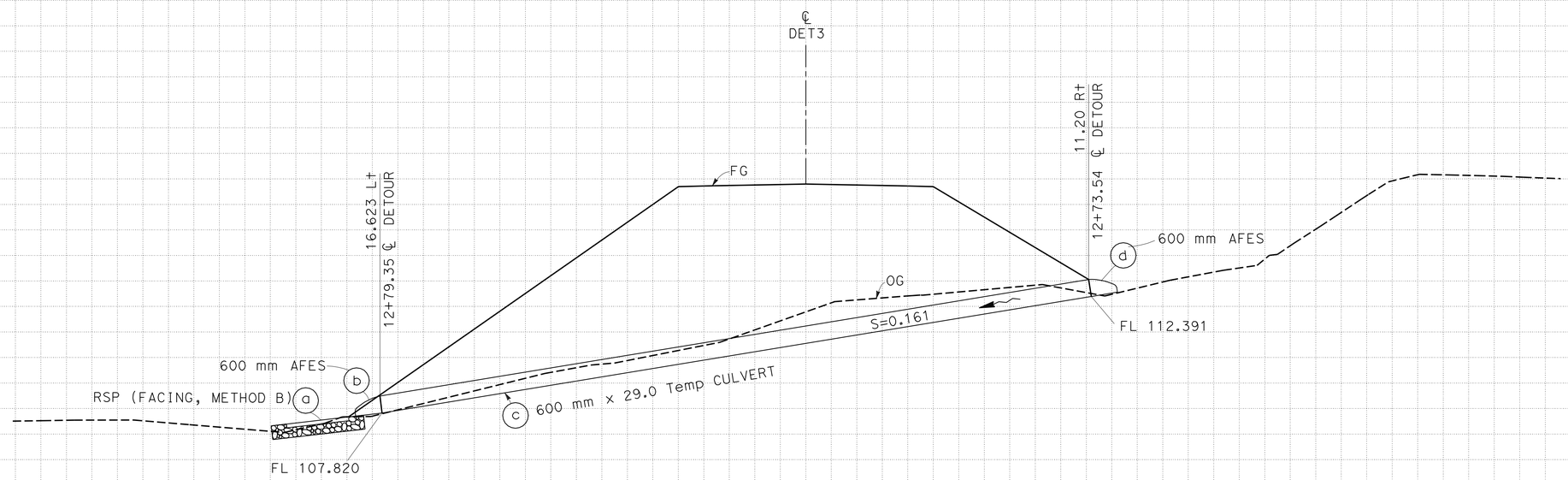

TEMPORARY DRAINAGE SYSTEM No. T18

ALL DIMENSIONS ARE IN METERS UNLESS OTHERWISE SHOWN

DRAINAGE PROFILE (TEMPORARY CULVERT)

SCALE: Horiz 1:100
Vert 1:100

DP-198

REVISED BY	DATE REVISED
CARLOS BLANCAS	RONNIE KIER

CALCULATED-DESIGNED BY / CHECKED BY

FUNCTIONAL SUPERVISOR: DAVID FRANKE

STATE OF CALIFORNIA - DEPARTMENT OF TRANSPORTATION
Caltrans 06-DESIGN

Station
m^3 Exc
Emb

LAST REVISION 05-07-10 | DATE PLOTTED => 02-AUG-2010 | TIME PLOTTED => 14:02

Dist	COUNTY	ROUTE	KILOMETER POST TOTAL PROJECT	SHEET No.	TOTAL SHEETS
05	Mon	101	R146.8/159.7	553	1402

Ronnie K. Kier 5-16-10
REGISTERED CIVIL ENGINEER DATE

7-26-10
PLANS APPROVAL DATE

REGISTERED PROFESSIONAL ENGINEER RONNIE K. KIER No. C60877 Exp. 12/31/11 CIVIL STATE OF CALIFORNIA

THE STATE OF CALIFORNIA OR ITS OFFICERS OR AGENTS SHALL NOT BE RESPONSIBLE FOR THE ACCURACY OR COMPLETENESS OF ELECTRONIC COPIES OF THIS PLAN SHEET.

Caltrans Metric

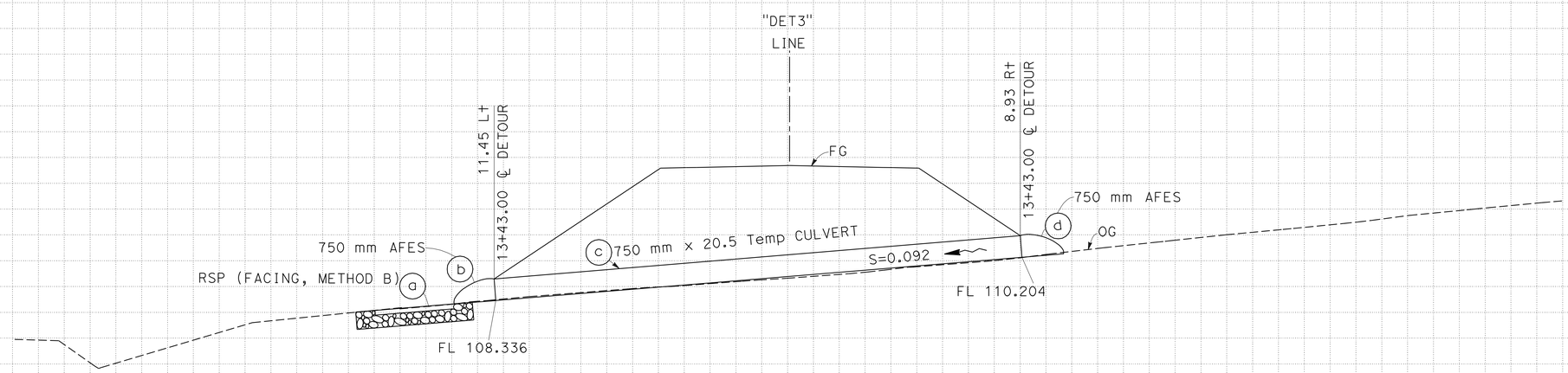

TEMPORARY DRAINAGE SYSTEM No. T19

ALL DIMENSIONS ARE IN METERS UNLESS OTHERWISE SHOWN

DRAINAGE PROFILE (TEMPORARY CULVERT)

SCALE: Horiz 1:100
Vert 1:100

DP-199

Station	
m^3 Exc	
m^3 Emb	

STATE OF CALIFORNIA - DEPARTMENT OF TRANSPORTATION
Caltrans 06-DESIGN

FUNCTIONAL SUPERVISOR: DAVID FRANKE
CALCULATED-DESIGNED BY: CARLOS BLANCAS
CHECKED BY: RONNIE KIER
REVISED BY
DATE REVISED

LAST REVISION 05-07-10
DATE PLOTTED => 02-AUG-2010
TIME PLOTTED => 14:02

Dist	COUNTY	ROUTE	KILOMETER POST TOTAL PROJECT	SHEET No.	TOTAL SHEETS
05	Mon	101	R146.8/159.7	554	1402

Ronnie K. Kier 5-16-10
REGISTERED CIVIL ENGINEER DATE

7-26-10
PLANS APPROVAL DATE

REGISTERED PROFESSIONAL ENGINEER RONNIE K. KIER No. C60877 Exp. 12/31/11 CIVIL STATE OF CALIFORNIA

THE STATE OF CALIFORNIA OR ITS OFFICERS OR AGENTS SHALL NOT BE RESPONSIBLE FOR THE ACCURACY OR COMPLETENESS OF ELECTRONIC COPIES OF THIS PLAN SHEET.

Caltrans Metric

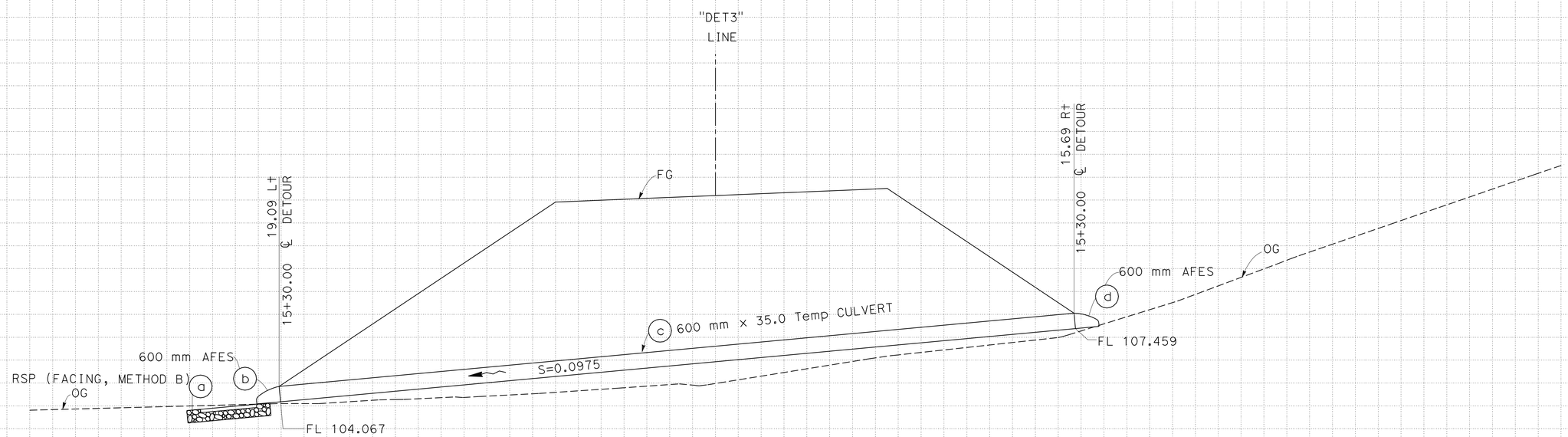

TEMPORARY DRAINAGE SYSTEM No. T20

ALL DIMENSIONS ARE IN METERS UNLESS OTHERWISE SHOWN

DRAINAGE PROFILE (TEMPORARY CULVERT)

SCALE: Horiz 1:100
Vert 1:100

DP-200

Station	
m^3 Exc	
m^3 Emb	

STATE OF CALIFORNIA - DEPARTMENT OF TRANSPORTATION
Caltrans
06-DESIGN

FUNCTIONAL SUPERVISOR: DAVID FRANKE

CALCULATED-DESIGNED BY: CARLOS BLANCAS
CHECKED BY: RONNIE KIER

REVISED BY | DATE REVISED

LAST REVISION DATE PLOTTED => 02-AUG-2010
05-07-10 TIME PLOTTED => 14:02

Dist	COUNTY	ROUTE	KILOMETER POST TOTAL PROJECT	SHEET No.	TOTAL SHEETS
05	Mon	101	R146.8/159.7	555	1402

REGISTERED CIVIL ENGINEER 5-16-10 DATE

7-26-10
PLANS APPROVAL DATE

REGISTERED PROFESSIONAL ENGINEER DANIEL B. MASSA No. 59095 Exp. 6/30/11 CIVIL STATE OF CALIFORNIA

THE STATE OF CALIFORNIA OR ITS OFFICERS OR AGENTS SHALL NOT BE RESPONSIBLE FOR THE ACCURACY OR COMPLETENESS OF ELECTRONIC COPIES OF THIS PLAN SHEET.

Caltrans Metric

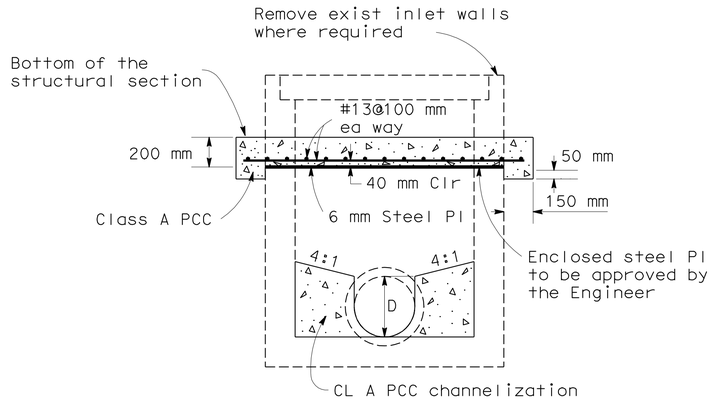

CAP INLET (TYPICAL)

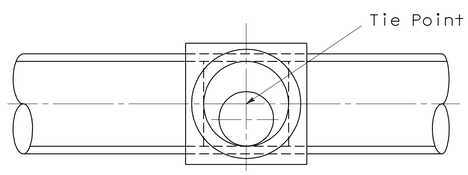

MANHOLE

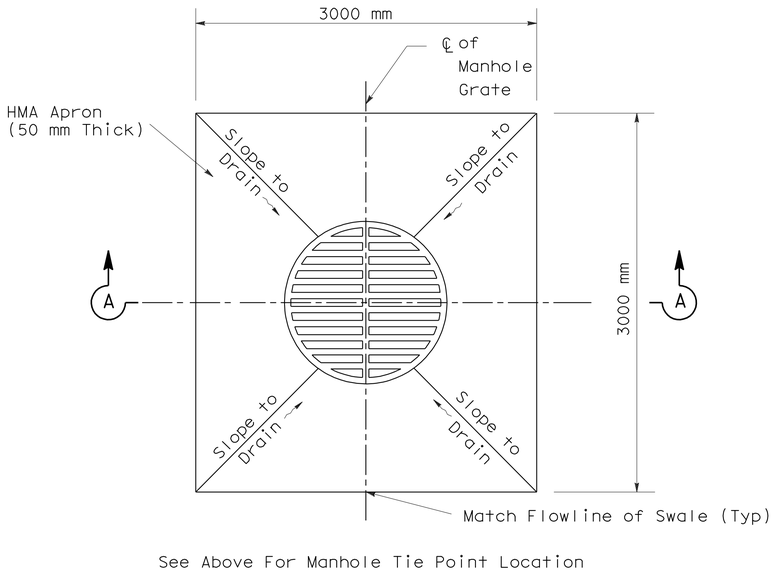

See Above For Manhole Tie Point Location

MANHOLE WITH GRATE, GMP, OMP, OMPI
WITH HMA APRON

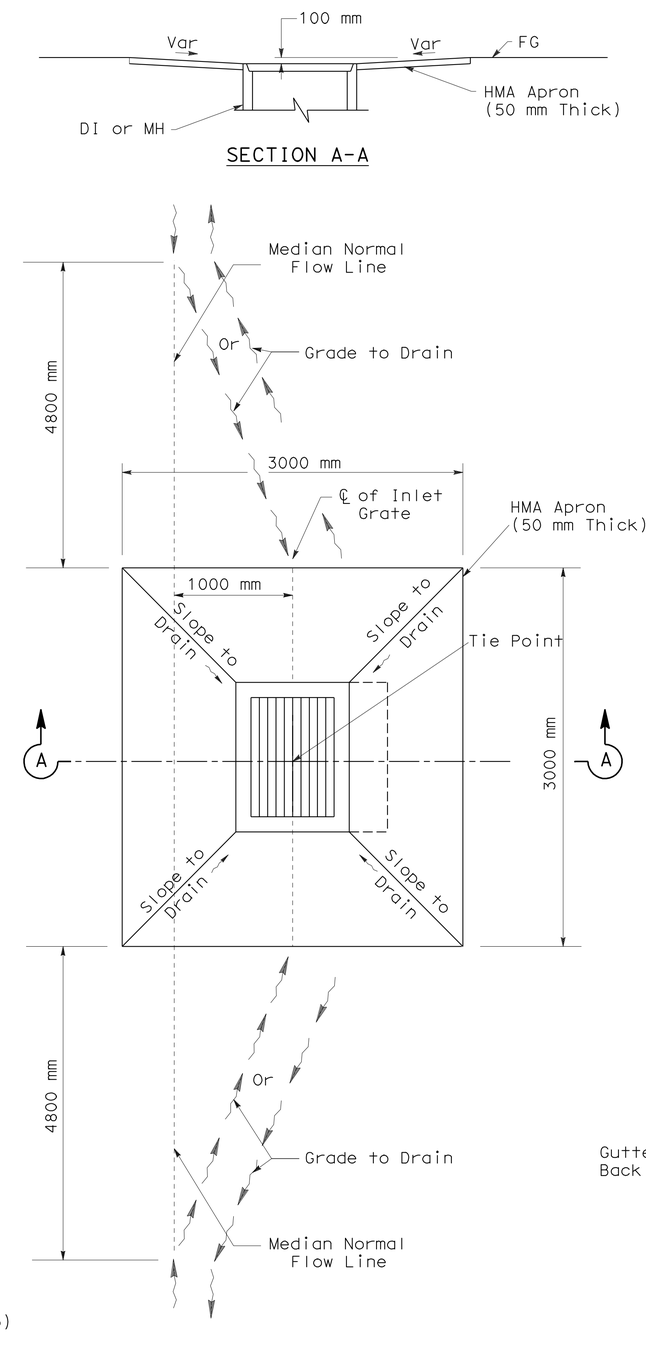

MEDIAN INLET AND INLET IN DIRT AREAS
WITH HMA APRON

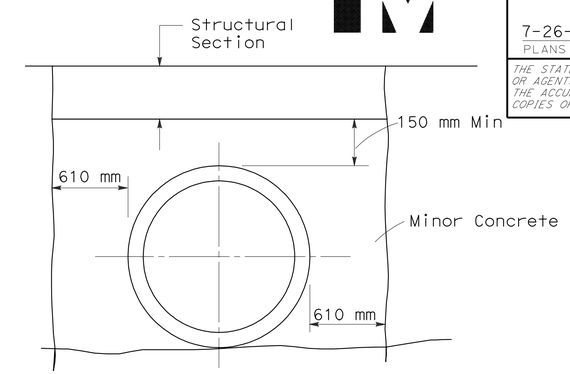

MINOR CONCRETE (BACKFILL)

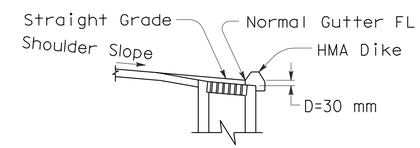

SECTION B-B

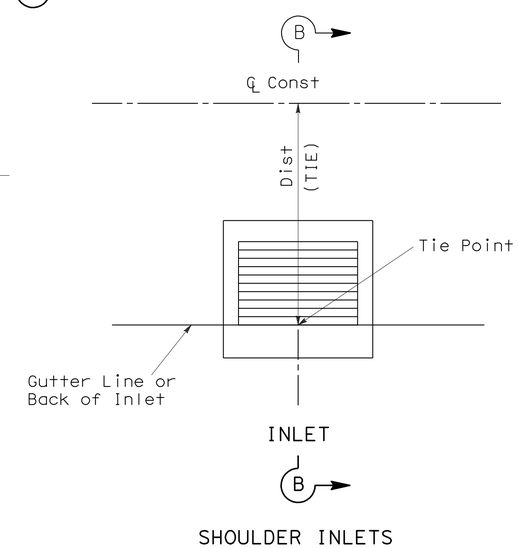

SHOULDER INLETS

NOTE:

1. Curb face opening inlets (type GO and GDO) are tied to the gutter flow line at center curb face opening.
2. Grate depression for inlets in unpaved areas is 0.10 m and 0.03 m in paved areas, unless noted otherwise.

TYPICAL STRUCTURE TIE POINTS

ALL DIMENSIONS ARE IN METERS UNLESS OTHERWISE SHOWN.

DRAINAGE DETAILS

NO SCALE

DD-1

REVISED BY	DATE REVISED
D. MASSA	10/06/09

CALCULATED-DESIGNED BY: MICHEAL ZAMORA
CHECKED BY: DAN MASSA

FUNCTIONAL SUPERVISOR: DAVID FRANKE

STATE OF CALIFORNIA - DEPARTMENT OF TRANSPORTATION
Caltrans 06-DESIGN

LAST REVISION 05-04-10 | DATE PLOTTED => 02-AUG-2010 | TIME PLOTTED => 14:02

Dist	COUNTY	ROUTE	KILOMETER POST TOTAL PROJECT	SHEET No.	TOTAL SHEETS
05	Mon	101	R146.8/159.7	556	1402

REGISTERED CIVIL ENGINEER — DATE 5-16-10

7-26-10
PLANS APPROVAL DATE

REGISTERED PROFESSIONAL ENGINEER DANIEL B. MASSA No. 59095 Exp. 6/30/11 CIVIL STATE OF CALIFORNIA

THE STATE OF CALIFORNIA OR ITS OFFICERS OR AGENTS SHALL NOT BE RESPONSIBLE FOR THE ACCURACY OR COMPLETENESS OF ELECTRONIC COPIES OF THIS PLAN SHEET.

NOTES:

1. Inlets shall be orientated with key facing traveled way.

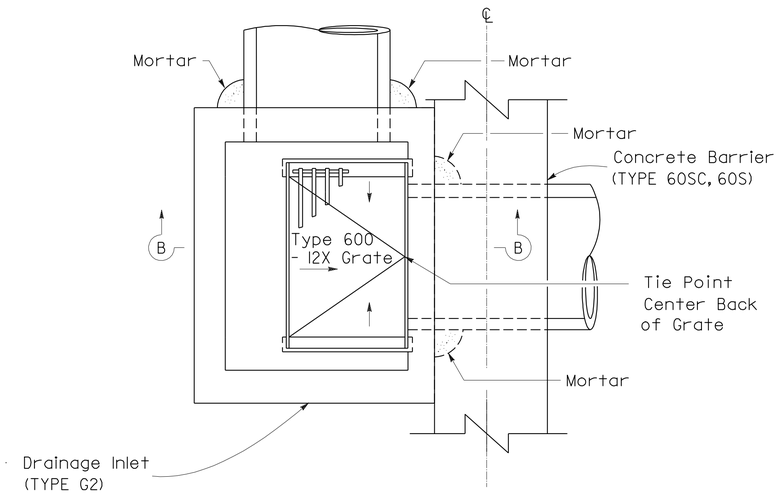

G2 INLET / BARRIER PLAN

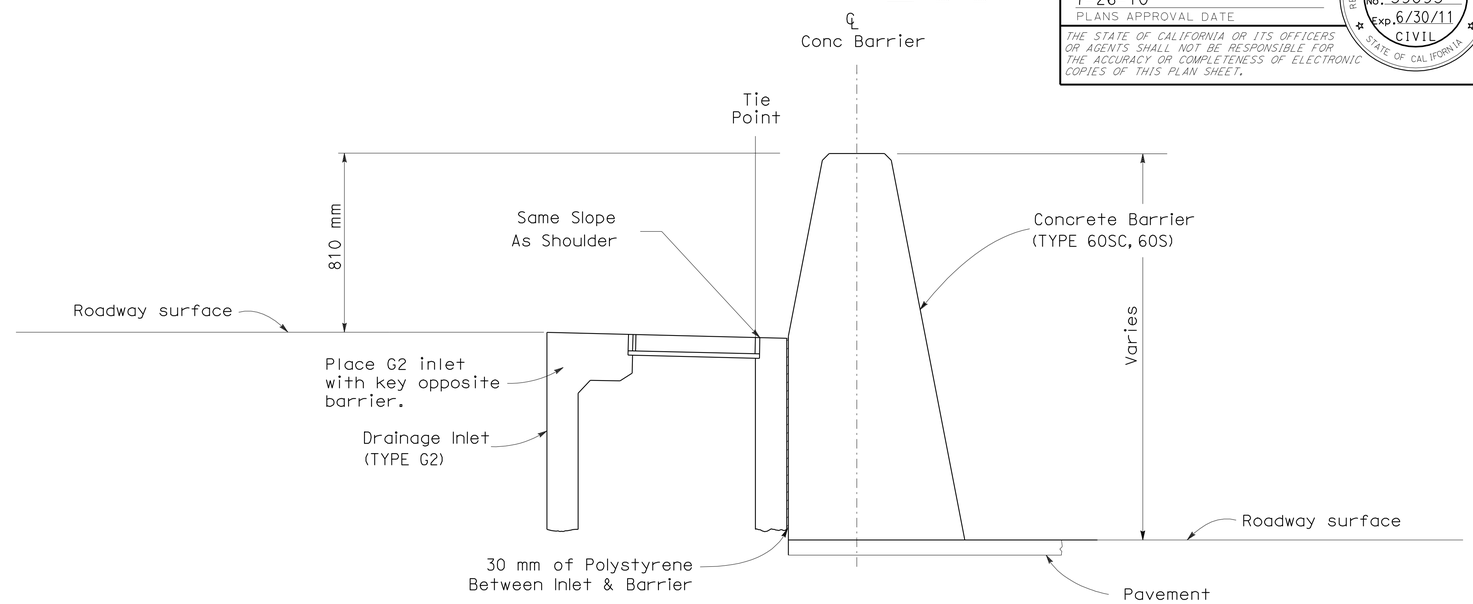

TYPICAL SECTION B-B

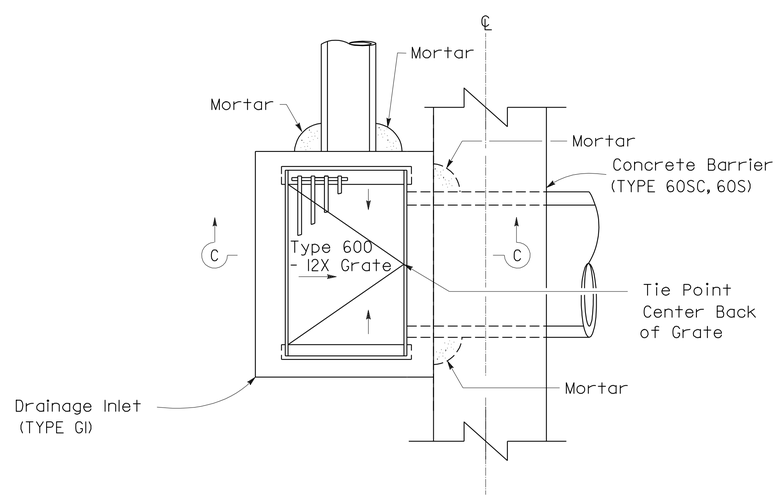

G1 INLET / BARRIER PLAN

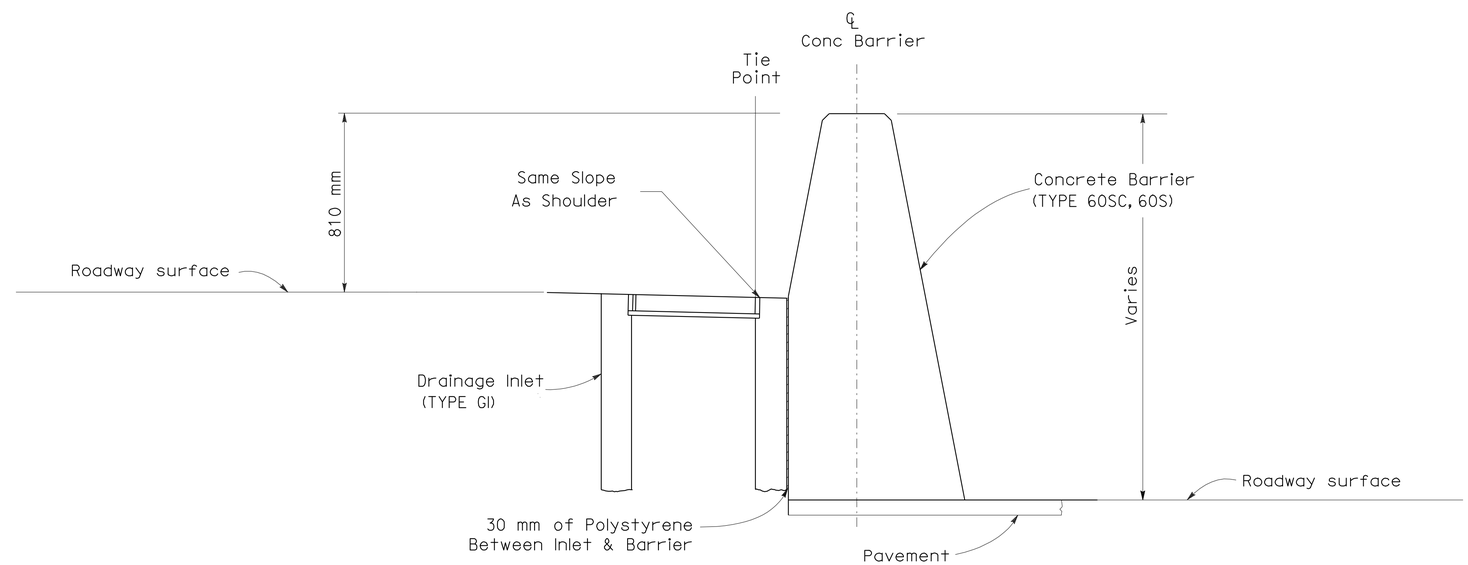

TYPICAL SECTION C-C

ALL DIMENSIONS ARE IN METERS
UNLESS OTHERWISE SHOWN.

DRAINAGE DETAILS

DRAINAGE INLET TYPES G1 AND G2 WITH CONCRETE BARRIER

NO SCALE

DD-2

STATE OF CALIFORNIA - DEPARTMENT OF TRANSPORTATION
Caltrans
06-DESIGN

FUNCTIONAL SUPERVISOR: DAVID FRANKE
CALCULATED-DESIGNED BY: RANDON HOLLAND
CHECKED BY: DAN MASSA
REVISED BY: RRH
DATE REVISED: 06/10/09

LAST REVISION 05-04-10 | DATE PLOTTED => 02-AUG-2010 | TIME PLOTTED => 14:02

Dist	COUNTY	ROUTE	KILOMETER POST TOTAL PROJECT	SHEET No.	TOTAL SHEETS
05	Mon	101	R146.8/159.7	557	1402

Caltrans Metric

DAN 5-16-10
REGISTERED CIVIL ENGINEER DATE

7-26-10
PLANS APPROVAL DATE

REGISTERED PROFESSIONAL ENGINEER DANIEL B. MASSA No. 59095 Exp. 6/30/11 CIVIL STATE OF CALIFORNIA

THE STATE OF CALIFORNIA OR ITS OFFICERS OR AGENTS SHALL NOT BE RESPONSIBLE FOR THE ACCURACY OR COMPLETENESS OF ELECTRONIC COPIES OF THIS PLAN SHEET.

NOTES:

1) "d" represents the outside diameter of the pipe connected to the flared-end section.

2) "w" represents the width of Flared End Section opening as shown on Std Plan.

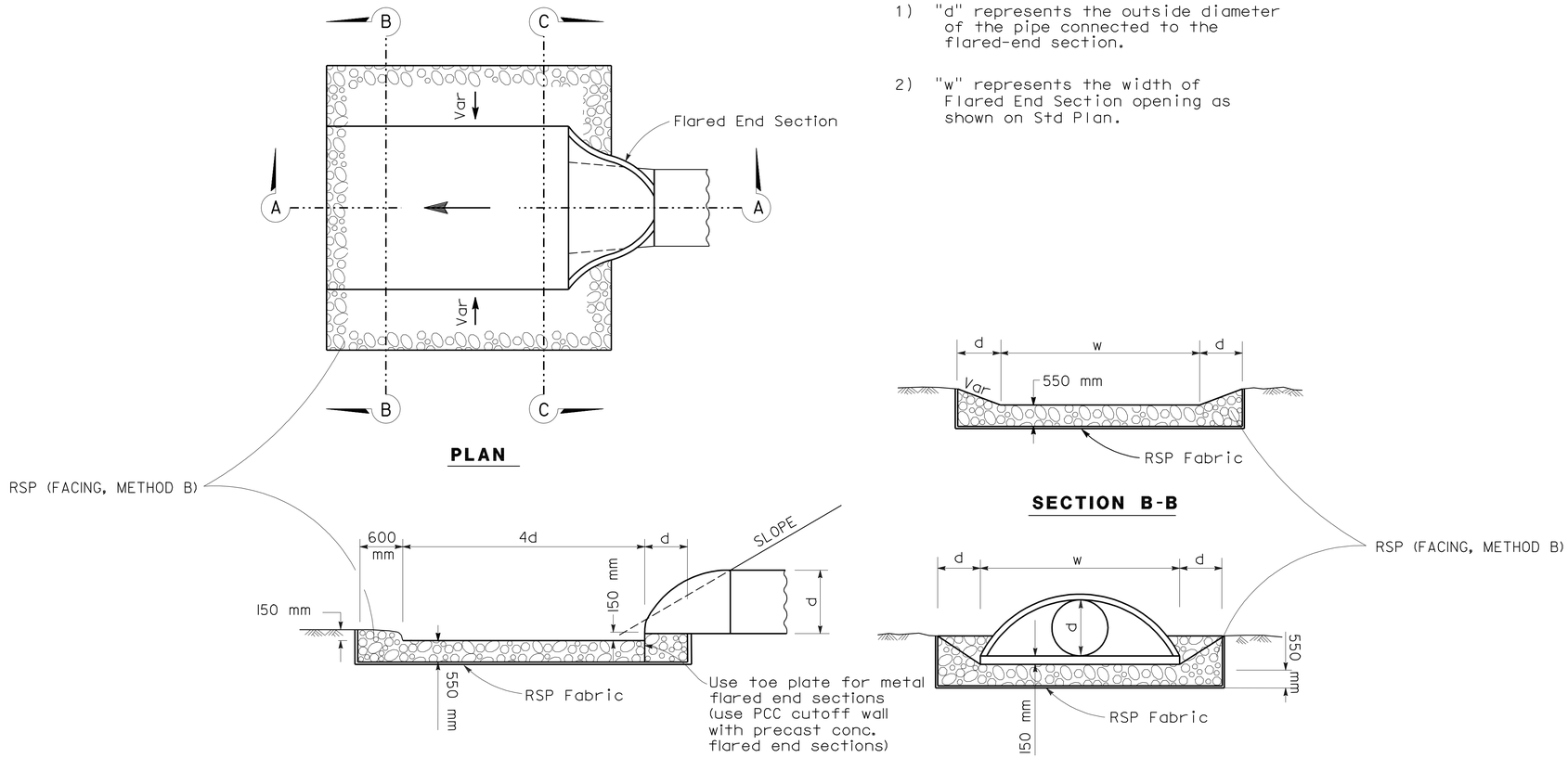

ROCK SLOPE PROTECTION

NO SCALE

ALL DIMENSIONS ARE IN METERS UNLESS OTHERWISE SHOWN.

DRAINAGE DETAILS

NO SCALE **DD-3**

D. MASSA	REVISED BY
05/05/09	DATE REVISED
CARLOS BLANCAS	CALCULATED-DESIGNED BY
DAN MASSA	CHECKED BY
DAVID FRANKE	FUNCTIONAL SUPERVISOR

STATE OF CALIFORNIA - DEPARTMENT OF TRANSPORTATION
Caltrans 06-DESIGN

LAST REVISION 02-22-10 DATE PLOTTED => 02-AUG-2010 TIME PLOTTED => 14:03

Dist	COUNTY	ROUTE	KILOMETER POST TOTAL PROJECT	SHEET No.	TOTAL SHEETS
05	Mon	101	R146.8/159.7	558	1402

REGISTERED CIVIL ENGINEER 5-16-10 DATE

7-26-10
PLANS APPROVAL DATE

REGISTERED PROFESSIONAL ENGINEER DANIEL B. MASSA No. 59095 Exp. 6/30/11 CIVIL STATE OF CALIFORNIA

THE STATE OF CALIFORNIA OR ITS OFFICERS OR AGENTS SHALL NOT BE RESPONSIBLE FOR THE ACCURACY OR COMPLETENESS OF ELECTRONIC COPIES OF THIS PLAN SHEET.

Caltrans Metric

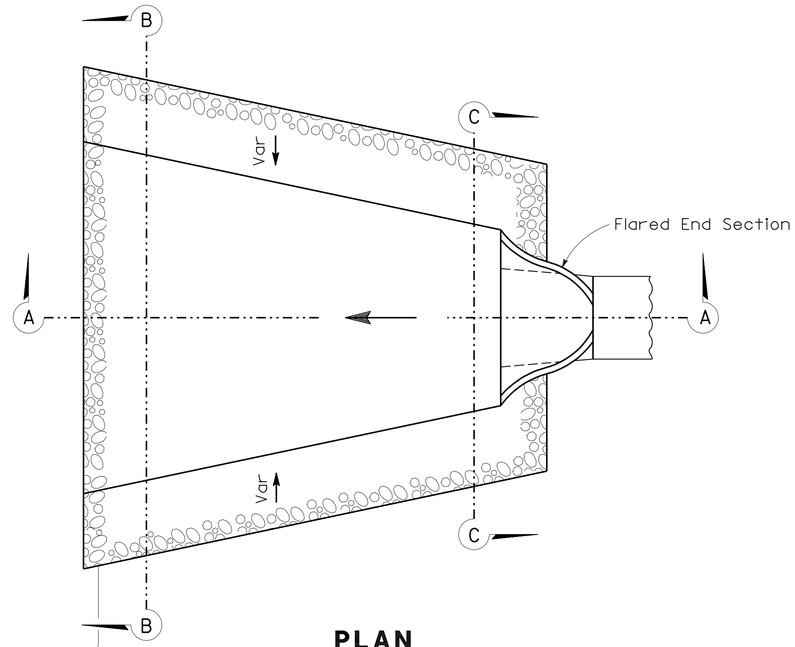

PLAN

NOTES:

1) "d" represents the outside diameter of the pipe connected to the flared-end section.

2) "w" represents the width of Flared End Section opening as shown on Std Plan.

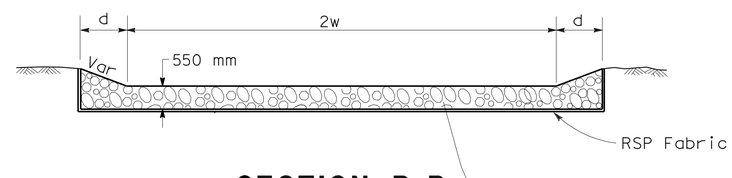

SECTION B-B

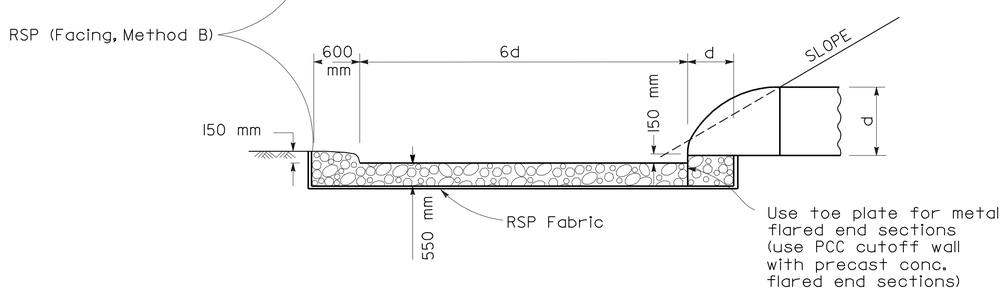

SECTION A-A

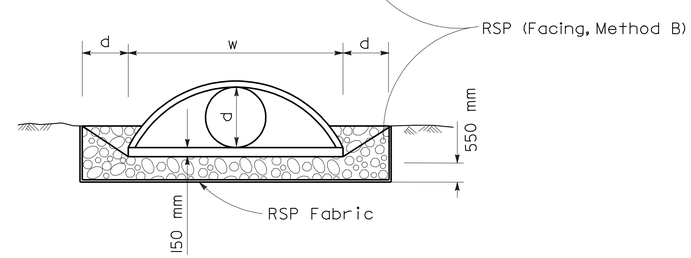

SECTION C-C

MODIFIED ROCK SLOPE PROTECTION

NO SCALE

ALL DIMENSIONS ARE IN METERS UNLESS OTHERWISE SHOWN.

DRAINAGE DETAILS

NO SCALE **DD-4**

HG	8/07
REVISED BY	DATE REVISED
CARLOS BLANCAS	
ERIC OLSON	
CALCULATED-DESIGNED BY	
CHECKED BY	
FUNCTIONAL SUPERVISOR	DAVID FRANKE

STATE OF CALIFORNIA - DEPARTMENT OF TRANSPORTATION
Caltrans 06 - DESIGN

LAST REVISION 05-04-10 | DATE PLOTTED => 02-AUG-2010 | TIME PLOTTED => 14:03

Dist	COUNTY	ROUTE	KILOMETER POST TOTAL PROJECT	SHEET No.	TOTAL SHEETS
05	Mon	101	R146.8/159.7	559	1402

Caltrans Metric

Eric Olson 5-16-10
REGISTERED CIVIL ENGINEER DATE

7-26-10
PLANS APPROVAL DATE

REGISTERED PROFESSIONAL ENGINEER ERIC H. OLSON No. 60801 Exp. 12/31/10 CIVIL STATE OF CALIFORNIA

THE STATE OF CALIFORNIA OR ITS OFFICERS OR AGENTS SHALL NOT BE RESPONSIBLE FOR THE ACCURACY OR COMPLETENESS OF ELECTRONIC COPIES OF THIS PLAN SHEET.

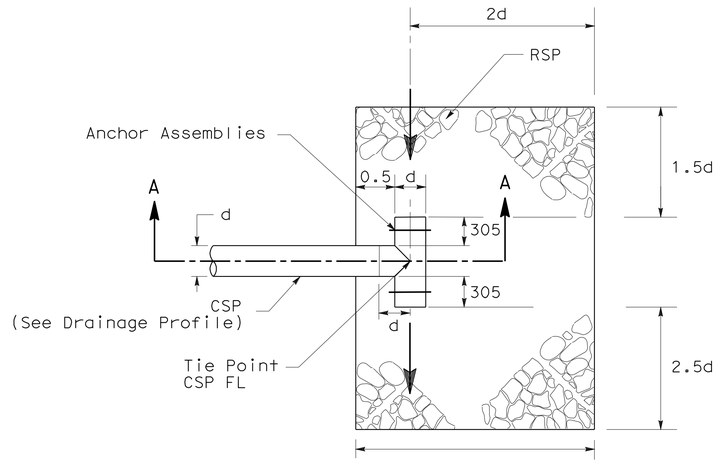

PLAN

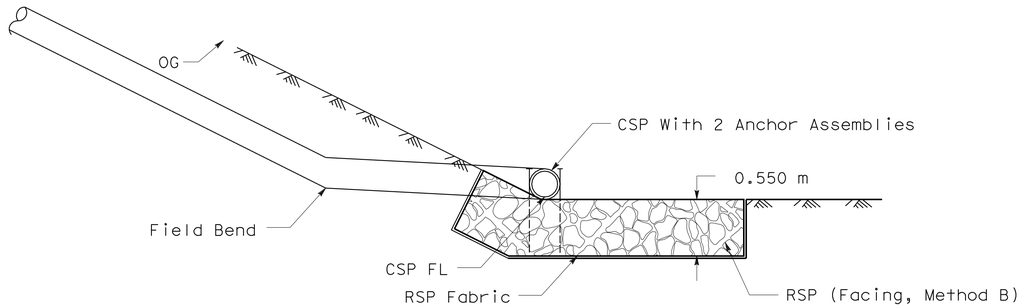

SECTION A-A

NOTES:

1. "d" Represents the Outside Diameter of the Pipe Connected to the T-Dissipator.

CSP 'T' DISSIPATOR WITH RSP

ALL DIMENSIONS ARE IN MILLIMITERS UNLESS OTHERWISE SHOWN.

DRAINAGE DETAILS

NO SCALE

DD-5

STATE OF CALIFORNIA - DEPARTMENT OF TRANSPORTATION
Caltrans
06-DESIGN

FUNCTIONAL SUPERVISOR
DAVID FRANKE

CALCULATED-DESIGNED BY CARLOS BLANCAS
CHECKED BY ERIC OLSON

REVISED BY D. MASSA
DATE REVISED 04/01/09

LAST REVISION 02-22-10
DATE PLOTTED => 02-AUG-2010
TIME PLOTTED => 14:03

Dist	COUNTY	ROUTE	KILOMETER POST TOTAL PROJECT	SHEET No.	TOTAL SHEETS
05	Mon	101	R146.8/159.7	560	1402

Eric Olson 5-16-10
REGISTERED CIVIL ENGINEER DATE

7-26-10
PLANS APPROVAL DATE

REGISTERED PROFESSIONAL ENGINEER ERIC H. OLSON No. 60801 Exp. 12/31/10 CIVIL STATE OF CALIFORNIA

THE STATE OF CALIFORNIA OR ITS OFFICERS OR AGENTS SHALL NOT BE RESPONSIBLE FOR THE ACCURACY OR COMPLETENESS OF ELECTRONIC COPIES OF THIS PLAN SHEET.

Caltrans Metric

NOTE:
For more Detailed Information on
HMA Overside Drain, See Std Plans

℄ Station / Offset / FL	Overside Drain End Station / Offset / FL	Length (m)	Place HMA (Misc Area) (m^2)	RSP (Facing, Method B) (m^3)	RSP Fabric (Class 8) (m^2)
160+35.00 "M" Line / 17.10 Rt / 36.800	160+35.00 "M" Line / 23.12 Rt / 35.863	6.1	0.36	1.2	5.6
166+60.00 "P" Line / 14.30 Rt / 46.22	166+60.00 "P" Line / 21.76 Rt / 45.95	7.5	0.45	1.2	5.6
186+16.28 "SN" Line / 10.80 Rt / 87.097	186+16.28 "SN" Line / 15.87 Rt / 85.895	5.2	0.31	1.2	5.6
198+10.15 "SS" Line / 11.22 Lt / 134.82	198+10.14 "SS" Line / 15.22 Lt / 134.469	4.0	0.24	1.2	5.6
193+21.94 "SN" Line / 11.70 Rt / 108.534	193+20.00 "SN" Line / 15.70 Rt / 108.07	3.5	0.21	1.2	5.6
49+46.23 "HARR" Line / 19.18 Rt / 35.000	49+46.04 "HARR" Line / 22.91 Rt / 34.69	3.7	0.22	1.2	5.6
Total			1.79 *	7.2 *	33.6 *

* Quantity included in Summary of Drainage Quantities on Sheet DQ-63

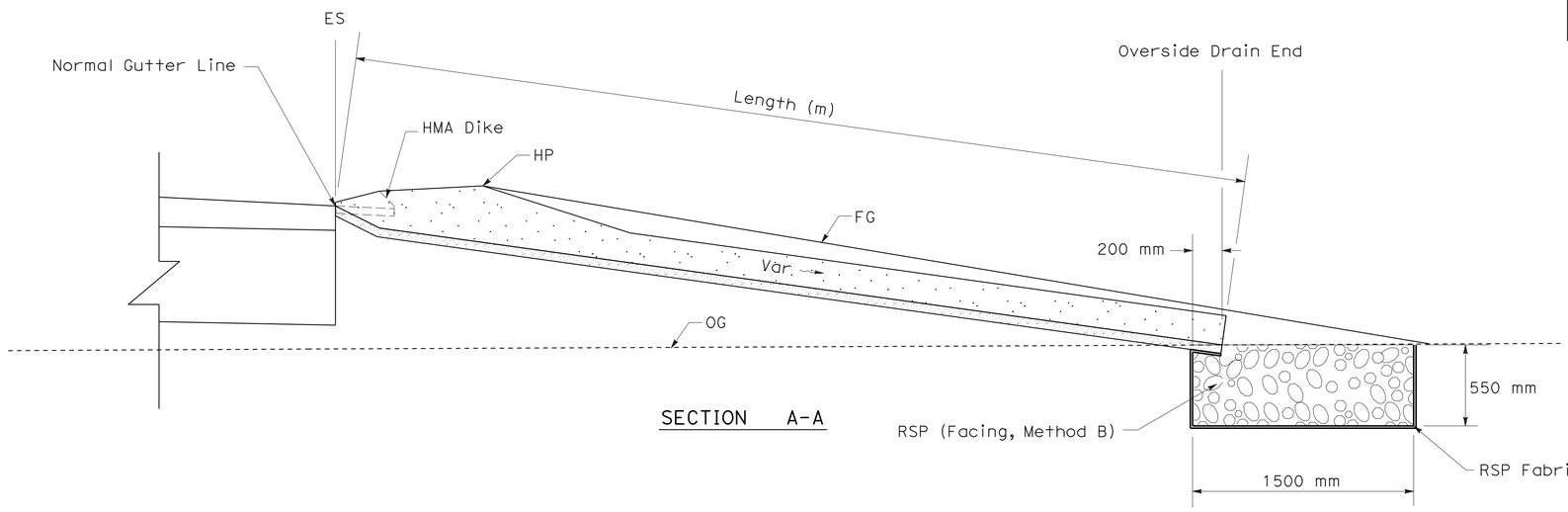

SECTION A-A

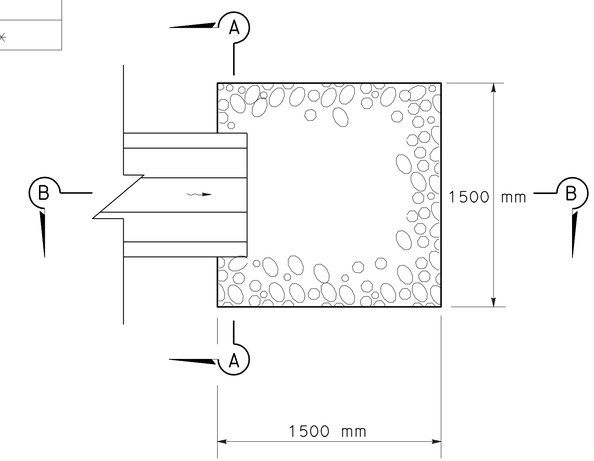

PLAN

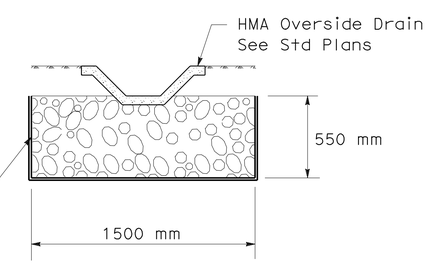

SECTION B-B

ROCK SLOPE PROTECTION FOR HMA OVERSIDE DRAIN

NO SCALE

ALL DIMENSIONS ARE IN METERS
UNLESS OTHERWISE SHOWN.

DRAINAGE DETAILS

NO SCALE **DD-6**

STATE OF CALIFORNIA - DEPARTMENT OF TRANSPORTATION
Caltrans
06-DESIGN
FUNCTIONAL SUPERVISOR DAVID FRANKE
CALCULATED-DESIGNED BY MICHEAL ZAMORA
CHECKED BY DAN MASSA
REVISED BY D. MASSA
DATE REVISED 01/05/10

LAST REVISION 05-16-10 DATE PLOTTED => 02-AUG-2010 TIME PLOTTED => 14:03

Dist	COUNTY	ROUTE	KILOMETER POST TOTAL PROJECT	SHEET No.	TOTAL SHEETS
05	Mon	101	R146.8/159.7	561	1402

Eric Olson 5-16-10
REGISTERED CIVIL ENGINEER DATE

7-26-10
PLANS APPROVAL DATE

REGISTERED PROFESSIONAL ENGINEER ERIC H. OLSON No. 60801 Exp. 12/31/10 CIVIL STATE OF CALIFORNIA

THE STATE OF CALIFORNIA OR ITS OFFICERS OR AGENTS SHALL NOT BE RESPONSIBLE FOR THE ACCURACY OR COMPLETENESS OF ELECTRONIC COPIES OF THIS PLAN SHEET.

NOTES:

1. T-Dissipator Length is Included in Total Pipe Length, Unless Noted on Plans.

LOCATION OF CSP DOWNDRAIN

LOCATION		300 mm CSP (2.01 mm THICK)	300 mm Entrance Taper (Type 1, Alternative A)				RSP (Facing, Method B)	RSP FABRIC (Class 8)
		(m)	EA	HMA DIKE FL	OUTLET FL	OUTLET TREATMENT	(m^3)	(m^2)
"P"	STA 160+90.00, 12.89 R+	31.0	1	40.530	38.366	T-DISSIPATOR	1.50	6.3
"P"	STA 161+90.00, 14.39 R+	37.5	1	40.671	38.664	T-DISSIPATOR	1.50	6.3
"P"	STA 167+85.10, 13.76 R+	9.5	1	49.362	46.408	T-DISSIPATOR	1.50	6.3
"P"	STA 169+66.00, 14.30 R+	12.5	1	52.843	48.981	T-DISSIPATOR	1.50	6.3
"RC"	STA 25+50.91, 6.74 L+	7.5	1	11.740	9.750	T-DISSIPATOR	1.50	6.3
"SMC1"	STA 59+64.39, 6.18 L+	6.5	1	42.959	39.788	NONE		
"Moro"	STA 10+61.01, 3.44 L+	6.0	1	94.575	93.337	NONE		
"Moro"	STA 10+80.00, 4.41 L+	6.0	1	95.178	93.963	NONE		
"Moro"	STA 11+50.00, 5.20 L+	5.5	1	98.773	97.752	T-DISSIPATOR	1.50	6.3
"Moro"	STA 12+20.00, 5.20 L+	5.0	1	102.544	101.648	T-DISSIPATOR	1.50	6.3
"Moro"	STA 13+13.94, 5.20 L+	4.5	1	107.355	106.863	T-DISSIPATOR	1.50	6.3
"SN"	STA 187+00.00, 10.80 R+	6.5	1	88.067	86.500	T-DISSIPATOR	1.50	6.3
"SN"	STA 188+51.594, 10.80 R+	6.5	1	90.207	88.000	NONE		
"SN"	STA 194+57.5, 11.70 R+	10.5	1	116.974	115.000	T-DISSIPATOR	1.50	6.3
"EA"	STA 11+35.00, 5.60 R+	13.0	1	134.853	103.922	NONE		
Total		162.0 *	15 *				15.0 *	63.0 *

* Quantity included in Summary of Drainage Quantities on Sheet DQ-63

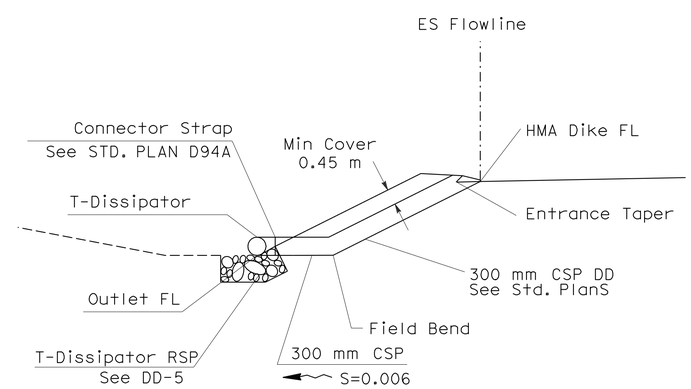

CSP PIPE DOWNDRAIN

ALL DIMENSIONS ARE IN METERS
UNLESS OTHERWISE SHOWN.

DRAINAGE DETAILS

NO SCALE

DD-7

STATE OF CALIFORNIA - DEPARTMENT OF TRANSPORTATION
Caltrans
06-DESIGN

FUNCTIONAL SUPERVISOR: DAVID FRANKE
CALCULATED-DESIGNED BY: CARLOS BLANCAS
CHECKED BY: ERIC OLSON
REVISED BY: D. MASSA
DATE REVISED: 04/01/09

LAST REVISION 05-16-10 DATE PLOTTED => 02-AUG-2010 TIME PLOTTED => 14:03

Dist	COUNTY	ROUTE	KILOMETER POST TOTAL PROJECT	SHEET No.	TOTAL SHEETS
05	Mon	101	R146.8/159.7	562	1402

REGISTERED CIVIL ENGINEER 5-16-10 DATE

7-26-10
PLANS APPROVAL DATE

REGISTERED PROFESSIONAL ENGINEER DANIEL B. MASSA No. 59095 Exp. 6/30/11 CIVIL STATE OF CALIFORNIA

THE STATE OF CALIFORNIA OR ITS OFFICERS OR AGENTS SHALL NOT BE RESPONSIBLE FOR THE ACCURACY OR COMPLETENESS OF ELECTRONIC COPIES OF THIS PLAN SHEET.

Caltrans Metric

LOCATION OF CIPP LINING

STATION	LENGTH OF CSP TO BE LINED	SIZE
"O" 127+70.740, 22.13 Lt - 21.82 Rt	44.0 m *	450 mm
"O" 133+95.500, 16.58 Lt - 18.24 Rt	34.8 m *	450 mm
"P" 157+43.914, 21.78 Lt - 18.00 Rt	39.8 m *	900 mm
"P" 158+51.047, 22.38 Lt - 15.00 Rt	37.4 m *	600 mm
"P" 162+75.69, 22.06 Rt - 16.50 Rt	11.2 m *	750 mm
"P" 168+21.70, 1.25 Lt - 12.65 Lt, 1.24 Rt - 15.44 Rt	25.6 m *	450 mm
"P" 170+64.580, 1.24 Rt - 15.36 Rt	14.1 m *	600 mm

* Quantity included in Summary of Drainage Quantities on Sheet DQ-63

NOTES: 1. For drainage system details see drainage layouts and profiles.

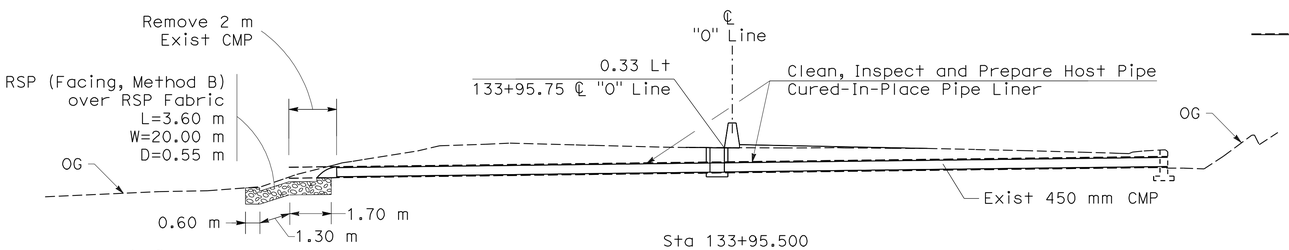

Sta 133+95.500

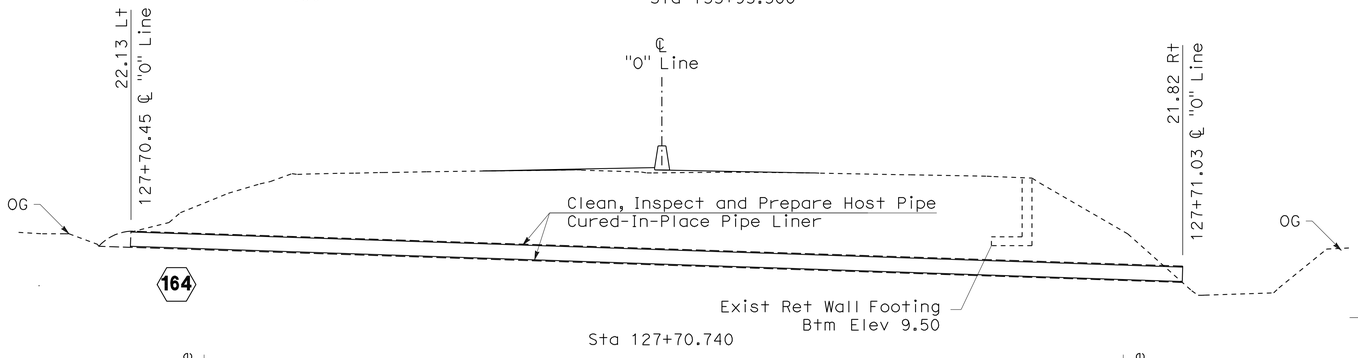

Sta 127+70.740

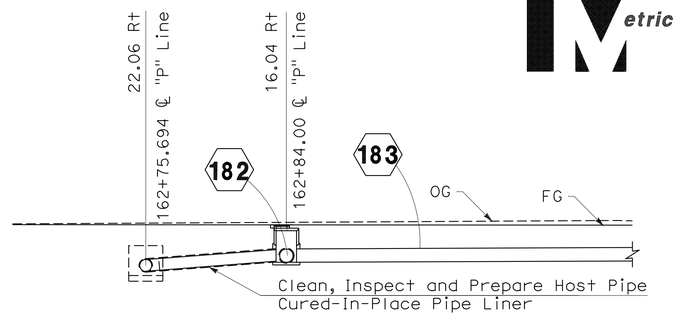

Sta 162+75.69 "P" Line, 16.50 Rt to 22.06 Rt

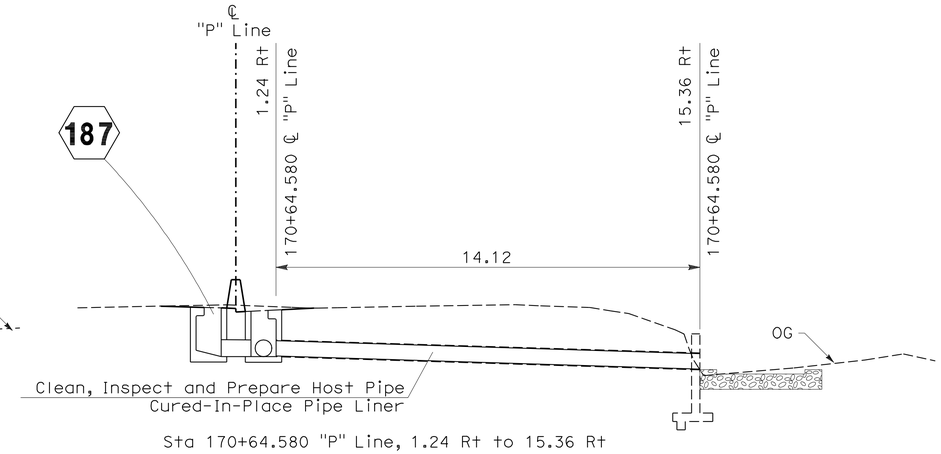

Sta 170+64.580 "P" Line, 1.24 Rt to 15.36 Rt

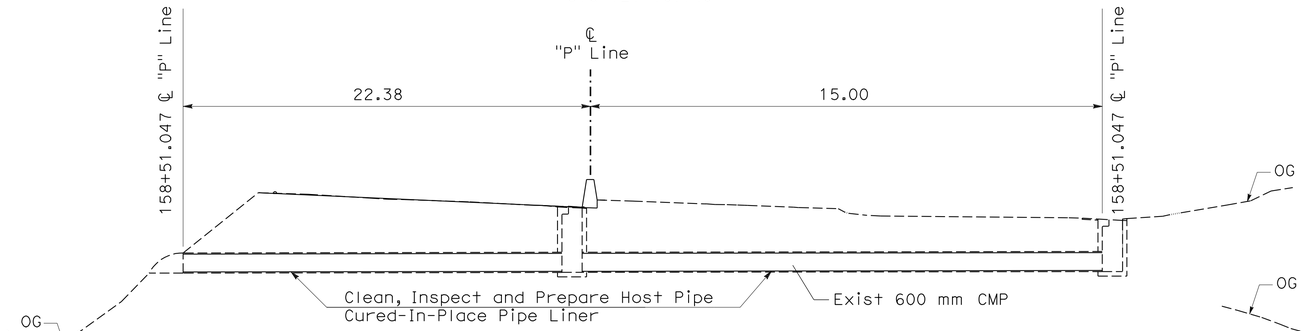

STA "P" 158+51.047, 22.38 Lt to 15.00 Rt

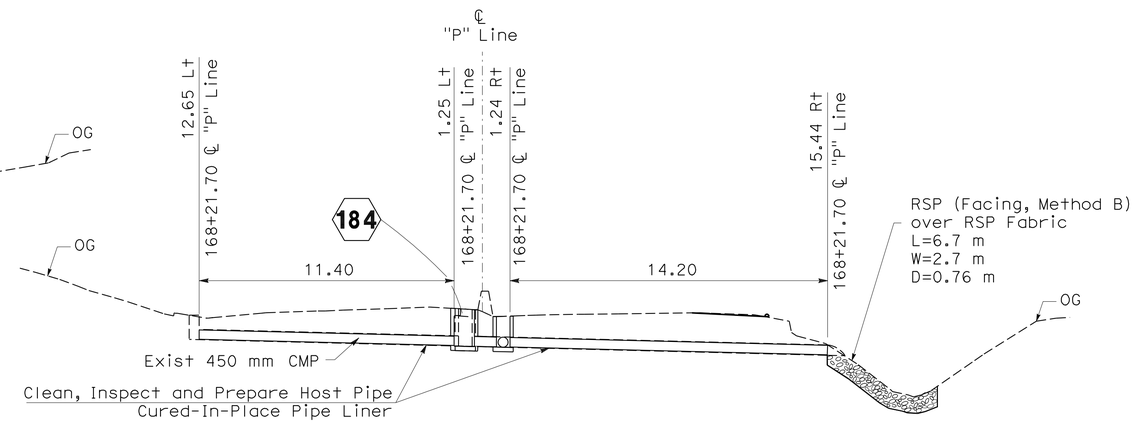

Sta 168+21.70 "P" Line, 1.25 Lt to 12.65 Lt and 1.24 Rt to 15.44 Rt

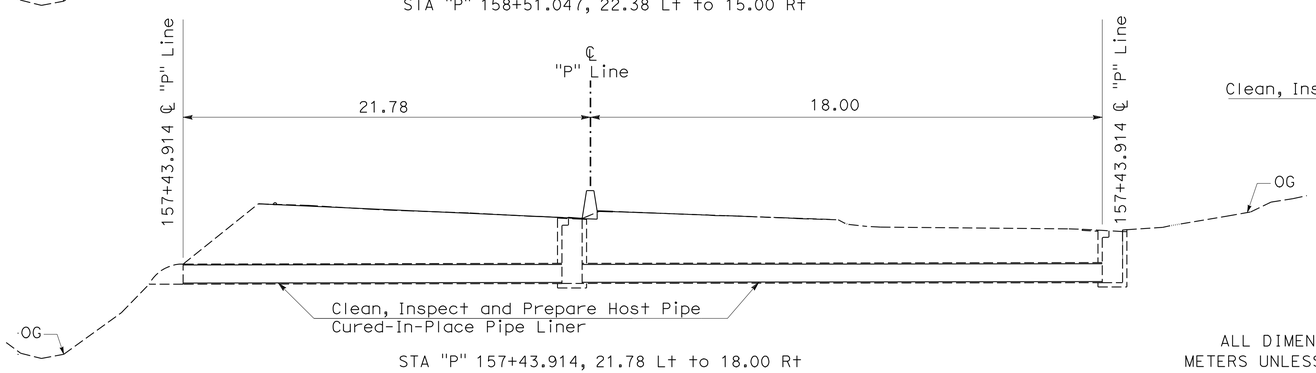

STA "P" 157+43.914, 21.78 Lt to 18.00 Rt

ALL DIMENSIONS ARE IN METERS UNLESS OTHERWISE SHOWN

DRAINAGE DETAILS (CURED-IN-PLACE PIPE LINER)

NO SCALE

DD-8

STATE OF CALIFORNIA - DEPARTMENT OF TRANSPORTATION
Caltrans
06-DESIGN

FUNCTIONAL SUPERVISOR: DAVID FRANKE
CALCULATED-DESIGNED BY: RANDON HOLLAND
CHECKED BY: DAN MASSA
REVISED BY: D. MASSA
DATE REVISED: 04/01/09

LAST REVISION 05-16-10 | DATE PLOTTED => 02-AUG-2010 | TIME PLOTTED => 14:03

Dist	COUNTY	ROUTE	KILOMETER POST TOTAL PROJECT	SHEET No.	TOTAL SHEETS
05	Mon	101	R146.8/159.7	563	1402

Caltrans Metric

REGISTERED CIVIL ENGINEER 5-16-10 DATE

7-26-10
PLANS APPROVAL DATE

REGISTERED PROFESSIONAL ENGINEER DANIEL B. MASSA No. 59095 Exp. 6/30/11 CIVIL STATE OF CALIFORNIA

THE STATE OF CALIFORNIA OR ITS OFFICERS OR AGENTS SHALL NOT BE RESPONSIBLE FOR THE ACCURACY OR COMPLETENESS OF ELECTRONIC COPIES OF THIS PLAN SHEET.

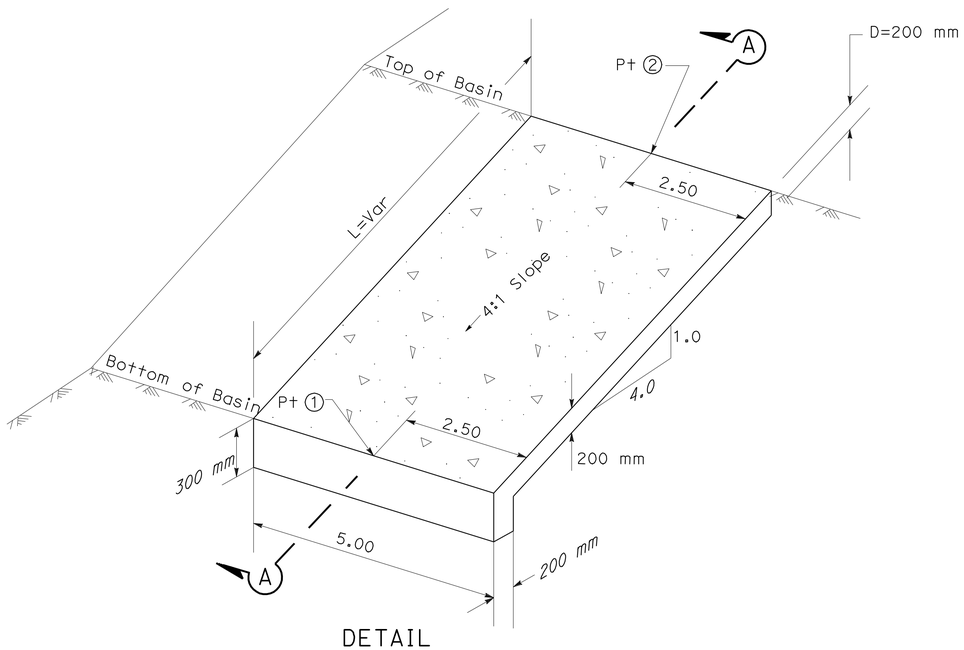

DETAIL

LOCATION OF PCC BASIN MAINTENANCE RAMP

Basin	Pt ① (Sta / Offset / Elev)	Pt ② (Sta / Offset / Elev)	L (m)	MINOR CONCRETE (Misc CONST) (m^3) *
C-1	148+83.61 "M" Line / 63.75 Lt / 31.50	148+83.85 "M" Line / 72.74 Lt / 33.80	9.3	9.45
C-2	148+07.61 "M" Line / 63.72 Lt / 31.00	148+07.37 "M" Line / 72.72 Lt / 33.25	9.3	9.45
C-3	147+53.33 "M" Line / 61.44 Lt / 30.50	147+52.74 "M" Line / 70.42 Lt / 32.75	9.3	9.45
TOTAL			27.9	28.35 *

* Quantity is included on Summary of Drainage Quantity Table on Sheet DQ-63

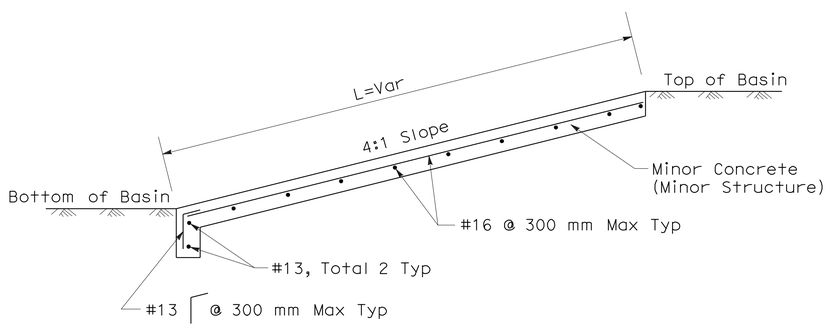

SECTION A-A

PCC BASIN MAINTENANCE RAMP

ALL DIMENSIONS ARE IN METERS
UNLESS OTHERWISE SHOWN.

DRAINAGE DETAILS

NO SCALE **DD-9**

STATE OF CALIFORNIA - DEPARTMENT OF TRANSPORTATION
Caltrans
06-DESIGN

FUNCTIONAL SUPERVISOR: DAVID FRANKE
CALCULATED-DESIGNED BY: MICHEAL ZAMORA
CHECKED BY: DAN MASSA
REVISED BY: M. ZAMORA
DATE REVISED: 04/28/10

LAST REVISION 05-16-10
DATE PLOTTED => 02-AUG-2010
TIME PLOTTED => 14:03

Dist	COUNTY	ROUTE	KILOMETER POST TOTAL PROJECT	SHEET No.	TOTAL SHEETS
05	Mon	101	R146.8/159.7	564	1402

REGISTERED CIVIL ENGINEER 5-16-10 DATE

7-26-10
PLANS APPROVAL DATE

REGISTERED PROFESSIONAL ENGINEER DANIEL B. MASSA No. 59095 Exp. 6/30/11 CIVIL STATE OF CALIFORNIA

THE STATE OF CALIFORNIA OR ITS OFFICERS OR AGENTS SHALL NOT BE RESPONSIBLE FOR THE ACCURACY OR COMPLETENESS OF ELECTRONIC COPIES OF THIS PLAN SHEET.

NOTE:

1. Scupper spacing shall be 6 m along centerline, center to center. Scupper opening length along the centerline is 0.760 m.
2. See Standard Plans for additional concrete barrier details.

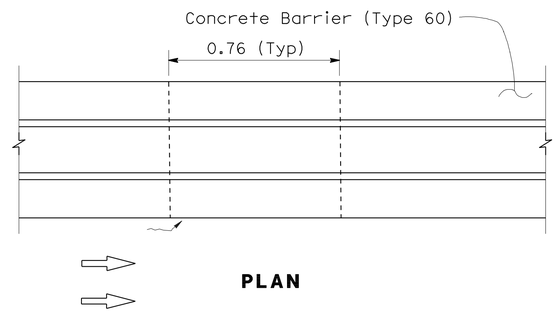

PLAN

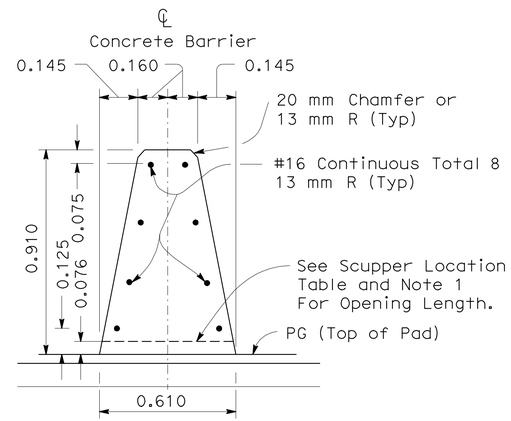

SECTION

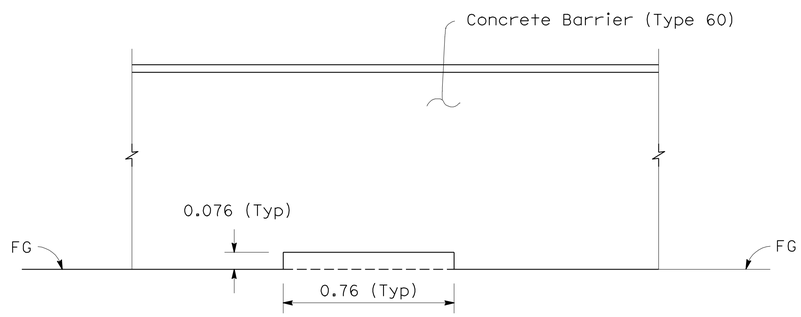

ELEVATION

SCUPPER LOCATIONS

STATION ℄ BARRIER	REMARK
143+20 "M" Line	
↑	Space Scuppers
	At 6.0 Center
↓	To Center
158+50 "M" Line	

CONCRETE BARRIER (TYPE 60) SCUPPER DETAIL

ALL DIMENSIONS ARE IN METERS UNLESS OTHERWISE SHOWN.

DRAINAGE DETAILS

NO SCALE **DD-10**

STATE OF CALIFORNIA - DEPARTMENT OF TRANSPORTATION
Caltrans 06-DESIGN

FUNCTIONAL SUPERVISOR DAVID FRANKE
CALCULATED-DESIGNED BY CARLOS BLANCAS
CHECKED BY DAN MASSA
REVISED BY RRH
DATE REVISED 06/10/09

LAST REVISION 12-29-09 DATE PLOTTED => 02-AUG-2010 TIME PLOTTED => 14:03

Dist	COUNTY	ROUTE	KILOMETER POST TOTAL PROJECT	SHEET No.	TOTAL SHEETS
05	Mon	101	R146.8/159.7	565	1402

REGISTERED CIVIL ENGINEER — DATE 5-16-10

7-26-10
PLANS APPROVAL DATE

REGISTERED PROFESSIONAL ENGINEER — DANIEL B. MASSA — No. 59095 — Exp. 6/30/11 — CIVIL — STATE OF CALIFORNIA

THE STATE OF CALIFORNIA OR ITS OFFICERS OR AGENTS SHALL NOT BE RESPONSIBLE FOR THE ACCURACY OR COMPLETENESS OF ELECTRONIC COPIES OF THIS PLAN SHEET.

NOTE :
Use Class II RCP
Eccentric Cone & Shaft

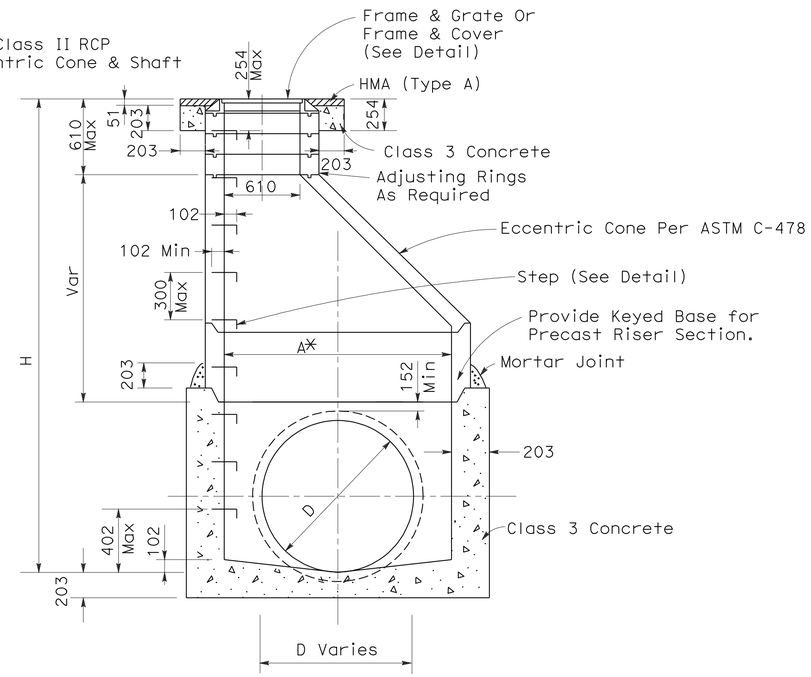

SECTION A-A

* Standard Manhole
Case I A=1219 mm
Case II A=1524 mm
Case III A=1829 mm
Case IV A=2134 mm

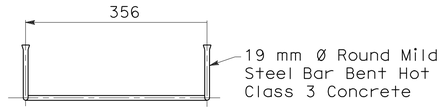

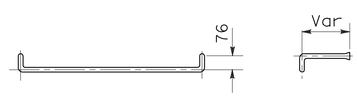

STEP DETAIL

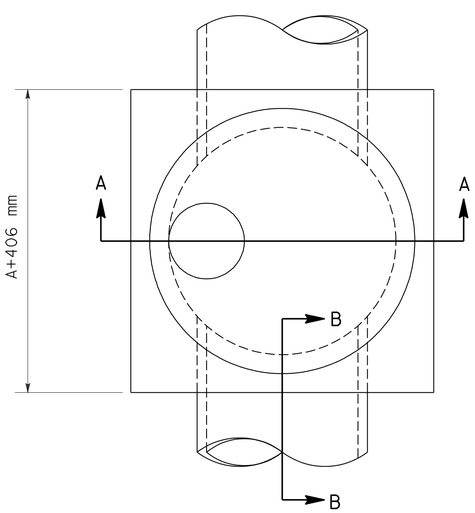

PLAN

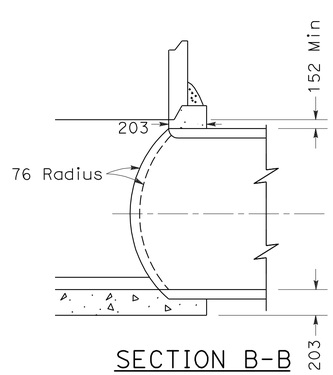

SECTION B-B

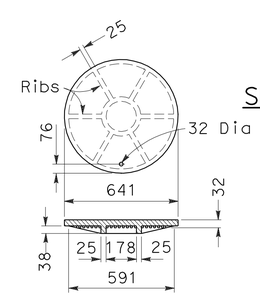

COVER

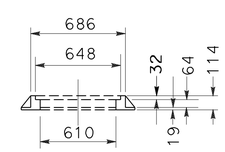

SECTION OF FRAME

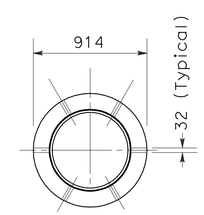

PLAN OF FRAME

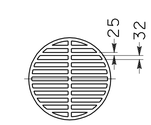

PLAN OF GRATE

NOTES:

1. An alternate step may be used subject to the approval of the engineer.
2. All steps shall be firmly and rigidly set with epoxy grout or epoxy.
3. Steps shall be galvenized after bending.
4. In manholes with lateral line connections, the steps shall be placed in the wall with no laterals Or the wall with the least diameter lateral, such that a continuous vertical alignment of steps may be achieved.
5. Manhole cover design, as a minimum, is to have the words "Storm Sewer" or "Storm Drain" molded into the cover.
6. All joints between precast sections shall be mortared.
7. Interior of the manhole shall have a smooth troweled surface.
8. Eccentric cones in paved areas shalll be oriented to place & covers away from wheel tracks.

PLAN OF FRAME

MANHOLE (TYPE A)
ECCENTRIC

ALL DIMENSIONS ARE IN MILLIMETERS
UNLESS OTHERWISE SHOWN.

DRAINAGE DETAILS

NO SCALE

DD-11

STATE OF CALIFORNIA - DEPARTMENT OF TRANSPORTATION
Caltrans
06-DESIGN
FUNCTIONAL SUPERVISOR: DAVID FRANKE
CALCULATED-DESIGNED BY: MICHEAL ZAMORA
CHECKED BY: DAN MASSA
REVISED BY: D. MASSA
DATE REVISED: 04/01/09

LAST REVISION 02-23-10
DATE PLOTTED => 02-AUG-2010
TIME PLOTTED => 14:03

Dist	COUNTY	ROUTE	KILOMETER POST TOTAL PROJECT	SHEET No.	TOTAL SHEETS
05	Mon	101	R146.8/159.7	566	1402

REGISTERED CIVIL ENGINEER 5-16-10 DATE

7-26-10
PLANS APPROVAL DATE

REGISTERED PROFESSIONAL ENGINEER DANIEL B. MASSA No. 59095 Exp. 6/30/11 CIVIL STATE OF CALIFORNIA

THE STATE OF CALIFORNIA OR ITS OFFICERS OR AGENTS SHALL NOT BE RESPONSIBLE FOR THE ACCURACY OR COMPLETENESS OF ELECTRONIC COPIES OF THIS PLAN SHEET.

Caltrans Metric

* Standard Manhole

Case I	A=1219 mm
Case II	A=1524 mm
Case III	A=1829 mm
Case IV	A=2134 mm

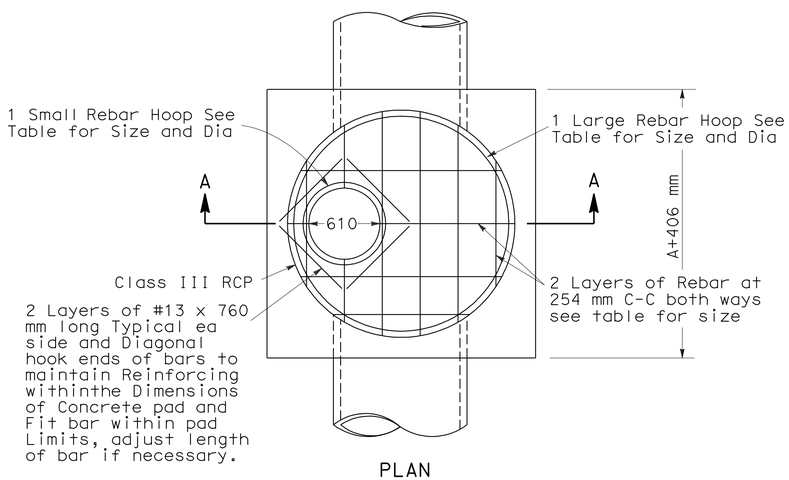

PLAN

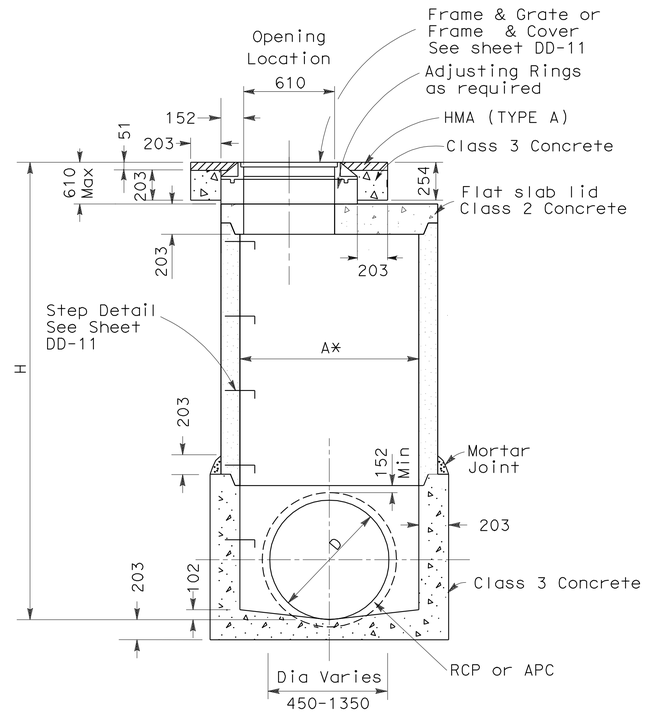

SECTION A-A

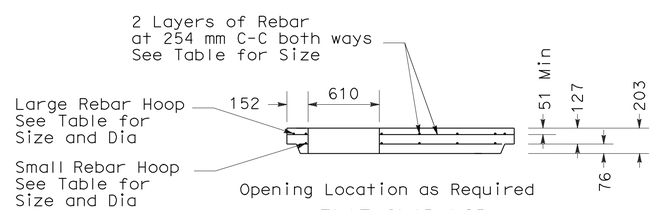

FLAT SLAB LID

Manhole Dia	Grid Bar Size	Hoop Bar Size	Small Hoop Dia	Large Hoop Dia
1219	13	13	711	1372
1524	13	13	711	1728
1829	13	13	711	1983
2134	16	16	711	2270

NOTES:

1. The manhole frame and cover shall be made of cast iron.
2. Steps shall be installed when manhole height exceeds 750 mm. Install steps with lowest rung 400 mm above the floor and highest rung not more than 250 mm below top of cover. The distance between steps shall not exceed 300 mm and shall be uniform throughout the height of the manhole. Steps shall be placed directly below manhole frame and cover.
3. An alternate step may be used subject to the approval of the Engineer.
4. All steps shall be firmly and rigidly set with epoxy grout or epoxy.
5. Steps shall be galvanized after bending.
6. Manhole cover design, as a minimum, is to have the words "Storm Sewer" or "Storm Drain" molded into the cover.
7. Interior of the manhole shall have a smooth troweled surface.
8. Flat slab lids shall be oriented to place frames & covers away from wheel tracks.
9. All joints between precast sections shall be mortared.
10. Precast pipe, adjusting rings, and flat slab lids should be constructed in accordance with American Society for Testing and Materials C-478M.

ALL DIMENSIONS ARE IN MILLIMETERS UNLESS OTHERWISE SHOWN.

DRAINAGE DETAILS

MANHOLE (TYPE B) SHALLOW

NO SCALE

DD-12

REVISED BY	D. MASSA
DATE REVISED	04/01/09
CALCULATED-DESIGNED BY	MICHEAL ZAMORA
CHECKED BY	DAN MASSA
FUNCTIONAL SUPERVISOR	DAVID FRANKE

STATE OF CALIFORNIA - DEPARTMENT OF TRANSPORTATION
Caltrans 06-DESIGN

LAST REVISION 02-23-10 | DATE PLOTTED => 02-AUG-2010 | TIME PLOTTED => 14:04

Dist	COUNTY	ROUTE	KILOMETER POST TOTAL PROJECT	SHEET No.	TOTAL SHEETS
05	Mon	101	R146.8/159.7	567	1402

REGISTERED CIVIL ENGINEER 5-16-10 DATE

7-26-10
PLANS APPROVAL DATE

REGISTERED PROFESSIONAL ENGINEER DANIEL B. MASSA No. 59095 Exp. 6/30/11 CIVIL STATE OF CALIFORNIA

THE STATE OF CALIFORNIA OR ITS OFFICERS OR AGENTS SHALL NOT BE RESPONSIBLE FOR THE ACCURACY OR COMPLETENESS OF ELECTRONIC COPIES OF THIS PLAN SHEET.

Caltrans Metric

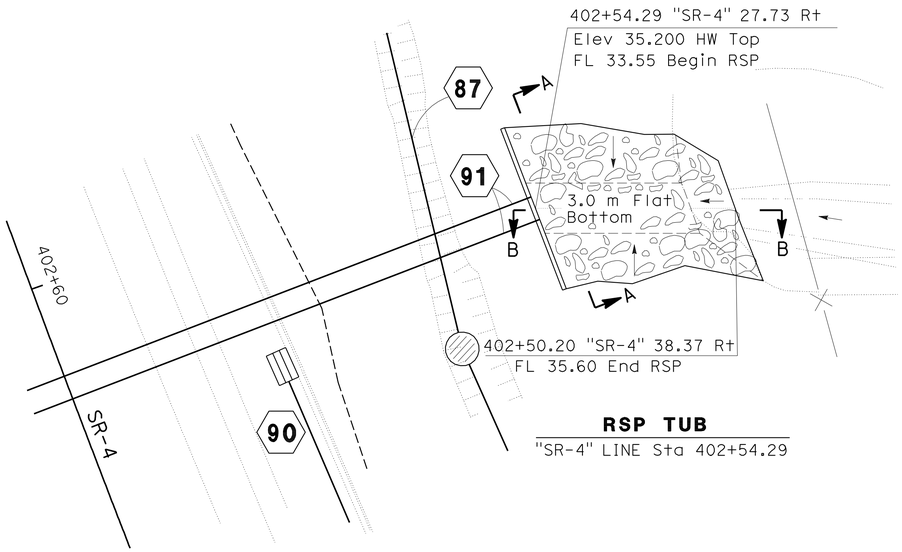

RSP TUB
"SR-4" LINE Sta 402+54.29

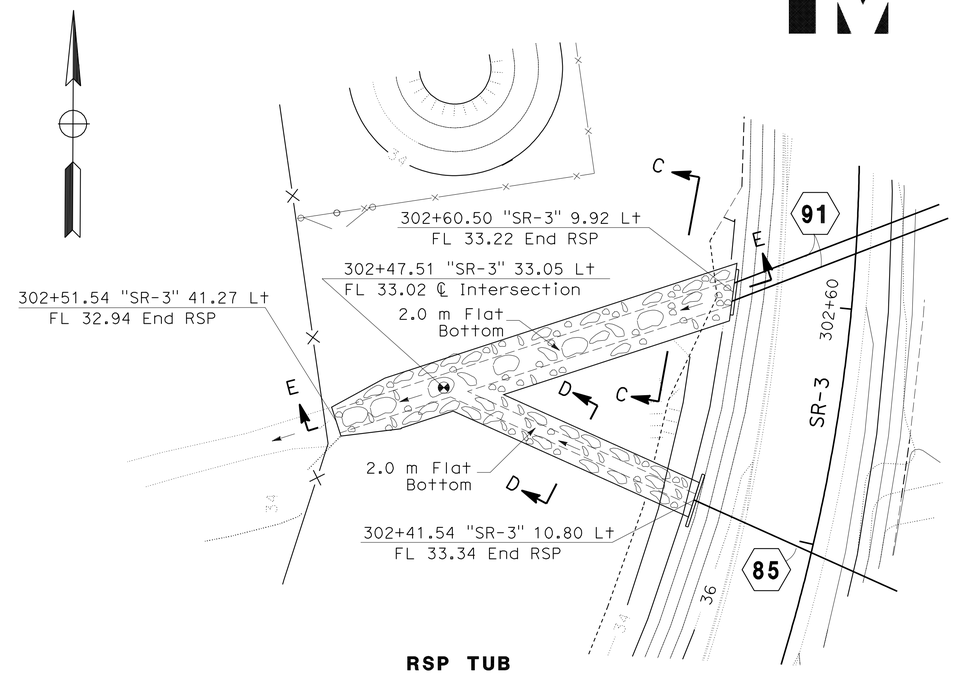

RSP TUB
"SR-3" LINE Sta 302+41.54
"SR-3" LINE Sta 302+60.50

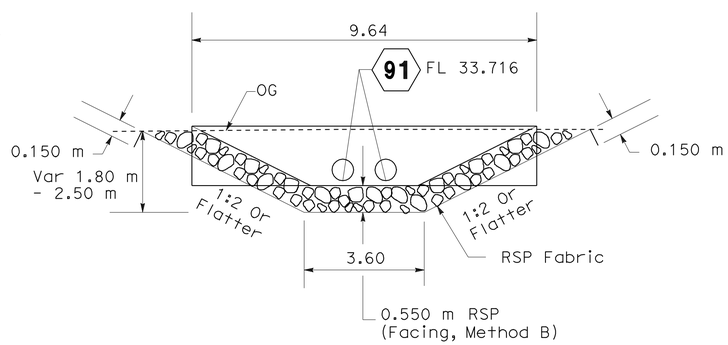

SECTION A-A

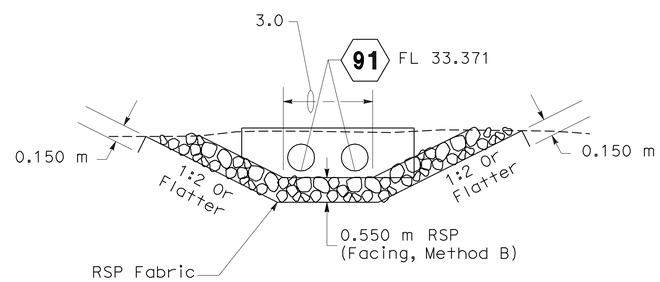

SECTION C-C

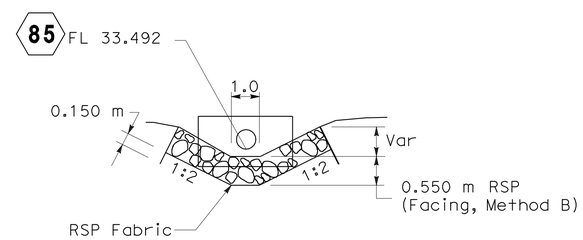

SECTION D-D

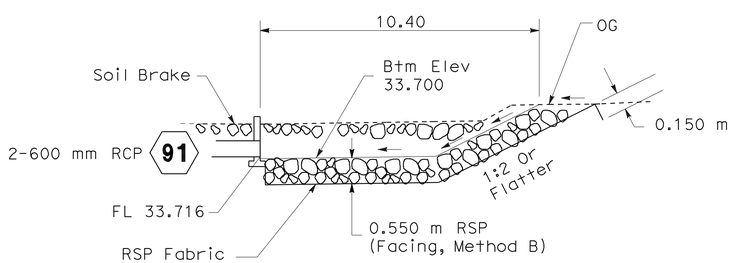

SECTION B-B

ALL DIMENSIONS ARE IN METERS UNLESS OTHERWISE SHOWN.

DRAINAGE DETAILS DD-13

NO SCALE

RSP TUB

STATE OF CALIFORNIA - DEPARTMENT OF TRANSPORTATION
Caltrans
06-DESIGN

FUNCTIONAL SUPERVISOR DAVID FRANKE
CALCULATED-DESIGNED BY MICHAEL ZAMORA
CHECKED BY DAN MASSA
REVISED BY M. ZAMORA
DATE REVISED 04/26/10

LAST REVISION 05-16-10
DATE PLOTTED => 02-AUG-2010
TIME PLOTTED => 14:04

Dist	COUNTY	ROUTE	KILOMETER POST TOTAL PROJECT	SHEET No.	TOTAL SHEETS
05	Mon	101	R146.8/159.7	568	1402

Caltrans Metric

REGISTERED CIVIL ENGINEER 5-16-10 DATE

7-26-10
PLANS APPROVAL DATE

REGISTERED PROFESSIONAL ENGINEER DANIEL B. MASSA No. 59095 Exp. 6/30/11 CIVIL STATE OF CALIFORNIA

THE STATE OF CALIFORNIA OR ITS OFFICERS OR AGENTS SHALL NOT BE RESPONSIBLE FOR THE ACCURACY OR COMPLETENESS OF ELECTRONIC COPIES OF THIS PLAN SHEET.

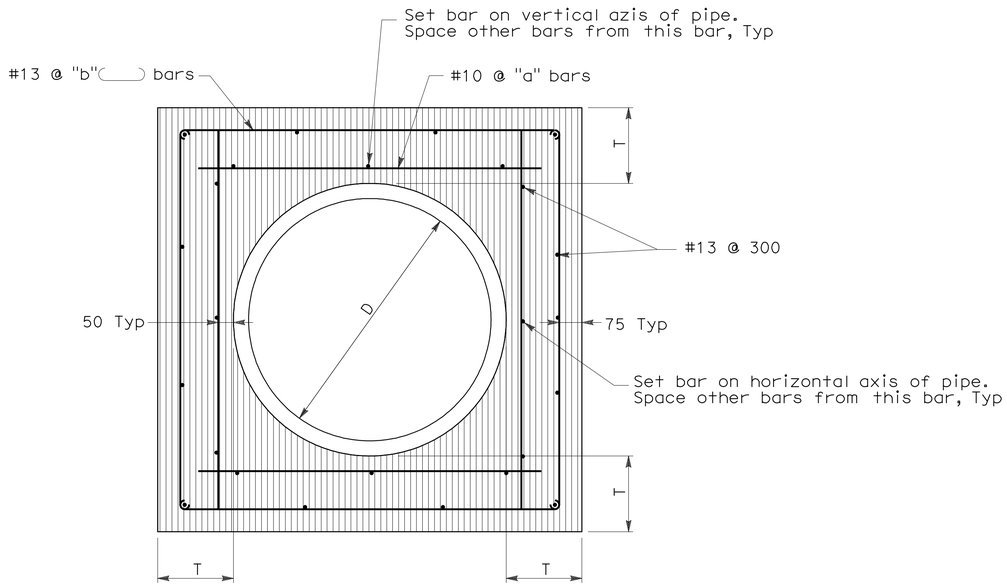

SECTION A-A

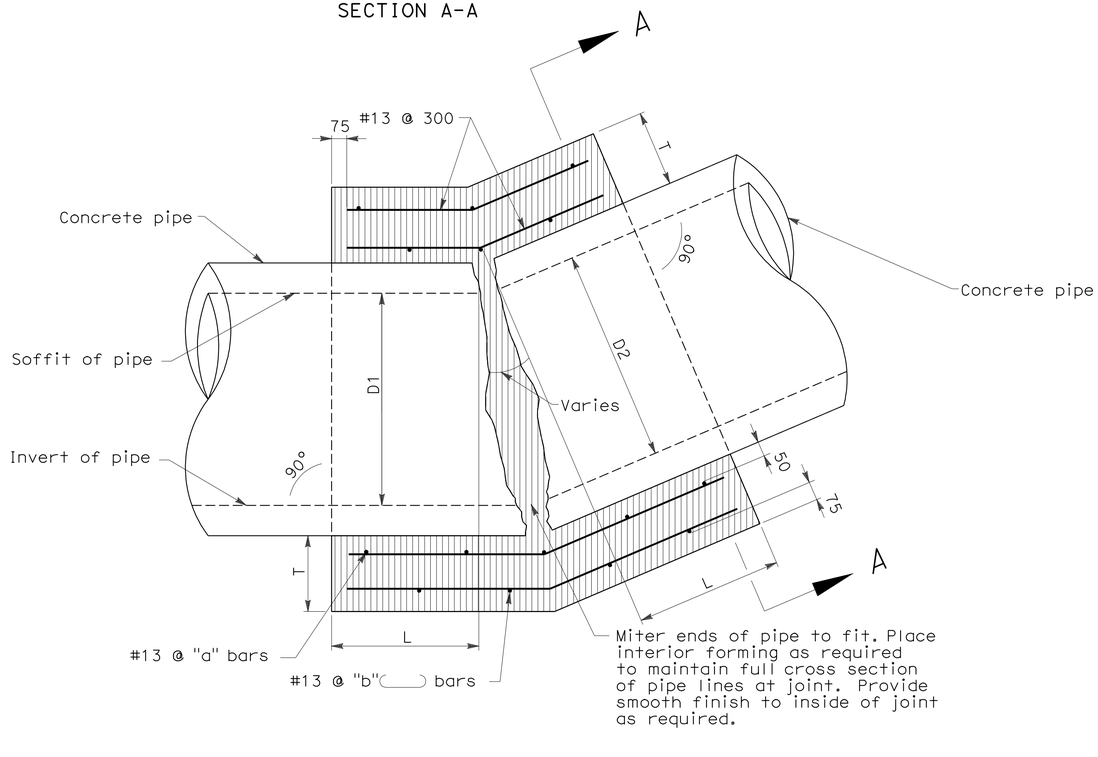

CONCRETE COLLAR

TABLE A

D mm	L mm	T mm	"a" mm	"b" mm
300	300	100	@ 300	@ 300
450	300	130	@ 300	@ 300
600	300	150	@ 300	@ 300
900	450	250	@ 300	@ 300
1050	450	250	@ 300	@ 300
1200	450	250	@ 300	@ 300
1500	530	280	@ 300	@ 300
1800	600	300	@ 150	@ 150

NOTES:

1. Where pipe of different diameters are joined with a concrete collar, "L" shall be that of the larger pipe. D=D1 or D2 whichever is greater.
2. Join pipes at inverts where the slope of the downstream pipe is greater than the slope of the upstream pipe. Join pipes at soffit where the slope of the upstream pipe is greater than the slope of the downstream pipe.
3. "b" bars to be locked around longitudunal reinforcement. Rotate bars as necessary.
4. Concrete collar shown is adequate for up to 12 m of fill and pipe diameters less than 1800 mm.
5. For pipe size not listed use next larger.

ALL DIMENSIONS ARE IN MILIMITERS UNLESS OTHERWISE SHOWN.

DRAINAGE DETAILS

NO SCALE

DD-14

STATE OF CALIFORNIA - DEPARTMENT OF TRANSPORTATION
Caltrans
06-DESIGN

FUNCTIONAL SUPERVISOR: DAVID FRANKE
CALCULATED-DESIGNED BY: CARLOS BLANCAS
CHECKED BY: DAN MASSA
REVISED BY: D. MASSA
DATE REVISED: 04/01/09

LAST REVISION 04-06-10 | DATE PLOTTED => 02-AUG-2010 | TIME PLOTTED => 14:04

Dist	COUNTY	ROUTE	KILOMETER POST TOTAL PROJECT	SHEET No.	TOTAL SHEETS
05	Mon	101	R146.8/159.7	569	1402

Caltrans Metric

Eric Olson 5-16-10
REGISTERED CIVIL ENGINEER DATE

7-26-10
PLANS APPROVAL DATE

REGISTERED PROFESSIONAL ENGINEER ERIC H. OLSON No. 60801 Exp. 12/31/10 CIVIL STATE OF CALIFORNIA

THE STATE OF CALIFORNIA OR ITS OFFICERS OR AGENTS SHALL NOT BE RESPONSIBLE FOR THE ACCURACY OR COMPLETENESS OF ELECTRONIC COPIES OF THIS PLAN SHEET.

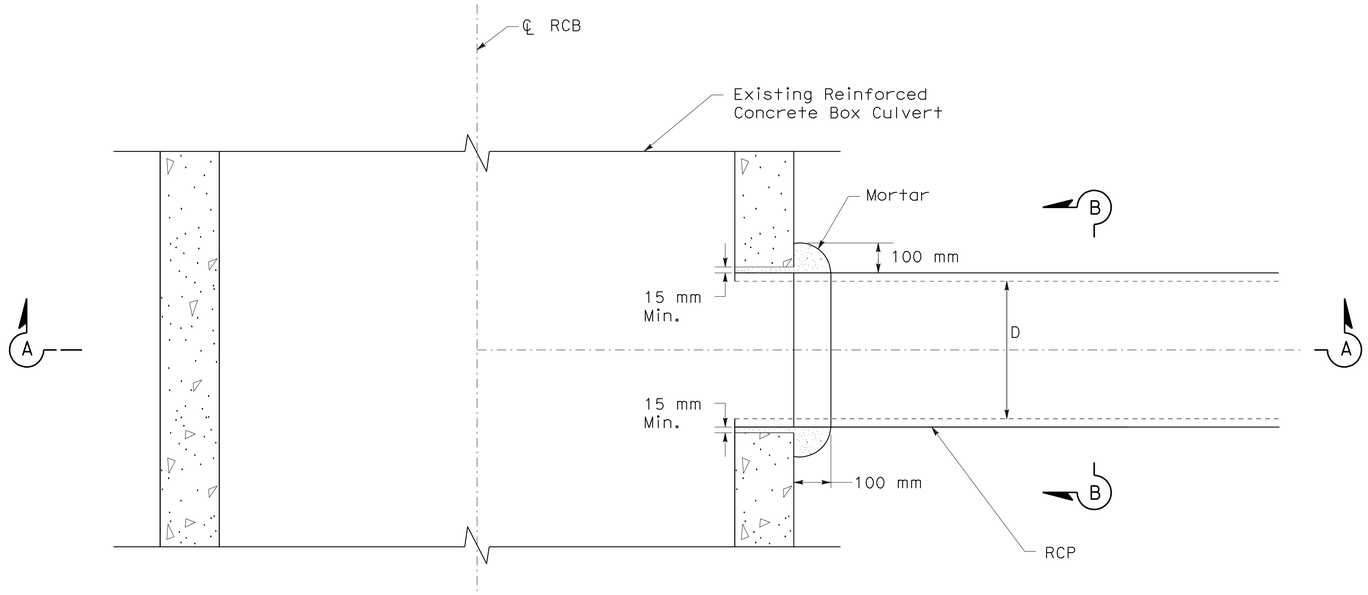

PLAN

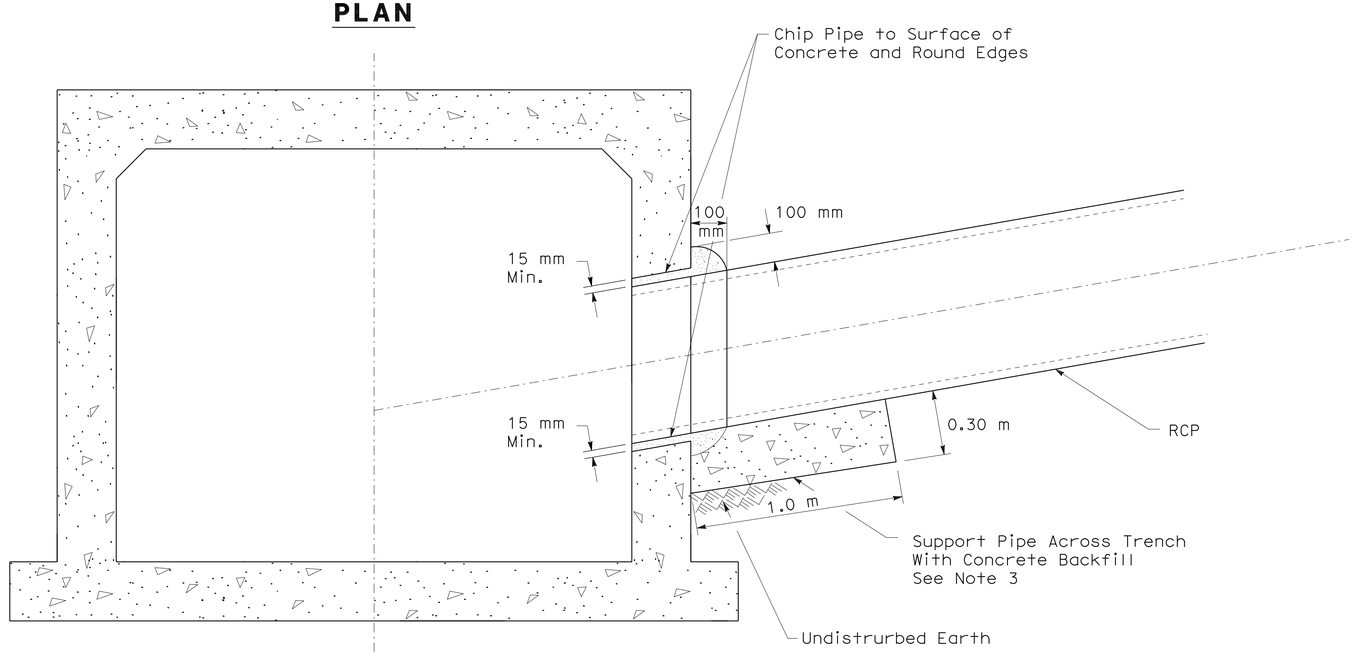

SECTION A-A

NOTES:

1. Inside diameter D of the connector pipe shall not be greater than 610 mm.
2. The minimum opening into the RCB culvert shall be the outside diameter of the connecting pipe plus 30 mm. The concrete backfill supporting the connecting pipe may be omitted if the pipe is laid on undisturbed earth to storm drain wall.
3. Connector pipes shall not be more than 1.5 m above the invert.

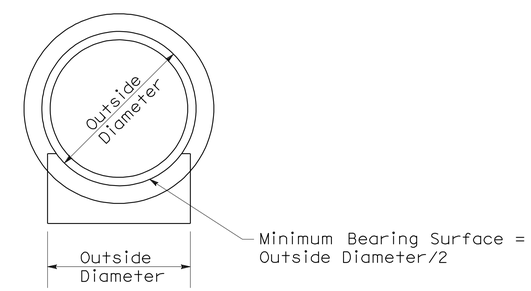

SECTION B-B

PIPE CONNECTION TO EXISTING RCB CULVERT

D = 600 mm Max.

ALL DIMENSIONS ARE IN METERS UNLESS OTHERWISE SHOWN.

DRAINAGE DETAILS

NO SCALE **DD-15**

STATE OF CALIFORNIA - DEPARTMENT OF TRANSPORTATION
Caltrans 06-DESIGN

FUNCTIONAL SUPERVISOR DAVID FRANKE
CALCULATED-DESIGNED BY CARLOS BLANCAS
CHECKED BY DAN MASSA
REVISED BY D. MASSA
DATE REVISED 05/06/09

LAST REVISION 02-23-10 DATE PLOTTED => 02-AUG-2010 TIME PLOTTED => 14:04

Dist	COUNTY	ROUTE	KILOMETER POST TOTAL PROJECT	SHEET No.	TOTAL SHEETS
05	Mon	101	R146.8/159.7	570	1402

REGISTERED CIVIL ENGINEER 5-16-10 DATE

7-26-10
PLANS APPROVAL DATE

REGISTERED PROFESSIONAL ENGINEER ROY J. SHAVER No. 44587 Exp. 3/31/12 CIVIL STATE OF CALIFORNIA

THE STATE OF CALIFORNIA OR ITS OFFICERS OR AGENTS SHALL NOT BE RESPONSIBLE FOR THE ACCURACY OR COMPLETENESS OF ELECTRONIC COPIES OF THIS PLAN SHEET.

Caltrans Metric

NOTE THIS PAGE ONLY:

1. Use transition both ends when in sump condition and water is entering on both sides.
2. All metal parts to be galvanized after fabrication.
3. Reinforcing steel in all sides.
   Use #13 Bars @ 450 mm O.C.

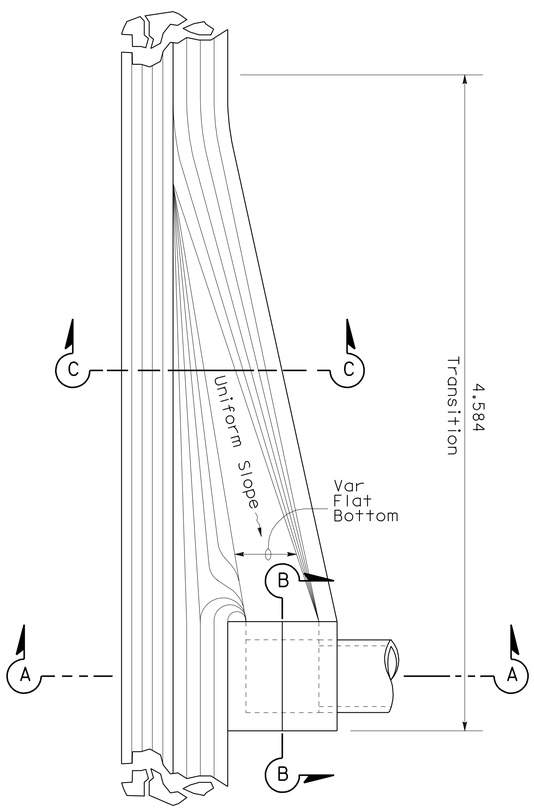

PLAN

CATCH BASIN (TYPE C)

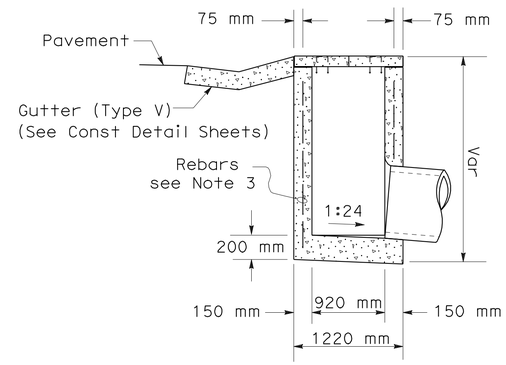

SECTION A-A

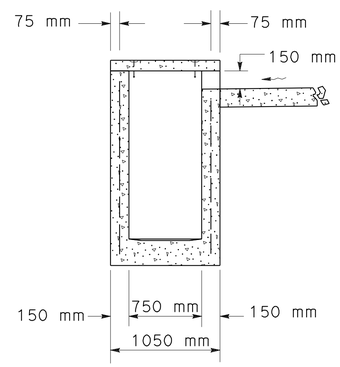

SECTION B-B

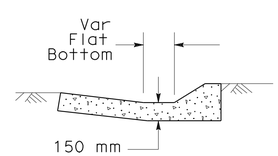

SECTION C-C

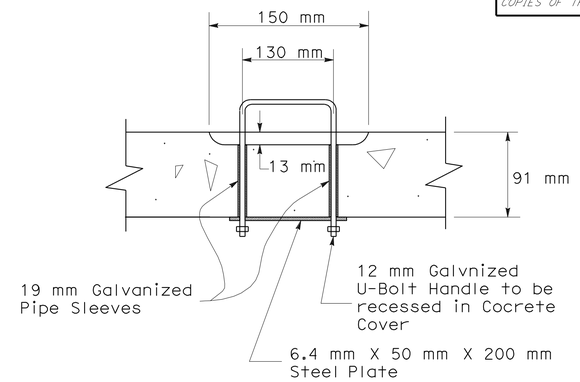

HANDLE DETAIL

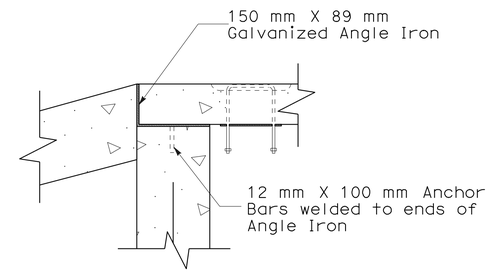

ANGLE IRON PLACEMENT DETAIL

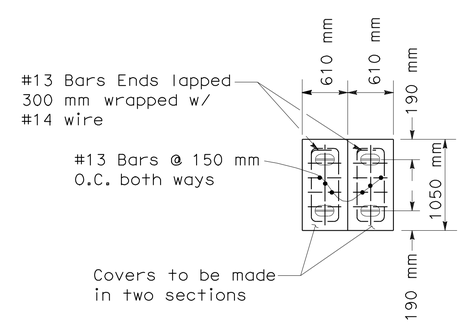

PLAN

COVERS

ALL DIMENSIONS ARE IN METERS
UNLESS OTHERWISE SHOWN.

DRAINAGE DETAILS

NO SCALE **DD-16**

STATE OF CALIFORNIA - DEPARTMENT OF TRANSPORTATION
Caltrans 06-DESIGN

FUNCTIONAL SUPERVISOR DAVID FRANKE
CALCULATED-DESIGNED BY ROY J. SHAVER
CHECKED BY RITCHIE F. FERRER
REVISED BY D. MASSA
DATE REVISED 04/01/09

LAST REVISION 05-06-10 DATE PLOTTED => 02-AUG-2010 TIME PLOTTED => 14:04

Dist	COUNTY	ROUTE	KILOMETER POST TOTAL PROJECT	SHEET No.	TOTAL SHEETS
05	Mon	101	R146.8/159.7	571	1402

Caltrans Metric

REGISTERED CIVIL ENGINEER — DATE 5-16-10

7-26-10
PLANS APPROVAL DATE

REGISTERED PROFESSIONAL ENGINEER — DANIEL B. MASSA No. 59095 Exp. 6/30/11 CIVIL — STATE OF CALIFORNIA

THE STATE OF CALIFORNIA OR ITS OFFICERS OR AGENTS SHALL NOT BE RESPONSIBLE FOR THE ACCURACY OR COMPLETENESS OF ELECTRONIC COPIES OF THIS PLAN SHEET.

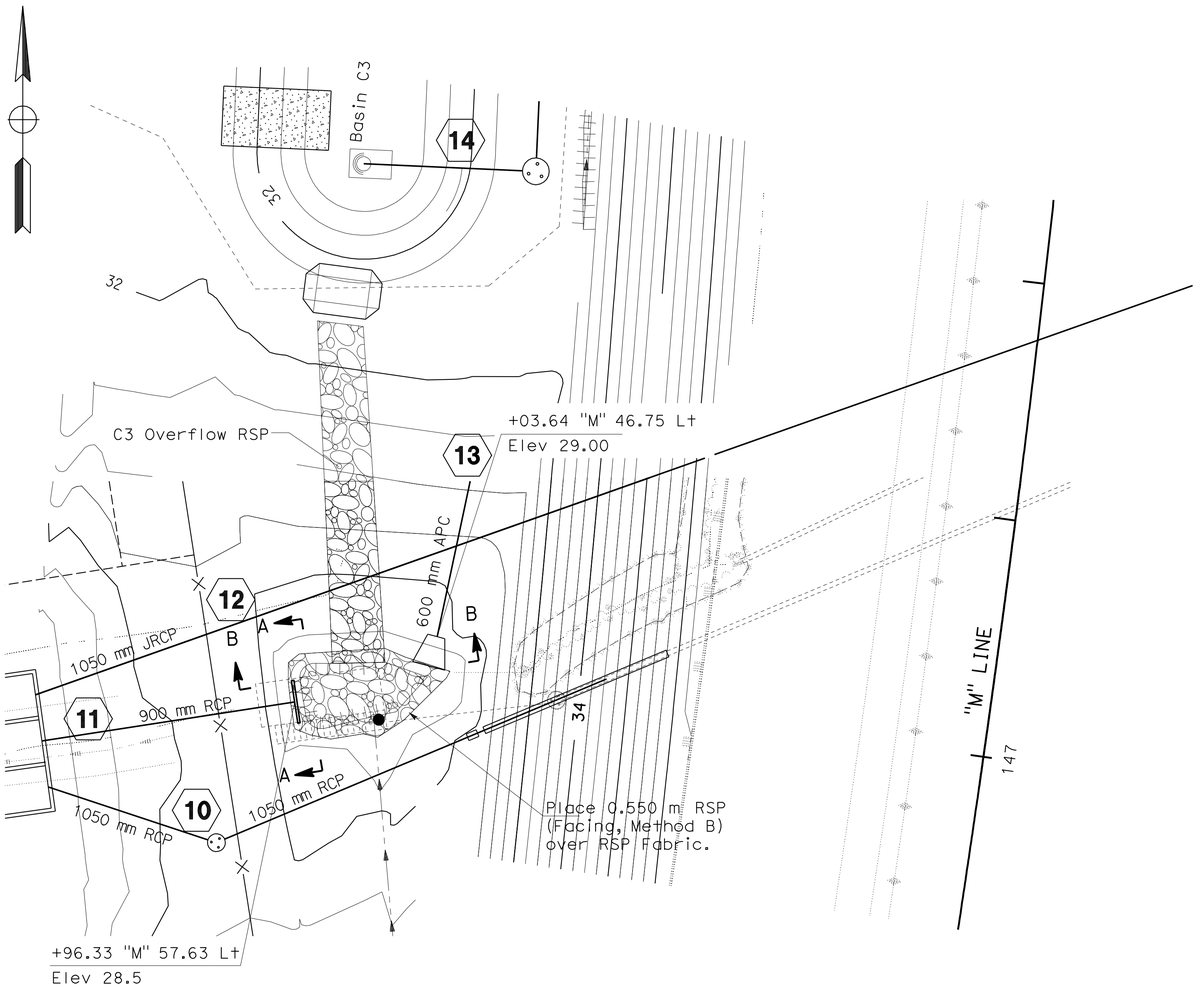

RSP DETAIL

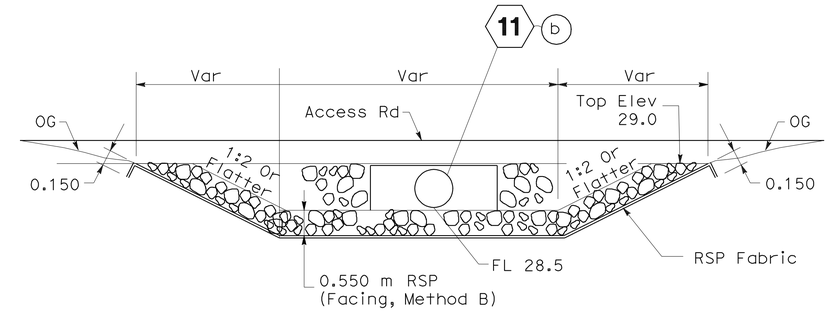

SECTION A-A

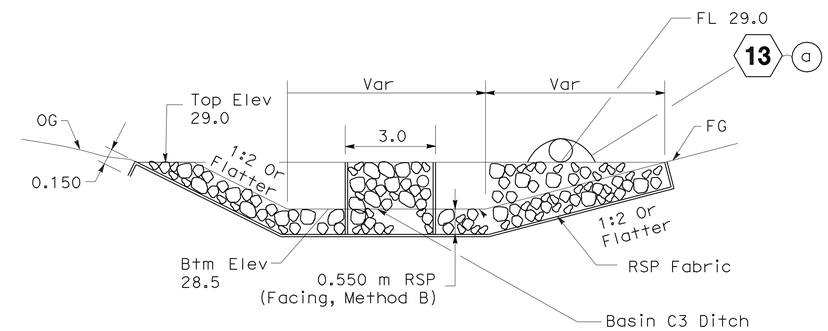

SECTION B-B

ALL DIMENSIONS ARE IN METERS
UNLESS OTHERWISE SHOWN.

DRAINAGE DETAILS

NO SCALE

DD-17

STATE OF CALIFORNIA - DEPARTMENT OF TRANSPORTATION
Caltrans
06-DESIGN

FUNCTIONAL SUPERVISOR: DAVID FRANKE
CALCULATED-DESIGNED BY: JOHNNY SOLANO
CHECKED BY: DAN MASSA
REVISED BY: D. MASSA
DATE REVISED: 05/06/09

LAST REVISION 05-16-10
DATE PLOTTED => 02-AUG-2010
TIME PLOTTED => 14:47

Dist	COUNTY	ROUTE	KILOMETER POST TOTAL PROJECT	SHEET No.	TOTAL SHEETS
05	Mon	101	R146.8/159.7	572	1402

REGISTERED CIVIL ENGINEER — DATE 5-16-10

PLANS APPROVAL DATE 7-26-10

REGISTERED PROFESSIONAL ENGINEER — DANIEL B. MASSA — No. 59095 — Exp. 6/30/11 — CIVIL — STATE OF CALIFORNIA

THE STATE OF CALIFORNIA OR ITS OFFICERS OR AGENTS SHALL NOT BE RESPONSIBLE FOR THE ACCURACY OR COMPLETENESS OF ELECTRONIC COPIES OF THIS PLAN SHEET.

Caltrans Metric

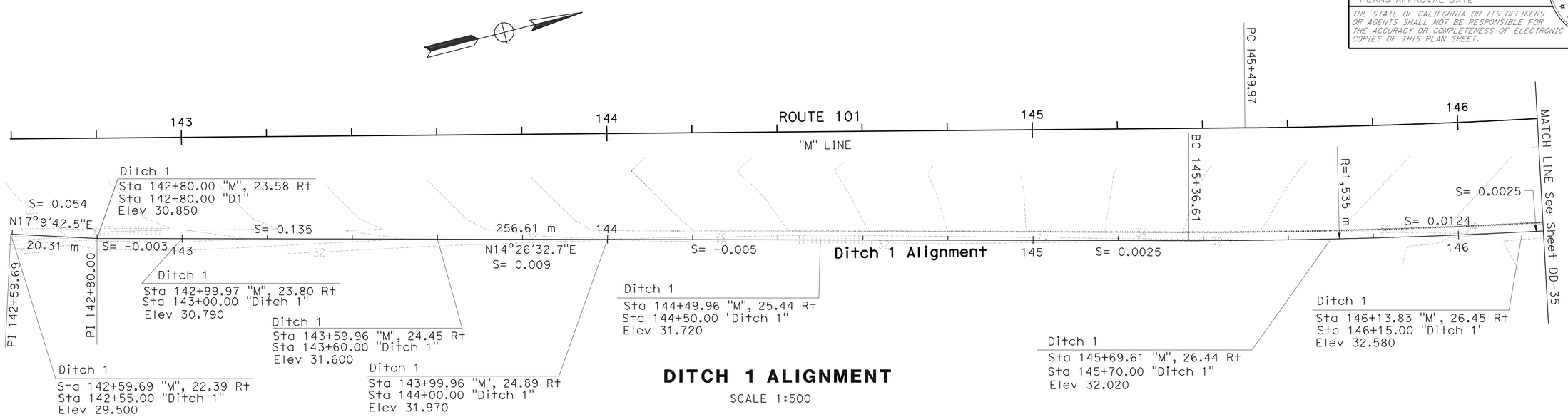

DITCH 1 ALIGNMENT

SCALE 1:500

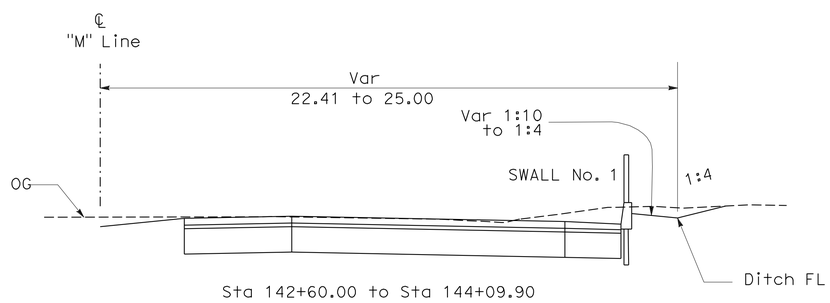

Sta 142+60.00 to Sta 144+09.90

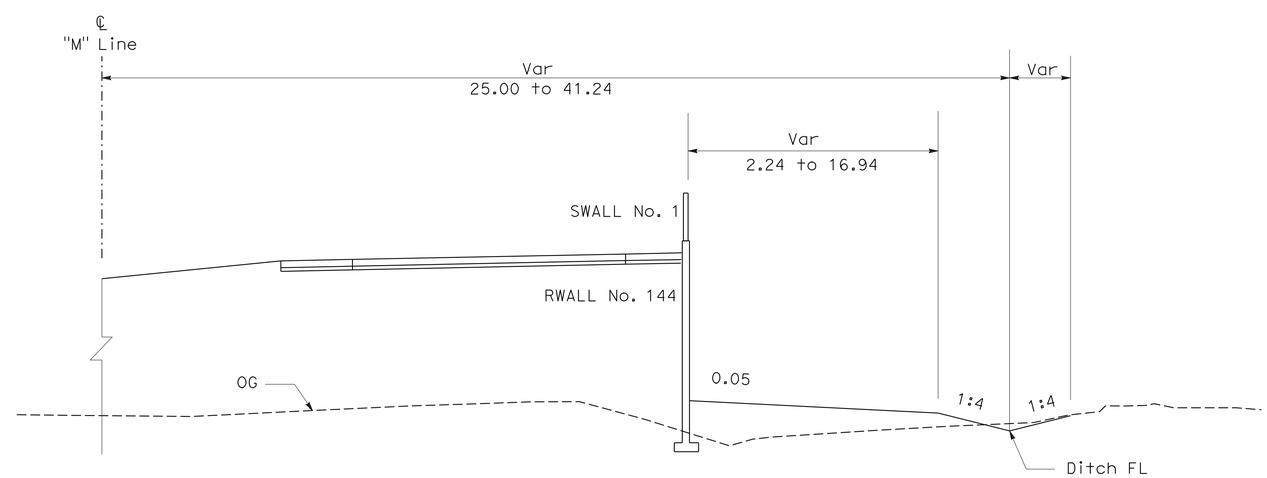

Sta 144+10.00 to Sta 147+40.00

DITCH 1 TYPICAL CROSS SECTIONS

DITCH 1 DETAILS

NO SCALE

ALL DIMENSIONS ARE IN METERS UNLESS OTHERWISE SHOWN.

DRAINAGE DETAILS DD-18

SCALE AS SHOWN

STATE OF CALIFORNIA - DEPARTMENT OF TRANSPORTATION — Caltrans — 06-DESIGN

FUNCTIONAL SUPERVISOR: DAVID FRANKE

CALCULATED-DESIGNED BY: MICHAEL ZAMORA — CHECKED BY: DAN MASSA

REVISED BY: M. ZAMORA — DATE REVISED: 04/12/10

LAST REVISION 04-012-1 — DATE PLOTTED => 02-AUG-2010 — TIME PLOTTED => 14:32

Dist	COUNTY	ROUTE	KILOMETER POST TOTAL PROJECT	SHEET No.	TOTAL SHEETS
05	Mon	101	R146.8/159.7	573	1402

REGISTERED CIVIL ENGINEER — DATE 5-16-10

7-26-10
PLANS APPROVAL DATE

REGISTERED PROFESSIONAL ENGINEER — DANIEL B. MASSA No. 59095 Exp. 6/30/11 CIVIL — STATE OF CALIFORNIA

THE STATE OF CALIFORNIA OR ITS OFFICERS OR AGENTS SHALL NOT BE RESPONSIBLE FOR THE ACCURACY OR COMPLETENESS OF ELECTRONIC COPIES OF THIS PLAN SHEET.

Caltrans Metric

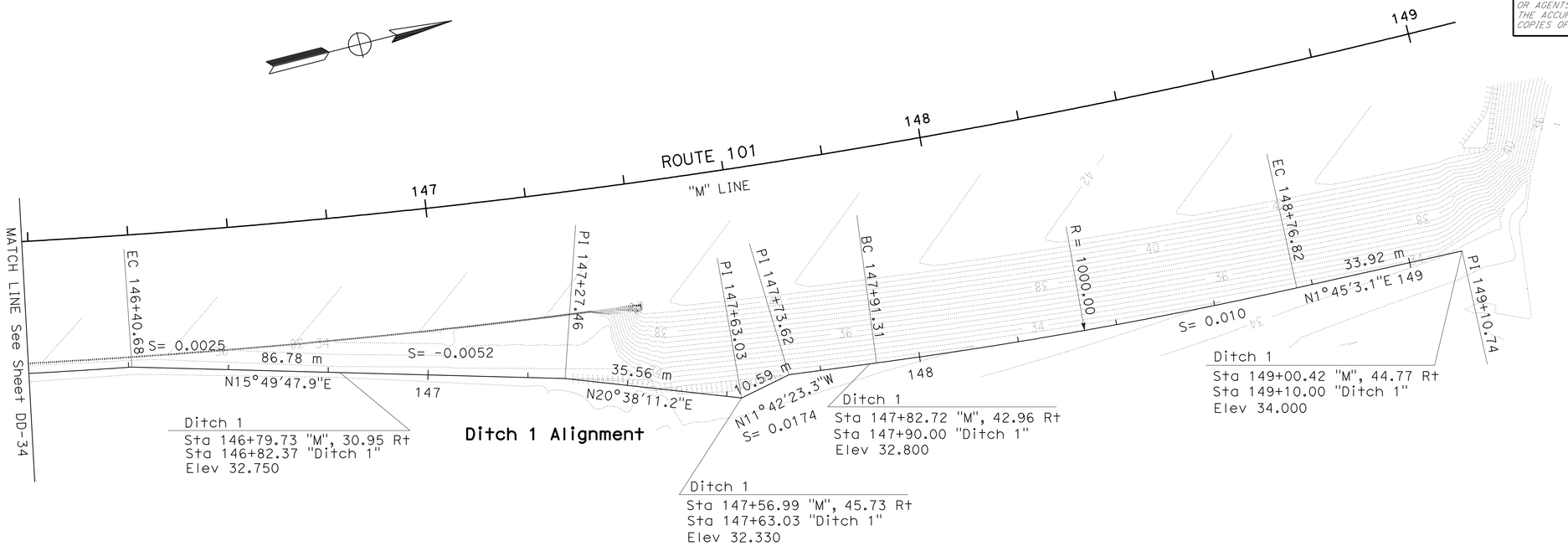

DITCH 1 ALIGNMENT

SCALE 1:500

DITCH 1 TYPICAL CROSS SECTIONS

DITCH 1 DETAILS

NO SCALE

ALL DIMENSIONS ARE IN METERS UNLESS OTHERWISE SHOWN.

DRAINAGE DETAILS DD-19

SCALE AS SHOWN

STATE OF CALIFORNIA - DEPARTMENT OF TRANSPORTATION
Caltrans
06-DESIGN

FUNCTIONAL SUPERVISOR: DAVID FRANKE
CALCULATED-DESIGNED BY: MICHAEL ZAMORA
CHECKED BY: DAN MASSA
REVISED BY: M. ZAMORA
DATE REVISED: 04/12/10

LAST REVISION 05-05-10
DATE PLOTTED => 02-AUG-2010
TIME PLOTTED => 14:32

Dist	COUNTY	ROUTE	KILOMETER POST TOTAL PROJECT	SHEET No.	TOTAL SHEETS
05	Mon	101	R146.8/159.7	574	1402

REGISTERED CIVIL ENGINEER — DATE 5-16-10

PLANS APPROVAL DATE 7-26-10

REGISTERED PROFESSIONAL ENGINEER — DANIEL B. MASSA No. 59095 Exp. 6/30/11 CIVIL — STATE OF CALIFORNIA

THE STATE OF CALIFORNIA OR ITS OFFICERS OR AGENTS SHALL NOT BE RESPONSIBLE FOR THE ACCURACY OR COMPLETENESS OF ELECTRONIC COPIES OF THIS PLAN SHEET.

Caltrans Metric

NOTE:

Cutoff Walls are required at the Begining and End of all Paved Ditches.

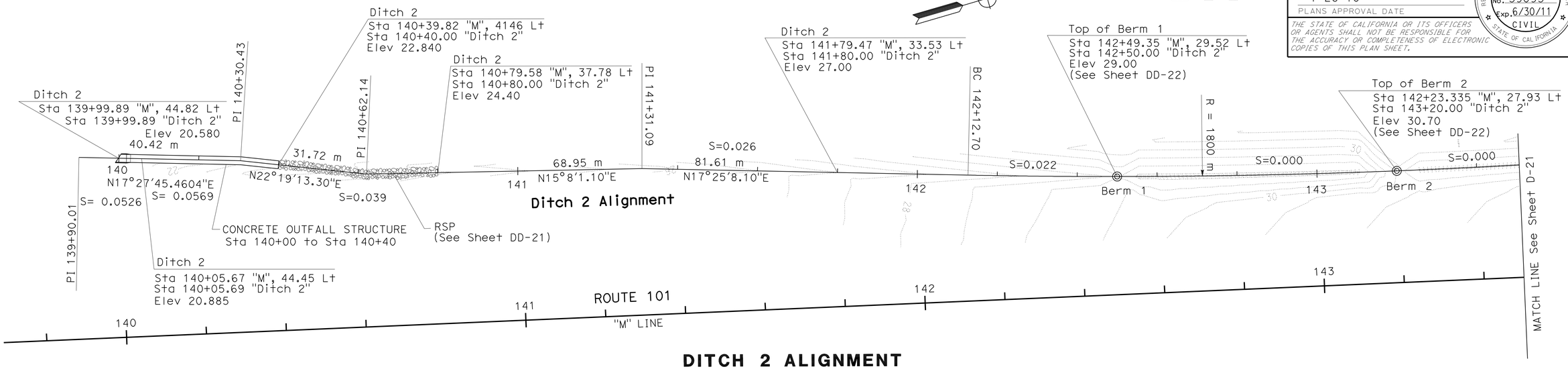

DITCH 2 ALIGNMENT

SCALE 1:500

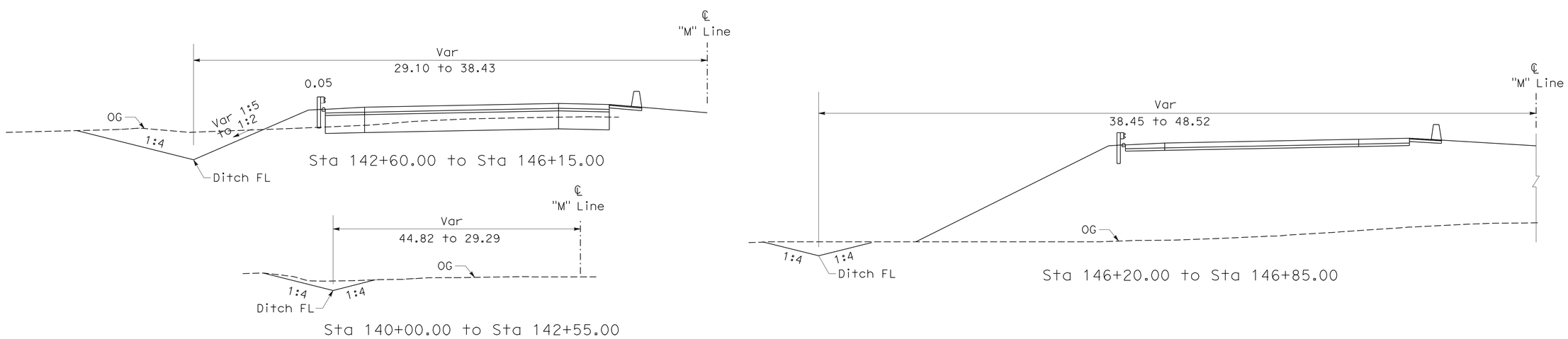

TYPICAL CROSS SECTIONS

ALL DIMENSIONS ARE IN METERS UNLESS OTHERWISE SHOWN.

CONCRETE OUTFALL STRUCTURE (DITCH 2)

NO SCALE

DRAINAGE DETAILS DD-20

SCALE AS SHOWN

STATE OF CALIFORNIA - DEPARTMENT OF TRANSPORTATION — Caltrans — 06-DESIGN

FUNCTIONAL SUPERVISOR: DAVID FRANKE

CALCULATED-DESIGNED BY: MICHAEL ZAMORA — CHECKED BY: DAN MASSA

REVISED BY: M. ZAMORA — DATE REVISED: 04/08/10

LAST REVISION 05-04-10 — DATE PLOTTED => 02-AUG-2010 — TIME PLOTTED => 14:32

Dist	COUNTY	ROUTE	KILOMETER POST TOTAL PROJECT	SHEET No.	TOTAL SHEETS
05	Mon	101	R146.8/159.7	575	1402

REGISTERED CIVIL ENGINEER — DATE 5-16-10

7-26-10
PLANS APPROVAL DATE

REGISTERED PROFESSIONAL ENGINEER — DANIEL B. MASSA — No. 59095 — Exp. 6/30/11 — CIVIL — STATE OF CALIFORNIA

THE STATE OF CALIFORNIA OR ITS OFFICERS OR AGENTS SHALL NOT BE RESPONSIBLE FOR THE ACCURACY OR COMPLETENESS OF ELECTRONIC COPIES OF THIS PLAN SHEET.

Caltrans Metric

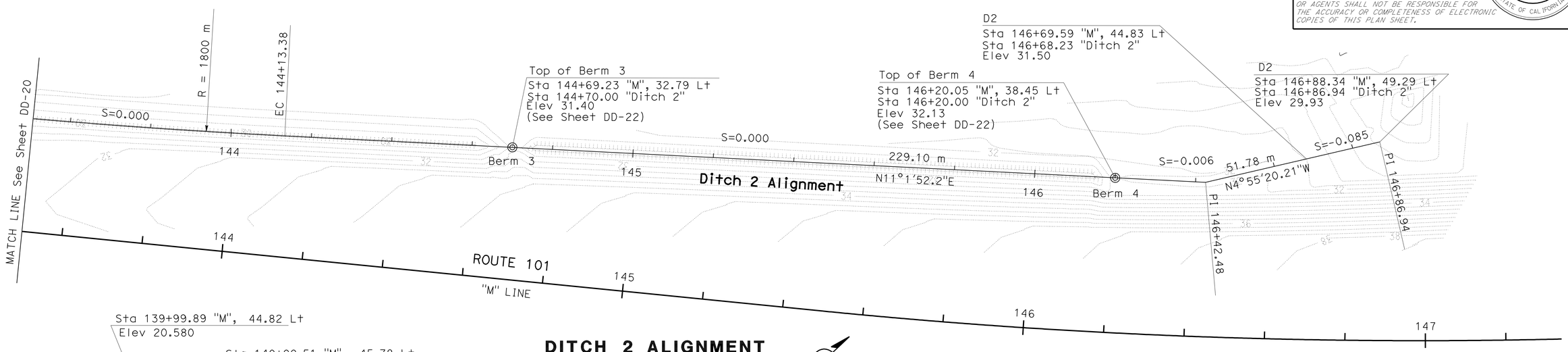

DITCH 2 ALIGNMENT

SCALE 1:500

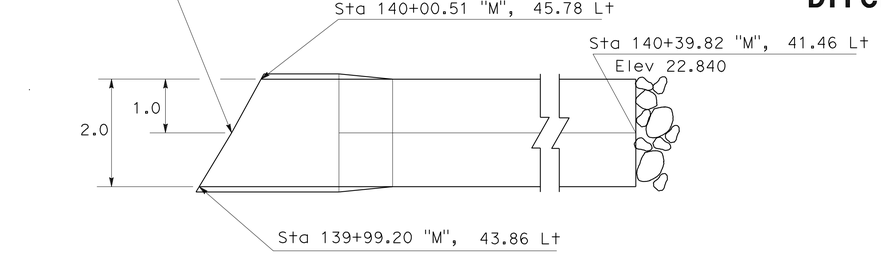

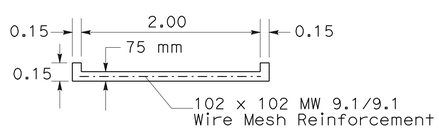

SECTION A-A

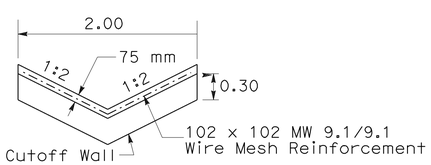

SECTION B-B

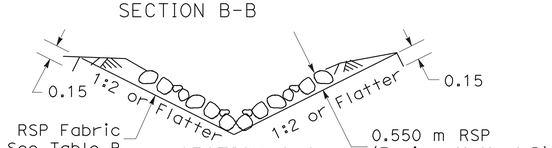

SECTION C-C

DETAIL

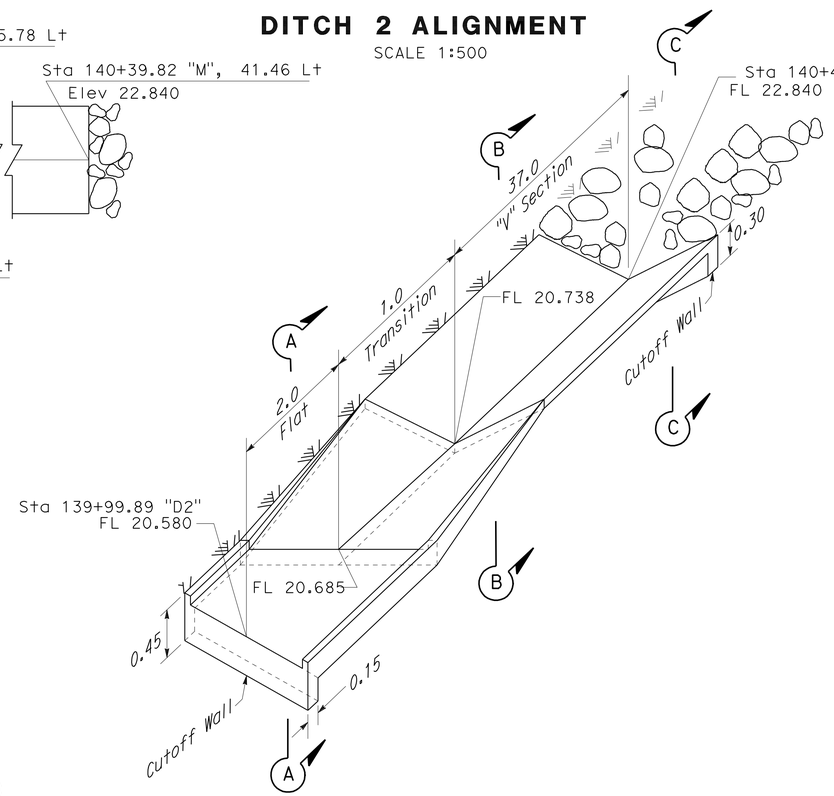

CONCRETE OUTFALL STRUCTURE

NO SCALE

Concrete Outfall Structure	MINOR CONCRETE (Misc CONST) (m^3)	RSP (FACING, METHOD B) (m^3)	RSP FABRIC (CLASS 8) (m^2)
	7.10 *	90.0 *	160.0 *

* Quantity included in Summary of Drainage Quantities on Sheet DQ-63

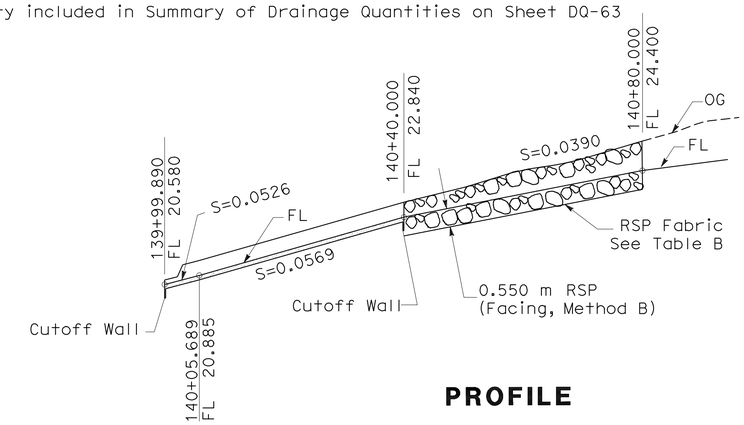

PROFILE

ALL DIMENSIONS ARE IN METERS UNLESS OTHERWISE SHOWN.

DRAINAGE DETAILS DD-21

SCALE AS SHOWN

REVISED BY	M. ZAMORA		
DATE REVISED	04/08/10		
MICHAEL ZAMORA			
DAN MASSA			
CALCULATED-DESIGNED BY			
CHECKED BY			
FUNCTIONAL SUPERVISOR	DAVID FRANKE		

STATE OF CALIFORNIA - DEPARTMENT OF TRANSPORTATION — 06-DESIGN — Caltrans

LAST REVISION 05-16-10 | DATE PLOTTED => 02-AUG-2010 | TIME PLOTTED => 14:32

Dist	COUNTY	ROUTE	KILOMETER POST TOTAL PROJECT	SHEET No.	TOTAL SHEETS
05	Mon	101	R146.8/159.7	576	1402

Caltrans Metric

DAN 5-16-10
REGISTERED CIVIL ENGINEER DATE

7-26-10
PLANS APPROVAL DATE

REGISTERED PROFESSIONAL ENGINEER DANIEL B. MASSA No. 59095 Exp. 6/30/11 CIVIL STATE OF CALIFORNIA

THE STATE OF CALIFORNIA OR ITS OFFICERS OR AGENTS SHALL NOT BE RESPONSIBLE FOR THE ACCURACY OR COMPLETENESS OF ELECTRONIC COPIES OF THIS PLAN SHEET.

DITCH 2 (SOUTHBOUND)

BERM	TOP m	h1 m	h2 m	RSP (FACING, METHOD B) m^3	RSP Fabric (CLASS 8) m^2
(1) STA 142+50	Elev 29.000	0.536	0.650	47.7	86.70
(2) STA 143+20	Elev 30.700	2.350	0.750	93.7	170.30
(3) STA 144+70	Elev 31.400	1.450	0.600	90.5	164.50
(4)STA 146+20	Elev 32.129	1.330	0.330	37.0	67.20
TOTAL				268.90 *	488.70 *

* Quantity included in Summary of Drainage Quantities on Sheet DQ-63

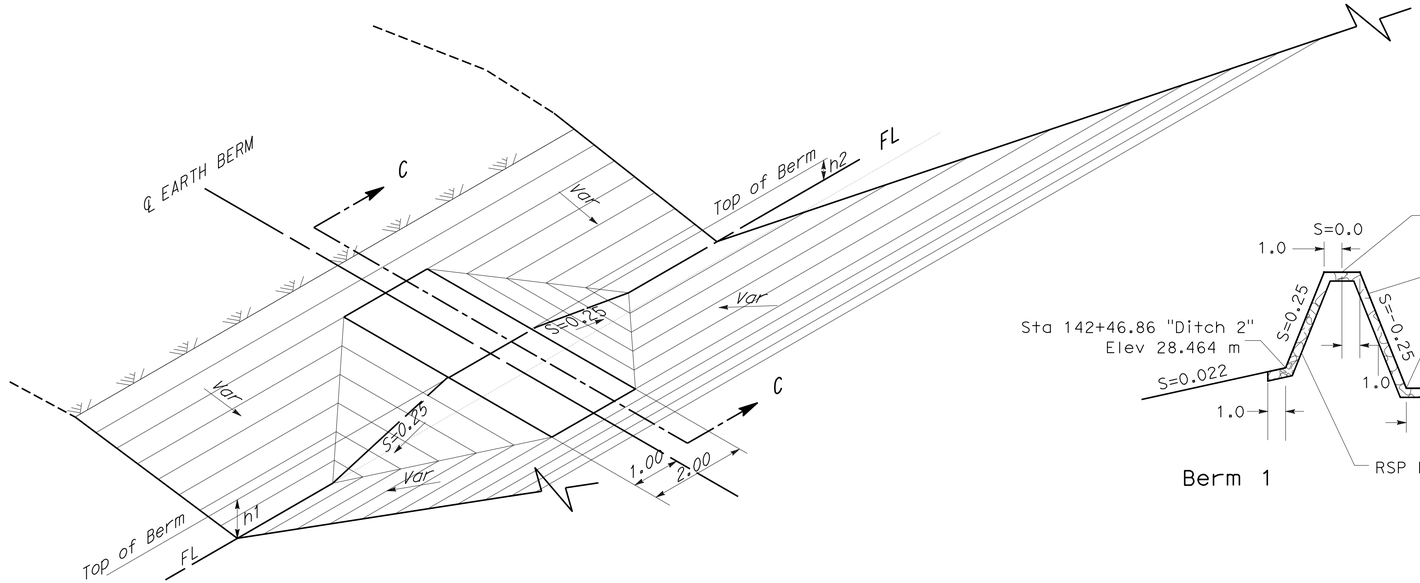

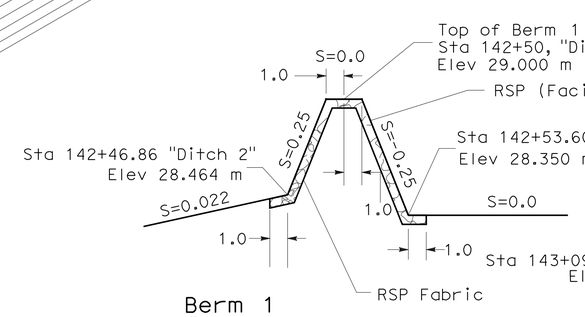

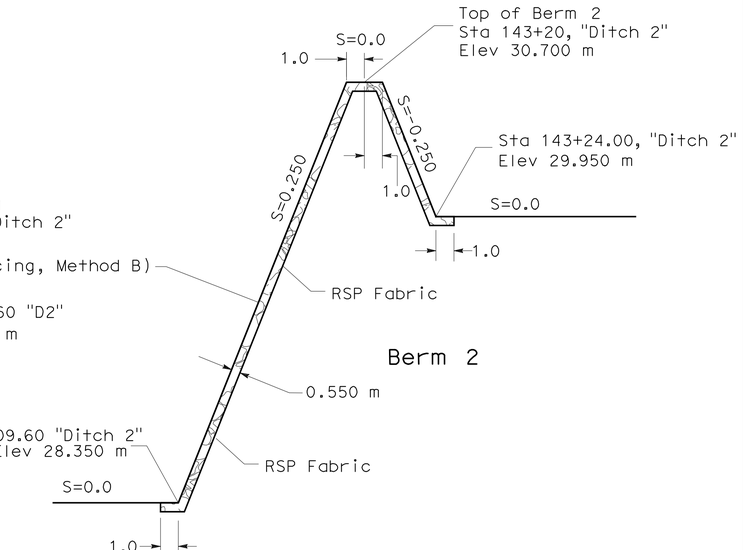

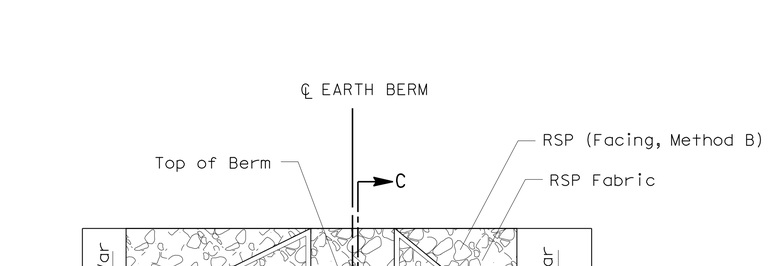

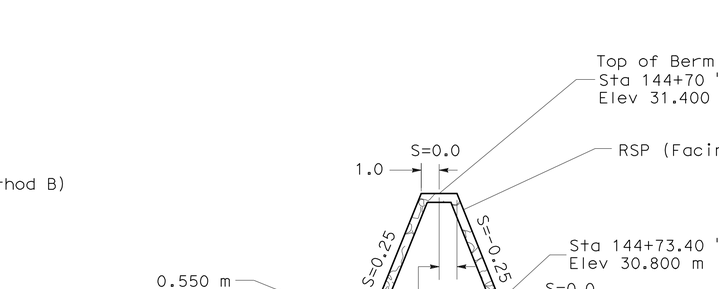

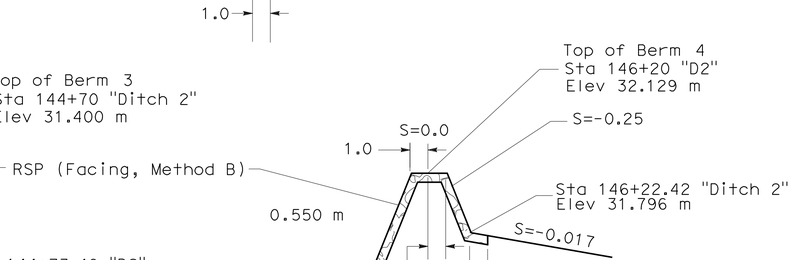

EARTH BERMS
DITCH 2

DRAINAGE DETAILS

NO SCALE

DD-22

STATE OF CALIFORNIA - DEPARTMENT OF TRANSPORTATION
Caltrans
06-DESIGN

FUNCTIONAL SUPERVISOR: DAVID FRANKE
CALCULATED-DESIGNED BY: MICHAEL ZAMORA
CHECKED BY: DAN MASSA
REVISED BY: M. ZAMORA
DATE REVISED: 05/04/10

LAST REVISION 05-16-10
DATE PLOTTED => 02-AUG-2010
TIME PLOTTED => 14:32

Dist	COUNTY	ROUTE	KILOMETER POST TOTAL PROJECT	SHEET No.	TOTAL SHEETS
05	Mon	101	R146.8/159.7	577	1402

Caltrans Metric

REGISTERED CIVIL ENGINEER 5-16-10 DATE

7-26-10
PLANS APPROVAL DATE

REGISTERED PROFESSIONAL ENGINEER DANIEL B. MASSA No. 59095 Exp. 6/30/11 CIVIL STATE OF CALIFORNIA

THE STATE OF CALIFORNIA OR ITS OFFICERS OR AGENTS SHALL NOT BE RESPONSIBLE FOR THE ACCURACY OR COMPLETENESS OF ELECTRONIC COPIES OF THIS PLAN SHEET.

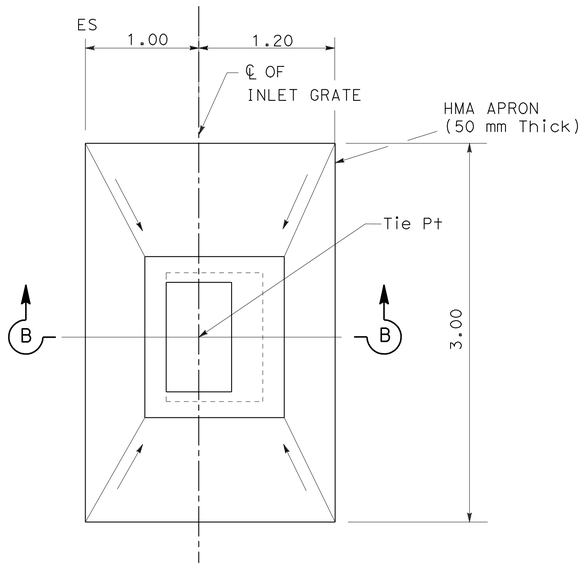

PLAN

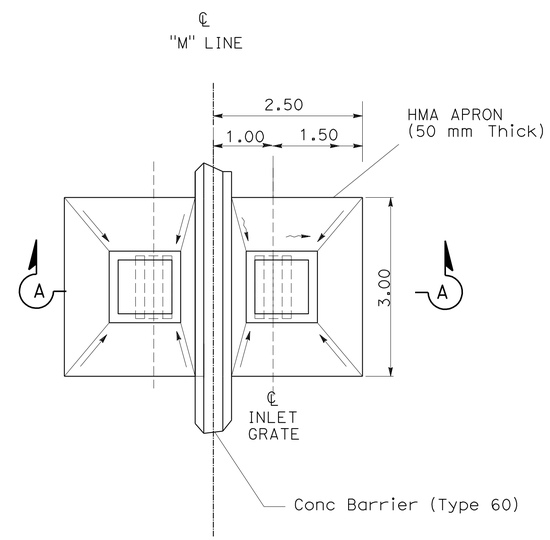

PLAN

(See Std Plans
for additional information)

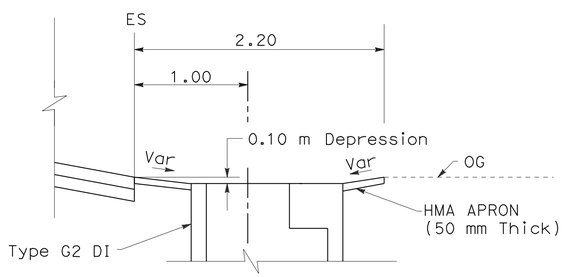

SECTION B-B

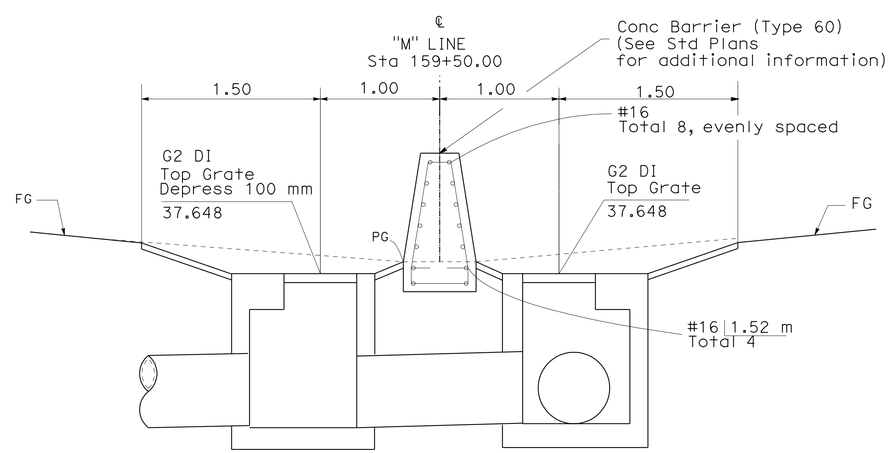

SECTION A-A

INLET ADJACENT TO ES

"RUSS" LINE 36 b , 37 a D

MEDIAN BARRIER BETWEEN INLETS

ALL DIMENSIONS ARE IN METERS
UNLESS OTHERWISE SHOWN.

DRAINAGE DETAILS

NO SCALE

DD-23

STATE OF CALIFORNIA - DEPARTMENT OF TRANSPORTATION
Caltrans
06-DESIGN
FUNCTIONAL SUPERVISOR DAVID FRANKE
CALCULATED-DESIGNED BY MICHEAL ZAMORA
CHECKED BY DAN MASSA
REVISED BY M. ZAMORA
DATE REVISED

LAST REVISION 01-20-10
DATE PLOTTED => 02-AUG-2010
TIME PLOTTED => 14:32

Dist	COUNTY	ROUTE	KILOMETER POST TOTAL PROJECT	SHEET No.	TOTAL SHEETS
05	Mon	101	R146.8/159.7	578	1402

REGISTERED CIVIL ENGINEER 5-16-10 DATE

7-26-10
PLANS APPROVAL DATE

REGISTERED PROFESSIONAL ENGINEER DANIEL B. MASSA No. 59095 Exp. 6/30/11 CIVIL STATE OF CALIFORNIA

THE STATE OF CALIFORNIA OR ITS OFFICERS OR AGENTS SHALL NOT BE RESPONSIBLE FOR THE ACCURACY OR COMPLETENESS OF ELECTRONIC COPIES OF THIS PLAN SHEET.

Caltrans Metric

Note:
L1 is on Upstream Side of Inlet
L2 is on Downstream Side of Inlet

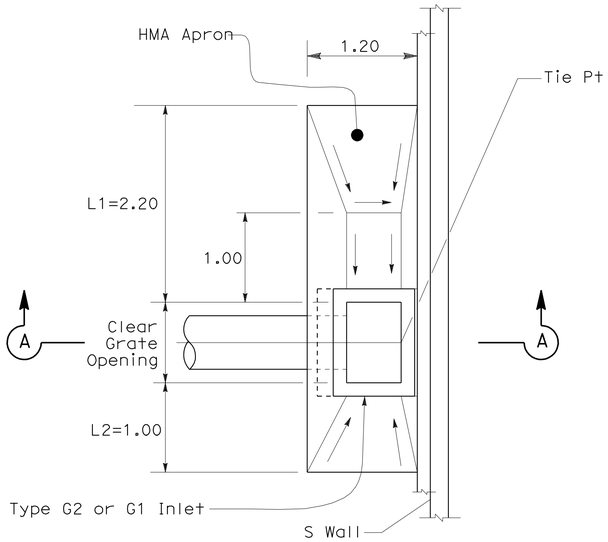

PLAN

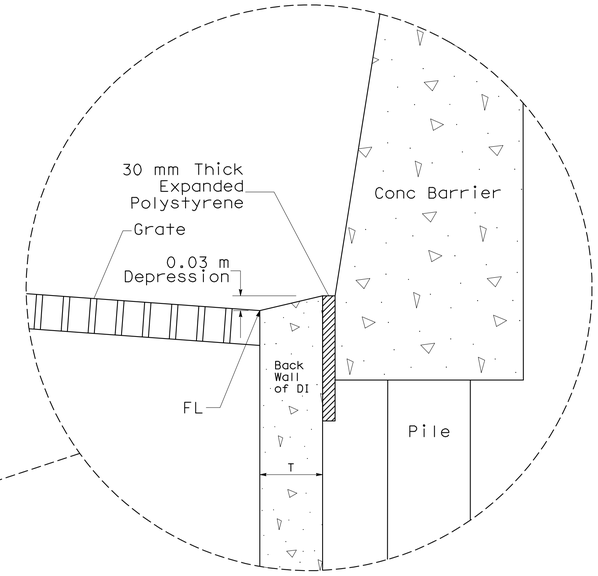

SPOT DETAIL

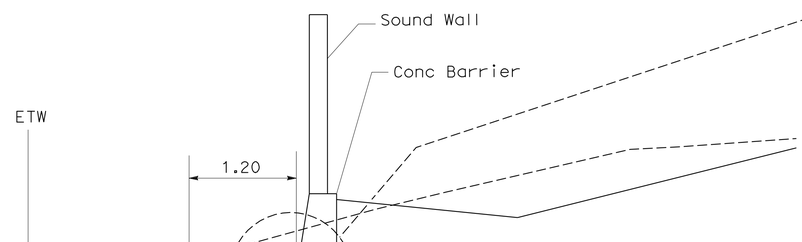

SECTION A-A

TYPE G2 OR G1 INLET ADJACENT TO SOUND WALL

"M" LINE 1 (b), 3 (d), 95 (f), 96 (e), 100 (e)

101 (e), 102 (d)

ALL DIMENSIONS ARE IN METERS UNLESS OTHERWISE SHOWN.

DRAINAGE DETAILS

NO SCALE

DD-24

STATE OF CALIFORNIA - DEPARTMENT OF TRANSPORTATION
Caltrans
06-DESIGN

FUNCTIONAL SUPERVISOR
DAVID FRANKE

CALCULATED-DESIGNED BY MICHEAL ZAMORA
CHECKED BY DAN MASSA

REVISED BY M. ZAMORA
DATE REVISED 01/20/10

LAST REVISION 01-20-10
DATE PLOTTED => 02-AUG-2010
TIME PLOTTED => 14:32

Dist	COUNTY	ROUTE	KILOMETER POST TOTAL PROJECT	SHEET No.	TOTAL SHEETS
05	Mon	101	R146.8/159.7	579	1402

REGISTERED CIVIL ENGINEER 5-16-10 DATE

7-26-10
PLANS APPROVAL DATE

REGISTERED PROFESSIONAL ENGINEER DANIEL B. MASSA No. 59095 Exp. 6/30/11 CIVIL STATE OF CALIFORNIA

THE STATE OF CALIFORNIA OR ITS OFFICERS OR AGENTS SHALL NOT BE RESPONSIBLE FOR THE ACCURACY OR COMPLETENESS OF ELECTRONIC COPIES OF THIS PLAN SHEET.

Caltrans Metric

DESIGN DATA

REINFORCED CONCRETE:
Minor Concrete
Fy = 400 Mpa

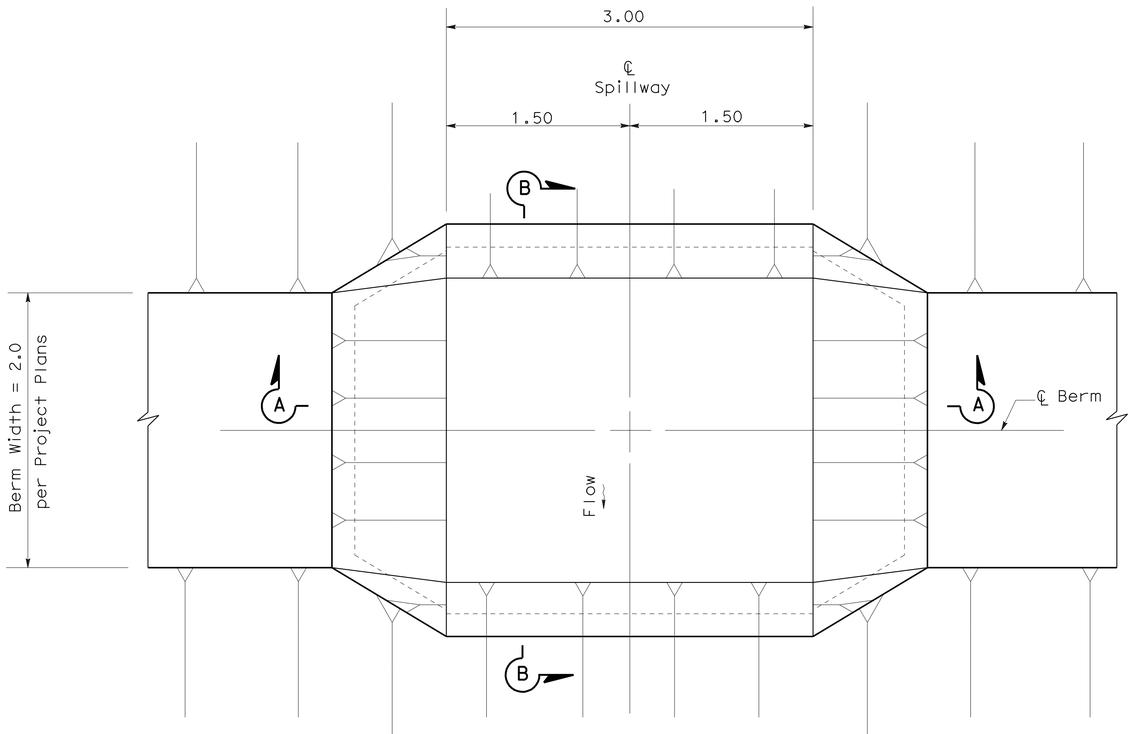

PLAN

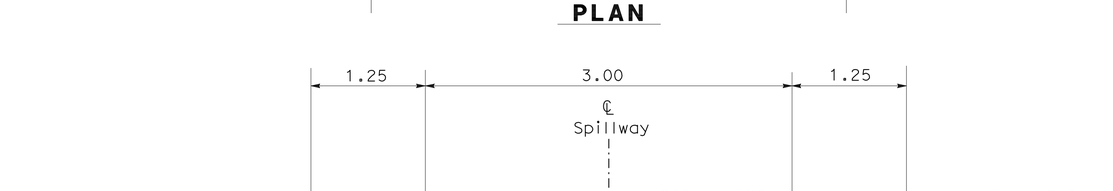

SECTION A-A

Drainage Sheet	Location	Spillway Elev (m)	Minor Concrete (Misc Const) (m^3)	RSP Facing Method B (m^3)	RSP Fabric (m^2)
D-3	Between Basin C1 and C2	33.00	4.00	7.0	12.60
D-3	Between Basin C2 and C3	32.50	4.00	7.0	12.60
D-3	Between Basin C3 and Ditch	32.00	4.00	7.0	12.60
TOTAL			12.00 *	21.0 *	37.80 *

* Quantity included in Summary of Drainage Quantities on Sheet DQ-63

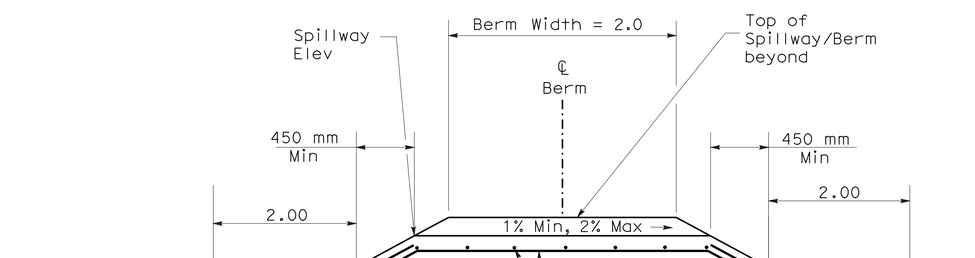

SECTION B-B

OVERFLOW SPILLWAY

ALL DIMENSIONS ARE IN METERS
UNLESS OTHERWISE SHOWN.

DRAINAGE DETAILS

NO SCALE **DD-25**

STATE OF CALIFORNIA - DEPARTMENT OF TRANSPORTATION
Caltrans
06-DESIGN
FUNCTIONAL SUPERVISOR DAVID FRANKE
CALCULATED-DESIGNED BY MICHEAL ZAMORA
CHECKED BY DAN MASSA
REVISED BY D. MASSA
DATE REVISED 04/01/09

LAST REVISION 05-16-10
DATE PLOTTED => 10-AUG-2010
TIME PLOTTED => 13:28

Dist	COUNTY	ROUTE	KILOMETER POST TOTAL PROJECT	SHEET No.	TOTAL SHEETS
05	Mon	101	R146.8/159.7	580	1402

REGISTERED CIVIL ENGINEER 5-16-10 DATE

7-26-10
PLANS APPROVAL DATE

REGISTERED PROFESSIONAL ENGINEER DANIEL B. MASSA No. 59095 Exp. 6/30/11 CIVIL STATE OF CALIFORNIA

THE STATE OF CALIFORNIA OR ITS OFFICERS OR AGENTS SHALL NOT BE RESPONSIBLE FOR THE ACCURACY OR COMPLETENESS OF ELECTRONIC COPIES OF THIS PLAN SHEET.

Caltrans Metric

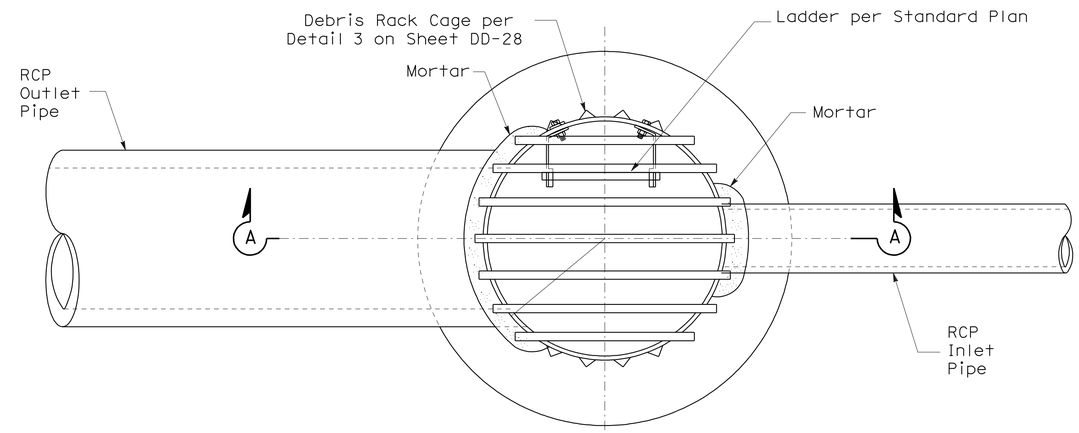

CSP RISER PLAN

NOT TO SCALE

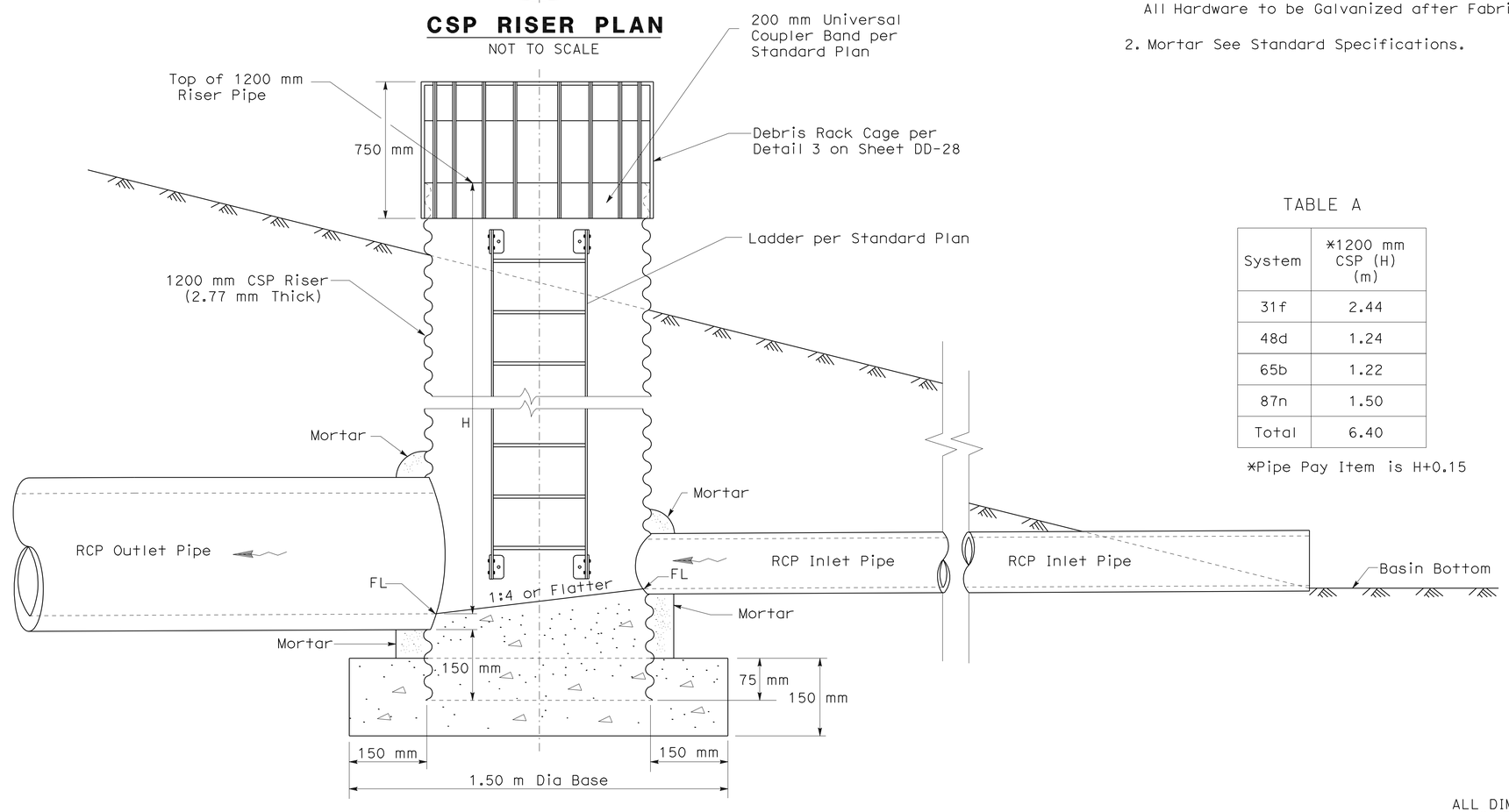

TYPICAL SECTION A-A

NOT TO SCALE

NOTES:

1. Galvanizing See Standard Specifications or Special Provisions . All Hardware to be Galvanized after Fabrication.
2. Mortar See Standard Specifications.

TABLE A

System	*1200 mm CSP (H) (m)
31f	2.44
48d	1.24
65b	1.22
87n	1.50
Total	6.40

*Pipe Pay Item is H+0.15

ALL DIMENSIONS ARE IN METERS UNLESS OTHERWISE SHOWN.

DRAINAGE DETAILS

NO SCALE

DD-26

1200 MM CSP RISER

STATE OF CALIFORNIA - DEPARTMENT OF TRANSPORTATION
Caltrans
06-DESIGN

FUNCTIONAL SUPERVISOR: DAVID FRANKE
CALCULATED-DESIGNED BY: CARLOS BLANCAS
CHECKED BY: DAN MASSA
REVISED BY: D. MASSA
DATE REVISED: 05/05/09

LAST REVISION 05-16-10 | DATE PLOTTED => 02-AUG-2010 | TIME PLOTTED => 14:33

Dist	COUNTY	ROUTE	KILOMETER POST TOTAL PROJECT	SHEET No.	TOTAL SHEETS
05	Mon	101	R146.8/159.7	581	1402

REGISTERED CIVIL ENGINEER 5-16-10 DATE

7-26-10
PLANS APPROVAL DATE

REGISTERED PROFESSIONAL ENGINEER DANIEL B. MASSA No. 59095 Exp. 6/30/11 CIVIL STATE OF CALIFORNIA

THE STATE OF CALIFORNIA OR ITS OFFICERS OR AGENTS SHALL NOT BE RESPONSIBLE FOR THE ACCURACY OR COMPLETENESS OF ELECTRONIC COPIES OF THIS PLAN SHEET.

Caltrans Metric

ORIFICE TABLE

Basin	Diameter (mm)	Total
C1	35	4
C2	30	4
C3	23	4

RISER QUANTITIES

System	*1200 mm CSP (H) (m)
14a	1.75
17a	1.75
20a	1.75
Total	5.25

*Pipe Inlet Pay Limit is H+0.15

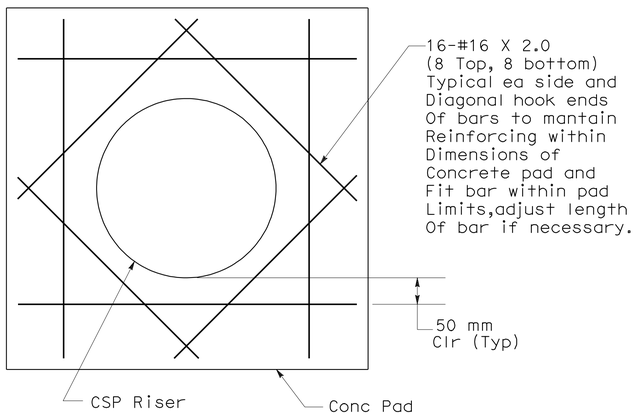

DETAIL 1
TYPICAL OPENING REINFORCING
NOT TO SCALE

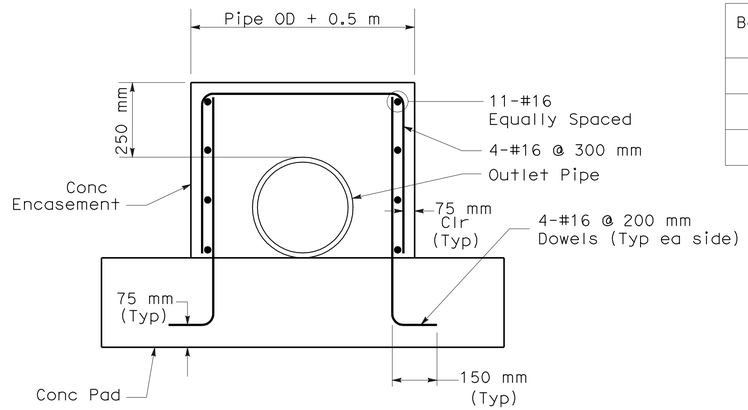

DETAIL 2
CONCRETE ANCHOR
NOT TO SCALE

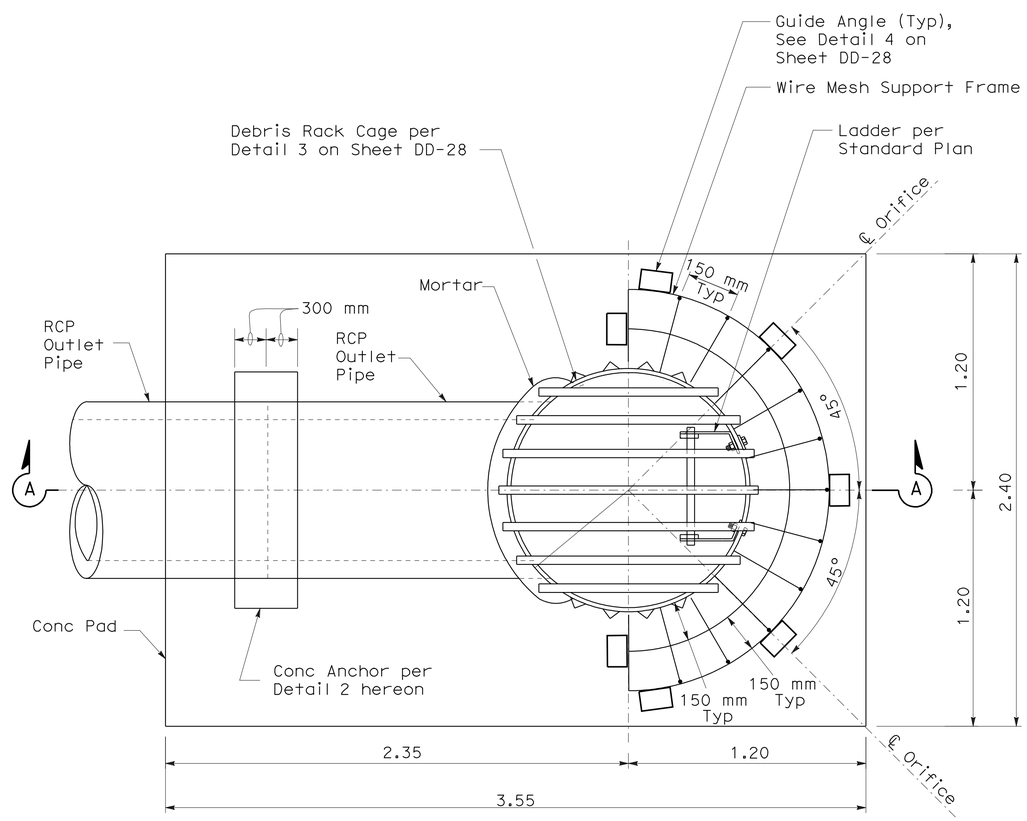

CSP RISER PLAN
NOT TO SCALE

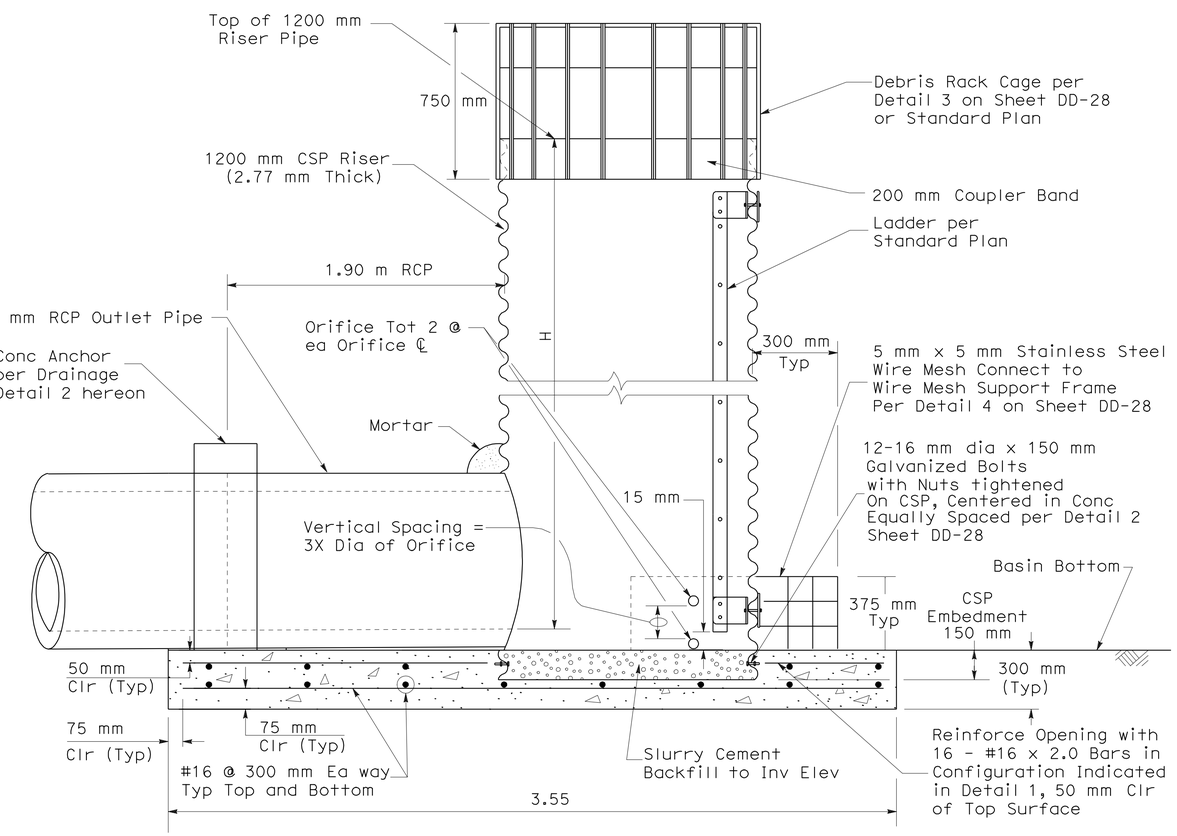

TYPICAL SECTION A-A
NOT TO SCALE

ALL DIMENSIONS ARE IN METERS
UNLESS OTHERWISE SHOWN.

DRAINAGE DETAILS

CSP RISER with ORIFICES

NO SCALE **DD-27**

STATE OF CALIFORNIA - DEPARTMENT OF TRANSPORTATION	06-DESIGN	
FUNCTIONAL SUPERVISOR	DAVID FRANKE	
CALCULATED-DESIGNED BY	CARLOS BLANCAS	REVISED BY D. MASSA
CHECKED BY	DAN MASSA	DATE REVISED 05/06/09

LAST REVISION 05-16-10 | DATE PLOTTED => 02-AUG-2010 | TIME PLOTTED => 14:33

Dist	COUNTY	ROUTE	KILOMETER POST TOTAL PROJECT	SHEET No.	TOTAL SHEETS
05	Mon	101	R146.8/159.7	582	1402

Caltrans Metric

DAN 5-16-10
REGISTERED CIVIL ENGINEER DATE

7-26-10
PLANS APPROVAL DATE

REGISTERED PROFESSIONAL ENGINEER DANIEL B. MASSA No. 59095 Exp. 6/30/11 CIVIL STATE OF CALIFORNIA

THE STATE OF CALIFORNIA OR ITS OFFICERS OR AGENTS SHALL NOT BE RESPONSIBLE FOR THE ACCURACY OR COMPLETENESS OF ELECTRONIC COPIES OF THIS PLAN SHEET.

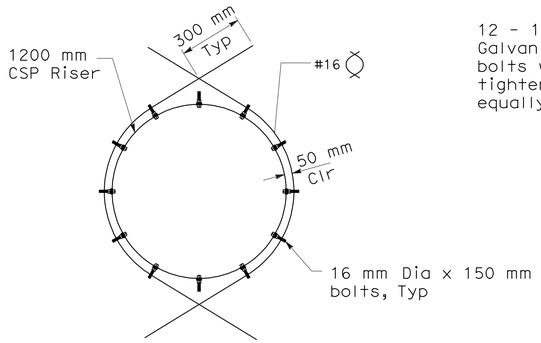

DETAIL 1

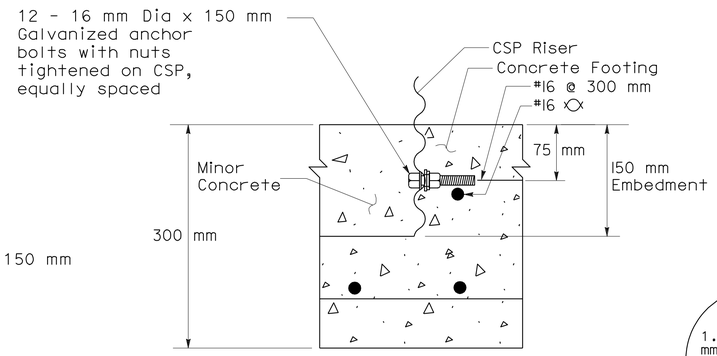

DETAIL 2
GALVANIZED ANCHOR BOLT

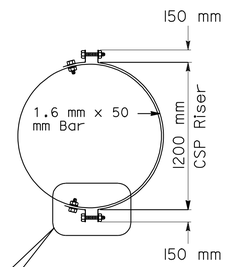

DETAIL 5
BAND CLAMP

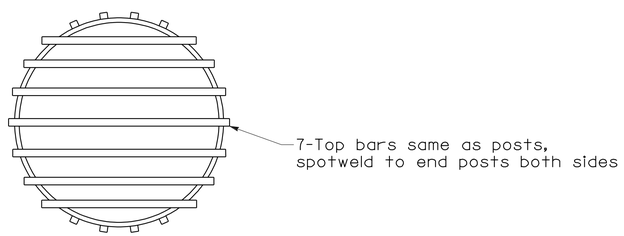

PLAN

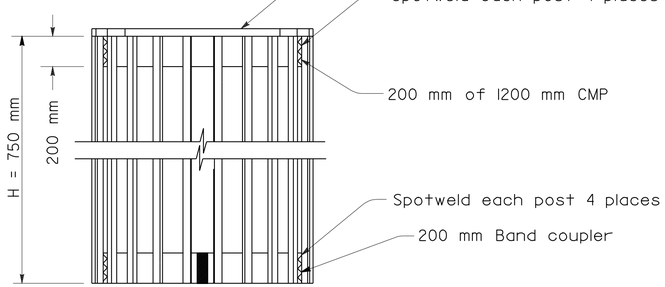

H = 22 Posts- 1.8 m or 2.4 m lengths use 50 mm pipe or
L 51mm x 51mm x 4.8 mm (Galvanized steel or aluminum)

ELEVATION

DETAIL 3
DEBRIS RACK CAGE

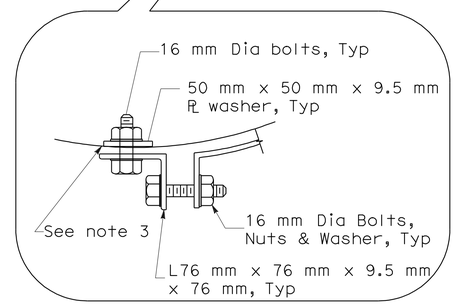

NOTES:

1. All Hardware and Fabrication Materials shall be Galvanized Except as Noted.
2. 5 mm x 5 mm (4 Mesh per 25mm) 0.81 mm Wire Dia, Type 304 Stainless Steel.
3. Seal Bolt Holes and Coat Connection Steel with Asphalt Mastic (ASTM A491). Trowel Asphalt Mastic a Minimum of 13mm Thick on and around Connection Steel. Use Mastic to Fill Corrugations behind Washer Plates.

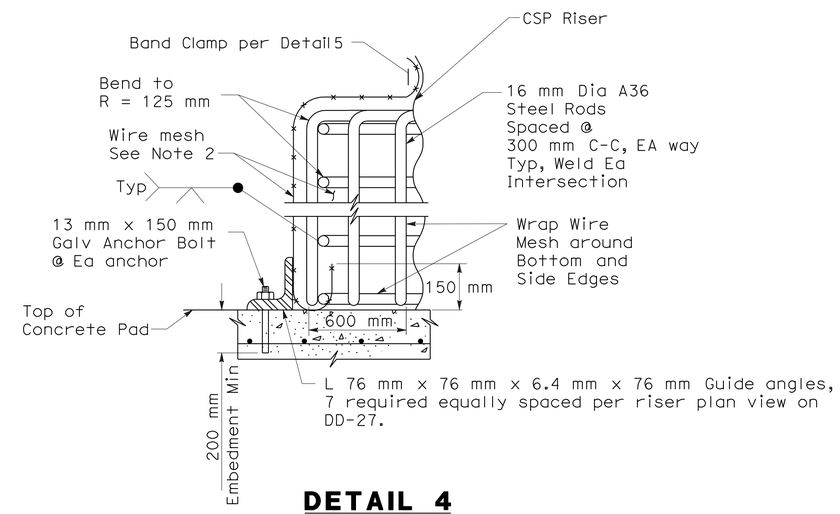

DETAIL 4
WIRE MESH SUPPORT FRAME

CSP RISER WITH ORIFICES
MISCELLANEOUS DETAILS NO.1

ALL DIMENSIONS ARE IN METERS
UNLESS OTHERWISE SHOWN.

DRAINAGE DETAILS

NO SCALE **DD-28**

CARLOS BLANCAS	REVISED BY	D. MASSA	
DAN MASSA	DATE REVISED	04/01/09	
CALCULATED-DESIGNED BY			
CHECKED BY			
FUNCTIONAL SUPERVISOR	DAVID FRANKE		

STATE OF CALIFORNIA - DEPARTMENT OF TRANSPORTATION
Caltrans 06-DESIGN

LAST REVISION 09-03-09 DATE PLOTTED => 02-AUG-2010 TIME PLOTTED => 14:33

Dist	COUNTY	ROUTE	KILOMETER POST TOTAL PROJECT	SHEET No.	TOTAL SHEETS
05	Mon	101	R146.8/159.7	583	1402

Caltrans Metric

DAN 5-16-10
REGISTERED CIVIL ENGINEER DATE

7-26-10
PLANS APPROVAL DATE

REGISTERED PROFESSIONAL ENGINEER DANIEL B. MASSA No. 59095 Exp. 6/30/11 CIVIL STATE OF CALIFORNIA

THE STATE OF CALIFORNIA OR ITS OFFICERS OR AGENTS SHALL NOT BE RESPONSIBLE FOR THE ACCURACY OR COMPLETENESS OF ELECTRONIC COPIES OF THIS PLAN SHEET.

NOTES:

1. "H" is the difference in elevation between the outlet pipe flow line and the normal gutter grade line undepressed.
2. Wall reinforcing not required when "H" is 2.5 m or less and the unsupported width or length is 2.1 m or less. Walls exceeding these limits shall be reinforced with #13 bars @ 450 mm ± centers placed 40 mm clear to inside of box unless otherwise shown.
3. Inlet bottom reinforcing not required. See Standard Plan D74C for alternative reinforced bottom and alternative half round bottom.
4. Steps-None required where "H" is less than 0.75 m. Where "H" is 0.75 m or more, install steps with lowest rung 300 mm above the floor and highest rung not more than 150 mm below top of inlet. The distance between steps shall not exceed 300 mm and shall be uniform throughout the length of the wall. Place steps in the wall without an opening. Steps inserts may be substituted for the bar steps. Step inserts shall comply with State Industrial Safety requirements. See Standard Plan D74C for step details.
5. Basin floors shall have wood trowel finish and a minimum slope of 1:4 from all directions toward outlet pipe.
6. Galvanizing-See Standard Specifications or Special Provisions.
7. Cast-in-place or Precast alternative is optional with contractor, See Standard Specifications.
8. Bar may be rotated as necessary to clear opening. Where "L" is 150 mm or less, bar may be omitted.
9. Cast-in-place inlets to be formed around all pipes/stubs intersecting the inlet, and concrete poured in one continuous operation. Precast inlets shall have mortared connections conforming to details for Type GCP Inlet shown on Standard Plan D75B. See Standard Specifications for mortar composition.

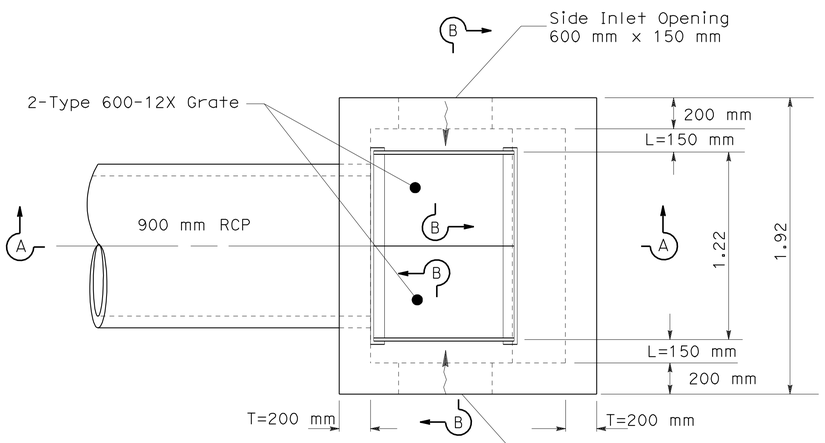

PLAN

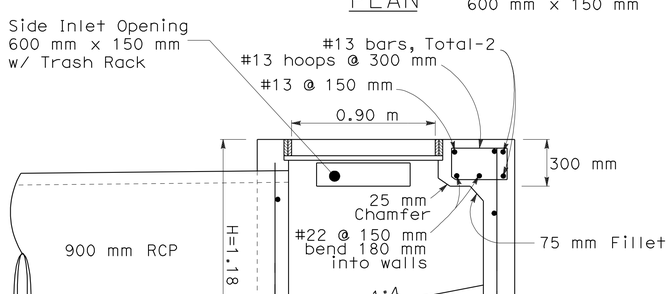

SECTION A-A

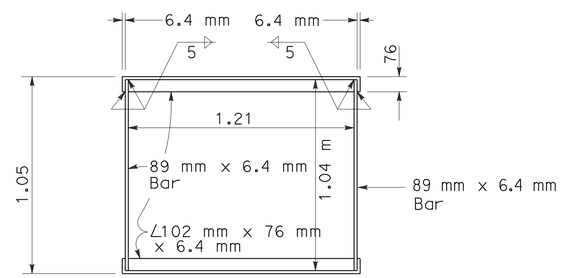

GRATE FRAME DETAILS

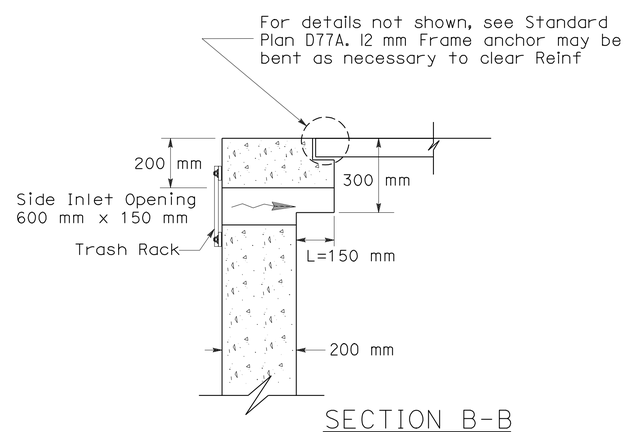

SECTION B-B

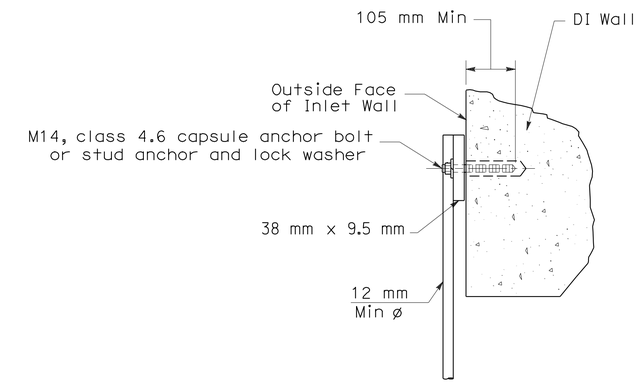

TRASH RACK ANCHOR DETAILS

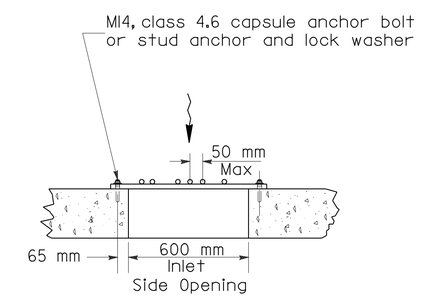

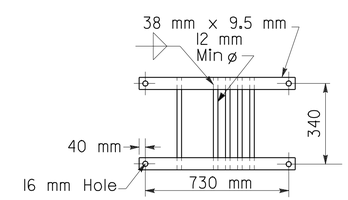

TRASH RACK DETAILS

ALL DIMENSIONS ARE IN METERS
UNLESS OTHERWISE SHOWN.

DRAINAGE DETAILS

DRAINAGE INLET (Type G2 Mod)

NO SCALE

DD-29

STATE OF CALIFORNIA - DEPARTMENT OF TRANSPORTATION
Caltrans
06-DESIGN
FUNCTIONAL SUPERVISOR DAVID FRANKE
CALCULATED-DESIGNED BY MICHEAL ZAMORA
CHECKED BY DAN MASSA
REVISED BY M. ZAMORA
DATE REVISED 09/22/09

LAST REVISION 05-16-10 | DATE PLOTTED => 02-AUG-2010 | TIME PLOTTED => 14:33

Dist	COUNTY	ROUTE	KILOMETER POST TOTAL PROJECT	SHEET No.	TOTAL SHEETS
05	Mon	101	R146.8/159.7	584	1402

Caltrans Metric

REGISTERED CIVIL ENGINEER — DATE 5-16-10

7-26-10
PLANS APPROVAL DATE

REGISTERED PROFESSIONAL ENGINEER DANIEL B. MASSA No. 59095 Exp. 6/30/11 CIVIL STATE OF CALIFORNIA

THE STATE OF CALIFORNIA OR ITS OFFICERS OR AGENTS SHALL NOT BE RESPONSIBLE FOR THE ACCURACY OR COMPLETENESS OF ELECTRONIC COPIES OF THIS PLAN SHEET.

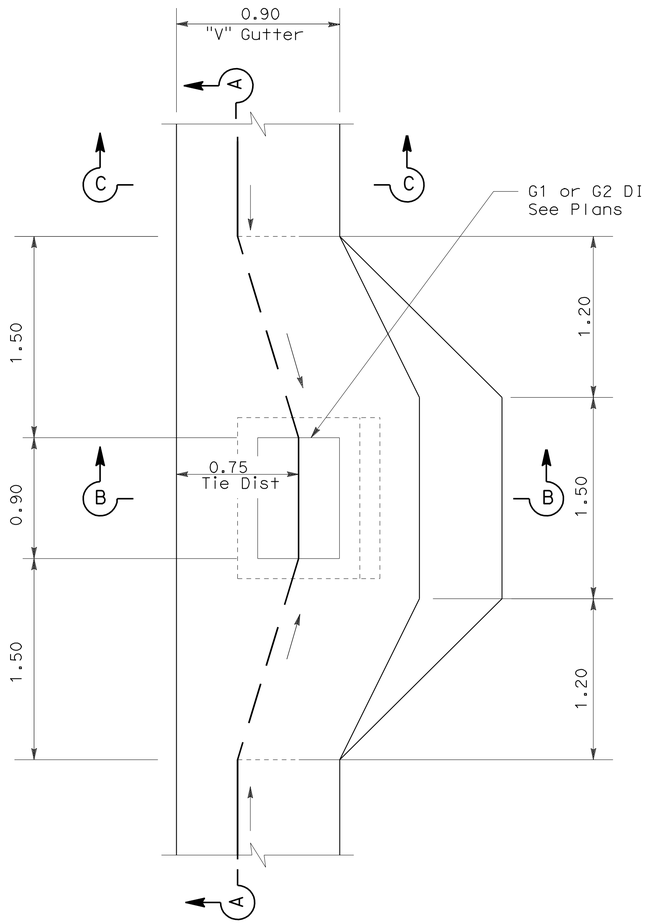

PLAN

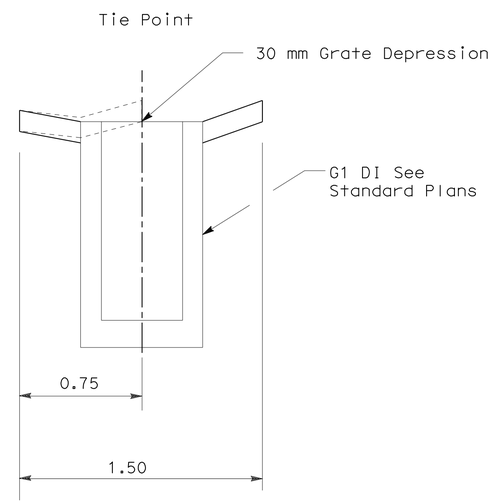

SECTION B-B

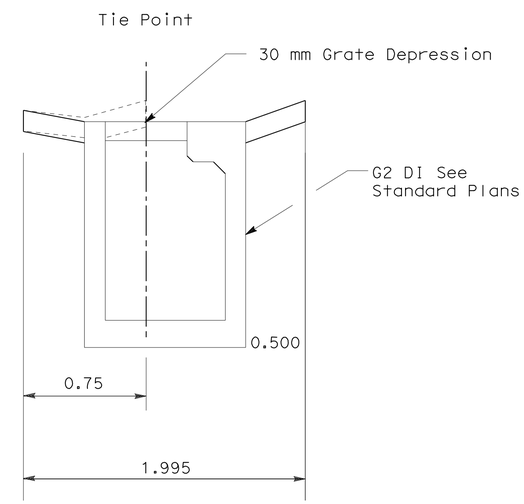

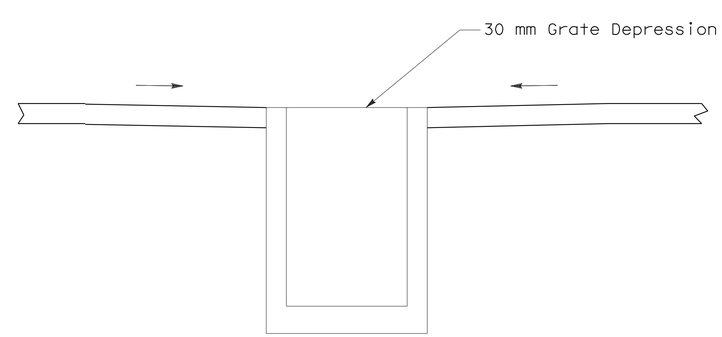

SECTION A-A

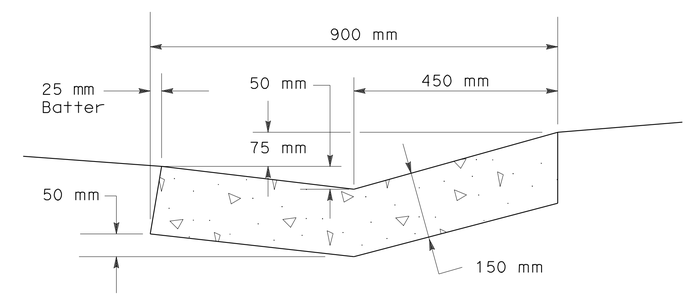

SECTION C-C

ALL DIMENSIONS ARE IN METERS
UNLESS OTHERWISE SHOWN.

PCC "V" GUTTER INLET DETAIL

DRAINAGE DETAILS

NO SCALE

DD-30

STATE OF CALIFORNIA - DEPARTMENT OF TRANSPORTATION
Caltrans
06-DESIGN

FUNCTIONAL SUPERVISOR: DAVID FRANKE
CALCULATED-DESIGNED BY: MICHAEL ZAMORA
CHECKED BY: DAN MASSA
REVISED BY / DATE REVISED

LAST REVISION 09-29-09 | DATE PLOTTED => 10-AUG-2010 | TIME PLOTTED => 13:28

Dist	COUNTY	ROUTE	KILOMETER POST TOTAL PROJECT	SHEET No.	TOTAL SHEETS
05	Mon	101	R146.8/159.7	585	1402

REGISTERED CIVIL ENGINEER 5-16-10 DATE

7-26-10
PLANS APPROVAL DATE

REGISTERED PROFESSIONAL ENGINEER DANIEL B. MASSA No. 59095 Exp. 6/30/11 CIVIL STATE OF CALIFORNIA

THE STATE OF CALIFORNIA OR ITS OFFICERS OR AGENTS SHALL NOT BE RESPONSIBLE FOR THE ACCURACY OR COMPLETENESS OF ELECTRONIC COPIES OF THIS PLAN SHEET.

Caltrans Metric

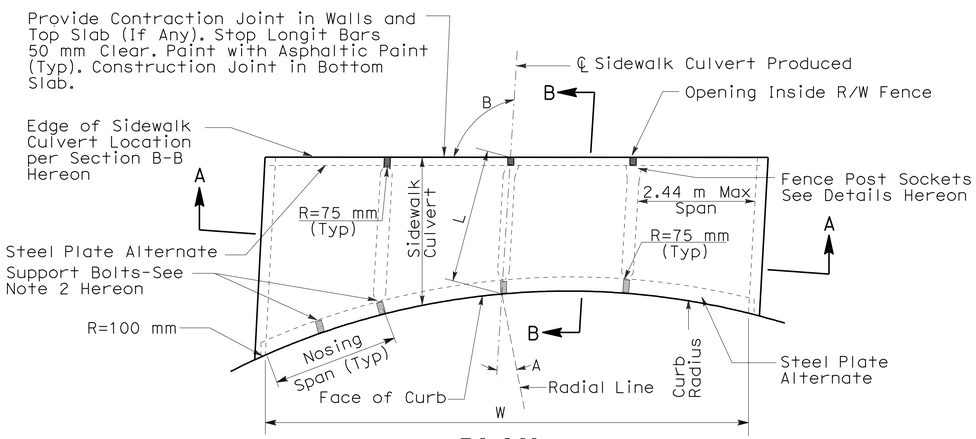

PLAN

NOTES

1. Construct Culvert Opening with Max 2.13 m Chords.
2. Support Bolts
   A. Support Bolts Shall be Installed at The Nose of Each Divider Wall.
   B. When Nosing Span Exceeds 2.13 m Intermediate Support Bolt(s) Shall Be Installed, Equally Spaced At 2.13 m OC Max Spacing.
   C. Spacing Notes Hereon Supersede Those Shown on Standard Plan.
   D. Support Bolts Are Not Required at the Divider Wall Nose
3. Unless Otherwise Specified on Other Sheets, A=0° @ B=90°.
4. All Details Are Applicable for Curb Openings on a Straight Line.
5. Culverts Shall be Constructed As One Span Unless Additional Cells Are Specified on Drainage Plans.

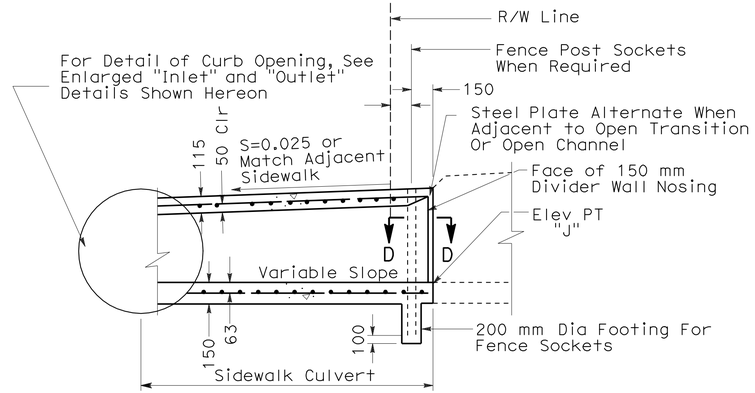

SECTION B-B

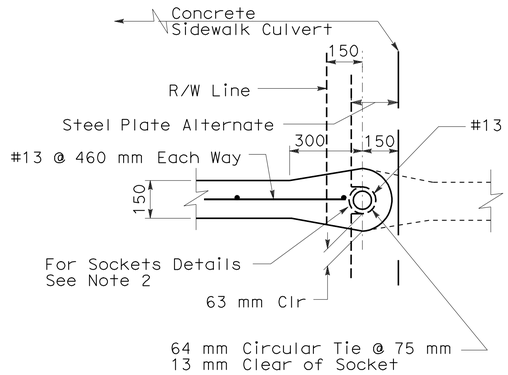

SECTION D-D

POST SOCKET DETAIL

NOTES

1. Where Divider Wall Continues in an Adjoining Structure, the 300 mm Taper Shown Shall Be Repeated as per Dashed Lines.
2. Fence Post Sockets Unless Otherwise Specified Shall be Formed of Lightweight Metal inserts 457 mm Long. These Inserts Shall be Sheet Metal Tubes with an ID 19mm Greater Than the OD of the Fence Post Used. Posts Are To Be Mortared Into the Inserts Using One Part Cement and Two Parts Sand.

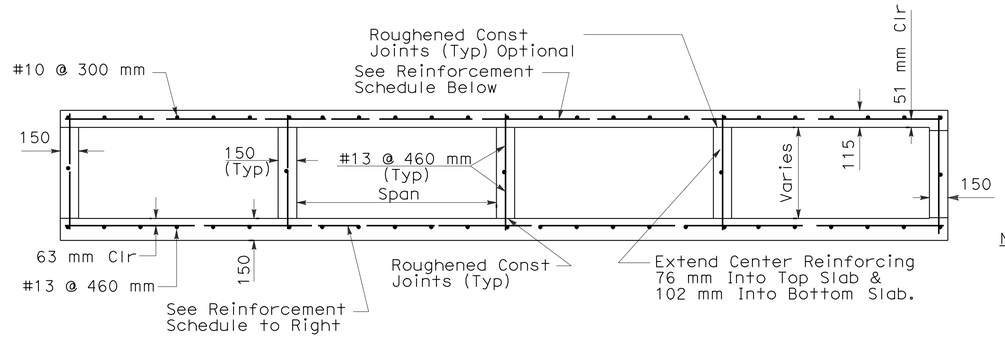

SECTION A-A

TABLE B

SIDEWALK CULVERT REINFORCEMENT	
SPAN (m)	BARS
1.50	#10 @ 200 mm

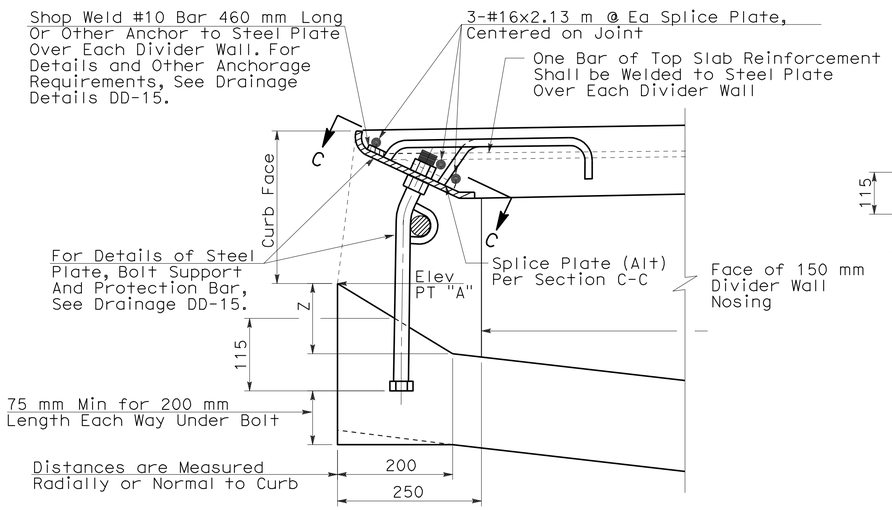

INLET DETAIL

NOTES

1. See Note on Outlet Detail.
2. The Bottom Slab of the Sidewalk Culvert Shall Be Constructed on a Unifrom Grade Unless Otherwise Specified on the Plan Sheet.
3. Z=115 mm Unless Otherwise Specified on the Plan Sheets.
4. Shop Weld One Extra #10 Bar 460 mm Long or Other Anchor (Alt) Each Side of Splice Plate and Within
5. 150 mm Thereof.
   A. Shop Weld Splice Plate to Longer Span Segment.
   B. Alternate Splice Plate May Be Bolted to Each Side.
6. Splice Plate Alternate Shall Be Used Only Where The Splice Is Located Over Support Bolts.

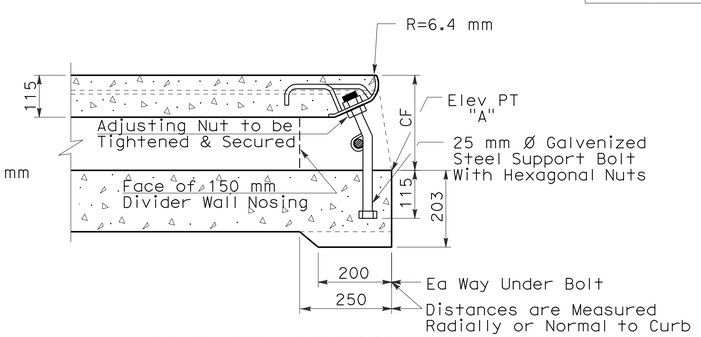

OUTLET DETAIL

1. When Required By Length of Opening or Construction Of a Circulart Curb Opening, Steel Angel May be Delivered in Sections and Butt Welded in Place.
2. Reinforce Steel Plate as per Inlet Detail Hereon.

TABLE A

SPAN (m)	MINOR CONCRETE MISC CONST (m^3)
1.50	1.10

SIDEWALK CULVERT

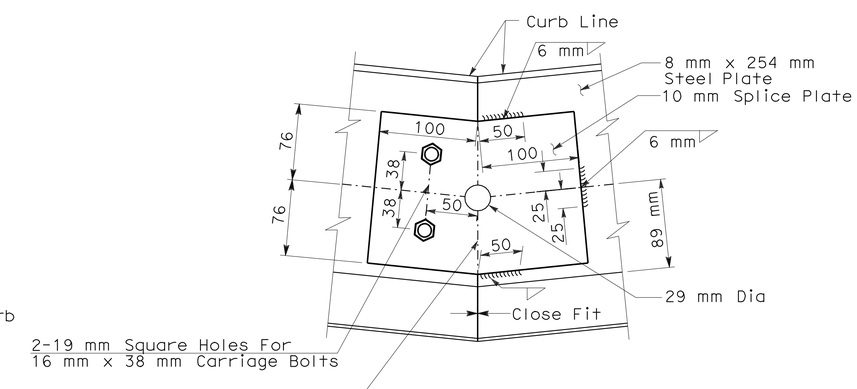

SECTION C-C

SPLICE PLATE ALTERNATE

ALL DIMENSIONS ARE IN MILLIMETERS UNLESS OTHERWISE SHOWN.

DRAINAGE DETAILS

NO SCALE

DD-31

REVISED BY	D. MASSA
DATE REVISED	04/01/09
CALCULATED-DESIGNED BY	M. ZAMORA
CHECKED BY	D. MASSA
FUNCTIONAL SUPERVISOR	DAVID FRANKE

STATE OF CALIFORNIA - DEPARTMENT OF TRANSPORTATION
06-DESIGN
Caltrans

LAST REVISION 04-07-10
DATE PLOTTED => 02-AUG-2010
TIME PLOTTED => 14:33

Dist	COUNTY	ROUTE	KILOMETER POST TOTAL PROJECT	SHEET No.	TOTAL SHEETS
05	Mon	101	R146.8/159.7	586	1402

Caltrans Metric

REGISTERED CIVIL ENGINEER 5-16-10 DATE

7-26-10
PLANS APPROVAL DATE

REGISTERED PROFESSIONAL ENGINEER DANIEL B. MASSA No. 59095 Exp. 6/30/11 CIVIL STATE OF CALIFORNIA

THE STATE OF CALIFORNIA OR ITS OFFICERS OR AGENTS SHALL NOT BE RESPONSIBLE FOR THE ACCURACY OR COMPLETENESS OF ELECTRONIC COPIES OF THIS PLAN SHEET.

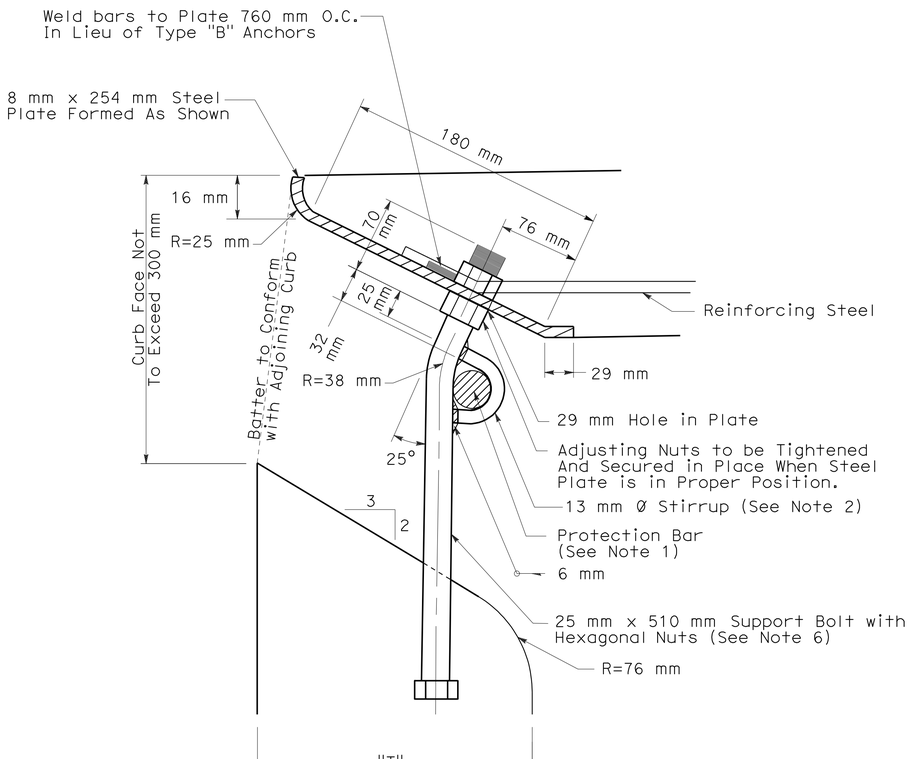

TYPE "A"
STEEL PLATE ANCHORAGE

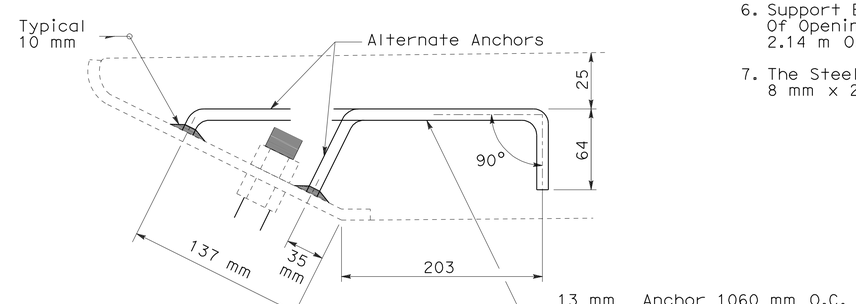

TYPE "B"
STEEL PLATE ANCHORAGE

NOTES

1. When Curb Face Exceeds 178 mm a Plain Round Steel Protection Bar 25 mm in Diameter Shall Be Installed. Bar Shall Be Embedded 127 mm at each end. When Length of Opening is 2.1 m or Less , Said Bar Shall Be Located 127 mm Behind C.F. And 102 mm Above Gutter Flow Line.
2. A Stirrup Shall Be Welded to Each Bolt When Both a Protection Bar and Support Bolt Are Required.
3. All Exposed Metal Parts Shall Be Galvanized.
4. When Required by Length of Opening Bulb Angle May Be Delivered in Sections and Butt Welded in Place. All Galvanizing damaged By Welding Shall Recieve Two Coats of Aluminum Paint.
5. Type A or Type B Anchorage May Be Used.
6. Support Bolts Shall Be Installed When Length Of Opening Exceeds 2.14 m, Spacing Shall be 2.14 m O.C. Max and 1.5 m O.C. Min.
7. The Steel Plate Shall Be Fabricated From 8 mm x 254 mm Universal Mill Plates.

ALL DIMENSIONS ARE IN MILLIMETERS
UNLESS OTHERWISE SHOWN.

DRAINAGE DETAILS

SIDEWALK CULVERT

NO SCALE

DD-32

STATE OF CALIFORNIA - DEPARTMENT OF TRANSPORTATION
Caltrans 06-DESIGN

FUNCTIONAL SUPERVISOR DAVID FRANKE
CALCULATED-DESIGNED BY MICHEAL ZAMORA
CHECKED BY DAN MASSA
REVISED BY D. MASSA
DATE REVISED 04/01/09

LAST REVISION 09-19-09
DATE PLOTTED => 02-AUG-2010
TIME PLOTTED => 14:33

Dist	COUNTY	ROUTE	KILOMETER POST TOTAL PROJECT	SHEET No.	TOTAL SHEETS
05	Mon	101	R146.8/159.7	587	1402

Eric Olson 5-16-10
REGISTERED CIVIL ENGINEER DATE

7-26-10
PLANS APPROVAL DATE

REGISTERED PROFESSIONAL ENGINEER ERIC H. OLSON No. 60801 Exp. 12/31/10 CIVIL STATE OF CALIFORNIA

THE STATE OF CALIFORNIA OR ITS OFFICERS OR AGENTS SHALL NOT BE RESPONSIBLE FOR THE ACCURACY OR COMPLETENESS OF ELECTRONIC COPIES OF THIS PLAN SHEET.

RSP LOCATIONS

ALIGNMENT	BEGIN/OFFSET	END/OFFSET	SLOPE	H	T	W	D	RSP (Facing, Method B)	RSP-FABRIC (Class 8)
								m^3	m^2
CHCEV	13+53.96/8.06 Rt	14+31.38/36.58 Rt	1:2	1.40	0.550	1.23	0.550	147.0	480.0
CH-2	191+95.00/18.00 Rt	193+50.00/5.95 Rt	1:2	2.55	0.550	1.23	0.550	965.0	1405.0
							Total	1112.0 *	1885.0 *

* Quantity included in Summary of Drainage Quantities on Sheet DQ-63

LEGEND:

Planting & Erosion Control Zone
(See "Landscape" Sheets)

NOTES:

1. Place RSP Fabric Throughout the Bottom of Excavated Trench & Anchor Beneath Any Existing Rock.
2. Conform G to Exist Slope or Exist Revetment at Each End and Vary T Accordingly.
3. Excavate Depth "D" or Less If Bedrock is Encountered.
4. Excavate Bank to a Uniform Slope Prior to Placing RSP Fabric & RSP.
5. See Planting Plan & Landscape Detail Sheet for Willow Poles in RSP locations.

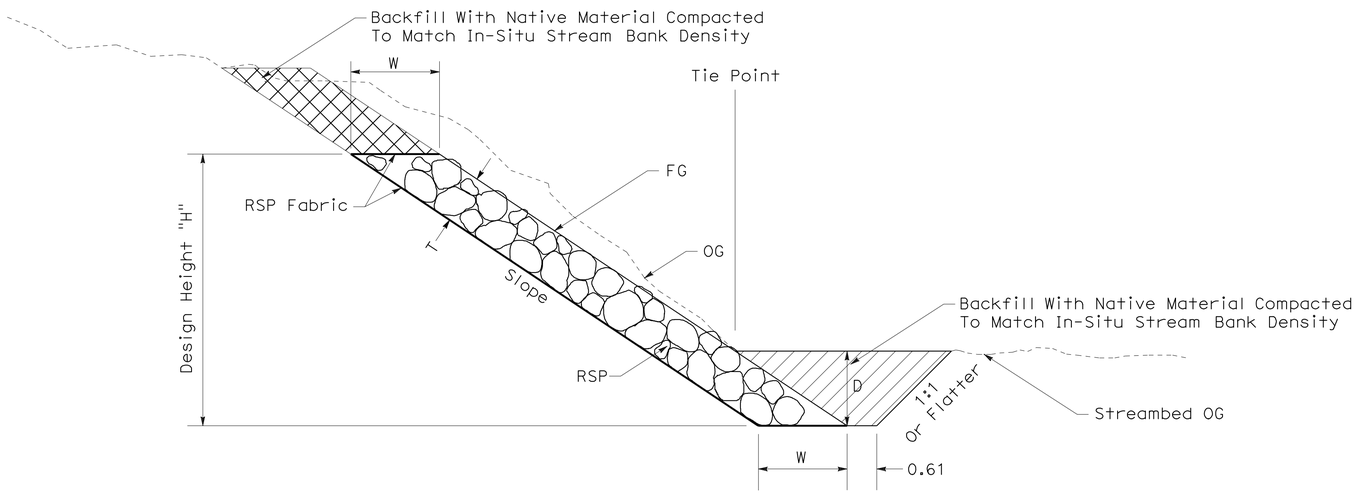

*See Note 3

RSP TYPICAL SECTION

ALL DIMENSIONS ARE IN METERS
UNLESS OTHERWISE SHOWN.

DRAINAGE DETAILS

NO SCALE

DD-33

STATE OF CALIFORNIA - DEPARTMENT OF TRANSPORTATION
Caltrans
06-DESIGN

FUNCTIONAL SUPERVISOR
DAVID FRANKE

CALCULATED-DESIGNED BY DAN MASSA
CHECKED BY CARLOS BLANCAS

REVISED BY D. MASSA
DATE REVISED 05/06/09

LAST REVISION 05-16-10
DATE PLOTTED => 02-AUG-2010
TIME PLOTTED => 14:33

Dist	COUNTY	ROUTE	KILOMETER POST TOTAL PROJECT	SHEET No.	TOTAL SHEETS
05	Mon	101	R146.8/159.7	588	1402

Eric Olson 5-16-10
REGISTERED CIVIL ENGINEER DATE

7-26-10
PLANS APPROVAL DATE

REGISTERED PROFESSIONAL ENGINEER ERIC H. OLSON No. 60801 Exp. 12/31/10 CIVIL STATE OF CALIFORNIA

THE STATE OF CALIFORNIA OR ITS OFFICERS OR AGENTS SHALL NOT BE RESPONSIBLE FOR THE ACCURACY OR COMPLETENESS OF ELECTRONIC COPIES OF THIS PLAN SHEET.

Caltrans Metric

LOCATION OF RSP CHANNEL

ALIGNMENT	BEGIN	END	B	H	T	W1	W2	RSP (FACING, METHOD B) (m^3)	RSP FABRIC (CLASS 8) (m^2)
CHCEV	18+16.00	17+80.00	VAR	0.85	0.550	1.23	2.27	156.0	490.0
CH-4	196+40.00	197+70.00	2.0	1.05	0.550	1.23	2.27	560.0	1795.0
CHCEV	18+17.14	18+11.23	8.0	1.10	0.800	3.30	3.30	80.0	186.0
SN	194+25.62	194+75.34	0.0	1.00	0.550	N/A	N/A	55.0	175.0
BR	32+53.20	33+44.14	0.0	1.15	0.550	0.0	0.0	261.0	577.0
BR	33+49.47	33+80.00	0.0	0.88	0.550	0.0	0.0	48.0	122.0
PSR	26+60.00	28+55.43	0.0	0.80	0.550	0.0	0.0	343.0	855.0
PL	29+41.74	31+26.05	0.0	0.80	0.550	0.0	0.0	251.0	668.0
PL	31+64.90	33+09.90	0.0	0.80	0.550	0.0	0.0	206.0	548.0
							Total	1960.0 *	5416.0 *

* Quantity included in Summary of Drainage Quantities on Sheet DQ-63

NOTES:

1. Place RSP Fabric Throughout The Bottom Of Excavated Trench & Anchor Beneath Any Existing Rock.
2. Confrom FG to Exist Slope or Exist Revetment At Each End and Vary T Accordingly.
3. Excavate Bank to a Unifrom Slope Prior to Placing RSP Fabric & RSP.

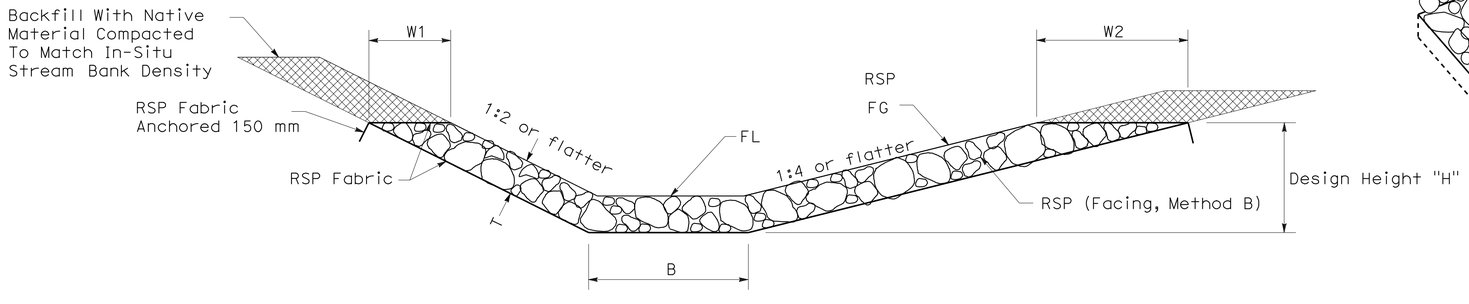

RSP CHANNEL

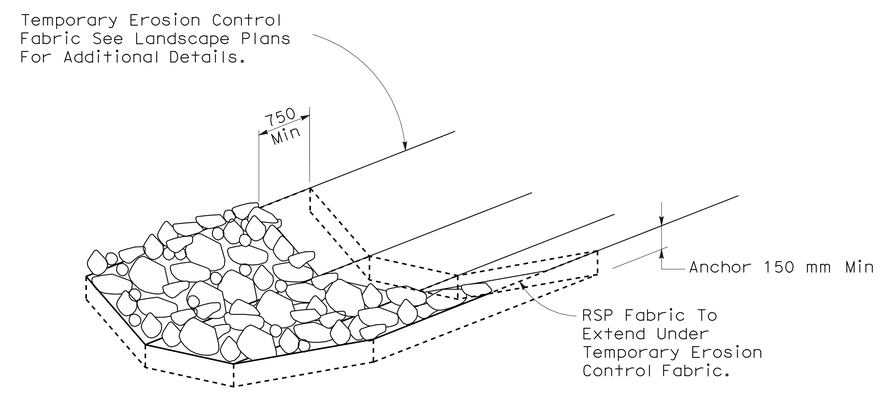

ALL DIMENSIONS ARE IN METERS UNLESS OTHERWISE SHOWN.

DRAINAGE DETAILS

NO SCALE

DD-34

STATE OF CALIFORNIA - DEPARTMENT OF TRANSPORTATION
Caltrans
06-DESIGN

FUNCTIONAL SUPERVISOR: DAVID FRANKE
CALCULATED-DESIGNED BY: CARLOS BLANCAS
CHECKED BY: DAN MASSA
REVISED BY: D. MASSA
DATE REVISED: 05/06/09

LAST REVISION 05-16-10
DATE PLOTTED => 02-AUG-2010
TIME PLOTTED => 14:34

Dist	COUNTY	ROUTE	KILOMETER POST TOTAL PROJECT	SHEET No.	TOTAL SHEETS
05	Mon	101	R146.8/159.7	589	1402

REGISTERED CIVIL ENGINEER — DATE 5-16-10

7-26-10
PLANS APPROVAL DATE

REGISTERED PROFESSIONAL ENGINEER — DANIEL B. MASSA No. 59095 Exp. 6/30/11 CIVIL — STATE OF CALIFORNIA

THE STATE OF CALIFORNIA OR ITS OFFICERS OR AGENTS SHALL NOT BE RESPONSIBLE FOR THE ACCURACY OR COMPLETENESS OF ELECTRONIC COPIES OF THIS PLAN SHEET.

Caltrans Metric

* Standard Manhole

Case I A=1219 mm

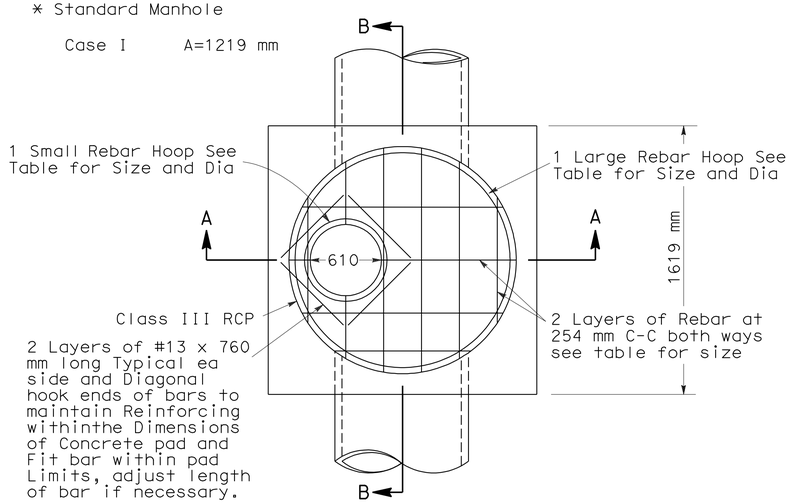

PLAN

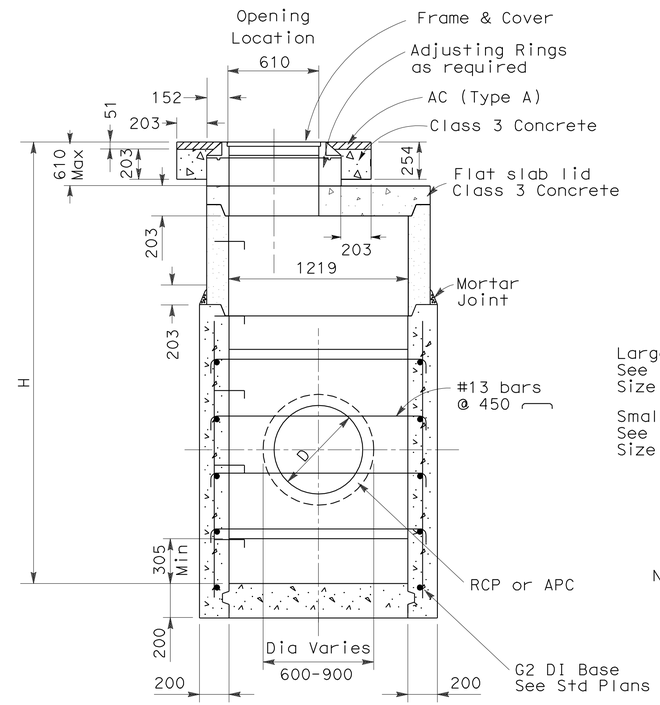

SECTION A-A

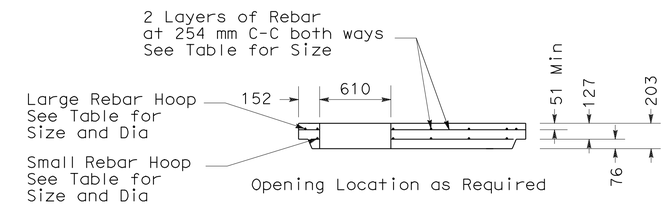

FLAT SLAB LID

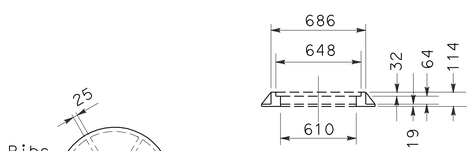

SECTION OF FRAME

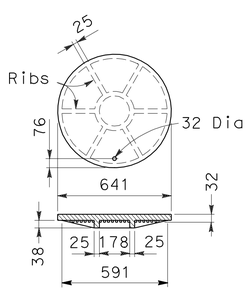

COVER

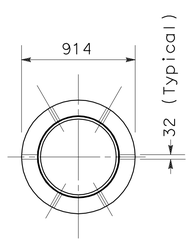

PLAN OF FRAME

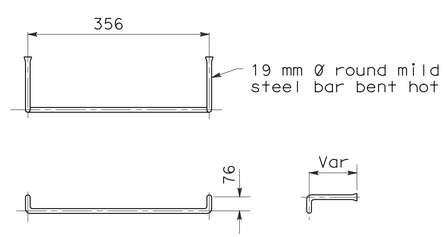

STEP DETAIL

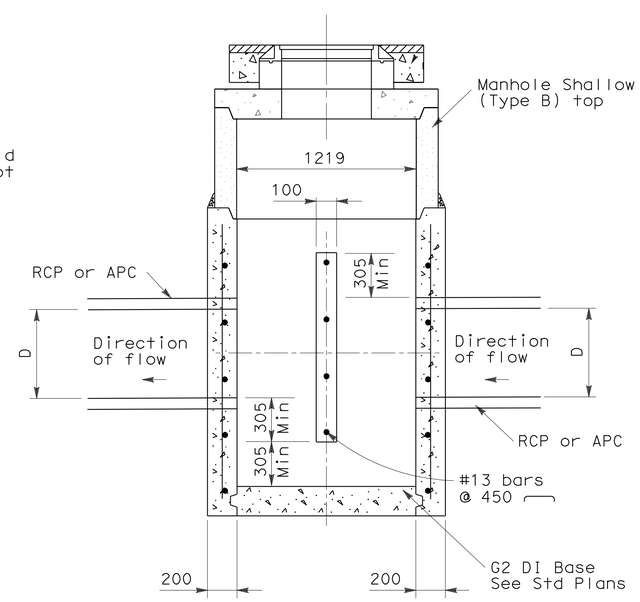

SECTION B-B

Manhole Dia	Grid Bar Size	Hoop Bar Size	Small Hoop Dia	Large Hoop Dia
1219	13	13	711	1372

NOTES:

1. The manhole frame and cover shall be made of cast iron.
2. Steps shall be installed when manhole height exceeds 750 mm. Install steps with lowest rung 400 mm above the floor and highest rung not more than 250 mm below top of cover. The distance between steps shall not exceed 300 mm and shall be uniform throughout the height of the manhole. Steps shall be placed directly below manhole frame and cover.
3. An alternate step may be used subject to the approval of the Engineer.
4. All steps shall be firmly and rigidly set with epoxy grout or epoxy.
5. Steps shall be galvanized after bending.
6. Manhole cover design, as a minimum, is to have the words "Storm Sewer" or "Storm Drain" molded into the cover.
7. Interior of the manhole shall have a smooth troweled surface.
8. Flat slab lids shall be oriented to place frames & covers away from wheel tracks.
9. All joints between precast sections shall be mortared.
10. Precast pipe, adjusting rings, and flat slab lids should be constructed in accordance with American Society for Testing and Materials C-478M.
11. Wall reinforcing shall be #13 bars @ 450 mm centers placed 40 mm clear to inside of box unless otherwise noted.
12. See Std. Plan D73 for additional details.

ALL DIMENSIONS ARE IN MILLIMETERS UNLESS OTHERWISE SHOWN.

DRAINAGE DETAILS

MANHOLE-TYPE SO

NO SCALE

DD-35

STATE OF CALIFORNIA - DEPARTMENT OF TRANSPORTATION
Caltrans
06-DESIGN

FUNCTIONAL SUPERVISOR: DAVID FRANKE

CALCULATED-DESIGNED BY: CARLOS BLANCAS
CHECKED BY: DAN MASSA

REVISED BY: D. MASSA
DATE REVISED: 04/01/09

LAST REVISION 04-07-10 | DATE PLOTTED => 02-AUG-2010 | TIME PLOTTED => 14:34

Dist	COUNTY	ROUTE	KILOMETER POST TOTAL PROJECT	SHEET No.	TOTAL SHEETS
05	Mon	101	R146.8/159.7	590	1402

Caltrans Metric

Eric Olson 5-16-10
REGISTERED CIVIL ENGINEER DATE

7-26-10
PLANS APPROVAL DATE

REGISTERED PROFESSIONAL ENGINEER ERIC H. OLSON No. 60801 Exp. 12/31/10 CIVIL STATE OF CALIFORNIA

THE STATE OF CALIFORNIA OR ITS OFFICERS OR AGENTS SHALL NOT BE RESPONSIBLE FOR THE ACCURACY OR COMPLETENESS OF ELECTRONIC COPIES OF THIS PLAN SHEET.

LOCATION OF PCC GUTTER

PCC GUTTER	BEGIN (Sta / Offset / Elev)	END (Sta / Offset / Elev)	LENGTH	Minor Conc Misc Const
			m	m^3
L	26+80 "PSR" Line / 22.60 Lt / 22.960	28+53.63 "PSR" Line / 14.67 Lt / 12.339	199.00	26.67
A	19+40 "CHCEV" Line / 10.50 Lt / 35.00	22+46.00 "CHCEV" Line / 14.48 Lt / 37.00	302.00	65.84
B	19+40 "CHCEV" Line / 10.53 Rt / 141.374	21+60.00 "CHCEV" Line / 10.53 Rt / 146.266	231.00	50.36
C	16+12.000 "CHCEV" Line / 12.60 Rt / 129.567	17+30.000 "CHCEV" Line / 10.67 Rt / 32.046	120.00	26.16
D	16+14.750 "CHCEV" Line / 47.52 Rt / 142.248	17+04.000 "CHCEV" Line / 45.90 Rt / 143.240	81.00	17.66
E	195+53.00 "CH-3" Line / 41.97 Lt / 141.246	196+15.484 "CH-3" Line / 58.96 Lt / 149.93	66.00	14.39
F	195+53.000 "CH-3" Line / 12.98 Lt / 129.82	198+25.01 "CH-3" Line / 28.44 Lt / 143.593	250.00	54.50
G	20+22.05 "CHCEV" Line / 45.83 Lt / 157.965	22+46.00 "CHCEV" Line / 27.28 Lt / 150.379	212.00	33.28
H	20+32.05 "CHCEV" Line / 59.47 Lt / 164.001	22+46.00 "CHCEV" Line / 39.28 Lt / 155.379	198.00	31.10
I	22+06.87 "CHCEV" Line / 60.41 Lt / 164.748	22+44.00 "CHCEV" Line / 51.81 Lt / 160.474	33.00	5.18
J	20+40.00 "CHCEV" Line / 59.98 Lt / 164.518	21+41.77 "CHCEV" Line / 72.02 Lt / 170.669	96.00	15.07
K	196+40.00 "CH-3" Line / 43.14 Lt / 143.163	198+06.00 "CH-3" Line / 45.76 Lt / 149.782	141.00	12.61
TOTAL			1929.00	352.82 *

* Quantity included in Summary of Drainage Quantities on Sheet DQ-63

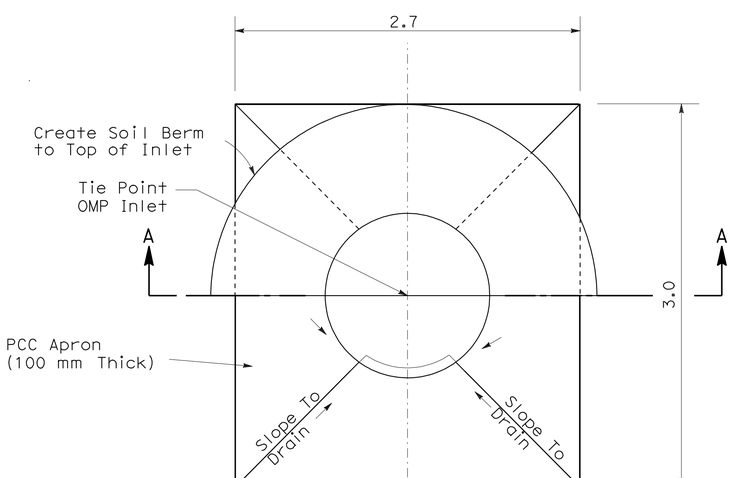

PLAN

OMP DRAINAGE INLET AND PCC APRON

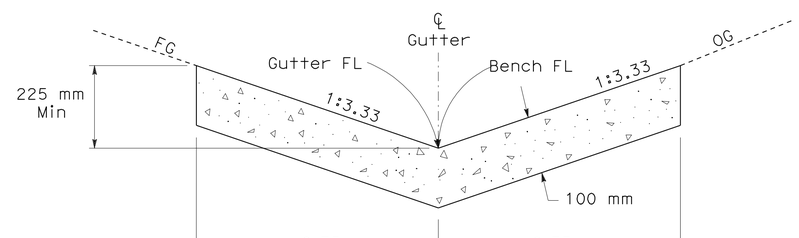

SECTION B-B

PCC GUTTER

2 m Bench @ CHCEV
PCC Gutters G, H, I, J

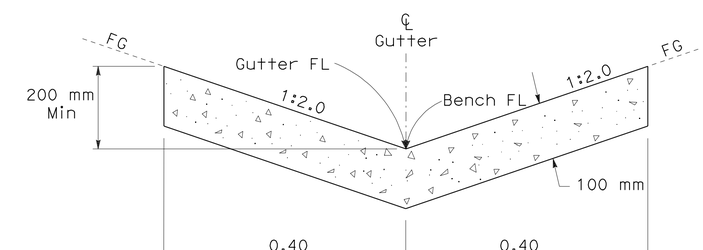

SECTION B-B

PCC GUTTER

Top of Cut CH-3
PCC Gutter K, L

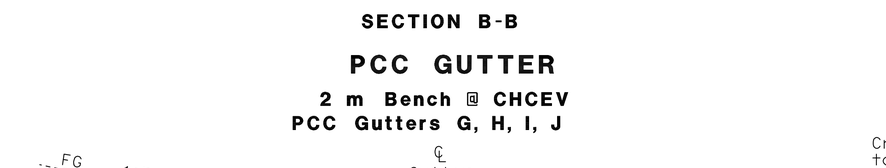

SECTION B-B

PCC GUTTER

6 m Bench @ CHCEV & CH-3
PCC Gutters A, B, C, D, E

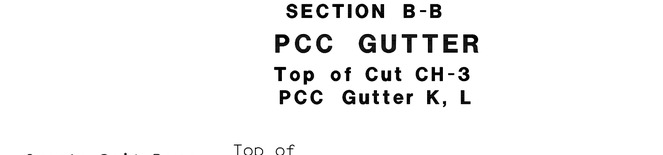

SECTION A-A

ALL DIMENSIONS ARE IN METERS UNLESS OTHERWISE SHOWN.

DRAINAGE DETAILS

NO SCALE

DD-36

STATE OF CALIFORNIA - DEPARTMENT OF TRANSPORTATION
Caltrans
06-DESIGN
FUNCTIONAL SUPERVISOR DAVID FRANKE
CALCULATED-DESIGNED BY M. ZAMORA
CHECKED BY D. MASSA
REVISED BY D. MASSA
DATE REVISED 05/06/09

LAST REVISION 05-16-10
DATE PLOTTED => 02-AUG-2010
TIME PLOTTED => 14:48

Dist	COUNTY	ROUTE	KILOMETER POST TOTAL PROJECT	SHEET No.	TOTAL SHEETS
05	Mon	101	R146.8/159.7	591	1402

Caltrans Metric

Eric Olson 5-16-10
REGISTERED CIVIL ENGINEER DATE

7-26-10
PLANS APPROVAL DATE

REGISTERED PROFESSIONAL ENGINEER ERIC H. OLSON No. 60801 Exp. 12/31/10 CIVIL STATE OF CALIFORNIA

THE STATE OF CALIFORNIA OR ITS OFFICERS OR AGENTS SHALL NOT BE RESPONSIBLE FOR THE ACCURACY OR COMPLETENESS OF ELECTRONIC COPIES OF THIS PLAN SHEET.

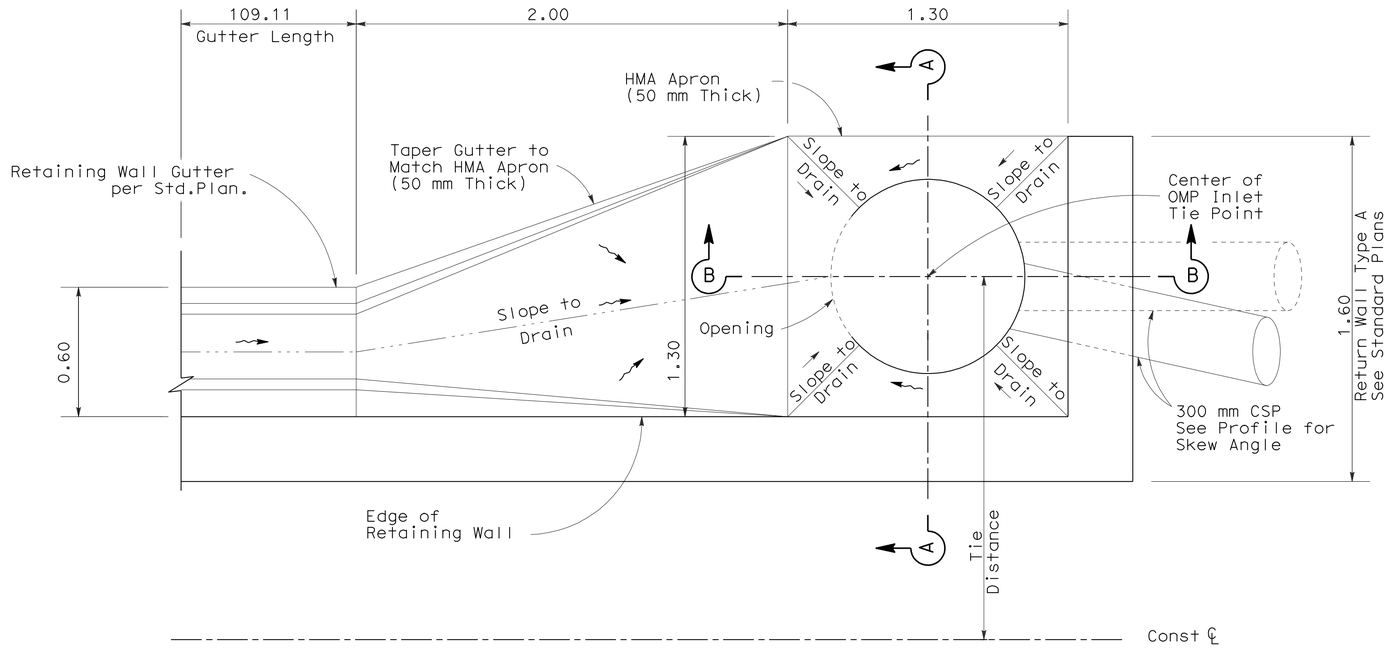

PLAN

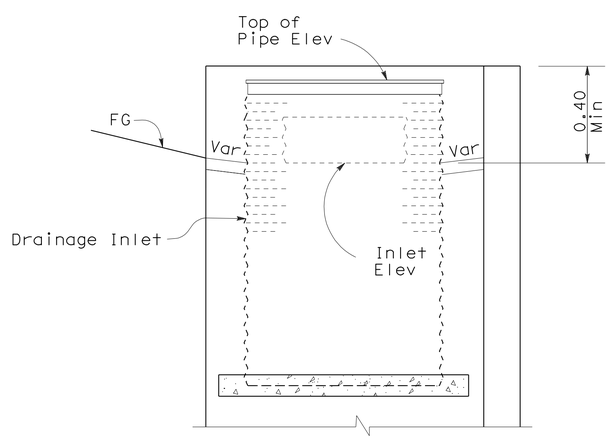

SECTION A-A

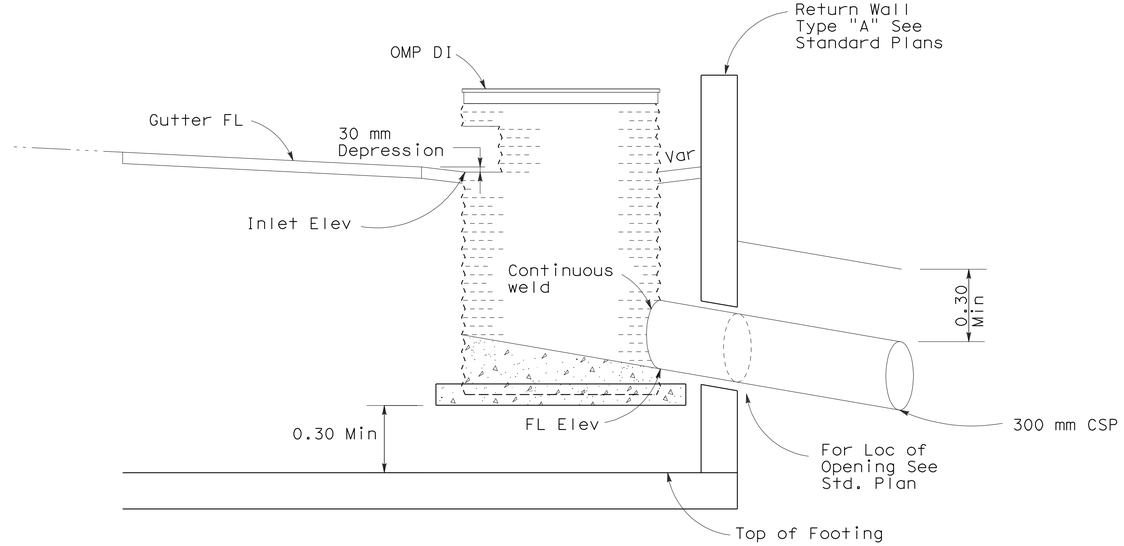

SECTION B-B

ALL DIMENSIONS ARE IN METERS
UNLESS OTHERWISE SHOWN.

DRAINAGE DETAILS

NO SCALE

DD-37

OMP DRAINAGE INLET
BEHIND RETAINING WALL

STATE OF CALIFORNIA - DEPARTMENT OF TRANSPORTATION
Caltrans
06-DESIGN

FUNCTIONAL SUPERVISOR: DAVID FRANKE
CALCULATED-DESIGNED BY: CARLOS BLANCAS
CHECKED BY: ERIC OLSON
REVISED BY: D. MASSA
DATE REVISED:

LAST REVISION 05-16-10 | DATE PLOTTED => 02-AUG-2010 | TIME PLOTTED => 14:34

Dist	COUNTY	ROUTE	KILOMETER POST TOTAL PROJECT	SHEET No.	TOTAL SHEETS
05	Mon	101	R146.8/159.7	592	1402

Caltrans Metric

Eric Olson 5-16-10
REGISTERED CIVIL ENGINEER DATE

7-26-10
PLANS APPROVAL DATE

REGISTERED PROFESSIONAL ENGINEER ERIC H. OLSON No. 60801 Exp. 12/31/10 CIVIL STATE OF CALIFORNIA

THE STATE OF CALIFORNIA OR ITS OFFICERS OR AGENTS SHALL NOT BE RESPONSIBLE FOR THE ACCURACY OR COMPLETENESS OF ELECTRONIC COPIES OF THIS PLAN SHEET.

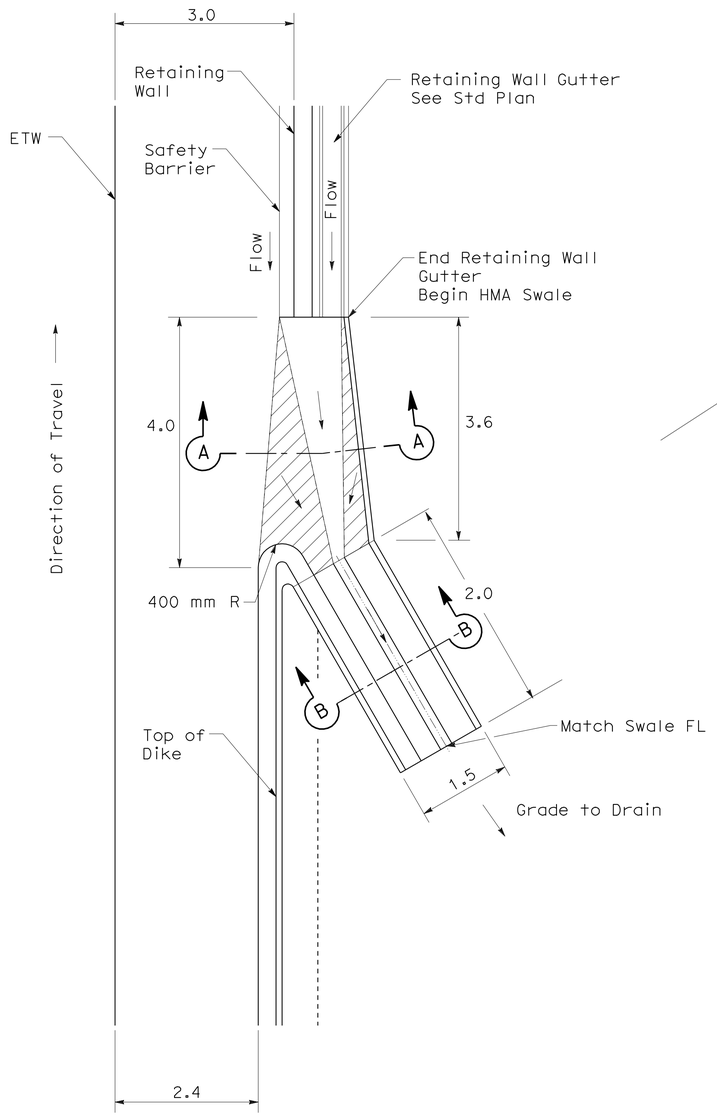

PLAN

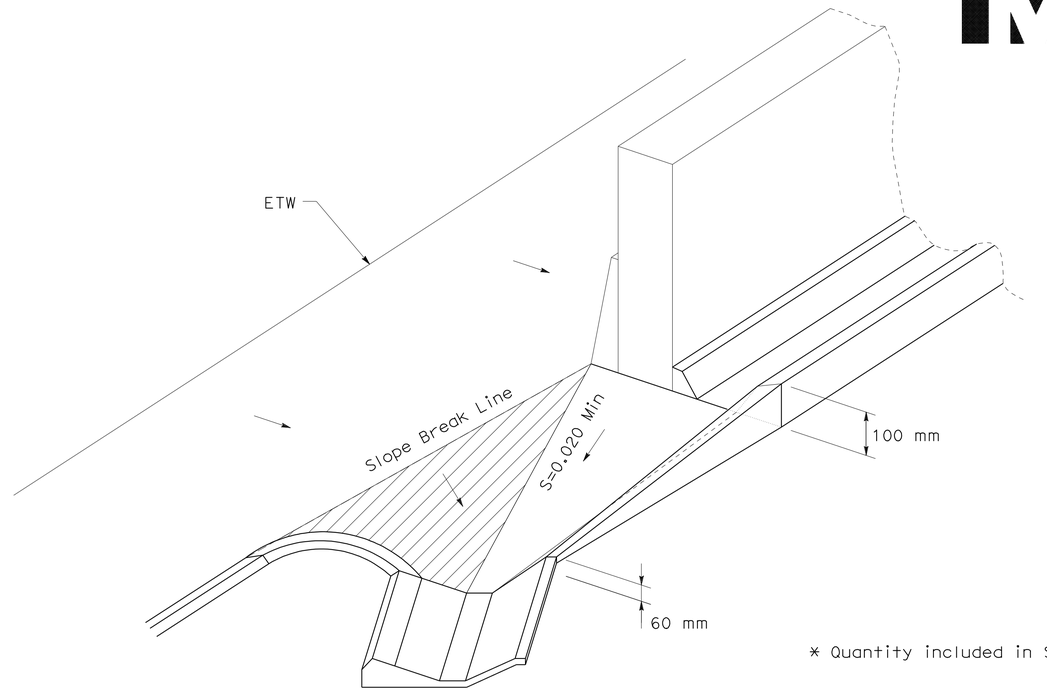

TABLE A

	PLACE HMA (Misc AREA)
	m^2
TOTAL	7.58 *

* Quantity included in Summary of Drainage Quantities on Sheet DQ-63

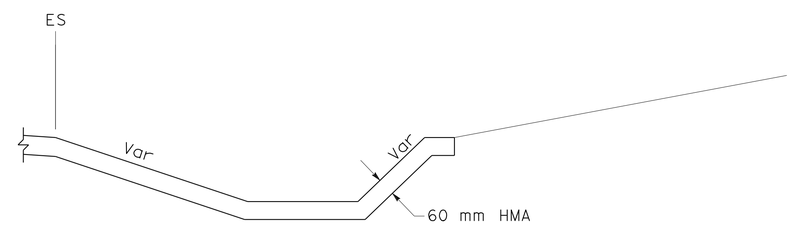

SECTION A-A

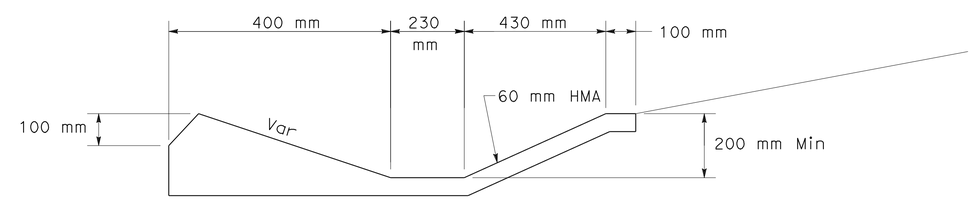

SECTION B-B

MODIFIED HMA OVERSIDE DRAIN

ALL DIMENSIONS ARE IN METERS UNLESS OTHERWISE SHOWN.

DRAINAGE DETAILS

NO SCALE **DD-38**

STATE OF CALIFORNIA - DEPARTMENT OF TRANSPORTATION
Caltrans 06-DESIGN

FUNCTIONAL SUPERVISOR DAVID FRANKE
CALCULATED-DESIGNED BY
CHECKED BY
REVISED BY D. MASSA
DATE REVISED 05/06/09
CARLOS BLANCAS
ERIC OLSON

LAST REVISION 05-16-10 DATE PLOTTED => 10-AUG-2010 TIME PLOTTED => 13:29

Dist	COUNTY	ROUTE	KILOMETER POST TOTAL PROJECT	SHEET No.	TOTAL SHEETS
05	Mon	101	R146.8/159.7	593	1402

Caltrans Metric

REGISTERED CIVIL ENGINEER 5-16-10 DATE

7-26-10
PLANS APPROVAL DATE

REGISTERED PROFESSIONAL ENGINEER DANIEL B. MASSA No. 59095 Exp. 6/30/11 CIVIL STATE OF CALIFORNIA

THE STATE OF CALIFORNIA OR ITS OFFICERS OR AGENTS SHALL NOT BE RESPONSIBLE FOR THE ACCURACY OR COMPLETENESS OF ELECTRONIC COPIES OF THIS PLAN SHEET.

NOTE: 1) Pipes Shall Be Centered On The Interior Wall of Each Bay.

Cable Railing (m)
m
12.0 *

* See Q-11 for Quantities

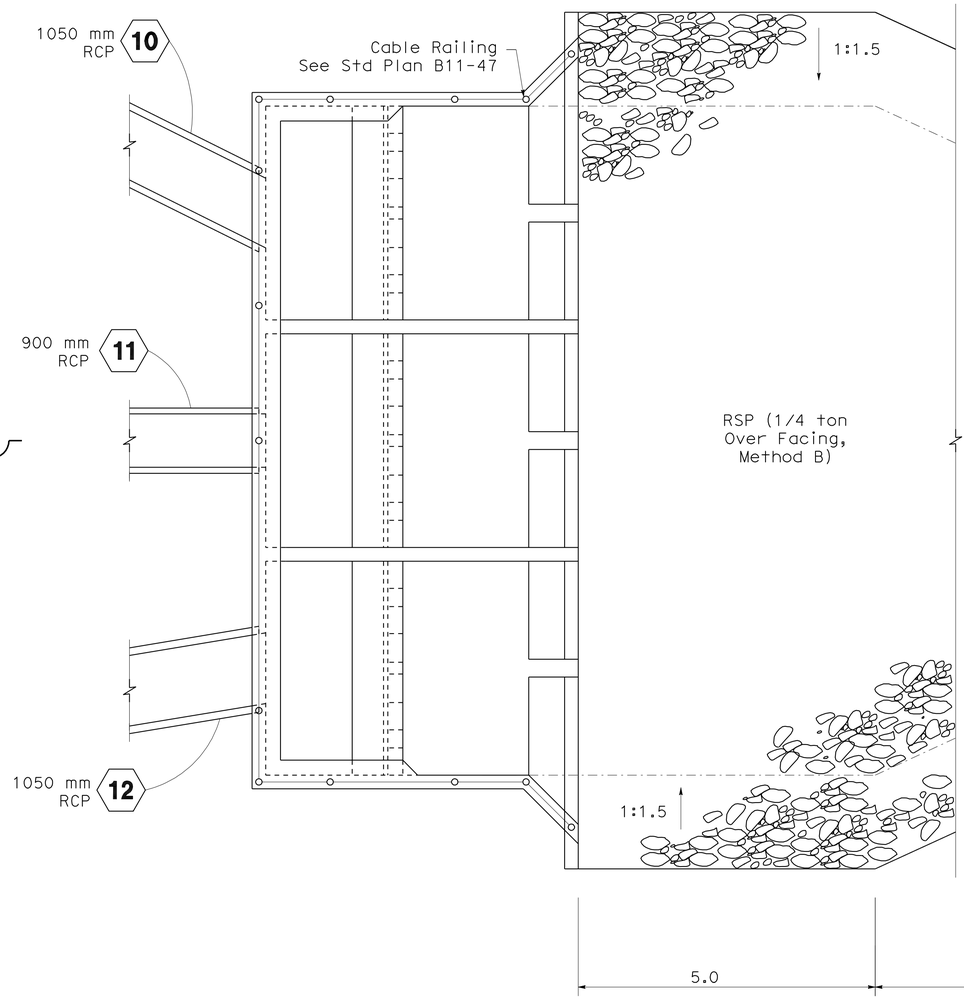

PLAN

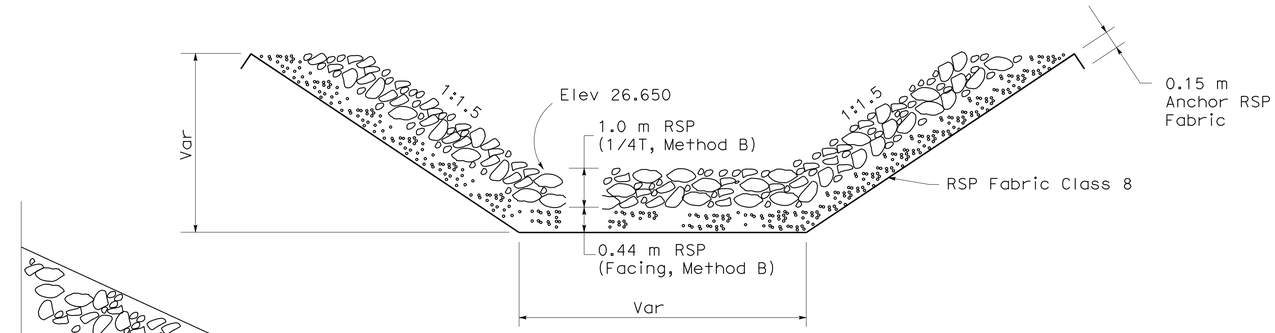

SECTION B-B

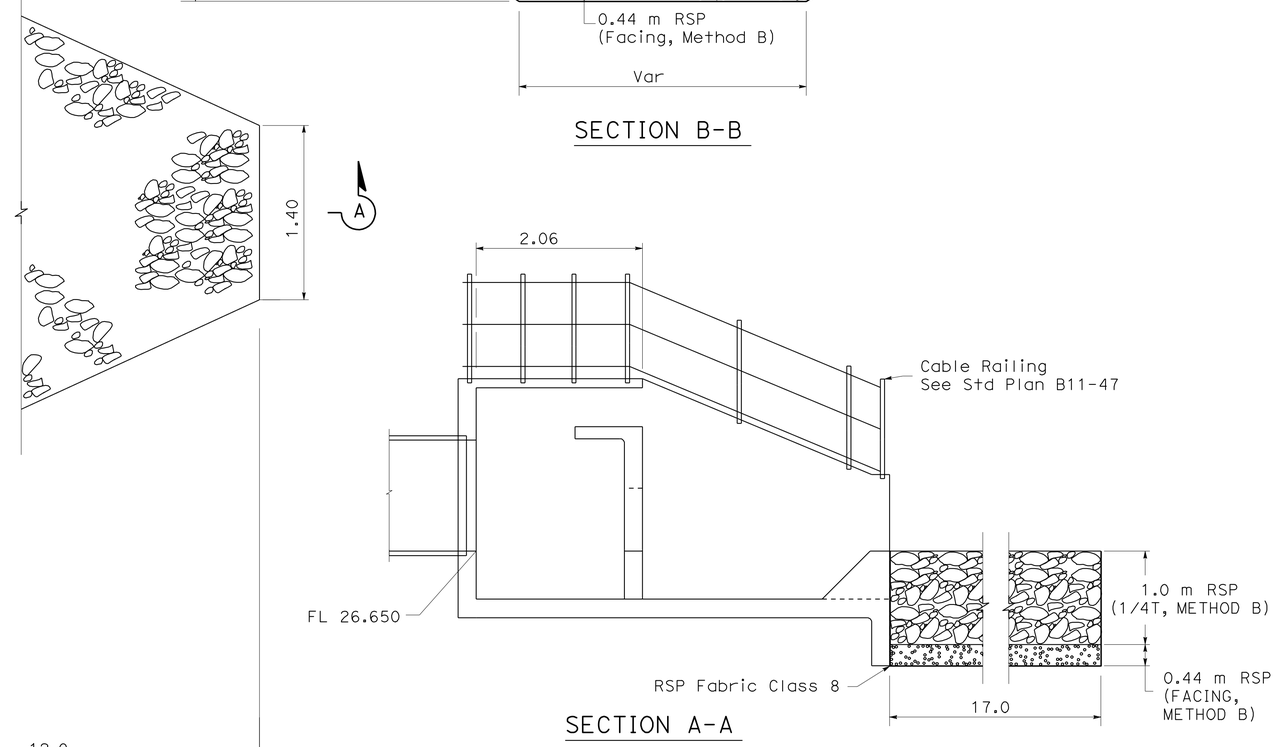

SECTION A-A

ALL DIMENSIONS ARE IN METERS UNLESS OTHERWISE SHOWN.

DRAINAGE DETAILS

ENERGY DISSIPATOR RSP

NO SCALE

DD-39

STATE OF CALIFORNIA - DEPARTMENT OF TRANSPORTATION
Caltrans
06-DESIGN

FUNCTIONAL SUPERVISOR: DAVID FRANKE
CALCULATED-DESIGNED BY: CARLOS BLANCAS
CHECKED BY: DAN MASSA
REVISED BY: D. MASSA
DATE REVISED: 05/06/09

LAST REVISION 05-16-10
DATE PLOTTED => 02-AUG-2010
TIME PLOTTED => 14:34

Dist	COUNTY	ROUTE	KILOMETER POST TOTAL PROJECT	SHEET No.	TOTAL SHEETS
05	Mon	101	R146.8/159.7	594	1402

REGISTERED CIVIL ENGINEER — DATE 5-16-10

7-26-10
PLANS APPROVAL DATE

REGISTERED PROFESSIONAL ENGINEER — DANIEL B. MASSA No. 59095 Exp. 6/30/11 CIVIL — STATE OF CALIFORNIA

THE STATE OF CALIFORNIA OR ITS OFFICERS OR AGENTS SHALL NOT BE RESPONSIBLE FOR THE ACCURACY OR COMPLETENESS OF ELECTRONIC COPIES OF THIS PLAN SHEET.

Caltrans Metric

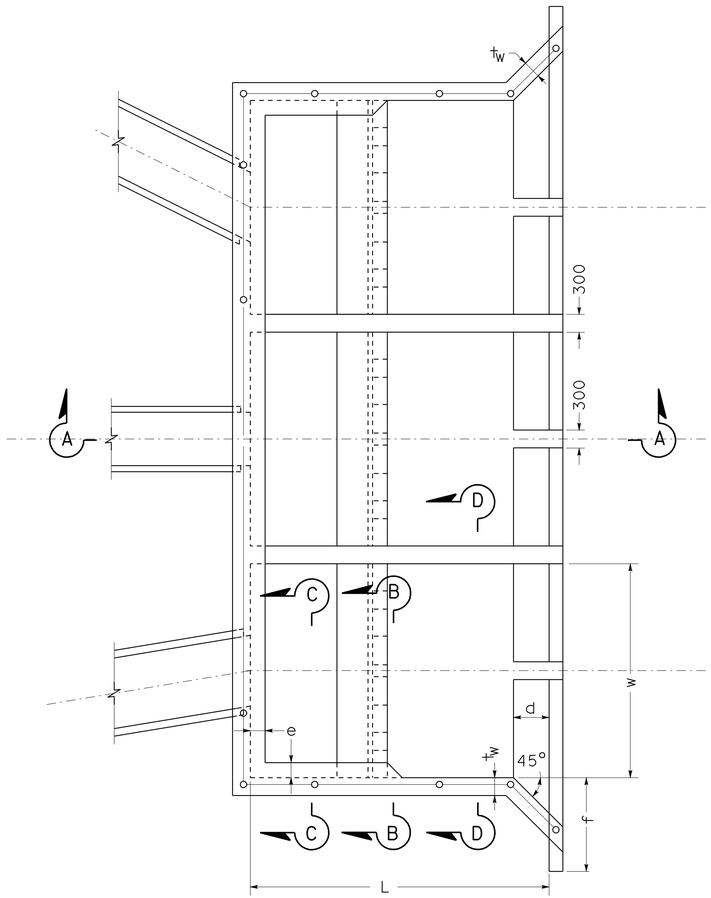

PLAN

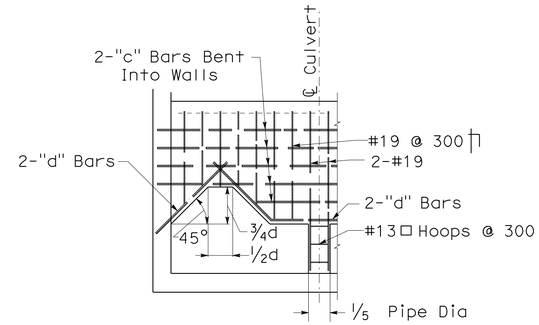

SECTION B-B

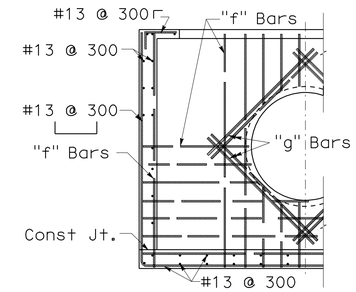

SECTION C-C

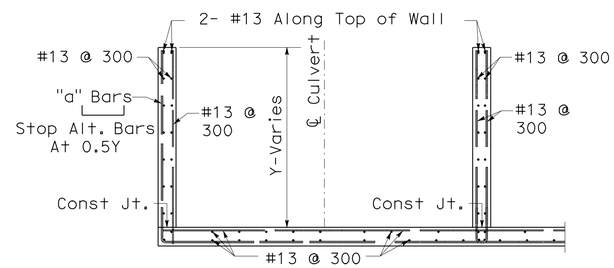

SECTION D-D

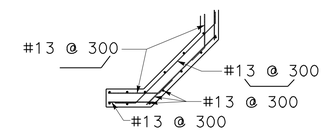

SECTION E-E

TABLE A

Type	III
Max Capacity **CMS	150
W	3.600
H	2.743
L	4.775
a	2.057
b	2.718
c	1.499
d	0.600
e	0.250
f	1.346
g	1.346
t_w	0.300
t_f	0.241
t_b	0.250
t_p	0.200
"a" Bars	#25 @ 300
"b" Bars	#13 @ 300
"c" Bars	#29 @ 300
"d" Bars	#29
"e" Bars	Total 3
"f" Bars	#22 @ 300
"g" Bars	#29
Misc IRON & STEEL (kg)	3920 (N)
MINOR CONCRETE MINOR Str (m^3)	54.00 ***

**CMS= Cubic Meters Per Second

*** Quantity included in Summary of Drainage Quantities on Sheet DQ-63

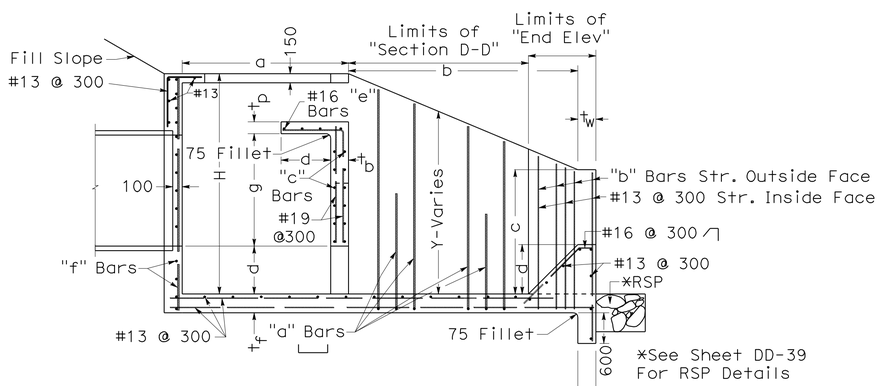

SECTION A-A

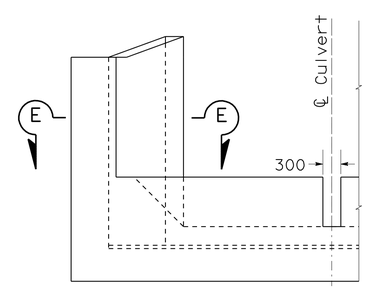

END ELEVATION

ENERGY DISSIPATOR

NOT TO SCALE

ALL DIMENSIONS ARE IN METERS UNLESS OTHERWISE SHOWN.

DRAINAGE DETAILS

NO SCALE

DD-40

STATE OF CALIFORNIA - DEPARTMENT OF TRANSPORTATION
Caltrans
06-DESIGN

FUNCTIONAL SUPERVISOR: DAVID FRANKE
CALCULATED-DESIGNED BY: CARLOS BLANCAS
CHECKED BY: DAN MASSA
REVISED BY: D. MASSA
DATE REVISED: 05/06/09

LAST REVISION: 05-16-10
DATE PLOTTED => 02-AUG-2010
TIME PLOTTED => 14:34

Dist	COUNTY	ROUTE	KILOMETER POST TOTAL PROJECT	SHEET No.	TOTAL SHEETS
05	Mon	101	R146.8/159.7	595	1402

Eric Olson 5-16-10
REGISTERED CIVIL ENGINEER DATE

7-26-10
PLANS APPROVAL DATE

REGISTERED PROFESSIONAL ENGINEER ERIC H. OLSON No. 60801 Exp. 12/31/10 CIVIL STATE OF CALIFORNIA

THE STATE OF CALIFORNIA OR ITS OFFICERS OR AGENTS SHALL NOT BE RESPONSIBLE FOR THE ACCURACY OR COMPLETENESS OF ELECTRONIC COPIES OF THIS PLAN SHEET.

Caltrans Metric

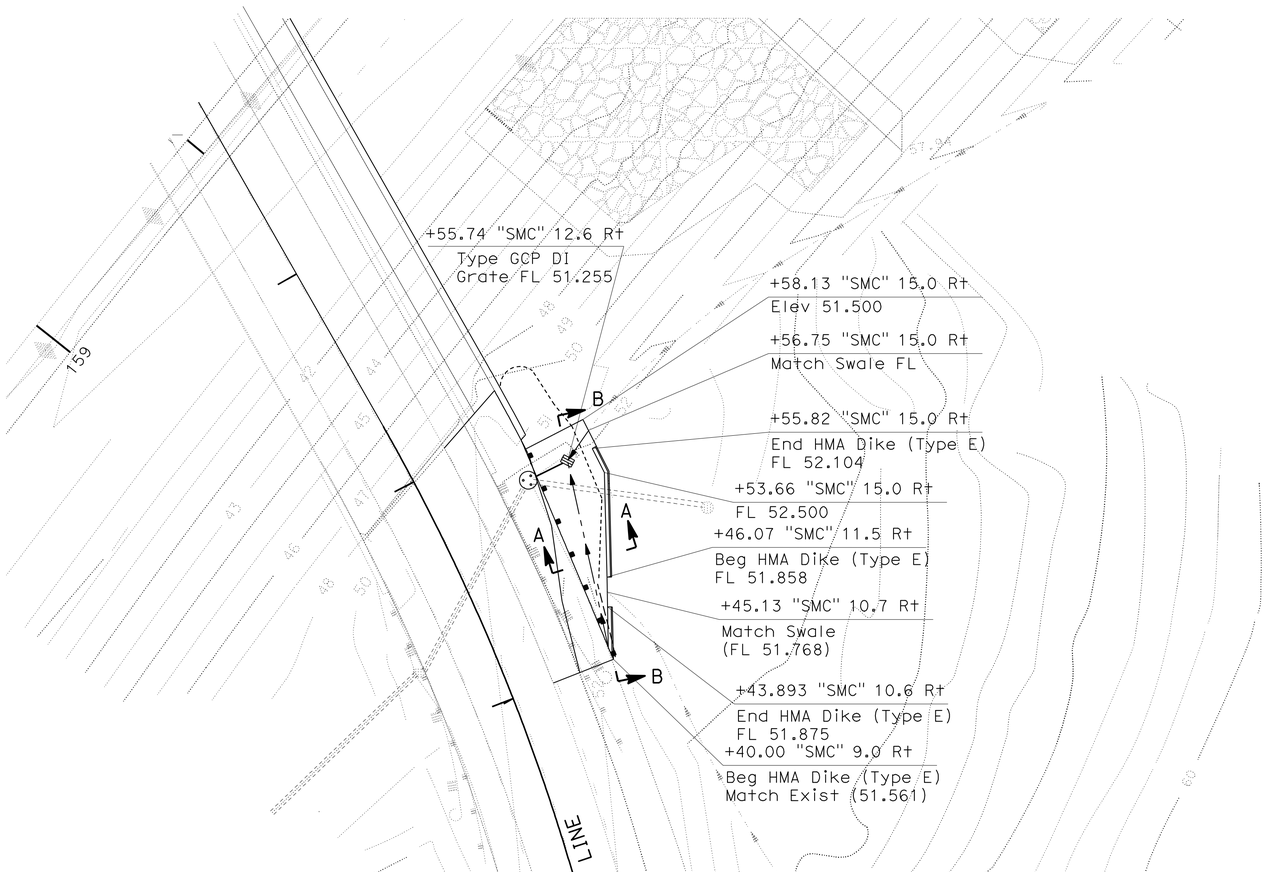

DRAINAGE SYSTEM 175

Sta 15+55.74 "SMC"

TABLE A

HMA Dike (Type E) (m)
14.7 *

* See Q-13 for Quantities

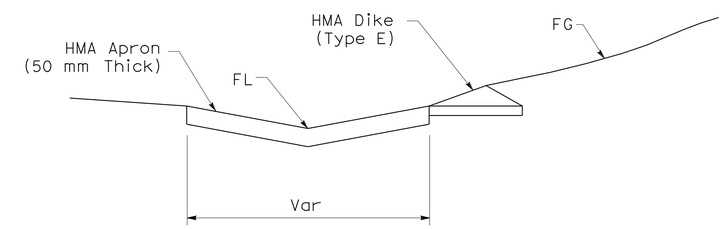

SECTION A-A

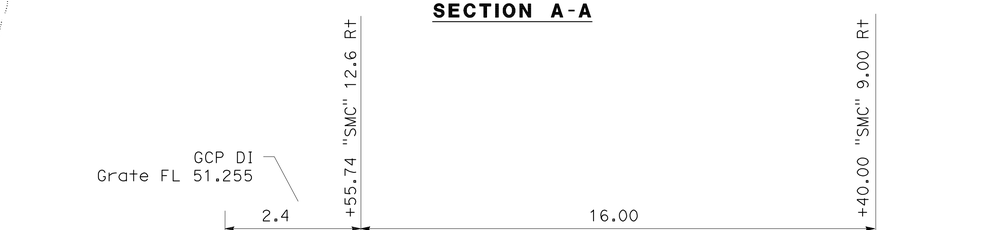

SECTION B-B

ALL DIMENSIONS ARE IN METERS
UNLESS OTHERWISE SHOWN.

DRAINAGE DETAILS

NO SCALE **DD-41**

STATE OF CALIFORNIA - DEPARTMENT OF TRANSPORTATION
Caltrans
06-DESIGN

FUNCTIONAL SUPERVISOR: DAVID FRANKE
CALCULATED-DESIGNED BY: CARLOS BLANCAS
CHECKED BY: ERIC OLSON
REVISED BY: D. MASSA
DATE REVISED: 05/06/09

LAST REVISION 05-16-10 | DATE PLOTTED => 02-AUG-2010 | TIME PLOTTED => 14:34

Dist	COUNTY	ROUTE	KILOMETER POST TOTAL PROJECT	SHEET No.	TOTAL SHEETS
05	Mon	101	R146.8/159.7	596	1402

Eric Olson 5-16-10
REGISTERED CIVIL ENGINEER DATE

7-26-10
PLANS APPROVAL DATE

REGISTERED PROFESSIONAL ENGINEER ERIC H. OLSON No. 60801 Exp. 12/31/10 CIVIL STATE OF CALIFORNIA

THE STATE OF CALIFORNIA OR ITS OFFICERS OR AGENTS SHALL NOT BE RESPONSIBLE FOR THE ACCURACY OR COMPLETENESS OF ELECTRONIC COPIES OF THIS PLAN SHEET.

Caltrans Metric

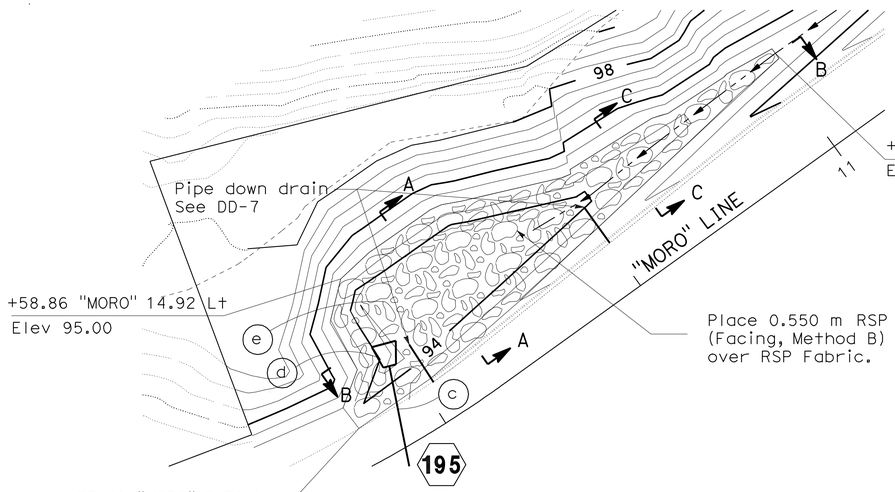

RSP TUB 1
"MORO" LINE

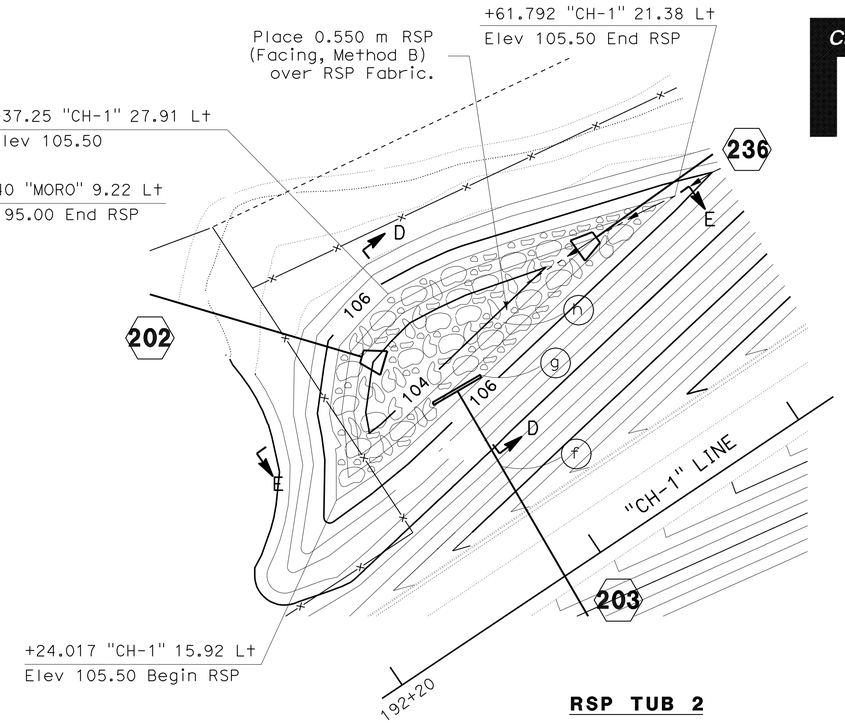

RSP TUB 2
"CH-1" LINE

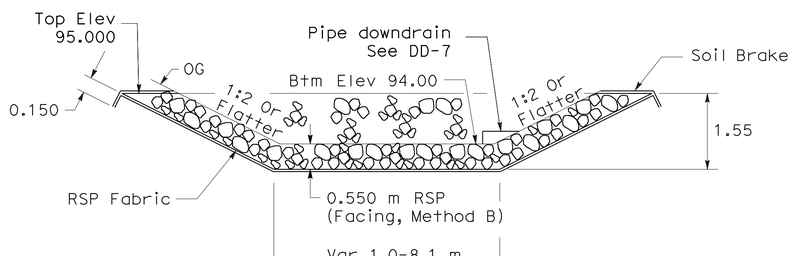

SECTION A-A

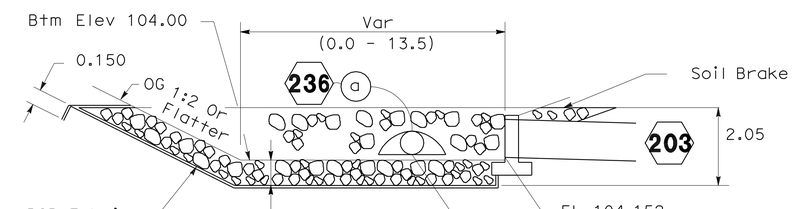

SECTION D-D

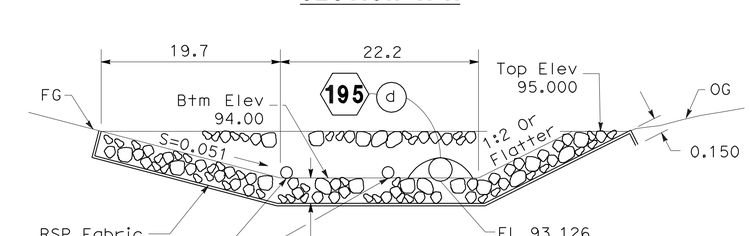

SECTION B-B

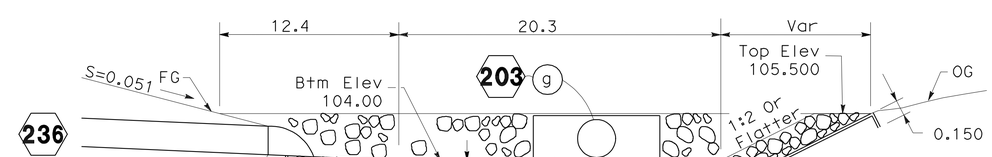

SECTION E-E

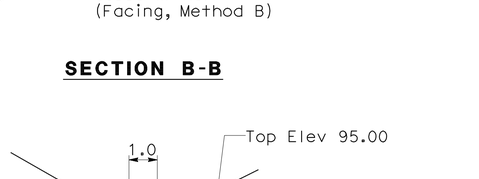

SECTION C-C

ALL DIMENSIONS ARE IN METERS
UNLESS OTHERWISE SHOWN.

DRAINAGE DETAILS

RSP TUB

NO SCALE

DD-42

STATE OF CALIFORNIA - DEPARTMENT OF TRANSPORTATION	Caltrans
FUNCTIONAL SUPERVISOR	DAVID FRANKE
06-DESIGN	
CALCULATED-DESIGNED BY	CARLOS BLANCAS
CHECKED BY	DAN MASSA
REVISED BY	D. MASSA
DATE REVISED	05/06/09

LAST REVISION 05-16-10 | DATE PLOTTED => 02-AUG-2010 | TIME PLOTTED => 14:35

Dist	COUNTY	ROUTE	KILOMETER POST TOTAL PROJECT	SHEET No.	TOTAL SHEETS
05	Mon	101	R146.8/159.7	597	1402

Eric Olson 5-16-10
REGISTERED CIVIL ENGINEER DATE

7-26-10
PLANS APPROVAL DATE

REGISTERED PROFESSIONAL ENGINEER ERIC H. OLSON No. 60801 Exp. 12/31/10 CIVIL STATE OF CALIFORNIA

THE STATE OF CALIFORNIA OR ITS OFFICERS OR AGENTS SHALL NOT BE RESPONSIBLE FOR THE ACCURACY OR COMPLETENESS OF ELECTRONIC COPIES OF THIS PLAN SHEET.

Caltrans Metric

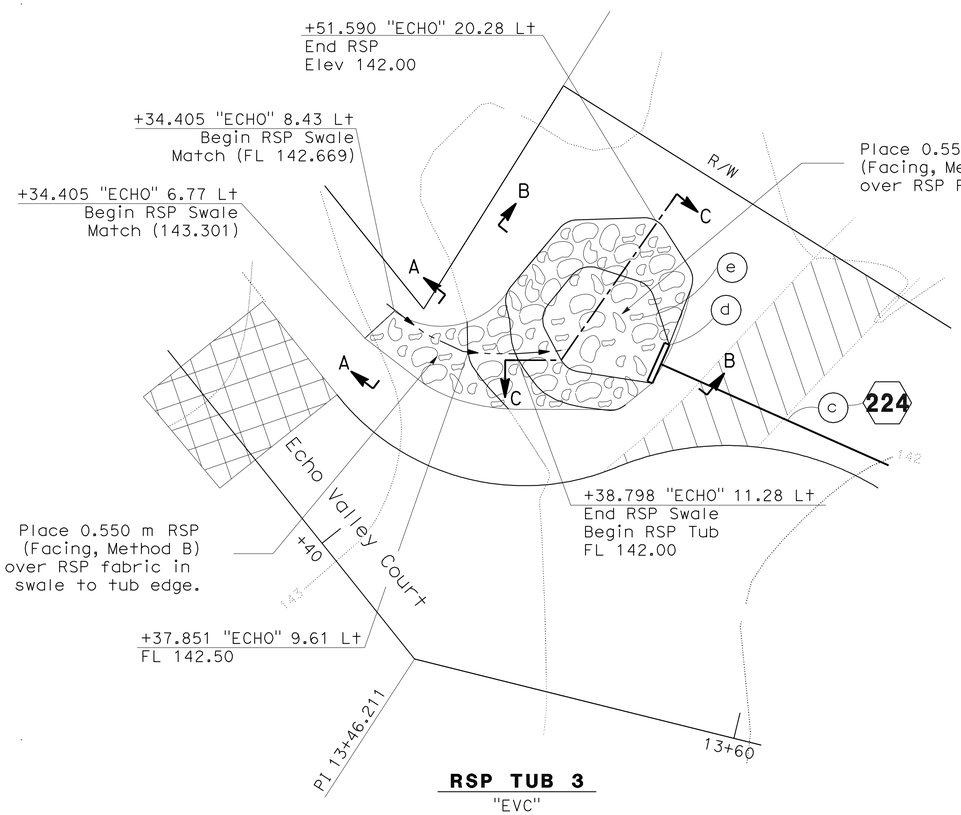

RSP TUB 3
"EVC"

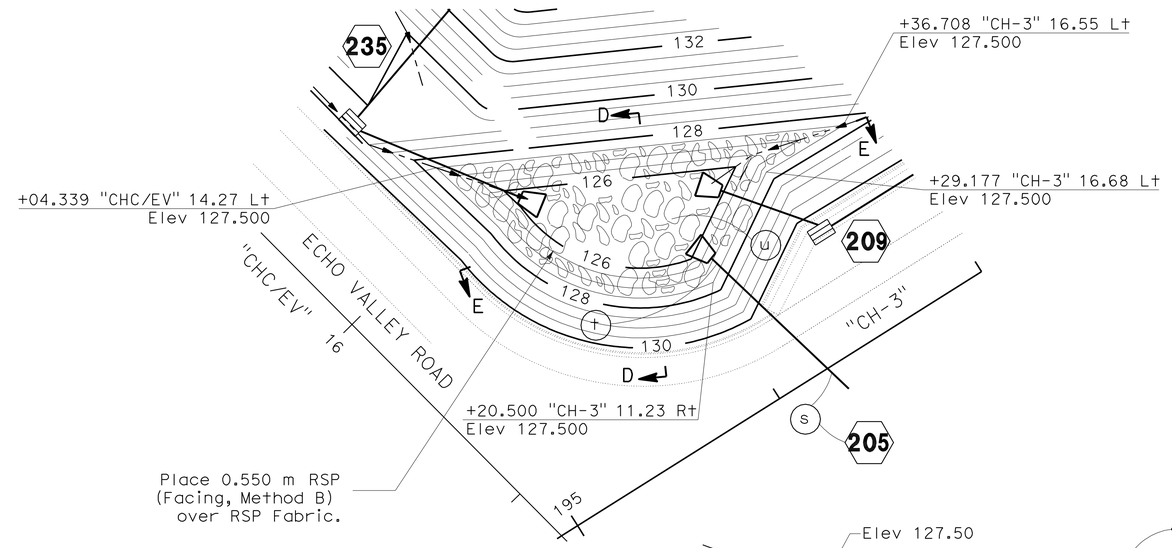

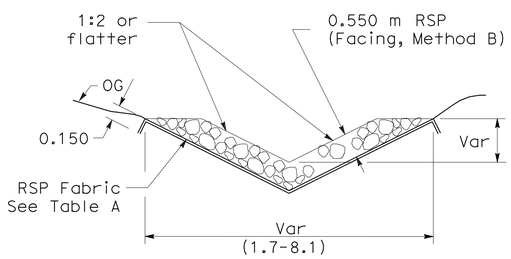

SECTION A-A

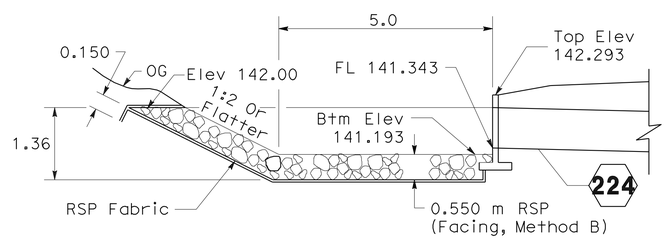

SECTION B-B

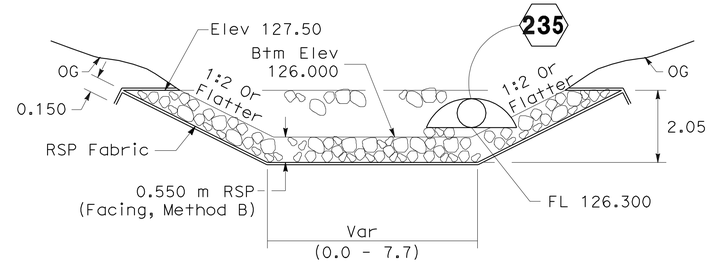

SECTION D-D

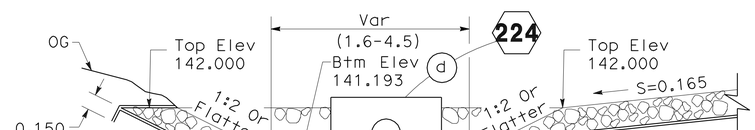

SECTION C-C

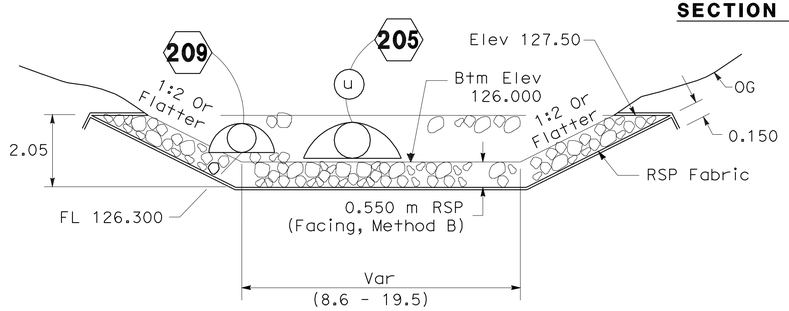

SECTION E-E

ALL DIMENSIONS ARE IN METERS
UNLESS OTHERWISE SHOWN.

DRAINAGE DETAILS

RSP TUB

NO SCALE

DD-43

STATE OF CALIFORNIA - DEPARTMENT OF TRANSPORTATION
Caltrans
06-DESIGN
FUNCTIONAL SUPERVISOR DAVID FRANKE
CALCULATED-DESIGNED BY CARLOS BLANCAS
CHECKED BY ERIC OLSON
REVISED BY D. MASSA
DATE REVISED 05/06/09

LAST REVISION 05-16-10
DATE PLOTTED => 02-AUG-2010
TIME PLOTTED => 14:35

Dist	COUNTY	ROUTE	KILOMETER POST TOTAL PROJECT	SHEET No.	TOTAL SHEETS
05	Mon	101	R146.8/159.7	598	1402

Caltrans Metric

DAN 5-16-10
REGISTERED CIVIL ENGINEER DATE

7-26-10
PLANS APPROVAL DATE

REGISTERED PROFESSIONAL ENGINEER DANIEL B. MASSA No. 59095 Exp. 6/30/11 CIVIL STATE OF CALIFORNIA

THE STATE OF CALIFORNIA OR ITS OFFICERS OR AGENTS SHALL NOT BE RESPONSIBLE FOR THE ACCURACY OR COMPLETENESS OF ELECTRONIC COPIES OF THIS PLAN SHEET.

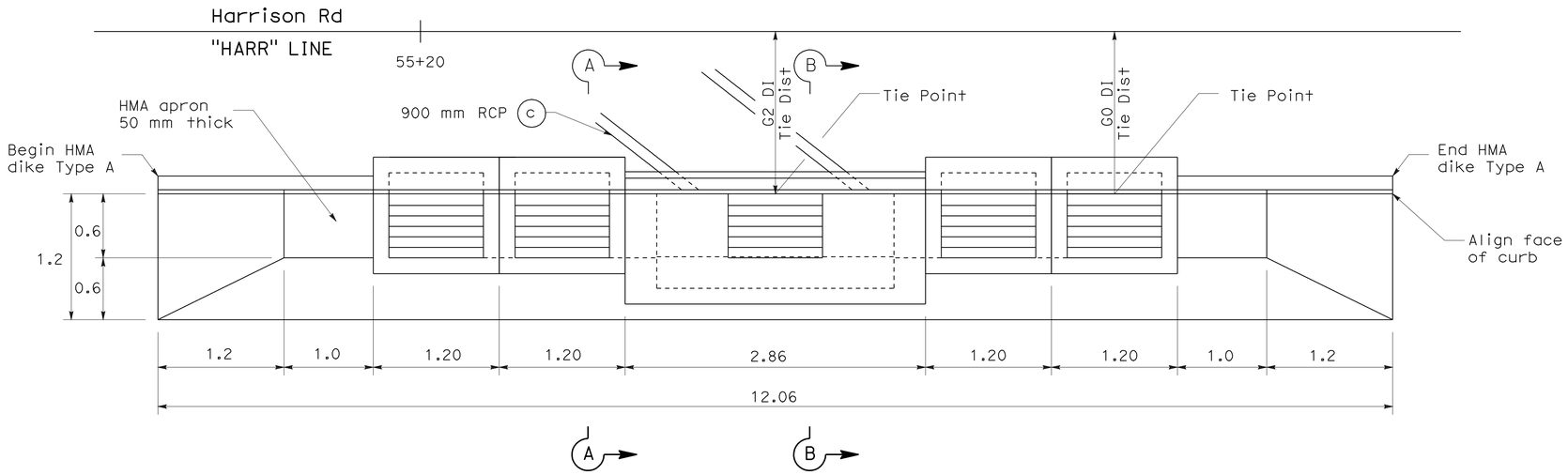

NOTES:

1. Curb face opening inlets (type GO and GDO) are tied to the gutter flow line at center curb face opening.
2. G2 inlet is tied to the back center of grate.
3. Depress grate for inlets in ditch 0.050 m.
4. Place pipe at center of inside wall of G2 DI.
5. Place Type A HMA dike along top of DI's. Match flowline.
6. See Standard Plans for additional details.

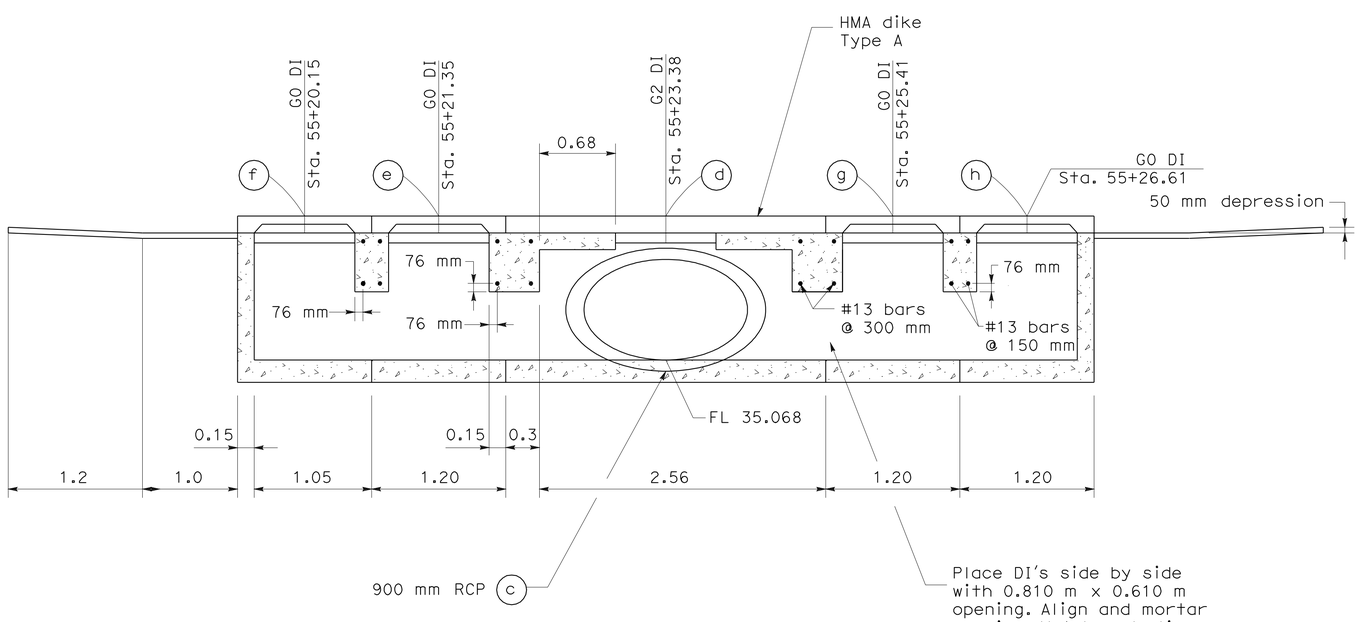

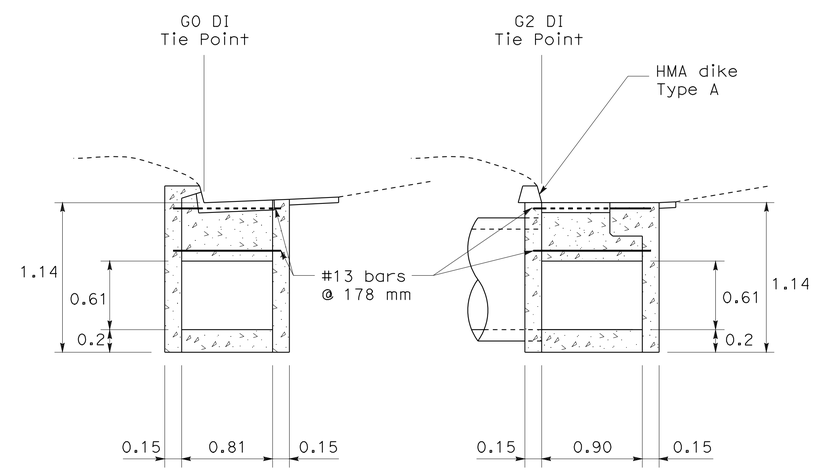

ALL DIMENSIONS ARE IN METERS UNLESS OTHERWISE SHOWN.

DRAINAGE SYSTEM 61

DRAINAGE DETAILS

NO SCALE

DD-44

STATE OF CALIFORNIA - DEPARTMENT OF TRANSPORTATION
Caltrans
06-DESIGN
FUNCTIONAL SUPERVISOR DAVID FRANKE
CALCULATED-DESIGNED BY CARLOS BLANCAS
CHECKED BY DAN MASSA
REVISED BY D. MASSA
DATE REVISED 05/06/09

LAST REVISION 05-16-10 | DATE PLOTTED => 02-AUG-2010 | TIME PLOTTED => 14:35

Dist	COUNTY	ROUTE	KILOMETER POST TOTAL PROJECT	SHEET No.	TOTAL SHEETS
05	Mon	101	R146.8/159.7	599	1402

Eric Olson 5-16-10
REGISTERED CIVIL ENGINEER DATE

7-26-10
PLANS APPROVAL DATE

REGISTERED PROFESSIONAL ENGINEER ERIC H. OLSON No. 60801 Exp. 12/31/10 CIVIL STATE OF CALIFORNIA

THE STATE OF CALIFORNIA OR ITS OFFICERS OR AGENTS SHALL NOT BE RESPONSIBLE FOR THE ACCURACY OR COMPLETENESS OF ELECTRONIC COPIES OF THIS PLAN SHEET.

Caltrans Metric

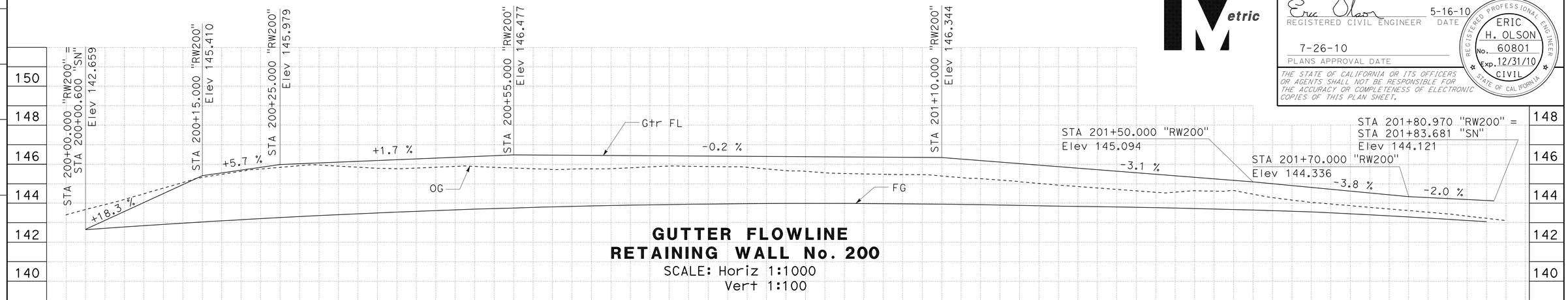

GUTTER FLOWLINE
RETAINING WALL No. 200

SCALE: Horiz 1:1000
Vert 1:100

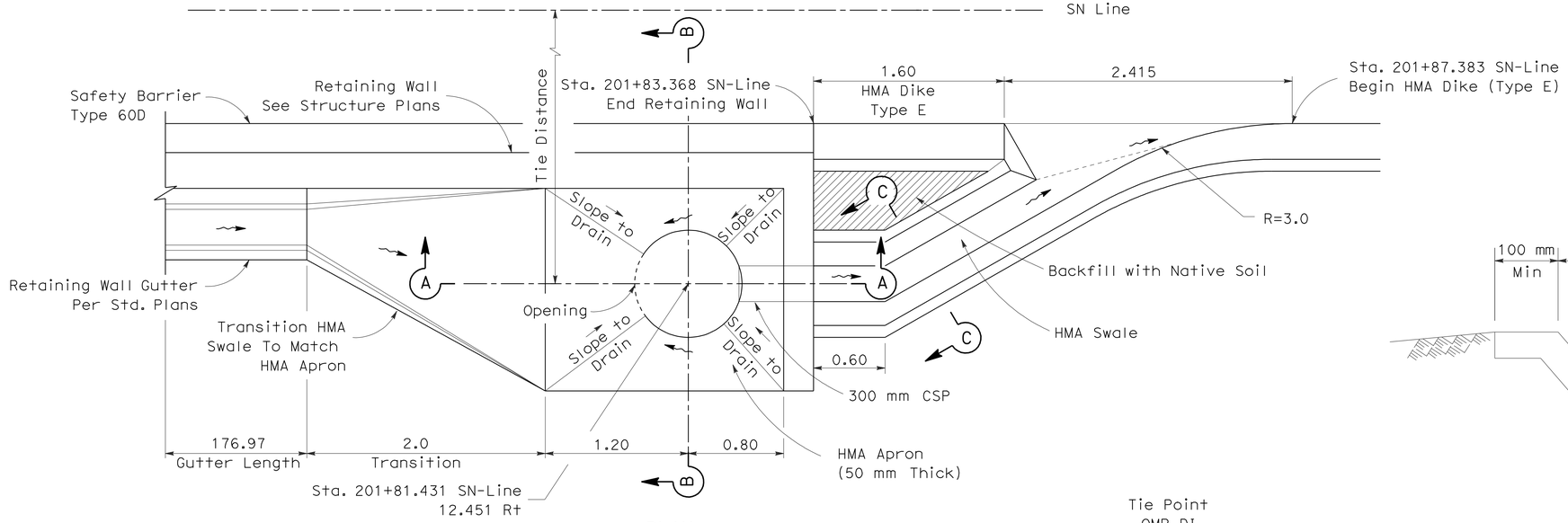

PLAN

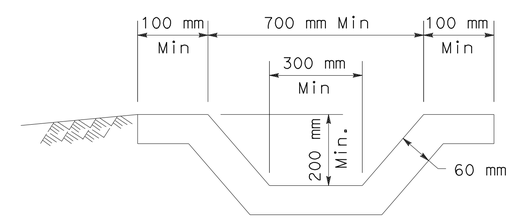

SECTION C-C

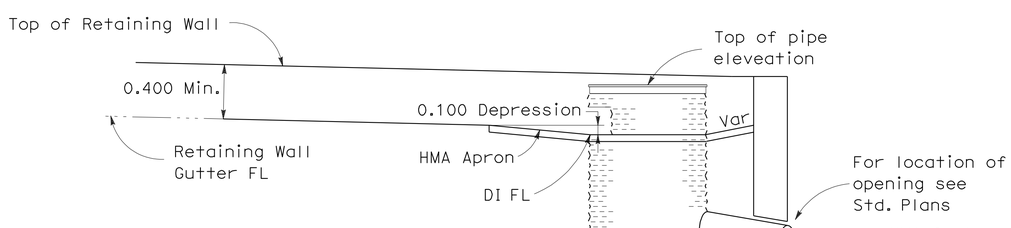

SECTION A-A

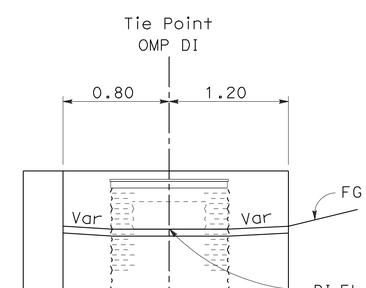

SECTION B-B

DRAINAGE SYSTEM 221

NO SCALE

ALL DIMENSIONS ARE IN METERS
UNLESS OTHERWISE SHOWN.

DRAINAGE DETAILS

DD-45

REVISED BY	DATE REVISED

CARLOS GONZALEZ — ERIC OLSON

CALCULATED-DESIGNED BY — CHECKED BY

FUNCTIONAL SUPERVISOR: DAVID FRANKE

STATE OF CALIFORNIA - DEPARTMENT OF TRANSPORTATION
Caltrans
06-DESIGN

LAST REVISION 05-16-10 | DATE PLOTTED => 02-AUG-2010 | TIME PLOTTED => 14:35

Dist	COUNTY	ROUTE	KILOMETER POST TOTAL PROJECT	SHEET No.	TOTAL SHEETS
05	Mon	101	R146.8/159.7	600	1402

REGISTERED CIVIL ENGINEER 5-16-10 DATE

7-26-10
PLANS APPROVAL DATE

REGISTERED PROFESSIONAL ENGINEER ROY J. SHAVER No. 44587 Exp. 3/31/12 CIVIL STATE OF CALIFORNIA

THE STATE OF CALIFORNIA OR ITS OFFICERS OR AGENTS SHALL NOT BE RESPONSIBLE FOR THE ACCURACY OR COMPLETENESS OF ELECTRONIC COPIES OF THIS PLAN SHEET.

Caltrans Metric

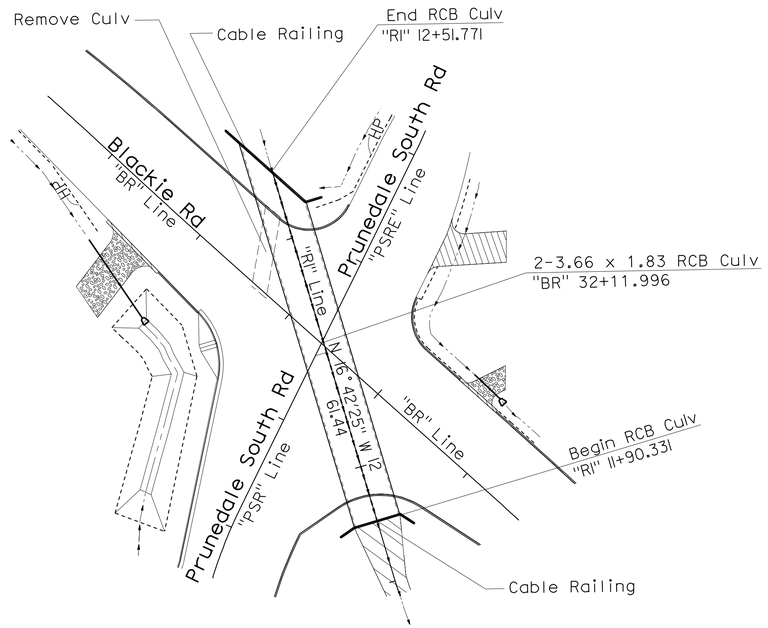

PLAN

DRAINAGE SYSTEM No. 164

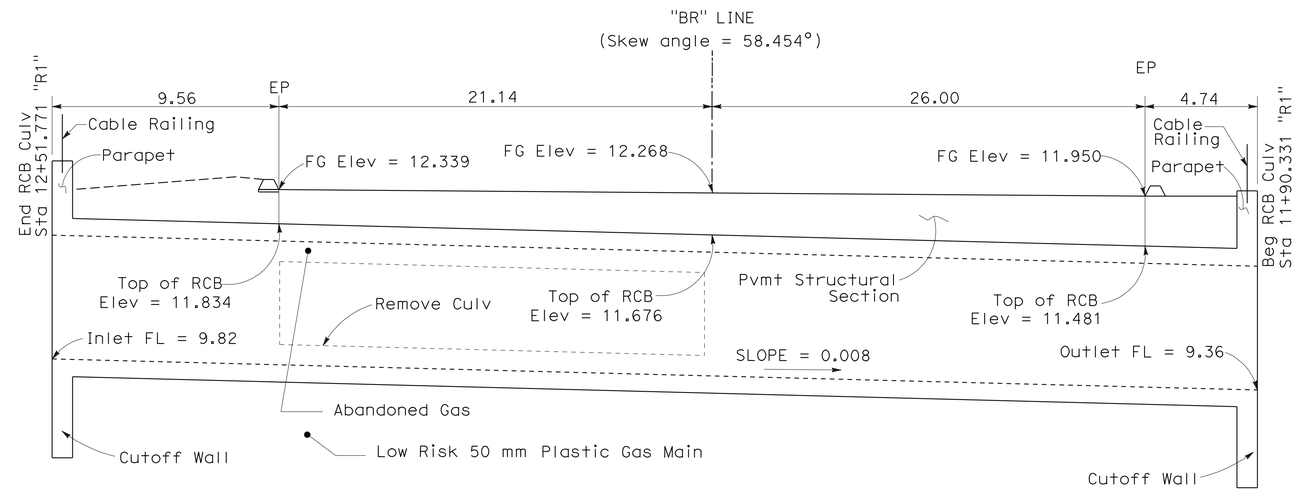

RCB CROSS SECTION
Sta 32+11.996 "BR" Line

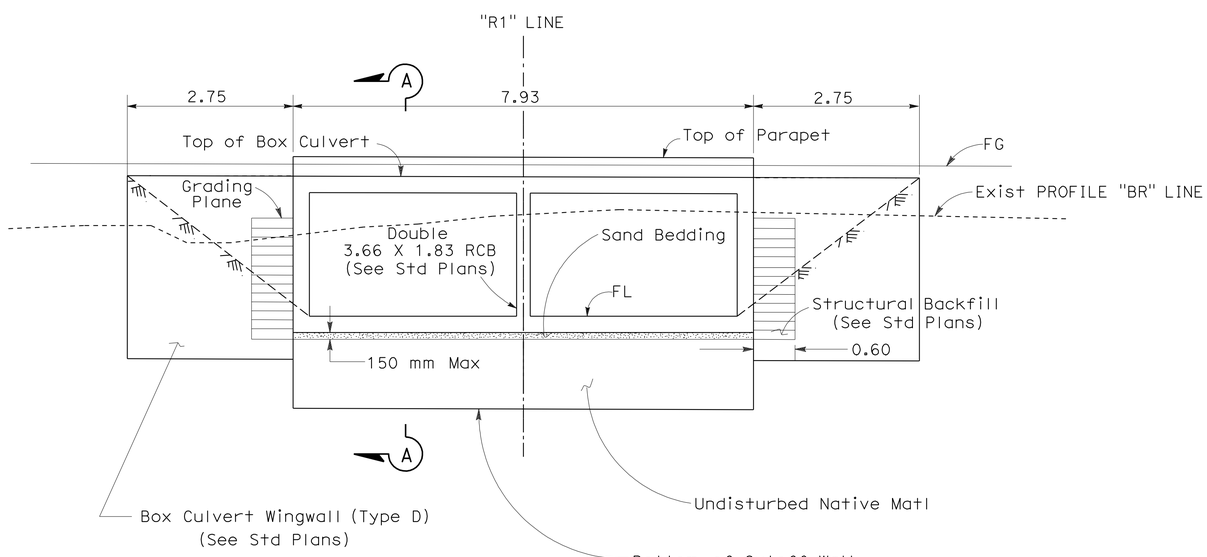

ELEVATION

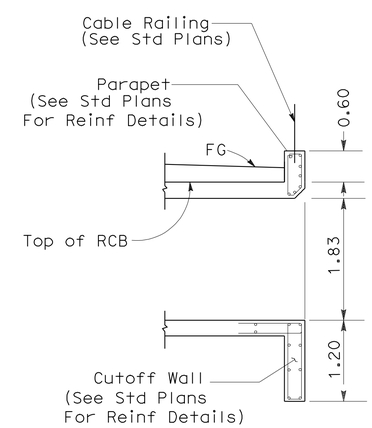

SECTION A-A

ALL DIMENSIONS ARE IN METERS
UNLESS OTHERWISE SHOWN.

DRAINAGE DETAILS

NO SCALE

DD-46

STATE OF CALIFORNIA - DEPARTMENT OF TRANSPORTATION
Caltrans
06-DESIGN

FUNCTIONAL SUPERVISOR DAVID FRANKE
CALCULATED-DESIGNED BY RITCHIE FERRER
CHECKED BY ROY J. SHAVER
REVISED BY
DATE REVISED

LAST REVISION 05-16-10 | DATE PLOTTED => 02-AUG-2010 | TIME PLOTTED => 14:35