Dist	COUNTY	ROUTE	POST MILES TOTAL PROJECT	SHEET No.	TOTAL SHEETS
04	Son	101	R52.1/R52.5	1	41

STATE OF CALIFORNIA

DEPARTMENT OF TRANSPORTATION

NH-Q101(212)E

PROJECT PLANS FOR CONSTRUCTION ON

STATE HIGHWAY

IN SONOMA COUNTY
IN CLOVERDALE
FROM FIRST STREET UNDERCROSSING TO
1.7 MILES SOUTH OF 101/128 SEPARATION

TO BE SUPPLEMENTED BY STANDARD PLANS DATED MAY 2006

INDEX OF PLANS

SHEET No.	DESCRIPTION
1	TITLE AND LOCATION MAP
2-3	TYPICAL CROSS SECTION
4	LAYOUTS
5	TEMPORARY WATER POLLUTION CONTROL QUANTITIES
6	EROSION CONTROL PLAN AND QUANTITIES
7	CONSTRUCTION AREA SIGNS
8	TRAFFIC HANDLING PLAN AND QUANTITIES
9	PAVEMENT DELINEATION PLAN
10	SUMMARY OF QUANTITIES
11-18	REVISED AND NEW STANDARD PLANS

STRUCTURE PLANS

19-24	SPIRAL CAGED REINFORCED CIDH PILES Br No. 20E0061
25-32	SEGMENTED CIDH SOLDIER PILE WALL Br No. 20E0062
33-41	TIEBACK WALL Br No. 20E0063

THE STANDARD PLANS LIST APPLICABLE TO THIS CONTRACT IS INCLUDED IN THE NOTICE TO BIDDERS AND SPECIAL PROVISIONS BOOK.

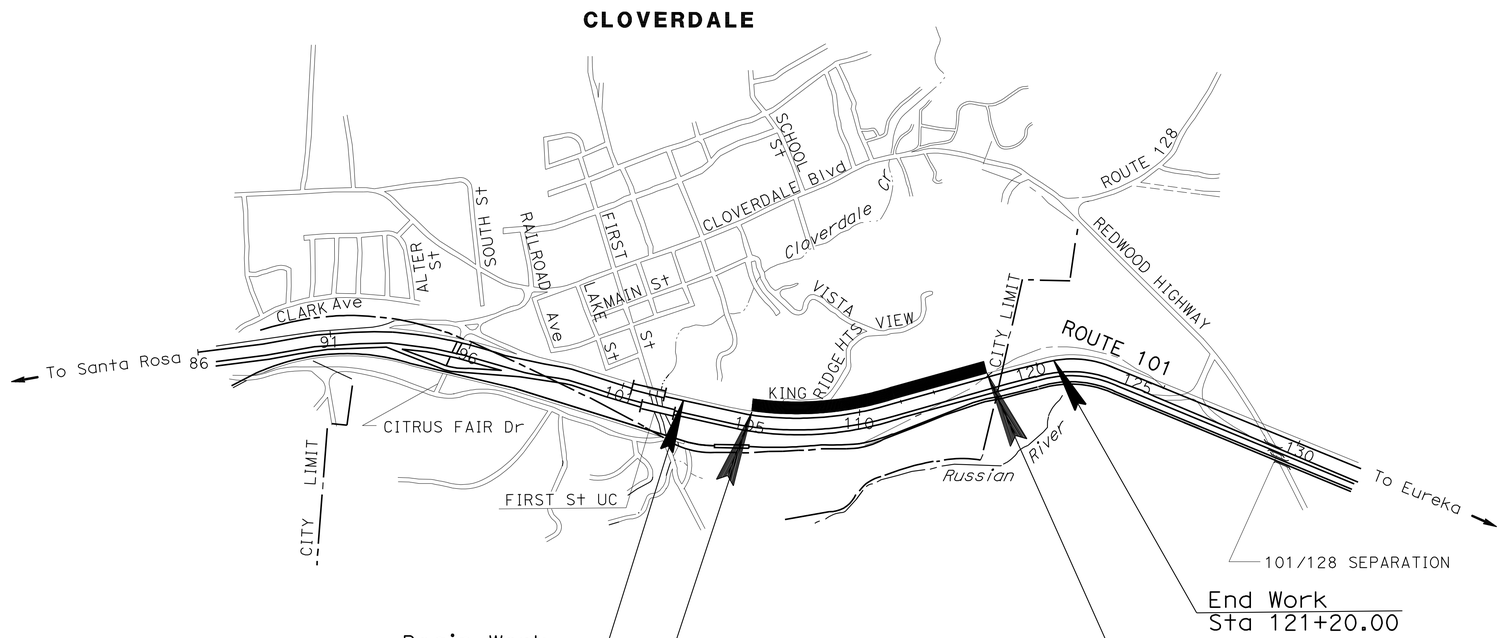

NO SCALE

PROJECT MANAGER: JAY HAGHPARAST

DESIGN ENGINEER: ALI ALQATAMI

PROJECT ENGINEER / REGISTERED CIVIL ENGINEER — DATE: 2-17-11

LEE C TSENG No. 47927 Exp. 12-31-11 CIVIL — REGISTERED PROFESSIONAL ENGINEER — STATE OF CALIFORNIA

June 6, 2011

PLANS APPROVAL DATE

THE STATE OF CALIFORNIA OR ITS OFFICERS OR AGENTS SHALL NOT BE RESPONSIBLE FOR THE ACCURACY OR COMPLETENESS OF SCANNED COPIES OF THIS PLAN SHEET.

THE CONTRACTOR SHALL POSSESS THE CLASS (OR CLASSES) OF LICENSE AS SPECIFIED IN THE "NOTICE TO BIDDERS."

CONTRACT No.	04-4S6504
PROJECT ID	0400001255

LAST REVISION 03-16-11 — DATE PLOTTED => 17-AUG-2011 — TIME PLOTTED => 06:13

Dist	COUNTY	ROUTE	POST MILES TOTAL PROJECT	SHEET No.	TOTAL SHEETS
04	Son	101	R52.1/R52.5	2	41

REGISTERED CIVIL ENGINEER 2-17-11 DATE

6-6-11
PLANS APPROVAL DATE

REGISTERED PROFESSIONAL ENGINEER
LEE CHENG TSENG
No. 47927
Exp. 12-31-11
CIVIL
STATE OF CALIFORNIA

THE STATE OF CALIFORNIA OR ITS OFFICERS OR AGENTS SHALL NOT BE RESPONSIBLE FOR THE ACCURACY OR COMPLETENESS OF SCANNED COPIES OF THIS PLAN SHEET.

NOTES:

1. FOR TEMPORARY RAILING (TYPE K) DETAILS, SEE TH-1 PLAN.
2. FOR TIEBACK WALL, SEE STRUCTURE PLANS.

DESIGN DESIGNATION
SOUTHBOND

AADT (2011) 7482
AADT (2022) 8521
AADT (2032) 9466
DHV (2032) 571(AM) 677(PM)
T 11.33%

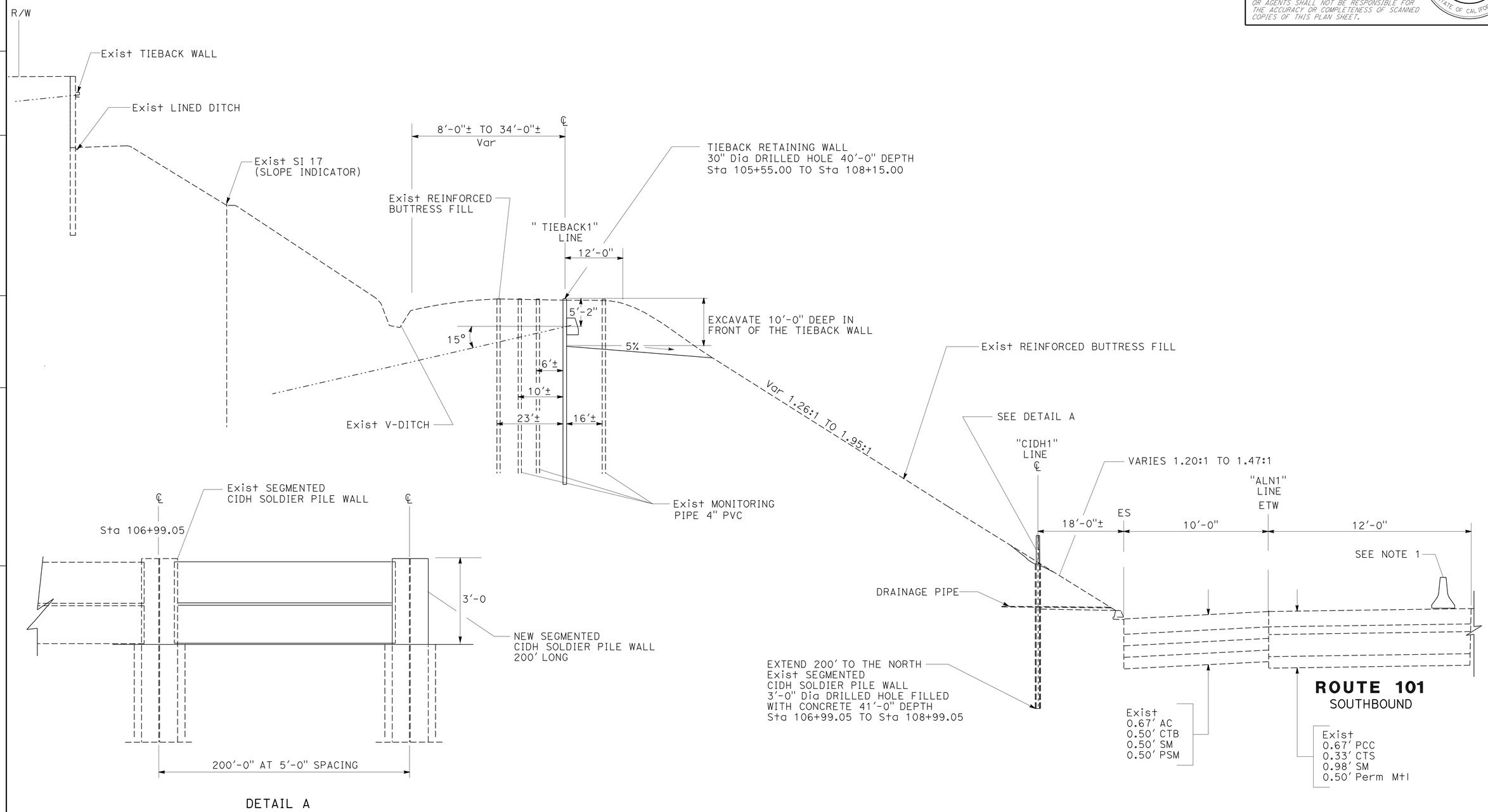

DETAIL A

TYPICAL CROSS SECTION

NO SCALE

X-1

STATE OF CALIFORNIA - DEPARTMENT OF TRANSPORTATION
Caltrans®
06-DESIGN

FUNCTIONAL SUPERVISOR: ALI ALQATAMI
CALCULATED-DESIGNED BY: GEO F. LEYVA
CHECKED BY: LEE TSENG
REVISED BY
DATE REVISED

LAST REVISION 03-16-11
DATE PLOTTED => 20-JUN-2011
TIME PLOTTED => 12:51

Dist	COUNTY	ROUTE	POST MILES TOTAL PROJECT	SHEET No.	TOTAL SHEETS
04	Son	101	R52.1/R52.5	3	41

REGISTERED CIVIL ENGINEER 03-16-11 DATE

6-6-11
PLANS APPROVAL DATE

REGISTERED PROFESSIONAL ENGINEER LEE CHENG TSENG No. 47927 Exp. 12-31-11 CIVIL STATE OF CALIFORNIA

THE STATE OF CALIFORNIA OR ITS OFFICERS OR AGENTS SHALL NOT BE RESPONSIBLE FOR THE ACCURACY OR COMPLETENESS OF SCANNED COPIES OF THIS PLAN SHEET.

DESIGN DESIGNATION
SOUTHBOND

AADT (2011) 7482
AADT (2022) 8521
AADT (2032) 9466
DHV (2032) 571(AM) 677(PM)
T 11.33%

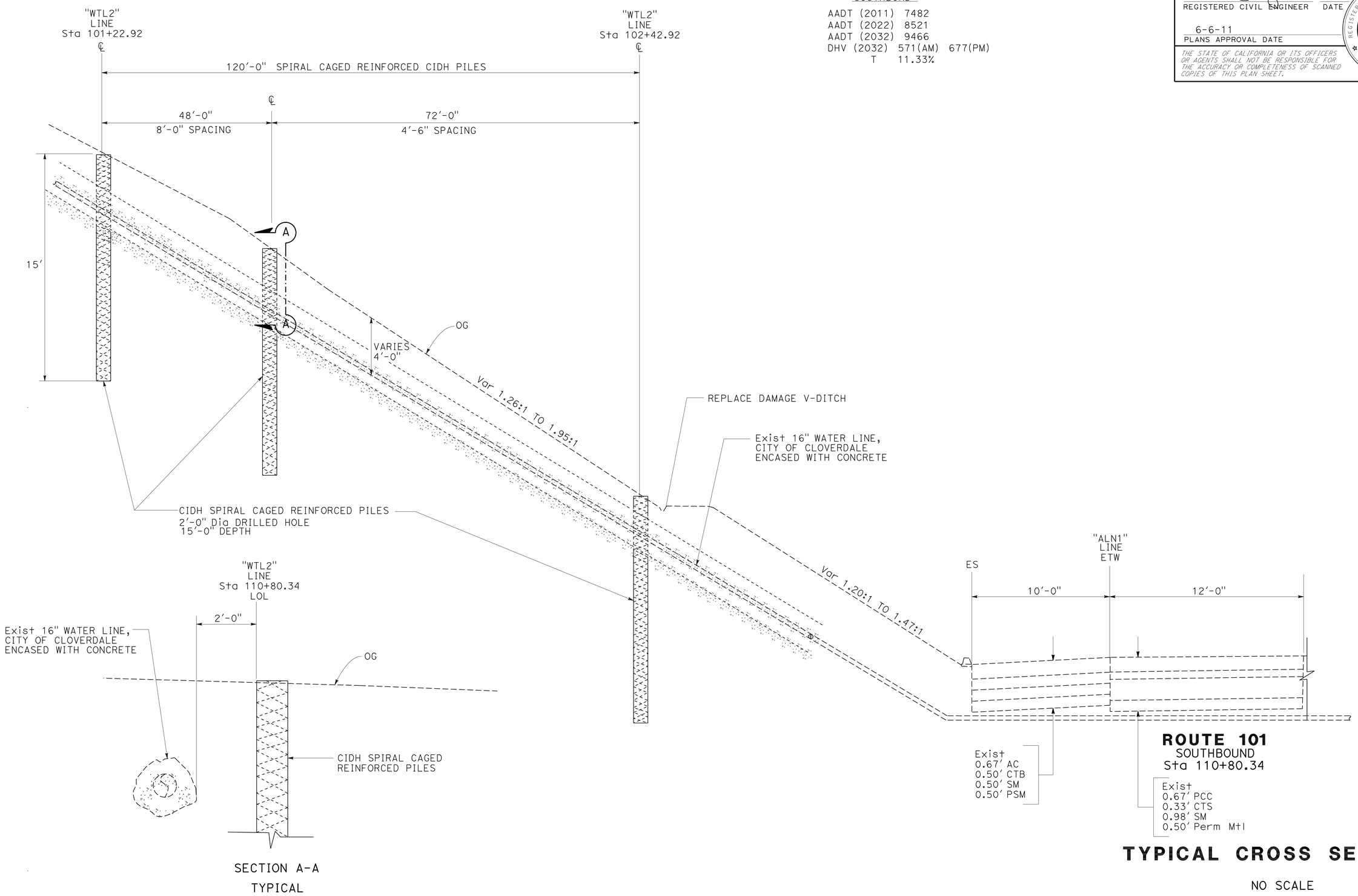

SECTION A-A
TYPICAL

ROUTE 101
SOUTHBOUND
Sta 110+80.34

TYPICAL CROSS SECTION

NO SCALE

X-2

STATE OF CALIFORNIA - DEPARTMENT OF TRANSPORTATION
Caltrans®
06-DESIGN

FUNCTIONAL SUPERVISOR: ALI ALQATAMI
CALCULATED-DESIGNED BY: GEO F. LEYVA
CHECKED BY: LEE TSENG
REVISED BY
DATE REVISED

LAST REVISION 03-16-11
DATE PLOTTED => 08-JUN-2011
TIME PLOTTED => 07:33

Dist	COUNTY	ROUTE	POST MILES TOTAL PROJECT	SHEET No.	TOTAL SHEETS
04	Son	101	R52.1/R52.5	4	41

REGISTERED CIVIL ENGINEER 03-18-11 DATE

6-6-11
PLANS APPROVAL DATE

REGISTERED PROFESSIONAL ENGINEER LEE CHENG TSENG No. 47927 Exp. 12-31-11 CIVIL STATE OF CALIFORNIA

THE STATE OF CALIFORNIA OR ITS OFFICERS OR AGENTS SHALL NOT BE RESPONSIBLE FOR THE ACCURACY OR COMPLETENESS OF SCANNED COPIES OF THIS PLAN SHEET.

NOTE:

1. FOR ACCURATE RIGHT OF WAY AND ACCESS DATA, CONTACT RIGHT OF WAY ENGINEERING AT THE DISTRICT OFFICE.

CURVE DATA

No.	R	Δ	T	L
1	4006′	27°30′47″	980.81′	1923.78′

POTHOLE LOCATIONS

No.	MATERIAL	UTILITY	DEPTH (FT)	COMMENTS
1	CONCRETE	16" WATER	1.9	BOTTOM SLOPE 7.17 FT EAST FROM WATER BOX
2	CONCRETE	16" WATER	3.3	TOP OF HILL 19.5 FT EAST FROM EDGE WATER BOX
3	CONCRETE	16" WATER	1.3	MIDDLE 71 FT EAST FROM EDGE WATER BOX

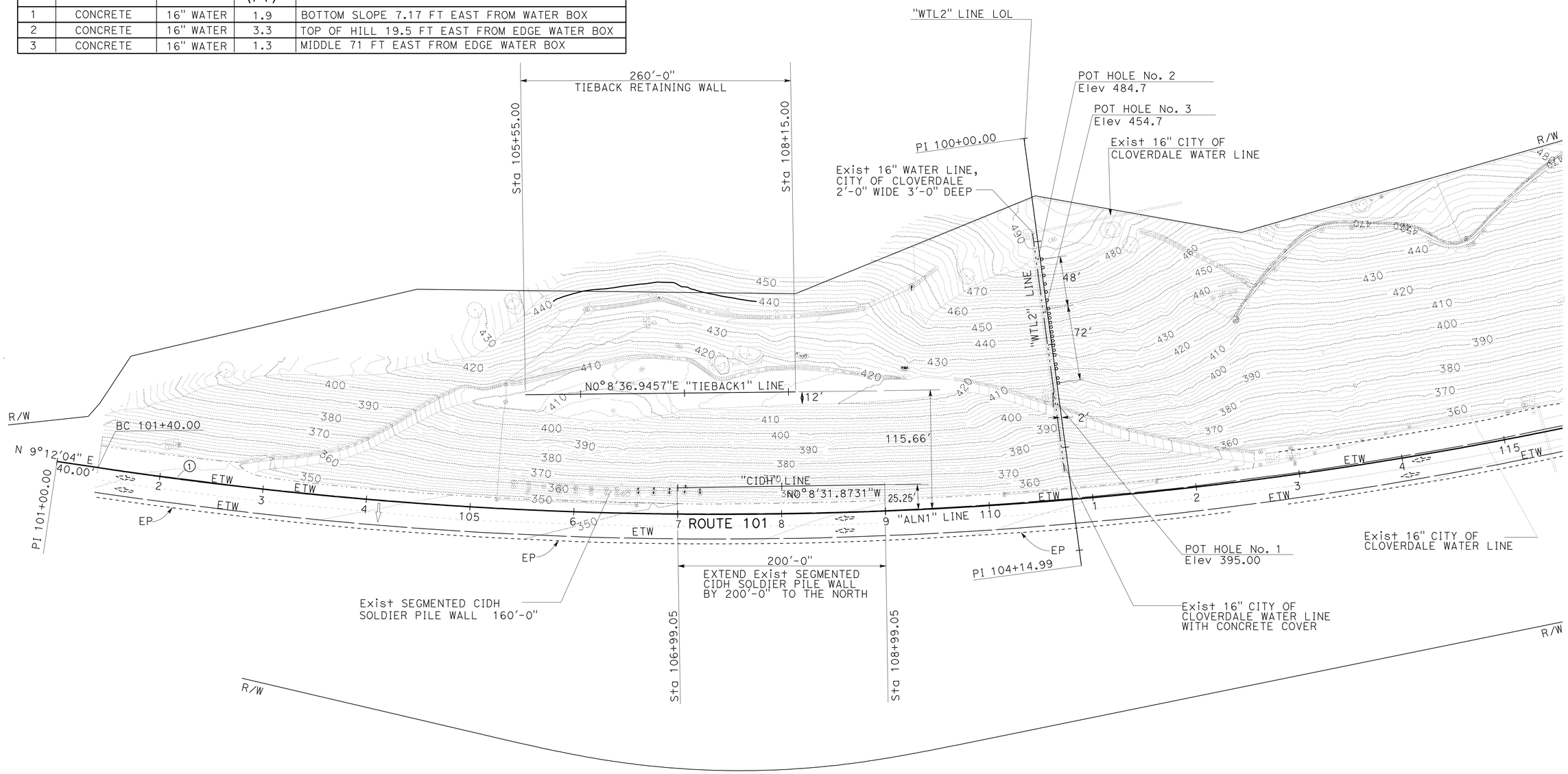

LAYOUT

SCALE: 1" = 50′

L-1

STATE OF CALIFORNIA - DEPARTMENT OF TRANSPORTATION
Caltrans®
06-DESIGN

FUNCTIONAL SUPERVISOR: ALI ALQATAMI
CALCULATED-DESIGNED BY: GEO LEYVA
CHECKED BY: LEE TSENG
REVISED BY
DATE REVISED

LAST REVISION 03-18-11
DATE PLOTTED => 19-JUL-2011
TIME PLOTTED => 10:13

Dist	COUNTY	ROUTE	POST MILES TOTAL PROJECT	SHEET No.	TOTAL SHEETS
04	Son	101	R52.1/R52.5	5	41

REGISTERED CIVIL ENGINEER 2-17-11 DATE

6-6-11
PLANS APPROVAL DATE

REGISTERED PROFESSIONAL ENGINEER
LEE CHENG TSENG
No. 47927
Exp. 12-31-11
CIVIL
STATE OF CALIFORNIA

THE STATE OF CALIFORNIA OR ITS OFFICERS OR AGENTS SHALL NOT BE RESPONSIBLE FOR THE ACCURACY OR COMPLETENESS OF SCANNED COPIES OF THIS PLAN SHEET.

TEMPORARY WATER POLLUTION CONTROL

LOCATION	DESCRIPTION	UNIT	QUANTITIES
Sta 106+50.00 TO Sta 109+50 AT THE TOE OF SLOPE	TEMPORARY SILT FENCE	LF	300
	TEMPORARY CONSTRUCTION ENTRANCE	EA	1
(SEE TEMPORARY DRAINAGE INLET PROTECTION LOCATIONS TABLE)	TEMPORARY DRAINAGE INLET PROTECTION	EA	11

TEMPORARY DRAINAGE INLET PROTECTION LOCATIONS

STATION	OFFSET TO LEFT (FT)	EA
Sta 105+25.00	8	1
Sta 105+34.00	103	1
Sta 105+34.00	105	1
Sta 106+61.00	8	1
Sta 110+16.00	10	1
Sta 111+64.00	10	1
Sta 112+67.00	25	1
Sta 112+97.00	10	1
Sta 112+97.00	26	1
Sta 115+10.00	25	1
Sta 117+5.00	20	1

TEMPORARY WATER POLLUTION CONTROL QUANTITIES
WPCQ-1

REVISED BY | DATE REVISED
GEO F. LEYVA | LEE TSENG
CALCULATED-DESIGNED BY | CHECKED BY
FUNCTIONAL SUPERVISOR
ALI ALQATAMI

STATE OF CALIFORNIA - DEPARTMENT OF TRANSPORTATION
Caltrans
06-DESIGN

LAST REVISION 03-16-11 | DATE PLOTTED => 20-JUN-2011 | TIME PLOTTED => 12:51

Dist	COUNTY	ROUTE	POST MILES TOTAL PROJECT	SHEET No.	TOTAL SHEETS
04	Son	101	R52.1/R52.5	6	41

LICENSED LANDSCAPE ARCHITECT

6-6-11
PLANS APPROVAL DATE

LICENSED LANDSCAPE ARCHITECT — DAVID WARREN YAM No. 3023 — Signature 11-30-11 Renewal Date 03-18-11 Date — STATE OF CALIFORNIA

THE STATE OF CALIFORNIA OR ITS OFFICERS OR AGENTS SHALL NOT BE RESPONSIBLE FOR THE ACCURACY OR COMPLETENESS OF SCANNED COPIES OF THIS PLAN SHEET.

NOTES:

1. FOR ACCURATE RIGHT OF WAY AND ACCESS DATA, CONTACT RIGHT OF WAY ENGINEERING AT THE DISTRICT OFFICE.
2. EXACT LIMITS OF WORK OR DEPLOYMENT OF EROSION CONTROL MATERIALS SHALL BE DETERMINED BY THE ENGINEER.

LEGEND:

EROSION CONTROL (TYPE 1)

- ROLLED EROSION CONTROL PRODUCT (NETTING) TYPE A
- EROSION CONTROL (HYDROSEED)

EROSION CONTROL QUANTITIES

SHEET No.	ROLLED EROSION CONTROL PRODUCT (NETTING) TYPE A	EROSION CONTROL (HYDROSEED)
	SQFT	SQFT
EC-1	15,720	30,070
TOTAL	15,720	30,070

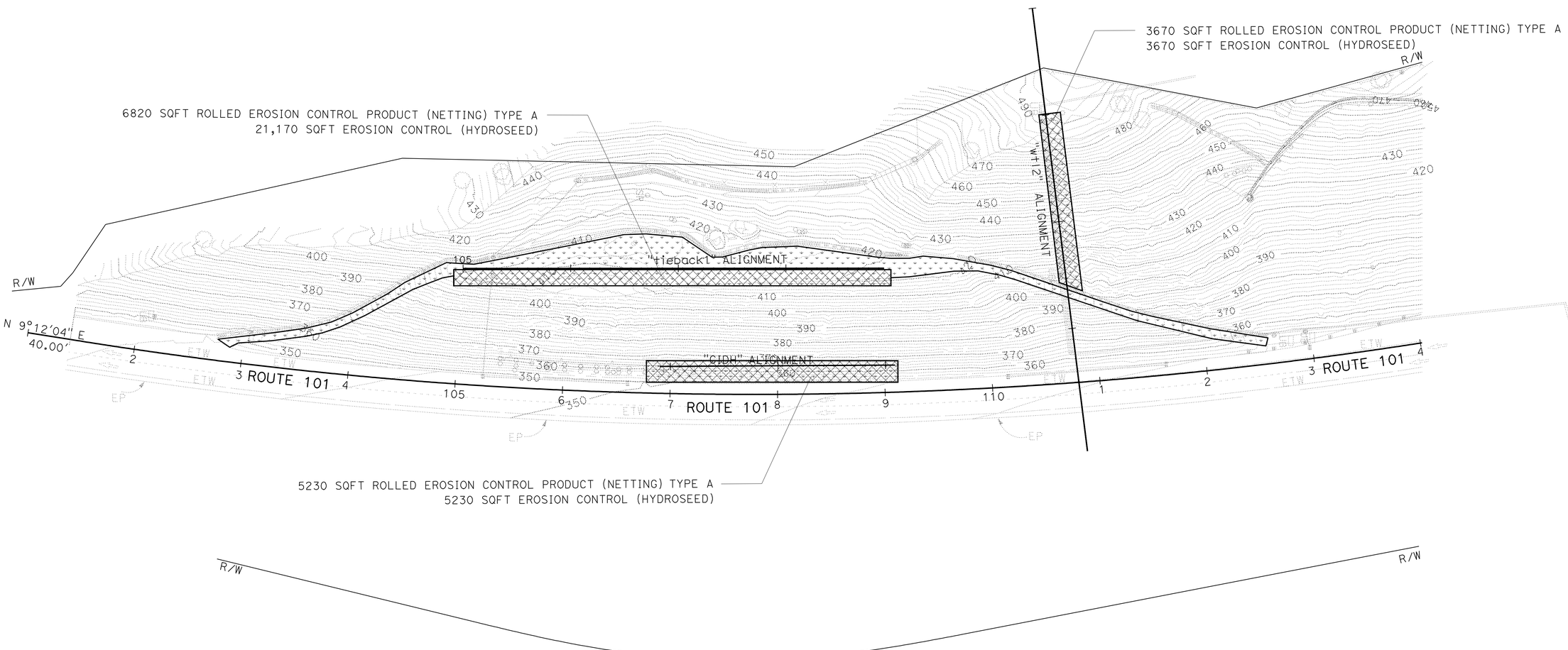

THIS PLAN ACCURATE FOR EROSION CONTROL WORK ONLY

EROSION CONTROL PLAN AND QUANTITIES

SCALE: 1" = 50'

EC-1

STATE OF CALIFORNIA - DEPARTMENT OF TRANSPORTATION
Caltrans®
WATER QUALITY

SENIOR LANDSCAPE ARCHITECT: DAVID YAM
CALCULATED-DESIGNED BY: ANGELA KWAN
CHECKED BY: DAVID YAM
REVISED BY
DATE REVISED

LAST REVISION 03-18-11
DATE PLOTTED => 19-JUL-2011
TIME PLOTTED => 0:14

Dist	COUNTY	ROUTE	POST MILES TOTAL PROJECT	SHEET No.	TOTAL SHEETS
04	Son	101	R52.1/R52.5	7	41

REGISTERED CIVIL ENGINEER 03-16-11 DATE

6-6-11
PLANS APPROVAL DATE

REGISTERED PROFESSIONAL ENGINEER MAZIN H. AL-ALI No. 65523 Exp. 9/30/11 CIVIL STATE OF CALIFORNIA

THE STATE OF CALIFORNIA OR ITS OFFICERS OR AGENTS SHALL NOT BE RESPONSIBLE FOR THE ACCURACY OR COMPLETENESS OF SCANNED COPIES OF THIS PLAN SHEET.

NOTE:

1. EXACT SIGN LOCATIONS TO BE DETERMINED BY THE ENGINEER.

STATIONARY MOUNTED CONSTRUCTION AREA SIGNS

SIGN No.	SIGN CODE	PANEL SIZE	SIGN MESSAGE	No. OF POST AND SIZE	EACH
A	W20-1	48" x 48"	ROAD WORK AHEAD	1-6" x 6"	1
B	G20-2	36" x 18"	END ROAD WORK	1-4" x 6"	1
C	C40(CA)	102" x 42"	TRAFFIC FINES DOUBLED IN WORK ZONES	2-6" x 6"	1

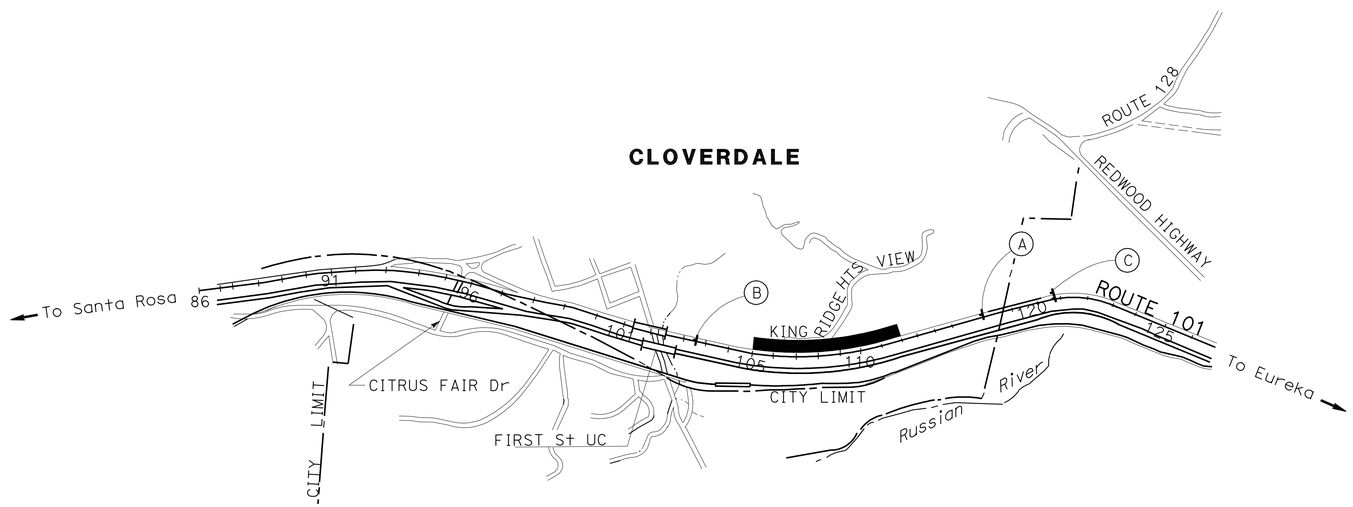

THIS PLAN ACCURATE FOR CONSTRUCTION AREA SIGN ONLY

CONSTRUCTION AREA SIGNS

CS-1

NO SCALE

STATE OF CALIFORNIA - DEPARTMENT OF TRANSPORTATION
Caltrans 06-TRAFFIC DESIGN

FUNCTIONAL SUPERVISOR: MOHAMMED QATAMI

CALCULATED-DESIGNED BY: MAZIN AL-ALI
CHECKED BY: HASEEB YOUSAF

REVISED BY | DATE REVISED

LAST REVISION 03-16-11 | DATE PLOTTED => 08-JUN-2011 | TIME PLOTTED => 08:20

Dist	COUNTY	ROUTE	POST MILES TOTAL PROJECT	SHEET No.	TOTAL SHEETS
04	Son	101	R52.1/R52.5	8	41

REGISTERED CIVIL ENGINEER 03-16-11 DATE

6-6-11
PLANS APPROVAL DATE

REGISTERED PROFESSIONAL ENGINEER MAZIN H. AL-ALI No. 65523 Exp. 9/30/11 CIVIL STATE OF CALIFORNIA

THE STATE OF CALIFORNIA OR ITS OFFICERS OR AGENTS SHALL NOT BE RESPONSIBLE FOR THE ACCURACY OR COMPLETENESS OF SCANNED COPIES OF THIS PLAN SHEET.

LEGEND

- ROADSIDE SIGN ONE-POST
- DIRECTION OF TRAFFIC
- Temp RAILING (TYPE K)
- CHANNELIZER (SURFACED MOUNTED)
- CONSTRUCTION AREA
- (xx) TEMPORARY TRAFFIC STRIPE (TAPE) DETAIL NUMBER

STATIONARY MOUNTED CONSTRUCTION AREA SIGNS

SIGN No.	SIGN CODE	PANEL SIZE	No. OF POST AND SIZE	EACH
1	W4-2(Rt)	36" X 36"	1-4" X 6"	2
2	W20-5	36" X 36"	1-4" X 6"	2

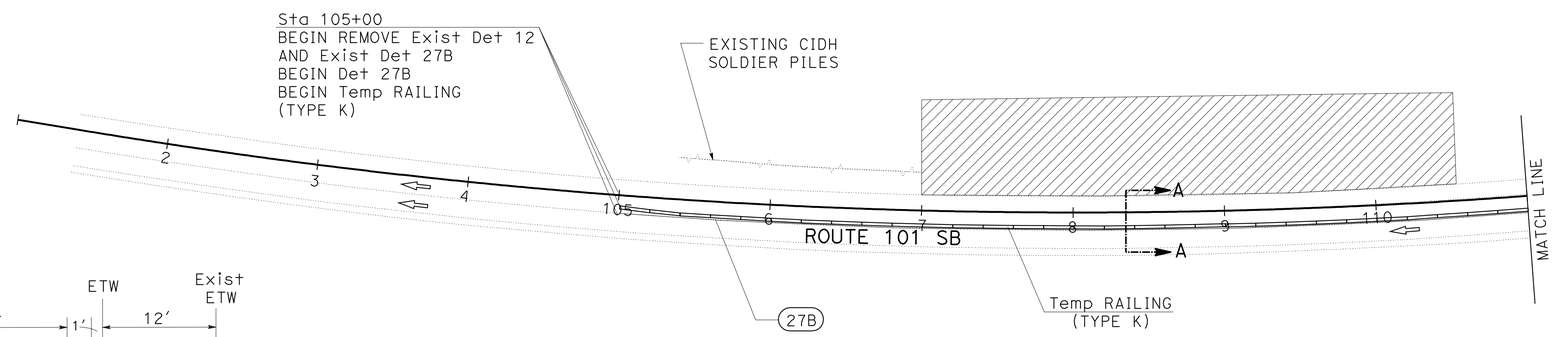

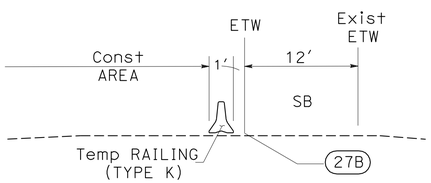

SECTION A-A
NO SCALE

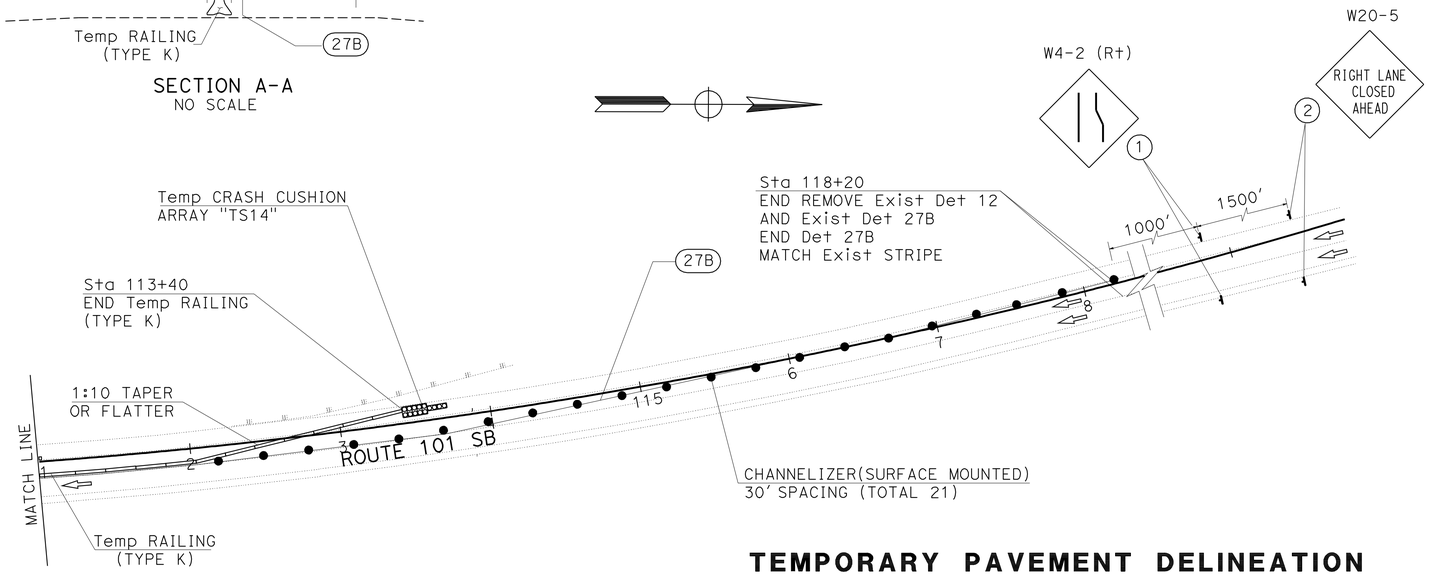

TEMPORARY PAVEMENT DELINEATION

LOCATION	DETAIL No.	REMOVE PAVEMENT MARKERS	TEMPORARY TRAFFIC STRIPE (TAPE)	REMOVE THERMOPLASTIC TRAFFIC STRIPE
		EA	LF	LF
STA 105+00 TO STA 118+20	12	29		330
STA 105+00 TO STA 118+20	27B		1320	1320
TOTAL		29	1320	1650

TEMPORARY RAILING (TYPE K)

SHEET No.	LOCATION	LF
TH-1	STA 105+00 TO STA 113+40	840
TOTAL		840

TEMPORARY CRASH CUSHION MODULE

SHEET No.	EA
TH-1	14
TOTAL	14

CHANNELIZER (SURFACE MOUNTED)

SHEET No.	EA
TH-1	21
TOTAL	21

THIS PLAN ACCURATE FOR TRAFFIC HANDLING ONLY

TRAFFIC HANDLING PLAN AND QUANTITIES

SCALE: 1" = 50'

TH-1

REVISED BY | DATE REVISED
MAZIN AL-ALI | HASEEB YOUSAF
CALCULATED-DESIGNED BY | CHECKED BY
FUNCTIONAL SUPERVISOR: MOHAMMED QATAMI
STATE OF CALIFORNIA - DEPARTMENT OF TRANSPORTATION
Caltrans 06-TRAFFIC DESIGN

LAST REVISION 03-16-11 | DATE PLOTTED => 20-JUN-2011 | TIME PLOTTED => 12:51

Dist	COUNTY	ROUTE	POST MILES TOTAL PROJECT	SHEET No.	TOTAL SHEETS
04	Son	101	R52.1/R52.5	9	41

REGISTERED CIVIL ENGINEER 03-16-11 DATE

6-6-11
PLANS APPROVAL DATE

REGISTERED PROFESSIONAL ENGINEER MAZIN H. AL-ALI No. 65523 Exp. 9/30/11 CIVIL STATE OF CALIFORNIA

THE STATE OF CALIFORNIA OR ITS OFFICERS OR AGENTS SHALL NOT BE RESPONSIBLE FOR THE ACCURACY OR COMPLETENESS OF SCANNED COPIES OF THIS PLAN SHEET.

NOTE:

1. FOR PAVEMENT DELINEATION QUANTITIES, SEE SUMMARY OF QUANTITIES.

LEGEND

⇨ DIRECTION OF TRAFFIC

(XX) TRAFFIC STRIPE (THERMOPLASTIC) DETAIL NUMBER

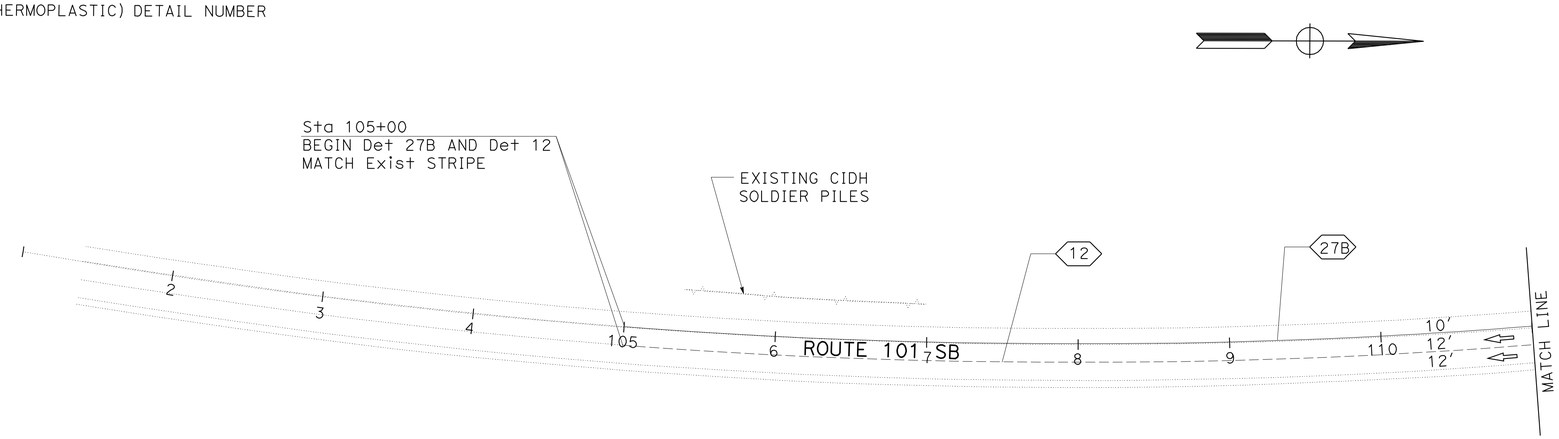

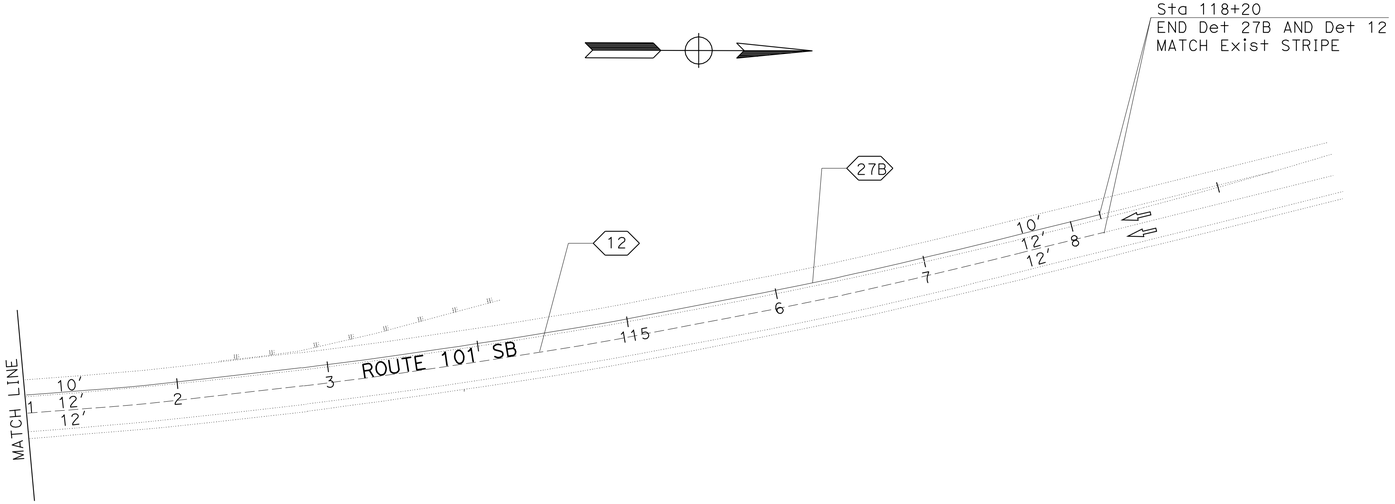

THIS PLAN ACCURATE FOR PAVEMENT DELINEATION ONLY

PAVEMENT DELINEATION PLAN

SCALE: 1" = 50'

PD-1

STATE OF CALIFORNIA - DEPARTMENT OF TRANSPORTATION
Caltrans® 06-TRAFFIC DESIGN

FUNCTIONAL SUPERVISOR: MOHAMMED QATAMI
CALCULATED-DESIGNED BY: MAZIN AL-ALI
CHECKED BY: HASEEB YOUSAF
REVISED BY
DATE REVISED

LAST REVISION 03-16-11
DATE PLOTTED => 20-JUN-2011
TIME PLOTTED => 12:55

Dist	COUNTY	ROUTE	POST MILES TOTAL PROJECT	SHEET No.	TOTAL SHEETS
04	Son	101	R52.1/R52.5	10	41

REGISTERED CIVIL ENGINEER 2-17-11 DATE

6-6-11
PLANS APPROVAL DATE

REGISTERED PROFESSIONAL ENGINEER
LEE CHENG TSENG
No. 47927
Exp.12-31-11
CIVIL
STATE OF CALIFORNIA

THE STATE OF CALIFORNIA OR ITS OFFICERS OR AGENTS SHALL NOT BE RESPONSIBLE FOR THE ACCURACY OR COMPLETENESS OF SCANNED COPIES OF THIS PLAN SHEET.

ROADWAY EXCAVATION

DESCRIPTION	QUANTITY
	CY
STA 105+00 TO 118+20	3291
TOTAL	3291

PAVEMENT DELINEATION

LOCATION	DETAIL No.	PAVEMENT MARKER RETRO-REFLECTIVE (TYPE G)	4" THERMOPLASTIC STRIPE
		EA	LF
STA 105+00 TO STA 118+20	12	29	1320
STA 105+00 TO STA 118+20	27B		1320
TOTAL		29	2640

SUMMARY OF QUANTITIES
Q-1

STATE OF CALIFORNIA - DEPARTMENT OF TRANSPORTATION
Caltrans
06-DESIGN

FUNCTIONAL SUPERVISOR: ALI ALQATAMI
CALCULATED-DESIGNED BY: GEO F. LEYVA
CHECKED BY: LEE TSENG
REVISED BY
DATE REVISED

LAST REVISION 03-16-11
DATE PLOTTED => 20-JUN-2011
TIME PLOTTED => 12:52

DIST	COUNTY	ROUTE	POST MILES TOTAL PROJECT	SHEET NO.	TOTAL SHEETS
04	Son	101	R52.1/R52.5	11	41

Randell D. Hiatt
REGISTERED CIVIL ENGINEER

June 6, 2008
PLANS APPROVAL DATE

REGISTERED PROFESSIONAL ENGINEER
Randell D. Hiatt
No. C50200
Exp. 6-30-09
CIVIL
STATE OF CALIFORNIA

The State of California or its officers or agents shall not be responsible for the accuracy or completeness of electronic copies of this plan sheet.

To accompany plans dated 6-6-11

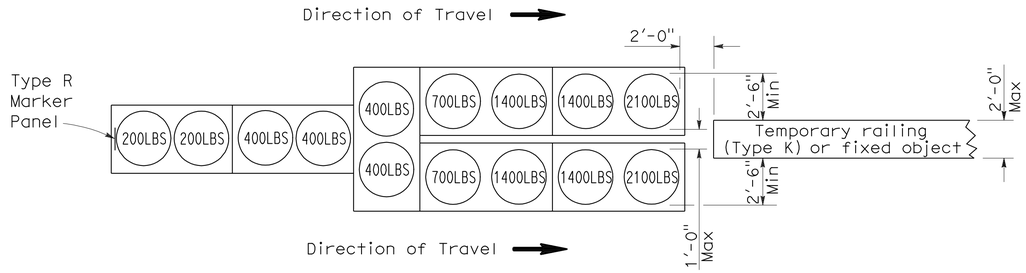

ARRAY 'TU14'

Approach speed 45 mph or more

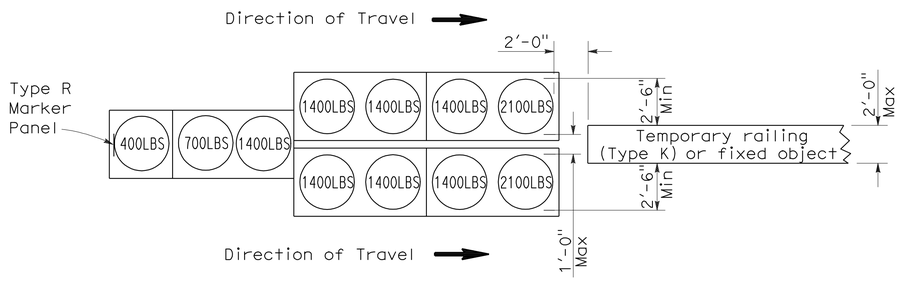

ARRAY 'TU11'

Approach speed less than 45 mph

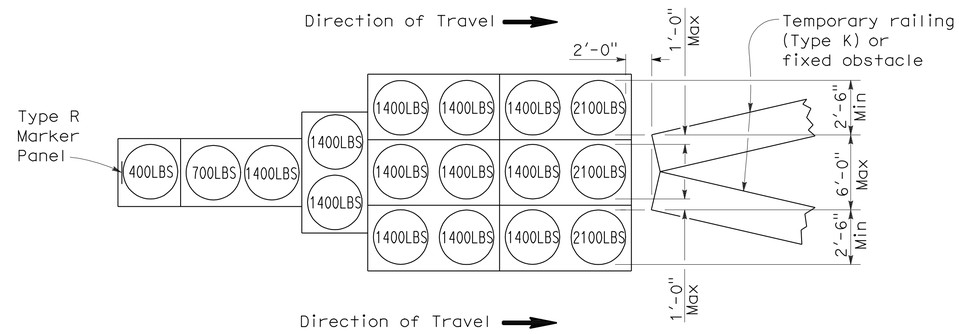

ARRAY 'TU17'

Approach speed less than 45 mph

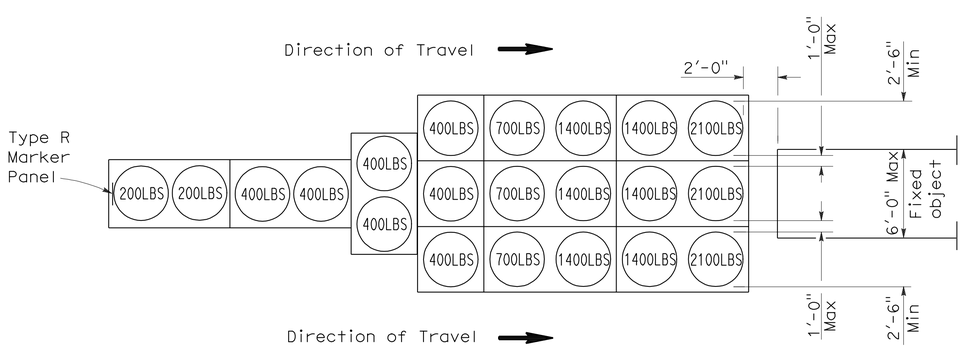

ARRAY 'TU21'

Approach speed 45 mph or more

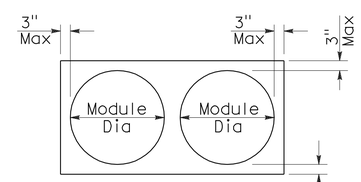

PLAN

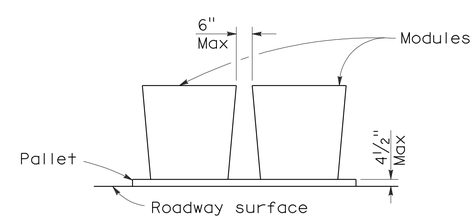

ELEVATION

CRASH CUSHION PALLET DETAIL

See Note 7

NOTES:

1. (XXX) Indicates sand filled module location and weight of sand in pounds for each module. Module spacing is based on the greater diameter of the module.
2. All sand weights are nominal.
3. Temporary crash cushion arrays shall not encroach on the traveled way.
4. Place the top of Type R marker panel 1" below the module lid.
5. Refer to Standard Plan A73B for marker details.
6. Approach speeds indicated conform to NCHRP 350 Report criteria.
7. Use of pallets is optional.

STATE OF CALIFORNIA
DEPARTMENT OF TRANSPORTATION

TEMPORARY CRASH CUSHION, SAND FILLED (UNIDIRECTIONAL)

NO SCALE

RSP T1A DATED JUNE 6, 2008 SUPERSEDES STANDARD PLAN T1A
DATED MAY 1, 2006 - PAGE 211 OF THE STANDARD PLANS BOOK DATED MAY 2006.

REVISED STANDARD PLAN RSP T1A

2006 REVISED STANDARD PLAN RSP T1A

5-15-08

DIST	COUNTY	ROUTE	POST MILES TOTAL PROJECT	SHEET NO.	TOTAL SHEETS
04	Son	101	R52.1/R52.5	12	41

Randell D. Hiatt
REGISTERED CIVIL ENGINEER

June 6, 2008
PLANS APPROVAL DATE

REGISTERED PROFESSIONAL ENGINEER
Randell D. Hiatt
No. C50200
Exp. 6-30-09
CIVIL
STATE OF CALIFORNIA

The State of California or its officers or agents shall not be responsible for the accuracy or completeness of electronic copies of this plan sheet.

To accompany plans dated 6-6-11

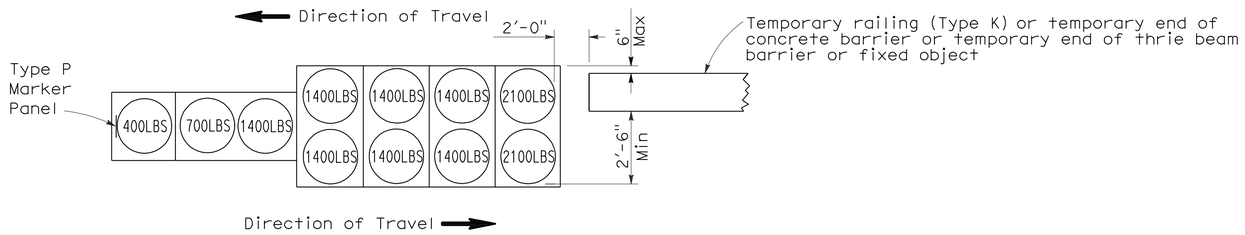

ARRAY 'TB11'

Approach speed less than 45 mph

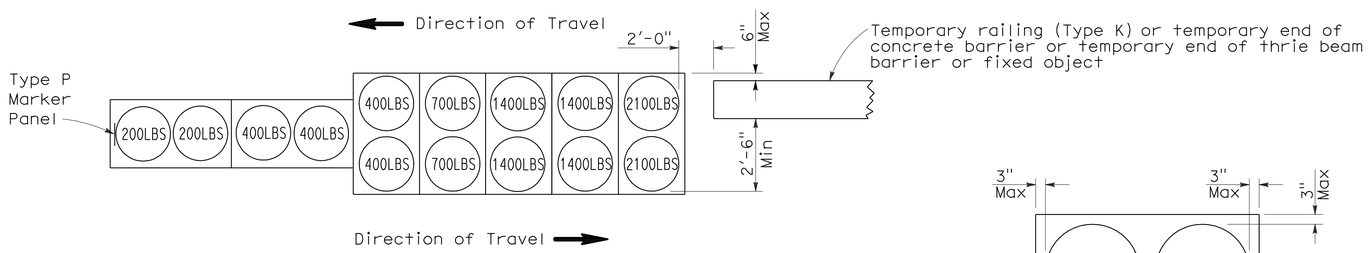

ARRAY 'TB14'

Approach speed 45 mph or more

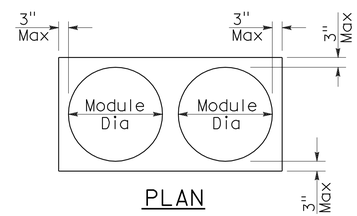

PLAN

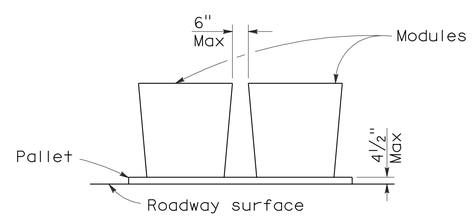

ELEVATION

CRASH CUSHION PALLET DETAIL

See Note 7

NOTES:

1. (XXX) Indicates sand filled module location and weight of sand in pounds for each module. Module spacing is based on the greater diameter of the module.
2. All sand weights are nominal.
3. Temporary crash cushion arrays shall not encroach on the traveled way.
4. Place the Type P marker panel so that the bottom of the panel rests upon the pallet.
5. Refer to Standard Plan A73B for marker details.
6. Approach speeds indicated conform to NCHRP 350 Report criteria.
7. Use of pallets is optional.

STATE OF CALIFORNIA
DEPARTMENT OF TRANSPORTATION

TEMPORARY CRASH CUSHION, SAND FILLED (BIDIRECTIONAL)

NO SCALE

RSP T1B DATED JUNE 6, 2008 SUPERSEDES STANDARD PLAN T1B
DATED MAY 1, 2006 - PAGE 212 OF THE STANDARD PLANS BOOK DATED MAY 2006.

REVISED STANDARD PLAN RSP T1B

2006 REVISED STANDARD PLAN RSP T1B

5-15-08

DIST	COUNTY	ROUTE	POST MILES TOTAL PROJECT	SHEET NO.	TOTAL SHEETS
04	Son	101	R52.1/R52.5	13	41

Randell D. Hiatt
REGISTERED CIVIL ENGINEER

June 6, 2008
PLANS APPROVAL DATE

REGISTERED PROFESSIONAL ENGINEER
Randell D. Hiatt
No. C50200
Exp. 6-30-09
CIVIL
STATE OF CALIFORNIA

The State of California or its officers or agents shall not be responsible for the accuracy or completeness of electronic copies of this plan sheet.

To accompany plans dated 6-6-11

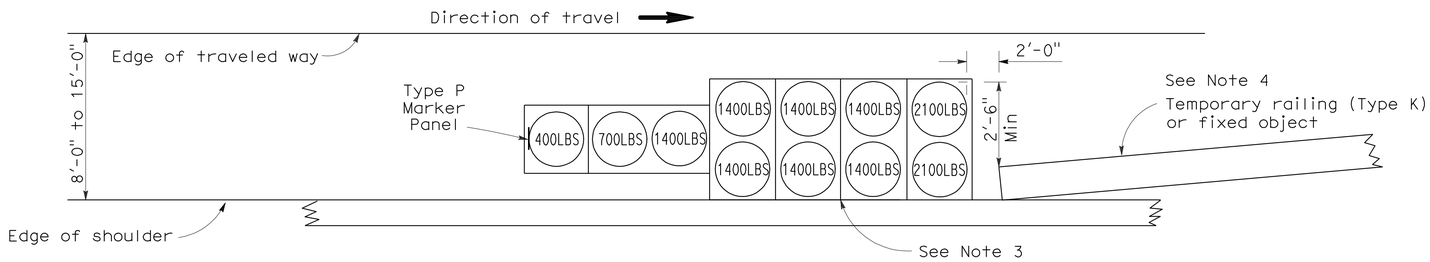

ARRAY 'TS11'

Approach speed less than 45 mph
See Note 9

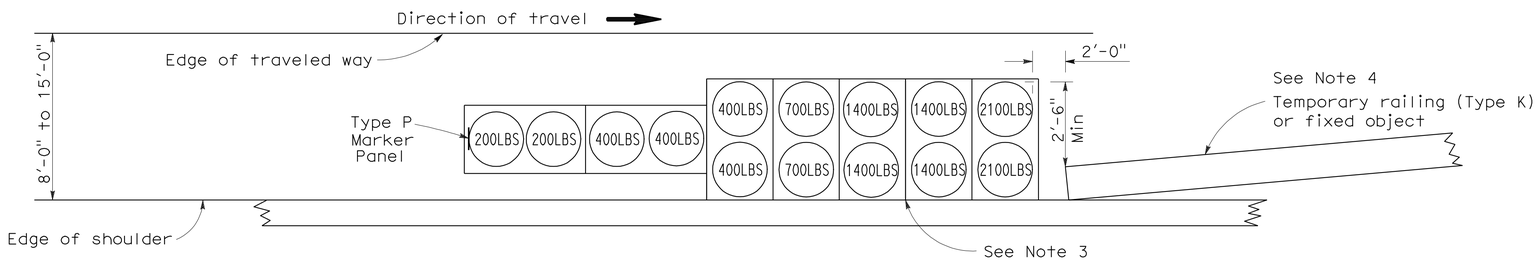

ARRAY 'TS14'

Approach speed 45 mph or more
See Note 9

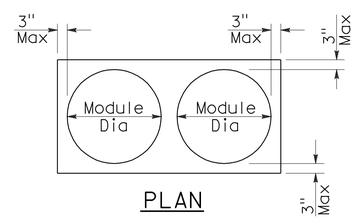

PLAN

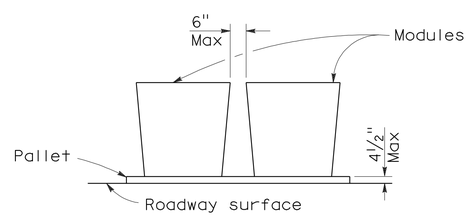

ELEVATION

CRASH CUSHION PALLET DETAIL

See Note 11

NOTES:

1. (XXX) Indicates sand filled module location and weight of sand in pounds for each module. Module spacing is based on the greater diameter of the module.
2. All sand weights are nominal.
3. The temporary crash cushion arrays shown on this plan shall be used only in locations where there will be traffic on one side of the temporary crash cushion array.
4. If the fixed object or approach end of the temporary railing is less than 15'-0" from the edge of traveled way, a temporary crash cushion is required in a construction or work zone.
5. Temporary crash cushion arrays shall not encroach on the traveled way.
6. Arrays for median shoulders shall conform to details shown on this plan for outside shoulders.
7. Place the Type P marker panel so that the bottom of the panel rests upon the pallet and faces traffic.
8. Refer to Standard Plan A73B for marker details.
9. For shoulder widths less than 8'-0", appropriate approved crash cushion protection, other than sand filled modules, shall be provided at fixed objects and at approach ends of temporary railing. The specific type of crash cushion shall be as shown on the project plans or as specified in the Special Provisions, or if not shown on the project plans or specified in the Special Provisions, shall be as approved by the Engineer.
10. Approach speeds indicated conform to NCHRP 350 Report criteria.
11. Use of pallets is optional.

STATE OF CALIFORNIA
DEPARTMENT OF TRANSPORTATION

TEMPORARY CRASH CUSHION, SAND FILLED (SHOULDER INSTALLATIONS)

NO SCALE

RSP T2 DATED JUNE 6, 2008 SUPERSEDES STANDARD PLAN T2
DATED MAY 1, 2006 - PAGE 213 OF THE STANDARD PLANS BOOK DATED MAY 2006.

REVISED STANDARD PLAN RSP T2

2006 REVISED STANDARD PLAN RSP T2

5-15-08

DIST	COUNTY	ROUTE	POST MILES TOTAL PROJECT	SHEET NO.	TOTAL SHEETS
04	Son	101	R52.1/R52.5	14	41

REGISTERED CIVIL ENGINEER

November 17, 2006
PLANS APPROVAL DATE

Greg W. Edwards No. C36386 Exp. 6-30-08 CIVIL — REGISTERED PROFESSIONAL ENGINEER — STATE OF CALIFORNIA

The State of California or its officers or agents shall not be responsible for the accuracy or completeness of electronic copies of this plan sheet.

To accompany plans dated 6-6-11

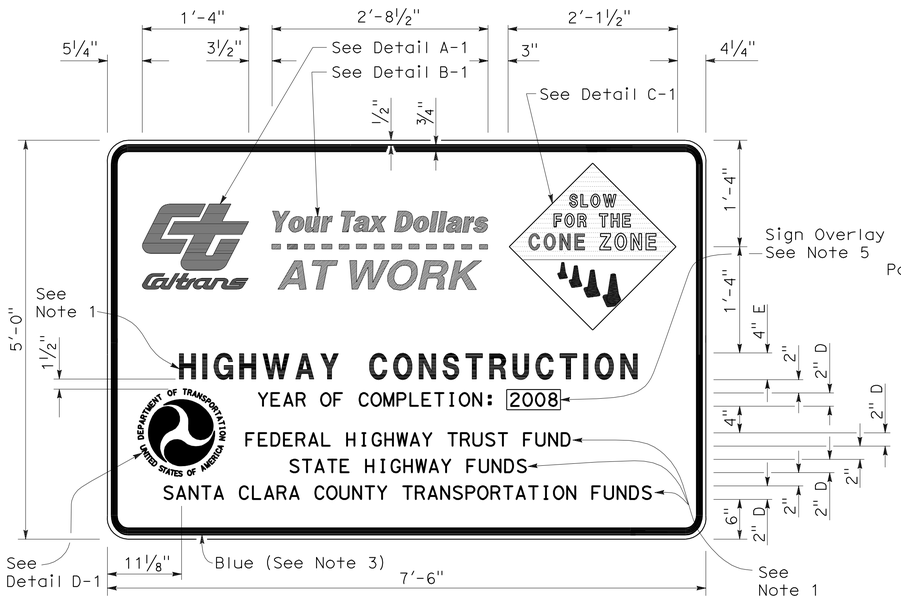

TYPE 1

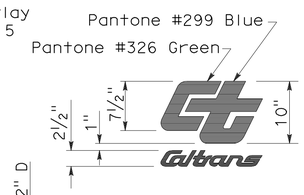

DETAIL A-1

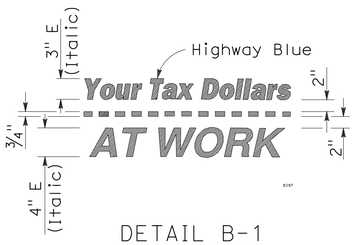

DETAIL B-1
(See Note 3)

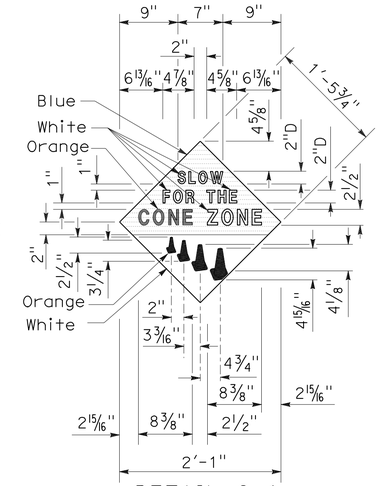

DETAIL C-1
(See Note 4)

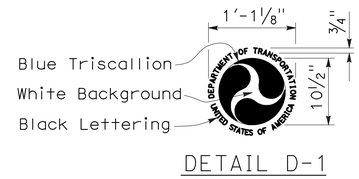

DETAIL D-1
(See Note 6)

NOTES:

1. The sign messages shown for type of project and fund types are examples only. See the Special Provisions for the applicable type of project and fund type messages to be used.
2. Except as otherwise shown, the legend of sign shall be black on a white background (non-reflective).
3. The border of the signs and details "B-1" and "B-2" shall be blue (non-reflective).
4. The diamond in details "C-1" and "C-2" shall be blue for the background of message, " SLOW FOR THE CONE ZONE", and white background for the orange cones. The color and type of font for the "SLOW FOR THE CONE ZONE" message shall be: "SLOW" white D; "FOR THE" white D; "CONE" orange Arial font; "ZONE" white Arial font.
5. Year of completion of project construction shown on the overlay is an example only. See the Special Provisions.
6. Use when the Project involves Federal Highway Trust Fund.

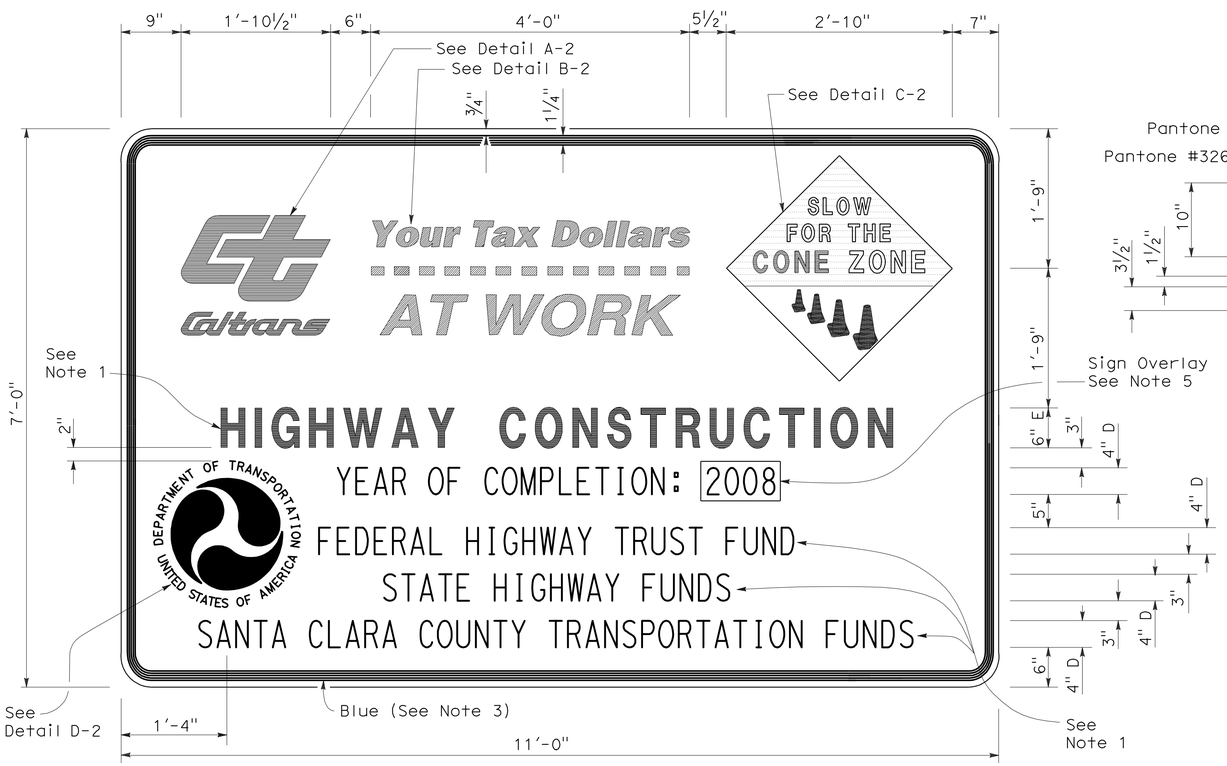

TYPE 2

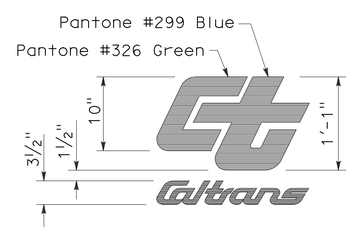

DETAIL A-2

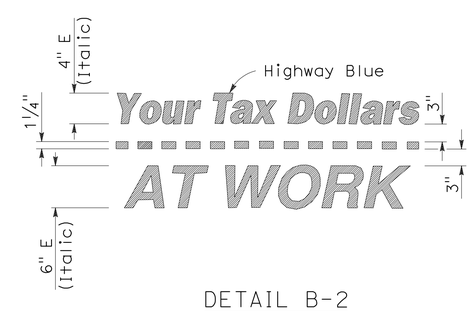

DETAIL B-2
(See Note 3)

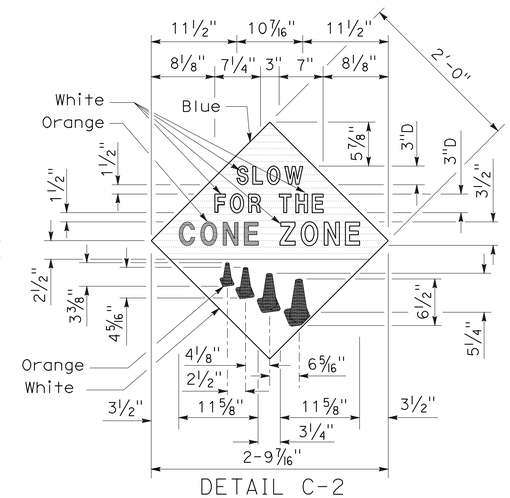

DETAIL C-2
(See Note 4)

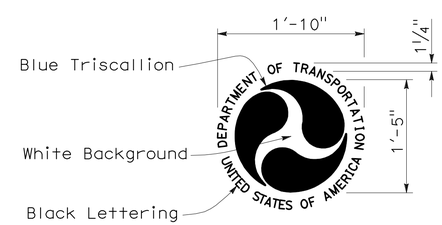

DETAIL D-2
(See Note 6)

STATE OF CALIFORNIA
DEPARTMENT OF TRANSPORTATION

CONSTRUCTION PROJECT FUNDING IDENTIFICATION SIGNS

NO SCALE

RSP T7 DATED NOVEMBER 17, 2006 SUPERSEDES STANDARD PLAN T7
DATED MAY 1, 2006 - PAGE 217 OF THE STANDARD PLANS BOOK DATED MAY 2006.

REVISED STANDARD PLAN RSP T7

2006 REVISED STANDARD PLAN RSP T7

9-7-06

DIST	COUNTY	ROUTE	POST MILES TOTAL PROJECT	SHEET NO.	TOTAL SHEETS
04	Son	101	R52.1/R52.5	15	41

LICENSED LANDSCAPE ARCHITECT

August 15, 2008
PLANS Approval DATE

The State of California or its officers or agents shall not be responsible for the accuracy or completeness of electronic copies of this plan sheet.

LICENSED LANDSCAPE ARCHITECT — Robert B. Schott — Signature 11-04-08 Renewal Date — 08-11-08 Date — STATE OF CALIFORNIA

To accompany plans dated 6-6-11

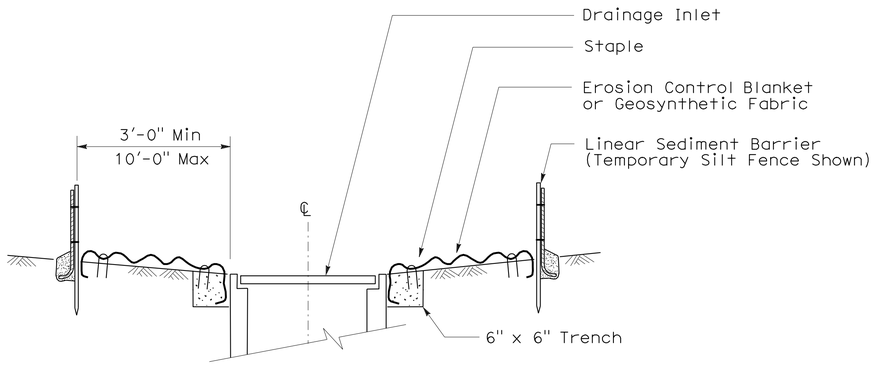

SECTION A-A

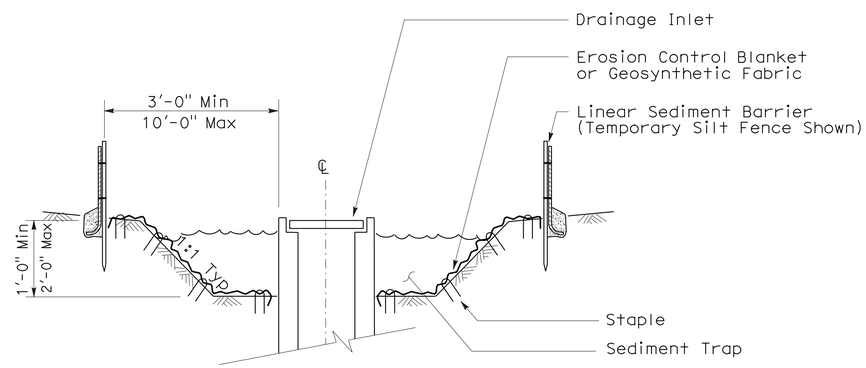

SECTION B-B

NOTES:

1. See Standard Plan T51 for Temporary Silt Fence.
2. Dimensions may vary to fit field conditions.

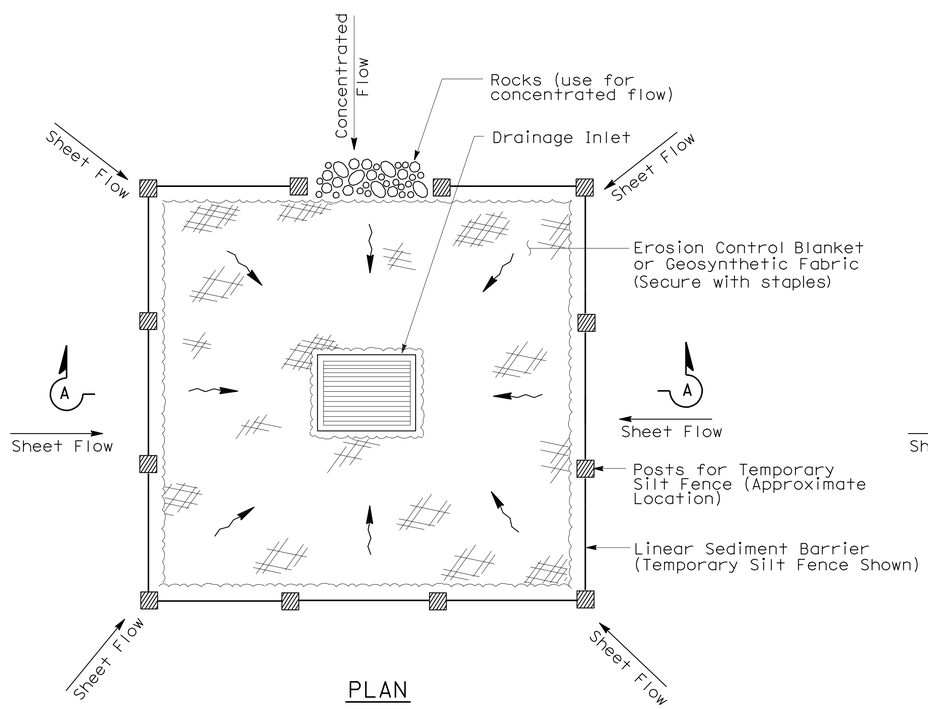

PLAN

TEMPORARY DRAINAGE INLET PROTECTION (TYPE 1)

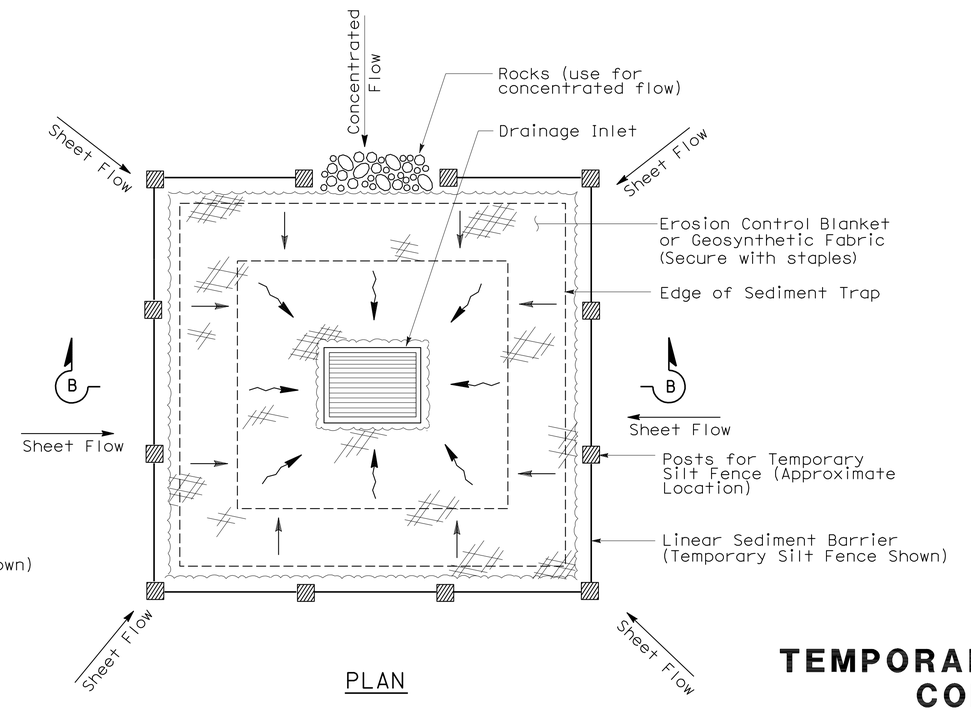

PLAN

TEMPORARY DRAINAGE INLET PROTECTION (TYPE 2) (EXCAVATED SEDIMENT TRAP)

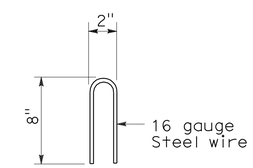

STAPLE DETAIL

STATE OF CALIFORNIA
DEPARTMENT OF TRANSPORTATION

TEMPORARY WATER POLLUTION CONTROL DETAILS (TEMPORARY DRAINAGE INLET PROTECTION)

NO SCALE

NSP T61 DATED AUGUST 15, 2008 SUPPLEMENTS THE STANDARD PLANS BOOK DATED MAY 2006.

NEW STANDARD PLAN NSP T61

2006 NEW STANDARD PLAN NSP T61

7-11-08

DIST	COUNTY	ROUTE	POST MILES TOTAL PROJECT	SHEET NO.	TOTAL SHEETS
04	Son	101	R52.1/R52.5	16	41

LICENSED LANDSCAPE ARCHITECT

August 15, 2008
PLANS APPROVAL DATE

LICENSED LANDSCAPE ARCHITECT — Robert B. Schott — Signature 11-04-08 Renewal Date — 08-11-08 Date — STATE OF CALIFORNIA

The State of California or its officers or agents shall not be responsible for the accuracy or completeness of electronic copies of this plan sheet.

To accompany plans dated 6-6-11

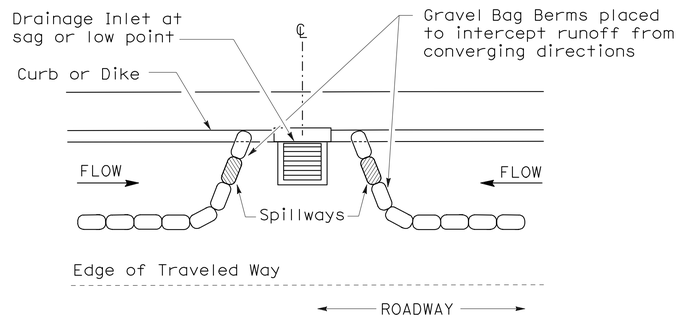

PLAN

CONFIGURATION FOR SAG POINT INLET (GRAVEL BAG BERM)

GRAVEL BAG BERM (TYPE 3A) SPACING TABLE

SLOPE OF ROADWAY (PERCENT)	1 to 3.9	4 to 5.9	6 to 7.9	8 to 10	10+
INTERVAL BETWEEN BERM	100′	75′	50′	25′	12′

For slope of less than 1%, install barriers only if erosion/sediment is prevalent

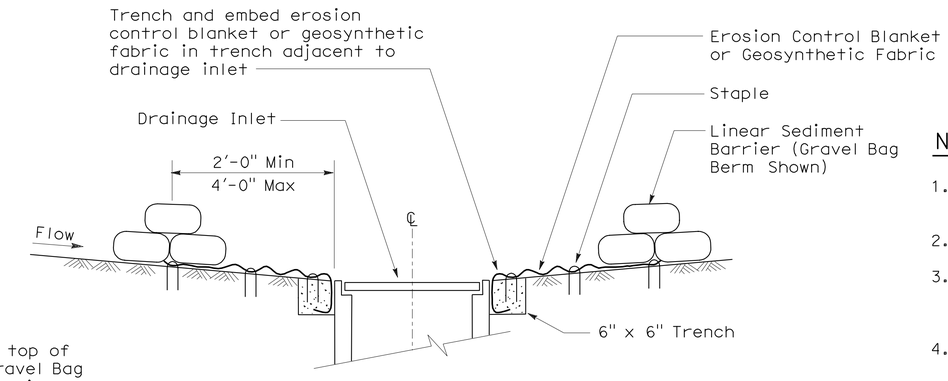

SECTION A-A

NOTES:

1. Place safety cones adjacent to drainage inlet protection.
2. Dimensions may vary to fit field conditions.
3. Install a minimum of 3 gravel bag berms upstream of each drainage inlet to be protected.
4. Position erosion control blanket or geosynthetic fabric at edge of concrete apron and secure in trench.
5. Erosion control blanket or geosynthetic fabric is not required if the area adjacent to the drainage inlet is vegetated or paved.

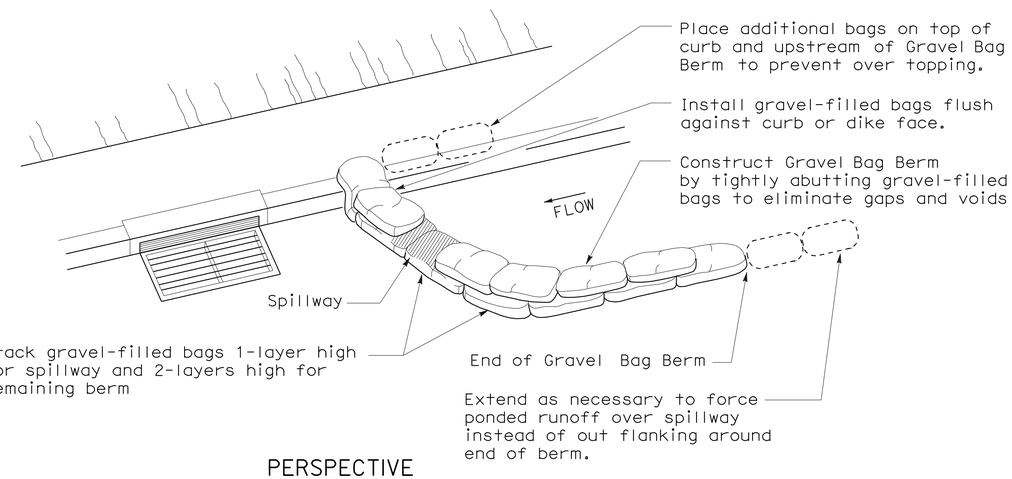

PERSPECTIVE

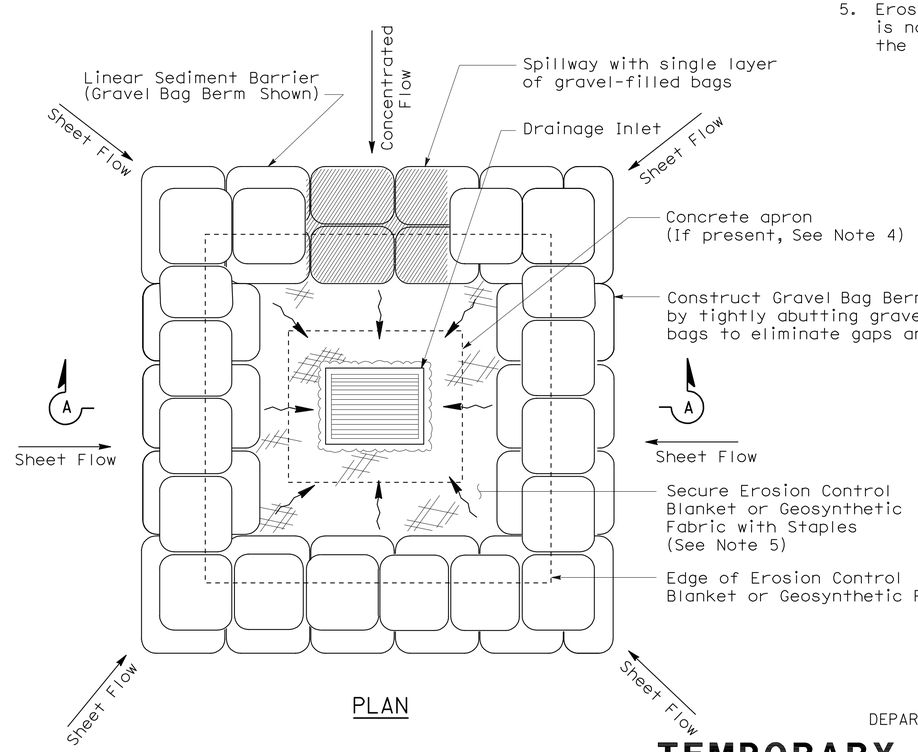

PLAN

TEMPORARY DRAINAGE INLET PROTECTION (TYPE 3B)

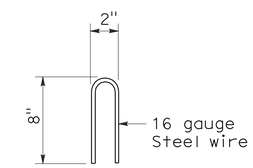

STAPLE DETAIL

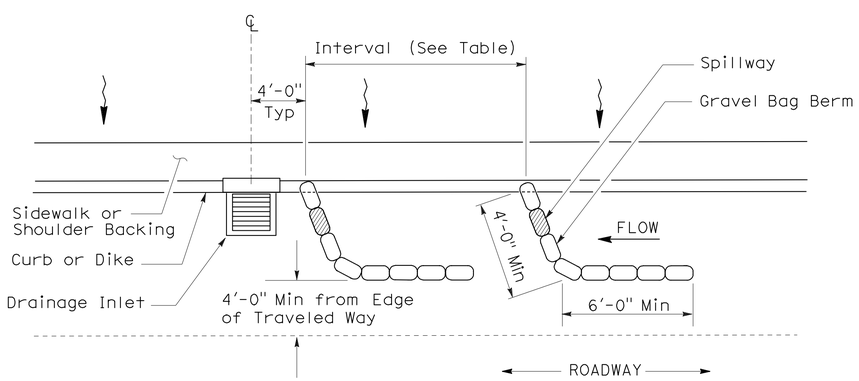

PLAN

TEMPORARY DRAINAGE INLET PROTECTION (TYPE 3A) (GRAVEL BAG BERM)

STATE OF CALIFORNIA
DEPARTMENT OF TRANSPORTATION

TEMPORARY WATER POLLUTION CONTROL DETAILS (TEMPORARY DRAINAGE INLET PROTECTION)

NO SCALE

NSP T62 DATED AUGUST 15, 2008 SUPPLEMENTS THE STANDARD PLANS BOOK DATED MAY 2006.

NEW STANDARD PLAN NSP T62

2006 NEW STANDARD PLAN NSP T62

7-11-08

DIST	COUNTY	ROUTE	POST MILES TOTAL PROJECT	SHEET NO.	TOTAL SHEETS
04	Son	101	R52.1/R52.5	17	41

Robert B Schott
LICENSED LANDSCAPE ARCHITECT

August 15, 2008
PLANS APPROVAL DATE

The State of California or its officers or agents shall not be responsible for the accuracy or completeness of electronic copies of this plan sheet.

LICENSED LANDSCAPE ARCHITECT — Robert B. Schott — Signature — 11-04-08 Renewal Date — 08-11-08 Date — STATE OF CALIFORNIA

To accompany plans dated 6-6-11

FLEXIBLE SEDIMENT BARRIER SPACING TABLE

SLOPE OF ROADWAY (PERCENT)	0 to 0.9	1 to 1.9	2 to 2.9	3 to 4	5+
INTERVAL BETWEEN BARRIERS	50′	35′	30′	25′	20′
ANGLE FROM FACE OF CURB	70°	70°	70°	45°	45°
SUGGESTED BARRIER LENGTH	6′	6′	6′	6′	6′

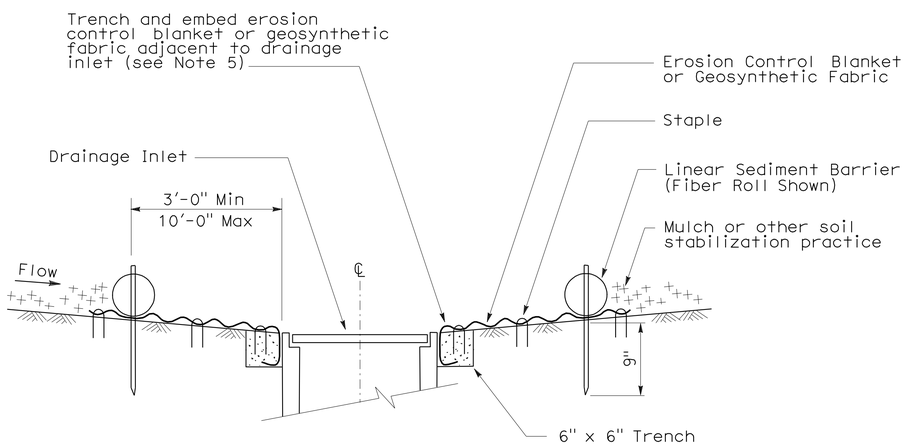

SECTION A-A

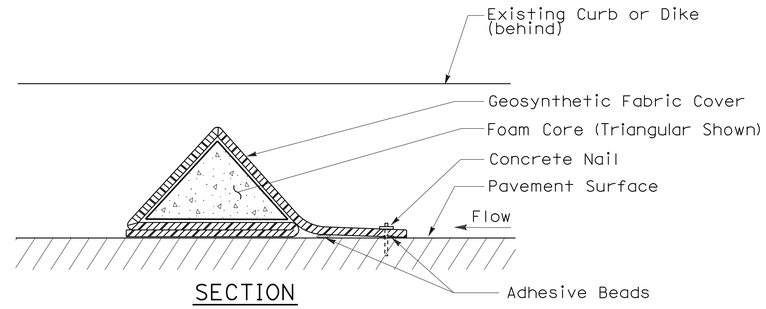

SECTION

FLEXIBLE SEDIMENT BARRIER DETAIL (FOAM BARRIER SHOWN)

NOTES:

1. See Standard Plan T51 for Temporary Silt Fence.
2. Dimensions may vary to fit field conditions.
3. Install a minimum of 3 flexible sediment barriers upstream of each drainage inlet to be protected.
4. Position erosion control blanket or geosynthetic fabric at edge of concrete apron and secure in trench.
5. Erosion control blanket or geosynthetic fabric is not required if the area adjacent to the drainage inlet is vegetated.

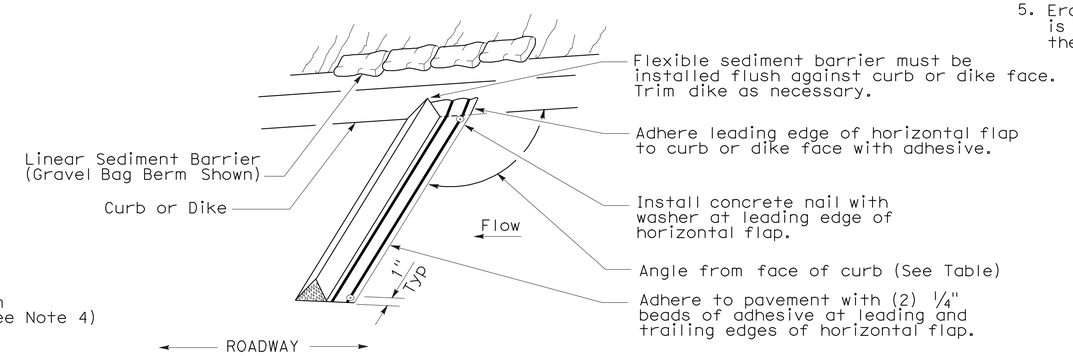

PERSPECTIVE

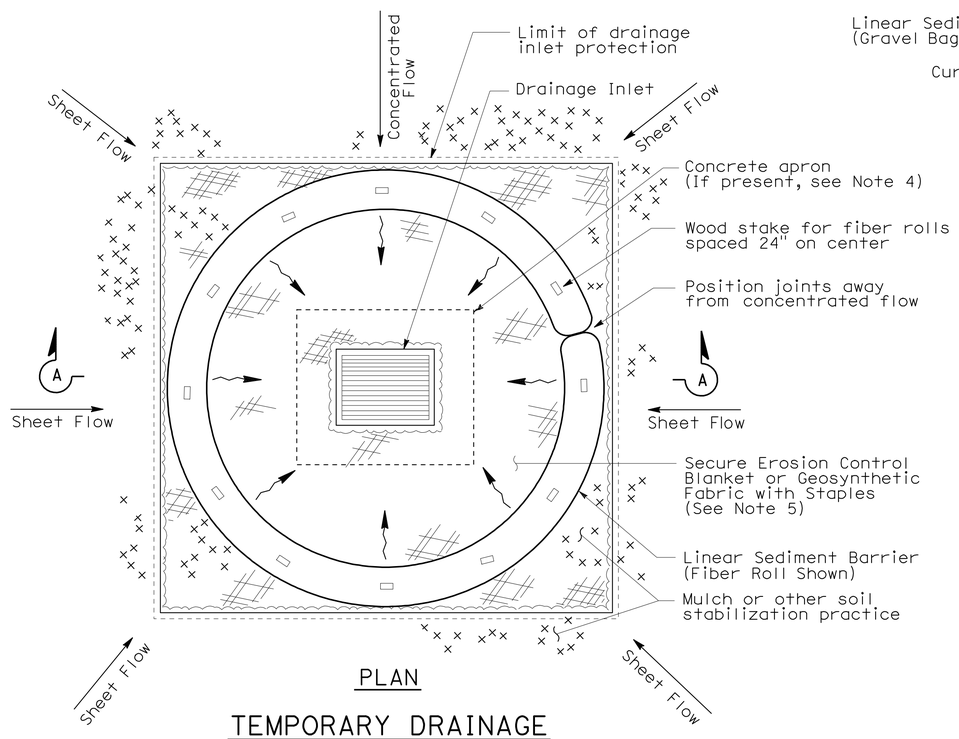

PLAN

TEMPORARY DRAINAGE INLET PROTECTION (TYPE 4A)

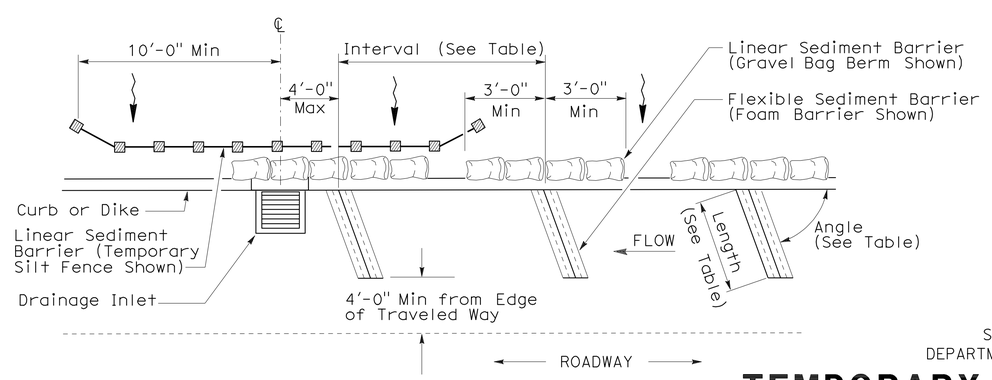

PLAN

TEMPORARY DRAINAGE INLET PROTECTION (TYPE 4B) FLEXIBLE SEDIMENT BARRIER

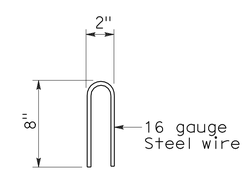

STAPLE DETAIL

STATE OF CALIFORNIA
DEPARTMENT OF TRANSPORTATION

TEMPORARY WATER POLLUTION CONTROL DETAILS (TEMPORARY DRAINAGE INLET PROTECTION)

NO SCALE

NSP T63 DATED AUGUST 15, 2008 SUPPLEMENTS THE STANDARD PLANS BOOK DATED MAY 2006.

NEW STANDARD PLAN NSP T63

2006 NEW STANDARD PLAN NSP T63

7-11-08

DIST	COUNTY	ROUTE	POST MILES TOTAL PROJECT	SHEET NO.	TOTAL SHEETS
04	Son	101	R52.1/R52.5	18	41

LICENSED LANDSCAPE ARCHITECT

August 15, 2008
PLANS APPROVAL DATE

LICENSED LANDSCAPE ARCHITECT — Robert B. Schott — Signature 11-04-08 Renewal Date — 08-11-08 Date — STATE OF CALIFORNIA

The State of California or its officers or agents shall not be responsible for the accuracy or completeness of electronic copies of this plan sheet.

To accompany plans dated 6-6-11

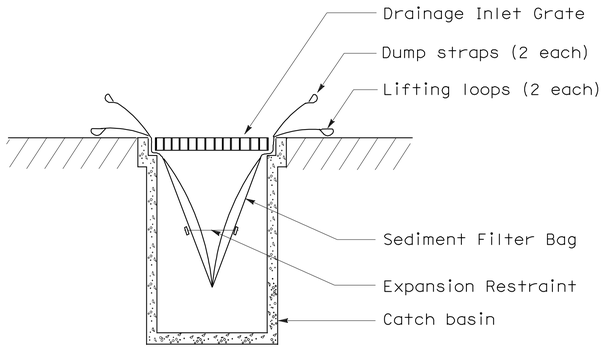

SECTION B-B

SEDIMENT FILTER BAG DETAIL

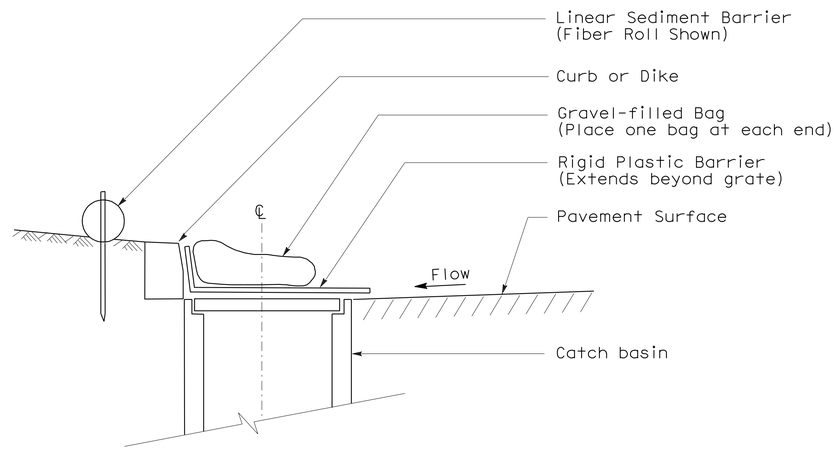

SECTION

TEMPORARY DRAINAGE INLET PROTECTION (TYPE 6A) (CATCH BASIN WITH GRATE)

NOTES:

1. See Standard Plan T51 for Temporary Silt Fence.
2. Dimensions may vary to fit field conditions.

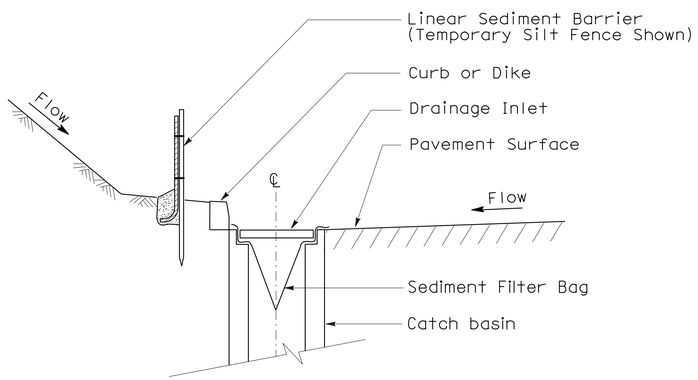

SECTION A-A

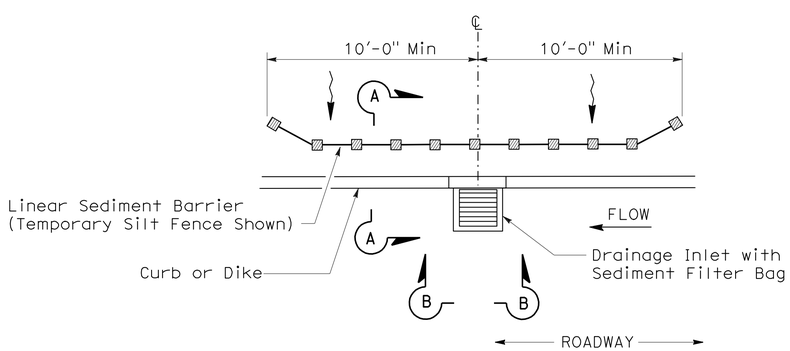

PLAN

TEMPORARY DRAINAGE INLET PROTECTION (TYPE 5) (SEDIMENT FILTER BAG)

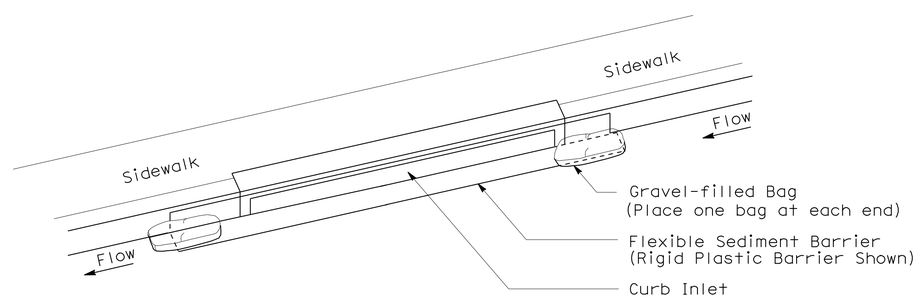

PERSPECTIVE

TEMPORARY DRAINAGE INLET PROTECTION (TYPE 6B) (CURB INLET WITHOUT GRATE)

STATE OF CALIFORNIA
DEPARTMENT OF TRANSPORTATION

TEMPORARY WATER POLLUTION CONTROL DETAILS (TEMPORARY DRAINAGE INLET PROTECTION)

NO SCALE

NSP T64 DATED AUGUST 15, 2008 SUPPLEMENTS THE STANDARD PLANS BOOK DATED MAY 2006.

NEW STANDARD PLAN NSP T64

2006 NEW STANDARD PLAN NSP T64

7-11-08

DIST	COUNTY	ROUTE	POST MILES TOTAL PROJECT	SHEET No.	TOTAL SHEETS
04	Son	101	R52.1/R52.5	19	41

REGISTERED CIVIL ENGINEER — DATE 2-8-11

6-6-11
PLANS APPROVAL DATE

REGISTERED PROFESSIONAL ENGINEER — ISAIAS D. YALAN — No. 68269 — Exp. 9-30-2011 — CIVIL — STATE OF CALIFORNIA

The State of California or its officers or agents shall not be responsible for the accuracy or completeness of electronic copies of this plan sheet.

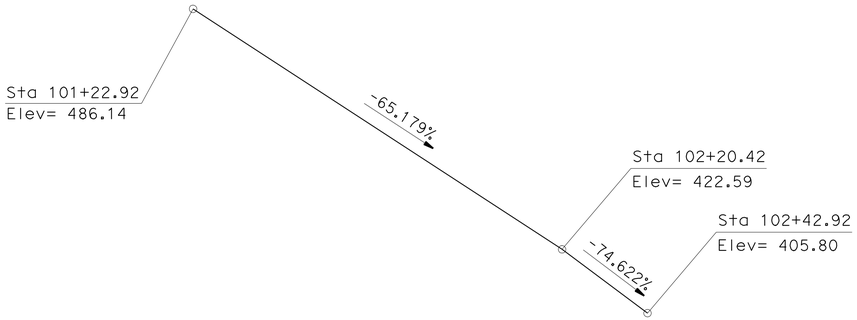

TOP OF WALL PROFILE

1" = 20'

QUANTITIES

24" CAST-IN-DRILLED-HOLE CONCRETE PILING	345	LF
BAR REINFORCING STEEL	9,900	LB

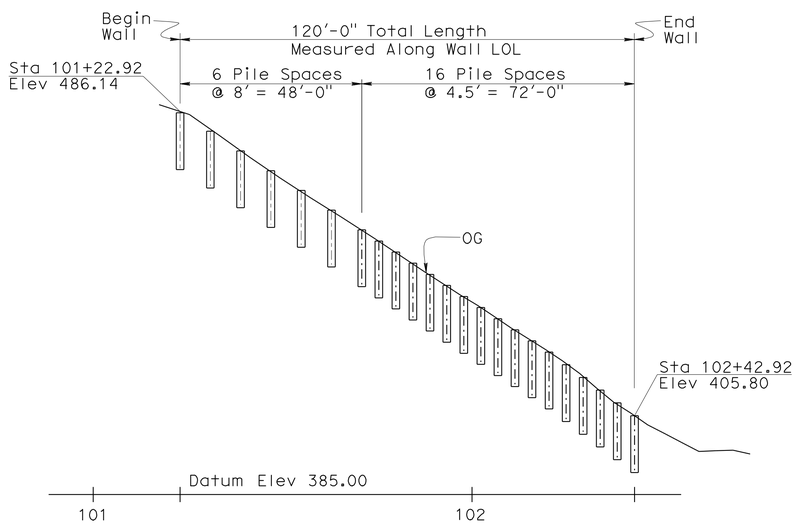

ELEVATION

1" = 20'

STANDARD PLANS DATED MAY 2006

A10A	ACRONYMS AND ABBREVIATIONS (SHEET 1 OF 2)
A10B	ACRONYMS AND ABBREVIATIONS (SHEET 2 OF 2)
A10C	SYMBOLS (SHEET 1 OF 2)
A10D	SYMBOLS (SHEET 2 OF 2)
B2-3	16" AND 24" CAST-IN-DRILLED-HOLE CONCRETE PILE

STANDARD PLAN SHEET No.

DETAIL No.

INDEX TO PLANS

1 GENERAL PLAN
2 FOUNDATION PLAN
3 TYPICAL SECTION
4 LOG OF TEST BORINGS 1 OF 3
5 LOG OF TEST BORINGS 2 OF 3
6 LOG OF TEST BORINGS 3 OF 3

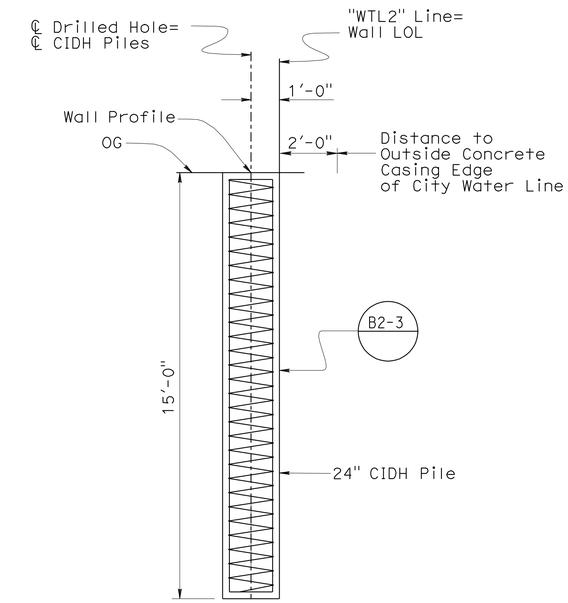

TYPICAL SECTION

3/8" = 1'-0"

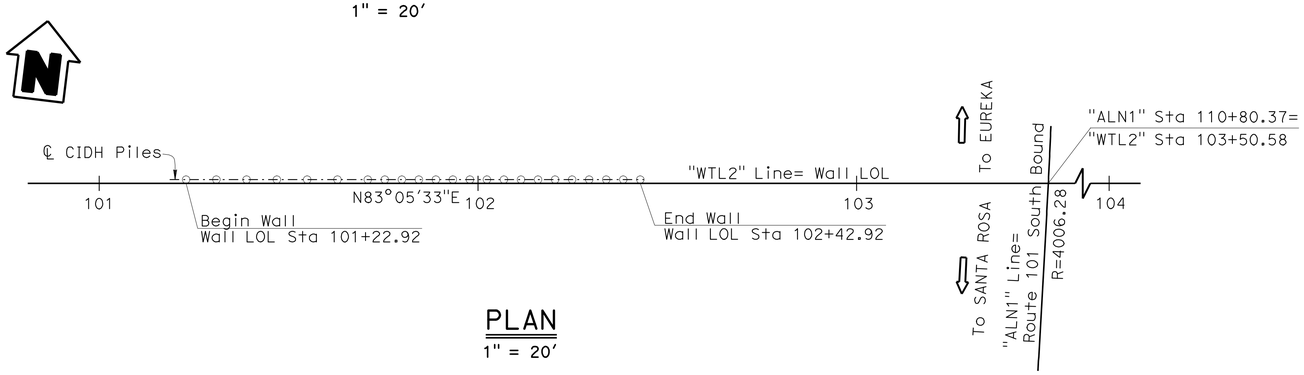

PLAN

1" = 20'

DESIGN	BY Isaias Yalan	CHECKED Nasser Tachta	LOAD & RESISTANCE FACTOR DESIGN		
DETAILS	BY Rania Heider	CHECKED Nasser Tachta	LAYOUT	BY Isaias Yalan	CHECKED Nasser Tachta
QUANTITIES	BY Isaias Yalan	CHECKED Nasser Tachta	SPECIFICATIONS	BY C. Siegenthaler	PLANS AND SPECS COMPARED C. Siegenthaler

Gordon Danke
DESIGN ENGINEER

ORIGINAL SCALE IN INCHES FOR REDUCED PLANS 0 1 2 3

STATE OF CALIFORNIA
DEPARTMENT OF TRANSPORTATION

DIVISION OF ENGINEERING SERVICES
STRUCTURE DESIGN
DESIGN BRANCH 9

BRIDGE NO. 20E0061
POST MILE 52.1/52.5

SPIRAL CAGED REINFORCED CIDH PILES
GENERAL PLAN

UNIT: 3594
PROJECT NUMBER & PHASE: 04 0000 1255-1 CONTRACT NO.: 04-4S6501

DISREGARD PRINTS BEARING EARLIER REVISION DATES

REVISION DATES: 7-28-10 12-29-10 1-07-11

SHEET 1 OF 6

USERNAME => s135318 DATE PLOTTED => 07-JUN-2011 TIME PLOTTED => 10:26

STRUCTURES DESIGN GENERAL PLAN SHEET (ENGLISH) (REV.09-01-10)

FILE => 20e0061-a-gp.dgn

DIST	COUNTY	ROUTE	POST MILES TOTAL PROJECT	SHEET No.	TOTAL SHEETS
04	Son	101	R52.1/R52.5	20	41

REGISTERED CIVIL ENGINEER — DATE 1-26-11

6-6-11
PLANS APPROVAL DATE

REGISTERED PROFESSIONAL ENGINEER — ISAIAS D. YALAN — No. 68269 — Exp. 9-30-2011 — CIVIL — STATE OF CALIFORNIA

The State of California or its officers or agents shall not be responsible for the accuracy or completeness of electronic copies of this plan sheet.

CURVE DATA

No.	R	Δ	T	L
(A)	4006.28	27°30'47"	980.81	1923.78

SURVEY CONTROL

PM96 (Not Shown On Plan)
Fnd 1" IP w/ CalTrans PP
212.70 Ft Rt "ALN1" Line, Rte 101
Sta 107+48.79
N 417,824.40
E 1,712,187.68
Elev= 358.69

PM97 (Not Shown On Plan)
Fnd 1" IP w/ CalTrans PP
194.14 Ft Rt "ALN1" Line, Rte 101
Sta 111+10.63
N 418,203.63
E 1,712,156.19
Elev= 367.01

Note:
(BW) = Begin Wall
Sta 101+22.92
(EW) = End Wall
Sta 102+42.92

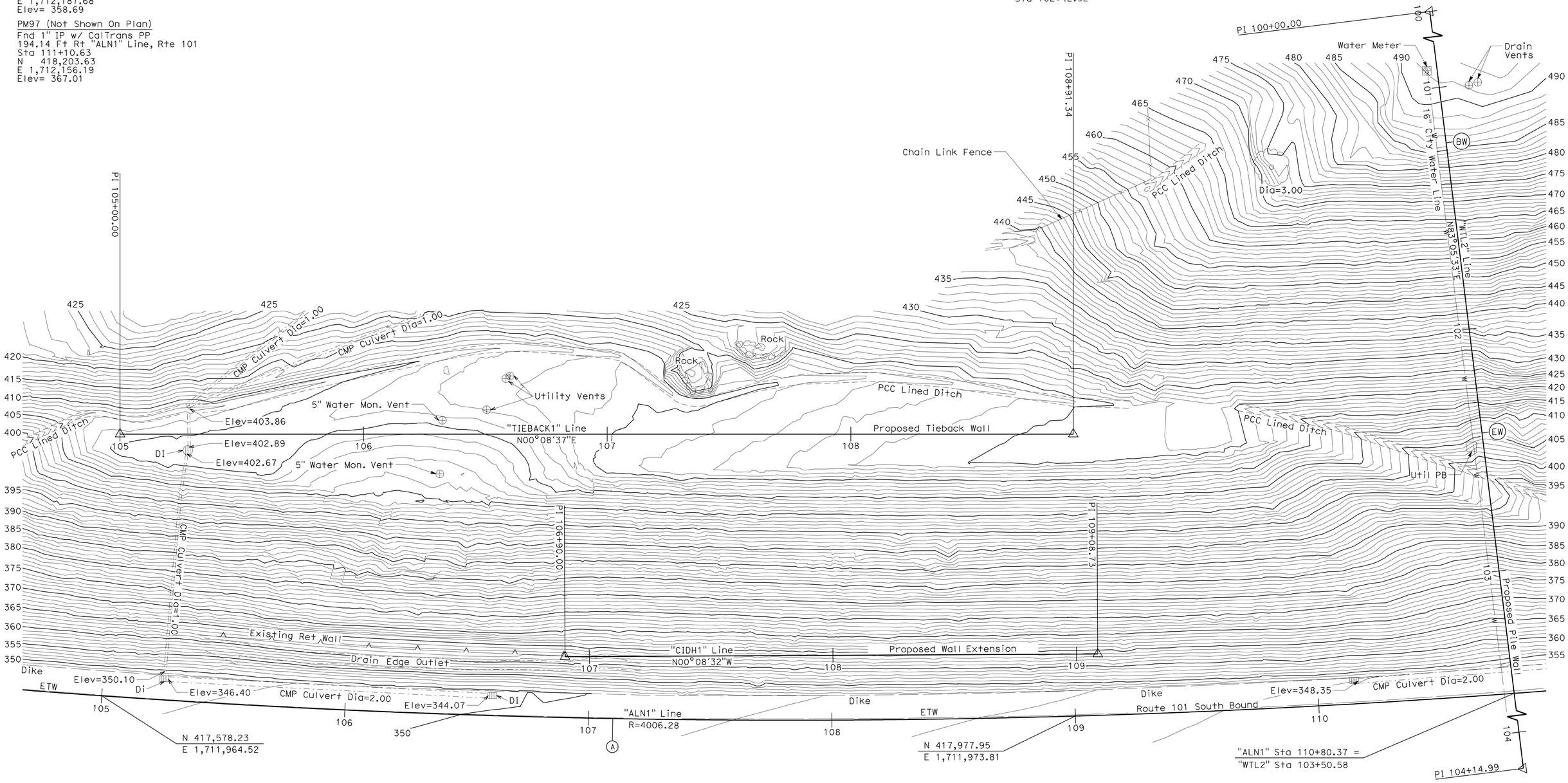

PRELIMINARY INVESTIGATION SECTION

SCALE	VERT.DATUM NGVD29	PHOTOGRAMMETRY AS OF: X					
1"=20'	HORZ.DATUM NAD27	SURVEYED	BY District	12/2009	CHECKED	BY J.Borden	07/2010
ALIGNMENT TIES Dist. Traverse Sheet		DRAFTED	BY J.Martinez	07/2010	CHECKED	BY S.Sou	07/2010

DESIGN	BY Isaias Yalan	CHECKED Nassar Tachta
DETAILS	BY Tim Fairall	CHECKED Nassar Tachta
QUANTITIES	BY Isaias Yalan	CHECKED Nassar Tachta

STATE OF CALIFORNIA
DEPARTMENT OF TRANSPORTATION

DIVISION OF ENGINEERING SERVICES
STRUCTURE DESIGN
DESIGN BRANCH 9

BRIDGE NO. 20E0061
POST MILE 52.1/52.5

SPIRAL CAGED REINFORCED CIDH PILES
FOUNDATION PLAN

STRUCTURES FOUNDATION PLAN SHEET (ENGLISH) (REV. 09-01-10)

ORIGINAL SCALE IN INCHES FOR REDUCED PLANS 0 1 2 3

UNIT: 3594
PROJECT NUMBER & PHASE: 0400001255 1
CONTRACT NO.: 04-4S6501

DISREGARD PRINTS BEARING EARLIER REVISION DATES

REVISION DATES: 01/03/11 02/04/11 02/07/11

SHEET 2 OF 6

FILE => 20e0061-e-fpl01.dgn

DIST	COUNTY	ROUTE	POST MILES TOTAL PROJECT	SHEET No.	TOTAL SHEETS
04	Son	101	R52.1/R52.5	21	41

REGISTERED CIVIL ENGINEER 2-8-11 DATE

6-6-11
PLANS APPROVAL DATE

REGISTERED PROFESSIONAL ENGINEER
ISAIAS D. YALAN
No. 68269
Exp. 9-30-2011
CIVIL
STATE OF CALIFORNIA

The State of California or its officers or agents shall not be responsible for the accuracy or completeness of electronic copies of this plan sheet.

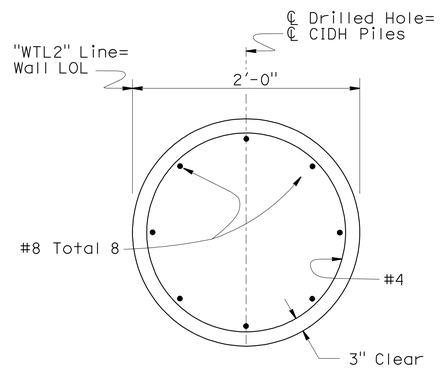

SECTION A-A

¾" = 1'-0"

NOTE:

Drilling for a CIDH pile shall not be performed until the adjacent pile or piles are complete and the concrete has reached a compressive strength of 3200 psi.

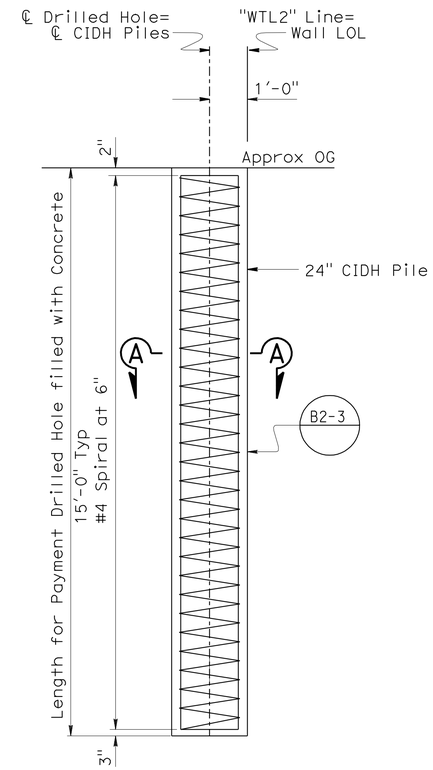

TYPICAL SECTION

½" = 1'-0"

DESIGN	BY Isaias Yalan	CHECKED Nasser Tachta	
DETAILS	BY Rania Heider	CHECKED Nasser Tachta	
QUANTITIES	BY Isaias Yalan	CHECKED Nasser Tachta	

STATE OF CALIFORNIA
DEPARTMENT OF TRANSPORTATION

DIVISION OF ENGINEERING SERVICES
STRUCTURE DESIGN
DESIGN BRANCH 9

BRIDGE NO. 20E0061
POST MILE 52.1/52.5

SPIRAL CAGED REINFORCED CIDH PILES
TYPICAL SECTION

STRUCTURES DESIGN DETAIL SHEET (ENGLISH) (REV. 09-01-10)

ORIGINAL SCALE IN INCHES FOR REDUCED PLANS 0 1 2 3

UNIT: 3594
PROJECT NUMBER & PHASE: 04 0000 1255-1 CONTRACT NO.: 04-4S6501

DISREGARD PRINTS BEARING EARLIER REVISION DATES

REVISION DATES: 8-03-10 8-27-10 11-01-10 1-10-11

SHEET 3 OF 6

FILE => 20e0061-k-ts.dgn

USERNAME => s135318 DATE PLOTTED => 07-JUN-2011 TIME PLOTTED => 10:26

DIST.	COUNTY	ROUTE	POST MILES TOTAL PROJECT	SHEET NO.	TOTAL SHEETS
04	Son	101	R52.1/R52.5	22	41

Ali Kaddoura 11-04-10
REGISTERED ENGINEER - CIVIL
6-6-11
PLANS APPROVAL DATE

REGISTERED PROFESSIONAL ENGINEER Ali K. Kaddoura No. 55710 Exp. 12-31-12 CIVIL STATE OF CALIFORNIA

The State of California or its officers or agents shall not be responsible for the accuracy or completeness of electronic copies of this plan sheet.

NOTE: 1. The indicated numbers for Standard Penetration Tests, (SPT), are the uncorrected field values obtained during drilling.

2. The SPT for borings SH-1 and SH-2 were performed using an automatic drop safety hammer with 140 lbs./ 30 in.

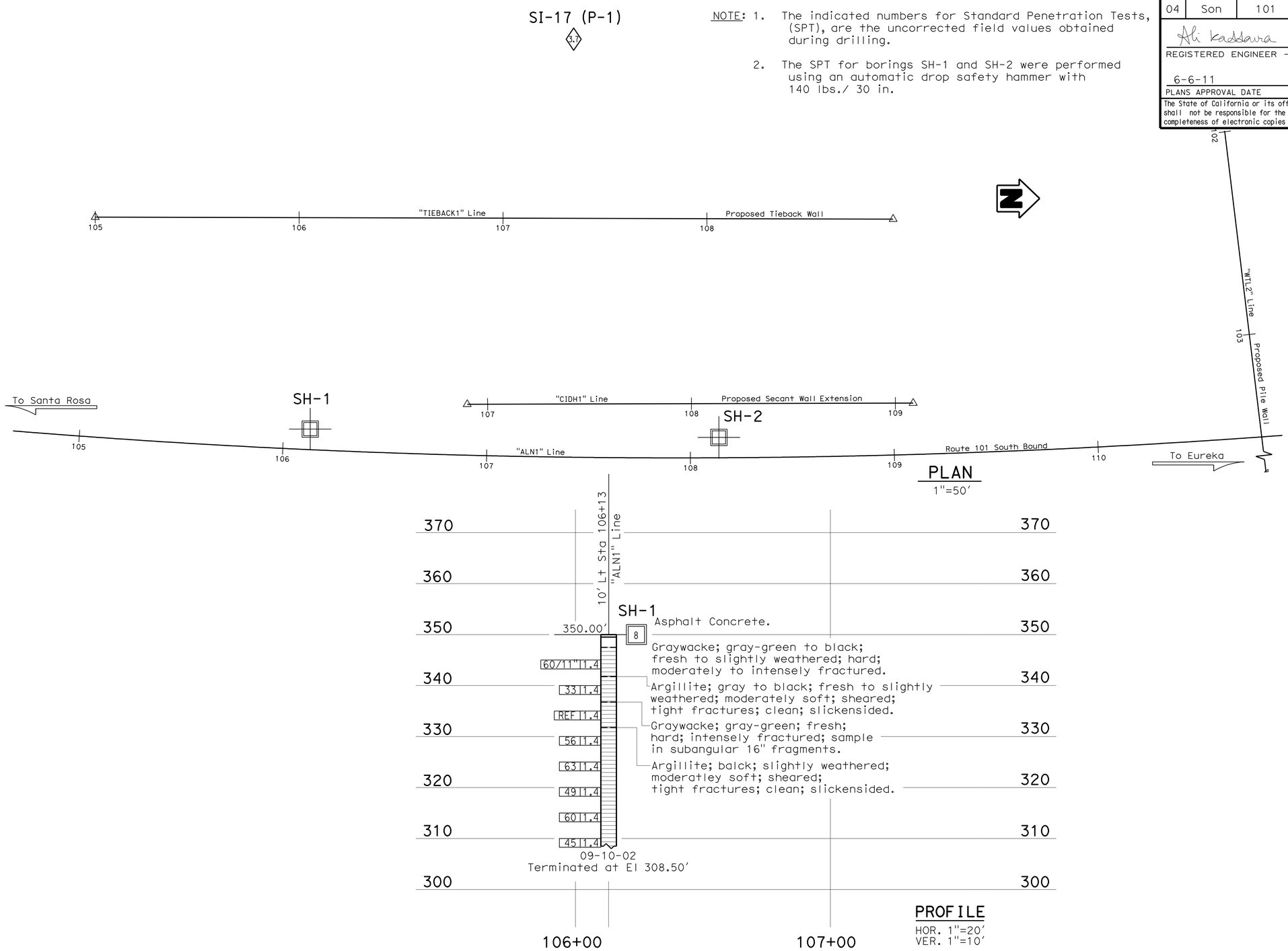

LEGEND OF BORING OPERATIONS

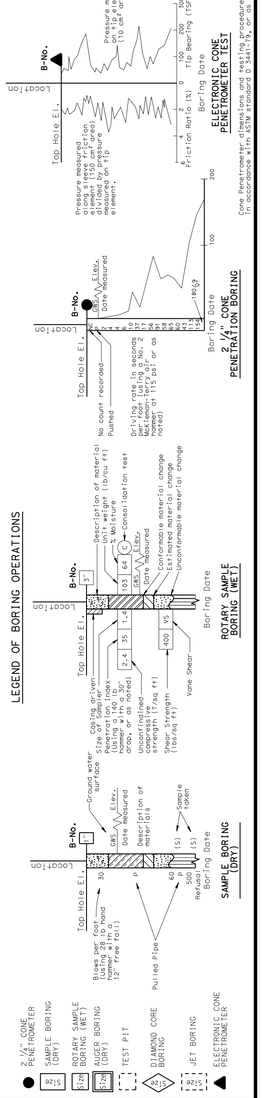

LEGEND OF EARTH MATERIALS

GRAVEL · SAND · SILT · CLAY · SANDY CLAY or CLAYEY SAND · SANDY SILT or SILTY SAND · SILTY CLAY · CLAYEY SILT · PEAT and/or ORGANIC MATTER · FILL MATERIAL · IGNEOUS ROCK · SEDIMENTARY ROCK · METAMORPHIC

CONSISTENCY CLASSIFICATION FOR SOILS

According to the Standard Penetration Test

SPT N-Value (Blows/ Foot)	Granular	SPT N-Value (Blows/ Foot)	Cohesive
0-4	Very Loose	<2	Very Soft
5-10	Loose	2-4	Soft
11-30	Medium Dense	5-8	Medium stiff
31-50	Dense	9-15	Stiff
>50	Very Dense	16-30	Very Stiff
>70	Very Dense	31-60	Hard
		>60	Very Hard

NOTE: Classification of earth material as shown on this sheet is based upon field inspection and is not to be construed to imply mechanical analysis.

ENGINEERING SERVICE CENTER	STRUCTURE FOUNDATIONS
DRAWN BY	M. Reynolds 09/10
CHECKED BY	A. Kaddoura

FIELD INVESTIGATION BY: C. Risden

STATE OF CALIFORNIA DEPARTMENT OF TRANSPORTATION

DIVISION OF ENGINEERING SERVICES OFFICE OF GEOTECHNICAL DESIGN BRANCH

BRIDGE NO. 20E0061
POST MILE 52.1/52.5

SPIRAL CAGED REINFORCED CIDH PILES
LOG OF TEST BORINGS 1 of 3

SHEET 4 OF 6

TL 6052 (CADD 3/24/97)

ORIGINAL SCALE IN INCHES FOR REDUCED PLANS 0 1 2 3

CU 06-244
EA 4S6500

DISREGARD PRINTS BEARING EARLIER REVISION DATES

REVISION DATES (PRELIMINARY STAGE ONLY)

FILE => 20e0061-z-ltb01.dgn

USERNAME => s135318 DATE PLOTTED => 07-JUN-2011 TIME PLOTTED => 10:26

TL 6052 (GND 3/24/97)

CONSISTENCY CLASSIFICATION FOR SOILS

According to the Standard Penetration Test

SPT N-Value (Blows/ foot)	Granular	SPT N-Value (Blows/ foot)	Cohesive
0-4	Very Loose	<2	Very Soft
5-10	Loose	2-4	Soft
11-30	Medium Dense	5-8	Medium stiff
31-50	Dense	9-15	Stiff
>50	Very Dense	16-30	Very Stiff
>70	Very Dense	31-60	Hard
		>60	Very Hard

LEGEND OF EARTH MATERIALS

GRAVEL; SAND; SILT; CLAY; SANDY CLAY or CLAYEY SAND; SANDY SILT or SILTY SAND; SILTY CLAY; CLAYEY SILT; PEAT and/or ORGANIC MATTER; FILL MATERIAL; IGNEOUS ROCK; SEDIMENTARY ROCK; METAMORPHIC

NOTE: Classification of earth material as shown on this sheet is based upon field inspection and is not to be construed to imply mechanical analysis.

LEGEND OF BORING OPERATIONS

2 1/4" CONE PENETROMETER; SAMPLE BORING (DRY); ROTARY SAMPLE BORING (WET); AUGER BORING (DRY); TEST PIT; DIAMOND CORE BORING; JET BORING; ELECTRONIC CONE PENETROMETER

SAMPLE BORING (DRY) — ROTARY SAMPLE BORING (WET) — 2 1/4" CONE PENETRATION BORING — ELECTRONIC CONE PENETROMETER TEST

Cone Penetrometer dimensions and testing procedures are in accordance with ASTM standard D 3441-79, or as noted.

(For Boring Location See Plan, LOTB Sheet 1 of 3)

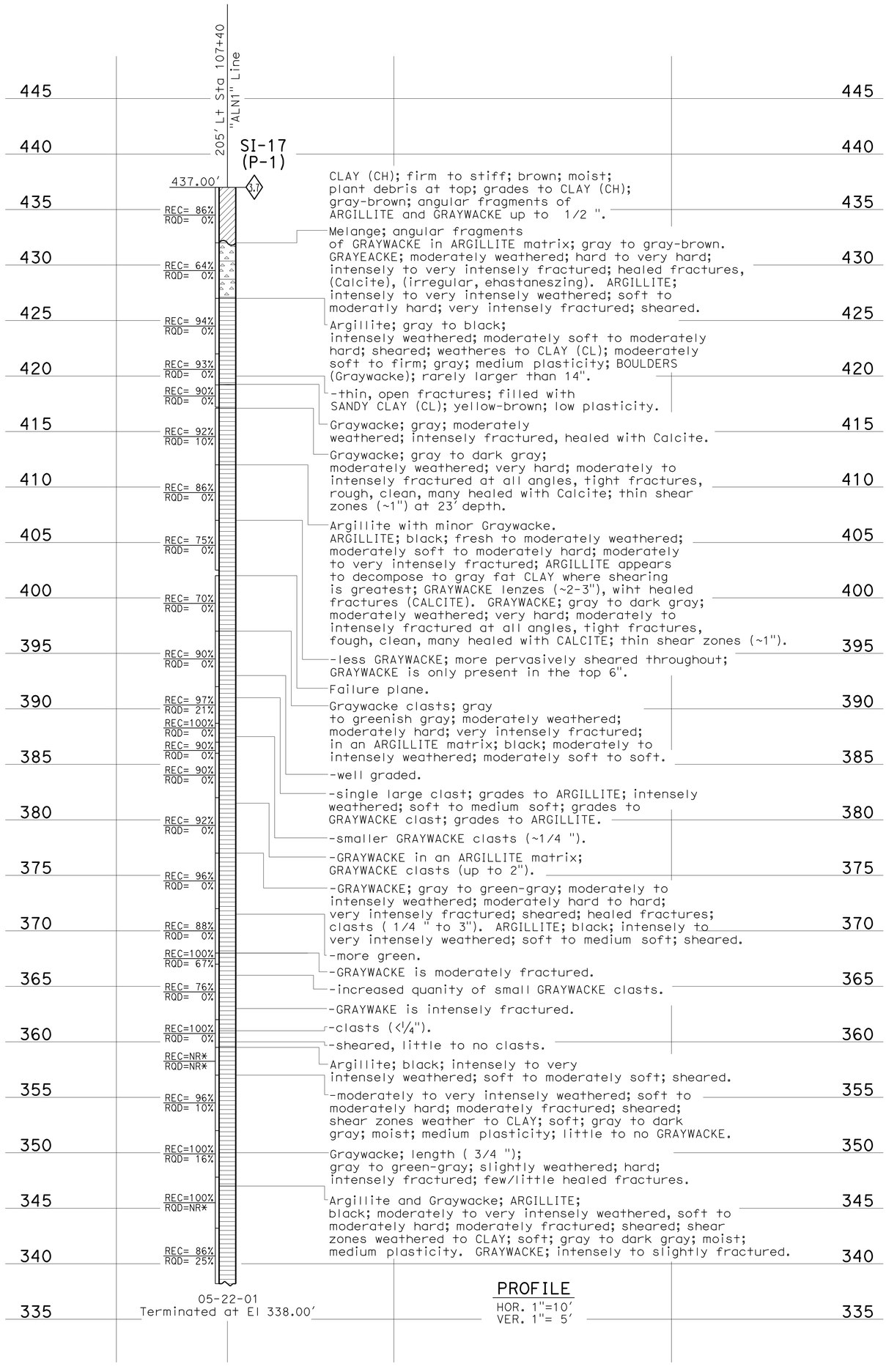

ENGINEERING SERVICE CENTER — STRUCTURE FOUNDATIONS

DRAWN BY: M. Reynolds 09/10
CHECKED BY: A. Kadoura
FIELD INVESTIGATION BY: C. Risden

ORIGINAL SCALE IN INCHES FOR REDUCED PLANS

STATE OF CALIFORNIA
DEPARTMENT OF TRANSPORTATION
DIVISION OF ENGINEERING SERVICES
OFFICE OF GEOTECHNICAL DESIGN BRANCH

CU 06-244
EA 4S6500

BRIDGE NO. 20E0061
POST MILE 52.1/52.5

DISREGARD PRINTS BEARING EARLIER REVISION DATES

SPIRAL CAGED REINFORCED CIDH PILES

LOG OF TEST BORINGS 2 of 3

REVISION DATES (PRELIMINARY STAGE ONLY)

SHEET 5 OF 6

FILE => 20E0061-Z-1TB02.dgn

Ali Kadoura
REGISTERED ENGINEER - CIVIL
11-04-10

6-6-11
PLANS APPROVAL DATE

REGISTERED PROFESSIONAL ENGINEER — Ali K. Kadoura — No. 55710 — Exp. 12-31-12 — CIVIL — STATE OF CALIFORNIA

The State of California or its officers or agents shall not be responsible for the accuracy or completeness of electronic copies of this plan sheet.

DIST.	COUNTY	ROUTE	POST MILES TOTAL PROJECT	SHEET NO.	TOTAL SHEETS
04	Son	101	R52.1/R52.5	23	41

USERNAME => s135318 DATE PLOTTED => 07-JUN-2011 TIME PLOTTED => 10:27

DIST.	COUNTY	ROUTE	POST MILES TOTAL PROJECT	SHEET NO.	TOTAL SHEETS
04	Son	101	R52.1/R52.5	24	41

Ali Kaddoura 11-04-10
REGISTERED ENGINEER - CIVIL

6-6-11
PLANS APPROVAL DATE

REGISTERED PROFESSIONAL ENGINEER
Ali K. Kaddoura
No. 55710
Exp. 12-31-12
CIVIL
STATE OF CALIFORNIA

The State of California or its officers or agents shall not be responsible for the accuracy or completeness of electronic copies of this plan sheet.

NOTE: 1. The indicated numbers for Standard Penetration Tests, (SPT), are the uncorrected field values obtained during drilling.

2. The SPT for borings SH-1 and SH-2 were performed using an automatic drop safety hammer with 140 lbs./ 30 in.

(For Boring Location See Plan, LOTB Sheet 1 of 3)

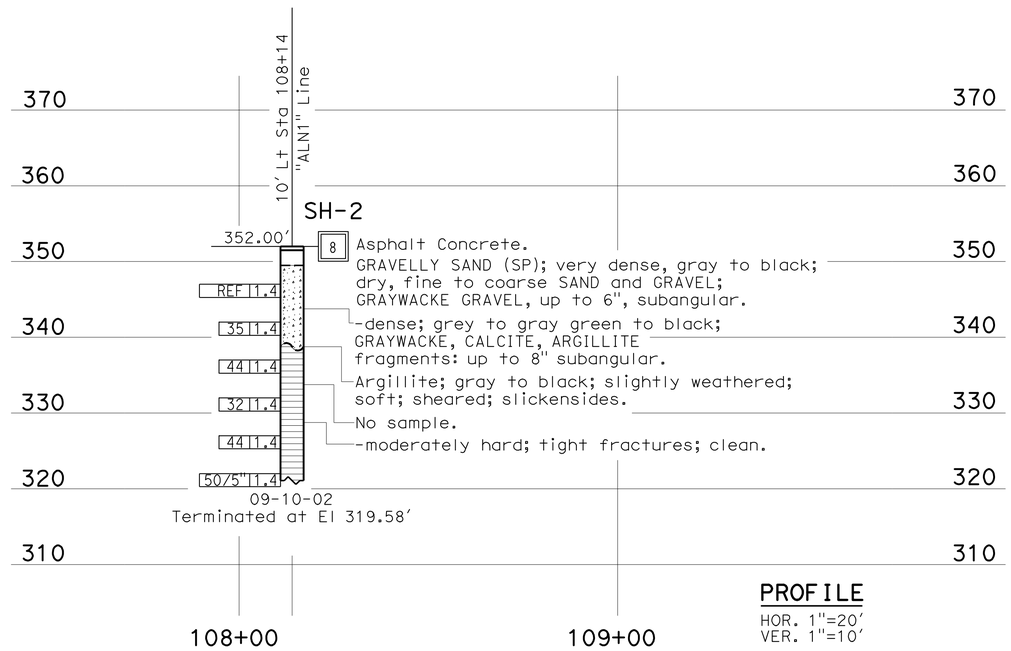

PROFILE
HOR. 1"=20'
VER. 1"=10'

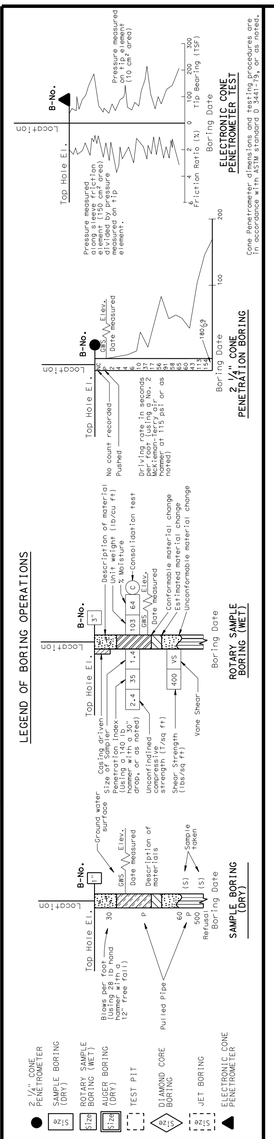

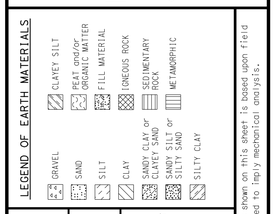

CONSISTENCY CLASSIFICATION FOR SOILS
According to the Standard Penetration Test

SPT N-Value (Blows/ Foot)	Granular	SPT N-Value (Blows/ Foot)	Cohesive
0-4	Very Loose	<2	Very Soft
5-10	Loose	2-4	Soft
11-30	Medium Dense	5-8	Medium stiff
31-50	Dense	9-15	Stiff
>50	Very Dense	16-30	Very Stiff
>70	Very Dense	31-60	Hard
		>60	Very Hard

NOTE: Classification of earth material as shown on this sheet is based upon field inspection and is not to be construed to imply mechanical analysis.

ENGINEERING SERVICE CENTER	STRUCTURE FOUNDATIONS
DRAWN BY	M. Reynolds 09/10
CHECKED BY	A. Kaddoura

FIELD INVESTIGATION BY: C. Risden

STATE OF CALIFORNIA DEPARTMENT OF TRANSPORTATION

DIVISION OF ENGINEERING SERVICES OFFICE OF GEOTECHNICAL DESIGN BRANCH

BRIDGE NO. 20E0061
POST MILE 52.1/52.5

SPIRAL CAGED REINFORCED CIDH PILES
LOG OF TEST BORINGS 3 of 3

SHEET 6 OF 6

TL 6052 (CADD 3/24/97)

ORIGINAL SCALE IN INCHES FOR REDUCED PLANS 0 1 2 3

CU06-244
EA4S6500

DISREGARD PRINTS BEARING EARLIER REVISION DATES

REVISION DATES (PRELIMINARY STAGE ONLY)

FILE => 20e0061-z-ltb03.dgn

USERNAME => s135318 DATE PLOTTED => 07-JUN-2011 TIME PLOTTED => 10:27

DIST	COUNTY	ROUTE	POST MILES TOTAL PROJECT	SHEET No.	TOTAL SHEETS
04	Son	101	R52.1/R52.5	25	41

REGISTERED CIVIL ENGINEER — DATE 2-8-11

6-6-11
PLANS APPROVAL DATE

REGISTERED PROFESSIONAL ENGINEER — ISAIAS D. YALAN — No. 68269 — Exp. 9-30-2011 — CIVIL — STATE OF CALIFORNIA

The State of California or its officers or agents shall not be responsible for the accuracy or completeness of electronic copies of this plan sheet.

QUANTITIES

STRUCTURE EXCAVATION (SOLDIER PILE WALL)	81	CY
CONCRETE BACKFILL (SOLDIER PILE WALL)	401	CY
36" DRILLED HOLE	1,530	LF
STEEL SOLDIER PILE (W 24 X 229)	1,640	LF
TIMBER LAGGING	5.3	MFBM
CLEAN SOLDIER PILE (EXISTING WALL)	LUMP	SUM
PAINT SOLDIER PILE (EXISTING WALL)	LUMP	SUM
CLEAN AND PAINT STEEL SOLDIER PILE	LUMP	SUM

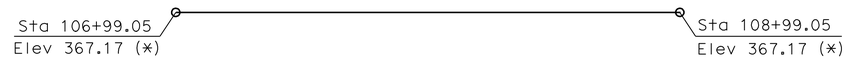

TOP OF WALL PROFILE

1" = 30'

(*) Exact elevation of top of pile to be determined in the field

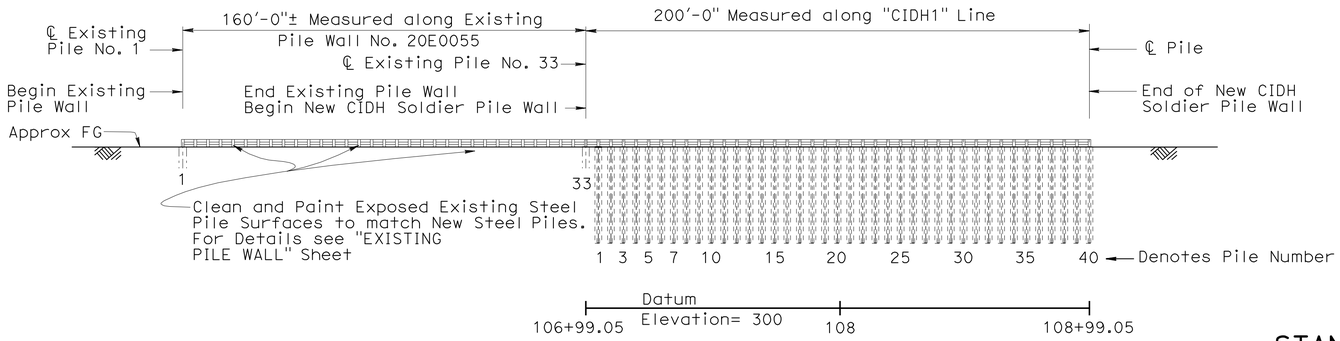

ELEVATION

1" = 30'

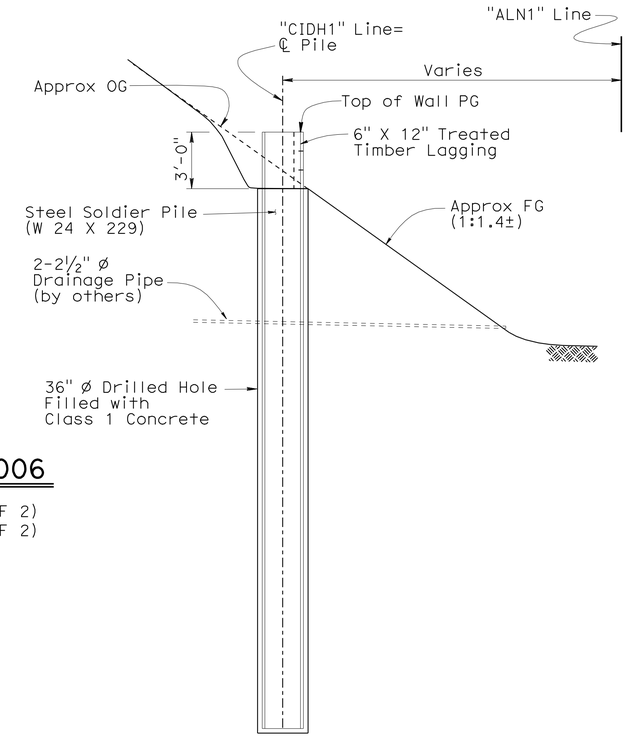

TYPICAL SECTION

¼" = 1'-0"

STANDARD PLANS DATED MAY 2006

A10A	ACRONYMS AND ABBREVIATIONS (SHEET 1 OF 2)
A10B	ACRONYMS AND ABBREVIATIONS (SHEET 2 OF 2)
A10C	SYMBOLS (SHEET 1 OF 2)
A10D	SYMBOLS (SHEET 2 OF 2)

STANDARD PLAN SHEET No.

DETAIL No.

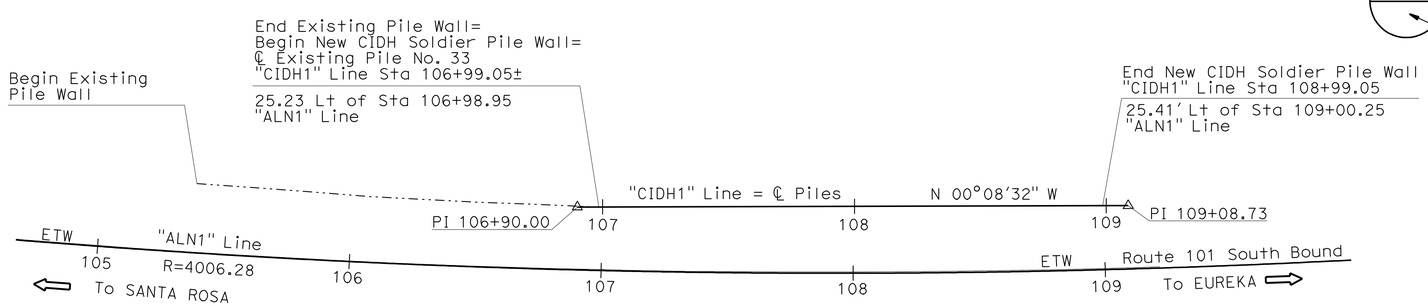

PLAN

1" = 30'

Note:
For "GENERAL NOTES" see "STRUCTURE PLAN" sheet

INDEX TO PLANS

1 GENERAL PLAN
2 STRUCTURE PLAN
3 FOUNDATION PLAN
4 TYPICAL SECTION
5 EXISTING PILE WALL
6 LOG OF TEST BORINGS 1 OF 3
7 LOG OF TEST BORINGS 2 OF 3
8 LOG OF TEST BORINGS 3 OF 3

NOTE:
THE CONTRACTOR SHALL VERIFY ALL CONTROLLING FIELD DIMENSIONS BEFORE ORDERING OR FABRICATING ANY MATERIAL.

Gordon Danke, DESIGN ENGINEER	DESIGN	BY Isaias Yalan	CHECKED Nasser Tachta	LOAD & RESISTANCE FACTOR DESIGN	
	DETAILS	BY Rania Heider	CHECKED Nasser Tachta	LAYOUT: BY Isaias Yalan	CHECKED Nasser Tachta
	QUANTITIES	BY Isaias Yalan	CHECKED Nasser Tachta	SPECIFICATIONS: BY C. Siegenthaler	PLANS AND SPECS COMPARED C. Siegenthaler

ORIGINAL SCALE IN INCHES FOR REDUCED PLANS 0 1 2 3

STATE OF CALIFORNIA
DEPARTMENT OF TRANSPORTATION

DIVISION OF ENGINEERING SERVICES
STRUCTURE DESIGN
DESIGN BRANCH 9

BRIDGE NO. 20E0062
POST MILE 52.1/52.5

SEGMENTED CIDH SOLDIER PILE WALL
GENERAL PLAN

UNIT: 3594
PROJECT NUMBER & PHASE: 04 0000 1255-1 CONTRACT NO.: 04-4S6501

DISREGARD PRINTS BEARING EARLIER REVISION DATES — REVISION DATES 7-28-10 12-29-10 1-07-11

SHEET 1 OF 8

USERNAME => trmikest DATE PLOTTED => 08-JUN-2011 TIME PLOTTED => 08:33

STRUCTURES DESIGN GENERAL PLAN SHEET (ENGLISH) (REV.09-01-10)

FILE => 20e0062-a-gp.dgn

DIST	COUNTY	ROUTE	POST MILES TOTAL PROJECT	SHEET No.	TOTAL SHEETS
04	Son	101	R52.1/R52.5	26	41

REGISTERED CIVIL ENGINEER 2-8-11 DATE

6-6-11
PLANS APPROVAL DATE

REGISTERED PROFESSIONAL ENGINEER ISAIAS D. YALAN No. 68269 Exp. 9-30-2011 CIVIL STATE OF CALIFORNIA

The State of California or its officers or agents shall not be responsible for the accuracy or completeness of electronic copies of this plan sheet.

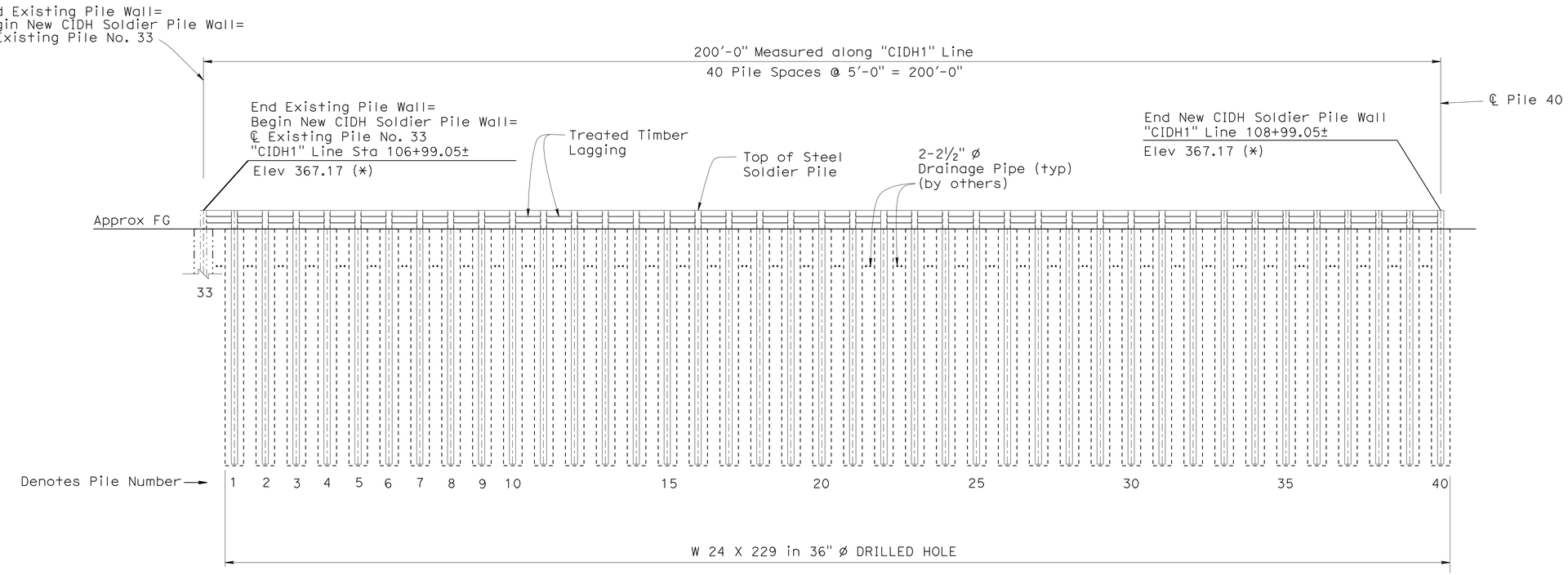

ELEVATION

1" = 10'

(*) Exact elevation of top of pile to be determined in the field

NOTES:

1. For details not shown see "TYPICAL SECTION" sheet.
2. Drilling for a soldier pile shall not be performed until the adjacent pile or piles are complete and the concrete has reached a compressive strength of 3200 psi.

NOTE:
THE CONTRACTOR SHALL VERIFY ALL CONTROLLING FIELD DIMENSIONS BEFORE ORDERING OR FABRICATING ANY MATERIAL.

GENERAL NOTES:

DESIGN: BRIDGE DESIGN SPECIFICATIONS - April 2000 (LFD) (1996 Sixteenth Edition AASHTO with Interims and Revisions by CALTRANS)

SOIL PARAMETERS:

Active Pressure:
Between 0 feet (Top of embankment buttress slope =FG) and 15 feet depth (OG at roadway level - Dredge Line)

$\phi = 25°$ $\gamma = 130$ pcf
S = 30%
C = 0 psf

Passive Pressure:
a) Between OG at roadway level and 10 feet below OG
$\phi = 38°$ $\gamma = 135$ pcf
C= 0 psf
b) Between the depth of 10 feet and 40 feet below OG
$\phi = 15°$ $\gamma = 135$ pcf
C = 4000 psf

REINFORCED CONCRETE:

f_y= 60 ksi (Yield strength of reinforcement)
f'_c= 4 ksi (Concrete compressive strength at 28 days)
n = 8

STRUCTURAL STEEL: Steel Piles - ASTM Designation: A709/A709M, Grade 50 (345) or A572/A572M,

STRUCTURAL TIMBER: Treated Douglas Fir - Grade No. 1 or better
Timber to be full sawn

	BY	CHECKED
DESIGN	Isaias Yalan	Nasser Tachta
DETAILS	Rania Heider	Nasser Tachta
QUANTITIES	Isaias Yalan	Nasser Tachta

STATE OF CALIFORNIA
DEPARTMENT OF TRANSPORTATION

DIVISION OF ENGINEERING SERVICES
STRUCTURE DESIGN
DESIGN BRANCH 9

BRIDGE NO. 20E0062
POST MILE 52.1/52.5

SEGMENTED CIDH SOLDIER PILE WALL
STRUCTURE PLAN

STRUCTURES DESIGN DETAIL SHEET (ENGLISH) (REV. 09-01-10)

ORIGINAL SCALE IN INCHES FOR REDUCED PLANS 0 1 2 3

UNIT: 3594
PROJECT NUMBER & PHASE: 04 0000 1255-1 CONTRACT NO.: 04-4S6501

DISREGARD PRINTS BEARING EARLIER REVISION DATES

REVISION DATES: 8-02-10 11-01-10 1-07-11

SHEET 2 OF 8

FILE => 20e0062-c-sp.dgn

USERNAME => trmikesi DATE PLOTTED => 08-JUN-2011 TIME PLOTTED => 08:33

DIST	COUNTY	ROUTE	POST MILES TOTAL PROJECT	SHEET No.	TOTAL SHEETS
04	Son	101	R52.1/R52.5	27	41

REGISTERED CIVIL ENGINEER 2-8-11 DATE

6-6-11
PLANS APPROVAL DATE

REGISTERED PROFESSIONAL ENGINEER
ISAIAS D. YALAN
No. 68269
Exp. 9-30-2011
CIVIL
STATE OF CALIFORNIA

The State of California or its officers or agents shall not be responsible for the accuracy or completeness of electronic copies of this plan sheet.

CURVE DATA

No.	R	Δ	T	L
(A)	4006.28	27°30'47"	980.81	1923.78

SURVEY CONTROL

PM96 (Not Shown On Plan)
Fnd 1" IP w/ CalTrans PP
212.70 Ft Rt "ALN1" Line, Rte 101
Sta 107+48.79
N 417,824.40
E 1,712,187.68
Elev= 358.69

PM97 (Not Shown On Plan)
Fnd 1" IP w/ CalTrans PP
194.14 Ft Rt "ALN1" Line, Rte 101
Sta 111+10.63
N 418,203.63
E 1,712,156.19
Elev= 367.01

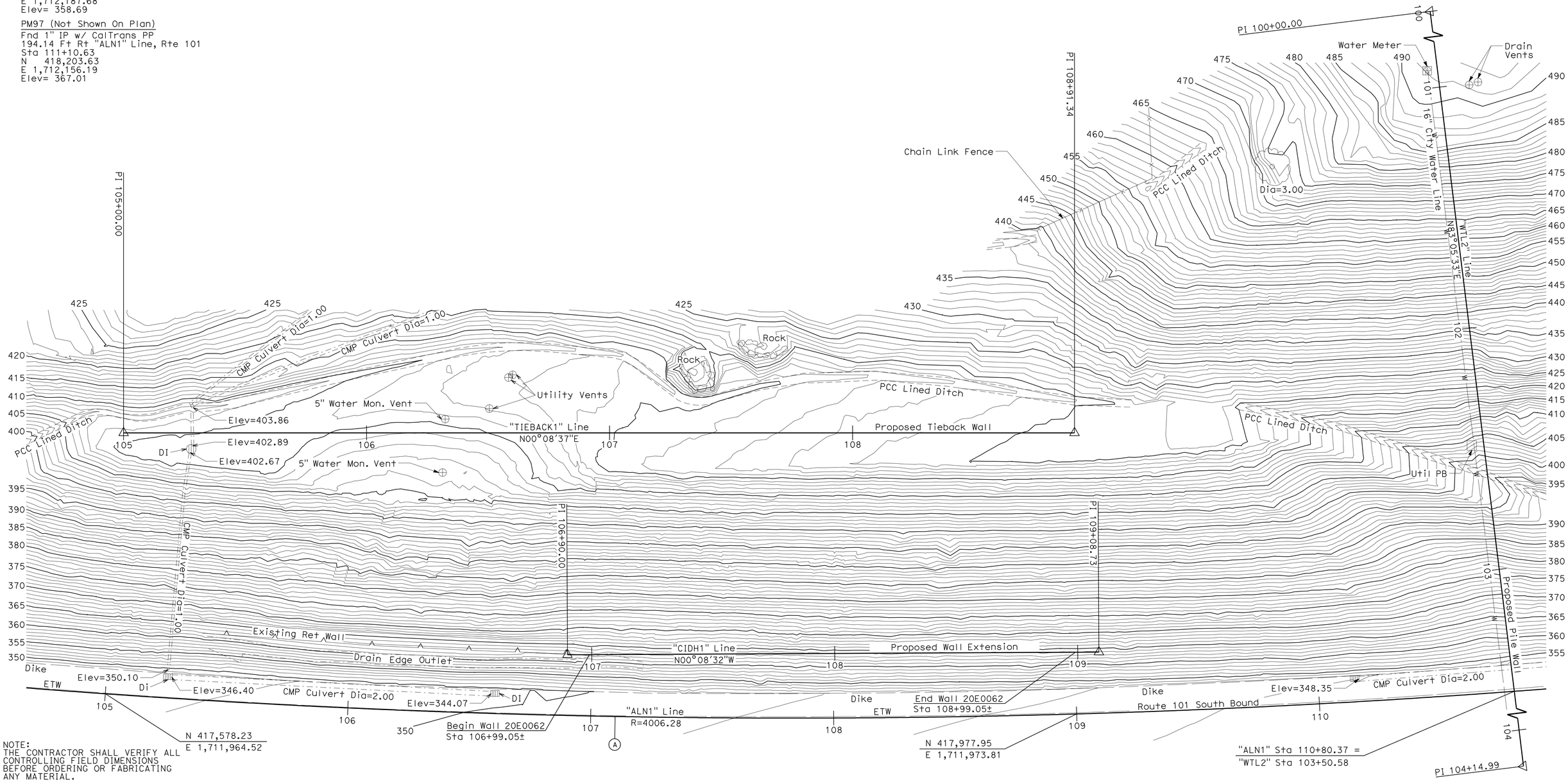

NOTE:
THE CONTRACTOR SHALL VERIFY ALL CONTROLLING FIELD DIMENSIONS BEFORE ORDERING OR FABRICATING ANY MATERIAL.

PRELIMINARY INVESTIGATION SECTION

SCALE	VERT.DATUM NGVD29	PHOTOGRAMMETRY AS OF: X					
1"=20'	HORZ.DATUM NAD27	SURVEYED	BY District	12/2009	CHECKED	BY J.Borden	07/2010
ALIGNMENT TIES Dist. Traverse Sheet		DRAFTED	BY J.Martinez	07/2010	CHECKED	BY S.Sou	07/2010

DESIGN	BY Isaias Yalan	CHECKED Nassar Tachta
DETAILS	BY Tim Fairall	CHECKED Nassar Tachta
QUANTITIES	BY Isaias Yalan	CHECKED Nassar Tachta

STATE OF CALIFORNIA
DEPARTMENT OF TRANSPORTATION

DIVISION OF ENGINEERING SERVICES
STRUCTURE DESIGN
DESIGN BRANCH 9

BRIDGE NO. 20E0062
POST MILE 52.1/52.5

SEGMENTED CIDH SOLDIER PILE WALL
FOUNDATION PLAN

STRUCTURES FOUNDATION PLAN SHEET (ENGLISH) (REV. 09-01-10)

ORIGINAL SCALE IN INCHES FOR REDUCED PLANS 0 1 2 3

UNIT: 3594
PROJECT NUMBER & PHASE: 0400001255 1
CONTRACT NO.: 04-4S6501

DISREGARD PRINTS BEARING EARLIER REVISION DATES

REVISION DATES 01/03/11 02/04/11 02/07/11

SHEET 3 OF 8

FILE => 20e0062-e-fpl01.dgn

DIST	COUNTY	ROUTE	POST MILES TOTAL PROJECT	SHEET No.	TOTAL SHEETS
04	Son	101	R52.1/R52.5	28	41

REGISTERED CIVIL ENGINEER — DATE 2-8-11

6-6-11
PLANS APPROVAL DATE

REGISTERED PROFESSIONAL ENGINEER — ISAIAS D. YALAN — No. 68269 — Exp. 9-30-2011 — CIVIL — STATE OF CALIFORNIA

The State of California or its officers or agents shall not be responsible for the accuracy or completeness of electronic copies of this plan sheet.

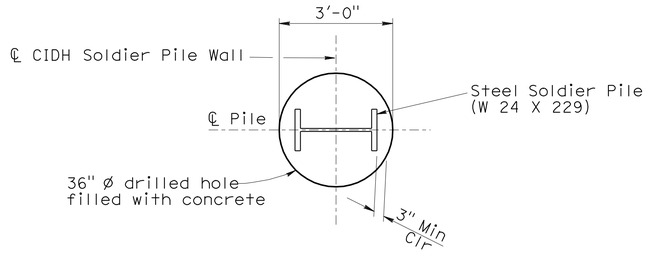

SECTION A-A
½" = 1'-0"

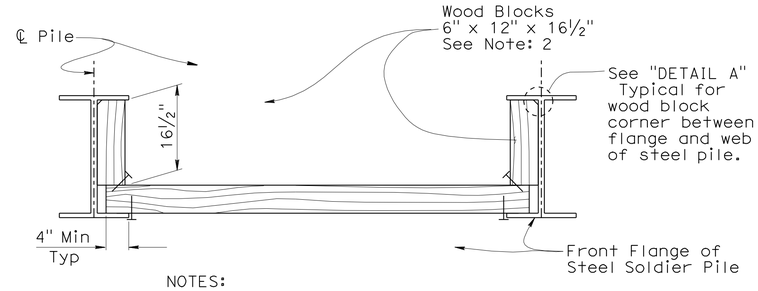

NOTES:

1. No clipping of corners allowed except as noted.
2. Retain with ¼"ø x 5" Galv spikes. Total 4 per lagging member, 2 per side Typ.

SECTION E-E
NO SCALE

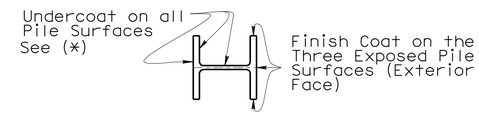

LIMITS OF CLEAN & PAINT STEEL SOLDIER PILE
NO SCALE

(*) NOTE:
Undercoat entire length of steel soldier pile = 41'-0" All Surfaces

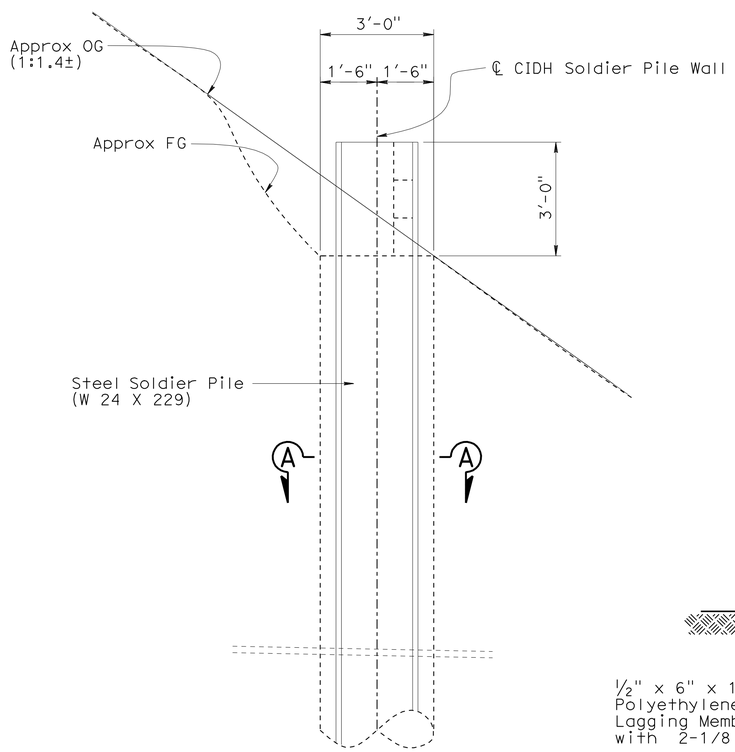

PART ELEVATION
½" = 1'-0"

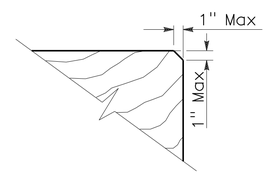

DETAIL A
1½" = 1'

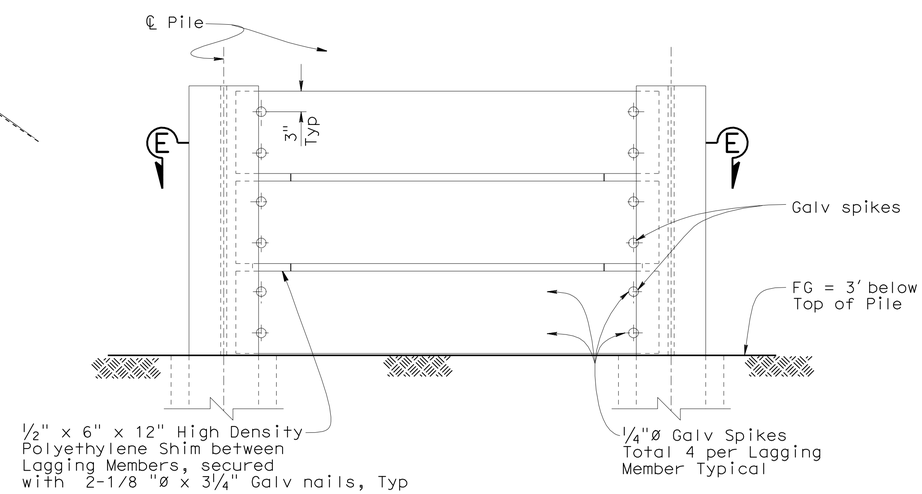

LAGGING PART ELEVATION
NO SCALE

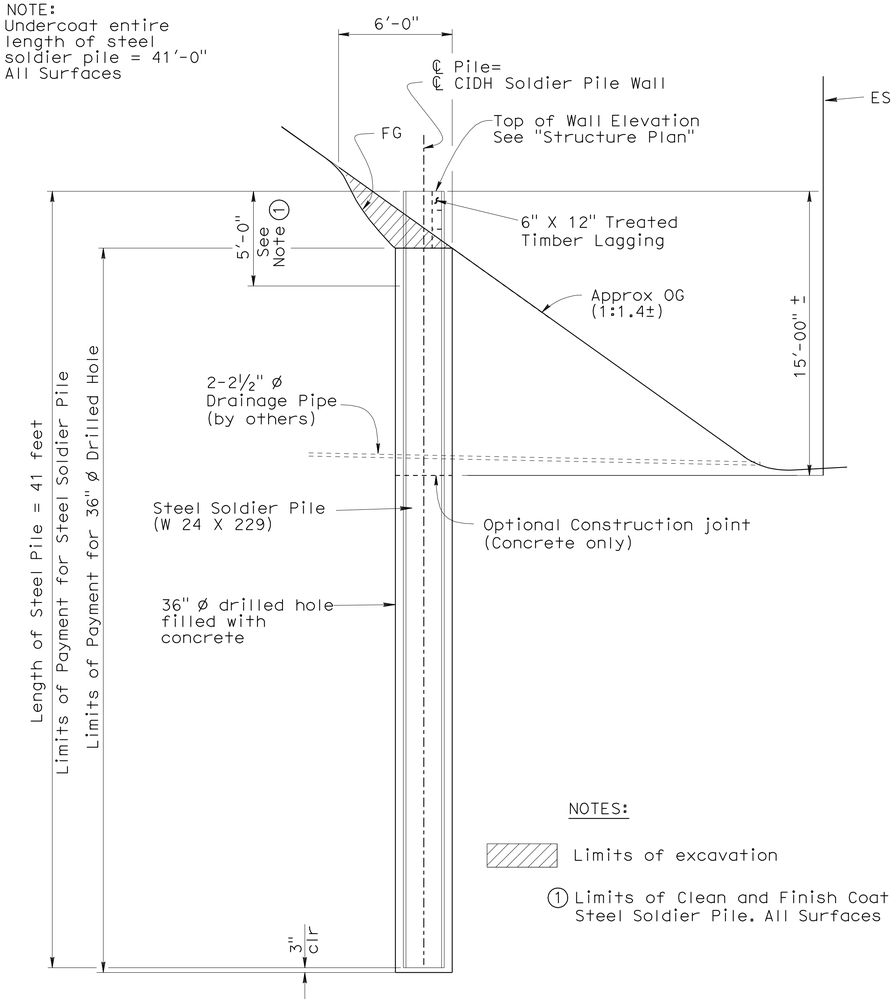

NOTES:

Limits of excavation

1 Limits of Clean and Finish Coat Steel Soldier Pile. All Surfaces

TYPICAL SECTION
¼" = 1'-0"

DESIGN	BY Isaias Yalan	CHECKED Nasser Tachta	
DETAILS	BY Rania Heider	CHECKED Nasser Tachta	
QUANTITIES	BY Isaias Yalan	CHECKED Nasser Tachta	

STATE OF CALIFORNIA
DEPARTMENT OF TRANSPORTATION

DIVISION OF ENGINEERING SERVICES
STRUCTURE DESIGN
DESIGN BRANCH 9

BRIDGE NO. 20E0062
POST MILE 52.1/52.5

SEGMENTED CIDH SOLDIER PILE WALL
TYPICAL SECTION

STRUCTURES DESIGN DETAIL SHEET (ENGLISH) (REV. 09-01-10)

ORIGINAL SCALE IN INCHES FOR REDUCED PLANS 0 1 2 3

UNIT: 3594
PROJECT NUMBER & PHASE: 04 0000 1255-1 CONTRACT NO.: 04-4S6501

DISREGARD PRINTS BEARING EARLIER REVISION DATES

REVISION DATES: 8-31-10 9-24-10 11-04-10 1-10-11

SHEET 4 OF 8

FILE => 20e0062-k-ts01.dgn

USERNAME => trmikel DATE PLOTTED => 08-JUN-2011 TIME PLOTTED => 08:34

DIST	COUNTY	ROUTE	POST MILES TOTAL PROJECT	SHEET No.	TOTAL SHEETS
04	Son	101	R52.1/R52.5	29	41

REGISTERED CIVIL ENGINEER 2-8-11 DATE

6-6-11
PLANS APPROVAL DATE

REGISTERED PROFESSIONAL ENGINEER
ISAIAS D. YALAN
No. 68269
Exp. 9-30-2011
CIVIL
STATE OF CALIFORNIA

The State of California or its officers or agents shall not be responsible for the accuracy or completeness of electronic copies of this plan sheet.

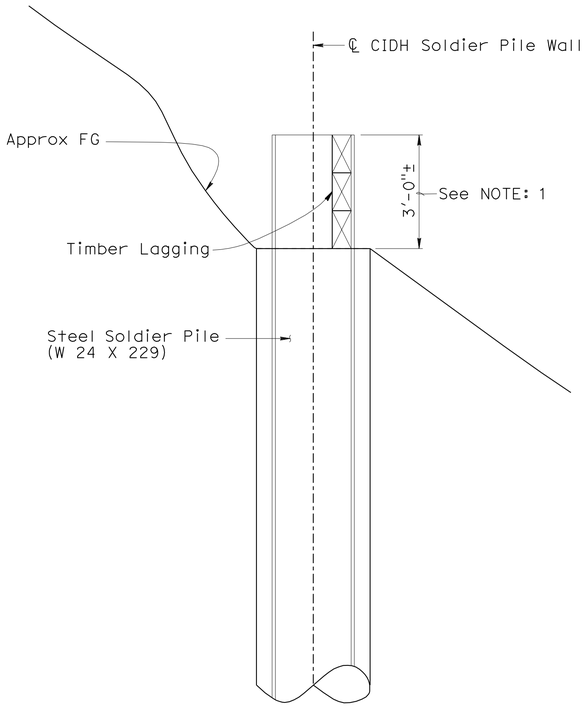

PART ELEVATION
½" = 1'-0"

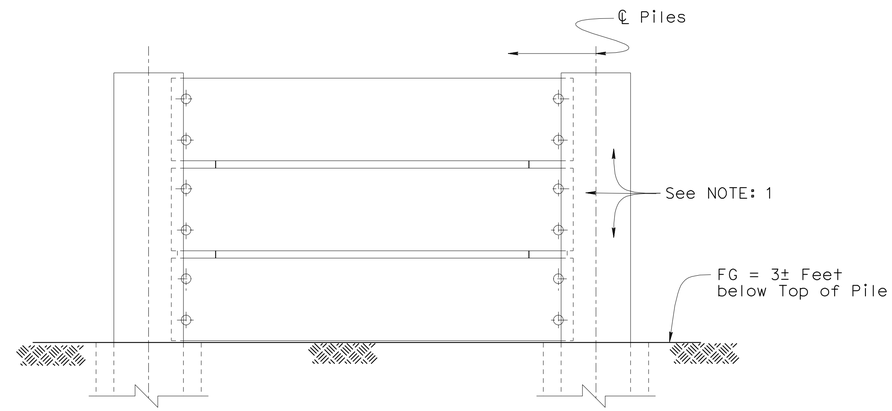

PART ELEVATION
NO SCALE

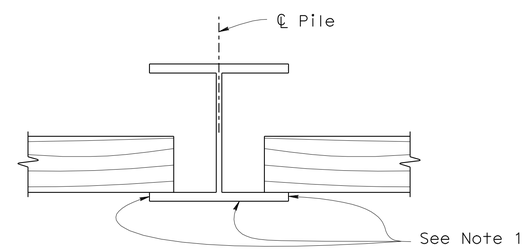

PAINTING

LIMITS OF PAYMENT
NO SCALE

NOTE:
1. Spot blast clean, undercoat and finish coat steel soldier piles 3 surfaces in the upper exposed pile (33 existing piles).

DESIGN	BY Isaias Yalan	CHECKED Nasser Tachta	
DETAILS	BY Tim Fairall	CHECKED Nasser Tachta	
QUANTITIES	BY Isaias Yalan	CHECKED Nasser Tachta	

STATE OF CALIFORNIA
DEPARTMENT OF TRANSPORTATION

DIVISION OF ENGINEERING SERVICES
STRUCTURE DESIGN
DESIGN BRANCH 9

BRIDGE NO. 20E0062
POST MILE 52.1/52.5

SEGMENTED CIDH SOLDIER PILE WALL
EXISTING PILE WALL

STRUCTURES DESIGN DETAIL SHEET (ENGLISH) (REV. 09-01-10)

ORIGINAL SCALE IN INCHES FOR REDUCED PLANS 0 1 2 3

UNIT: 3594
PROJECT NUMBER & PHASE: 04 0000 1255-1 CONTRACT NO.: 04-4S6501

DISREGARD PRINTS BEARING EARLIER REVISION DATES

REVISION DATES: 8-31-10 8-31-10 11-01-10 1-11-11

SHEET 5 OF 8

FILE => 20e0062-k-ts02.dgn

USERNAME => tfmikesi DATE PLOTTED => 08-JUN-2011 TIME PLOTTED => 08:34

DIST.	COUNTY	ROUTE	POST MILES TOTAL PROJECT	SHEET NO.	TOTAL SHEETS
04	Son	101	R52.1/R52.5	30	41

Ali Kaddoura 11-04-10
REGISTERED ENGINEER - CIVIL

6-6-11
PLANS APPROVAL DATE

REGISTERED PROFESSIONAL ENGINEER Ali K. Kaddoura No. 55710 Exp. 12-31-12 CIVIL STATE OF CALIFORNIA

The State of California or its officers or agents shall not be responsible for the accuracy or completeness of electronic copies of this plan sheet.

LEGEND OF BORING OPERATIONS

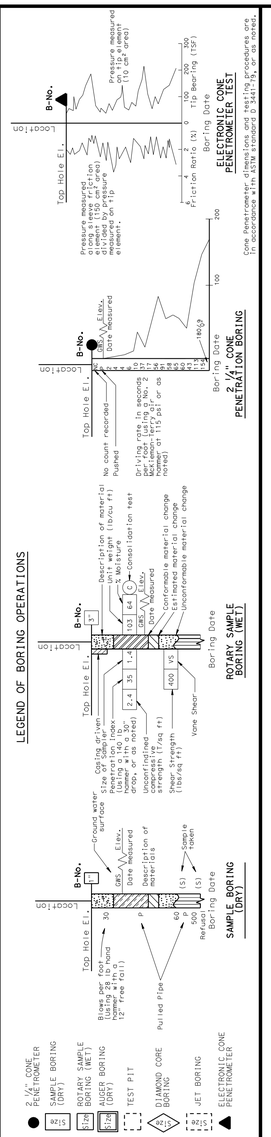

LEGEND OF EARTH MATERIALS

GRAVEL · SAND · SILT · CLAY · SANDY CLAY or CLAYEY SAND · SANDY SILT or SILTY SAND · SILTY CLAY · CLAYEY SILT · PEAT and/or ORGANIC MATTER · FILL MATERIAL · IGNEOUS ROCK · SEDIMENTARY ROCK · METAMORPHIC

CONSISTENCY CLASSIFICATION FOR SOILS

According to the Standard Penetration Test

SPT N-Value (Blows/ Foot)	Granular	SPT N-Value (Blows/ Foot)	Cohesive
0-4	Very Loose	<2	Very Soft
5-10	Loose	2-4	Soft
11-30	Medium Dense	5-8	Medium stiff
31-50	Dense	9-15	Stiff
>50	Very Dense	16-30	Very Stiff
>70	Very Dense	31-60	Hard
		>60	Very Hard

NOTE: Classification of earth material as shown on this sheet is based upon field inspection and is not to be construed to imply mechanical analysis.

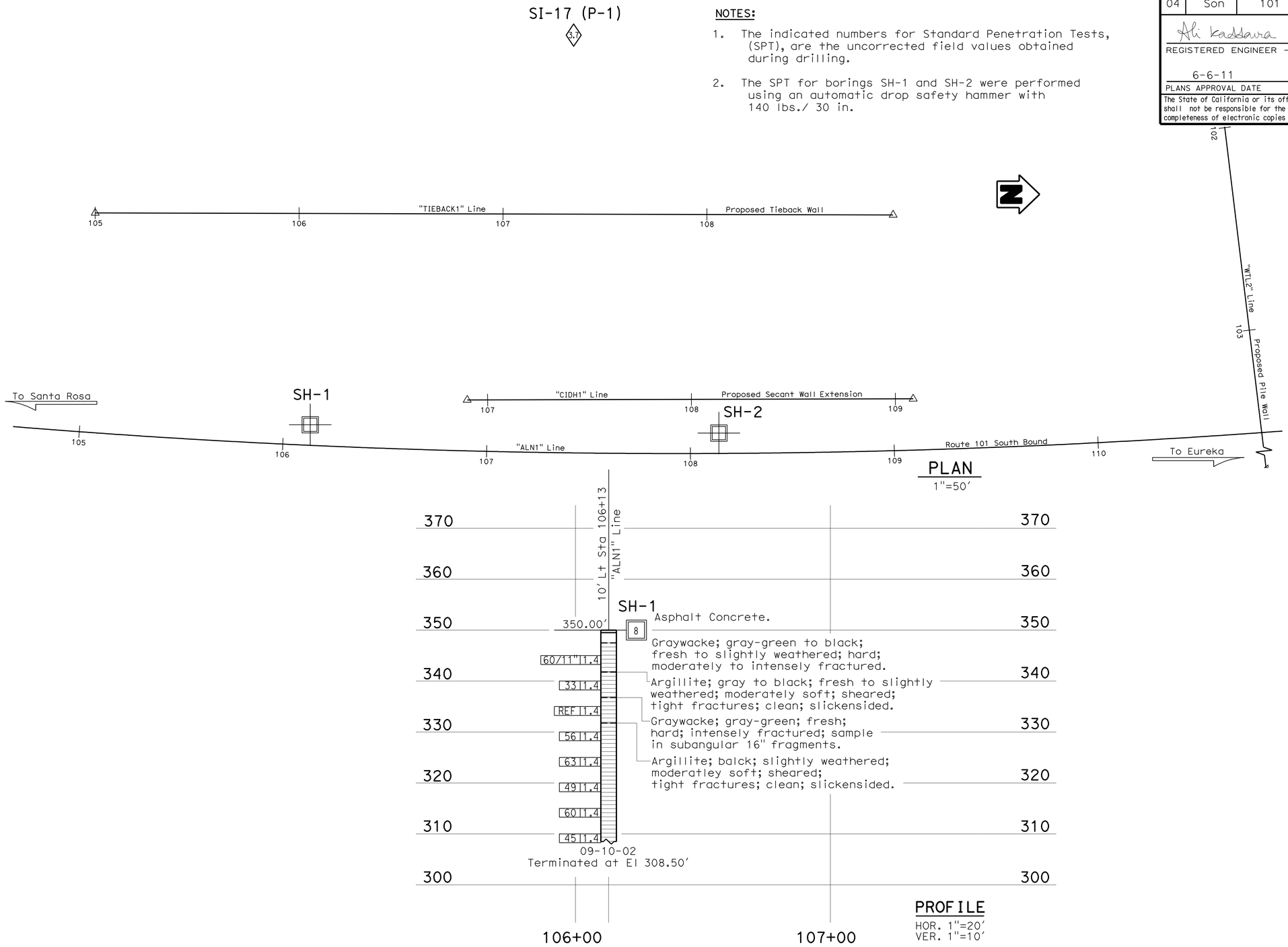

ENGINEERING SERVICE CENTER	STRUCTURE FOUNDATIONS
DRAWN BY	M. Reynolds 09/10
CHECKED BY	A. Kaddoura

FIELD INVESTIGATION BY: C. Risden

STATE OF CALIFORNIA DEPARTMENT OF TRANSPORTATION

DIVISION OF ENGINEERING SERVICES OFFICE OF GEOTECHNICAL DESIGN BRANCH

BRIDGE NO. 20E0062
POST MILE 52.1/52.5

SEGMENTED CIDH SOLDIER PILE WALL
LOG OF TEST BORINGS 1 of 3

TL 6052 (CADD 3/24/97)

ORIGINAL SCALE IN INCHES FOR REDUCED PLANS 0 1 2 3

CU 06-244
EA 4S6500

DISREGARD PRINTS BEARING EARLIER REVISION DATES

REVISION DATES (PRELIMINARY STAGE ONLY)

SHEET 6 OF 8

FILE => 20e0062-z-ltb01.dgn

USERNAME => trmikest DATE PLOTTED => 08-JUN-2011 TIME PLOTTED => 08:34

TL 6052 (CADD 3/24/97)

CONSISTENCY CLASSIFICATION FOR SOILS

According to the Standard Penetration Test

SPT N-Value (Blows/foot)	Granular	SPT N-Value (Blows/foot)	Cohesive
0-4	Very Loose	<2	Very Soft
5-10	Loose	2-4	Soft
11-30	Medium Dense	5-8	Medium stiff
31-50	Dense	9-15	Stiff
>50	Very Dense	16-30	Very Stiff
>70	Very Dense	31-60	Hard
		>60	Very Hard

LEGEND OF EARTH MATERIALS

GRAVEL; SAND; SILT; CLAY; SANDY CLAY or CLAYEY SAND; SANDY SILT or SILTY SAND; SILTY CLAY; CLAYEY SILT; PEAT and/or ORGANIC MATTER; FILL MATERIAL; IGNEOUS ROCK; SEDIMENTARY ROCK; METAMORPHIC

NOTE: Classification of earth material as shown on this sheet is based upon field inspection and is not to be construed to imply mechanical analysis.

LEGEND OF BORING OPERATIONS

2 1/4" CONE PENETROMETER; SAMPLE BORING (DRY); ROTARY SAMPLE BORING (WET); AUGER BORING (DRY); TEST PIT; DIAMOND CORE BORING; JET BORING; ELECTRONIC CONE PENETROMETER

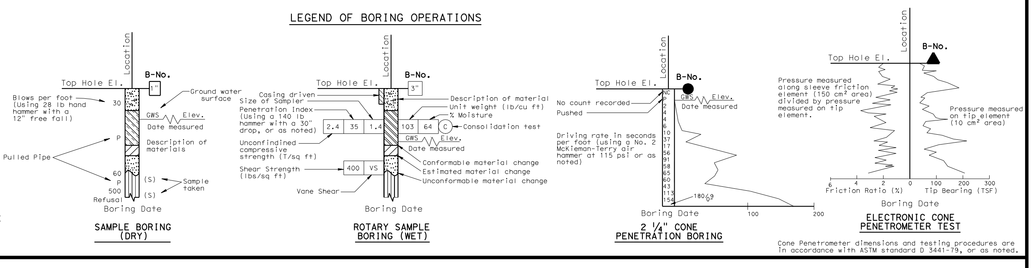

Cone Penetrometer dimensions and testing procedures are in accordance with ASTM standard D 3441-79, or as noted.

(For Boring Location See Plan, LOTB Sheet 1 of 3)

205' Lt Sta 107+40 "ALN1" Line

SI-17 (P-1)

437.00'

Elev.	REC	RQD	Description
445			
440			
435	REC= 86%	RQD= 0%	CLAY (CH); firm to stiff; brown; moist; plant debris at top; grades to CLAY (CH); gray-brown; angular fragments of ARGILLITE and GRAYWACKE up to 1/2 ".
430	REC= 64%	RQD= 0%	Melange; angular fragments of GRAYWACKE in ARGILLITE matrix; gray to gray-brown. GRAYEACKE; moderately weathered; hard to very hard; intensely to very intensely fractured; healed fractures, (Calcite), (irregular, ehastaneszing). ARGILLITE; intensely to very intensely weathered; soft to moderatly hard; very intensely fractured; sheared.
425	REC= 94%	RQD= 0%	Argillite; gray to black; intensely weathered; moderately soft to moderately hard; sheared; weatheres to CLAY (CL); modeerately soft to firm; gray; medium plasticity; BOULDERS (Graywacke); rarely larger than 14".
420	REC= 93%	RQD= 0%	
	REC= 90%	RQD= 0%	-thin, open fractures; filled with SANDY CLAY (CL); yellow-brown; low plasticity.
415	REC= 92%	RQD= 10%	Graywacke; gray; moderately weathered; intensely fractured, healed with Calcite.
410	REC= 86%	RQD= 0%	Graywacke; gray to dark gray; moderately weathered; very hard; moderately to intensely fractured at all angles, tight fractures, rough, clean, many healed with Calcite; thin shear zones (~1") at 23' depth.
405	REC= 75%	RQD= 0%	Argillite with minor Graywacke. ARGILLITE; black; fresh to moderately weathered; moderately soft to moderately hard; moderately to very intensely fractured; ARGILLITE appears to decompose to gray fat CLAY where shearing is greatest; GRAYWACKE lenzes (~2-3"), wint healed
400	REC= 70%	RQD= 0%	fractures (CALCITE). GRAYWACKE; gray to dark gray; moderately weathered; very hard; moderately to intensely fractured at all angles, tight fractures, fough, clean, many healed with CALCITE; thin shear zones (~1").
395	REC= 90%	RQD= 0%	-less GRAYWACKE; more pervasively sheared throughout; GRAYWACKE is only present in the top 6".
			Failure plane.
390	REC= 97%	RQD= 21%	Graywacke clasts; gray to greenish gray; moderately weathered; moderately hard; very intensely fractured; in an ARGILLITE matrix; black; moderately to intensely weathered; moderately soft to soft.
	REC=100%	RQD= 0%	
385	REC= 90%	RQD= 0%	
	REC= 90%	RQD= 0%	-well graded.
			-single large clast; grades to ARGILLITE; intensely weathered; soft to medium soft; grades to GRAYWACKE clast; grades to ARGILLITE.
380	REC= 92%	RQD= 0%	
			-smaller GRAYWACKE clasts (~1/4 ").
			-GRAYWACKE in an ARGILLITE matrix; GRAYWACKE clasts (up to 2").
375	REC= 96%	RQD= 0%	
			-GRAYWACKE; gray to green-gray; moderately to intensely weathered; moderately hard to hard; very intensely fractured; sheared; healed fractures; clasts (1/4 " to 3"). ARGILLITE; black; intensely to very intensely weathered; soft to medium soft; sheared.
370	REC= 88%	RQD= 0%	
	REC=100%	RQD= 67%	-more green.
			-GRAYWACKE is moderately fractured.
365	REC= 76%	RQD= 0%	-increased quanity of small GRAYWACKE clasts.
			-GRAYWAKE is intensely fractured.
360	REC=100%	RQD= 0%	-clasts (<1/4").
			-sheared, little to no clasts.
	REC=NR*	RQD=NR*	Argillite; black; intensely to very intensely weathered; soft to moderately soft; sheared.
355	REC= 96%	RQD= 10%	-moderately to very intensely weathered; soft to moderately hard; moderately fractured; sheared; shear zones weather to CLAY; soft; gray to dark gray; moist; medium plasticity; little to no GRAYWACKE.
350	REC=100%	RQD= 16%	Graywacke; length (3/4 "); gray to green-gray; slightly weathered; hard; intensely fractured; few/little healed fractures.
345	REC=100%	RQD=NR*	Argillite and Graywacke; ARGILLITE; black; moderately to very intensely weathered, soft to moderately hard; moderately fractured; sheared; shear zones weathered to CLAY; soft; gray to dark gray; moist; medium plasticity. GRAYWACKE; intensely to slightly fractured.
340	REC= 86%	RQD= 25%	
335			05-22-01 Terminated at El 338.00'

107+00 108+00 109+00

PROFILE
HOR. 1"=10'
VER. 1"= 5'

ENGINEERING SERVICE CENTER
STRUCTURE FOUNDATIONS

DRAWN BY M. Reynolds 09/10
CHECKED BY A. Kaddoura

FIELD INVESTIGATION BY: C. Risden

ORIGINAL SCALE IN INCHES FOR REDUCED PLANS 0 1 2 3

STATE OF CALIFORNIA
DEPARTMENT OF TRANSPORTATION

DIVISION OF ENGINEERING SERVICES
OFFICE OF GEOTECHNICAL DESIGN BRANCH

CU 06-244
EA 4S6500

BRIDGE NO. 20E0062
POST MILE 52.1/52.5

DISREGARD PRINTS BEARING EARLIER REVISION DATES

REVISION DATES (PRELIMINARY STAGE ONLY)

SEGMENTED CIDH SOLDIER PILE WALL
LOG OF TEST BORINGS 2 of 3

SHEET 7 OF 8

REGISTERED ENGINEER - CIVIL
11-04-10
6-6-11
PLANS APPROVAL DATE

The State of California or its officers or agents shall not be responsible for the accuracy or completeness of electronic copies of this plan sheet.

REGISTERED PROFESSIONAL ENGINEER
Ali K. Kaddoura
No. 55710
Exp. 12-31-12
CIVIL
STATE OF CALIFORNIA

DIST.	COUNTY	ROUTE	POST MILES TOTAL PROJECT	SHEET NO.	TOTAL SHEETS
04	Son	101	R52.1/R52.5	31	41

FILE => 20E0062-Z-LTB02.dgn

USERNAME => trlim DATE PLOTTED => 07-JUN-2011 TIME PLOTTED => 10:52

DIST.	COUNTY	ROUTE	POST MILES TOTAL PROJECT	SHEET NO.	TOTAL SHEETS
04	Son	101	R52.1/R52.5	32	41

Ali Kaddoura 11-04-10
REGISTERED ENGINEER - CIVIL

6-6-11
PLANS APPROVAL DATE

REGISTERED PROFESSIONAL ENGINEER
Ali K. Kaddoura
No. 55710
Exp. 12-31-12
CIVIL
STATE OF CALIFORNIA

The State of California or its officers or agents shall not be responsible for the accuracy or completeness of electronic copies of this plan sheet.

NOTES: 1. The indicated numbers for Standard Penetration Tests, (SPT), are the uncorrected field values obtained during drilling.

2. The SPT for borings SH-1 and SH-2 were performed using an automatic drop safety hammer with 140 lbs./ 30 in.

(For Boring Location See Plan, LOTB Sheet 1 of 3)

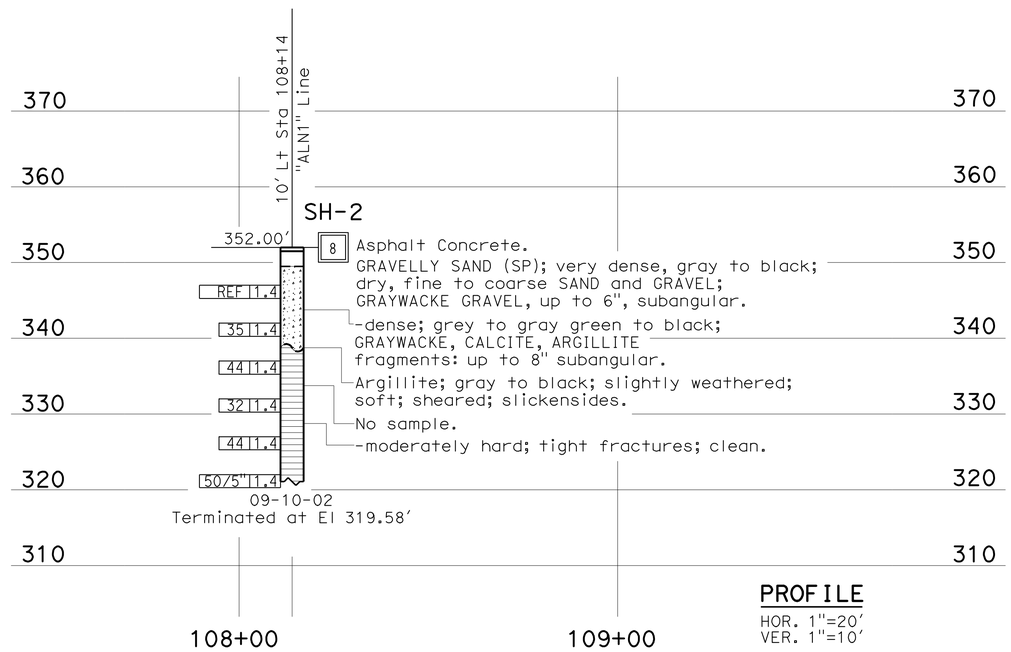

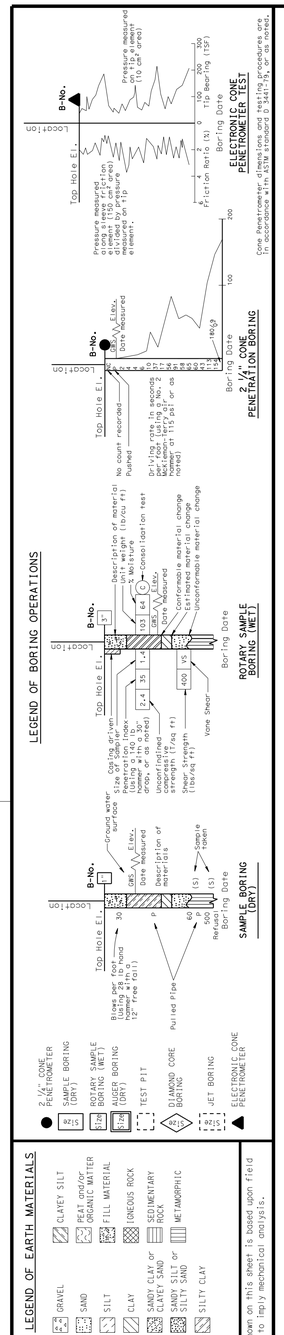

LEGEND OF EARTH MATERIALS

GRAVEL · SAND · SILT · CLAY · SANDY CLAY or CLAYEY SAND · SANDY SILT or SILTY SAND · SILTY CLAY · CLAYEY SILT · PEAT and/or ORGANIC MATTER · FILL MATERIAL · IGNEOUS ROCK · SEDIMENTARY ROCK · METAMORPHIC

CONSISTENCY CLASSIFICATION FOR SOILS

According to the Standard Penetration Test

SPT N-Value (Blows/ Foot)	Granular	SPT N-Value (Blows/ Foot)	Cohesive
0-4	Very Loose	<2	Very Soft
5-10	Loose	2-4	Soft
11-30	Medium Dense	5-8	Medium stiff
31-50	Dense	9-15	Stiff
>50	Very Dense	16-30	Very Stiff
>70	Very Dense	31-60	Hard
		>60	Very Hard

NOTE: Classification of earth material as shown on this sheet is based upon field inspection and is not to be construed to imply mechanical analysis.

ENGINEERING SERVICE CENTER	STRUCTURE FOUNDATIONS
DRAWN BY	M. Reynolds 09/10
CHECKED BY	A. Kaddoura

FIELD INVESTIGATION BY: C. Risden

STATE OF CALIFORNIA DEPARTMENT OF TRANSPORTATION

DIVISION OF ENGINEERING SERVICES OFFICE OF GEOTECHNICAL DESIGN BRANCH

BRIDGE NO. 20E0062
POST MILE 52.1/52.5

SEGMENTED CIDH SOLDIER PILE WALL
LOG OF TEST BORINGS 3 of 3

CU06-244
EA4S6500

SHEET 8 OF 8

TL 6052 (CADD 3/24/97)

ORIGINAL SCALE IN INCHES FOR REDUCED PLANS 0 1 2 3

DISREGARD PRINTS BEARING EARLIER REVISION DATES

REVISION DATES (PRELIMINARY STAGE ONLY)

FILE => 20e0062-z-ltb03.dgn

USERNAME => trlim DATE PLOTTED => 07-JUN-2011 TIME PLOTTED => 10:53

DIST	COUNTY	ROUTE	POST MILES TOTAL PROJECT	SHEET No.	TOTAL SHEETS
04	Son	101	R52.1/R52.5	33	41

REGISTERED CIVIL ENGINEER 2-8-11 DATE

6-6-11
PLANS APPROVAL DATE

REGISTERED PROFESSIONAL ENGINEER ISAIAS D. YALAN No. 68269 Exp. 9-30-2011 CIVIL STATE OF CALIFORNIA

The State of California or its officers or agents shall not be responsible for the accuracy or completeness of electronic copies of this plan sheet.

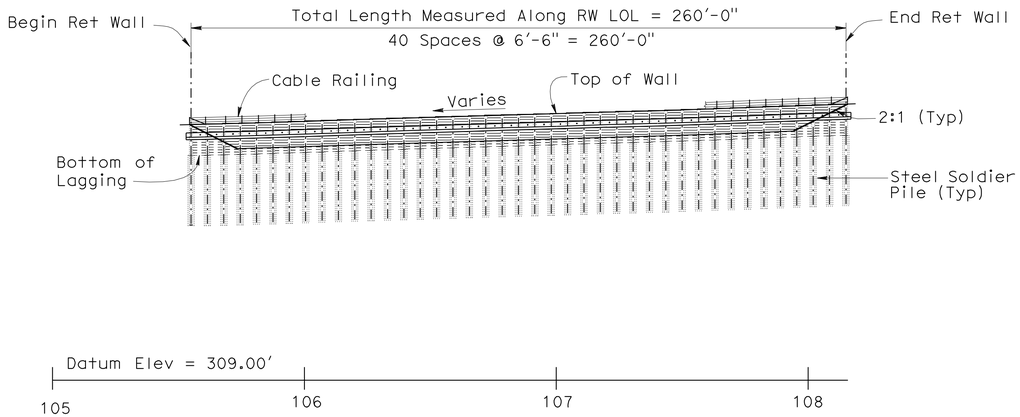

ELEVATION

1" = 30'

QUANTITIES

STRUCTURE EXCAVATION (SOLDIER PILE WALL)	416	CY
STRUCTURE BACKFILL (SOLDIER PILE WALL)	120	CY
CONCRETE BACKFILL (SOLDIER PILE WALL)	203	CY
LEAN CONCRETE BACKFILL	97	CY
30" DRILLED HOLE	1,650	LF
STEEL SOLDIER PILE (W 14 X 90)	1,640	LF
TIEBACK ANCHOR	40	EA
STRUCTURAL CONCRETE, WALER	56	CY
BAR REINFORCING STEEL (RETAINING WALL)	15,700	LB
TIMBER LAGGING	17.3	MFBM
CLEAN AND PAINT STEEL SOLDIER PILE	LUMP	SUM
CABLE RAILING	263	LF

STANDARD PLANS DATED MAY 2006

A10A ACRONYMS AND ABBREVIATIONS (SHEET 1 OF 2)
A10B ACRONYMS AND ABBREVIATIONS (SHEET 2 OF 2)
A10C SYMBOLS (SHEET 1 OF 2)
A10D SYMBOLS (SHEET 2 OF 2)
B11-47 CABLE RAILING

STANDARD PLAN SHEET No.
DETAIL No.

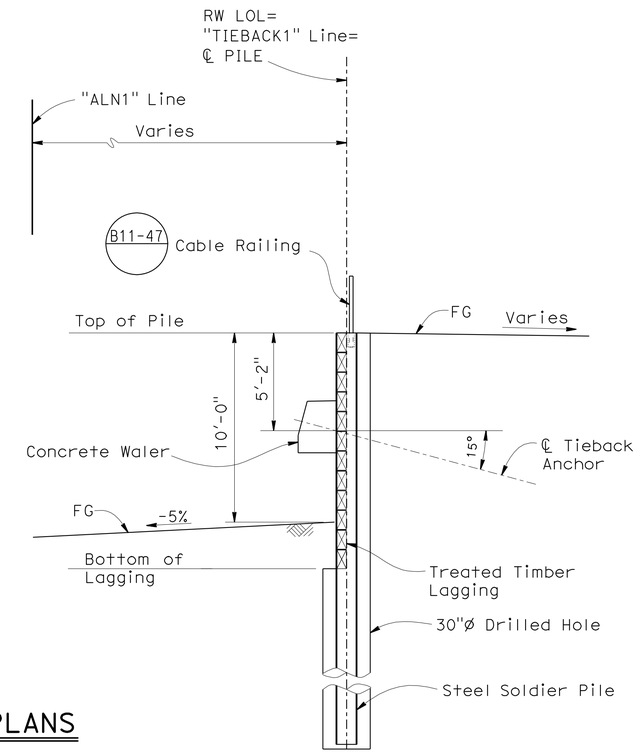

TYPICAL SECTION

¼" = 1'-0"

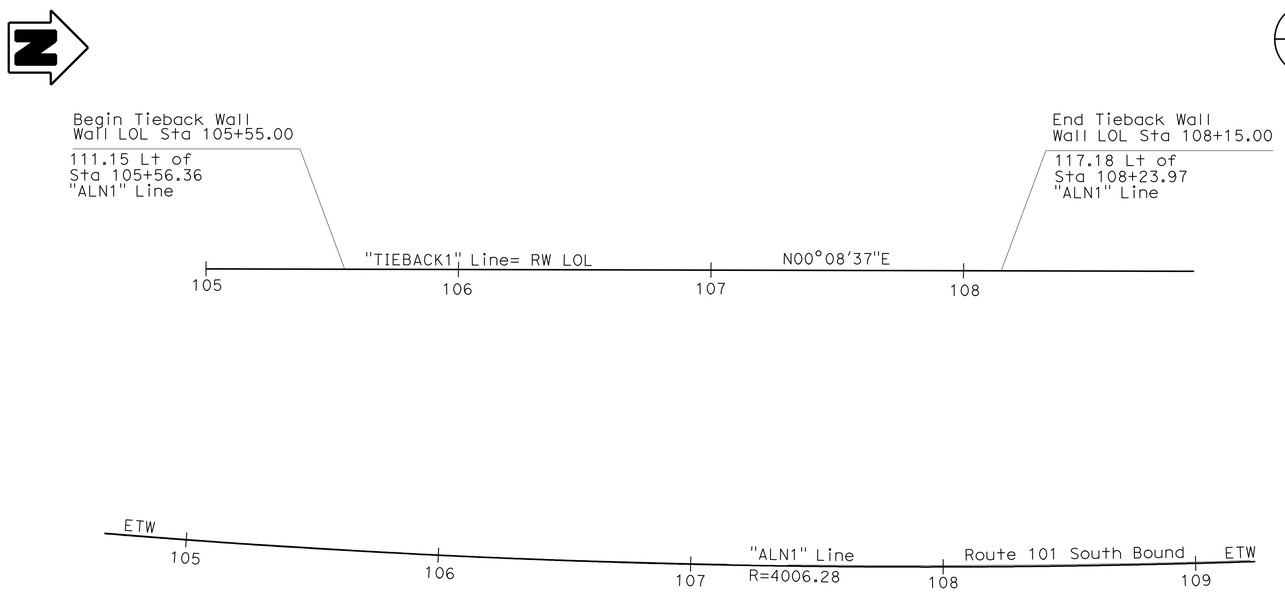

PLAN

1" = 30'

INDEX TO PLANS

1 GENERAL PLAN
2 STRUCTURE PLAN
3 FOUNDATION PLAN
4 TYPICAL SECTION
5 DETAILS
6 TIEBACK DETAILS
7 LOG OF TEST BORINGS 1 OF 3
8 LOG OF TEST BORINGS 2 OF 3
9 LOG OF TEST BORINGS 3 OF 3

Note:

For "GENERAL NOTES" see TYPICAL SECTION"" sheet

Gordon Danke DESIGN ENGINEER	DESIGN	BY Isaias Yalan	CHECKED Nasser Tachta	LOAD & RESISTANCE FACTOR DESIGN	
	DETAILS	BY Rania Heider	CHECKED Nasser Tachta	LAYOUT: BY Isaias Yalan	CHECKED Nasser Tachta
	QUANTITIES	BY Isaias Yalan	CHECKED Nasser Tachta	SPECIFICATIONS: BY C. Siegenthaler	PLANS AND SPECS COMPARED C. Siegenthaler

ORIGINAL SCALE IN INCHES FOR REDUCED PLANS 0 1 2 3

STATE OF CALIFORNIA
DEPARTMENT OF TRANSPORTATION

DIVISION OF ENGINEERING SERVICES
STRUCTURE DESIGN
DESIGN BRANCH 9

BRIDGE NO. 20E0063
POST MILE 52.1/52.5

TIEBACK WALL
GENERAL PLAN

UNIT: 3594
PROJECT NUMBER & PHASE: 04 0000 1255-1 CONTRACT NO.: 04-4S6501

DISREGARD PRINTS BEARING EARLIER REVISION DATES

REVISION DATES: 8-31-10 8-26-10 11-04-10 1-12-11

SHEET 1 OF 9

DIST	COUNTY	ROUTE	POST MILES TOTAL PROJECT	SHEET No.	TOTAL SHEETS
04	Son	101	R52.1/R52.5	34	41

REGISTERED CIVIL ENGINEER 2-8-11 DATE

6-6-11
PLANS APPROVAL DATE

REGISTERED PROFESSIONAL ENGINEER
ISAIAS D. YALAN
No. 68269
Exp. 9-30-2011
CIVIL
STATE OF CALIFORNIA

The State of California or its officers or agents shall not be responsible for the accuracy or completeness of electronic copies of this plan sheet.

Pile Number	Station	Elevation at Top of the Pile
1	105+55.00	410.78
2	105+61.50	410.95
3	105+68.00	411.12
4	105+74.50	411.29
5	105+81.00	411.49
6	105+87.50	411.68
7	105+94.00	411.88
8	106+00.50	412.10
9	106+07.00	412.33
10	106+13.50	412.56
11	106+20.00	412.76
12	106+26.50	412.95
13	106+33.00	413.15
14	106+39.50	413.35
15	106+46.00	413.55
16	106+52.50	413.75
17	106+59.00	413.95
18	106+65.50	414.15
19	106+72.00	414.35
20	106+78.50	414.56
21	106+85.00	414.71

Pile Number	Station	Elevation at Top of the Pile
22	106+91.50	414.89
23	106+98.00	415.08
24	107+04.50	415.29
25	107+11.00	415.51
26	107+17.50	415.70
27	107+24.00	415.86
28	107+30.50	416.03
29	107+37.00	416.22
30	107+43.50	416.42
31	107+50.00	416.63
32	107+56.50	416.85
33	107+63.00	417.09
34	107+69.50	417.34
35	107+76.00	417.59
36	107+82.50	417.83
37	107+89.00	418.07
38	107+95.50	418.31
39	108+02.00	418.51
40	108+08.50	418.74
41	108+15.00	418.74

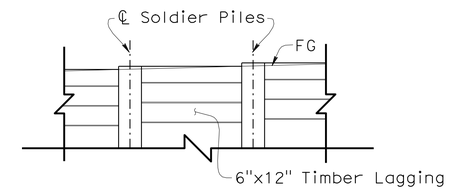

TOP OF WALL PART ELEVATION

1/4" = 1'

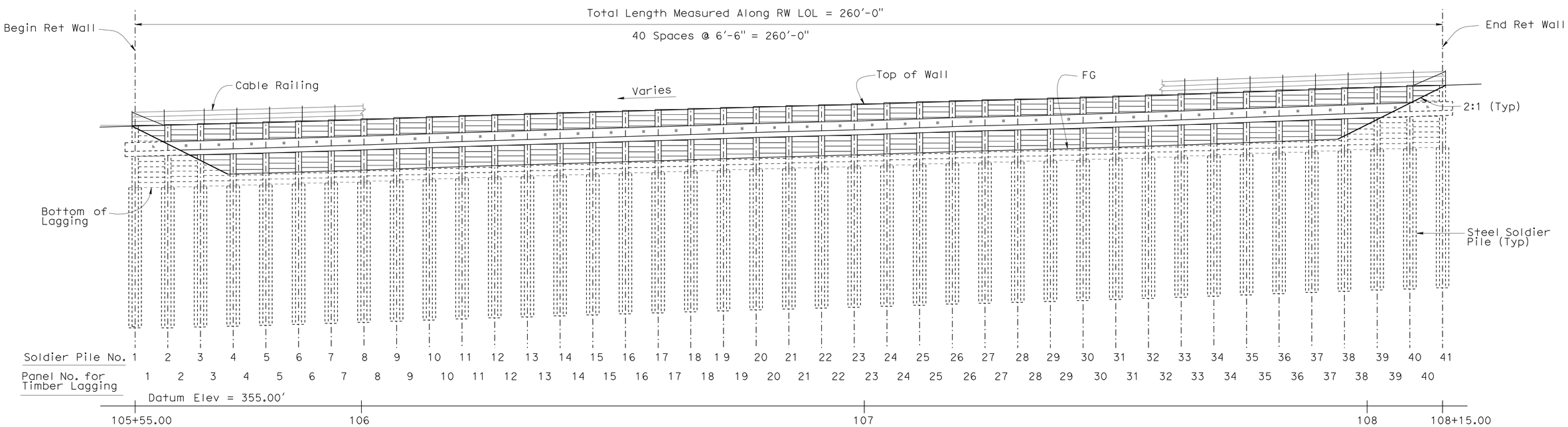

ELEVATION

1" = 10'

Note:
Number of timber lagging per panel = 12

	BY	CHECKED
DESIGN	Isaias Yalan	Nasser Tachta
DETAILS	Rania Heider	Nasser Tachta
QUANTITIES	Isaias Yalan	Nasser Tachta

STATE OF CALIFORNIA
DEPARTMENT OF TRANSPORTATION

DIVISION OF ENGINEERING SERVICES
STRUCTURE DESIGN
DESIGN BRANCH 9

BRIDGE NO. 20E0063
POST MILE 52.1/52.5

TIEBACK WALL
STRUCTURE PLAN

STRUCTURES DESIGN DETAIL SHEET (ENGLISH) (REV. 09-01-10)

ORIGINAL SCALE IN INCHES FOR REDUCED PLANS 0 1 2 3

UNIT: 3594
PROJECT NUMBER & PHASE: 04 0000 1255-1 CONTRACT NO.: 04-4S6501

DISREGARD PRINTS BEARING EARLIER REVISION DATES

REVISION DATES: 8-09-10 8-24-10 11-03-10 1-19-11

SHEET 2 OF 9

FILE => 20e0063-c-sp.dgn

USERNAME => ttim DATE PLOTTED => 07-JUN-2011 TIME PLOTTED => 10:53

DIST	COUNTY	ROUTE	POST MILES TOTAL PROJECT	SHEET No.	TOTAL SHEETS
04	Son	101	R52.1/R52.5	35	41

REGISTERED CIVIL ENGINEER 2-8-11 DATE

6-6-11
PLANS APPROVAL DATE

REGISTERED PROFESSIONAL ENGINEER ISAIAS D. YALAN No. 68269 Exp. 9-30-2011 CIVIL STATE OF CALIFORNIA

The State of California or its officers or agents shall not be responsible for the accuracy or completeness of electronic copies of this plan sheet.

CURVE DATA

No.	R	Δ	T	L
(A)	4006.28	27°30'47"	980.81	1923.78

SURVEY CONTROL

PM96 (Not Shown On Plan)
Fnd 1" IP w/ CalTrans PP
212.70 Ft Rt "ALN1" Line, Rte 101
Sta 107+48.79
N 417,824.40
E 1,712,187.68
Elev= 358.69

PM97 (Not Shown On Plan)
Fnd 1" IP w/ CalTrans PP
194.14 Ft Rt "ALN1" Line, Rte 101
Sta 111+10.63
N 418,203.63
E 1,712,156.19
Elev= 367.01

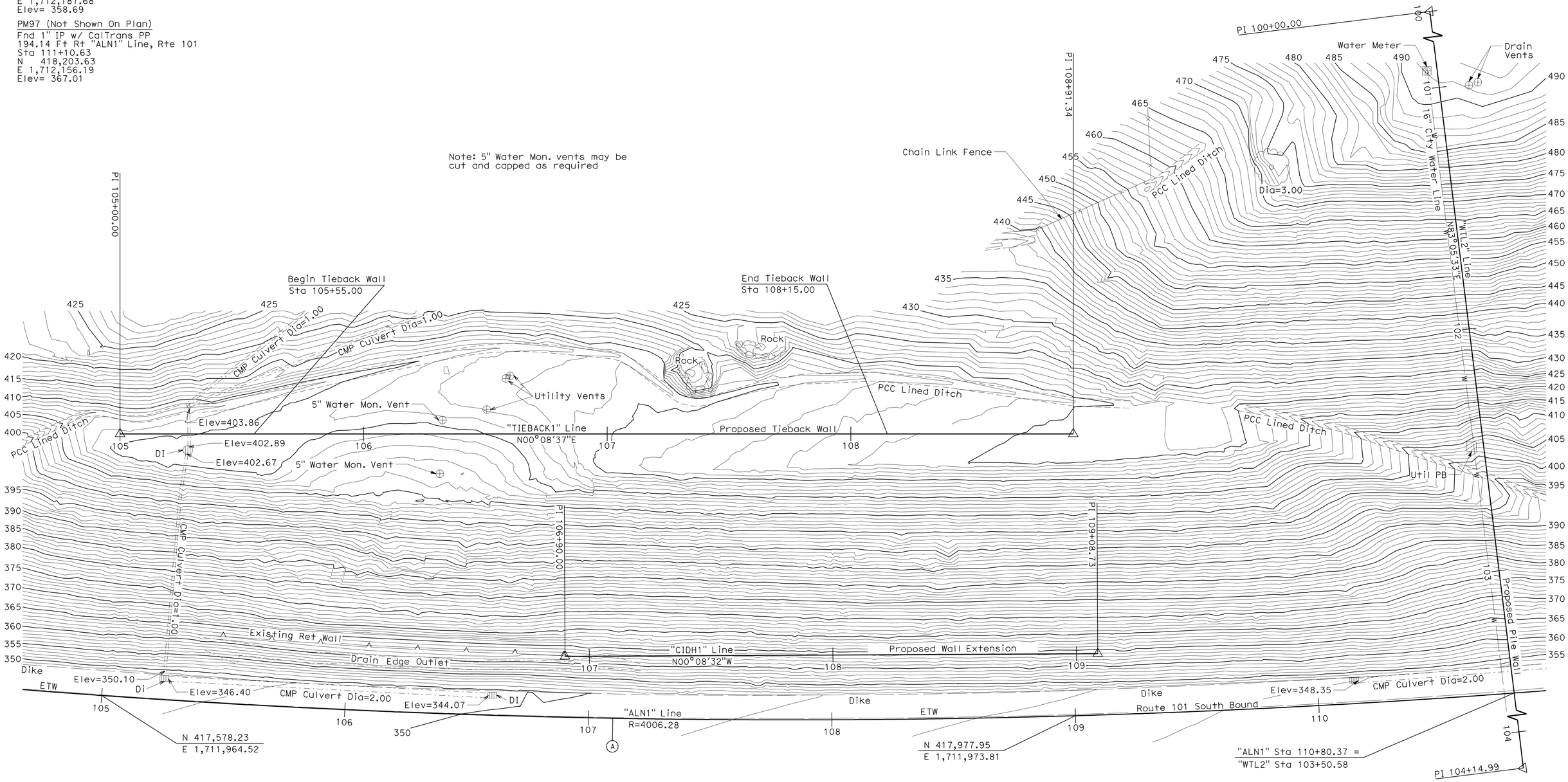

PRELIMINARY INVESTIGATION SECTION									
SCALE 1"=20'	VERT.DATUM NGVD29	PHOTOGRAMMETRY AS OF: X							
	HORZ.DATUM NAD27	SURVEYED	BY District	12/2009	CHECKED	BY J.Borden	07/2010		
ALIGNMENT TIES Dist. Traverse Sheet		DRAFTED	BY J.Martinez	07/2010	CHECKED	BY S.Sou	07/2010		

DESIGN	BY Isaias Yalan	CHECKED Nassar Tachta
DETAILS	BY Tim Fairall	CHECKED Nassar Tachta
QUANTITIES	BY Isaias Yalan	CHECKED Nassar Tachta

STATE OF CALIFORNIA
DEPARTMENT OF TRANSPORTATION

DIVISION OF ENGINEERING SERVICES
STRUCTURE DESIGN
DESIGN BRANCH 9

BRIDGE NO. 20E0063
POST MILE 52.1/52.5

TIEBACK WALL
FOUNDATION PLAN

STRUCTURES FOUNDATION PLAN SHEET (ENGLISH) (REV. 09-01-10)

ORIGINAL SCALE IN INCHES FOR REDUCED PLANS 0 1 2 3

UNIT: 3594
PROJECT NUMBER & PHASE: 0400001255 1
CONTRACT NO.: 04-4S6501

DISREGARD PRINTS BEARING EARLIER REVISION DATES

REVISION DATES 01/03/11 02/04/11 02/07/11

SHEET 3 OF 9

FILE => 20e0063-e-fpl01.dgn

DIST	COUNTY	ROUTE	POST MILES TOTAL PROJECT	SHEET No.	TOTAL SHEETS
04	Son	101	R52.1/R52.5	36	41

REGISTERED CIVIL ENGINEER 2-8-11 DATE

6-6-11
PLANS APPROVAL DATE

REGISTERED PROFESSIONAL ENGINEER ISAIAS D. YALAN No. 68269 Exp. 9-30-2011 CIVIL STATE OF CALIFORNIA

The State of California or its officers or agents shall not be responsible for the accuracy or completeness of electronic copies of this plan sheet.

LIMITS OF CLEAN & PAINT STEEL SOLDIER PILE

3/4"=1'-0"

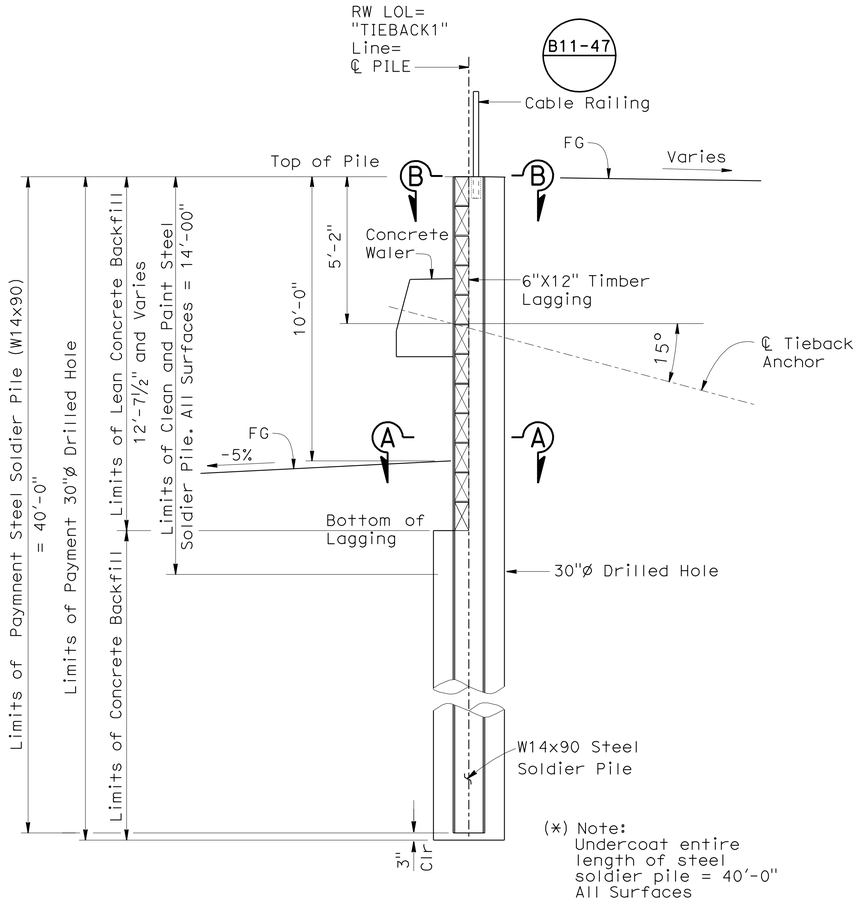

TYPICAL SECTION

3/8"=1'-0"

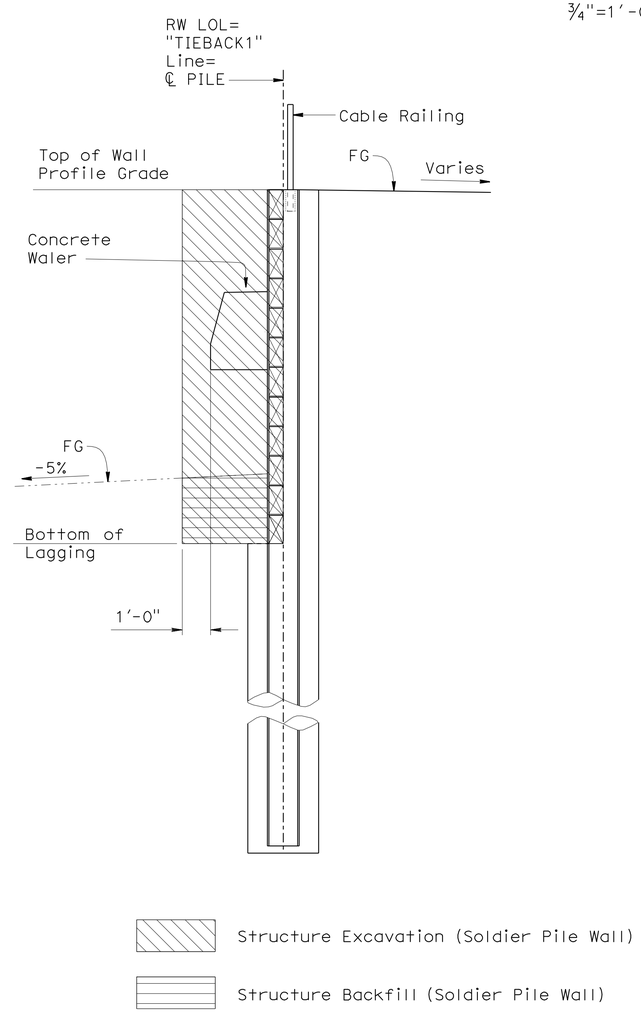

LIMITS OF EXCAVATION AND BACKFILL

3/8"=1'-0"

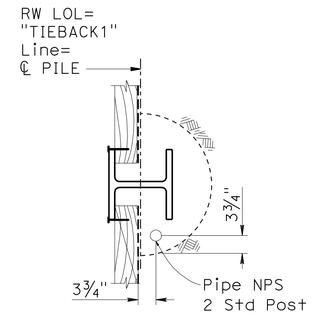

SECTION B-B

3/4"=1'-0"

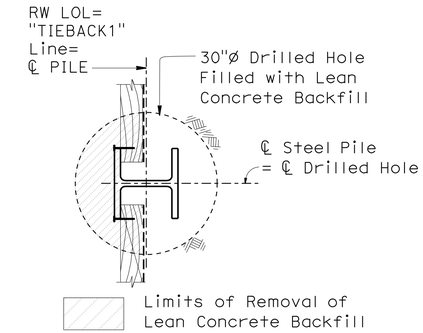

SECTION A-A

3/4"=1'-0"

GENERAL NOTES

DESIGN:

AASHTO LRFD Bridge Design Specifications, 4th Edition/2007 with California Amendments

SOIL PARAMETERS:

Active Pressure:
Between 0 (Top of embankment buttress slope =Top of Wall) and 10 feet depth
$\phi = 25°$ $\gamma = 140$ pcf

Passive Pressure:
Below the depth of 10 feet
$\phi = 36°$ $\gamma = 130$ pcf
C = 200 psf
δ = Friction factor = $\frac{2}{3}$ ϕ

REINFORCED CONCRETE:
f_y= 60 ksi (Yield strength of reinforcement)
f'_c= 4 ksi (Concrete compressive strength at 28 days)
n = 8

STRUCTURAL STEEL:
Steel Piles - ASTM Designation: A709/A709M, Grade 50 (345) or A572/A572M

PRESTRESSING STEEL:
Strands - ASTM designation A416
T = Design Force per Tieback = 118 kips (All tiebacks)
f_{pu} = Minimum tensile strength of prestressing steel (Kips per square inch)
A_s (Min) = Minimum cross sectional area of prestressing steel in Tieback tendon. (Square inch)

$$A_s(\text{Min}) = \frac{1.5\ T}{0.75\ f_{pu}}$$

STRUCTURAL TIMBER:
Treated Douglas Fir - Grade No. 1 or better
Timber to be full sawn

	BY	CHECKED
DESIGN	Isaias Yalan	Nasser Tachta
DETAILS	Tim Fairall	Nasser Tachta
QUANTITIES	Isaias Yalan	Nasser Tachta

STATE OF CALIFORNIA
DEPARTMENT OF TRANSPORTATION

DIVISION OF ENGINEERING SERVICES
STRUCTURE DESIGN
DESIGN BRANCH 9

BRIDGE NO. 20E0063
POST MILE 52.1/52.5

TIEBACK WALL
TYPICAL SECTION

STRUCTURES DESIGN DETAIL SHEET (ENGLISH) (REV. 09-01-10)

ORIGINAL SCALE IN INCHES FOR REDUCED PLANS 0 1 2 3

UNIT: 3594
PROJECT NUMBER & PHASE: 04 0000 1255-1 CONTRACT NO.: 04-4S6501

DISREGARD PRINTS BEARING EARLIER REVISION DATES

REVISION DATES 8-03-10 8-19-10 11-02-10 1-13-11

SHEET 4 OF 9

FILE => 20e0063-k-ts.dgn

USERNAME => trflm DATE PLOTTED => 07-JUN-2011 TIME PLOTTED => 10:53

DIST	COUNTY	ROUTE	POST MILES TOTAL PROJECT	SHEET No.	TOTAL SHEETS
04	Son	101	R52.1/R52.5	37	41

REGISTERED CIVIL ENGINEER — DATE 2-8-11

PLANS APPROVAL DATE 6-6-11

REGISTERED PROFESSIONAL ENGINEER — ISAIAS D. YALAN — No. 68269 — Exp. 9-30-11 — CIVIL — STATE OF CALIFORNIA

The State of California or its officers or agents shall not be responsible for the accuracy or completeness of electronic copies of this plan sheet.

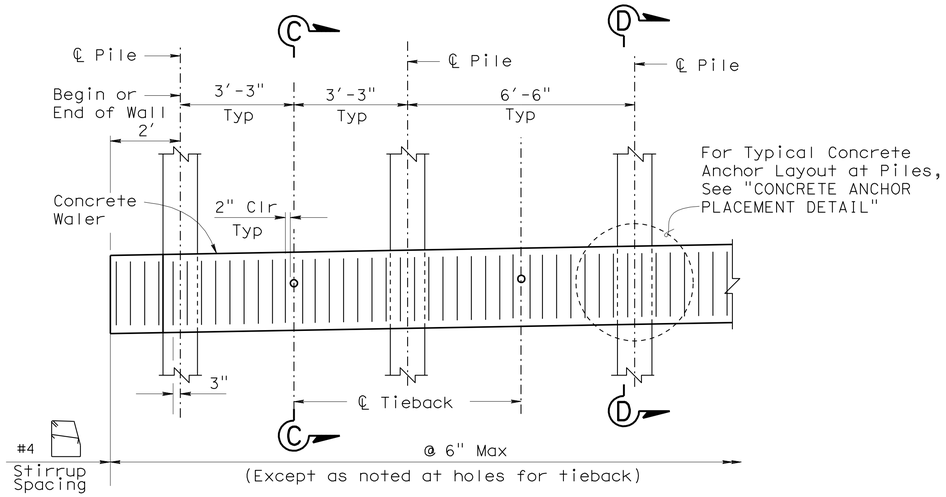

Notes:
1. Waler to have integral pigment colored concrete
2. Timber lagging not shown

WALER PART ELEVATION

NO SCALE

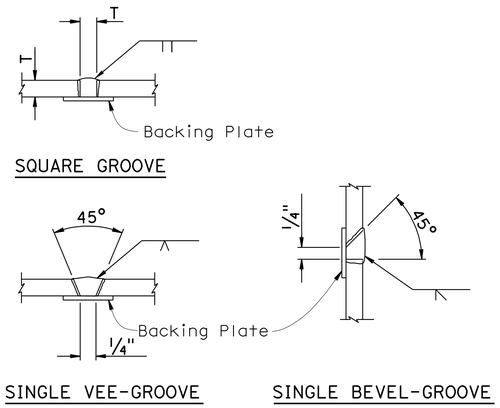

PILE WELDING DETAIL-BUTT JOINTS

Notes:
1. Single Vee-Groove And Square Groove Permitted for all positions.
2. Single Bevel-Groove permitted for horizontal joints only

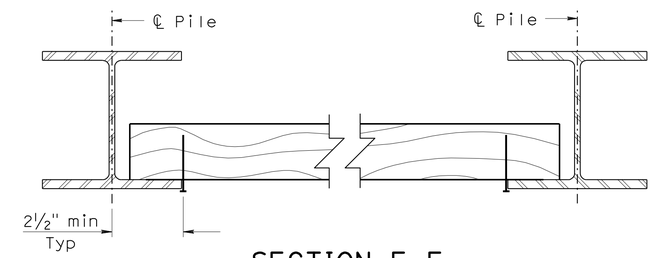

SECTION E-E

NO SCALE

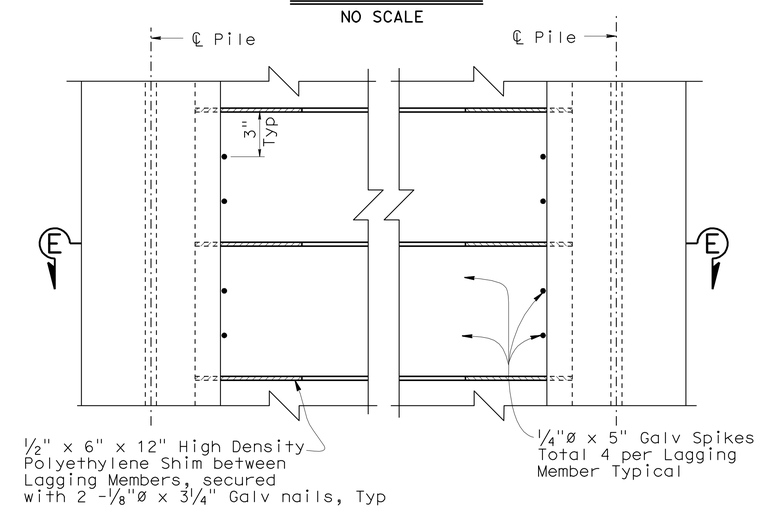

LAGGING PART ELEVATION

NO SCALE

Note:
Waler to have integral pigment colored concrete

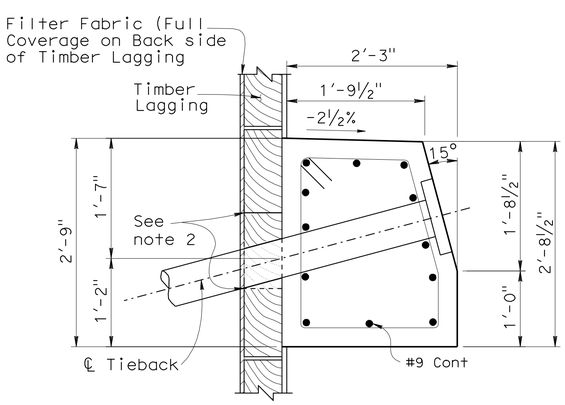

Notes:
1. For Reinf, see "SECTION D-D".
2. Omit gap between lagging members behind concrete waler.

SECTION C-C

1" = 1'-0"

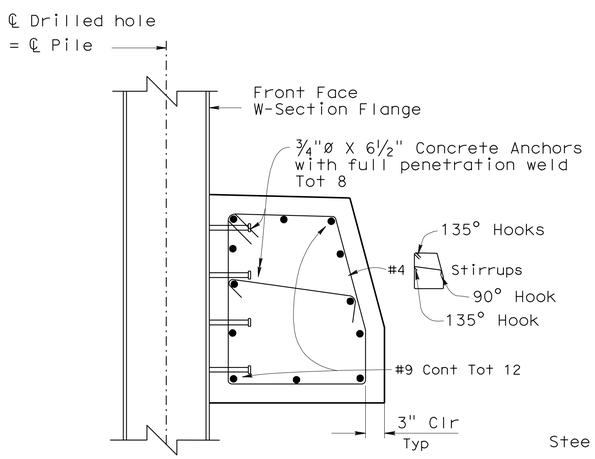

Note: For dimensions not shown, see "SECTION C-C"

SECTION D-D

1" = 1'-0"

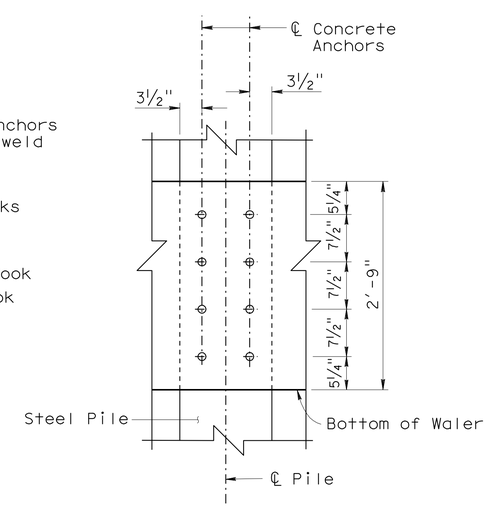

CONCRETE ANCHOR PLACEMENT DETAIL

1" = 1'-0"

DESIGN	BY Isaias Yalan	CHECKED Nasser Tachta	
DETAILS	BY Rania Heider	CHECKED Nasser Tachta	
QUANTITIES	BY Isaias Yalan	CHECKED Nasser Tachta	

STATE OF CALIFORNIA — DEPARTMENT OF TRANSPORTATION

DIVISION OF ENGINEERING SERVICES — STRUCTURE DESIGN — DESIGN BRANCH 9

BRIDGE NO. 20E0063 — POST MILE 52.1/52.5

TIEBACK WALL DETAILS

STRUCTURES DESIGN DETAIL SHEET (ENGLISH) (REV. 09-01-10)

ORIGINAL SCALE IN INCHES FOR REDUCED PLANS 0 1 2 3

UNIT: 3594
PROJECT NUMBER & PHASE: 04 0000 1255-1 CONTRACT NO.: 04-4S6501

DISREGARD PRINTS BEARING EARLIER REVISION DATES

REVISION DATES: 8-03-10 8-19-10 11-02-10 1-19-11

SHEET 5 OF 9

FILE => 20e0063-l-dets01.dgn

USERNAME => trflm DATE PLOTTED => 07-JUN-2011 TIME PLOTTED => 10:53

DIST	COUNTY	ROUTE	POST MILES TOTAL PROJECT	SHEET No.	TOTAL SHEETS
04	Son	101	R52.1/R52.5	38	41

REGISTERED CIVIL ENGINEER 2-8-11 DATE

6-6-11
PLANS APPROVAL DATE

REGISTERED PROFESSIONAL ENGINEER ISAIAS D. YALAN No. 68269 Exp. 9-30-11 CIVIL STATE OF CALIFORNIA

The State of California or its officers or agents shall not be responsible for the accuracy or completeness of electronic copies of this plan sheet.

NOTES:

1. Anchorage enclosure shall only be used when anchor head assembly is not enclosed in concrete.
2. Anchorage enclosure shall have provisions to allow injecting grout at low end and venting at high end. Galvanize after fabrication.
3. Silicone sealant to cover full width of flange.
4. Steel tube welded to bearing plate (Min thickness = 1/4"). Galvanize assembly after fabrication
5. Steel tube welded to bearing plate inside diameter of steel tube to be 1" greater than outside diameter of smooth sheathing (Min thickness = 1/4") Galvanize assembly after fabrication.
6. For other wall details, see Structural Plans.

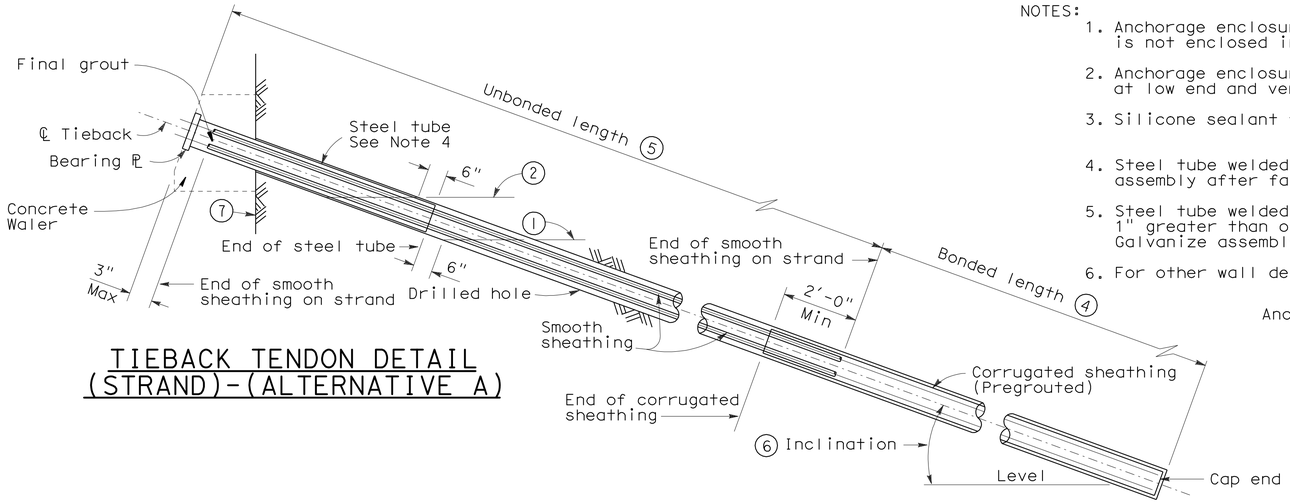

TIEBACK TENDON DETAIL (STRAND)-(ALTERNATIVE A)

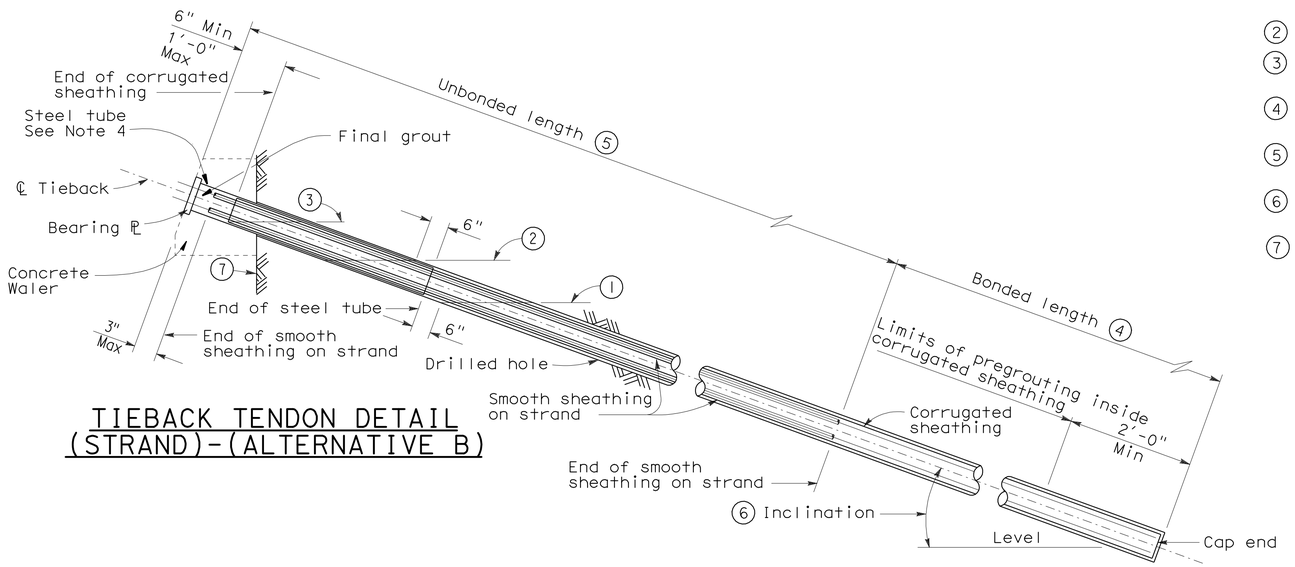

TIEBACK TENDON DETAIL (STRAND)-(ALTERNATIVE B)

LEGEND:

1. Level of initial grouting for drill hole 6" in diameter or smaller
2. Level of secondary grouting
3. Level of initial grouting inside corrugated sheathing
4. Bonded length shall be determined by the contractor
5. Unbonded length= 65'-0"
6. For inclination, see Project Plans
7. Face of Wall Excavation

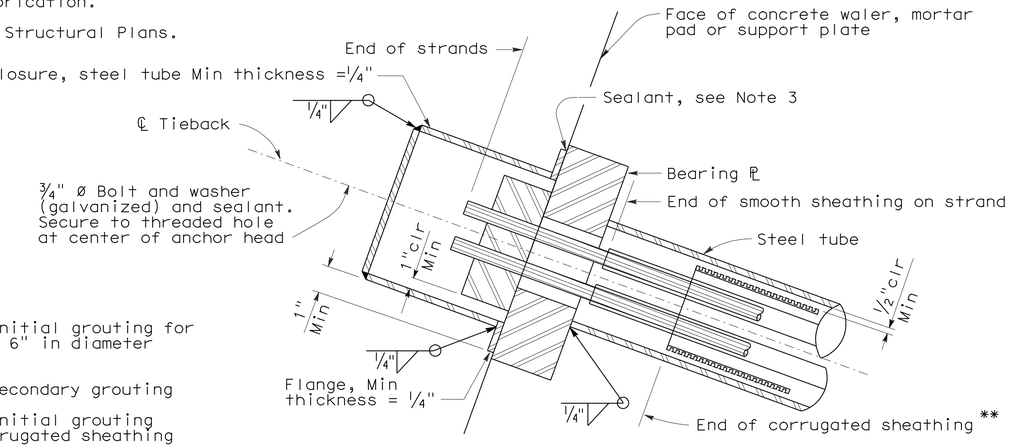

ALTERNATIVE X

** Alternative B tendon only

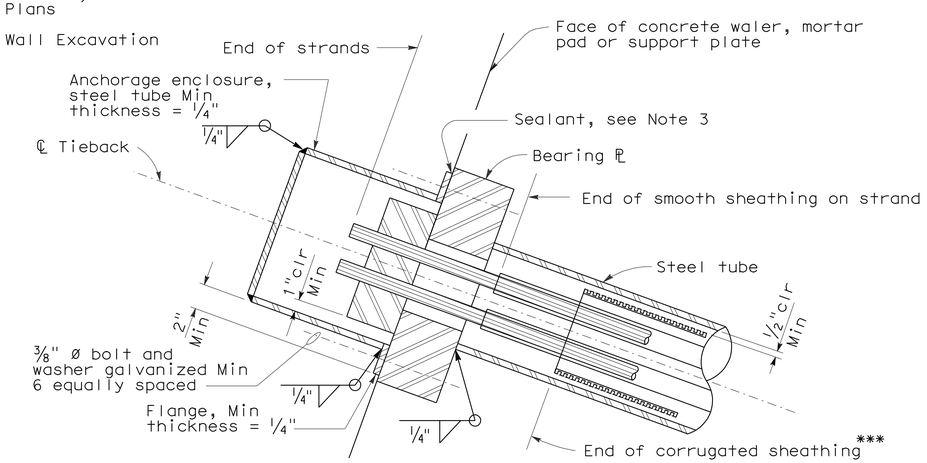

ALTERNATIVE Y

*** Alternative B tendon only

ANCHORAGE ENCLOSURE DETAILS

DESIGN	BY Isaias Yalan	CHECKED Nasser Tachta	
DETAILS	BY Rania Heider	CHECKED Nasser Tachta	
QUANTITIES	BY Isaias Yalan	CHECKED Nasser Tachta	

STATE OF CALIFORNIA
DEPARTMENT OF TRANSPORTATION

DIVISION OF ENGINEERING SERVICES
STRUCTURE DESIGN
DESIGN BRANCH 9

BRIDGE NO. 20E0063
POST MILE 52.1/52.5

TIEBACK WALL
TIEBACK DETAILS

STRUCTURES DESIGN DETAIL SHEET (ENGLISH) (REV. 09-01-10)

ORIGINAL SCALE IN INCHES FOR REDUCED PLANS 0 1 2 3

UNIT: 3594
PROJECT NUMBER & PHASE: 04 0000 1255-1 CONTRACT NO.: 04-4S6501

DISREGARD PRINTS BEARING EARLIER REVISION DATES

REVISION DATES 8-19-10 11-02-10 1-20-11 2-10-11

SHEET 6 OF 9

FILE => 20e0063-1-tbdet.dgn

USERNAME => trflm DATE PLOTTED => 07-JUN-2011 TIME PLOTTED => 10:53

DIST.	COUNTY	ROUTE	POST MILES TOTAL PROJECT	SHEET NO.	TOTAL SHEETS
04	Son	101	R52.1/R52.5	39	41

Ali Kaddoura 11-04-10
REGISTERED ENGINEER - CIVIL

6-6-11
PLANS APPROVAL DATE

REGISTERED PROFESSIONAL ENGINEER Ali K. Kaddoura No. 55710 Exp. 12-31-12 CIVIL STATE OF CALIFORNIA

The State of California or its officers or agents shall not be responsible for the accuracy or completeness of electronic copies of this plan sheet.

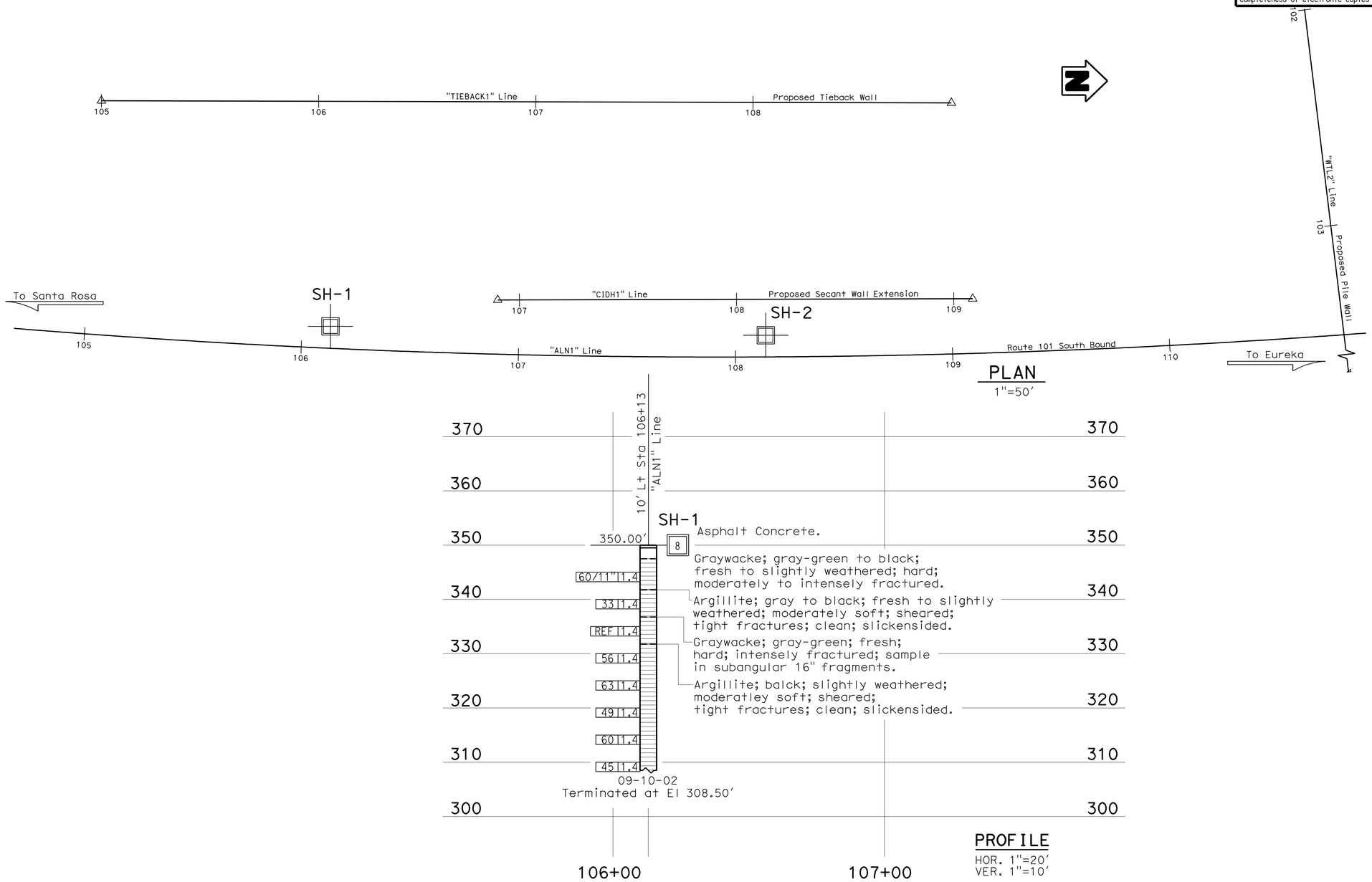

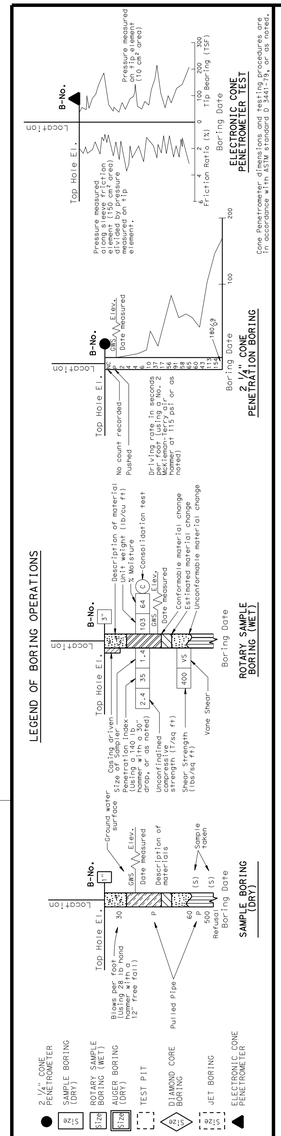

CONSISTENCY CLASSIFICATION FOR SOILS

According to the Standard Penetration Test

SPT N-Value (Blows/ Foot)	Granular	SPT N-Value (Blows/ Foot)	Cohesive
0-4	Very Loose	<2	Very Soft
5-10	Loose	2-4	Soft
11-30	Medium Dense	5-8	Medium stiff
31-50	Dense	9-15	Stiff
>50	Very Dense	16-30	Very Stiff
>70	Very Dense	31-60	Hard
		>60	Very Hard

LEGEND OF EARTH MATERIALS

GRAVEL, SAND, SILT, CLAY, CLAYEY SILT, PEAT and/or ORGANIC MATTER, FILL MATERIAL, IGNEOUS ROCK, SEDIMENTARY ROCK, METAMORPHIC, SANDY CLAY or CLAYEY SAND, SANDY SILT or SILTY SAND, SILTY CLAY

NOTE: Classification of earth material as shown on this sheet is based upon field inspection and is not to be construed to imply mechanical analysis.

ENGINEERING SERVICE CENTER	STRUCTURE FOUNDATIONS
DRAWN BY	M. Reynolds 09/10
CHECKED BY	A. Kaddoura

FIELD INVESTIGATION BY: C. Risden

STATE OF CALIFORNIA DEPARTMENT OF TRANSPORTATION

DIVISION OF ENGINEERING SERVICES OFFICE OF GEOTECHNICAL DESIGN BRANCH

BRIDGE NO. 20E0063
POST MILE 52.1/52.5

TIEBACK WALL
LOG OF TEST BORINGS 1 of 3

TL 6052 (CADD 3/24/97)

ORIGINAL SCALE IN INCHES FOR REDUCED PLANS 0 1 2 3

CU 06-244
EA 4S6500

DISREGARD PRINTS BEARING EARLIER REVISION DATES

REVISION DATES (PRELIMINARY STAGE ONLY)

SHEET 7 OF 9

FILE => 20e0063-z-ltb01.dgn

USERNAME => frpierce DATE PLOTTED => 07-JUN-2011 TIME PLOTTED => 10:29

TL 6052 (CADD 3/24/97)

CONSISTENCY CLASSIFICATION FOR SOILS

According to the Standard Penetration Test

SPT N-Value (Blows/ foot)	Granular	SPT N-Value (Blows/ foot)	Cohesive
0-4	Very Loose	<2	Very Soft
5-10	Loose	2-4	Soft
11-30	Medium Dense	5-8	Medium stiff
31-50	Dense	9-15	Stiff
>50	Very Dense	16-30	Very Stiff
>70	Very Dense	31-60	Hard
		>60	Very Hard

LEGEND OF EARTH MATERIALS

GRAVEL; SAND; SILT; CLAY; SANDY CLAY or CLAYEY SAND; SANDY SILT or SILTY SAND; SILTY CLAY; CLAYEY SILT; PEAT and/or ORGANIC MATTER; FILL MATERIAL; IGNEOUS ROCK; SEDIMENTARY ROCK; METAMORPHIC

NOTE: Classification of earth material as shown on this sheet is based upon field inspection and is not to be construed to imply mechanical analysis.

LEGEND OF BORING OPERATIONS

2 1/4" CONE PENETROMETER; SAMPLE BORING (DRY); ROTARY SAMPLE BORING (WET); AUGER BORING (DRY); TEST PIT; DIAMOND CORE BORING; JET BORING; ELECTRONIC CONE PENETROMETER

SAMPLE BORING (DRY) — ROTARY SAMPLE BORING (WET) — 2 1/4" CONE PENETRATION BORING — ELECTRONIC CONE PENETROMETER TEST

Cone Penetrometer dimensions and testing procedures are in accordance with ASTM standard D 5441-93, or as noted.

(For Boring Location See Plan, LOTB Sheet 1 of 3)

205' Lt Sta 107+40 "ALN1" Line

SI-17 (P-1)

437.00'

Elev.	REC	RQD
435	86%	0%
430	64%	0%
425	94%	0%
420	93%	0%
	90%	0%
415	92%	10%
410	86%	0%
405	75%	0%
400	70%	0%
395	90%	0%
390	97%	21%
	100%	0%
385	90%	0%
	90%	0%
380	92%	0%
375	96%	0%
370	88%	0%
	100%	67%
365	76%	0%
360	100%	0%
	NR*	NR*
355	96%	10%
350	100%	16%
345	100%	NR*
340	86%	25%

CLAY (CH); firm to stiff; brown; moist; plant debris at top; grades to CLAY (CH); gray-brown; angular fragments of ARGILLITE and GRAYWACKE up to 1/2 ".

Melange; angular fragments of GRAYWACKE in ARGILLITE matrix; gray to gray-brown. GRAYEACKE; moderately weathered; hard to very hard; intensely to very intensely fractured; healed fractures, (Calcite), (irregular, ehastaneszing). ARGILLITE; intensely to very intensely weathered; soft to moderatly hard; very intensely fractured; sheared.

Argillite; gray to black; intensely weathered; moderately soft to moderately hard; sheared; weatheres to CLAY (CL); modeerately soft to firm; gray; medium plasticity; BOULDERS (Graywacke); rarely larger than 14".

-thin, open fractures; filled with SANDY CLAY (CL); yellow-brown; low plasticity.

Graywacke; gray; moderately weathered; intensely fractured, healed with Calcite.

Graywacke; gray to dark gray; moderately weathered; very hard; moderately to intensely fractured at all angles, tight fractures, rough, clean, many healed with Calcite; thin shear zones (~1") at 23' depth.

Argillite with minor Graywacke. ARGILLITE; black; fresh to moderately weathered; moderately soft to moderately hard; moderately to very intensely fractured; ARGILLITE appears to decompose to gray fat CLAY where shearing is greatest; GRAYWACKE lenzes (~2-3"), wint healed fractures (CALCITE). GRAYWACKE; gray to dark gray; moderately weathered; very hard; moderately to intensely fractured at all angles, tight fractures, fough, clean, many healed with CALCITE; thin shear zones (~1").

-less GRAYWACKE; more pervasively sheared throughout; GRAYWACKE is only present in the top 6".

Failure plane.

Graywacke clasts; gray to greenish gray; moderately weathered; moderately hard; very intensely fractured; in an ARGILLITE matrix; black; moderately to intensely weathered; moderately soft to soft.

-well graded.

-single large clast; grades to ARGILLITE; intensely weathered; soft to medium soft; grades to GRAYWACKE clast; grades to ARGILLITE.

-smaller GRAYWACKE clasts (~1/4 ").

-GRAYWACKE in an ARGILLITE matrix; GRAYWACKE clasts (up to 2").

-GRAYWACKE; gray to green-gray; moderately to intensely weathered; moderately hard to hard; very intensely fractured; sheared; healed fractures; clasts (1/4 " to 3"). ARGILLITE; black; intensely to very intensely weathered; soft to medium soft; sheared.

-more green.

-GRAYWACKE is moderately fractured.

-increased quanity of small GRAYWACKE clasts.

-GRAYWAKE is intensely fractured.

-clasts (<1/4").

-sheared, little to no clasts.

Argillite; black; intensely to very intensely weathered; soft to moderately soft; sheared.

-moderately to very intensely weathered; soft to moderately hard; moderately fractured; sheared; shear zones weather to CLAY; soft; gray to dark gray; moist; medium plasticity; little to no GRAYWACKE.

Graywacke; length (3/4 "); gray to green-gray; slightly weathered; hard; intensely fractured; few/little healed fractures.

Argillite and Graywacke; ARGILLITE; black; moderately to very intensely weathered, soft to moderately hard; moderately fractured; sheared; shear zones weathered to CLAY; soft; gray to dark gray; moist; medium plasticity. GRAYWACKE; intensely to slightly fractured.

05-22-01
Terminated at El 338.00'

PROFILE
HOR. 1"=10'
VER. 1"= 5'

107+00 108+00 109+00

ENGINEERING SERVICE CENTER — STRUCTURE FOUNDATIONS

DRAWN BY M. Reynolds 09/10
CHECKED BY A. Kaddoura
FIELD INVESTIGATION BY: C. Risden

STATE OF CALIFORNIA
DEPARTMENT OF TRANSPORTATION
DIVISION OF ENGINEERING SERVICES
OFFICE OF GEOTECHNICAL DESIGN BRANCH

BRIDGE NO. 20E0063
POST MILE 52.1/52.5

TIEBACK WALL
LOG OF TEST BORINGS 2 of 3

ORIGINAL SCALE IN INCHES FOR REDUCED PLANS 0 1 2 3

DISREGARD PRINTS BEARING EARLIER REVISION DATES

REVISION DATES (PRELIMINARY STAGE ONLY)

SHEET 8 OF 9

CU 06-244
EA 4S6500

FILE => 20E0063-Z-TB02.dgn

DIST.	COUNTY	ROUTE	POST MILES TOTAL PROJECT	SHEET NO.	TOTAL SHEETS
04	Son	101	R52.1/R52.5	40	41

REGISTERED ENGINEER - CIVIL
11-04-10
Ali Kaddoura
6-6-11
PLANS APPROVAL DATE

REGISTERED PROFESSIONAL ENGINEER — Ali K. Kaddoura — No. 55710 — Exp. 12-31-12 — CIVIL — STATE OF CALIFORNIA

The State of California or its officers or agents shall not be responsible for the accuracy or completeness of electronic copies of this plan sheet.

USERNAME => trpierce DATE PLOTTED => 07-JUN-2011 TIME PLOTTED => 10:29

DIST.	COUNTY	ROUTE	POST MILES TOTAL PROJECT	SHEET NO.	TOTAL SHEETS
04	Son	101	R52.1/R52.5	41	41

Ali Kaddoura 11-04-10
REGISTERED ENGINEER - CIVIL

6-6-11
PLANS APPROVAL DATE

REGISTERED PROFESSIONAL ENGINEER
Ali K. Kaddoura
No. 55710
Exp. 12-31-12
CIVIL
STATE OF CALIFORNIA

The State of California or its officers or agents shall not be responsible for the accuracy or completeness of electronic copies of this plan sheet.

NOTE: 1. The indicated numbers for Standard Penetration Tests, (SPT), are the uncorrected field values obtained during drilling.

2. The SPT for borings SH-1 and SH-2 were performed using an automatic drop safety hammer with 140 lbs./ 30 in.

(For Boring Location See Plan, LOTB Sheet 1 of 3)

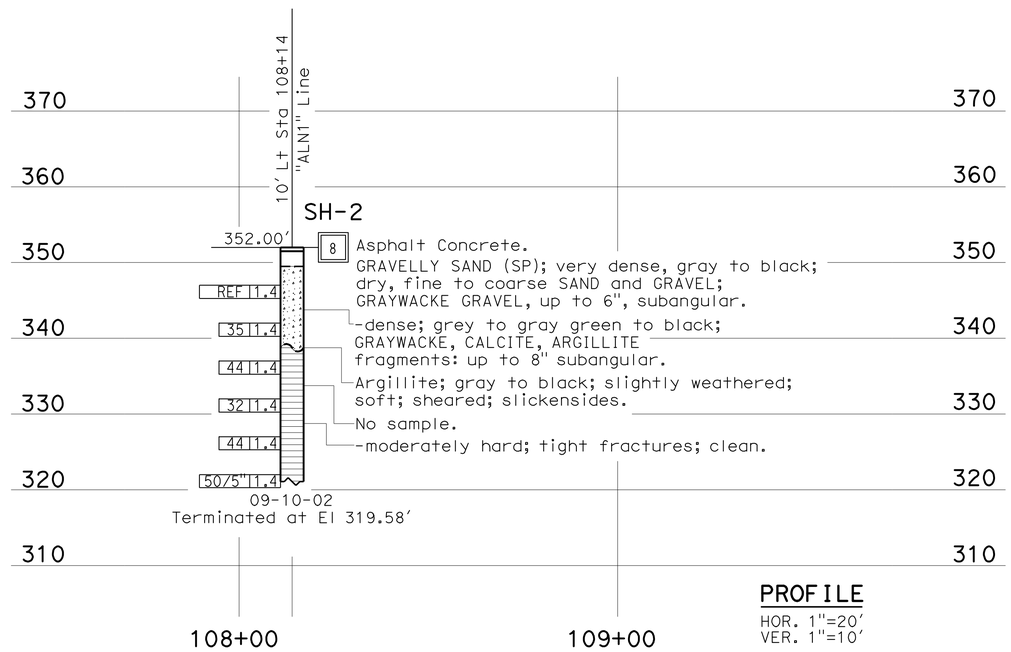

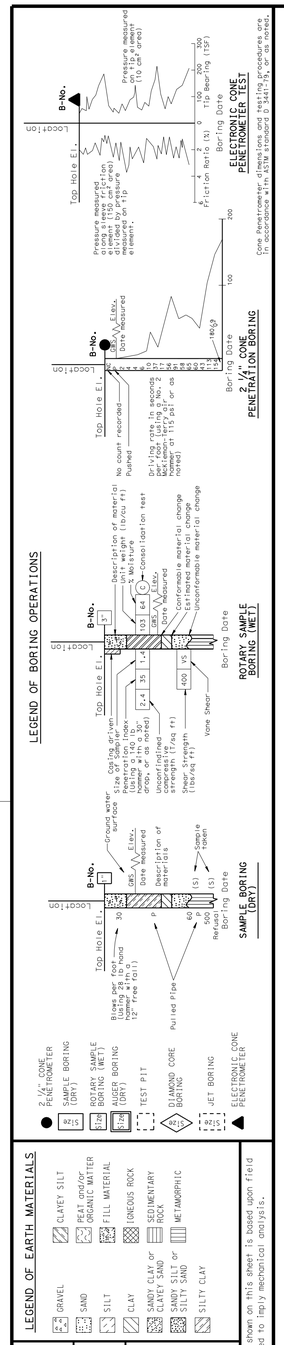

LEGEND OF EARTH MATERIALS

GRAVEL, SAND, SILT, CLAY, SANDY CLAY or CLAYEY SAND, SANDY SILT or SILTY SAND, SILTY CLAY, CLAYEY SILT, PEAT and/or ORGANIC MATTER, FILL MATERIAL, IGNEOUS ROCK, SEDIMENTARY ROCK, METAMORPHIC

CONSISTENCY CLASSIFICATION FOR SOILS
According to the Standard Penetration Test

SPT N-Value (Blows/ Foot)	Granular	SPT N-Value (Blows/ Foot)	Cohesive
0-4	Very Loose	<2	Very Soft
5-10	Loose	2-4	Soft
11-30	Medium Dense	5-8	Medium stiff
31-50	Dense	9-15	Stiff
>50	Very Dense	16-30	Very Stiff
>70	Very Dense	31-60	Hard
		>60	Very Hard

NOTE: Classification of earth material as shown on this sheet is based upon field inspection and is not to be construed to imply mechanical analysis.

ENGINEERING SERVICE CENTER	STRUCTURE FOUNDATIONS
DRAWN BY	M. Reynolds 09/10
CHECKED BY	A. Kaddoura

FIELD INVESTIGATION BY: C. Risden

STATE OF CALIFORNIA DEPARTMENT OF TRANSPORTATION

DIVISION OF ENGINEERING SERVICES OFFICE OF GEOTECHNICAL DESIGN BRANCH

BRIDGE NO. 20E0063
POST MILE 52.1/52.5

TIEBACK WALL
LOG OF TEST BORINGS 3 of 3

TL 6052 (CADD 3/24/97)

ORIGINAL SCALE IN INCHES FOR REDUCED PLANS 0 1 2 3

CU06-244
EA4S6500

DISREGARD PRINTS BEARING EARLIER REVISION DATES

REVISION DATES (PRELIMINARY STAGE ONLY)

SHEET 9 OF 9

FILE => 20e0063-z-ltb03.dgn

USERNAME => tripierce DATE PLOTTED => 07-JUN-2011 TIME PLOTTED => 10:30