Dist	COUNTY	ROUTE	POST MILES TOTAL PROJECT	SHEET No.	TOTAL SHEETS
04	Son	1	34.3/34.7	1	57

ACSTP-P001(582)E

STATE OF CALIFORNIA
DEPARTMENT OF TRANSPORTATION

PROJECT PLANS FOR CONSTRUCTION ON
STATE HIGHWAY

IN SONOMA COUNTY
NEAR FORT ROSS FROM 0.5 MILE NORTH OF FORT ROSS ROAD TO 0.5 MILE SOUTH OF TIMBER COVE ROAD

TO BE SUPPLEMENTED BY STANDARD PLANS DATED 2010

INDEX OF PLANS

SHEET No.	DESCRIPTION
1	TITLE AND LOCATION MAP
2-7	TYPICAL CROSS SECTIONS
8-9	LAYOUTS
10	PROFILES AND SUPERELEVATION DIAGRAM
11-13	CONSTRUCTION DETAILS
14-16	DRAINAGE PROFILES, DETAILS AND QUANTITIES
17	CONSTRUCTION AREA SIGNS
18-20	EROSION CONTROL LEGEND, PLAN, DETAILS AND QUANTITIES
21-23	STAGE CONSTRUCTION AND TRAFFIC HANDLING PLANS AND QUANTITIES
24	PAVEMENT DELINEATION AND SIGN PLANS AND QUANTITIES
25	SUMMARY OF QUANTITIES
26-36	SIGNAL, LIGHTING, TRAFFIC OPERATION SYSTEM, AND DETAIL
37-47	REVISED STANDARD PLANS

STRUCTURE PLANS

48-57	FORT ROSS RETAINING WALL Br No. 20E0064

THE STANDARD PLANS LIST APPLICABLE TO THIS CONTRACT IS INCLUDED IN THE NOTICE TO BIDDERS AND SPECIAL PROVISIONS BOOK.

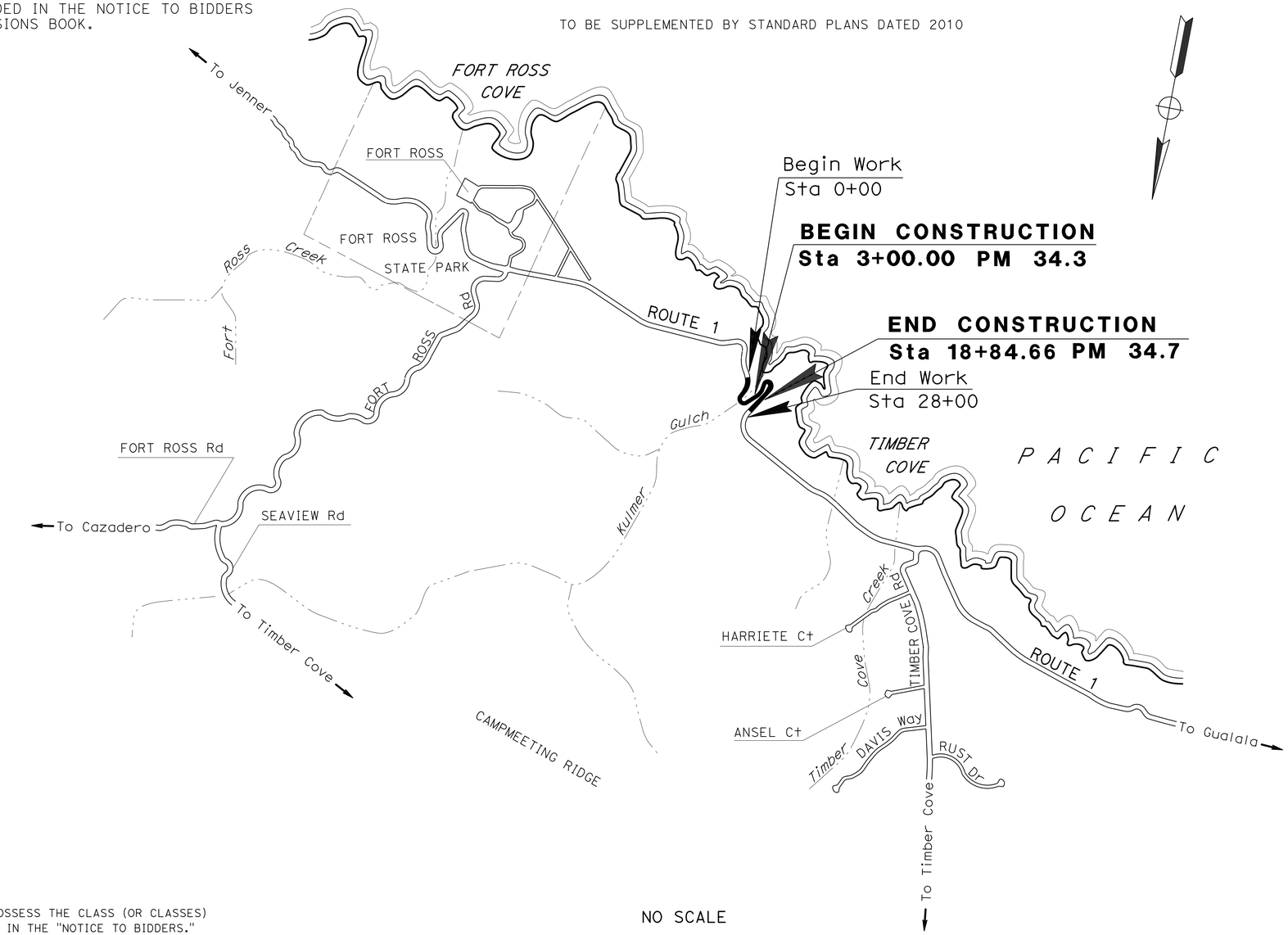

LOCATION MAP

Ali Alqatami 03-21-13
PROJECT ENGINEER DATE
REGISTERED CIVIL ENGINEER

July 1, 2013
PLANS APPROVAL DATE

REGISTERED PROFESSIONAL ENGINEER ALI ALQATAMI No. 52024 Exp. 12-31-14 CIVIL STATE OF CALIFORNIA

THE STATE OF CALIFORNIA OR ITS OFFICERS OR AGENTS SHALL NOT BE RESPONSIBLE FOR THE ACCURACY OR COMPLETENESS OF SCANNED COPIES OF THIS PLAN SHEET.

THE CONTRACTOR SHALL POSSESS THE CLASS (OR CLASSES) OF LICENSE AS SPECIFIED IN THE "NOTICE TO BIDDERS."

NO SCALE

CONTRACT No.	04-4S6204
PROJECT ID	0414000074

PROJECT MANAGER: JAY HAGHPARAST
DESIGN ENGINEER: ALI ALQATAMI

LAST REVISION 03-21-13 | DATE PLOTTED => 14-JAN-2014 | TIME PLOTTED => 05:43

Dist	COUNTY	ROUTE	POST MILES TOTAL PROJECT	SHEET No.	TOTAL SHEETS
04	Son	1	34.3/34.7	2	57

Ali Alqatami 03-21-13
REGISTERED CIVIL ENGINEER DATE

7-1-13
PLANS APPROVAL DATE

REGISTERED PROFESSIONAL ENGINEER ALI ALQATAMI No. 52024 Exp. 12-31-14 CIVIL STATE OF CALIFORNIA

THE STATE OF CALIFORNIA OR ITS OFFICERS OR AGENTS SHALL NOT BE RESPONSIBLE FOR THE ACCURACY OR COMPLETENESS OF SCANNED COPIES OF THIS PLAN SHEET.

NOTES:

1. FOR ACCURATE RIGHT OF WAY DATA, CONTACT RIGHT OF WAY ENGINEERING AT DISTRICT OFFICE.
2. DIMENSIONS OF THE STRUCTURAL SECTIONS ARE SUBJECT TO TOLERANCES SPECIFIED IN THE STANDARD SPECIFICATIONS.
3. SUPERELEVATION AS SHOWN OR AS DIRECTED BY THE ENGINEER.
4. FOR EXACT LOCATION AND TYPE OF HMA DIKE, MIDWEST GUARDRAIL SYSTEM (WOOD POST) SEE LAYOUTS AND SUMMARY OF QUANTITIES.

TYPICAL PAVEMENT STRUCTURE SECTIONS

1 — COLD PLANE AC Pvmt (0.33' Max)
1.05' HMA (TYPE A)

2 — Exist
0.06' BONDED WEARING COURSE (Type-O)
0.27' ASPHALT CONCRETE
0.66' CTB
1.60' SUB BASE

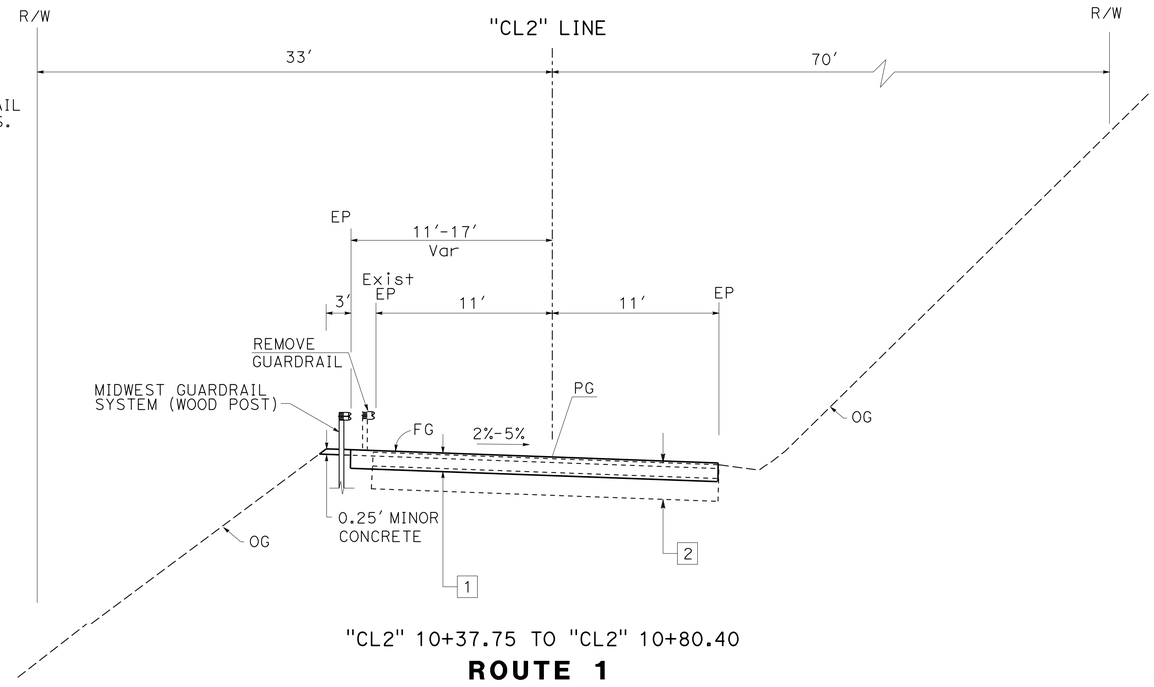

"CL2" 10+37.75 TO "CL2" 10+80.40
ROUTE 1

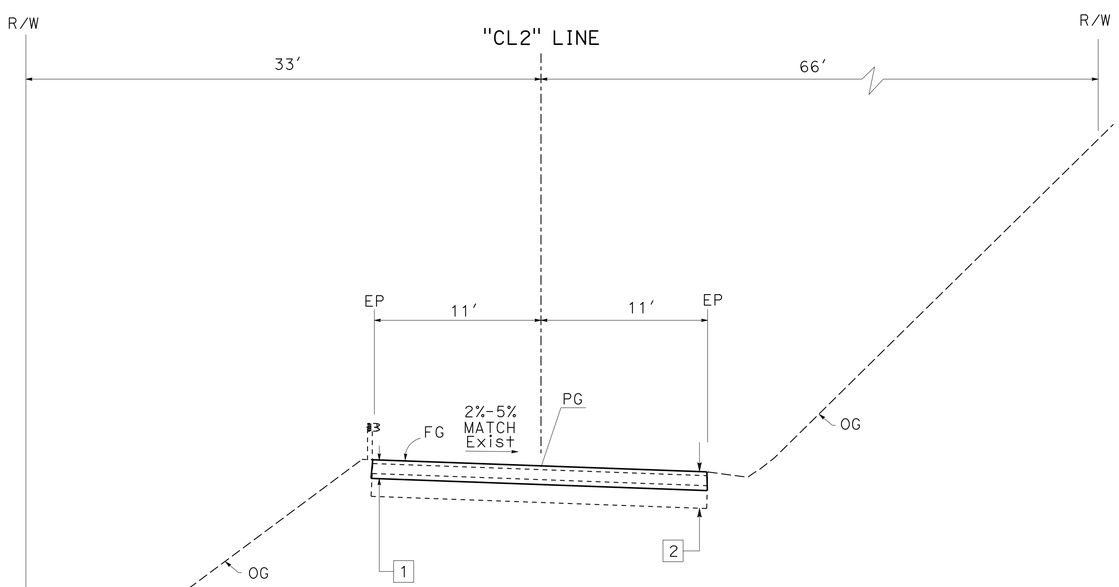

"CL2" 10+00 TO "CL2" 10+37.75
ROUTE 1

DESIGN DESIGNATION

2010 ADT	1903	T%	6.22
2022 ADT	2283	TI	7.5
DHV	237		

TYPICAL CROSS SECTIONS
NO SCALE

X-1

STATE OF CALIFORNIA - DEPARTMENT OF TRANSPORTATION
Caltrans® 06-DESIGN

FUNCTIONAL SUPERVISOR: RORY QUINCE
CALCULATED-DESIGNED BY: FERNANDO MORALES
CHECKED BY: ALI ALQATAMI
REVISED BY: T NGUYEN
DATE REVISED: 3/13

LAST REVISION 03-21-13
DATE PLOTTED => 14-JAN-2014
TIME PLOTTED => 05:43

Dist	COUNTY	ROUTE	POST MILES TOTAL PROJECT	SHEET No.	TOTAL SHEETS
04	Son	1	34.3/34.7	3	57

Ali Alqatami 03-21-13
REGISTERED CIVIL ENGINEER DATE

7-1-13
PLANS APPROVAL DATE

REGISTERED PROFESSIONAL ENGINEER
ALI ALQATAMI
No. 52024
Exp. 12-31-14
CIVIL
STATE OF CALIFORNIA

THE STATE OF CALIFORNIA OR ITS OFFICERS OR AGENTS SHALL NOT BE RESPONSIBLE FOR THE ACCURACY OR COMPLETENESS OF SCANNED COPIES OF THIS PLAN SHEET.

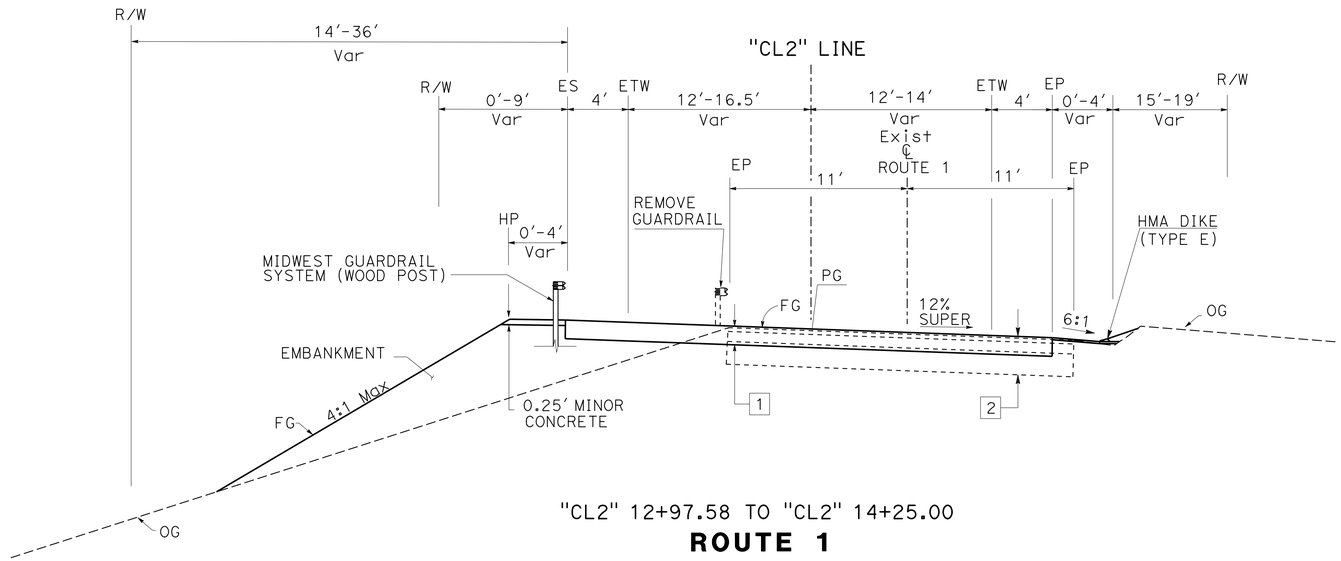

"CL2" 12+97.58 TO "CL2" 14+25.00

ROUTE 1

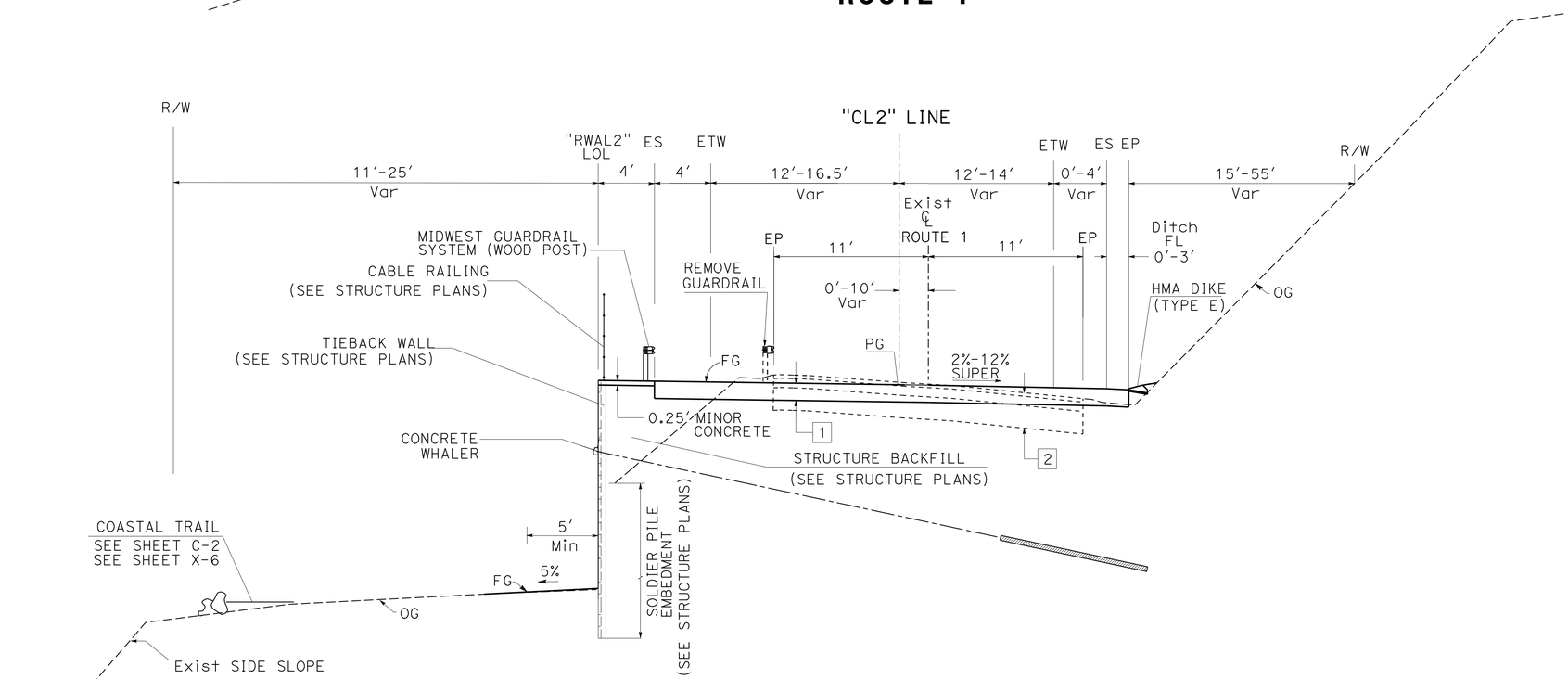

"CL2" 10+80.40 TO "CL2" 12+97.58
"RWAL2" 20+01.30 TO "RWAL2" 22+66.30

ROUTE 1

TYPICAL CROSS SECTIONS

NO SCALE

X-2

REVISED BY	T NGUYEN
DATE REVISED	3/13
CALCULATED-DESIGNED BY	FERNANDO MORALES
CHECKED BY	ALI ALQATAMI
FUNCTIONAL SUPERVISOR	RORY QUINCE

STATE OF CALIFORNIA - DEPARTMENT OF TRANSPORTATION
Caltrans
06-DESIGN

LAST REVISION 03-21-13
DATE PLOTTED => 14-JAN-2014
TIME PLOTTED => 05:43

Dist	COUNTY	ROUTE	POST MILES TOTAL PROJECT	SHEET No.	TOTAL SHEETS
04	Son	1	34.3/34.7	4	57

Ali Alqatami 03-21-13
REGISTERED CIVIL ENGINEER DATE

7-1-13
PLANS APPROVAL DATE

REGISTERED PROFESSIONAL ENGINEER
ALI ALQATAMI
No. 52024
Exp. 12-31-14
CIVIL
STATE OF CALIFORNIA

THE STATE OF CALIFORNIA OR ITS OFFICERS OR AGENTS SHALL NOT BE RESPONSIBLE FOR THE ACCURACY OR COMPLETENESS OF SCANNED COPIES OF THIS PLAN SHEET.

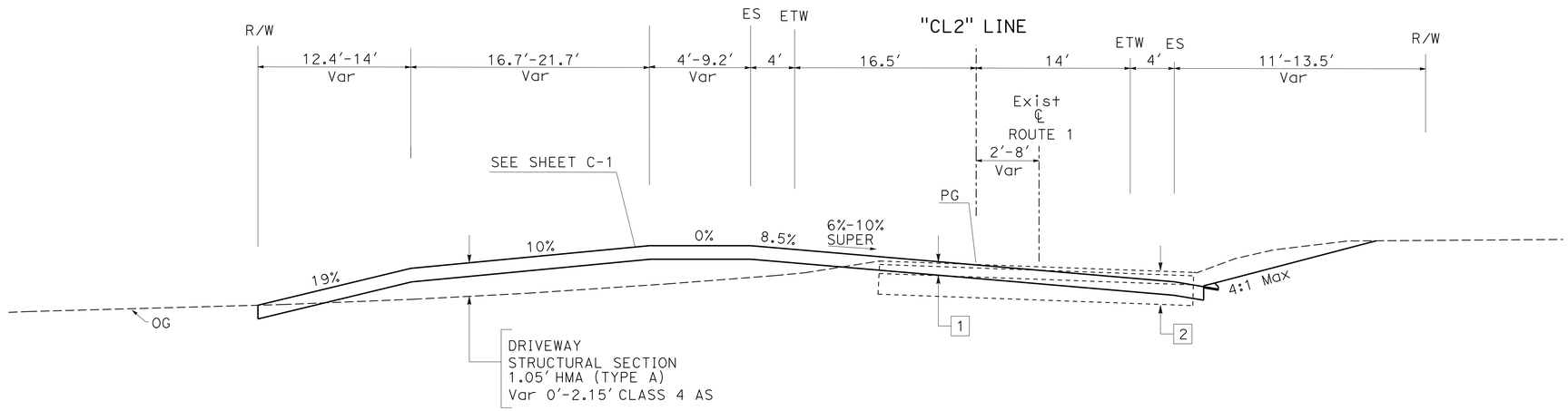

"CL2" 14+98.72 TO "CL2" 15+78.10
WINDEMERE POINT DRIVEWAY ACCESS
ROUTE 1

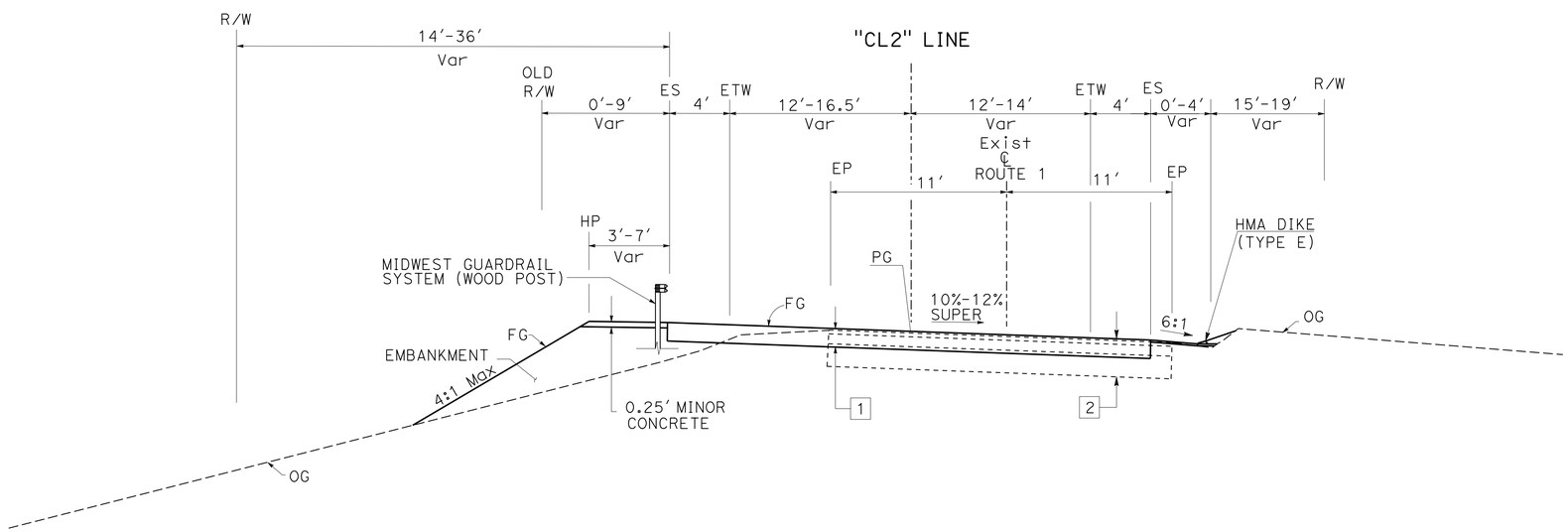

"CL2" 14+25.00 TO "CL2" 14+98.72
ROUTE 1

TYPICAL CROSS SECTIONS
NO SCALE

X-3

REVISED BY	DATE REVISED
T NGUYEN	3/13

FERNANDO MORALES
ALI ALQATAMI
CALCULATED-DESIGNED BY
CHECKED BY
FUNCTIONAL SUPERVISOR
RORY QUINCE

STATE OF CALIFORNIA - DEPARTMENT OF TRANSPORTATION
Caltrans
06-DESIGN

LAST REVISION 03-21-13
DATE PLOTTED => 14-JAN-2014
TIME PLOTTED => 05:43

Dist	COUNTY	ROUTE	POST MILES TOTAL PROJECT	SHEET No.	TOTAL SHEETS
04	Son	1	34.3/34.7	5	57

Ali Alqatami 03-21-13
REGISTERED CIVIL ENGINEER DATE

7-1-13
PLANS APPROVAL DATE

REGISTERED PROFESSIONAL ENGINEER ALI ALQATAMI No. 52024 Exp. 12-31-14 CIVIL STATE OF CALIFORNIA

THE STATE OF CALIFORNIA OR ITS OFFICERS OR AGENTS SHALL NOT BE RESPONSIBLE FOR THE ACCURACY OR COMPLETENESS OF SCANNED COPIES OF THIS PLAN SHEET.

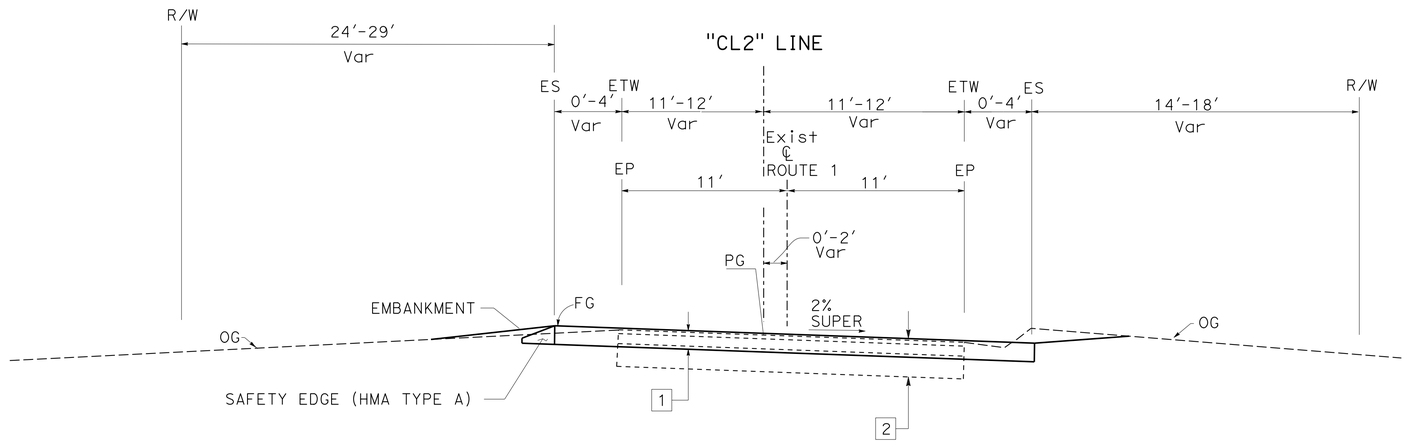

"CL2" 17+03.09 TO "CL2" 18+57.92

ROUTE 1

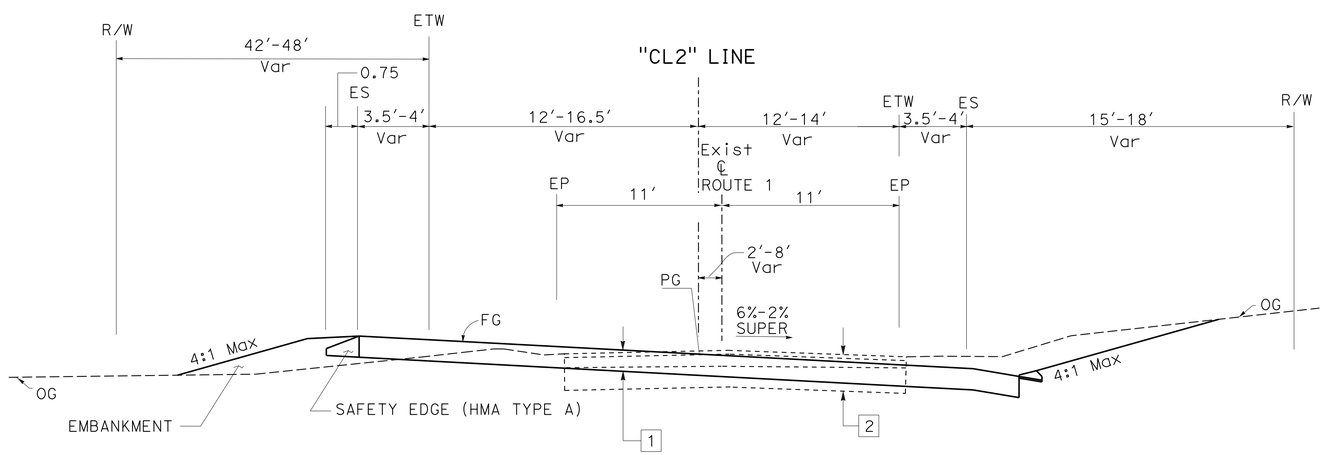

"CL2" 15+78.10 TO "CL2" 17+03.09

ROUTE 1

TYPICAL CROSS SECTIONS

NO SCALE

X-4

STATE OF CALIFORNIA - DEPARTMENT OF TRANSPORTATION
Caltrans® 06-DESIGN

FUNCTIONAL SUPERVISOR: RORY QUINCE

CALCULATED-DESIGNED BY: FERNANDO MORALES
CHECKED BY: ALI ALQATAMI

REVISED BY: T NGUYEN
DATE REVISED: 3/13

LAST REVISION 03-21-13
DATE PLOTTED => 14-JAN-2014
TIME PLOTTED => 05:43

Dist	COUNTY	ROUTE	POST MILES TOTAL PROJECT	SHEET No.	TOTAL SHEETS
04	Son	1	34.3/34.7	6	57

Ali Alqatami 03-21-13
REGISTERED CIVIL ENGINEER DATE

7-1-13
PLANS APPROVAL DATE

REGISTERED PROFESSIONAL ENGINEER
ALI ALQATAMI
No. 52024
Exp. 12-31-14
CIVIL
STATE OF CALIFORNIA

THE STATE OF CALIFORNIA OR ITS OFFICERS OR AGENTS SHALL NOT BE RESPONSIBLE FOR THE ACCURACY OR COMPLETENESS OF SCANNED COPIES OF THIS PLAN SHEET.

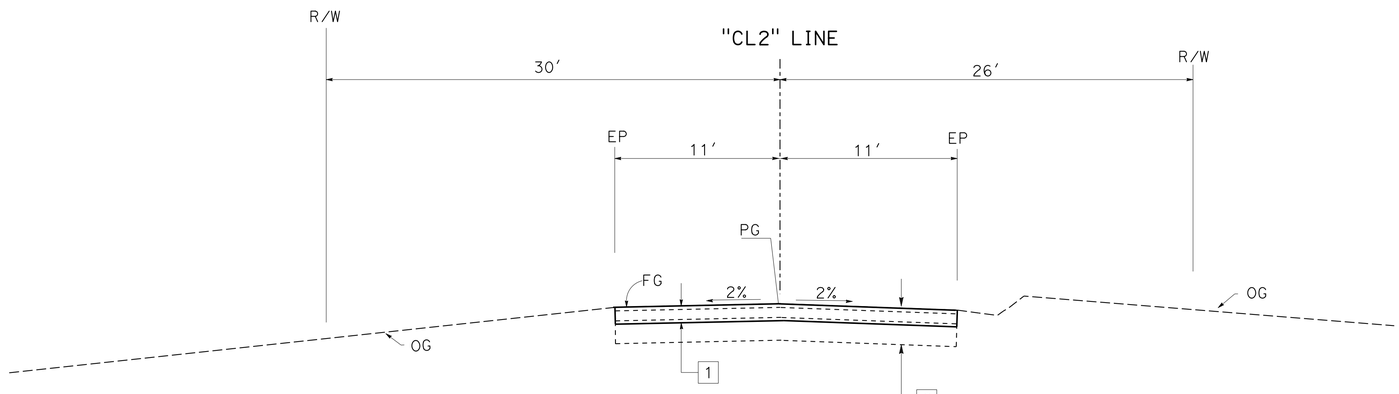

"CL2" 18+57.92 TO "CL2" 18+84.65

ROUTE 1

TYPICAL CROSS SECTIONS

NO SCALE

X-5

STATE OF CALIFORNIA - DEPARTMENT OF TRANSPORTATION
Caltrans® **06-DESIGN**

FUNCTIONAL SUPERVISOR: RORY QUINCE

CALCULATED-DESIGNED BY: FERNANDO MORALES
CHECKED BY: ALI ALQATAMI

REVISED BY: T NGUYEN
DATE REVISED: 3/13

LAST REVISION 03-21-13 | DATE PLOTTED => 14-JAN-2014 | TIME PLOTTED => 05:43

Dist	COUNTY	ROUTE	POST MILES TOTAL PROJECT	SHEET No.	TOTAL SHEETS
04	Son	1	34.3/34.7	7	57

Ali Alqatami 03-21-13
REGISTERED CIVIL ENGINEER DATE

7-1-13
PLANS APPROVAL DATE

REGISTERED PROFESSIONAL ENGINEER
ALI ALQATAMI
No. 52024
EXP. 12-31-14
CIVIL
STATE OF CALIFORNIA

THE STATE OF CALIFORNIA OR ITS OFFICERS OR AGENTS SHALL NOT BE RESPONSIBLE FOR THE ACCURACY OR COMPLETENESS OF SCANNED COPIES OF THIS PLAN SHEET.

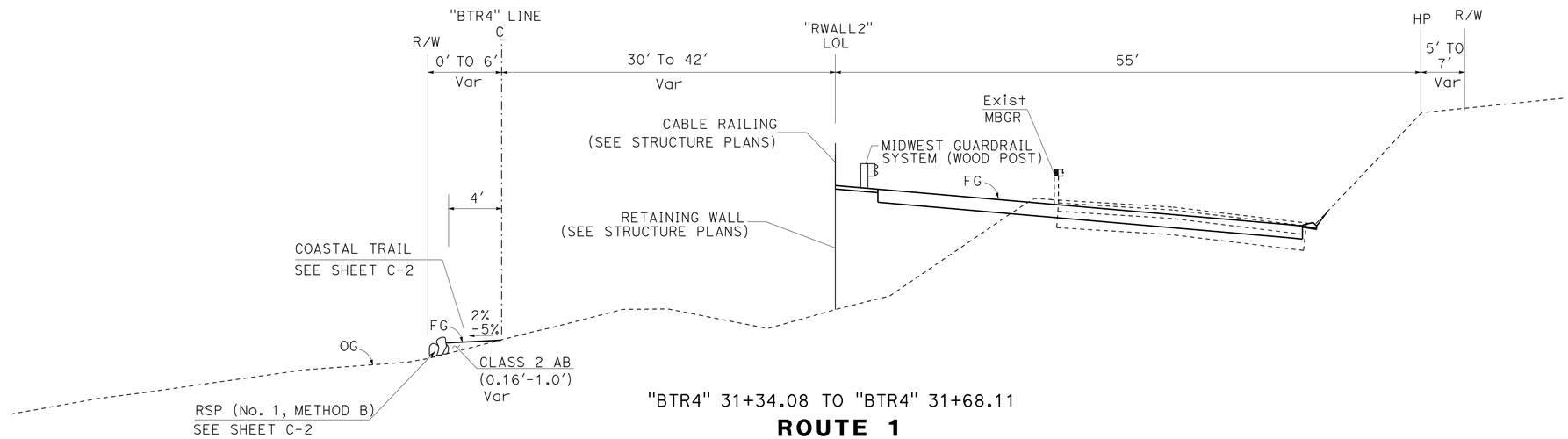

"BTR4" 31+34.08 TO "BTR4" 31+68.11

ROUTE 1

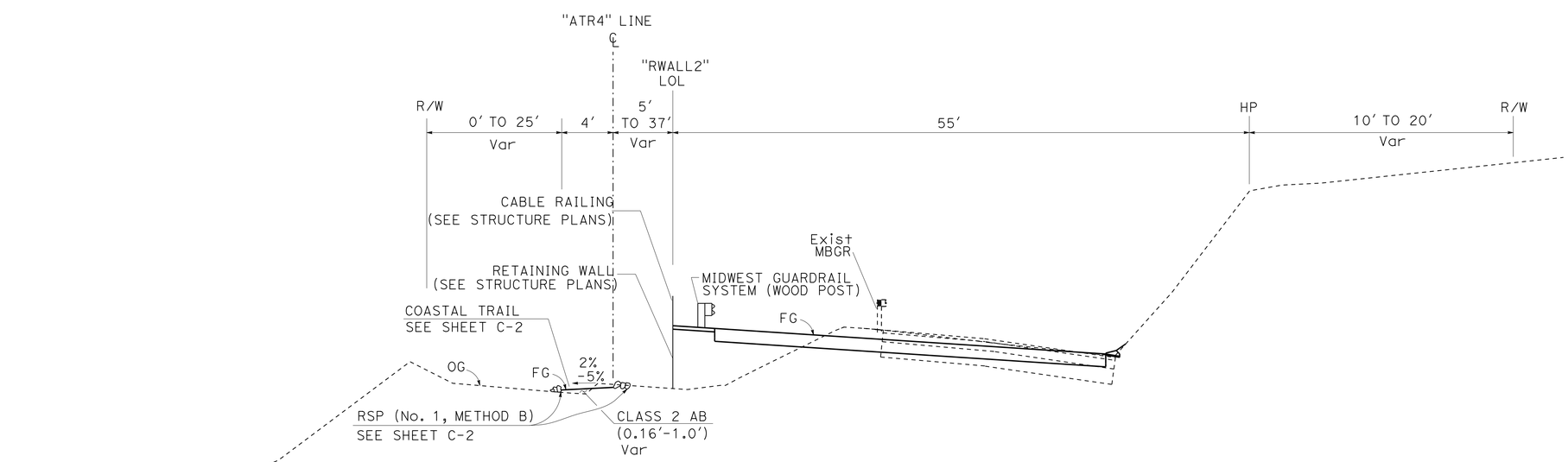

"ATR4" 30+24.69 TO "ATR4" 30+71.62

ROUTE 1

TYPICAL CROSS SECTIONS

NO SCALE

X-6

STATE OF CALIFORNIA - DEPARTMENT OF TRANSPORTATION
Caltrans® 06-DESIGN

FUNCTIONAL SUPERVISOR: RORY QUINCE

CALCULATED-DESIGNED BY: FERNANDO MORALES
CHECKED BY: ALI ALQATAMI

REVISED BY: T NGUYEN
DATE REVISED: 3/13

LAST REVISION 03-21-13
DATE PLOTTED => 14-JAN-2014
TIME PLOTTED => 05:43

Dist	COUNTY	ROUTE	POST MILES TOTAL PROJECT	SHEET No.	TOTAL SHEETS
04	Son	1	34.3/34.7	8	57

Ali Alqatami 03-21-13
REGISTERED CIVIL ENGINEER DATE

7-1-13
PLANS APPROVAL DATE

REGISTERED PROFESSIONAL ENGINEER ALI ALQATAMI No. 52024 Exp. 12-31-14 CIVIL STATE OF CALIFORNIA

THE STATE OF CALIFORNIA OR ITS OFFICERS OR AGENTS SHALL NOT BE RESPONSIBLE FOR THE ACCURACY OR COMPLETENESS OF SCANNED COPIES OF THIS PLAN SHEET.

NOTES:

1. FOR ACCURATE RIGHT OF WAY DATA, CONTACT RIGHT OF WAY ENGINEERING AT THE DISTRICT OFFICE.
2. FOR TRAIL DETAILS, SEE CONSTRUCTION DETAILS SHEET.

LEGEND:

- TRAIL SECTION BY OTHERS
- SOLDIER PILE RETAINING WALL
- MIDWEST GUARDRAIL SYSTEM (WOOD POST)
- 1.05' HMA (TYPE A) Var 0'-2.15' CLASS 4 AS PAVE DRIVEWAY (SEE SHEET C-1)
- TRAIL AREA CONSTRUCTION (TRAIL STEPS, CLASS 4 AB, AND RSP No. 1, METHOD B) SEE SHEET C-2 FOR DETAILS
- DRAINAGE SYSTEM No.
- DRAINAGE UNIT
- TRAIL STEPS

CURVE DATA

No.	R	Δ	T	L
1	124.48'	38°52'42.10"	43.94'	84.47'
2	99.80'	87°22'18.66"	95.42'	152.34'
3	14.00'	82°58'52"	12.38'	20.28'
4	10.00'	84°46'22"	8.81'	14.28'
5	10.00'	93°38'17"	10.28'	15.77'

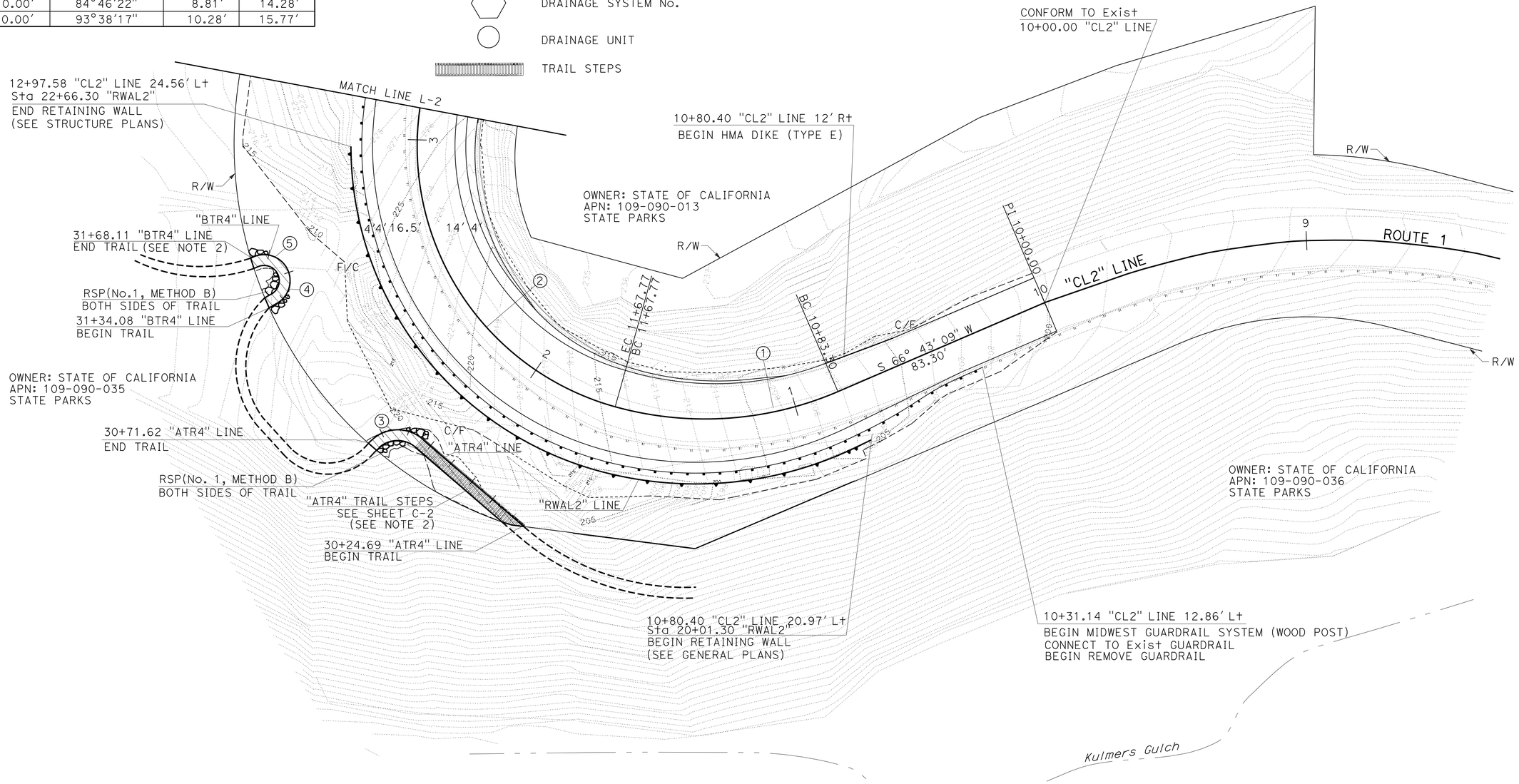

LAYOUT L-1

SCALE: 1" = 20'

REVISED BY	DATE REVISED
T NGUYEN	3/13

CALCULATED-DESIGNED BY: FERNANDO MORALES
CHECKED BY: ALI ALQATAMI
FUNCTIONAL SUPERVISOR: RORY QUINCE

STATE OF CALIFORNIA - DEPARTMENT OF TRANSPORTATION
Caltrans
06-DESIGN

LAST REVISION 03-21-13 | DATE PLOTTED => 14-JAN-2014 | TIME PLOTTED => 05:43

Dist	COUNTY	ROUTE	POST MILES TOTAL PROJECT	SHEET No.	TOTAL SHEETS
04	Son	1	34.3/34.7	9	57

Ali Alqatami 03-21-13
REGISTERED CIVIL ENGINEER DATE

7-1-13
PLANS APPROVAL DATE

REGISTERED PROFESSIONAL ENGINEER
ALI ALQATAMI
No. 52024
Exp. 12-31-14
CIVIL
STATE OF CALIFORNIA

THE STATE OF CALIFORNIA OR ITS OFFICERS OR AGENTS SHALL NOT BE RESPONSIBLE FOR THE ACCURACY OR COMPLETENESS OF SCANNED COPIES OF THIS PLAN SHEET.

CURVE DATA

No.	R	Δ	T	L
6	115.65′	48°48′3.79"	52.46′	98.51′
7	208.43′	35°31′39.2"	66.77′	129.24′

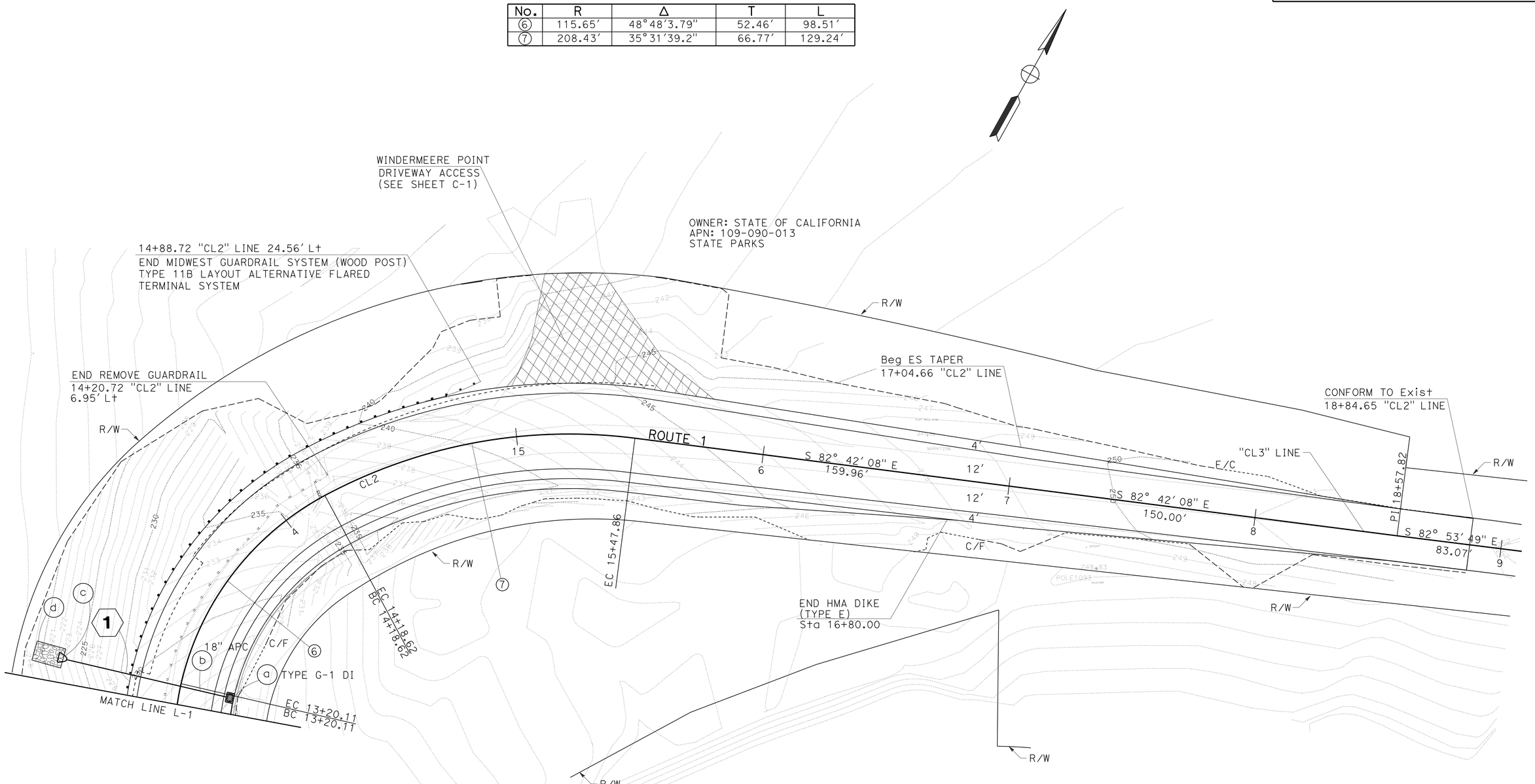

LAYOUT

SCALE: 1" = 20′ **L-2**

STATE OF CALIFORNIA - DEPARTMENT OF TRANSPORTATION
Caltrans® 06-DESIGN

FUNCTIONAL SUPERVISOR: RORY QUINCE
CALCULATED-DESIGNED BY: FERNANDO MORALES
CHECKED BY: ALI ALQATAMI
REVISED BY: T NGUYEN
DATE REVISED: 3/13

LAST REVISION 03-21-13 | DATE PLOTTED => 14-JAN-2014 | TIME PLOTTED => 05:46

Dist	COUNTY	ROUTE	POST MILES TOTAL PROJECT	SHEET No.	TOTAL SHEETS
04	Son	1	34.3/34.7	10	57

Ali Alqatami 03-21-13
REGISTERED CIVIL ENGINEER DATE

7-1-13
PLANS APPROVAL DATE

REGISTERED PROFESSIONAL ENGINEER ALI ALQATAMI No. 52024 Exp. 12-31-14 CIVIL STATE OF CALIFORNIA

THE STATE OF CALIFORNIA OR ITS OFFICERS OR AGENTS SHALL NOT BE RESPONSIBLE FOR THE ACCURACY OR COMPLETENESS OF SCANNED COPIES OF THIS PLAN SHEET.

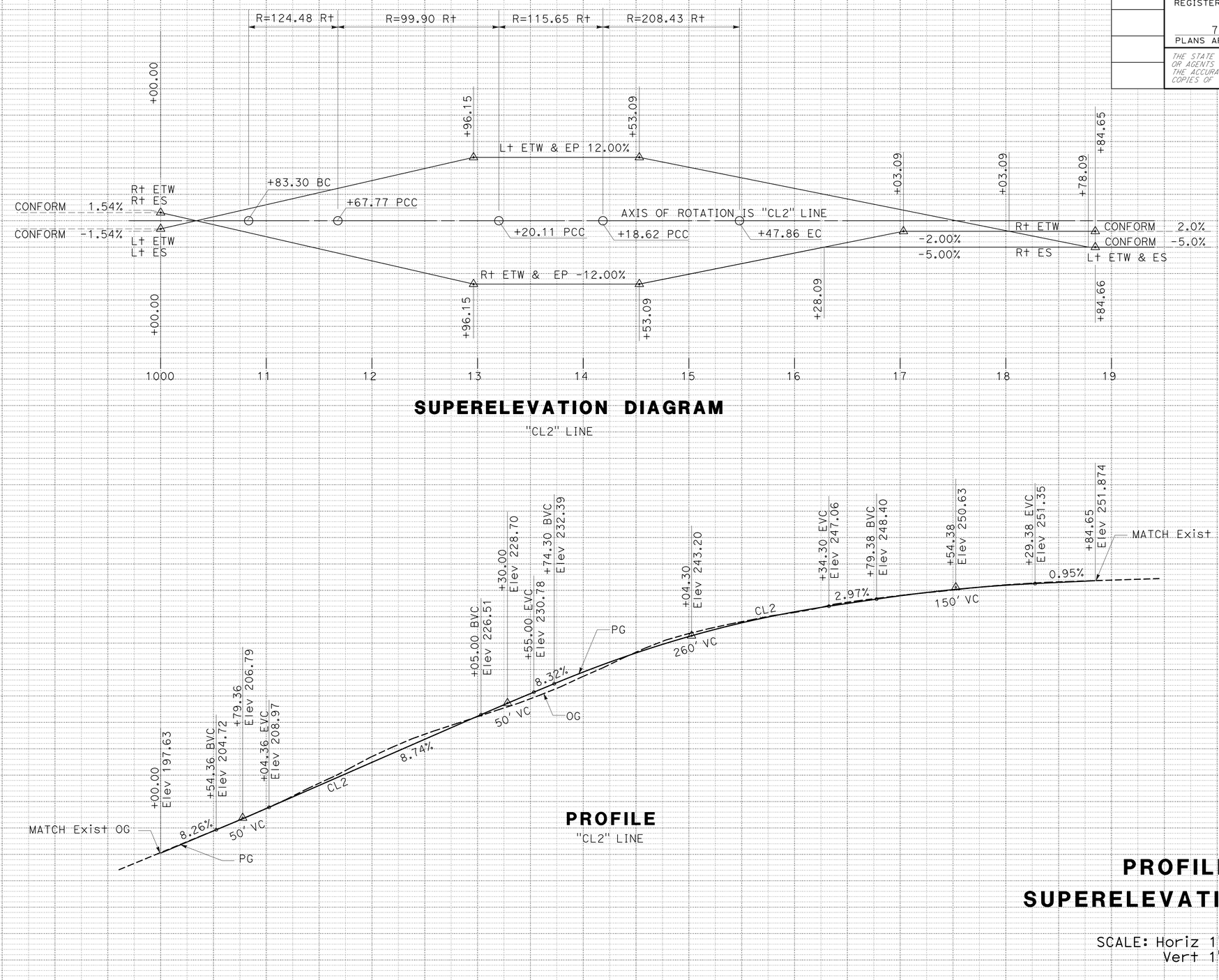

PROFILE AND SUPERELEVATION DIAGRAM

SCALE: Horiz 1" = 25'
Vert 1" = 5'

P-1

REVISED BY	T NGUYEN
DATE REVISED	3/13
CALCULATED-DESIGNED BY	FERNANDO MORALES
CHECKED BY	ALI ALQATAMI
FUNCTIONAL SUPERVISOR	RORY QUINCE

STATE OF CALIFORNIA - DEPARTMENT OF TRANSPORTATION
Caltrans
DESIGN DIVISION

LAST REVISION DATE PLOTTED => 14-JAN-2014
03-21-13 TIME PLOTTED => 05:43

Dist	COUNTY	ROUTE	POST MILES TOTAL PROJECT	SHEET No.	TOTAL SHEETS
04	Son	1	34.3/34.7	11	57

Ali Alqatami 03-21-13
REGISTERED CIVIL ENGINEER DATE

7-1-13
PLANS APPROVAL DATE

REGISTERED PROFESSIONAL ENGINEER
ALI ALQATAMI
No. 52024
Exp. 12-31-14
CIVIL
STATE OF CALIFORNIA

THE STATE OF CALIFORNIA OR ITS OFFICERS OR AGENTS SHALL NOT BE RESPONSIBLE FOR THE ACCURACY OR COMPLETENESS OF SCANNED COPIES OF THIS PLAN SHEET.

NOTES:

1. SEE SUMMARY OF QUANTITIES SHEET FOR LOCATIONS AND OTHER INFORMATION.
2. SEE SHEET X-3 FOR DETAILS.
3. Temporary SIGNAL LOOPS INSTALLATION. SEE SHEET E-3.

LEGEND:

Exist AC PVMT

STAGE 1
0.20′ TEMPORARY HMA (TYPE A) OVERLAY

STAGE 2
1.05′ HMA (TYPE A) DRIVEWAY

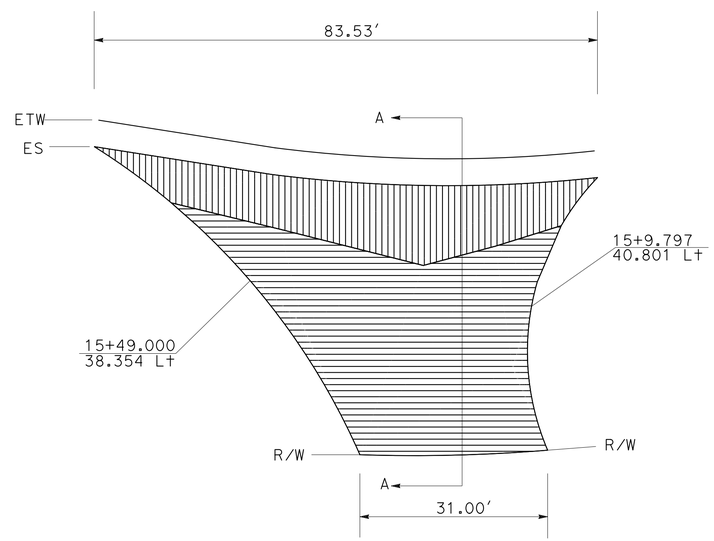

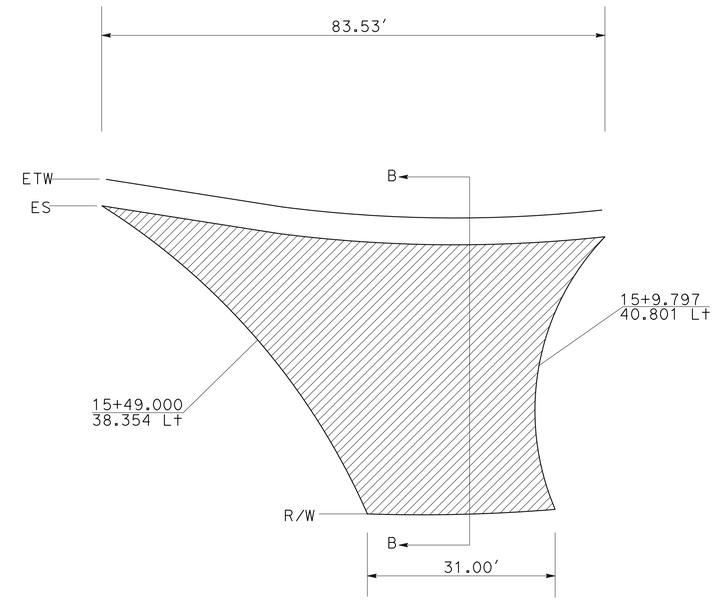

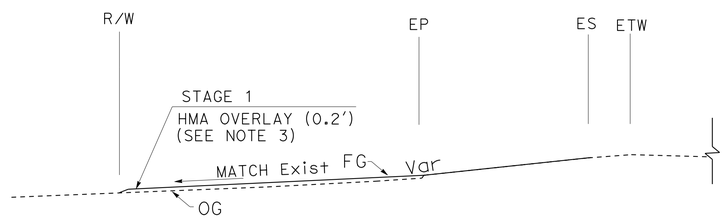

SECTION A-A

DRIVEWAY DETAIL STAGE 1
"CL2" 14+98.82 TO "CL2" 15+77.52

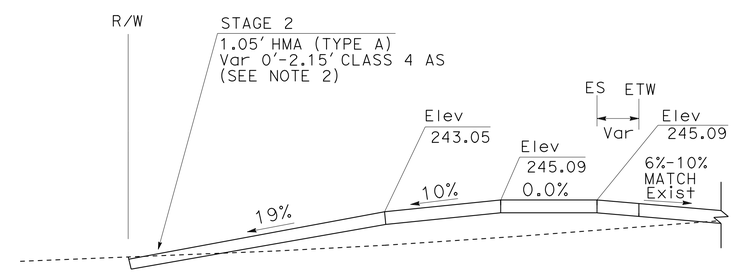

SECTION B-B

DRIVEWAY DETAIL STAGE 2
"CL2" 14+98.82 TO "CL2" 15+77.52

CONSTRUCTION DETAILS
NO SCALE

C-1

REVISED BY	DATE REVISED
T NGUYEN	3/13

CALCULATED-DESIGNED BY: FERNANDO MORALES
CHECKED BY: ALI ALQATAMI
FUNCTIONAL SUPERVISOR: RORY QUINCE

STATE OF CALIFORNIA - DEPARTMENT OF TRANSPORTATION
Caltrans
06-DESIGN

LAST REVISION 03-21-13
DATE PLOTTED => 14-JAN-2014
TIME PLOTTED => 05:44

Dist	COUNTY	ROUTE	POST MILES TOTAL PROJECT	SHEET No.	TOTAL SHEETS
04	Son	1	34.3/34.7	12	57

Ali Alqatami 03-21-13
REGISTERED CIVIL ENGINEER DATE

7-1-13
PLANS APPROVAL DATE

REGISTERED PROFESSIONAL ENGINEER ALI ALQATAMI No. 52024 Exp. 12-31-14 CIVIL STATE OF CALIFORNIA

THE STATE OF CALIFORNIA OR ITS OFFICERS OR AGENTS SHALL NOT BE RESPONSIBLE FOR THE ACCURACY OR COMPLETENESS OF SCANNED COPIES OF THIS PLAN SHEET.

NOTES:

1. EACH STEP COMPONENT CONSISTS OF THREE TIMBERS, TWO HEADERS AND ONE STEP TIMBER. DESIGN TO STACK IN OVERLAPPING PATTERN.
2. END STEPS WHEN SLOPE EQUALS 4:1 OR FLATTER.
3. ROCK PLACEMENT: CONSTRUCT ROCK WALL BUTTRESS ON THE DOWN SLOPE SIDE OF TRAIL WHERE NEEDED FROM STOCKPILE MATERIALS, USE LARGEST ROCKS AVAILABLE IN RSP (No. 1, METHOD B), EMBED 50-75%. ANCHOR AGAINST EXISTING ROCKS WERE AVAILIBLE.
4. EXCAVATE INTO SLOPE TO ALLOW FOR 0.20' Min LAYER, FILL AND COMPACT.
5. NOMINAL DIMENSIONS, ACTUAL VARY.
6. EVENLY NOTCHED FOR OVERLAP WITH HEADER TIMBER (Typ).
7. BACKFILL GAPS BETWEEN TIMBER STEPS WITH CLASS 2 AB.
8. HEADER CUT INTO SLOPE (Typ).
9. SIDESLOPES AND EXISTING VEGETATION TO REMAIN UNDISTURBED TO THE GREATEST EXTENT POSSIBLE.

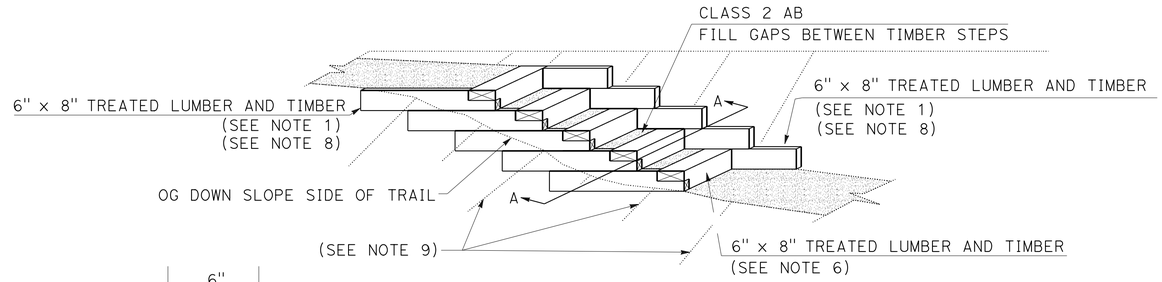

TRAIL STEPS
ISOMETRIC VIEW

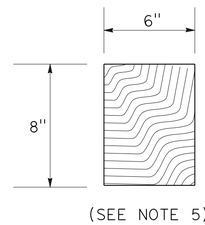

TIMBER SECTION
SECTION B-B

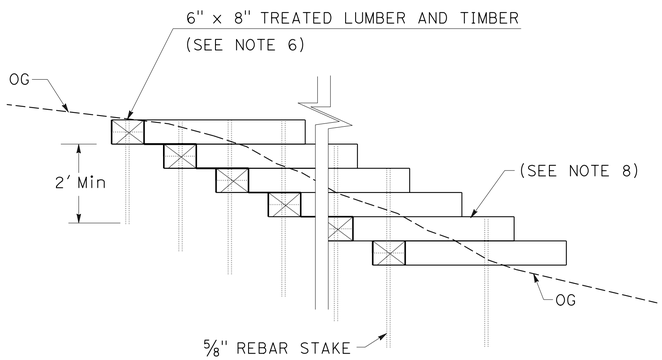

TRAIL STEPS UPSLOPE ELEVATION
"ATR4" 30+24.69 TO "ATR4" 30+71.62

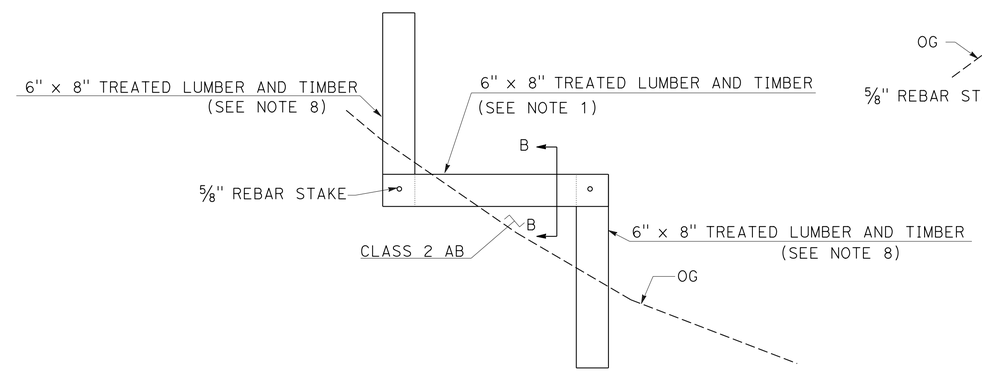

TRAIL STEPS X-SECTION

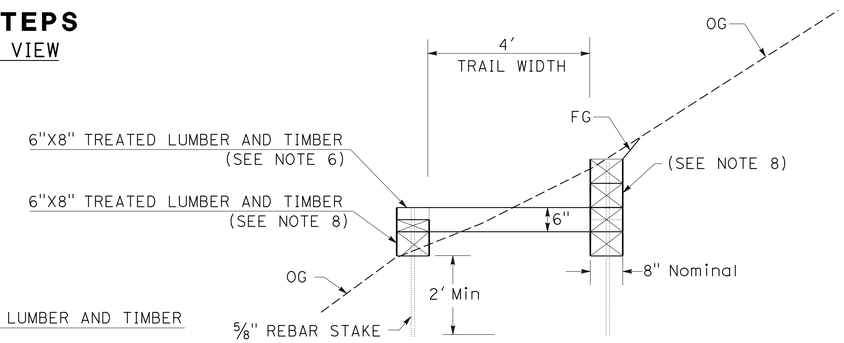

SECTION A-A

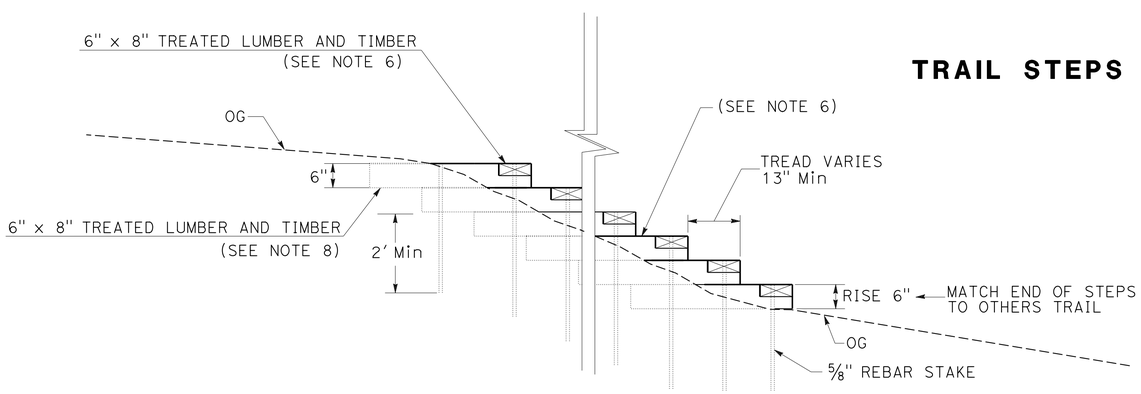

TRAIL STEPS DOWN SLOPE ELEVATION
"ATR4" 30+24.69 TO "ATR4" 30+71.62

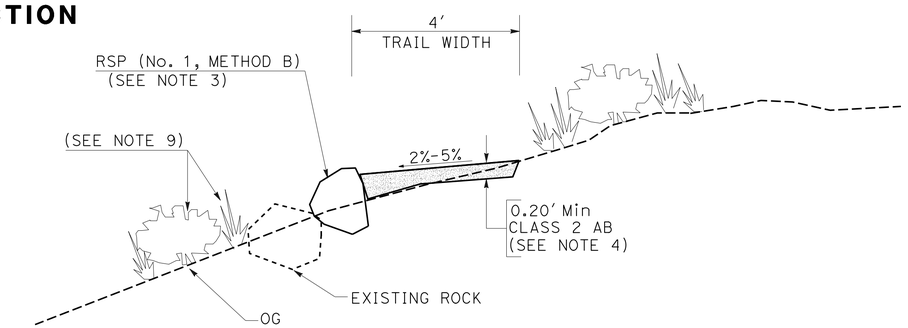

ROCK PLACEMENT AT EDGE OF TRAIL
"ATR4" 30+24.69 TO "ATR4" 30+71.62
"BTR4" 31+34.08 TO "BTR4" 31+68.11

CONSTRUCTION DETAILS
NO SCALE

C-2

CALCULATED-DESIGNED BY	FERNANDO MORALES	REVISED BY	T NGUYEN
CHECKED BY	ALI ALQATAMI	DATE REVISED	3/13
FUNCTIONAL SUPERVISOR	RORY QUINCE		

STATE OF CALIFORNIA - DEPARTMENT OF TRANSPORTATION
Caltrans
06-DESIGN

LAST REVISION 03-21-13 | DATE PLOTTED => 14-JAN-2014 | TIME PLOTTED => 05:44

Dist	COUNTY	ROUTE	POST MILES TOTAL PROJECT	SHEET No.	TOTAL SHEETS
04	Son	1	34.3/34.7	13	57

Ali Alqatami 03-21-13
REGISTERED CIVIL ENGINEER DATE

7-1-13
PLANS APPROVAL DATE

REGISTERED PROFESSIONAL ENGINEER ALI ALQATAMI No. 52024 Exp. 12-31-14 CIVIL STATE OF CALIFORNIA

THE STATE OF CALIFORNIA OR ITS OFFICERS OR AGENTS SHALL NOT BE RESPONSIBLE FOR THE ACCURACY OR COMPLETENESS OF SCANNED COPIES OF THIS PLAN SHEET.

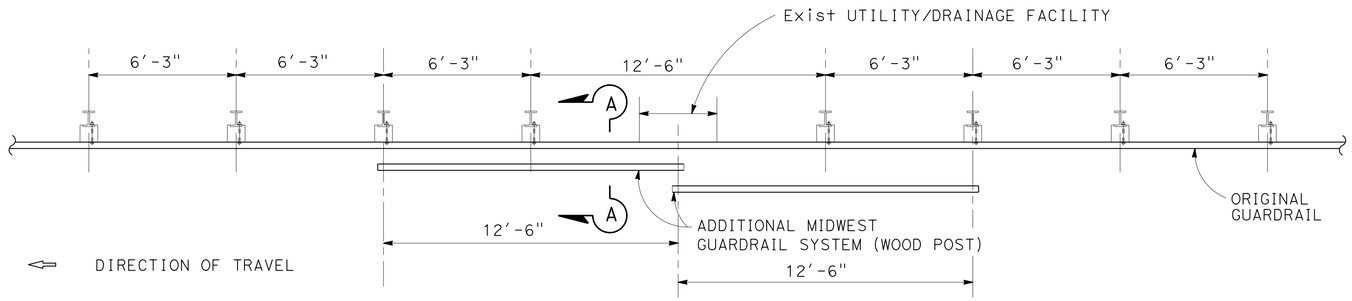

CASE 1

ONE POST OMITTED (SPLICE IN CENTER)

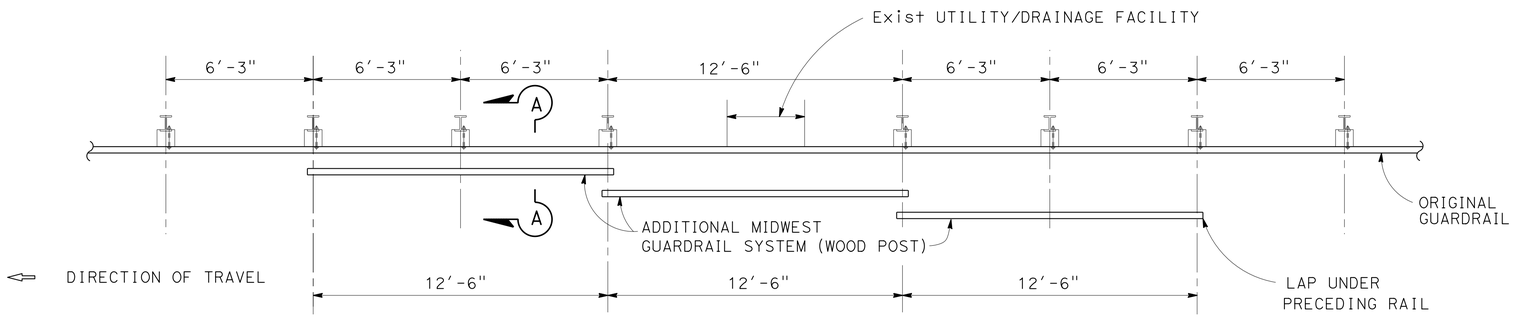

CASE 2

ONE POST OMITTED (SPLICE AT POSTS)

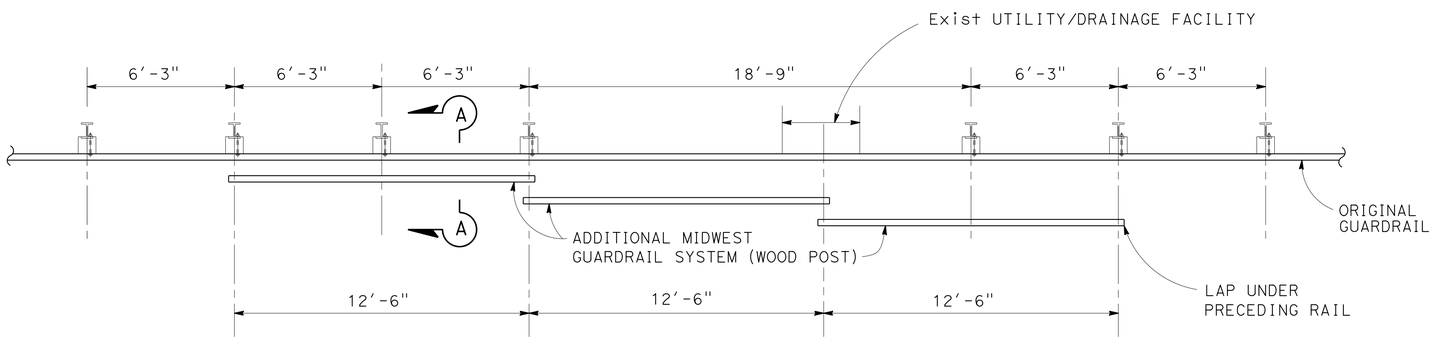

CASE 3

TWO POSTS OMITTED

MIDWEST GUARDRAIL SYSTEM (WOOD POST) INSTALLATION WITH UTILITY CONFLICT

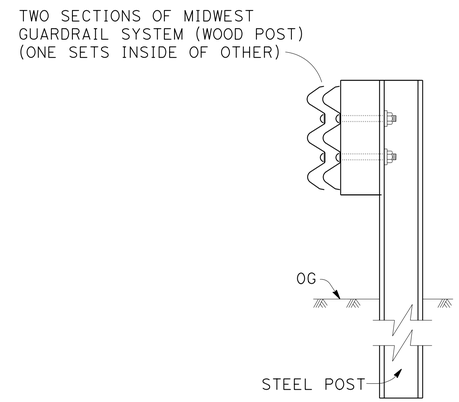

SECTION A-A

CONSTRUCTION DETAILS

NO SCALE

C-3

REVISED BY	T NGUYEN
DATE REVISED	3/13
CALCULATED-DESIGNED BY	FERNANDO MORALES
CHECKED BY	ALI ALQATAMI
FUNCTIONAL SUPERVISOR	RORY QUINCE

STATE OF CALIFORNIA - DEPARTMENT OF TRANSPORTATION
Caltrans®
06-DESIGN

LAST REVISION 03-27-13
DATE PLOTTED => 14-JAN-2014
TIME PLOTTED => 05:44

Dist	COUNTY	ROUTE	POST MILES TOTAL PROJECT	SHEET No.	TOTAL SHEETS
04	Son	1	34.3/34.7	14	57

Ali Alqatami 03-21-13
REGISTERED CIVIL ENGINEER DATE

7-1-13
PLANS APPROVAL DATE

REGISTERED PROFESSIONAL ENGINEER
ALI ALQATAMI
No. 52024
Exp. 12-31-14
CIVIL
STATE OF CALIFORNIA

THE STATE OF CALIFORNIA OR ITS OFFICERS OR AGENTS SHALL NOT BE RESPONSIBLE FOR THE ACCURACY OR COMPLETENESS OF SCANNED COPIES OF THIS PLAN SHEET.

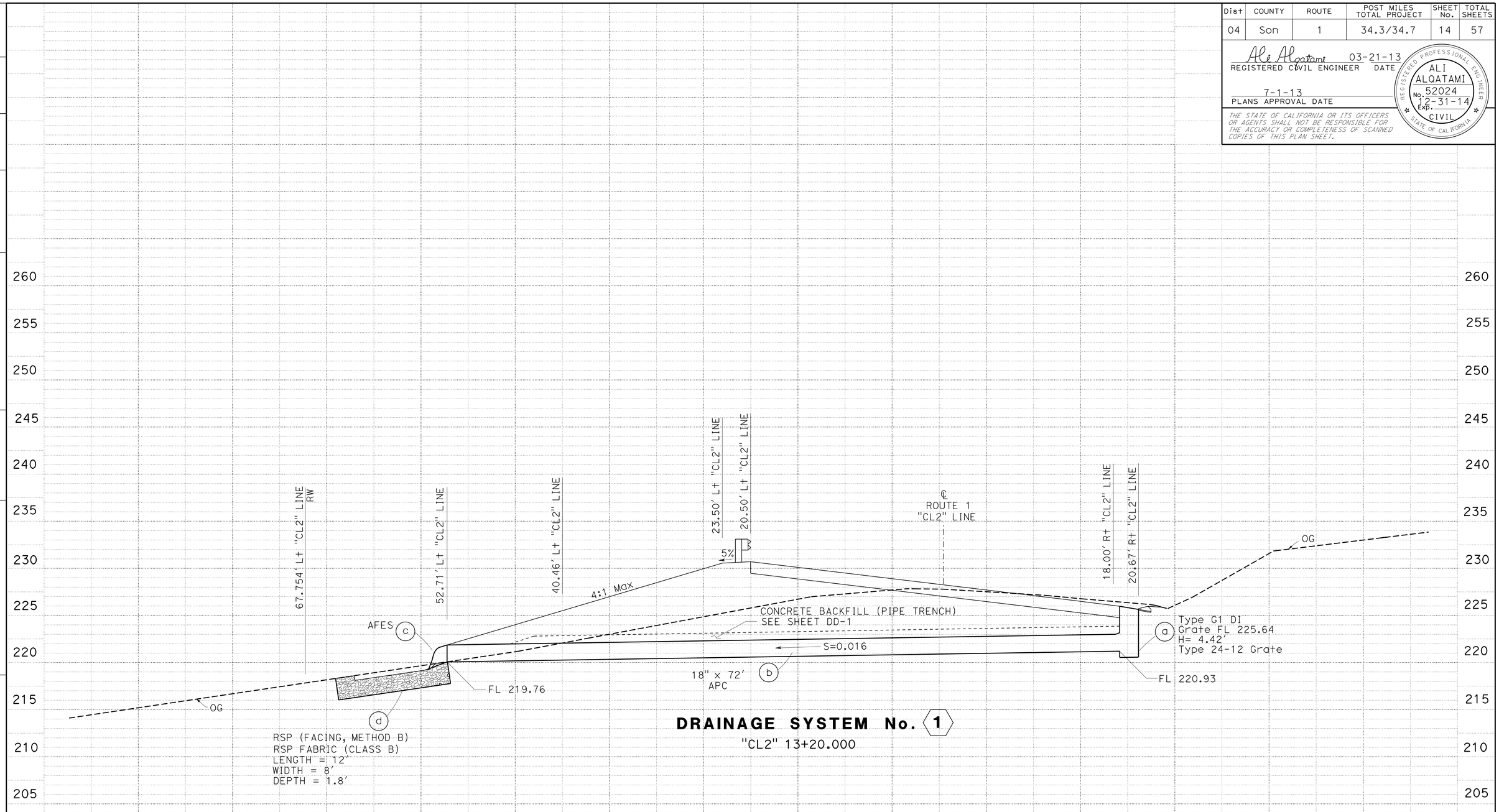

DRAINAGE SYSTEM No. 1

"CL2" 13+20.000

DRAINAGE PROFILE

SCALE: Horiz 1" = 5'
Vert 1" = 5'

DP-1

STATION
CY Exc
Emb
TOTAL

STATE OF CALIFORNIA - DEPARTMENT OF TRANSPORTATION
Caltrans® 06-DESIGN

FUNCTIONAL SUPERVISOR: RORY QUINCE
CALCULATED-DESIGNED BY: FERNANDO MORALES
CHECKED BY: ALI ALQATAMI
REVISED BY: T NGUYEN
DATE REVISED: 3/13

LAST REVISION 03-21-13
DATE PLOTTED => 14-JAN-2014
TIME PLOTTED => 05:44

Dist	COUNTY	ROUTE	POST MILES TOTAL PROJECT	SHEET No.	TOTAL SHEETS
04	Son	1	34.3/34.7	15	57

Ali Alqatami 03-21-13
REGISTERED CIVIL ENGINEER DATE

7-1-13
PLANS APPROVAL DATE

REGISTERED PROFESSIONAL ENGINEER ALI ALQATAMI No. 52024 Exp. 12-31-14 CIVIL STATE OF CALIFORNIA

THE STATE OF CALIFORNIA OR ITS OFFICERS OR AGENTS SHALL NOT BE RESPONSIBLE FOR THE ACCURACY OR COMPLETENESS OF SCANNED COPIES OF THIS PLAN SHEET.

NOTES:

1. "D" REPRESENTS THE OUTSIDE DIAMETER OF THE PIPE CONNECTED TO THE FLARED-END SECTION.
2. THE ROCK MATERIAL AND PLACEMENT METHOD SHALL CONFORM TO THE GRADING "BACKING NO 2" FOR METHOD "B" PLACEMENTS AS SPECIFIED IN SECTIONS 72-2.02 AND 72-2.03 OF THE STANDARD SPECIFICATIONS.

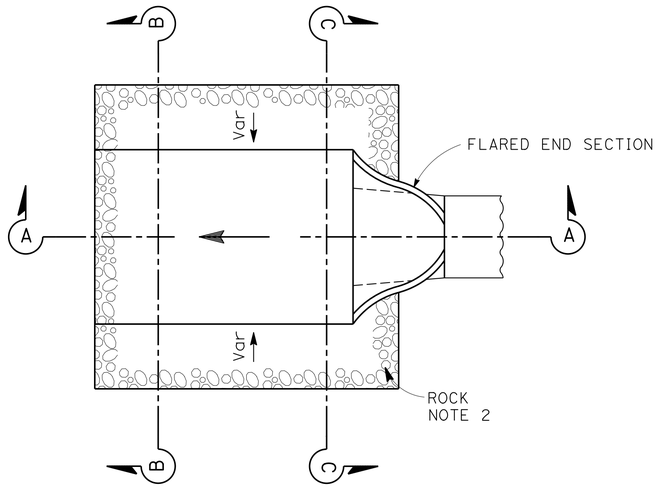

PLAN

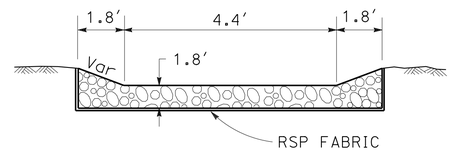

SECTION B-B

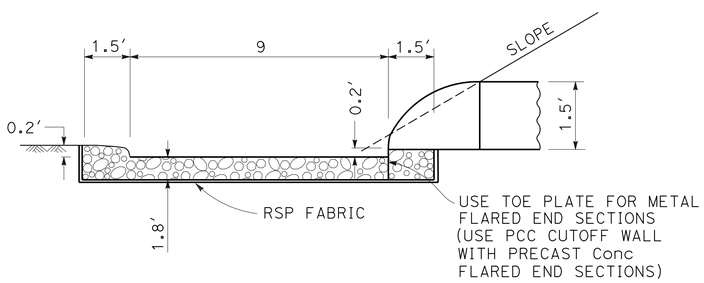

SECTION A-A

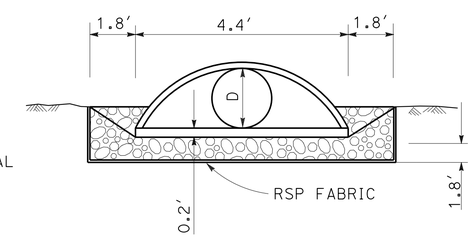

SECTION C-C

ROCK ENERGY DISSIPATOR

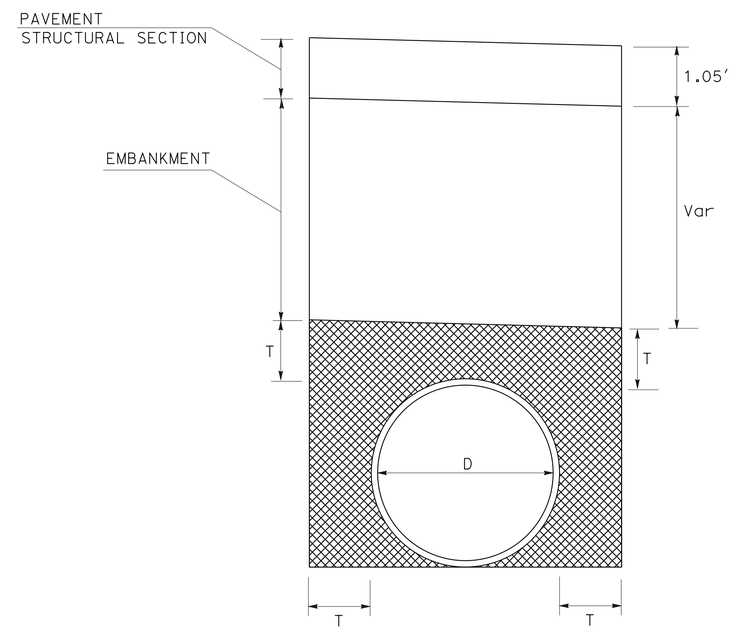

CONCRETE BACKFILL (PIPE TRENCH)

T = 0.5 Ft Min

DRAINAGE DETAILS

NO SCALE

DD-1

STATE OF CALIFORNIA - DEPARTMENT OF TRANSPORTATION
Caltrans 06-DESIGN

FUNCTIONAL SUPERVISOR: RORY QUINCE
CALCULATED-DESIGNED BY: FERNANDO MORALES
CHECKED BY: ALI ALQATAMI
REVISED BY: T NGUYEN
DATE REVISED: 3/13

LAST REVISION 03-21-13 | DATE PLOTTED => 14-JAN-2014 | TIME PLOTTED => 05:44

Dist	COUNTY	ROUTE	POST MILES TOTAL PROJECT	SHEET No.	TOTAL SHEETS
04	Son	1	34.3/34.7	16	57

Ali Alqatami 03-21-13
REGISTERED CIVIL ENGINEER DATE

7-1-13
PLANS APPROVAL DATE

REGISTERED PROFESSIONAL ENGINEER
ALI ALQATAMI
No. 52024
Exp. 12-31-14
CIVIL
STATE OF CALIFORNIA

THE STATE OF CALIFORNIA OR ITS OFFICERS OR AGENTS SHALL NOT BE RESPONSIBLE FOR THE ACCURACY OR COMPLETENESS OF SCANNED COPIES OF THIS PLAN SHEET.

ALTERNATIVE PIPE CULVERTS
ALLOWABLE PIPE MATERIAL

DESIGNATION	CSP		RCP		PLASTIC PIPE
	SIZE (IN)	THICKNESS (IN)	SIZE (IN)	THICKNESS (IN)	TYPE
18" APC	18"	0.079"	18"	2.5"	SMOOTH INTERIOR WALL

DRAINAGE QUANTITIES

DRAINAGE PLAN SHEET No.	DRAINAGE SYSTEM No. ⬡	DRAINAGE UNIT ○	18" APC	18" AFES	MINOR CONCRETE (MINOR STRUCTURE)	CONCRETE BACKFILL (PIPE TRENCH)	FRAME & GRATE	RSP (FACING, METHOD B)	RSP FABRIC (CLASS 8)	HEIGHT OF INLET "H" (N)	DESCRIPTION	STATION	DRAINAGE PLAN SHEET No.	DRAINAGE SYSTEM No. ⬡	DRAINAGE UNIT ○
			LF	EA	CY	CY	EA	CY	SQYD	Ft					
D-1	1	a			3		1			4.4	TYPE G1 DI, GRATE TYPE 24-12	"CL2" 13+20.00	D-1	1	a
		b	72			7					18" x 72' APC, SEE DD-1 & DP-1	"CL2" 13+20.00			b
		c		1							18" AFES	"CL2" 13+20.00			c
D-1	1	d						7	20		RSP (FACING, METHOD B) AND FABRIC	"CL2" 13+20.00	D-1	1	d
			72	1	3	7	1	7	20		TOTAL				

(N) - NOT A SEPARATE PAY ITEM, FOR INFORMATION ONLY.

DRAINAGE QUANTITIES
DQ-1

STATE OF CALIFORNIA - DEPARTMENT OF TRANSPORTATION
Caltrans 06-DESIGN

FUNCTIONAL SUPERVISOR: RORY QUINCE
CALCULATED-DESIGNED BY: FERNANDO MORALES
CHECKED BY: ALI ALQATAMI
REVISED BY
DATE REVISED

LAST REVISION 03-21-13
DATE PLOTTED => 14-JAN-2014
TIME PLOTTED => 05:44

Dist	COUNTY	ROUTE	POST MILES TOTAL PROJECT	SHEET No.	TOTAL SHEETS
04	Son	1	34.3/34.7	17	57

Hassan Taha 03-21-13
REGISTERED CIVIL ENGINEER DATE

7-1-13
PLANS APPROVAL DATE

REGISTERED PROFESSIONAL ENGINEER
HASSAN M. TAHA
No. 60130
Exp. 06/30/14
CIVIL
STATE OF CALIFORNIA

THE STATE OF CALIFORNIA OR ITS OFFICERS OR AGENTS SHALL NOT BE RESPONSIBLE FOR THE ACCURACY OR COMPLETENESS OF SCANNED COPIES OF THIS PLAN SHEET.

NOTES:

1. EXACT SIGN LOCATIONS TO BE DETERMINED BY THE ENGINEER.
2. FOR ADDITIONAL CONSTRUCTION AREA SIGNS, REFER TO TRAFFIC HANDLING PLANS.

STATIONARY MOUNTED CONSTRUCTION AREA SIGNS

SIGN No. (X)	SIGN CODE		SIGN MESSAGE	PANEL SIZE	No. OF POST AND SIZE	No. OF SIGNS
	FEDERAL	CALIFORNIA				
A	W20-1		ROAD WORK AHEAD	48" x 48"	1 - 6" x 6"	2
B	G20-2		END ROAD WORK	36" x 18"	1 - 4" x 4"	2

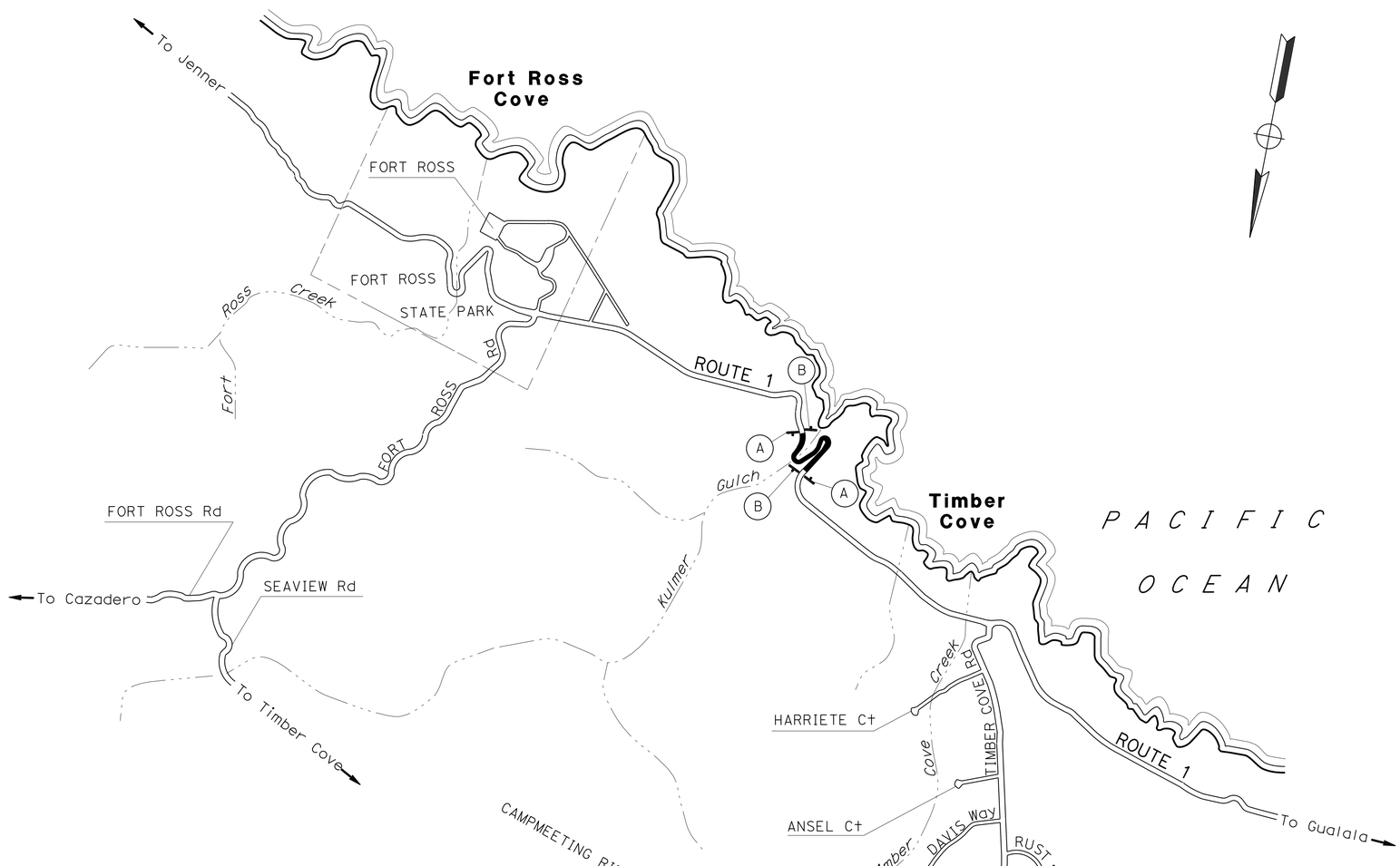

APPROVED FOR CONSTRUCTION AREA SIGN WORK ONLY

CONSTRUCTION AREA SIGNS

NO SCALE

CS-1

STATE OF CALIFORNIA - DEPARTMENT OF TRANSPORTATION
Caltrans 06-TRAFFIC DESIGN

FUNCTIONAL SUPERVISOR: MOHAMMED QATAMI
CALCULATED-DESIGNED BY: VANIK POGOSYAN
CHECKED BY: HASSAN TAHA
REVISED BY: VP
DATE REVISED: 3/13

LAST REVISION 03-21-13 | DATE PLOTTED => 14-JAN-2014 | TIME PLOTTED => 05:44

Dist	COUNTY	ROUTE	POST MILES TOTAL PROJECT	SHEET No.	TOTAL SHEETS
04	Son	1	34.3/34.7	18	57

LICENSED LANDSCAPE ARCHITECT

7-1-13
PLANS APPROVAL DATE

LICENSED LANDSCAPE ARCHITECT
CHRIS PADICK No. 4255
Signature
11-30-14
Renewal Date
03-21-13
Date
STATE OF CALIFORNIA

THE STATE OF CALIFORNIA OR ITS OFFICERS OR AGENTS SHALL NOT BE RESPONSIBLE FOR THE ACCURACY OR COMPLETENESS OF SCANNED COPIES OF THIS PLAN SHEET.

SEED MIX

SEED	BOTANICAL NAME (COMMON NAME)	PERCENT GERMINATION (MINIMUM)	POUNDS PURE LIVE SEED PER ACRE (SLOPE MEASUREMENT)
MIX 1	BROMUS CARINATUS, NATIVE [1] (CALIFORNIA BROME, NATIVE)	75	8
	ELYMUS GLAUCUS, BERKELEY [1] (BLUE WILD RYE, BERKELEY)	40	8
	ESCHSCHOLZIA CAL. var. MARITIMA [1] (CALIFORNIA POPPY)	53	1
	HORDEUM BRACHYANTHERUM [1] (MEADOW BARLEY)	53	6
	LEYMUS TRITICOIDES var. RIO [1] (CREEPING WILD RYE, RIO)	53	6
	LUPINUS BICOLOR [1] (BICOLOR LUPINE)	56	4
	MELICA IMPERFECTA [1] (COAST RANGE ONIONGRASS)	30	6
	NASSELLA PULCHRA [1] (PURPLE NEEDLEGRASS)	53	6
	VULPIA MICROSTACHYS [1] (SMALL FESCUE)	53	4

[1] SEED PRODUCED IN CALIFORNIA ONLY

EROSION CONTROL TYPE 1

SEQUENCE	ITEM	MATERIAL		APPLICATION RATE
		DESCRIPTION	TYPE	
STEP 1	COMPOST	COMPOST	FINE	34 CY/ACRE
STEP 2	ROLLED EROSION CONTROL PRODUCT (NETTING)	NETTING	TYPE A	
STEP 3	HYDROSEED*	SEED	MIX 1	82 LB/ACRE
		FIBER	WOOD	1,000 LB/ACRE
STEP 4	HYDROMULCH	FIBER	WOOD	1,000 LB/ACRE
		TACKIFIER	GUAR	125 LB/ACRE

* SEE FIBER ROLL SEQUENCE.

EROSION CONTROL TYPE 2

SEQUENCE	ITEM	MATERIAL		APPLICATION RATE
		DESCRIPTION	TYPE	
STEP 1	COMPOST	COMPOST	FINE	34 CY/ACRE
STEP 2	HYDROSEED*	SEED	MIX 1	63 LB/ACRE
		FIBER	WOOD	500 LB/ACRE
STEP 3	HYDROMULCH	FIBER	WOOD	1,500 LB/ACRE
		TACKIFIER	GUAR	125 LB/ACRE

* SEE FIBER ROLL SEQUENCE.

FIBER ROLLS

SEQUENCE	ITEM	MATERIAL	
		DESCRIPTION	TYPE
Fiber Rolls must be installed after RECP (Netting) and before Hydroseed.	FIBER ROLLS	FIBER ROLL	8" TO 10" Dia

EROSION CONTROL LEGEND
ECL-1

REVISED BY: CP — DATE REVISED: 3/13
CHRIS PADICK — ALEX MCDONALD
CALCULATED-DESIGNED BY — CHECKED BY
SENIOR LANDSCAPE ARCHITECT: DAVID YAM
STATE OF CALIFORNIA - DEPARTMENT OF TRANSPORTATION
Caltrans® 06-WATER QUALITY

LAST REVISION 03-21-13 | DATE PLOTTED => 14-JAN-2014 | TIME PLOTTED => 05:44

Dist	COUNTY	ROUTE	POST MILES TOTAL PROJECT	SHEET No.	TOTAL SHEETS
04	Son	1	34.3/34.7	19	57

LICENSED LANDSCAPE ARCHITECT

7-1-13
PLANS APPROVAL DATE

LICENSED LANDSCAPE ARCHITECT — CHRIS PADICK No. 4255 — STATE OF CALIFORNIA — EXPIRATION DATE 11-30-14 — REGISTERED PROFESSIONAL ENGINEER 03-21-13

THE STATE OF CALIFORNIA OR ITS OFFICERS OR AGENTS SHALL NOT BE RESPONSIBLE FOR THE ACCURACY OR COMPLETENESS OF SCANNED COPIES OF THIS PLAN SHEET.

NOTE:

FOR ACCURATE RIGHT OF WAY DATA, CONTACT RIGHT OF WAY ENGINEERING AT THE DISTRICT OFFICE.

LEGEND:

EROSION CONTROL (TYPE 1)
- EROSION CONTROL (COMPOST)
- ROLLED EROSION CONTROL PRODUCT (NETTING)
- FIBER ROLLS
- HYDROSEED
- HYDROMULCH

EROSION CONTROL (TYPE 2)
- EROSION CONTROL (COMPOST)
- FIBER ROLLS
- HYDROSEED
- HYDROMULCH

FIBER ROLLS

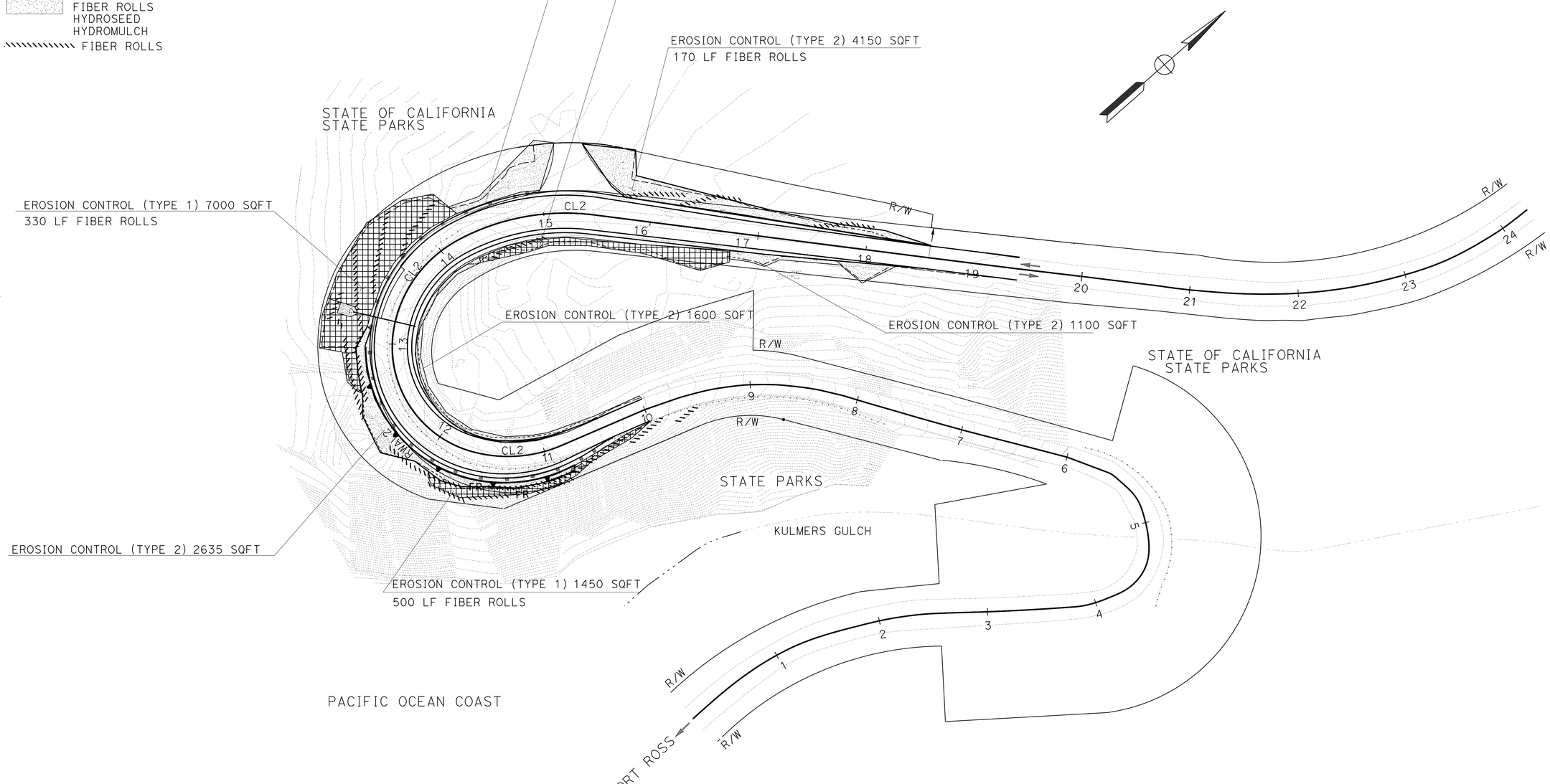

EROSION CONTROL PLAN

SCALE: 1' = 50"

EC-1

APPROVED FOR PLANTING WORK ONLY

STATE OF CALIFORNIA - DEPARTMENT OF TRANSPORTATION
Caltrans®
06-WATER QUALITY

FUNCTIONAL SUPERVISOR: DAVID YAM
CALCULATED-DESIGNED BY: CHRIS PADICK
CHECKED BY: ALEX MCDONALD
REVISED BY: CP
DATE REVISED: 3/13

LAST REVISION 03-21-13
DATE PLOTTED => 14-JAN-2014
TIME PLOTTED => 05:44

Dist	COUNTY	ROUTE	POST MILES TOTAL PROJECT	SHEET No.	TOTAL SHEETS
04	Son	1	34.3/34.7	20	57

LICENSED LANDSCAPE ARCHITECT

7-1-13
PLANS APPROVAL DATE

LICENSED LANDSCAPE ARCHITECT — CHRIS PADICK No. 4255 — Registration 11-30-14 — Renewal Date 03-21-13 — STATE OF CALIFORNIA

THE STATE OF CALIFORNIA OR ITS OFFICERS OR AGENTS SHALL NOT BE RESPONSIBLE FOR THE ACCURACY OR COMPLETENESS OF SCANNED COPIES OF THIS PLAN SHEET.

EROSION CONTROL QUANTITIES

SHEET	EROSION CONTROL TYPE	COMPOST	ROLLED EROSION CONTROL PRODUCT (NETTING)	FIBER ROLLS	HYDROSEED	HYDROMULCH
		SQFT	SQFT	LF	SQFT	SQFT
EC-1	TYPE 1	10,710	10,710	890	10,710	10,710
EC-1	TYPE 2	9,485		170	9,485	9,485
EC-1*	TYPE 2	2,100		786	2,100	2,100
	TOTAL	22,295	10,710	1846	22,295	22,295

* NOT SHOWN ON PLANS. SEE EROSION CONTROL (TYPE 2) DETAIL BELOW.

TEMPORARY WOOD POLE LOCATIONS

SHEET	LOCATION
EC-1*	"CL2" 3+00
EC-1*	"CL2" 4+00
EC-1*	"CL2" 5+00
EC-1*	"CL2" 6+00
EC-1*	"CL2" 7+00
EC-1*	"CL2" 8+80
EC-1*	"CL2" 19+40
EC-1*	"CL2" 20+08
EC-1*	"CL2" 21+00
EC-1*	"CL2" 21+50
EC-1*	"CL2" 22+50
EC-1*	"CL2" 23+50
*	"CL2" 24+50
*	"CL2" 25+50
*	"CL2" 26+50
*	"CL2" 27+50

* NOT SHOWN ON PLANS.

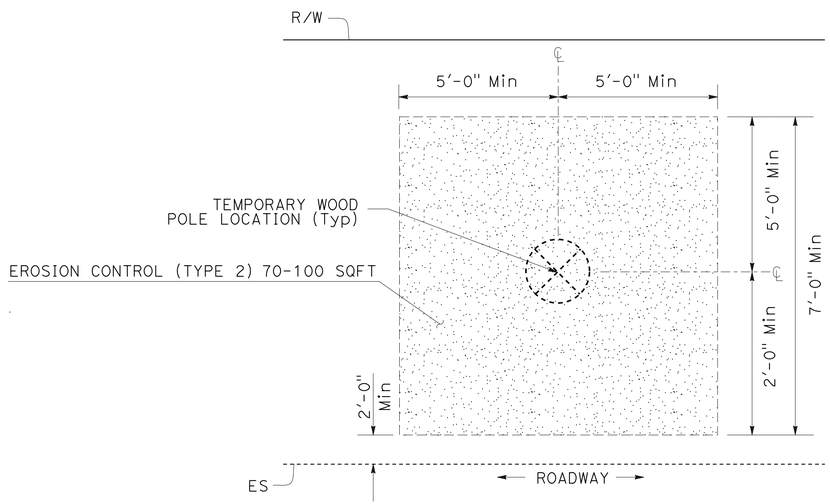

PLAN

EROSION CONTROL (TYPE 2) APPLICATION AT TEMPORARY WOOD POLE LOCATIONS, TYPICAL

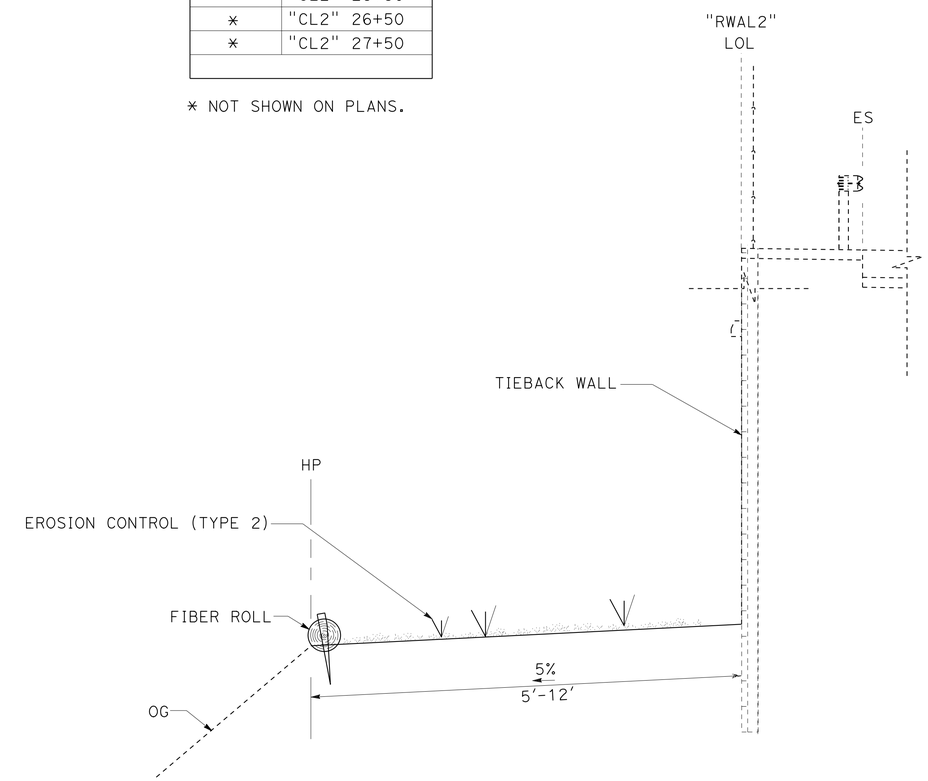

EROSION CONTROL (TYPE 2) APPLICATION AT TIEBACK WALL, TYPICAL

EROSION CONTROL DETAILS AND QUANTITIES

NO SCALE

ECD-1

APPROVED FOR EROSION CONTROL WORK ONLY

STATE OF CALIFORNIA - DEPARTMENT OF TRANSPORTATION
Caltrans® WATER QUALITY

FUNCTIONAL SUPERVISOR: DAVID YAM
CALCULATED-DESIGNED BY: CHRIS PADICK
CHECKED BY: ALEX MCDONALD
REVISED BY: CP
DATE REVISED: 3/13

LAST REVISION 03-21-13 | DATE PLOTTED => 14-JAN-2014 | TIME PLOTTED => 05:44

Dist	COUNTY	ROUTE	POST MILES TOTAL PROJECT	SHEET No.	TOTAL SHEETS
04	Son	1	34.3/34.7	21	57

Hassan Taha 03-21-13
REGISTERED CIVIL ENGINEER DATE

7-1-13
PLANS APPROVAL DATE

REGISTERED PROFESSIONAL ENGINEER HASSAN M. TAHA No. 60130 Exp. 06/30/14 CIVIL STATE OF CALIFORNIA

THE STATE OF CALIFORNIA OR ITS OFFICERS OR AGENTS SHALL NOT BE RESPONSIBLE FOR THE ACCURACY OR COMPLETENESS OF SCANNED COPIES OF THIS PLAN SHEET.

LEGEND:

- DIRECTION OF TRAFFIC
- Temp RAILING (TYPE K)
- CHANNELIZERS (SURFACE MOUNTED)
- (X) ROADSIDE SIGN No.
- ROADSIDE SIGN ONE-POST
- Temp CRASH CUSHION

NOTES:

1. FOR ADDITIONAL CONSTRUCTION AREA SIGNS REFER TO SHEET CS-1.
2. EXACT SIGN LOCATIONS TO BE DETERMINED BY THE ENGINEER.

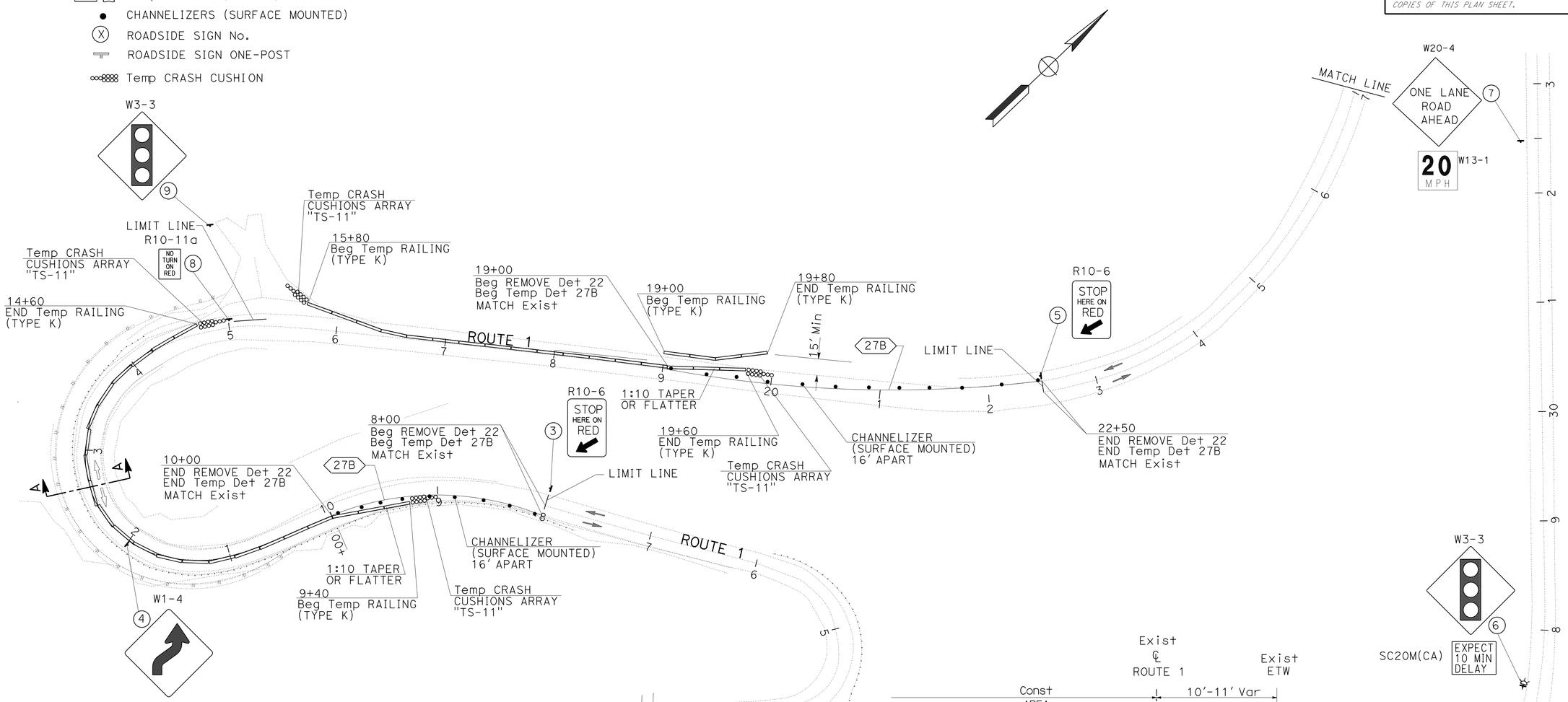

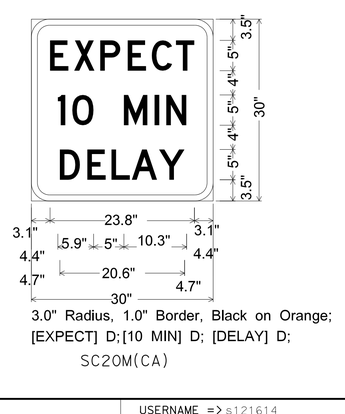

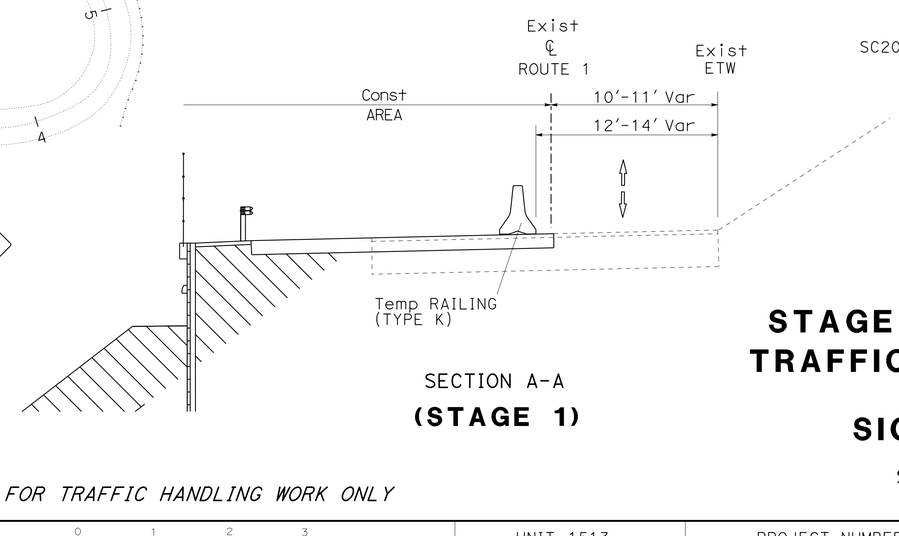

SECTION A-A
(STAGE 1)

STAGE CONSTRUCTION, TRAFFIC HANDLING PLAN AND SIGN DETAILS

SCALE: 1" = 50'

SC-1

APPROVED FOR TRAFFIC HANDLING WORK ONLY

REVISED BY	DATE REVISED
VP	3/13

CALCULATED-DESIGNED BY: VANIK POGOSYAN
CHECKED BY: HASSAN TAHA
FUNCTIONAL SUPERVISOR: MOHAMMED QATAMI

STATE OF CALIFORNIA - DEPARTMENT OF TRANSPORTATION
Caltrans® 06-TRAFFIC DESIGN

LAST REVISION 03-21-13 | DATE PLOTTED => 14-JAN-2014 | TIME PLOTTED => 05:44

Dist	COUNTY	ROUTE	POST MILES TOTAL PROJECT	SHEET No.	TOTAL SHEETS
04	Son	1	34.3/34.7	22	57

Hassan Taha 03-21-13
REGISTERED CIVIL ENGINEER DATE

7-1-13
PLANS APPROVAL DATE

REGISTERED PROFESSIONAL ENGINEER
HASSAN M. TAHA
No. 60130
Exp. 06/30/14
CIVIL
STATE OF CALIFORNIA

THE STATE OF CALIFORNIA OR ITS OFFICERS OR AGENTS SHALL NOT BE RESPONSIBLE FOR THE ACCURACY OR COMPLETENESS OF SCANNED COPIES OF THIS PLAN SHEET.

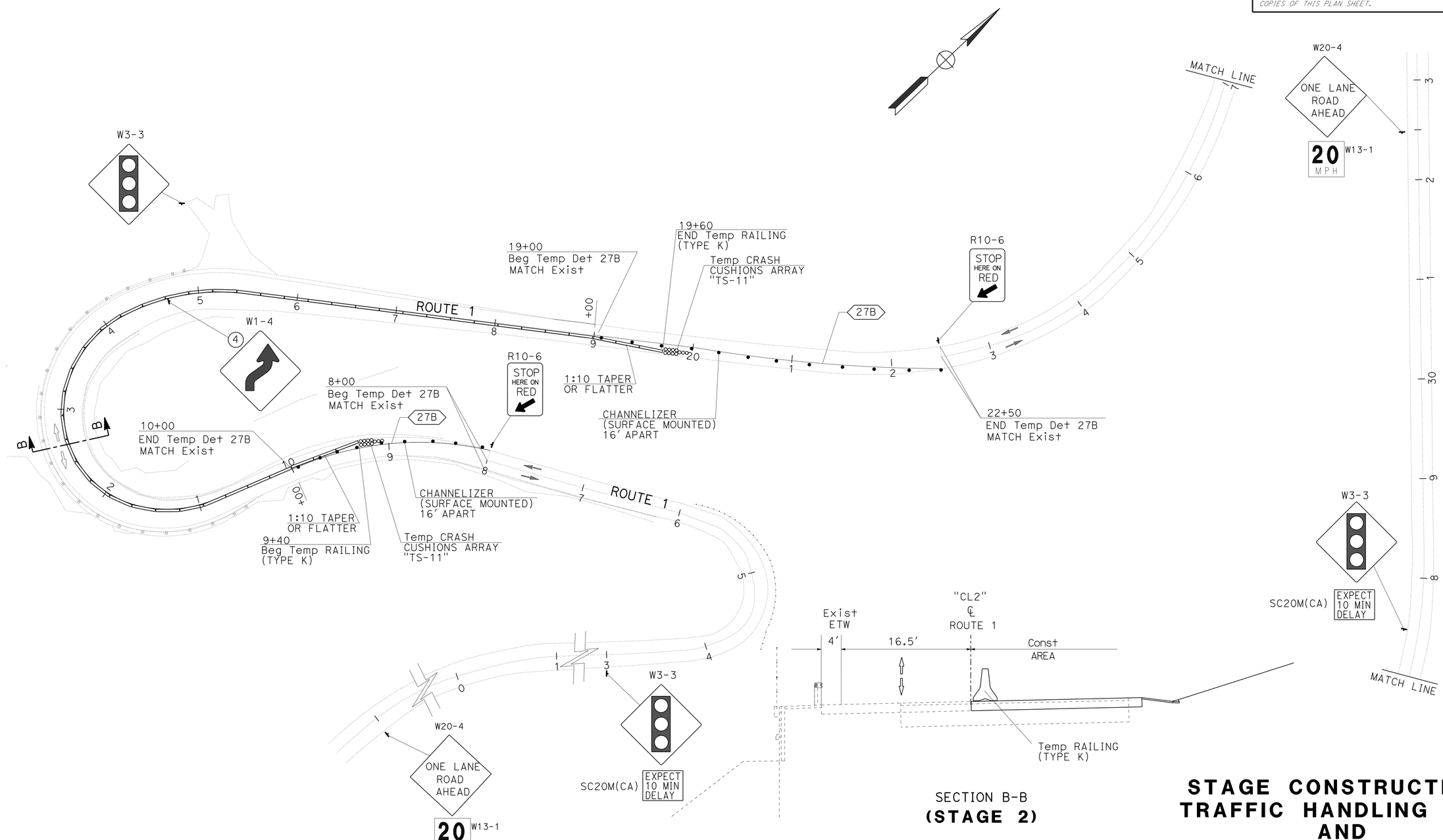

SECTION B-B
(STAGE 2)

STAGE CONSTRUCTION, TRAFFIC HANDLING PLAN AND SIGN DETAILS

SCALE: 1" = 50'

SC-2

APPROVED FOR TRAFFIC HANDLING WORK ONLY

STATE OF CALIFORNIA - DEPARTMENT OF TRANSPORTATION
Caltrans® 06-TRAFFIC DESIGN

FUNCTIONAL SUPERVISOR: MOHAMMED QATAMI
CALCULATED-DESIGNED BY: VANIK POGOSYAN
CHECKED BY: HASSAN TAHA
REVISED BY: VP
DATE REVISED: 3/13

LAST REVISION 03-21-13
DATE PLOTTED => 14-JAN-2014
TIME PLOTTED => 05:44

Dist	COUNTY	ROUTE	POST MILES TOTAL PROJECT	SHEET No.	TOTAL SHEETS
04	Son	1	34.3/34.7	23	57

Hassan Taha 03-21-13
REGISTERED CIVIL ENGINEER DATE

7-1-13
PLANS APPROVAL DATE

REGISTERED PROFESSIONAL ENGINEER
HASSAN M. TAHA
No. 60130
Exp. 06/30/14
CIVIL
STATE OF CALIFORNIA

THE STATE OF CALIFORNIA OR ITS OFFICERS OR AGENTS SHALL NOT BE RESPONSIBLE FOR THE ACCURACY OR COMPLETENESS OF SCANNED COPIES OF THIS PLAN SHEET.

CONSTRUCTION AREA SIGNS (TRAFFIC HANDLING)

SHEET No.	SIGN No. (X)	SIGN CODE FEDERAL	SIGN CODE CALIFORNIA	SIGN MESSAGE	PANEL SIZE	No. OF POST AND SIZE	No. OF SIGNS
TH-1	1	W20-4		AS SHOWN ON PLAN	36" x 36"	1-4" x 4"	1
		W13-1		AS SHOWN ON PLAN	36" x 24"		
	2	W3-3		AS SHOWN ON PLAN	36" x 36"	MOUNT ON POLE	1
			SC20M(CA)	AS SHOWN ON PLAN	30" x 30"		
	3	R10-6		AS SHOWN ON PLAN	36" x 24"	1-4" x 4"	1
	4	W1-4		AS SHOWN ON PLAN	30" x 30"	1-4" x 4"	2
	5	R10-6		AS SHOWN ON PLAN	36" x 24"	1-4" x 4"	1
	6	W3-3		AS SHOWN ON PLAN	36" x 36"	MOUNT ON POLE	1
			SC20M(CA)	AS SHOWN ON PLAN	30" x 30"		
	7	W20-4		AS SHOWN ON PLAN	36" x 36"	1-4" x 4"	1
		W13-1		AS SHOWN ON PLAN	36" x 24"		
	8	R10-11a		AS SHOWN ON PLAN	24" x 30"	1-4" x 4"	1
	9	W3-3		AS SHOWN ON PLAN	36" x 36"	1-4" x 4"	1

TEMPORARY CRASH CUSHION MODULE

SHEET No.	EA
TH-1	44
TH-2	22
TOTAL	66

CHANNELIZER (SURFACE MOUNTED)

SHEET No.	EA
TH-1	21
TH-2	21
TOTAL	42

TEMPORARY PAVEMENT DELINEATION

SHEET No.	LOCATION Sta TO Sta	DETAIL No.	REMOVE PAVEMENT MARKER (EA)	REMOVE YELLOW THERMOPLASTIC TRAFFIC STRIPE (HAZARDOUS WASTE) (LF)	TEMPORARY TRAFFIC STRIPE (TAPE) (LF)	TEMPORARY PAVEMENT MARKING (PAINT) DESCRIPTION	TEMPORARY PAVEMENT MARKING (PAINT) SQFT
TH-1 And TH-2	8+00 TO 10+00	22	20	400		2-LIMIT LINE	24
		27B			400		
	19+00 TO 22+50	22	28	550			
		27B			550		
TOTAL			48	950	950		24

TEMPORARY RAILING (TYPE K)

SHEET No.	STA TO STA	LF
TH-1	9+40 to 14+60	520
	15+80 to 19+60	380
	19+00 to 19+80	80
TH-2	9+40 to 19+60	1020
TOTAL		2000

TRAFFIC HANDLING QUANTITIES

THQ-1

REVISED BY: VP — DATE REVISED: 3/13
CALCULATED-DESIGNED BY: VANIK POGOSYAN — CHECKED BY: HASSAN TAHA
FUNCTIONAL SUPERVISOR: MOHAMMED QATAMI

STATE OF CALIFORNIA - DEPARTMENT OF TRANSPORTATION
Caltrans® 06-TRAFFIC DESIGN

LAST REVISION 03-21-13 | DATE PLOTTED => 14-JAN-2014 | TIME PLOTTED => 05:45

Dist	COUNTY	ROUTE	POST MILES TOTAL PROJECT	SHEET No.	TOTAL SHEETS
04	Son	1	34.3/34.7	24	57

REGISTERED CIVIL ENGINEER 03-21-13 DATE

7-1-13
PLANS APPROVAL DATE

REGISTERED PROFESSIONAL ENGINEER HASSAN M. TAHA No. 60130 Exp. 06/30/14 CIVIL STATE OF CALIFORNIA

THE STATE OF CALIFORNIA OR ITS OFFICERS OR AGENTS SHALL NOT BE RESPONSIBLE FOR THE ACCURACY OR COMPLETENESS OF SCANNED COPIES OF THIS PLAN SHEET.

LEGEND:

XX TRAFFIC STRIPE DETAIL

DELINEATOR

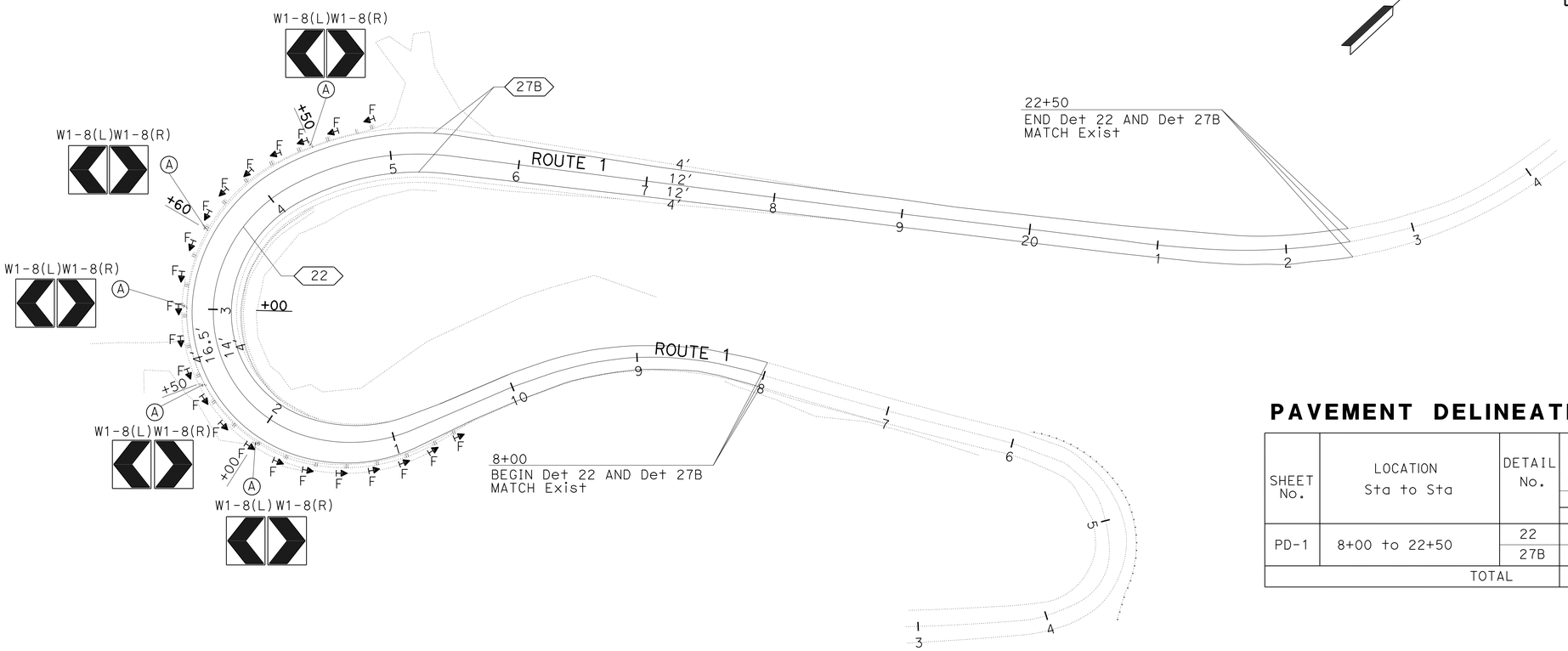

PAVEMENT DELINEATION QUANTITIES

SHEET No.	LOCATION Sta to Sta	DETAIL No.	PAVEMENT MARKER (RETRO-REFLECTIVE)	THERMOPLASTIC TRAFFIC STRIPE
			TYPE D	4"
			EA	LF
PD-1	8+00 to 22+50	22	124	2900
		27B		2900
TOTAL			124	5800

SIGN QUANTITIES

SIGN No.	SIGN CODE	SIGN MESSAGE	No. OF POST AND SIZE	PANEL SIZE	BACKGROUND SHEETING COLOR	BACKGROUND RETROREFLECTIVITY ASTM TYPE	LEGEND SHEETING COLOR	LEGEND RETROREFLECTIVITY ASTM TYPE	STANDARD GRAFFITI FILM	ROADSIDE SIGN (SSBM) EA	FURNISH SINGLE SHEET ALUMINUM SIGN (0.063"-UNFRAMED) SQFT
A	W1-8(L)	CHEVRON ALIGNMENT SIGN	1-4x4	30" x 36"	YELLOW	III	BLACK		X	5	37.5
	W1-8(R)									5	37.5
									TOTAL	10	75

DELINEATOR (CLASS I)

SHEET No.	TYPE F EA*
PD-1	22
TOTAL	22

* SEE SHEET Q-1 FOR TOTAL

APPROVED FOR PAVEMENT DELINEATION WORK ONLY

PAVEMENT DELINEATION AND SIGN PLAN AND QUANTITIES

SCALE: 1" = 50'

PD-1

REVISED BY	DATE REVISED
VP	3/13

CALCULATED-DESIGNED BY: VANIK POGOSYAN
CHECKED BY: HASSAN TAHA
FUNCTIONAL SUPERVISOR: MOHAMMED QATAMI

STATE OF CALIFORNIA - DEPARTMENT OF TRANSPORTATION
Caltrans 06-TRAFFIC DESIGN

LAST REVISION 03-21-13
DATE PLOTTED => 14-JAN-2014
TIME PLOTTED => 05:45

Dist	COUNTY	ROUTE	POST MILES TOTAL PROJECT	SHEET No.	TOTAL SHEETS
04	Son	1	34.3/34.7	25	57

Ali Alqatami 03-21-13
REGISTERED CIVIL ENGINEER DATE

7-1-13
PLANS APPROVAL DATE

REGISTERED PROFESSIONAL ENGINEER ALI ALQATAMI No. 52024 Exp. 12-31-14 CIVIL STATE OF CALIFORNIA

THE STATE OF CALIFORNIA OR ITS OFFICERS OR AGENTS SHALL NOT BE RESPONSIBLE FOR THE ACCURACY OR COMPLETENESS OF SCANNED COPIES OF THIS PLAN SHEET.

ROADWAY QUANTITIES

STATION	ROADWAY EXCAVATION	IMPORTED BORROW	PLACE HOT MIX ASPHALT DIKE (TYPE E)	HMA (TYPE A)	TACK COAT	CLASS 4 AS	CLASS 2 AB	COLD PLANE AC Pvmt
	CY	CY	LF	TON	TON	CY	CY	SQYD
"CL2" 10+80.40 TO 16+80.00			600					
"CL2" 10+00.00 TO 18+84.66	1400	110		1100	10			2240
DRIVEWAY "CL2" 14+98.82 TO 15+78.10				255		200		
Temp DRIVEWAY "CL2" 14+98.82 TO 15+78.10				45	0.5			
TRAIL "ATR4" 30+00.00 TO 30+71.62	36	2					20	
TRAIL "BTR4" 31+34.08 TO 31+68.11	4						10	
TOTAL	1440	112	600	1400	10.5	200	30	2240

TRAIL PATH QUANTITY

STATION	6" x 8" TREATED LUMBER AND TIMBER	RSP (No. 1, METHOD B)	MISCELLANEOUS IRON AND STEEL
	LF	CY	LB
TRAIL "ATR4" 30+00.00 TO 30+71.62	350	5	200
TRAIL "BTR4" 31+34.08 TO 31+68.11		4	
TOTAL	350	9	200

MIDWEST GUARDRAIL SYSTEM (WOOD POST)

DIRECTION	STATION	LAYOUT TYPE (N)	MIDWEST GUARDRAIL SYSTEM (WOOD POST)	ALTERNATIVE FLARED TERMINAL SYSTEM	REMOVE GUARDRAIL	DELINEATOR (CLASS 1)	VEGETATION CONTROL (MINOR CONCRETE)
			LF	EA	LF	EA	SQYD
SB	"CL2" 10+37.75 TO 14+88.72	11B	444	1	383	4	200
SB	FROM PD-1					22	
		TOTAL	444	1	383	26	200

TEMPORARY WATER POLLUTION CONTROL QUANTITIES

STATION	TEMPORARY DRAINAGE INLET PROTECTION	TEMPORARY REINFORCED SILT FENCE	TEMPORARY CONSTRUCTION ENTRANCE	TEMPORARY FIBER ROLLS	TEMPORARY HYDRAULIC MULCH (BONDED FIBER MATRIX)
	EA	LF	EA	LF	SQYD
"CL2" 3+00 TO "CL2" 27+50	1	700	1	2800	4500
TOTAL	1	700	1	2800	4500

SUMMARY OF QUANTITIES

Q-1

REVISED BY	T NGUYEN
DATE REVISED	3/13
CALCULATED-DESIGNED BY	FERNANDO MORALES
CHECKED BY	ALI ALQATAMI
FUNCTIONAL SUPERVISOR	RORY QUINCE

STATE OF CALIFORNIA - DEPARTMENT OF TRANSPORTATION
Caltrans® 06-DESIGN

LAST REVISION 03-21-13 | DATE PLOTTED => 14-JAN-2014 | TIME PLOTTED => 05:45

Dist	COUNTY	ROUTE	POST MILES TOTAL PROJECT	SHEET No.	TOTAL SHEETS
04	Son	1	34.3/34.7	26	57

REGISTERED ELECTRICAL ENGINEER 03-28-13 DATE

7-1-13
PLANS APPROVAL DATE

REGISTERED PROFESSIONAL ENGINEER MONA N. ATTALLAH No. 18407 Exp. 6/30/14 ELECTRICAL STATE OF CALIFORNIA

THE STATE OF CALIFORNIA OR ITS OFFICERS OR AGENTS SHALL NOT BE RESPONSIBLE FOR THE ACCURACY OR COMPLETENESS OF SCANNED COPIES OF THIS PLAN SHEET.

NOTES:

1. OVERHEAD CONDUCTORS MUST BE TIED ON MESSENGER WIRE AT EVERY 3' MAXIMUM WITH SELF-CLINGING NYLON TIES.
2. OVERHEAD ENTRANCE CONDUIT FITTING MUST BE INSTALLED SO THAT RAINWATER WILL NOT SEEP INTO ELECTRICAL EQUIPMENT THROUGH THE ENTRANCE FITTING. FORM A DRIP LOOP AT ENTRANCE FITTING.
3. ESTABLISH CONTINUOUS GROUND WITH SYSTEM GROUND TO ALL METAL PARTS IN SYSTEM BY BONDING JUMPERS AND CONDUITS.
4. SIGNS SHOWN ARE "CONSTRUCTION AREA SIGNS". SEE TRAFFIC HANDLING PLANS FOR DETAILS.
5. REFER TO SES SHEETS FOR TEMPORARY WOOD POLE DETAILS.

LEGEND:

1. POWER MUST BE PROVIDED BY A GENERATOR WITH A BACKUP GENERATOR. SEE DETAIL 4 ON SHEET E-5.
2. INSTALL DEPARTMENT-FURNISHED MODEL 170E CONTROLLER ASSEMBLY ON TEMPORARY FOUNDATION PLATFORM FOR MODEL 332L CABINET PER DETAIL 5 ON SHEET E-5. INSTALL UPS IN CONTROLLER CABINET.
3. 2"C, 3#4, 1#8 (G)
4. 2"C, 2#6 (SIG), 2#8 (LTG)
   2#10 (NB FB), 2#10 (SB FB), 1#8 (G)
5. 2"C, 2#6 (SIG),
   6#14 (SPARE), 5 DLC,
   2#14 (PPB Ø1), 3#14 (SIG Ø1),
   2#14 (PPB Ø2), 3#14 (SIG Ø2),
   2#14 (PPB Ø3), 3#14 (SIG Ø3),
   2#10 (SIG NEUTRAL), 1#8 (G)
6. 2"C, 6#14 (SPARE), 5 DLC,
   2#14 (PPB Ø1), 3#14 (SIG Ø1),
   2#14 (PPB Ø2), 3#14 (SIG Ø2),
   2#14 (PPB Ø3), 3#14 (SIG Ø3),
   2#10 (SIG NEUTRAL), 2#8 (LTG),
   2#10 (NB FB), 2#10 (SB FB), 1#8 (G)
7. 6#14 (SPARE), 5 DLC,
   2#14 (PPB Ø1), 3#14 (SIG Ø1),
   2#14 (PPB Ø2), 3#14 (SIG Ø2),
   2#14 (PPB Ø3), 3#14 (SIG Ø3),
   2#10 (SIG NEUTRAL), 2#8 (LTG),
   2#10 (NB FB), 2#10 (SB FB), 1#8 (G)
8. 3#14 (SPARE), 2 DLC,
   2#14 (PPB Ø2), 3#14 (SIG Ø2),
   1#10 (SIG NEUTRAL), 2#8 (LTG),
   2#10 (SB FB), 1#8 (G)
9. 1 DLC,
   2#10 (SB FB), 1#8 (G)
10. 2#10 (SB FB), 1#8 (G)
11. 2"C, 3#14 (SPARE), 3 DLC,
    2#14 (PPB Ø1), 3#14 (SIG Ø1),
    2#14 (PPB Ø3), 3#14 (SIG Ø3),
    1#10 (SIG NEUTRAL), 2#8 (LTG),
    2#10 (NB FB), 1#8 (G)
12. 2#14 (PPB Ø3), 3#14 (SIG Ø3),
    3#14 (SPARE), 1 DLC, 1#8 (G)
13. 2"C, 3#14 (SPARE), 2 DLC,
    2#14 (PPB Ø1), 3#14 (SIG Ø1),
    1#10 (SIG NEUTRAL), 2#8 (LTG),
    2#10 (NB FB), 1#8 (G)
14. 3#14 (SPARE), 2 DLC,
    2#14 (PPB Ø1), 3#14 (SIG Ø1),
    1#10 (SIG NEUTRAL), 2#8 (LTG),
    2#10 (NB FB), 1#8 (G)
15. 3#14 (SPARE), 3#14 (SIG Ø1),
    1#10 (SIG NEUTRAL), 2#8 (LTG), 1#8 (G)
16. 3#14 (SPARE), 1 DLC, 2#8 (LTG),
    2#14 (PPB Ø1), 3#14 (SIG Ø1), 1#8 (G),
    1#10 (SIG NEUTRAL)
17. 1 DLC,
    2#10 (NB FB), 1#8 (G)
18. 1 DLC
19. 2#10 (NB FB), 1#8 (G)
20. SEE DETAIL 6 SHEET E-5.
21. SEE DETAIL 2 SHEET E-5.
22. SEE DETAIL 3 SHEET E-5.
23. SEE DETAIL 10 SHEET E-6.
24. LOOPS MUST HAVE 5 TURNS.
25. SEE DETAIL 8 SHEET E-6.
26. SEE DETAIL 9 SHEET E-6.
27. SEE DETAIL 12 SHEET E-6.
28. LOOP DETECTORS MUST BE CONNECTED IN PB AS SHOWN ON SHEET E-6 IN DETAIL 13 FOR 1 TYPE D AND 3 TYPE A LOOPS ON ONE SENSOR UNIT CHANNEL.
29. LOOP DETECTORS MUST BE CONNECTED IN PB AS SHOWN ON SHEET E-6 IN DETAIL 14 FOR 1 TYPE D AND 2 TYPE A LOOPS ON ONE SENSOR UNIT CHANNEL.

INDEX TO ELECTRICAL PLANS:

PLAN No.	TITLE
E-1	NOTES, LEGEND, SYMBOLS, AND ABBREVIATIONS
E-2 TO E-4	TEMPORARY SIGNAL SYSTEM
E-5 TO E-6	ELECTRICAL DETAILS
E-7	ELECTRICAL QUANTITIES

SYMBOLS:

PROPOSED

Y Y — ADVANCE FLASHING BEACON WITH A W3-3 SIGN AND SIGN LIGHTING MOUNTED ON A WOOD POLE. SEE DETAIL 1 ON SHEET E-5.

WOOD POLE WITH 200 W HPS LUMINAIRE (ON MASTARM), SIGNAL HEAD, PPB, R10-6 SIGN AND CONDUIT RISER. SEE DETAIL 6 ON SHEET E-5.

(G) — GENERATOR WITH A BACKUP GENERATOR

OH — OVERHEAD 5/8", 7 STRAND GALVANIZED MESSENGER WIRE WITH CONDUCTORS AS NOTED.

FUEL — FUEL TANK

—X—X— TEMPORARY CHAIN LINK FENCE (TYPE CL-6) WITH 4' CHAIN LINK GATE (TYPE CL-6)

—F— FUEL LINE

ABBREVIATION:

UPS — UNINTERRUPTIBLE POWER SUPPLY

NOTES, LEGEND, SYMBOLS, AND ABBREVIATIONS

E-1

STATE OF CALIFORNIA - DEPARTMENT OF TRANSPORTATION
Caltrans 06-ELECTRICAL DESIGN

FUNCTIONAL SUPERVISOR: ALI BAKHDOUD
CALCULATED-DESIGNED BY: MONA ATTALLAH
CHECKED BY: DANIEL VO
REVISED BY: MA
DATE REVISED: 03/28/13

LAST REVISION 03-28-13 | DATE PLOTTED => 14-JAN-2014 | TIME PLOTTED => 05:45

Dist	COUNTY	ROUTE	POST MILES TOTAL PROJECT	SHEET No.	TOTAL SHEETS
04	Son	1	34.3/34.7	27	57

REGISTERED ELECTRICAL ENGINEER 03-28-13 DATE

7-1-13
PLANS APPROVAL DATE

REGISTERED PROFESSIONAL ENGINEER MONA N. ATTALLAH No. 18407 Exp. 6/30/14 ELECTRICAL STATE OF CALIFORNIA

THE STATE OF CALIFORNIA OR ITS OFFICERS OR AGENTS SHALL NOT BE RESPONSIBLE FOR THE ACCURACY OR COMPLETENESS OF SCANNED COPIES OF THIS PLAN SHEET.

NOTE:

FOR ACCURATE RIGHT OF WAY DATA, CONTACT RIGHT OF WAY ENGINEERING AT THE DISTRICT OFFICE.

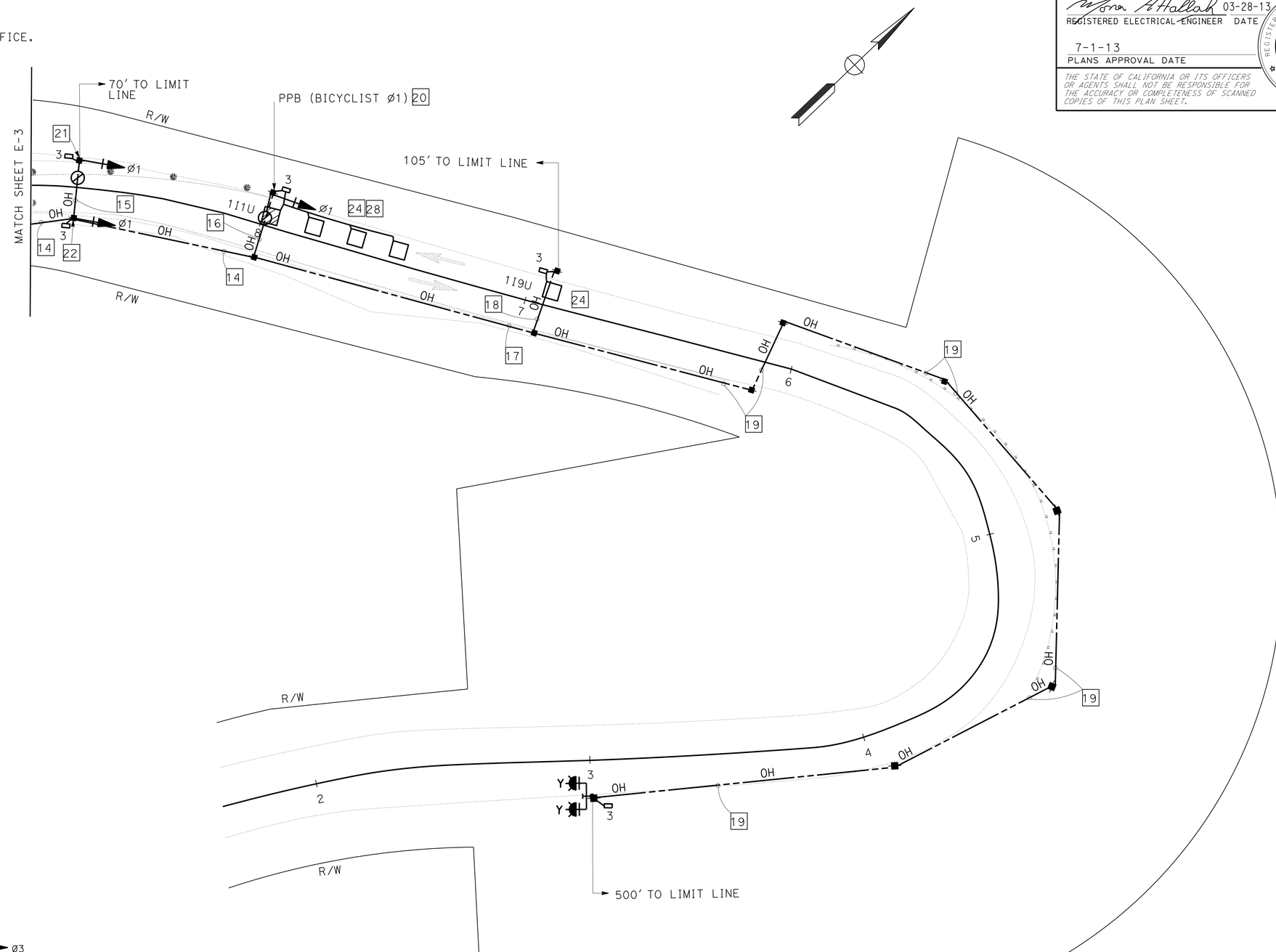

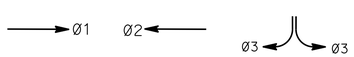

PHASE DIAGRAM
STEADY DEMAND SEQUENCE

TEMPORARY SIGNAL SYSTEM

SCALE: 1" = 20'

E-2

APPROVED FOR ELECTRICAL WORK ONLY

STATE OF CALIFORNIA - DEPARTMENT OF TRANSPORTATION
Caltrans 06-ELECTRICAL DESIGN

FUNCTIONAL SUPERVISOR: ALI BAKHDOUD
CALCULATED-DESIGNED BY: MONA ATTALLAH
CHECKED BY: DANIEL VO
REVISED BY: MA
DATE REVISED: 03/28/13

LAST REVISION 03-28-13
DATE PLOTTED => 14-JAN-2014
TIME PLOTTED => 05:45

Dist	COUNTY	ROUTE	POST MILES TOTAL PROJECT	SHEET No.	TOTAL SHEETS
04	Son	1	34.3/34.7	28	57

REGISTERED ELECTRICAL ENGINEER 03-28-13 DATE

7-1-13
PLANS APPROVAL DATE

REGISTERED PROFESSIONAL ENGINEER MONA N. ATTALLAH No. 18407 Exp. 6/30/14 ELECTRICAL STATE OF CALIFORNIA

THE STATE OF CALIFORNIA OR ITS OFFICERS OR AGENTS SHALL NOT BE RESPONSIBLE FOR THE ACCURACY OR COMPLETENESS OF SCANNED COPIES OF THIS PLAN SHEET.

NOTE:

FOR ACCURATE RIGHT OF WAY DATA, CONTACT RIGHT OF WAY ENGINEERING AT THE DISTRICT OFFICE.

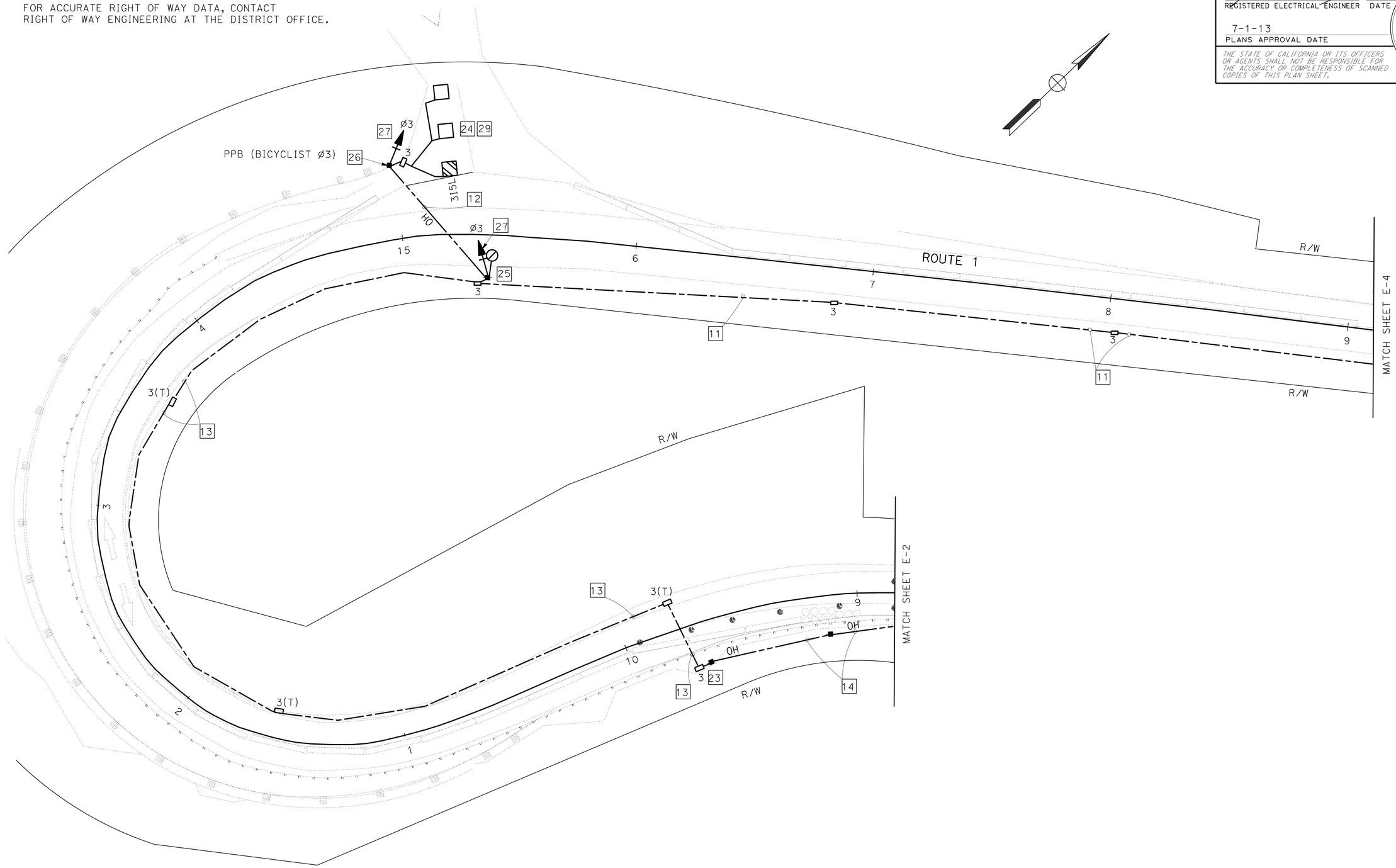

APPROVED FOR ELECTRICAL WORK ONLY

TEMPORARY SIGNAL SYSTEM

SCALE: 1" = 20'

E-3

STATE OF CALIFORNIA - DEPARTMENT OF TRANSPORTATION
Caltrans 06-ELECTRICAL DESIGN

FUNCTIONAL SUPERVISOR: ALI BAKHDOUD
CALCULATED-DESIGNED BY: MONA ATTALLAH
CHECKED BY: DANIEL VO
REVISED BY: MA
DATE REVISED: 03/28/13

LAST REVISION 03-28-13 | DATE PLOTTED => 14-JAN-2014 | TIME PLOTTED => 05:45

Dist	COUNTY	ROUTE	POST MILES TOTAL PROJECT	SHEET No.	TOTAL SHEETS
04	Son	1	34.3/34.7	29	57

REGISTERED ELECTRICAL ENGINEER 03-28-13 DATE

7-1-13
PLANS APPROVAL DATE

REGISTERED PROFESSIONAL ENGINEER MONA N. ATTALLAH No. 18407 Exp. 6/30/14 ELECTRICAL STATE OF CALIFORNIA

THE STATE OF CALIFORNIA OR ITS OFFICERS OR AGENTS SHALL NOT BE RESPONSIBLE FOR THE ACCURACY OR COMPLETENESS OF SCANNED COPIES OF THIS PLAN SHEET.

NOTE:

FOR ACCURATE RIGHT OF WAY DATA, CONTACT RIGHT OF WAY ENGINEERING AT THE DISTRICT OFFICE.

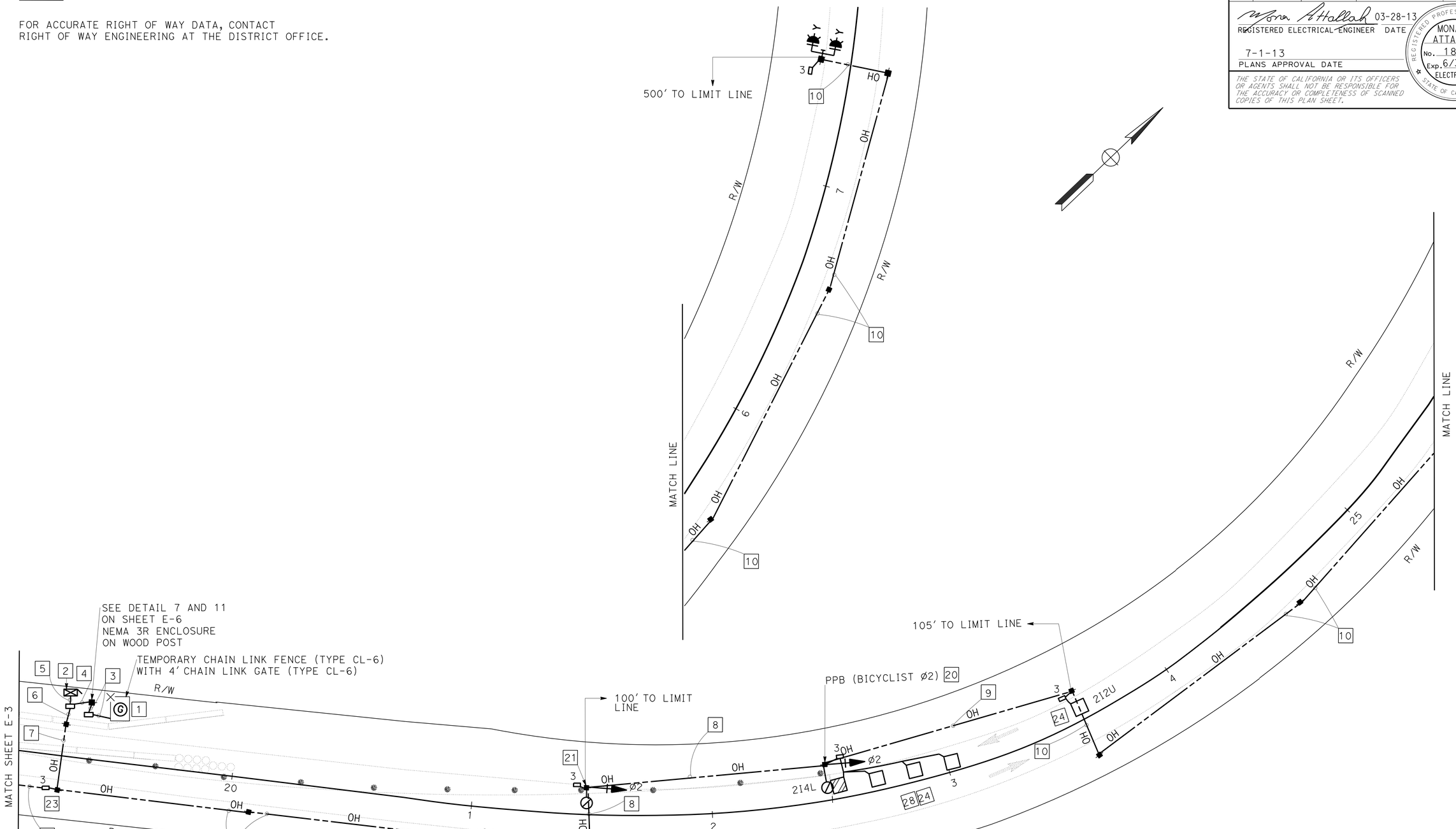

TEMPORARY SIGNAL SYSTEM

SCALE: 1" = 20'

E-4

APPROVED FOR ELECTRICAL WORK ONLY

STATE OF CALIFORNIA - DEPARTMENT OF TRANSPORTATION
Caltrans 06-ELECTRICAL DESIGN

FUNCTIONAL SUPERVISOR: ALI BAKHDOUD
CALCULATED-DESIGNED BY: MONA ATTALLAH
CHECKED BY: DANIEL VO
REVISED BY: MA
DATE REVISED: 03/28/13

LAST REVISION 03-28-13 | DATE PLOTTED => 14-JAN-2014 | TIME PLOTTED => 05:45

BORDER LAST REVISED 7/2/2010 | USERNAME => s121614 | DGN FILE => 0400001252ua004.dgn | RELATIVE BORDER SCALE IS IN INCHES 0 1 2 3 | UNIT 1515 | PROJECT NUMBER & PHASE 04140000741

Dist	COUNTY	ROUTE	POST MILES TOTAL PROJECT	SHEET No.	TOTAL SHEETS
04	Son	1	34.3/34.7	30	57

REGISTERED ELECTRICAL ENGINEER 03-28-13 DATE

7-1-13
PLANS APPROVAL DATE

REGISTERED PROFESSIONAL ENGINEER MONA N. ATTALLAH No. 18407 Exp. 6/30/14 ELECTRICAL STATE OF CALIFORNIA

THE STATE OF CALIFORNIA OR ITS OFFICERS OR AGENTS SHALL NOT BE RESPONSIBLE FOR THE ACCURACY OR COMPLETENESS OF SCANNED COPIES OF THIS PLAN SHEET.

NOTE:

REFER TO SES SHEETS FOR STRUCTURAL DETAILS.

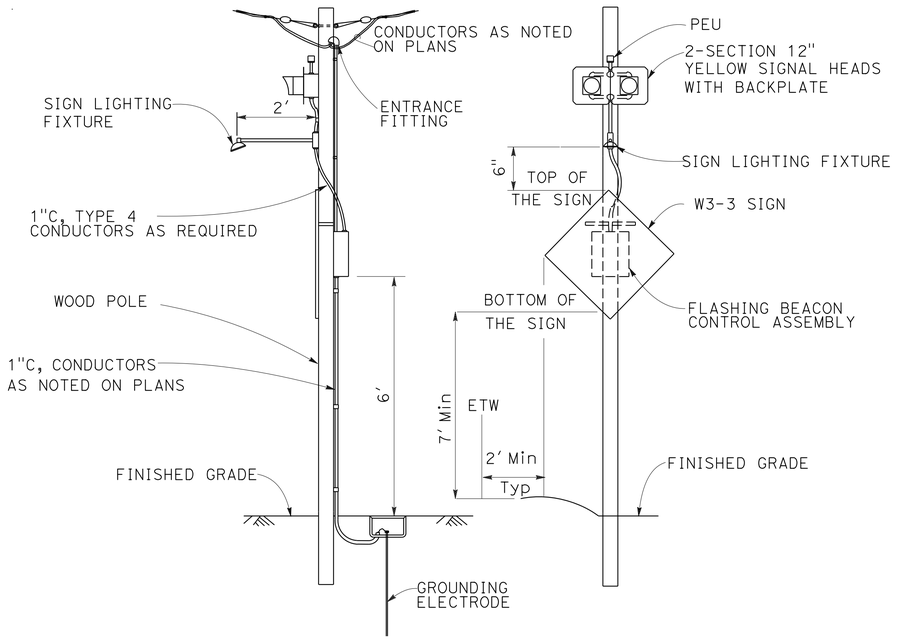

TEMPORARY FLASHING BEACON INSTALLATION

DETAIL 1

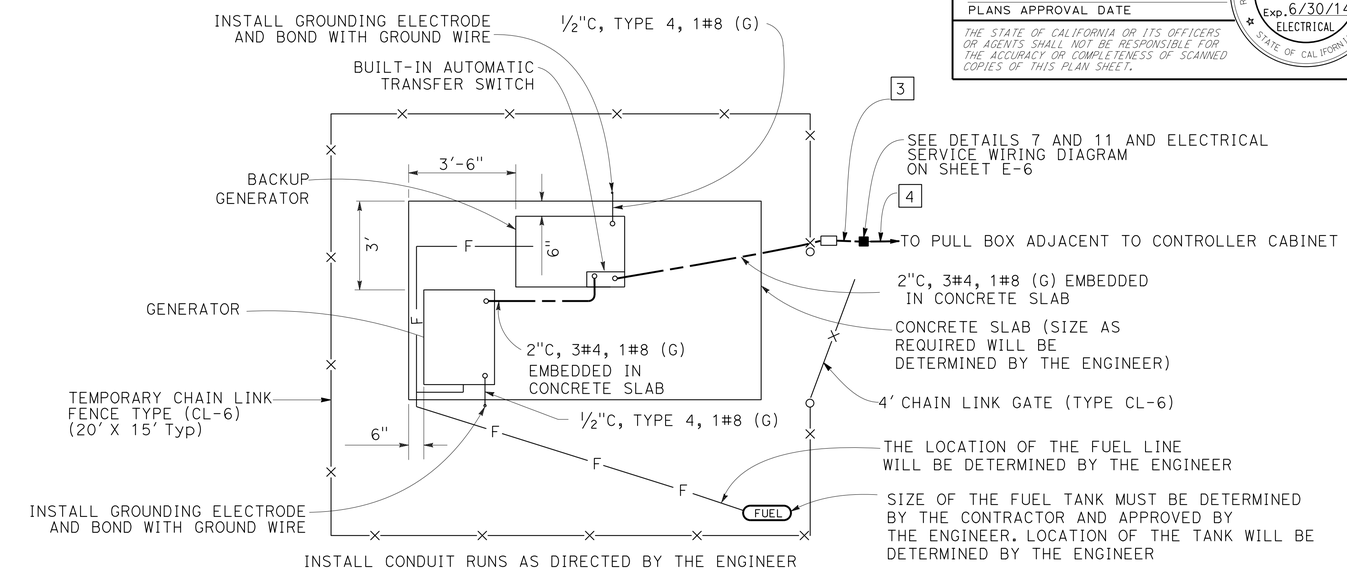

GENERATOR WITH BACKUP GENERATOR

DETAIL 4

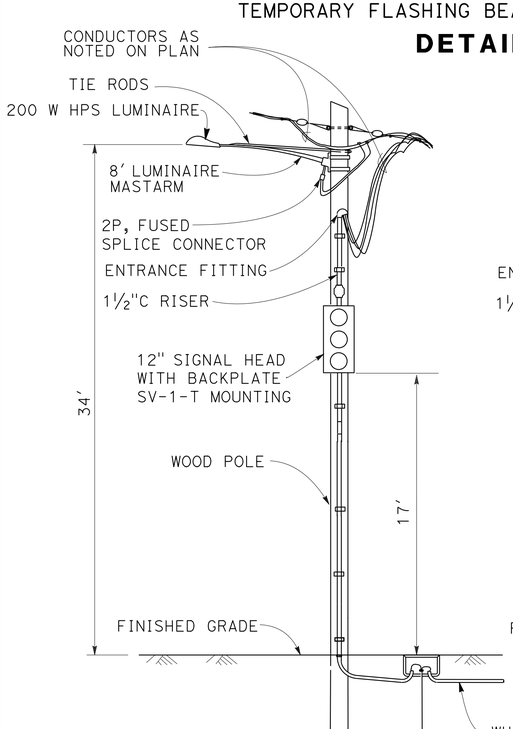

TEMPORARY SIGNAL & LIGHTING INSTALLATION

DETAIL 2

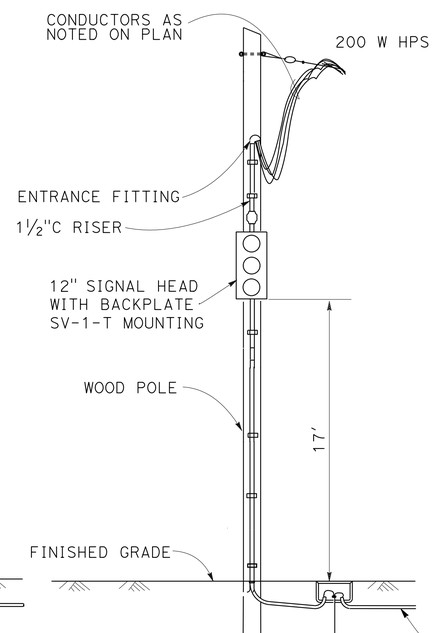

DETAIL 3

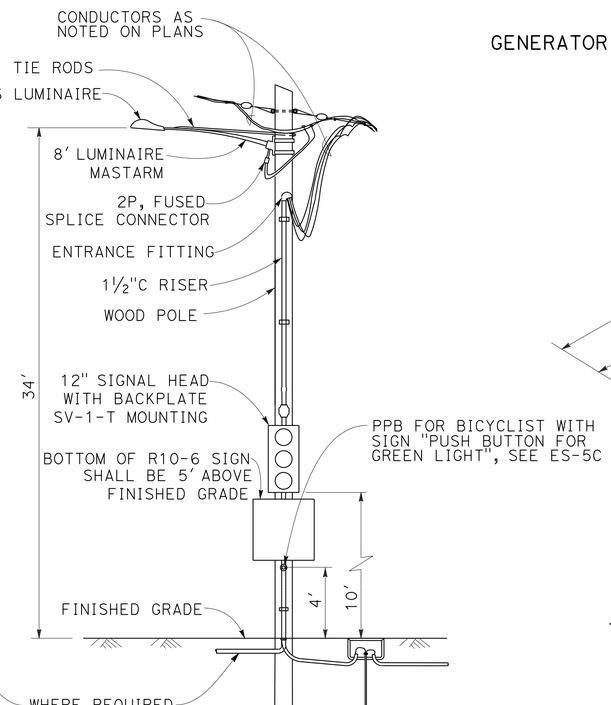

TEMPORARY SIGNAL INSTALLATION

DETAIL 6

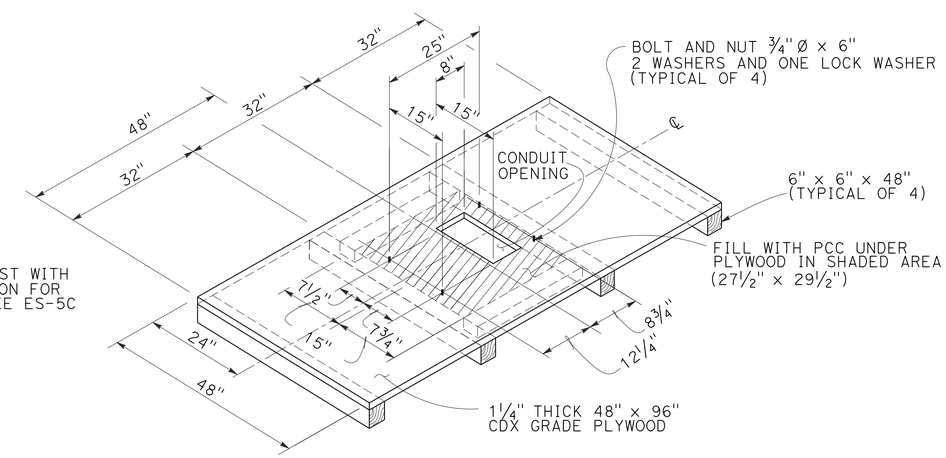

TEMPORARY MODEL 332L CABINET FOUNDATION PLATFORM

DETAIL 5

ELECTRICAL DETAILS

NO SCALE

E-5

MA	03/28/13
REVISED BY	DATE REVISED
MONA ATTALLAH	DANIEL VO
CALCULATED-DESIGNED BY	CHECKED BY
FUNCTIONAL SUPERVISOR	ALI BAKHDOUD

STATE OF CALIFORNIA - DEPARTMENT OF TRANSPORTATION
Caltrans 06-ELECTRICAL DESIGN

LAST REVISION 03-28-13 | DATE PLOTTED => 14-JAN-2014 | TIME PLOTTED => 05:45

Dist	COUNTY	ROUTE	POST MILES TOTAL PROJECT	SHEET No.	TOTAL SHEETS
04	Son	1	34.3/34.7	31	57

REGISTERED ELECTRICAL ENGINEER DATE 03-28-13

7-1-13
PLANS APPROVAL DATE

REGISTERED PROFESSIONAL ENGINEER MONA N. ATTALLAH No. 18407 Exp. 6/30/14 ELECTRICAL STATE OF CALIFORNIA

THE STATE OF CALIFORNIA OR ITS OFFICERS OR AGENTS SHALL NOT BE RESPONSIBLE FOR THE ACCURACY OR COMPLETENESS OF SCANNED COPIES OF THIS PLAN SHEET.

NOTE:

REFER TO SES SHEETS FOR STRUCTURAL DETAILS.

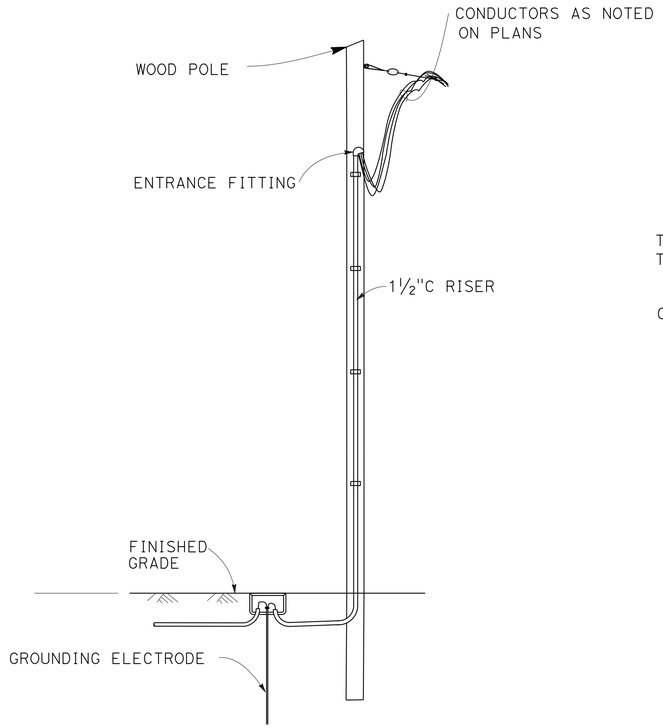

TEMPORARY WOOD POLE INSTALLATION
DETAIL 10

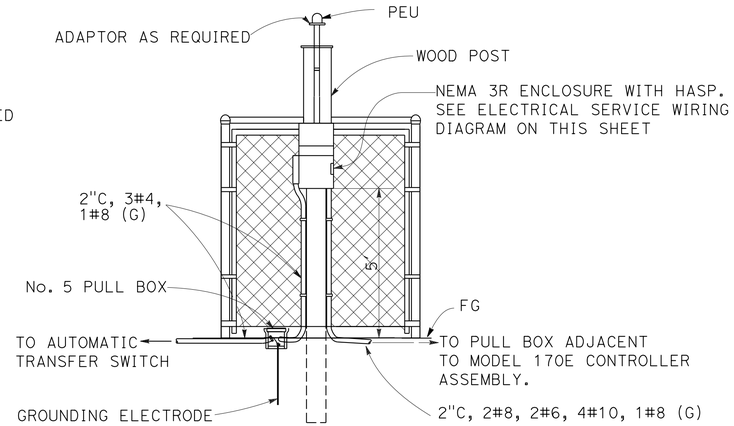

ELECTRICAL SERVICE FRONT VIEW
DETAIL 7

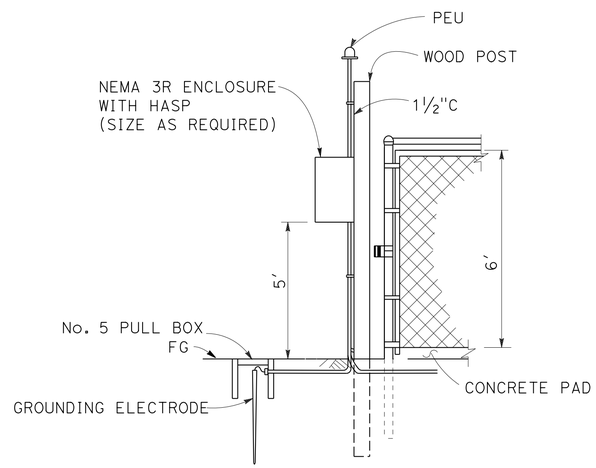

ELECTRICAL SERVICE SIDE VIEW
DETAIL 11

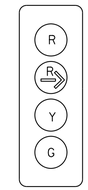

4 SECTION SIGNAL HEAD
DETAIL 12

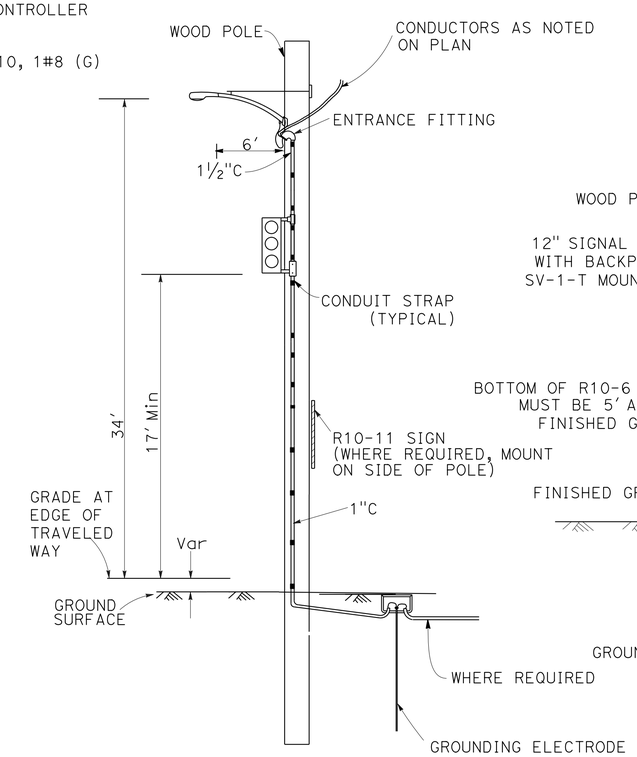

TEMPORARY SIGNAL AND LIGHTING INSTALLATION ON WOOD POLE
DETAIL 8

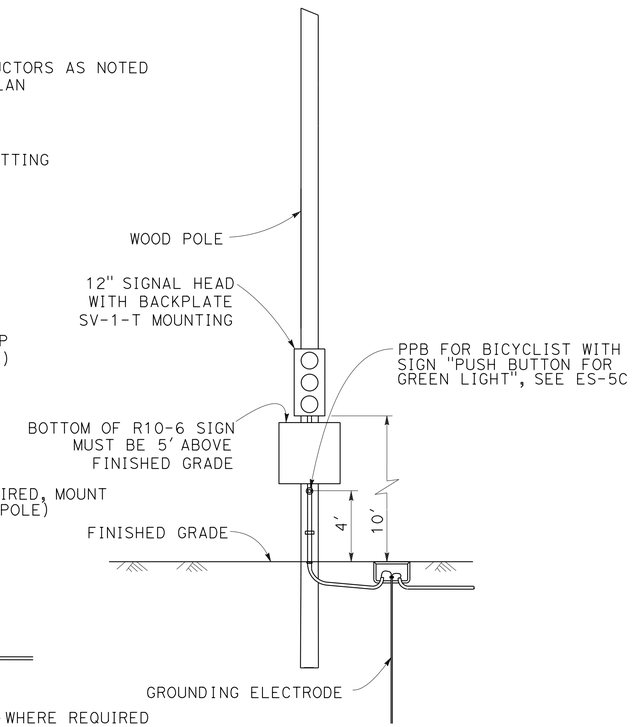

TEMPORARY SIGNAL INSTALLATION ON WOOD POLE
DETAIL 9

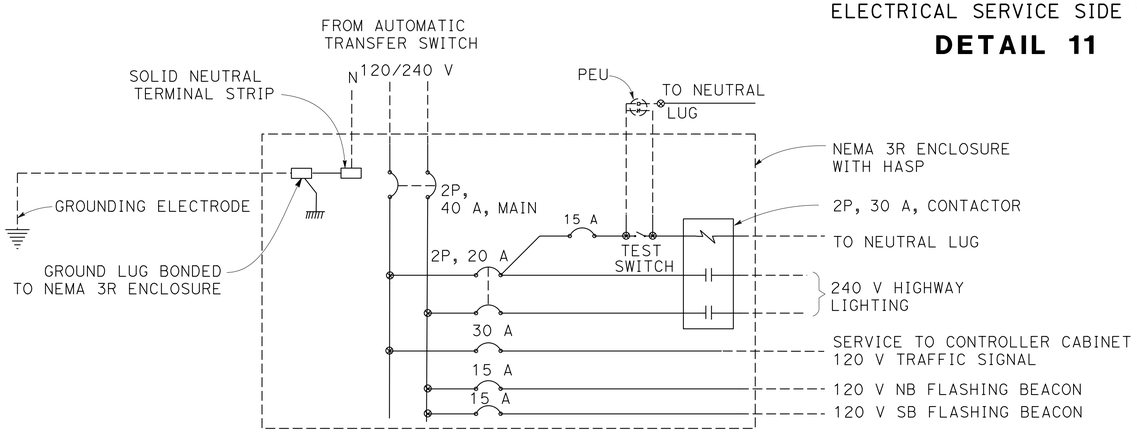

ELECTRICAL SERVICE WIRING DIAGRAM

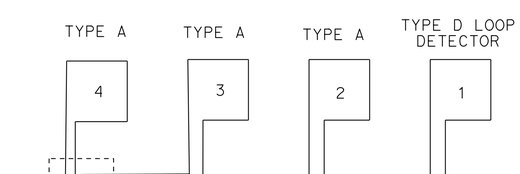

1D + 3A LOOP CONNECTION
DETAIL 13

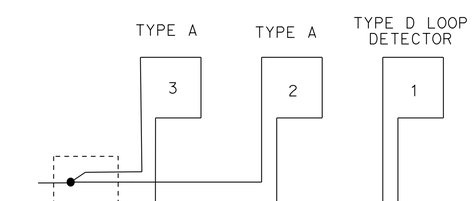

1D + 2A LOOP CONNECTION
DETAIL 14

ELECTRICAL DETAILS
NO SCALE
E-6

STATE OF CALIFORNIA - DEPARTMENT OF TRANSPORTATION
Caltrans 06-ELECTRICAL DESIGN

FUNCTIONAL SUPERVISOR: ALI BAKHDOUD
CALCULATED-DESIGNED BY: MONA ATTALLAH
CHECKED BY: DANIEL VO
REVISED BY: MA
DATE REVISED: 03/28/13

LAST REVISION 03-28-13
DATE PLOTTED => 14-JAN-2014
TIME PLOTTED => 05:45

Dist	COUNTY	ROUTE	POST MILES TOTAL PROJECT	SHEET No.	TOTAL SHEETS
04	Son	1	34.3/34.7	32	57

REGISTERED ELECTRICAL ENGINEER 03-28-13 DATE

7-1-13
PLANS APPROVAL DATE

REGISTERED PROFESSIONAL ENGINEER MONA N. ATTALLAH No. 18407 Exp. 6/30/14 ELECTRICAL STATE OF CALIFORNIA

THE STATE OF CALIFORNIA OR ITS OFFICERS OR AGENTS SHALL NOT BE RESPONSIBLE FOR THE ACCURACY OR COMPLETENESS OF SCANNED COPIES OF THIS PLAN SHEET.

NOTE:

THE QUANTITIES ON THIS SHEET ARE FOR INFORMATION ONLY AND ARE NOT SEPARATE PAY ITEMS.

TEMPORARY SIGNAL SYSTEM

SHEET No.	WOOD POLE	WOOD POST	2"C, TYPE 3	No. 5 PULL BOX	No. 3½ PULL BOX	No. 3½(T) PULL BOX	4 SECTION SIGNAL HEAD	3 SECTION SIGNAL HEAD	2 SECTION SIGNAL HEAD	FBCA	SIGN LIGHTING FIXTURE	200 W HPS LUMINAIRE	TYPE D LOOP	TYPE A LOOP	DLC	No. 4 CONDUCTOR	No. 6 CONDUCTOR	No. 8 CONDUCTOR	No. 8(G) CONDUCTOR	No. 10 CONDUCTOR	No. 14 CONDUCTOR	NEMA 3R SERVICE ENCLOSURE	GENERATOR	MESSENGER CABLE	MODEL 332L CABINET FOUNDATION PLATFORM	PPB	UPS	FUEL TANK	CHAIN LINK FENCE (TYPE CL-6)	4' CHAIN LINK GATE (TYPE CL-6)
	EA	EA	LF	EA	EA	EA	EA	EA	EA	EA	EA	EA	EA	EA	LF	LF	LF	LF	LF	LF	LF	EA	EA	LF	EA	EA	EA	EA	LF	EA
E-2	13		20		5			3	1	1	1	2	1	4	325			220	713	1,436	1,030			738		1				
E-3	4		890		5	3	2					1	1	2	2,369			2,309	652	2,901	10,091			65		1				
E-4	14	1	41	2	6			3	1	1	1	2	1	4	1,023	45	24		988	2,489	3,714	1	2	943	1	1	1	1	66	1

ELECTRICAL QUANTITIES

E-7

CALCULATED-DESIGNED BY MONA ATTALLAH
CHECKED BY DANIEL VO
REVISED BY MA
DATE REVISED 03/28/13
FUNCTIONAL SUPERVISOR ALI BAKHDOUD

STATE OF CALIFORNIA - DEPARTMENT OF TRANSPORTATION
Caltrans 06-ELECTRICAL DESIGN

LAST REVISION 03-28-13 | DATE PLOTTED => 14-JAN-2014 | TIME PLOTTED => 05:45

DIST	COUNTY	ROUTE	POST MILES TOTAL PROJECT	SHEET No	TOTAL SHEETS
04	Son	1	34.3/34.7	33	57

REGISTERED CIVIL ENGINEER 10/15/12 DATE

7-1-13
PLANS APPROVAL DATE

REGISTERED PROFESSIONAL ENGINEER TAMARA S. MARCHENKO No. C76837 Exp. 12/31/14 CIVIL STATE OF CALIFORNIA

The State of California or its officers or agents shall not be responsible for the accuracy or completeness of electronic copies of this plan sheet.

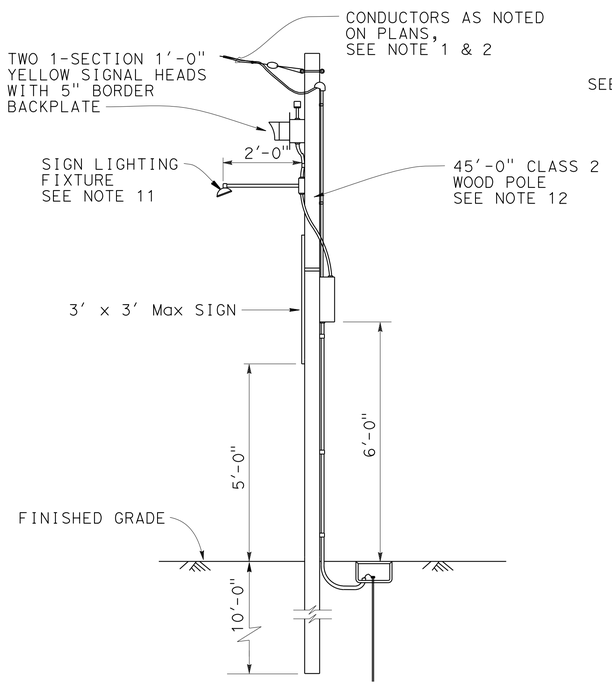

WOOD POLE SUPPORT FOR DETAIL 1 SHEET E-5 AND OTHERS SEE NOTE 12

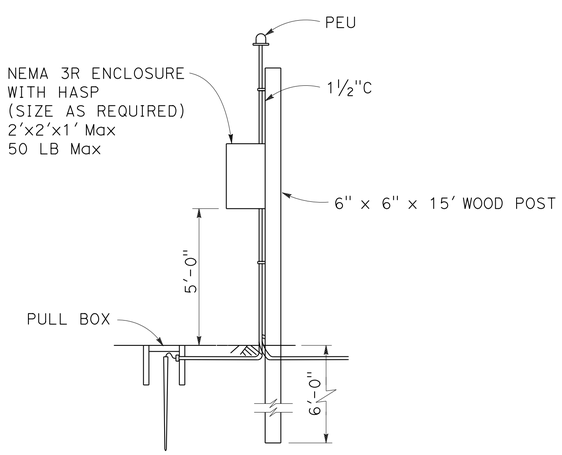

TEMPORARY WOOD POST DETAIL

NOTE:
THE CONTRACTOR SHALL VERIFY ALL CONTROLLING FIELD DIMENSIONS BEFORE ORDERING OR FABRICATING ANY MATERIAL.

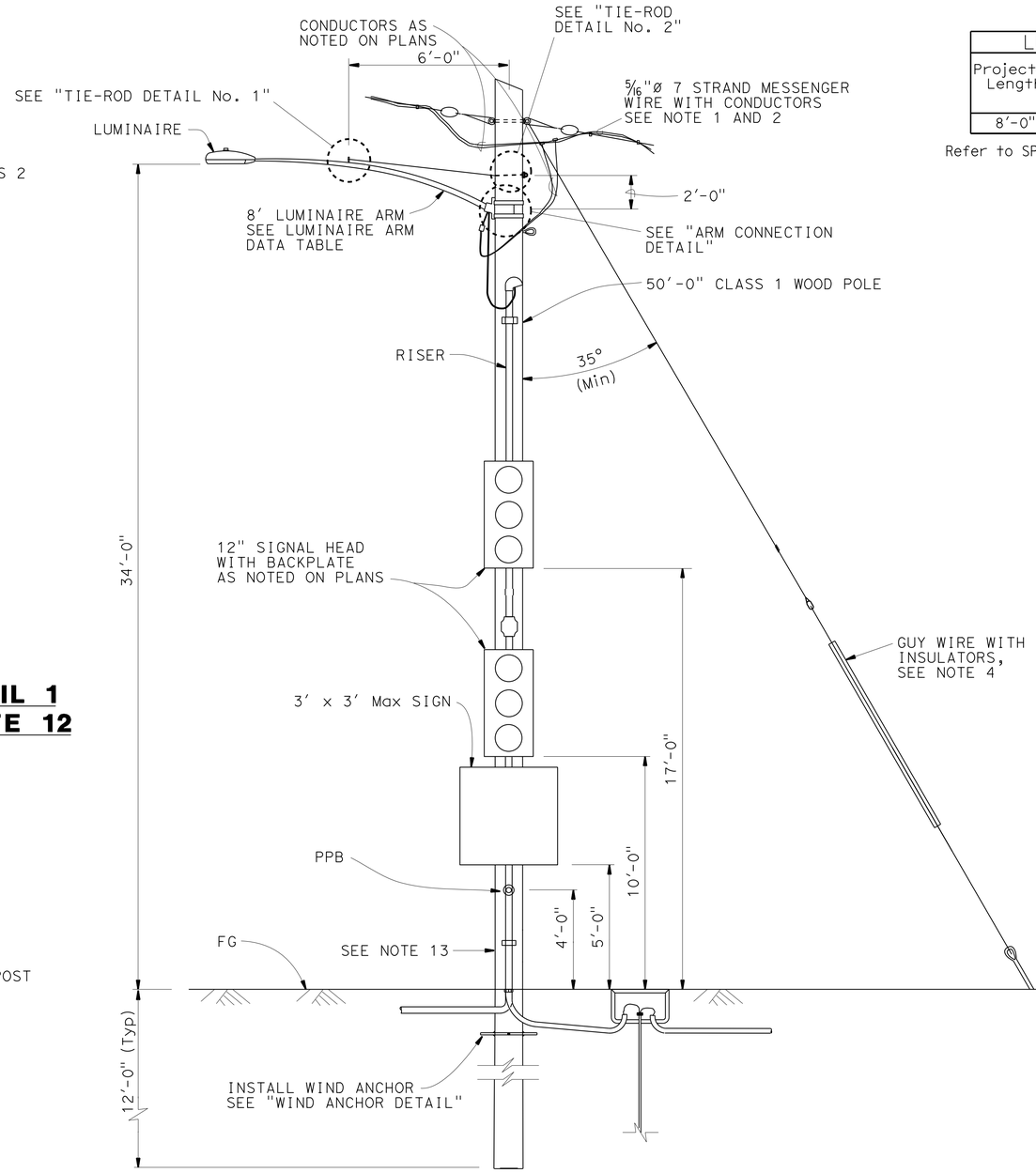

TYPICAL WOOD POLE SUPPORT

SEE NOTE 11

NO SCALE

LUMINAIRE ARM DATA			
Projected Length	N Rise	Min OD At Pole	Thickness
8'-0"	2'-6"	3½"	0.1196"

Refer to SP ES-6A for Luminaire arm details

GENERAL NOTES:

SPECIFICATIONS

Design: AASHTO Standard Specifications for Structural Supports for Highway Signs, Luminaires and Traffic Signals dated 2009 and 2010 Interim Revisions.

LOADING

Wind Loadings: 85 MPH

UNIT STRESSES

Timber Poles: Fb = 1850 psi Tapered treated round pole
Fv = 110 psi ASTM D2899 Standard
E = 1500 x 10^3 psi

TREATMENT

To conform with Section 86 Standard Specifications

SPECIFICATIONS

Caltrans Standard Specifications 2010
ANSI 05 Wood Poles
Utility A475 Grade Wires

NOTES:

1. All overhead cables shall be slack spanned with 25'-0" minimum overhead clearance.
2. Conductors shall be suspended from span-wire as follows: A) Main run 5/16" span-wire with 4.5%± 0.5% sag. No spare conductors allowed except as noted.
3. Overhead line construction not specifically covered here shall conform with the provisions of General Order No. 95 of Public Utilities Commission.
4. Wood poles shall be stabilized using guy wires, breast blocks or rakes at each dead end, corner, drop or line deviation more than 15° from straight line. The direction of the guy shall counteract the resultant of unbalanced force applied to pole. Where space or conflict prevent guy installation, a diagonal brace shall be used. The brace shall be wood and shall be connected to the pole by means to satisfy structural and electrical requirements. The direction of the brace shall counteract the resultant of unbalanced horizontal force of 3000 pounds (Min).
5. Guy wire shall be attached to pole as nearly as practical to the center of conductors load, or 3'-0" Max otherwise, See Note 4.
6. All attachments shall be mounted with stainless steel straps or other manufacturers methods without drilling holes in pole, except as shown. Drilling through pole will require the Engineer's approval.
7. Foundation design is based on AASHTO 2009 and 2010 Interim Revisions article 13.6 Broms' approximate procedure assuming a cohesionless material. The angle of Internal friction used is 30° and unit weight of soil used is 120 lb/ft^3. Verify actual soil condition.
8. If pole is located on a steep slope add 2 feet extra for embedment.
9. See Sheets SES-2, SES-3 and SES-4 for details.
10. For details not shown, see "2010 STANDARD PLANS".
11. All temporary poles support OH Conductors. Attach combination of attachments as specified at locations where indicated on the Electrical Sheets.
12. Max Span 120' for messenger carrying 2#10 and 1#8, total 3 conductors only, see sheets E2 and E4, notes 10 and 19 for locations.
13. All temporary wood poles shall be protected from traffic by means according to California Department of Transportation Highway Manual as required.

BRANCH CHIEF	JAMES SAGAR	DESIGN	BY T MARCHENKO	CHECKED A MALAK
		DETAILS	BY H NGUYEN	CHECKED A MALAK
		QUANTITIES	BY	CHECKED

STATE OF CALIFORNIA
DEPARTMENT OF TRANSPORTATION

DIVISION OF ENGINEERING SERVICES
DESIGN AND TECHNICAL SERVICES
SPECIAL DESIGNS BRANCH
B

BRIDGE NO. N/A
POST MILE 34.3/34.7

TEMPORARY SIGNAL SYSTEM
TEMPORARY WOOD POLE

SES-1

(ENGLISH) SPECIAL DESIGNS BRANCH BORDER SHEET (REV. 7-1-09)

ORIGINAL SCALE IN INCHES FOR REDUCED PLANS 0 1 2 3

UNIT: 3619
PROJECT NUMBER & PHASE: 04140000741
CONTRACT NO.: 04-4S6201

DISREGARD PRINTS BEARING EARLIER REVISION DATES

REVISION DATES: 8-9-11 10-15-12

SHEET 1 OF 4

FILE => spec_des_br_prj/2011sd/04-4s6201_ses1.dgn

USERNAME => s121614 DATE PLOTTED => 14-JAN-2014 TIME PLOTTED => 05:48

DIST	COUNTY	ROUTE	POST MILES TOTAL PROJECT	SHEET No	TOTAL SHEETS
04	Son	1	34.3/34.7	34	57

REGISTERED CIVIL ENGINEER 10/15/12 DATE

7-1-13
PLANS APPROVAL DATE

REGISTERED PROFESSIONAL ENGINEER TAMARA S. MARCHENKO No. C76837 Exp. 12/31/14 CIVIL STATE OF CALIFORNIA

The State of California or its officers or agents shall not be responsible for the accuracy or completeness of electronic copies of this plan sheet.

NOTES:

1. All hardware and steel shall be galvanized after fabrication.
2. Arm base connection details shall be in compliance with Standard Plans ES-6A with noted modifications.
3. 3500 lb Min capacity strap system shall be used for top and bottom of plate.
4. Verify pole dimensions at Tie-Rod attachment height. Fabricate 8" flat bar with "L" Dimension to maintain an open gap between flanges in finished installation.

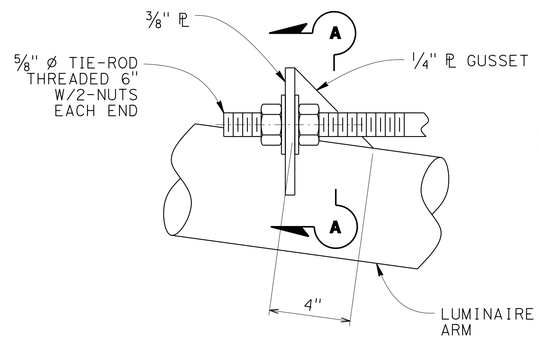

ELEVATION

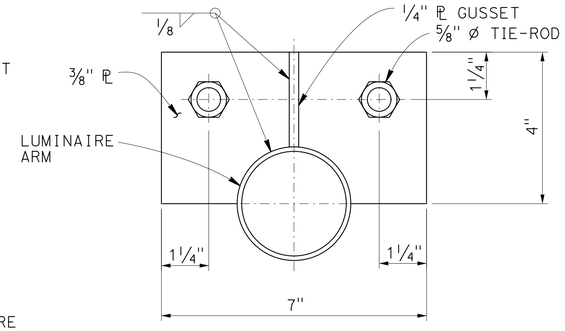

SECTION A-A

TIE-ROD DETAIL No. 1

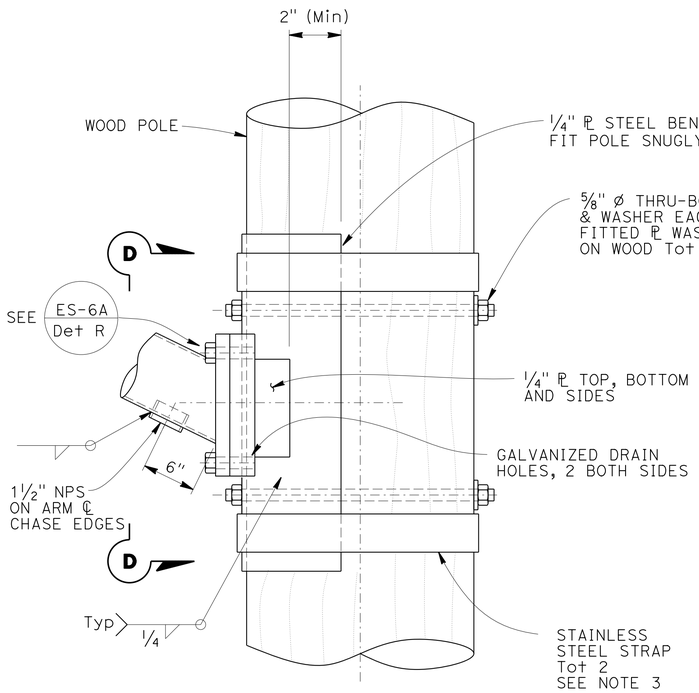

ELEVATION

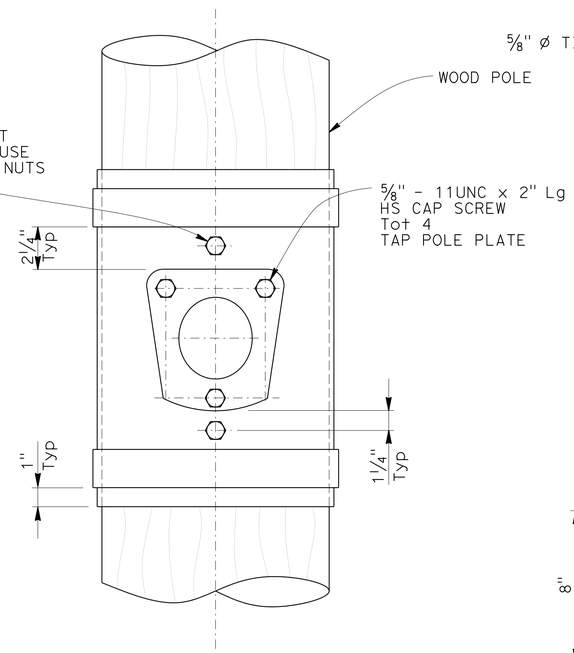

VIEW D-D

NOTE:
THE CONTRACTOR SHALL VERIFY ALL CONTROLLING FIELD DIMENSIONS BEFORE ORDERING OR FABRICATING ANY MATERIAL.

ARM CONNECTION DETAILS

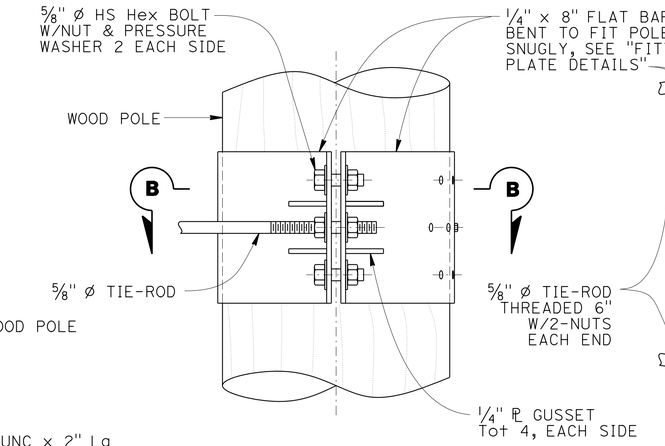

ELEVATION

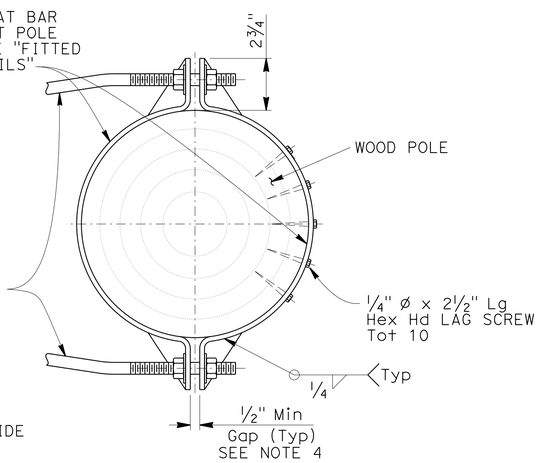

SECTION B-B

TIE-ROD DETAIL No. 2

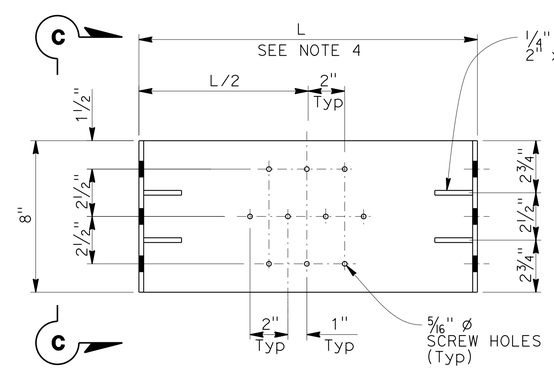

ELEVATION

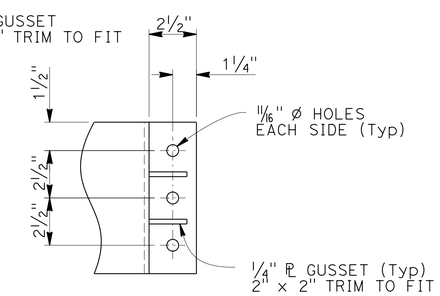

VIEW C-C

FITTED PLATE DETAILS

Note: 2 Required (1 w/screw holes, 1 without)

NO SCALE

BRANCH CHIEF JAMES SAGAR	DESIGN	BY T MARCHENKO	CHECKED A MALAK
	DETAILS	BY H NGUYEN	CHECKED A MALAK
	QUANTITIES	BY	CHECKED

STATE OF CALIFORNIA
DEPARTMENT OF TRANSPORTATION

DIVISION OF ENGINEERING SERVICES
DESIGN AND TECHNICAL SERVICES
SPECIAL DESIGNS BRANCH
B

BRIDGE NO. N/A
POST MILE 34.3/34.7

TEMPORARY SIGNAL SYSTEM
WOOD POLE MOUNTING DETAILS

SES-2

SHEET 2 OF 4

(ENGLISH) SPECIAL DESIGNS BRANCH BORDER SHEET (REV. 7-1-09)

ORIGINAL SCALE IN INCHES FOR REDUCED PLANS 0 1 2 3

UNIT: 3619
PROJECT NUMBER & PHASE: 04140000741
CONTRACT NO.: 04-4S6201

DISREGARD PRINTS BEARING EARLIER REVISION DATES

REVISION DATES 8-9-11 10-15-12

FILE => spec_des_br_prj/2011sd/04-4s6201_ses2.dgn

USERNAME => s126614 DATE PLOTTED => 14-JAN-2014 TIME PLOTTED => 05:48

DIST	COUNTY	ROUTE	POST MILES TOTAL PROJECT	SHEET No	TOTAL SHEETS
04	Son	1	34.3/34.7	35	57

REGISTERED CIVIL ENGINEER 10/15/12 DATE

7-1-13
PLANS APPROVAL DATE

REGISTERED PROFESSIONAL ENGINEER TAMARA S. MARCHENKO No. C76837 Exp. 12/31/14 CIVIL STATE OF CALIFORNIA

The State of California or its officers or agents shall not be responsible for the accuracy or completeness of electronic copies of this plan sheet.

NOTE:

1. Verify soil condition, slope, and adjust anchoring to satisfy basic design requirements Note 7 SES-1

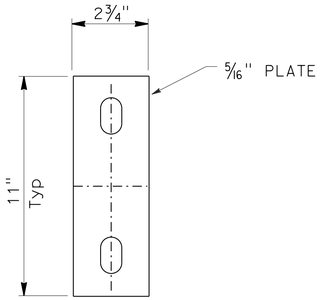

COMPARTMENT PLATE (Mod)

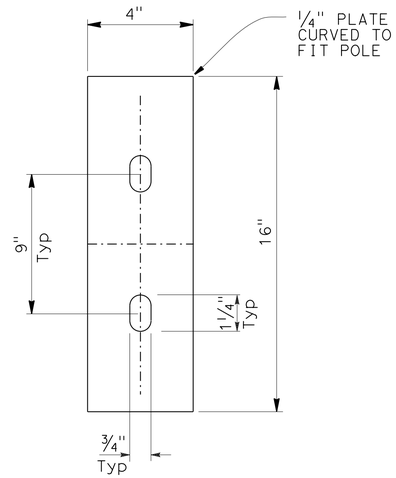

BACKPLATE

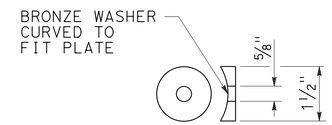

DETAIL "C"

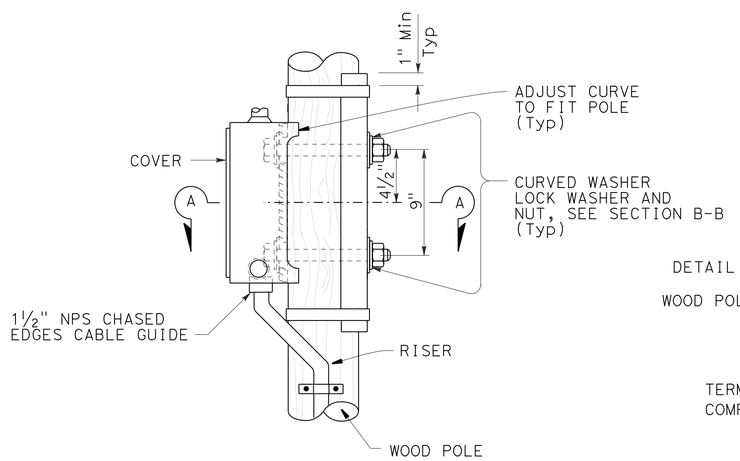

SIDE MOUNTING
TERMINAL COMPARTMENT

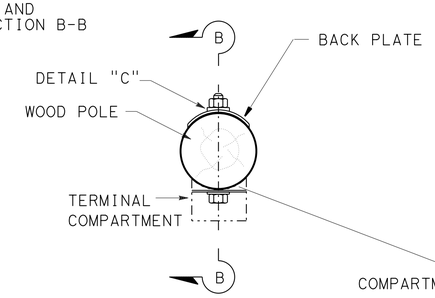

SECTION A-A

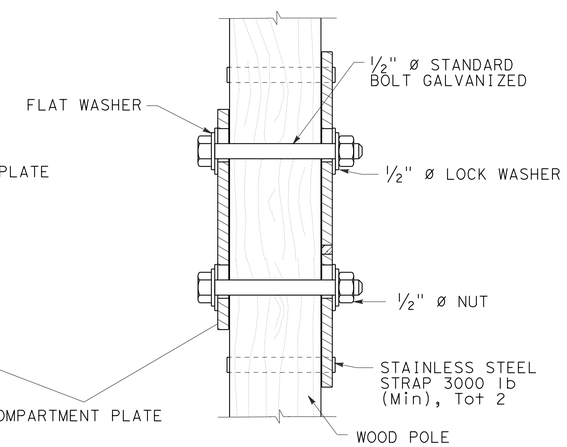

SECTION B-B

NOTE:
THE CONTRACTOR SHALL VERIFY ALL CONTROLLING FIELD DIMENSIONS BEFORE ORDERING OR FABRICATING ANY MATERIAL.

SIGNAL HEAD MOUNTING

For Details Not Shown See ES-4D Sheet

NO SCALE

BRANCH CHIEF JAMES SAGAR	DESIGN	BY T MARCHENKO	CHECKED A MALAK
	DETAILS	BY HUNG NGUYEN	CHECKED A MALAK
	QUANTITIES	BY	CHECKED

STATE OF CALIFORNIA
DEPARTMENT OF TRANSPORTATION

DIVISION OF ENGINEERING SERVICES
DESIGN AND TECHNICAL SERVICES
SPECIAL DESIGNS BRANCH
B

BRIDGE NO. N/A
POST MILE 34.3/34.7

TEMPORARY SIGNAL SYSTEM
WOOD POLE DETAILS

SES-3

(ENGLISH) SPECIAL DESIGNS BRANCH BORDER SHEET (REV. 7-1-09)

ORIGINAL SCALE IN INCHES FOR REDUCED PLANS 0 1 2 3

UNIT: 3619
PROJECT NUMBER & PHASE: 04140000741
CONTRACT NO.: 04-4S6201

DISREGARD PRINTS BEARING EARLIER REVISION DATES

REVISION DATES 3-9-11 10-15-12

SHEET 3 OF 4

FILE => spec_des_br_prj/2011sd/04-4a07u1/04-4s6201_ses3.dgn

USERNAME => s12614 DATE PLOTTED => 14-JAN-2014 TIME PLOTTED => 05:48

DIST	COUNTY	ROUTE	POST MILES TOTAL PROJECT	SHEET No	TOTAL SHEETS
04	Son	1	34.3/34.7	36	57

REGISTERED CIVIL ENGINEER 10/15/12 DATE

7-1-13
PLANS APPROVAL DATE

REGISTERED PROFESSIONAL ENGINEER TAMARA S. MARCHENKO No. C76837 Exp. 12/31/14 CIVIL STATE OF CALIFORNIA

The State of California or its officers or agents shall not be responsible for the accuracy or completeness of electronic copies of this plan sheet.

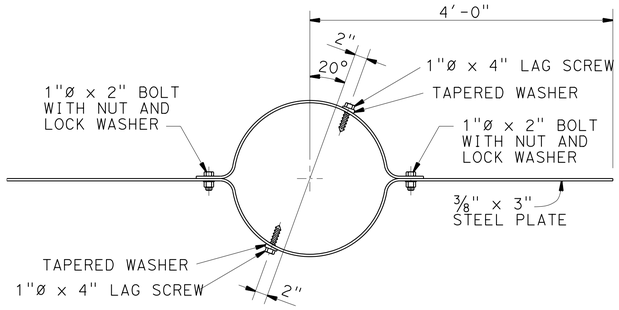

WIND ANCHOR

To be installed perpendicular to luminaire arms and 2'-0" Min below grade

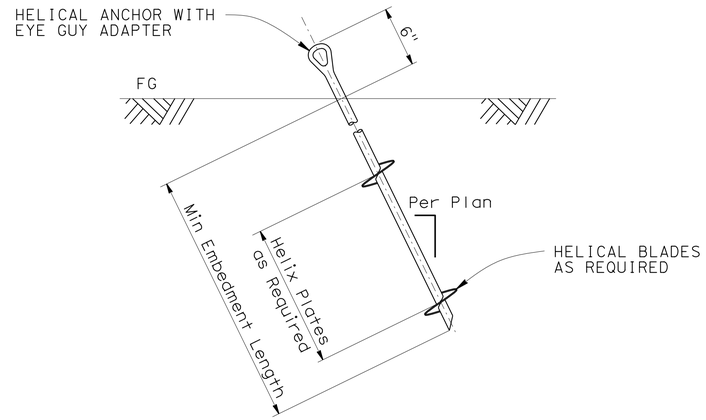

ALTERNATIVE GUY WIRE INSTALLATION DETAIL

(See Helical Anchor Specifications Table)

HELICAL ANCHOR SPECIFICATIONS

Anchor Location	Type	Helix Plate Diameter*	Allowable Min Tension Cap., "Q_a"	Embedment Length (Min)	Installation Torque (Min)**, "T"
Detail	Tension	10"	2500 lb	8'-0"	500 Ft-lb

SPECIFICATION NOTES:

1 During installation the torque will be continuosly monitored and recorded. If a drop in torque is recorded, the anchor must then continue to be inserted past the soft soil layer until Minimum Installation Torque is achieved.

2 Anchors and Hardware to be installed per the manufacturers specifications.

* Number of helical plates is not specified; Contractors choice.

** Adjust accordingly if required, See Note 3.

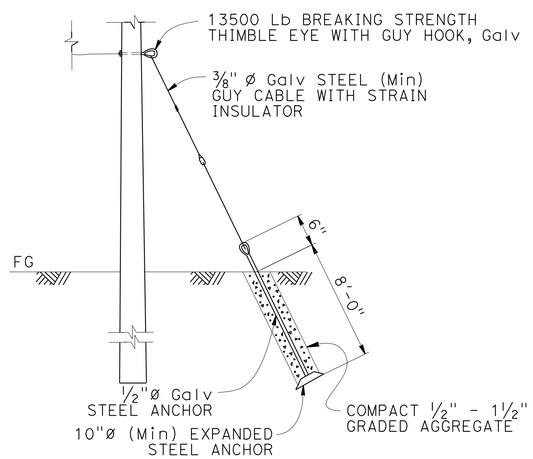

GUY WIRE INSTALLATION DETAIL

NOTES:

1. Verify soil condition, slope, and adjust anchoring to satisfy basic design requirements per Note 7 on SES-1 sheet.

2. Use of alternative Guy Wire Installation Detail requires that the soil bearing capacity be verified by the Contractor.

3. Determine the most appropriate value for k_t based on soil conditions and shall adjust the Min Installation Torque based on the revised k_t. A k_t value of 10 was assumed for the Min Installation Torque shown in the table.

   The Helical Installation torque Formula is $Q_u = k_t * T$ where,

   $Q_u = Q_a * FS$ = Ultimate Helical Anchor Capacity (lb)
   FS = Factor of Safety = 2.0
   Q_a = Allowable Helical Anchor Capacity (lb)
   k_t = Empirical Torque Factor (ft^{-1})
   T = Min Installation Torque (ft-lb)

4. Requests made by Helical Anchor Installation Contractor to reduce the minimum embedment length or Helix ℄ diameter or both, require the Engineer's approval.

5. The Contractor shall locate and mark all of the substructures and utilities. Installation of anchors underneath utilities or subsurface structures is prohibited. Horizontal clearances of anchors shall be determined by the Engineer during construction.

NOTE:
THE CONTRACTOR SHALL VERIFY ALL CONTROLLING FIELD DIMENSIONS BEFORE ORDERING OR FABRICATING ANY MATERIAL.

NO SCALE

BRANCH CHIEF JAMES SAGAR	DESIGN	BY T MARCHENKO	CHECKED A MALAK
	DETAILS	BY H NGUYEN	CHECKED A MALAK
	QUANTITIES	BY	CHECKED

STATE OF CALIFORNIA
DEPARTMENT OF TRANSPORTATION

DIVISION OF ENGINEERING SERVICES
DESIGN AND TECHNICAL SERVICES
SPECIAL DESIGNS BRANCH

B

BRIDGE NO. N/A
POST MILE 34.3/34.7

TEMPORARY SIGNAL SYSTEM
WOOD POLE DETAILS

SES-4

(ENGLISH) SPECIAL DESIGNS BRANCH BORDER SHEET (REV. 7-1-09)

ORIGINAL SCALE IN INCHES FOR REDUCED PLANS 0 1 2 3

UNIT: 3619
PROJECT NUMBER & PHASE: 04140000741
CONTRACT NO.: 04-4S6201

DISREGARD PRINTS BEARING EARLIER REVISION DATES

REVISION DATES 5-9-11 10-15-12

SHEET 4 OF 4

FILE => spec_des_br_prj/2011sd/07-260701/04-4s6201_ses4.dgn

USERNAME => s12614 DATE PLOTTED => 14-JAN-2014 TIME PLOTTED => 05:48

Dist	COUNTY	ROUTE	POST MILES TOTAL PROJECT	SHEET No.	TOTAL SHEETS
04	Son	1	34.3/34.7	37	57

REGISTERED CIVIL ENGINEER

July 20, 2012
PLANS APPROVAL DATE

REGISTERED PROFESSIONAL ENGINEER
Roberta L. McLaughlin
No. C40375
Exp. 3-31-13
CIVIL
STATE OF CALIFORNIA

THE STATE OF CALIFORNIA OR ITS OFFICERS OR AGENTS SHALL NOT BE RESPONSIBLE FOR THE ACCURACY OR COMPLETENESS OF SCANNED COPIES OF THIS PLAN SHEET.

TO ACCOMPANY PLANS DATED 7-1-13

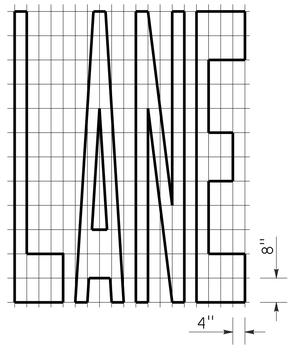

A=24 ft²

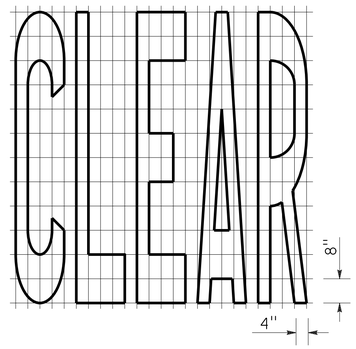

A=27 ft²

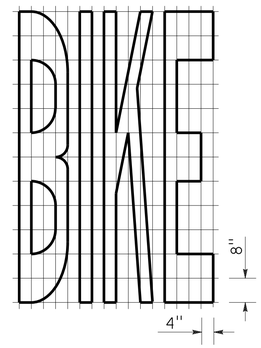

A=21 ft²

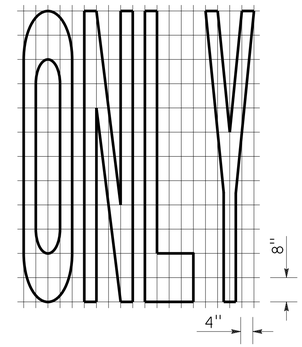

A=22 ft²

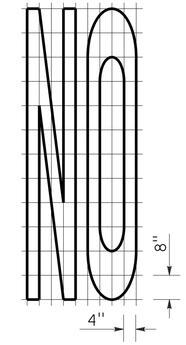

A=14 ft²

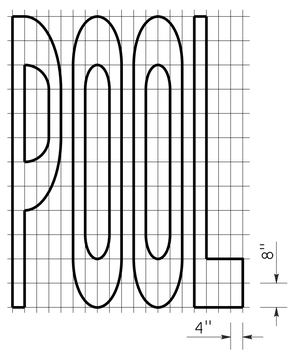

A=23 ft²

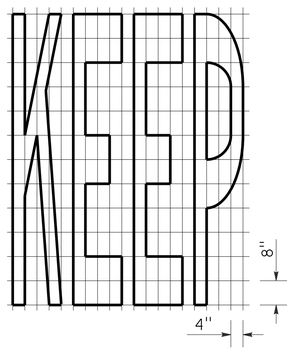

A=24 ft²

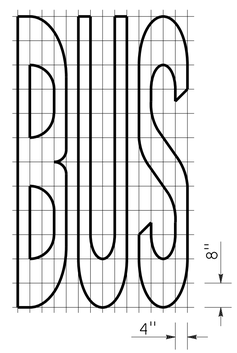

A=20 ft²

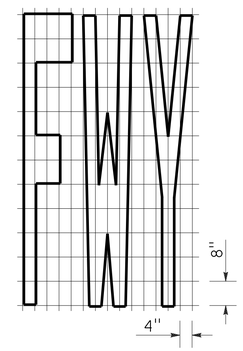

A=16 ft²

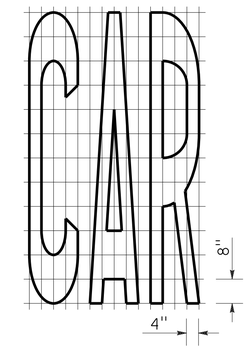

A=17 ft²

WORD MARKINGS			
ITEM	ft²	ITEM	ft²
LANE	24	NO	14
POOL	23	BIKE	21
CAR	17	BUS	20
CLEAR	27	ONLY	22
KEEP	24	FWY	16

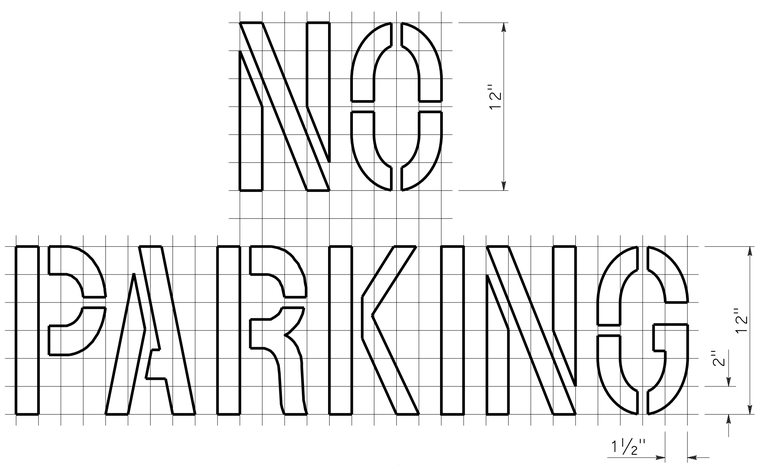

A=2 ft²
See Notes 6 and 7

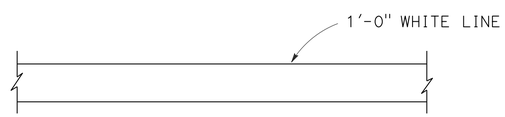

LIMIT LINE (STOP LINE)

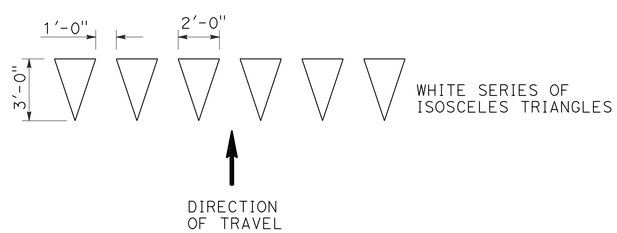

YIELD LINE

NOTES:

1. If a message consists of more than one word, it should read "UP", i.e., the first word should be nearest the driver.
2. The space between words should be at least four times the height of the characters for low speed roads, but not more than ten times the height of the characters. The space may be reduced appropriately where there is limited space because of local conditions.
3. Minor variations in dimensions may be accepted by the Engineer.
4. Portions of a letter, number or symbol may be separated by connecting segments not to exceed 2" in width.
5. The words "NO PARKING" pavement marking is to be used for parking facilities. For typical locations of markings, see Standard Plans A90A and A90B.
6. The words "NO PARKING", shall be painted in white letters no less than 1'-0" high on a contrasting background and located so that it is visible to traffic enforcement officials.

STATE OF CALIFORNIA
DEPARTMENT OF TRANSPORTATION

PAVEMENT MARKINGS WORDS, LIMIT AND YIELD LINES

NO SCALE

RSP A24E DATED JULY 20, 2012 SUPERSEDES STANDARD PLAN A24E
DATED MAY 20, 2011 - PAGE 17 OF THE STANDARD PLANS BOOK DATED 2010.

REVISED STANDARD PLAN RSP A24E

2010 REVISED STANDARD PLAN RSP A24E

6-12-12

Dist	COUNTY	ROUTE	POST MILES TOTAL PROJECT	SHEET No.	TOTAL SHEETS
04	Son	1	34.3/34.7	38	57

Randell D. Hiatt
REGISTERED CIVIL ENGINEER

October 19, 2012
PLANS APPROVAL DATE

REGISTERED PROFESSIONAL ENGINEER
Randell D. Hiatt
No. C50200
Exp. 6-30-13
CIVIL
STATE OF CALIFORNIA

THE STATE OF CALIFORNIA OR ITS OFFICERS OR AGENTS SHALL NOT BE RESPONSIBLE FOR THE ACCURACY OR COMPLETENESS OF SCANNED COPIES OF THIS PLAN SHEET.

TO ACCOMPANY PLANS DATED 7-1-13

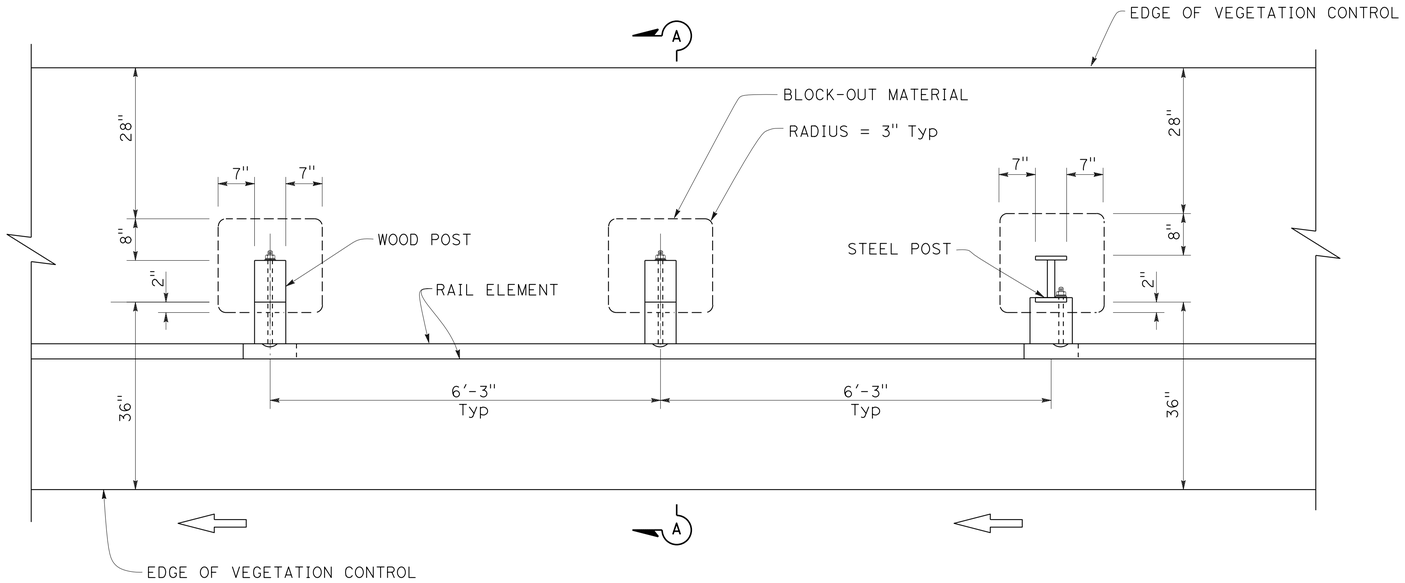

PLAN

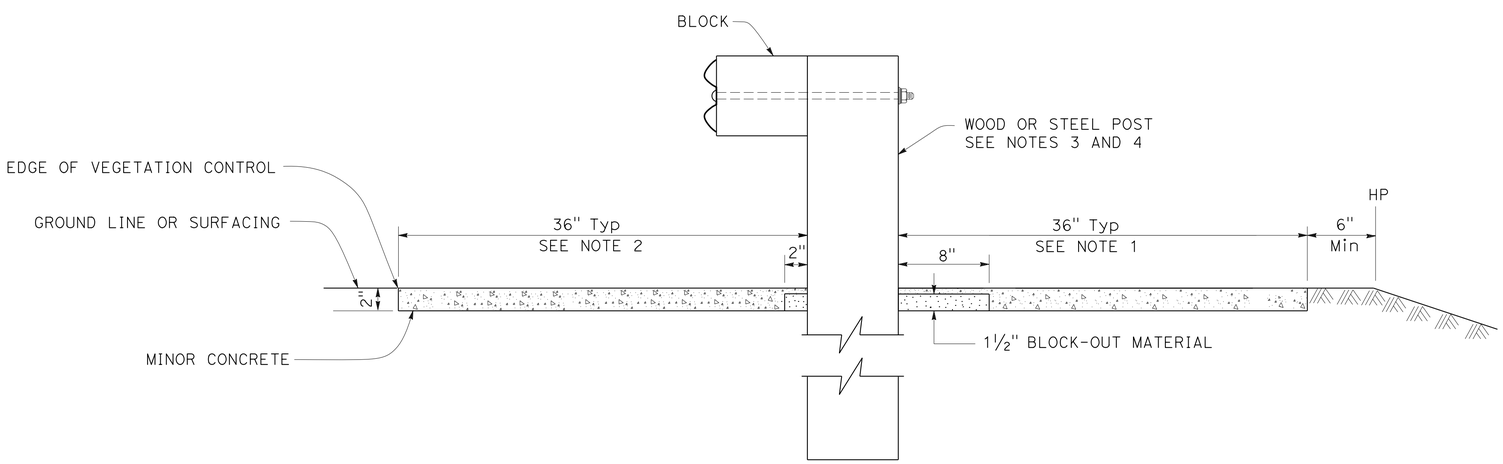

SECTION A-A

NOTES:

1. Where the distance between back of post and hinge point is less than 42", construct vegetation control to 6" from hinge point while maintaining the 8" block-out at back of post. If the 8" block-out at back of post can not be maintained, construct vegetation control flush with the back edge of post.
2. Where dike is constructed under railing, construct vegetation control to back edge of dike. Where paved shoulder is constructed within 36" in front of the post, construct vegetation control to the edge of paved shoulder.
3. For wood post sizes, see Standard Plan A77C1.
4. For steel post sizes, see Standard Plan A77C2.
5. For details not shown, see Standard Plans A77A1 and A77A2.

STATE OF CALIFORNIA
DEPARTMENT OF TRANSPORTATION

METAL BEAM GUARD RAILING TYPICAL VEGETATION CONTROL STANDARD RAILING SECTION

NO SCALE

RSP A77C5 DATED OCTOBER 19, 2012 SUPERSEDES STANDARD PLAN A77C5 DATED MAY 20, 2011 - PAGE 53 OF THE STANDARD PLANS BOOK DATED 2010.

REVISED STANDARD PLAN RSP A77C5

2010 REVISED STANDARD PLAN RSP A77C5

9-26-12

Dist	COUNTY	ROUTE	POST MILES TOTAL PROJECT	SHEET No.	TOTAL SHEETS
04	Son	1	34.3/34.7	39	57

Randell D. Hiatt
REGISTERED CIVIL ENGINEER

October 19, 2012
PLANS APPROVAL DATE

REGISTERED PROFESSIONAL ENGINEER
Randell D. Hiatt
No. C50200
Exp. 6-30-13
CIVIL
STATE OF CALIFORNIA

THE STATE OF CALIFORNIA OR ITS OFFICERS OR AGENTS SHALL NOT BE RESPONSIBLE FOR THE ACCURACY OR COMPLETENESS OF SCANNED COPIES OF THIS PLAN SHEET.

TO ACCOMPANY PLANS DATED 7-1-13

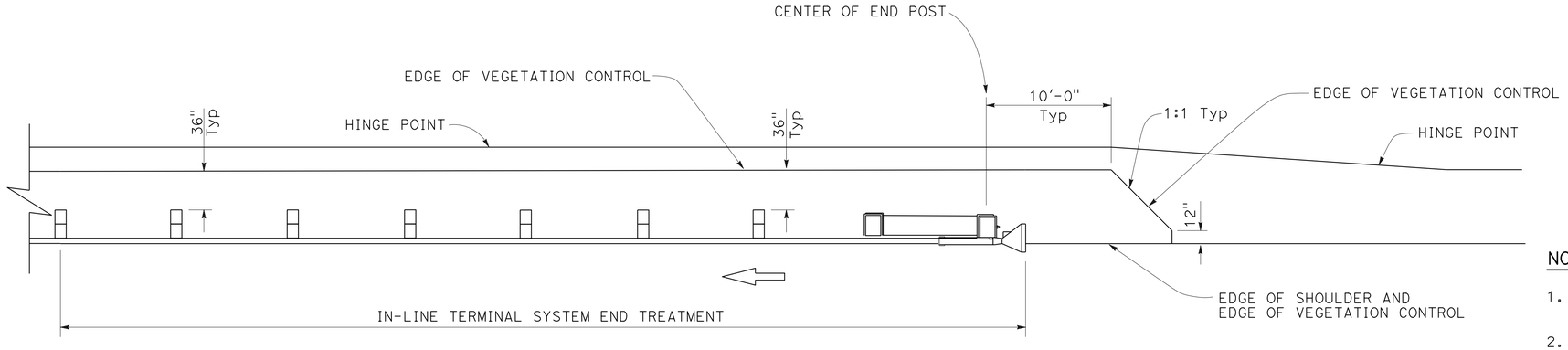

PLAN

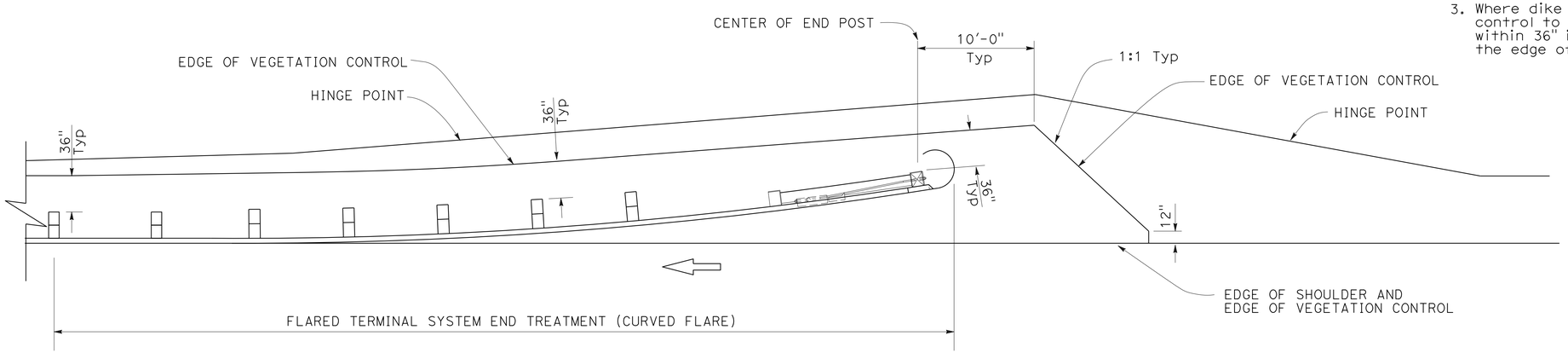

PLAN

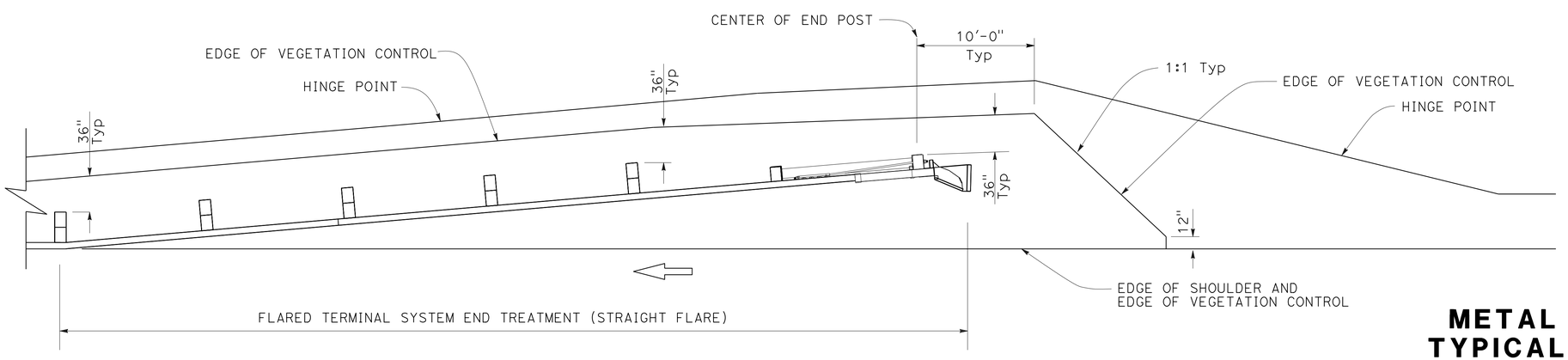

PLAN

NOTES:

1. See Revised Standard Plan RSP A77C5 for additional vegetation control details.
2. Where the distance between back of post and hinge point is less than 42", construct vegetation control to 6" from hinge point while maintaining the 8" block-out at back of post. If the 8" block-out at back of post can not be maintained, construct vegetation control flush with the back edge of post.
3. Where dike is constructed under railing, construct vegetation control to back edge of dike. Where paved shoulder is constructed within 36" in front of the post, construct vegetation control to the edge of paved shoulder.

STATE OF CALIFORNIA
DEPARTMENT OF TRANSPORTATION

METAL BEAM GUARD RAILING TYPICAL VEGETATION CONTROL FOR TERMINAL SYSTEM END TREATMENTS

NO SCALE

RSP A77C6 DATED OCTOBER 19, 2012 SUPERSEDES STANDARD PLAN A77C6
DATED MAY 20, 2011 - PAGE 54 OF THE STANDARD PLANS BOOK DATED 2010.

REVISED STANDARD PLAN RSP A77C6

2010 REVISED STANDARD PLAN RSP A77C6

9-26-12

Dist	COUNTY	ROUTE	POST MILES TOTAL PROJECT	SHEET No.	TOTAL SHEETS
04	Son	1	34.3/34.7	40	57

Glenn DeCou
REGISTERED CIVIL ENGINEER

October 19, 2012
PLANS APPROVAL DATE

REGISTERED PROFESSIONAL ENGINEER
Glenn DeCou
No. C34547
Exp. 9-30-13
CIVIL
STATE OF CALIFORNIA

THE STATE OF CALIFORNIA OR ITS OFFICERS OR AGENTS SHALL NOT BE RESPONSIBLE FOR THE ACCURACY OR COMPLETENESS OF SCANNED COPIES OF THIS PLAN SHEET.

TO ACCOMPANY PLANS DATED 7-1-13

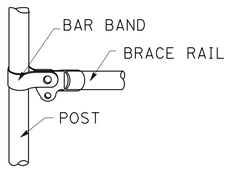

BRACE RAIL

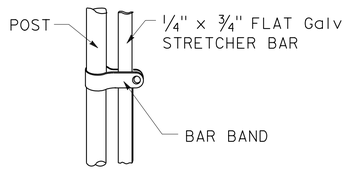

STRETCHER BAR

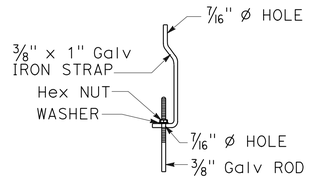

TRUSS TIGHTENER

NOTES:

1. All material for abutment connection to be galvanized.
2. The chain link fabric shall be replaced by barbed wire strands at 12" maximum centers between the double posts.
3. When the width of the culvert makes it necessary to anchor a post to the top of the culvert, a cast iron shoe or other device approved by the Engineer shall be used.
4. Fencing over stream and around headwall may also use Barbed Wire or Wire Mesh fencing with either wood post or steel post installation.
5. See Standard Plan A85 for Chain Link fence dimensions. See Standard Plan A86 for Barbed Wire and Wire Mesh fence dimensions and for wood post and steel post installation.

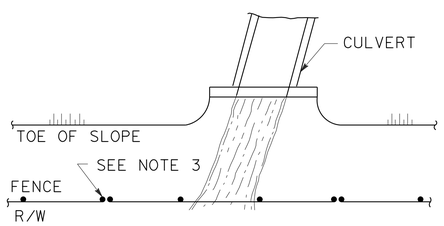

PLAN

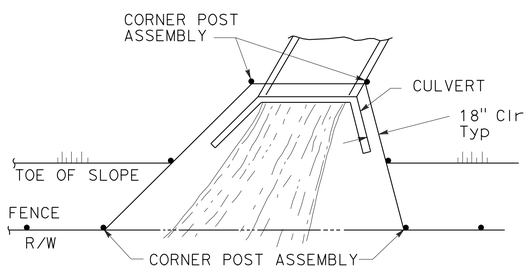

PLAN

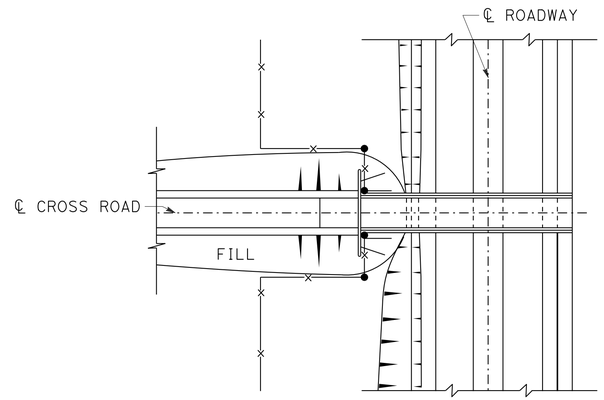

PLAN OF ROADWAY - OVERCROSSING

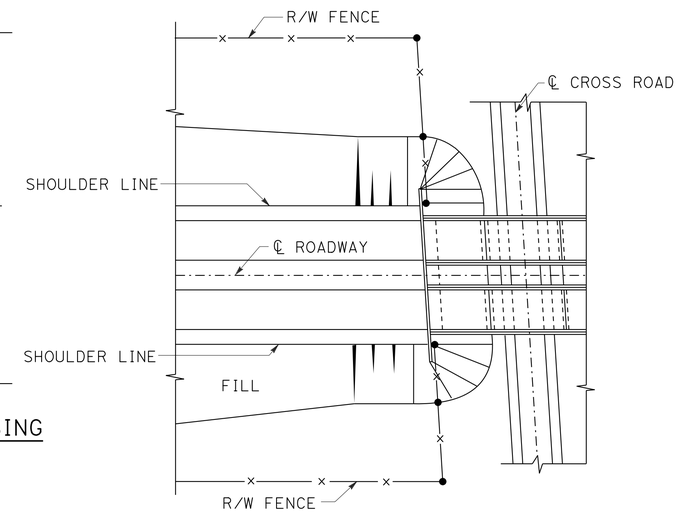

PLAN OF ROADWAY - UNDERCROSSING

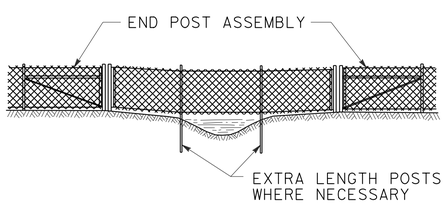

ELEVATION

INSTALLATION OVER STREAM

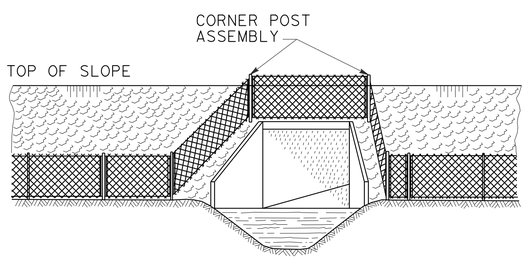

ELEVATION

INSTALLATION AROUND HEADWALL

See Note 4

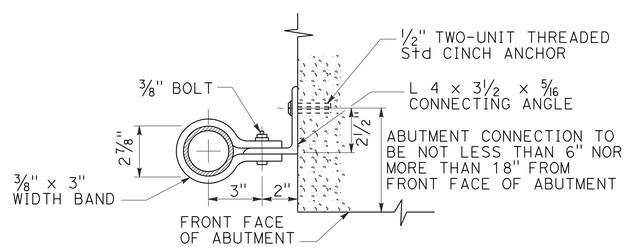

ABUTMENT CONNECTION

TYPICAL INSTALLATION AT BRIDGES

STATE OF CALIFORNIA
DEPARTMENT OF TRANSPORTATION

CHAIN LINK FENCE DETAILS

NO SCALE

RSP A85B DATED OCTOBER 19, 2012 SUPERSEDES STANDARD PLAN A85B
DATED MAY 20, 2011 - PAGE 114 OF THE STANDARD PLANS BOOK DATED 2010.

REVISED STANDARD PLAN RSP A85B

2010 REVISED STANDARD PLAN RSP A85B

7-19-12

TO ACCOMPANY PLANS DATED 7-1-13

Dist	COUNTY	ROUTE	POST MILES TOTAL PROJECT	SHEET No.	TOTAL SHEETS
04	Son	1	34.3/34.7	41	57

REGISTERED CIVIL ENGINEER

October 19, 2012
PLANS APPROVAL DATE

REGISTERED PROFESSIONAL ENGINEER Glenn DeCou No. C34547 Exp. 9-30-13 CIVIL STATE OF CALIFORNIA

THE STATE OF CALIFORNIA OR ITS OFFICERS OR AGENTS SHALL NOT BE RESPONSIBLE FOR THE ACCURACY OR COMPLETENESS OF SCANNED COPIES OF THIS PLAN SHEET.

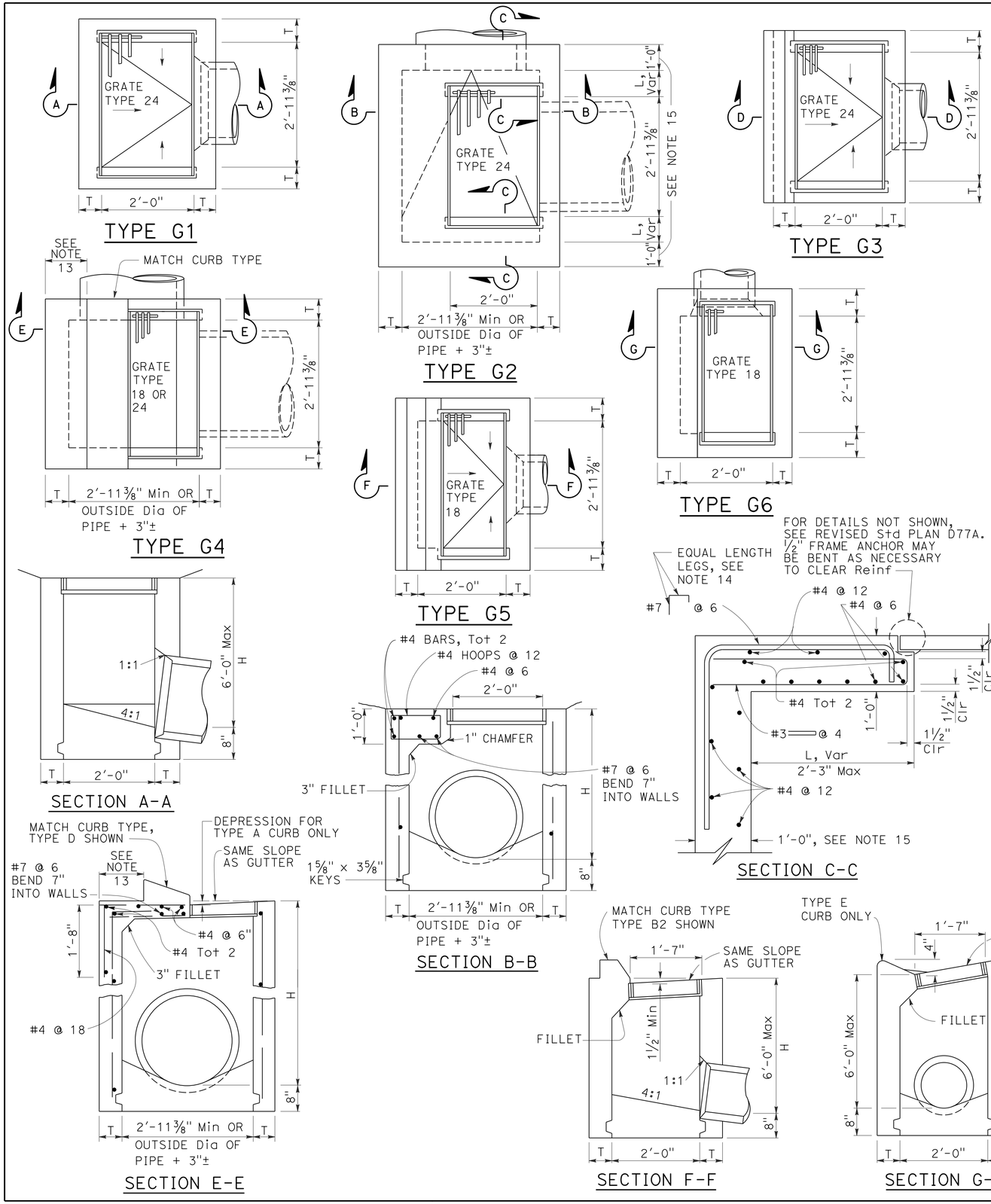

NOTES:

1. "H" is the difference in elevation between the outlet pipe flow line and the normal gutter grade line undepressed.
2. For "T" wall thickness, see Table A below.
3. Wall reinforcing not required when "H" is 8'-0" or less and the unsupported width or length is 7'-0" or less. Walls exceeding these limits shall be reinforced with #4 bars @ 1'-6" ± centers placed 1½" clear to inside of box unless otherwise shown.
4. Inlet bottom reinforcing not required. See Standard Plan D74C for alternative reinforced bottom and alternative half round bottom.
5. Steps-None required where "H" is less than 2'-6". Where "H" is 2'-6" or more, install steps with lowest rung 1'-0" above the floor and highest rung not more than 6" below top of inlet. The distance between steps shall not exceed 1'-0" and shall be uniform throughout the length of the wall. Place steps in the wall without an opening. Steps inserts may be substituted for the bar steps. Step inserts shall comply with State Industrial Safety requirements. See Standard Plan D74C for step details.
6. Details shown apply to both metal and concrete pipe.
7. Pipe(s) can be placed in any wall.
8. Curb section shall match adjacent curb.
9. Basin floors shall have wood trowel finish and a minimum slope of 12:3 from all directions toward outlet pipe.
10. Set inlet so that grate bars are parallel to direction of principal surface flow.
11. See Revised Standard Plans D77A and D77B for grate and frame details and weights of miscellaneous iron and steel.
12. See Standard Plan D78A for gutter depression details.
13. This dimenison will vary with different grates, curbs types, box width and wall thickness.
14. Bar may be rotated as necessary to clear opening. Where "L" is 6" or less, bar may be omitted.
15. Where "L" is 6" or less, wall thickness shall be as shown in Table A.
16. Cast-in-place inlets to be formed around all pipes/stubs intersecting the inlet, and concrete poured in one continuous operation. Precast inlets shall have mortared connections conforming to details for Type GCP Inlet shown on Standard Plan D75B. See Standard Specifications for mortar composition.

TABLE A

CONCRETE QUANTITIES				
TYPE	H=3'-0" TO 8'-0" (T=6")		H=8'-1" TO 20'-0" (T=8")	
	H=3'-0" (CY)	ADDITIONAL PCC PER FOOT (CY)	H=8'-1" (CY)	ADDITIONAL PCC PER FOOT (CY)
G-1	0.95	0.220	See Note A	SEE NOTE A
G-2*	1.31	0.255	3.50	0.357
G-3	1.03	0.220	See Note A	SEE NOTE A
G-4* (TYPE 24)	1.27	0.255	3.48	0.357
G-4* (TYPE 18)	1.30	0.255	3.50	0.357
G-5	1.02	0.220	SEE NOTE A	SEE NOTE A
G-6	1.04	0.220	SEE NOTE A	SEE NOTE A

TABLE BASED ON 8" FLOOR SLAB. NO DEDUCTIONS ARE TO BE MADE TO THESE QUANTITIES BECAUSE OF PIPE OPENINGS, DIFFERENT FLOOR ALTERNATIVES OR DIFFERENT CURB TYPES. * QUANTITIES FOR TYPE G-2 AND G-4 INLETS BASED ON THE MINIMUM INTERIOR DIMENSIONS.

NOTE A:

Maximum allowable height 6'-0".

STATE OF CALIFORNIA
DEPARTMENT OF TRANSPORTATION

DRAINAGE INLETS

NO SCALE

RSP D73 DATED OCTOBER 19, 2012 SUPERSEDES STANDARD PLAN D73 DATED MAY 20, 2011 - PAGE 156 OF THE STANDARD PLANS BOOK DATED 2010.

REVISED STANDARD PLAN RSP D73

2010 REVISED STANDARD PLAN RSP D73

Dist	COUNTY	ROUTE	POST MILES TOTAL PROJECT	SHEET No.	TOTAL SHEETS
04	Son	1	34.3/34.7	42	57

Raymond Don Tsztoo
REGISTERED CIVIL ENGINEER

April 19, 2013
PLANS APPROVAL DATE

Raymond Don Tsztoo No. C37332 Exp. 6-30-14 CIVIL — REGISTERED PROFESSIONAL ENGINEER — STATE OF CALIFORNIA

THE STATE OF CALIFORNIA OR ITS OFFICERS OR AGENTS SHALL NOT BE RESPONSIBLE FOR THE ACCURACY OR COMPLETENESS OF SCANNED COPIES OF THIS PLAN SHEET.

TO ACCOMPANY PLANS DATED 7-1-13

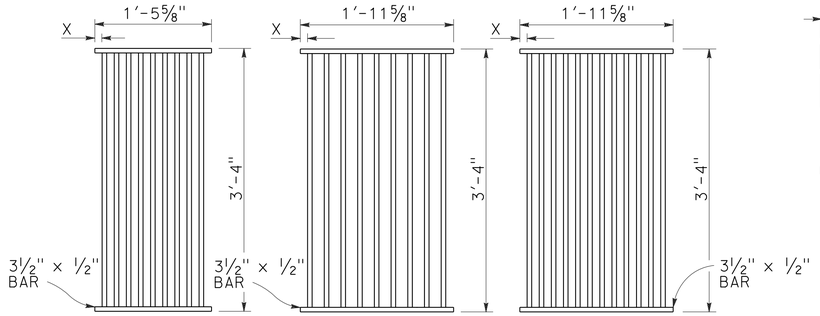

TYPE 18-9

1⅜" Clear spacing. Use within the roadbed on highways where bicycles and pedestrians are excluded.

TYPE 24-9

2" Clear spacing. Use in locations off the roadbed on all types of highways.

TYPE 24-12

1⅜" Clear spacing. Use within the roadbed on highways where bicycles and pedestrians are excluded.

RECTANGULAR GRATE DETAILS

(See table below)

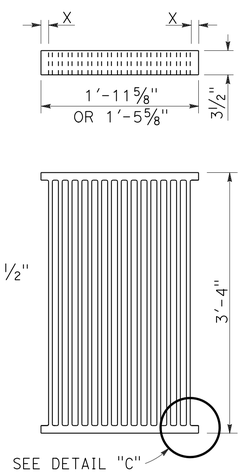

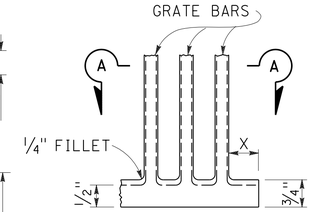

DETAIL "C"

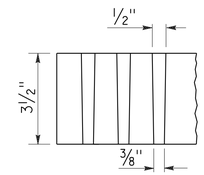

SECTION A-A

ALTERNATIVE CAST DUCTILE IRON GRATE OR CAST CARBON STEEL GRATE

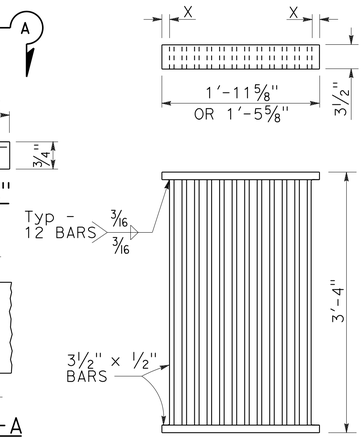

ALTERNATIVE WELDED GRATE

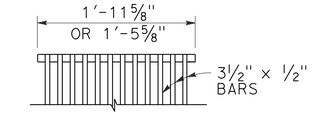

CAST END BLOCK

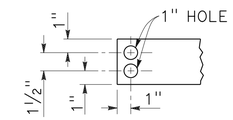

END OF BAR

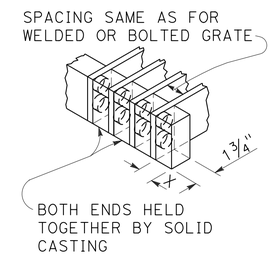

ALTERNATIVE CAST DUCTILE IRON OR CAST CARBON STEEL END BLOCK GRATE

NOTES:

1. Grate type numbers refer to approximate width of grate in inches and number of bars, respectively.
2. Contractor has the option of using cast ductile iron, cast carbon steel, welded, bolted, or cast end block grate.
3. Rounded top of bars optional on all grates.
4. Pipe inlets with a grate shall be placed so that bars parallel direction of principle surface flow.
5. Complete joint penetration butt welds may be substituted for the fillet welds on all anchors.
6. Standard square, hexagon, round or equivalent headed anchors may be substituted for the right angle hooks on the anchors shown on this plan.
7. Grate and frame weights are based on welded grates (weights of face angles, steps, protection bars, etc. are not included).
8. Connect chain to grate and frame only at locations shown on the plans. When chain is required, do not use cast ductile iron grates.

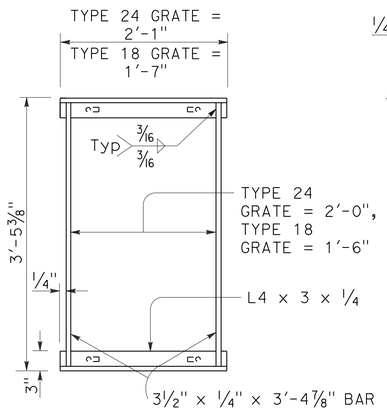

TYPICAL FRAME

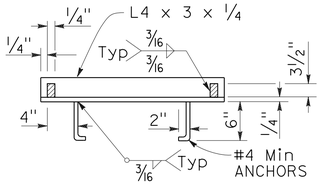

CROSS SECTION

(Thru frame)

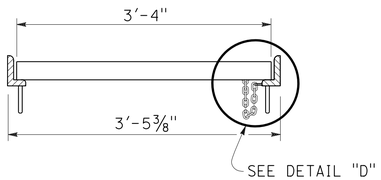

LONGITUDINAL SECTION

(Thru frame and grate)

RECTANGULAR FRAME DETAILS

(For all rectangular grates)

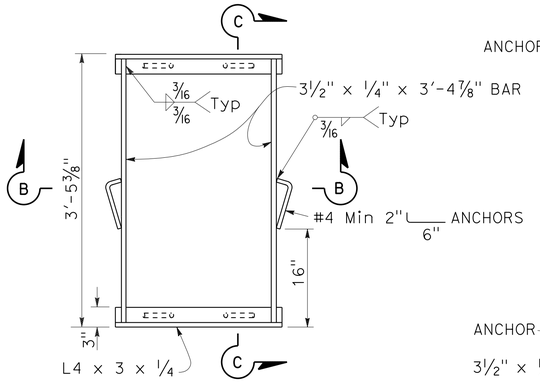

TYPICAL FRAME

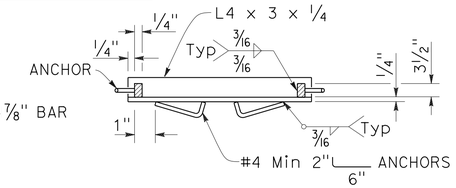

SECTION B-B

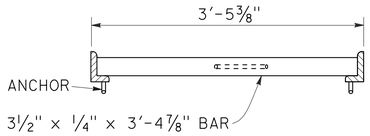

SECTION C-C

ALTERNATIVE ANCHOR FOR RECTANGULAR FRAME

(For details not shown, See Rectangular Frame Details)

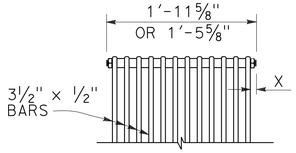

BOLTED END BLOCK

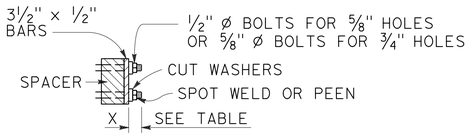

BOLTING DETAIL

ALTERNATIVE BOLTED GRATE

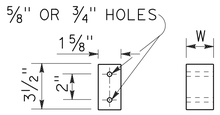

BAR SPACER

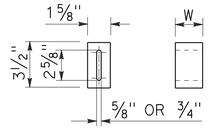

ALTERNATIVE SPACER

W = 1⅜" or 2"

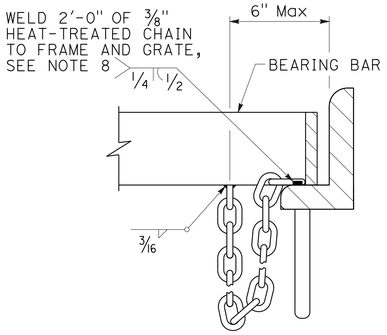

DETAIL "D"

(Steel grates only)

GRATE BAR SPACING TABLE

TYPE	No. OF BARS	CLEAR BAR SPACING	X
18-9	9	1⅜"	1 1/16"
24-9	9	2"	1 9/16"
24-12	12	1⅜"	1¼"

INLET TYPE	COVER TYPE	WEIGHT LB
OS	PLATE	174
OL-7	PLATE	170
OL-10	PLATE	170
OL-14	PLATE	170
OL-21	PLATE	170
OCP	PLATE	112
OCPI	PLATE	112
OCPI	REDWOOD	42
OMP	PLATE	177
OMPI	PLATE	177

INLET TYPE	GRATE TYPE	No. OF GRATES	WEIGHT LB
GDO	24-12	2	634
GOL-7	24-12	1	326
GOL-10	24-12	1	326
GO,G1,G2,G3,G4 (TYPE 24)	24-9	1	263
	24-12	1	326
G4 (TYPE 18),G5,G6	18-9	1	249
GT1	18-9	2	498
GT2	18-9	2	498
GT3	24-12	2	652
GT4	24-12	2	652
TRASH RACK			22
GRATE CHAIN			3

BASIS FOR Misc IRON & STEEL FINAL PAY WEIGHTS FOR DRAINAGE INLETS

(See Note 7)

STATE OF CALIFORNIA
DEPARTMENT OF TRANSPORTATION

GRATE DETAILS No. 1

NO SCALE

RSP D77A DATED APRIL 19, 2013 SUPERSEDES RSP D77A DATED JULY 20, 2012 AND STANDARD PLAN D77A DATED MAY 20, 2011 - PAGE 164 OF THE STANDARD PLANS BOOK DATED 2010.

REVISED STANDARD PLAN RSP D77A

2010 REVISED STANDARD PLAN RSP D77A

4-4-13

Dist	COUNTY	ROUTE	POST MILES TOTAL PROJECT	SHEET No.	TOTAL SHEETS
04	Son	1	34.3/34.7	43	57

Raymond Don Tsztoo
REGISTERED CIVIL ENGINEER

April 19, 2013
PLANS APPROVAL DATE

REGISTERED PROFESSIONAL ENGINEER Raymond Don Tsztoo No. C37332 Exp. 6-30-14 CIVIL STATE OF CALIFORNIA

THE STATE OF CALIFORNIA OR ITS OFFICERS OR AGENTS SHALL NOT BE RESPONSIBLE FOR THE ACCURACY OR COMPLETENESS OF SCANNED COPIES OF THIS PLAN SHEET.

TO ACCOMPANY PLANS DATED 7-1-13

2010 REVISED STANDARD PLAN RSP D77B

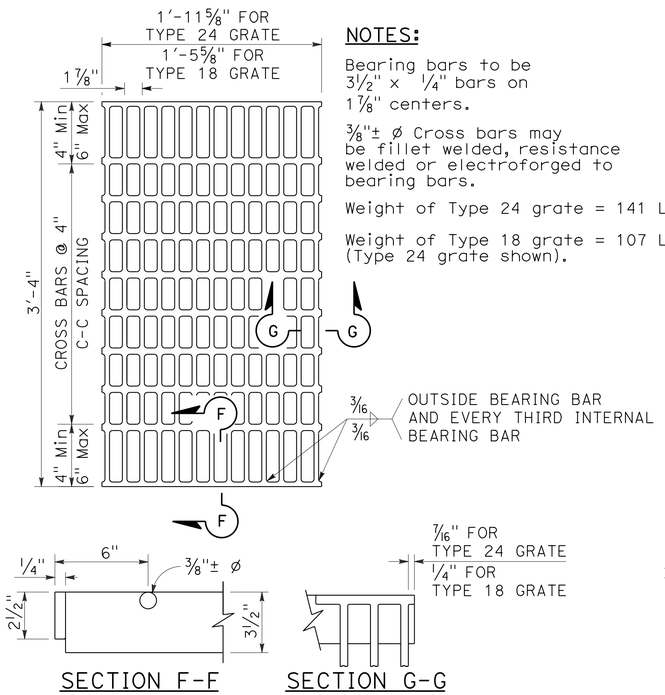

SECTION F-F SECTION G-G

TYPE 18-10 AND 24-13 GRATE

(Welded Steel)

NOTES:

Bearing bars to be 3½" x ¼" bars on 1⅞" centers.

⅜"± ø Cross bars may be fillet welded, resistance welded or electroforged to bearing bars.

Weight of Type 24 grate = 141 LBS.

Weight of Type 18 grate = 107 LBS. (Type 24 grate shown).

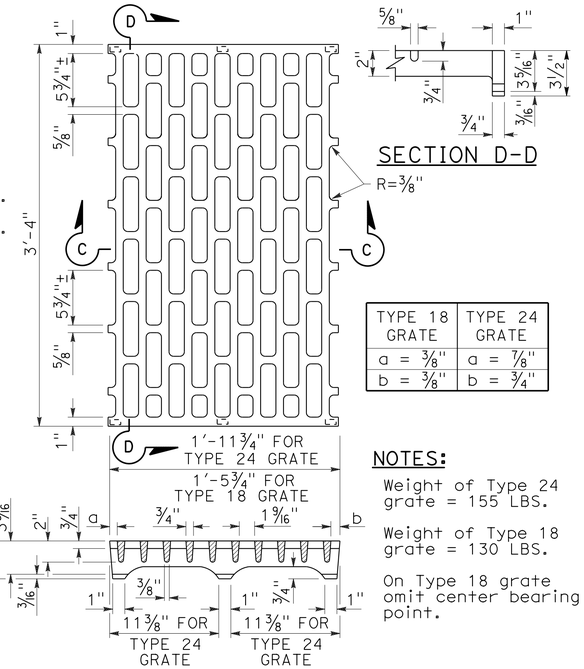

SECTION D-D

TYPE 18 GRATE	TYPE 24 GRATE
a = ⅜"	a = ⅞"
b = ⅜"	b = ¾"

SECTION C-C

NOTES:

Weight of Type 24 grate = 155 LBS.

Weight of Type 18 grate = 130 LBS.

On Type 18 grate omit center bearing point.

TYPE 18-8C AND 24-10C GRATE

(Cast ductile iron)

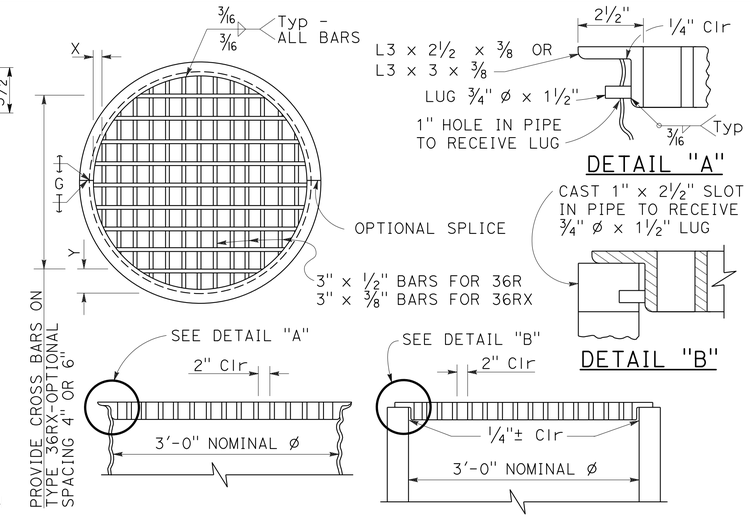

DETAIL "A"

DETAIL "B"

TYPE 36R AND 36RX GRATE DETAILS

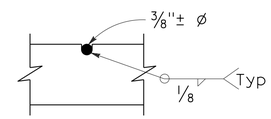

⅜"± ø Cross bars may be fillet welded, resistance welded or electroforged to bearing bars.

CROSS BAR DETAIL TYPE 36RX GRATE (WELDED STEEL)

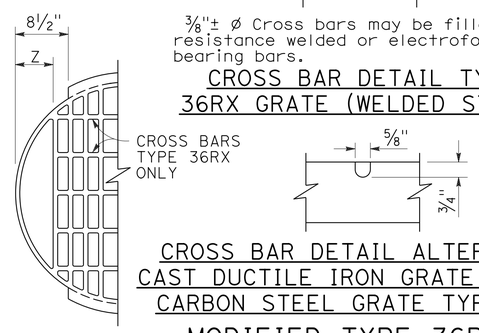

CROSS BAR DETAIL ALTERNATIVE CAST DUCTILE IRON GRATE OR CAST CARBON STEEL GRATE TYPE 36RX

MODIFIED TYPE 36R AND 36RX GRATE FOR ODI INLET

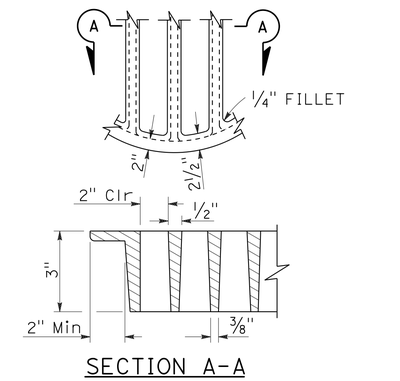

SECTION A-A

ALTERNATIVE CAST DUCTILE IRON GRATE OR CAST CARBON STEEL GRATE TYPE 36R AND 36RX

NOTES:

1. When alternative grates are allowed - Final pay based on alternative with the lesser weight.
2. Use frame shown on Standard Plan D74A, D74B or RSP D77A as appropriate.
3. When Type 24-10S, 24-12X or 24-13 grates are used with GDO Inlets, a ¼" x 3½" x 3'-4⅞" steel bar shall be welded across the center of inlet frame to separate the individual grates.
4. See Revised Standard Plan RSP D77A for connecting chain to welded grate and frame. When chain is required, do not use cast ductile iron grate.

BASIS FOR Misc IRON AND STEEL FINAL PAY WEIGHTS FOR DRAINAGE INLETS

INLET TYPE	GRATE TYPE	No. OF GRATES	WEIGHT LB
GDO (SEE NOTE 4)	24-10C	2	391
	24-10S	2	456
	24-12X	2	473
	24-13	2	374
GO,GOL,G1,G2, G3,G4 (TYPE 24)	24-10C	1	202
	24-10S	1	229
	24-12X	1	239
	24-13	1	188
G4 (TYPE 18) G5,G6	18-8S	1	187
	18-9X	1	187
	18-10	1	149
GT1,GT2	18-8S	2	374
	18-9X	2	374
	18-10	2	298
GT3,GT4	24-10C	2	404
	24-10S	2	458
	24-12X	2	478
	24-13	2	376
ODI	36RX (Mod)	1	196
GMP,GCP,GCPI	36RX	1	215
ODI	36R (Mod)	1	220
GMP,GCP,GCPI	36R	1	236
TRASH RACK			22
GRATE CHAIN			3

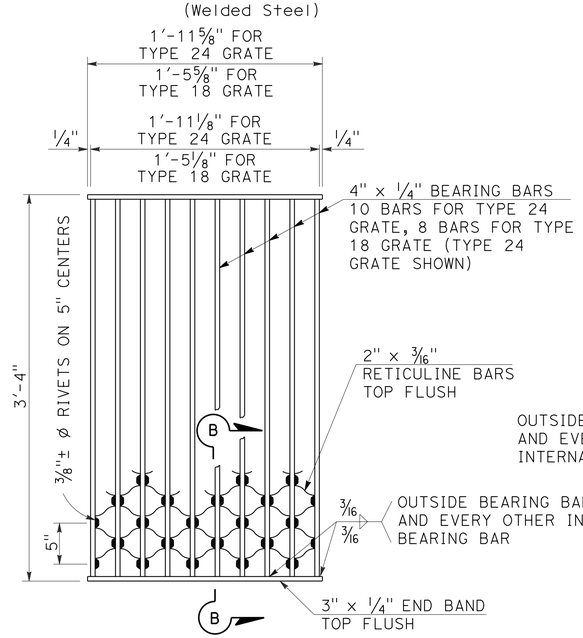

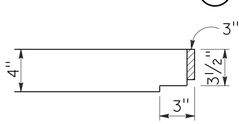

SECTION B-B

NOTES:

Weight of Type 24 grate = 182 LBS.
Weight of Type 18 grate = 145 LBS.

TYPE 18-8S AND 24-10S GRATE

(Welded Steel) Reticuline type

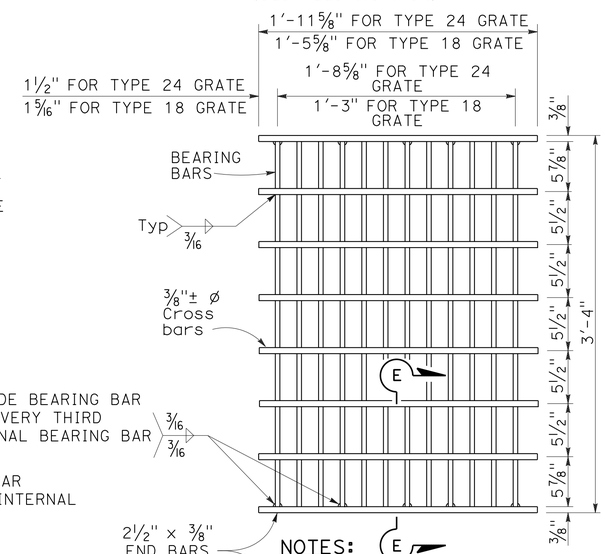

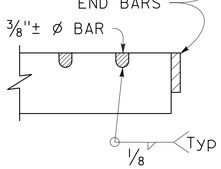

SECTION E-E

NOTES:

Bearing bars to be 3½" x ⅜" bars on 1⅞" centers.

12 Bars for Type 24 grate - 9 bars for Type 18 grates. (Type 24 grate shown).

Weight of Type 24 grate = 192 LBS.

Weight of Type 18 grate = 145 LBS.

⅜"± ø Cross bars may be fillet welded, resistance welded or electroforged to bearing bars.

TYPE 18-9X AND 24-12X GRATE

(Welded Steel)

GRATE BAR SPACING TABLE

TYPE	No. OF BARS	CLEAR BAR SPACING	X	Y 4" SPACING	Y 6" SPACING	Z
36R	13	2"	2⅛"	-	-	-
36RX (STEEL)	15	2"	9/16"	3¾"	5¾"	-
36RX (CAST)	13	2"	2⅛"	3¾"	5¾"	-
36R Mod	12	2"	2⅛"	-	-	5"
36RX Mod (STEEL)	13	2"	9/16"	3¾"	5¾"	5 11/16"
36RX Mod (CAST)	12	2"	2⅛"	3¾"	5¾"	5"

STATE OF CALIFORNIA
DEPARTMENT OF TRANSPORTATION

GRATE DETAILS No. 2

NO SCALE

RSP D77B DATED APRIL 19, 2013 SUPERSEDES RSP D77B DATED JULY 20, 2012 AND STANDARD PLAN D77B DATED MAY 20, 2011 - PAGE 165 OF THE STANDARD PLANS BOOK DATED 2010.

REVISED STANDARD PLAN RSP D77B

4-4-13

Dist	COUNTY	ROUTE	POST MILES TOTAL PROJECT	SHEET No.	TOTAL SHEETS
04	Son	1	34.3/34.7	44	57

REGISTERED CIVIL ENGINEER

October 21, 2011
PLANS APPROVAL DATE

REGISTERED PROFESSIONAL ENGINEER
Tillat Satter
No. C42892
Exp. 3-31-12
CIVIL
STATE OF CALIFORNIA

THE STATE OF CALIFORNIA OR ITS OFFICERS OR AGENTS SHALL NOT BE RESPONSIBLE FOR THE ACCURACY OR COMPLETENESS OF SCANNED COPIES OF THIS PLAN SHEET.

TO ACCOMPANY PLANS DATED 7-1-13

2010 REVISED STANDARD PLAN RSP B11-47

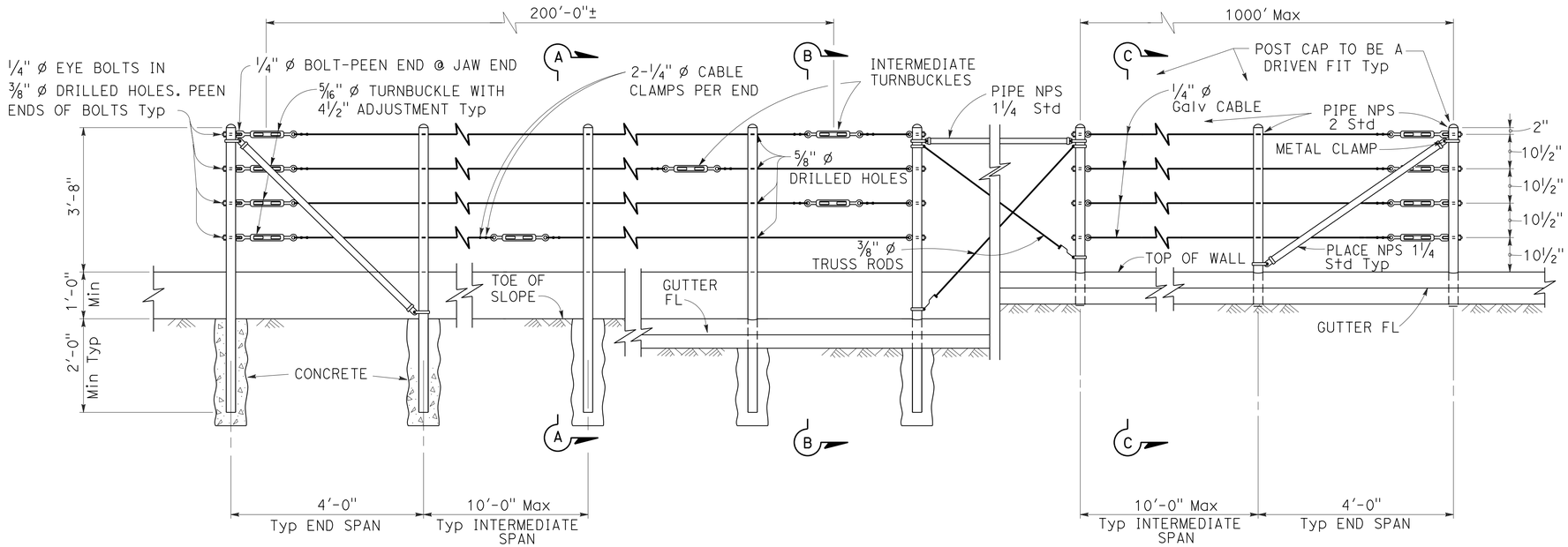

EXISTING WALL (WITHOUT GUTTER)
Existing

RETAINING WALL (WITH GUTTER)
Existing

RETAINING WALL (WITH GUTTER)
New construction

ELEVATION

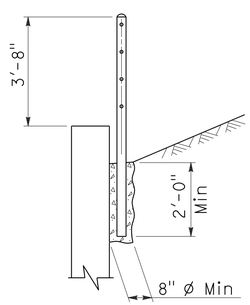

SECTION A-A
Existing

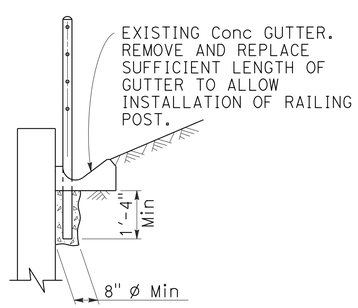

SECTION B-B
Existing

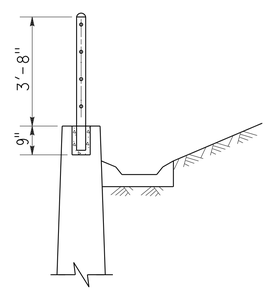

SECTION C-C
New construction

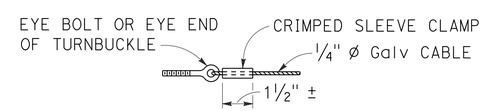

ALTERNATIVE CABLE CONNECTION

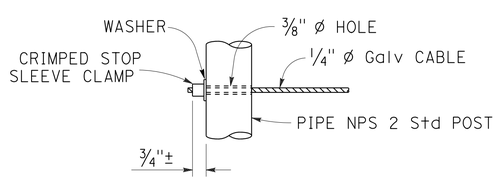

ALTERNATIVE DEAD END ANCHORAGE

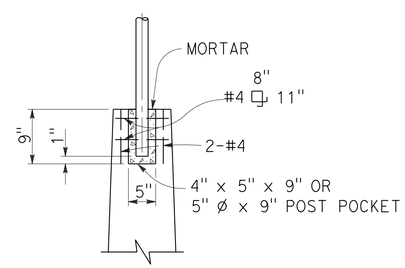

POST POCKET

NOTES:

1. Maximum distance between turnbuckles shall be 200'-0"±.
2. Intermediate turnbuckles to be placed in adjacent spans.
3. Cable shall not be spliced between intermediate turnbuckles and end posts.
4. Posts to be vertical.
5. Alignment of holes in posts may vary to conform to slope of top of retaining wall.
6. The Contractor shall verify all dependent dimensions in the field before ordering or fabricating any material.
7. Line posts shall be braced horizontally and trussed diagonally in both directions at intervals not to exceed 1000'.
8. Post pockets to be centered in top of wall.
9. Typical end spans, braced in both directions, shall be constructed at changes in line where the angle of deflection is 15° or more.
10. Provide thimbles at all cable loops.

STATE OF CALIFORNIA
DEPARTMENT OF TRANSPORTATION

CABLE RAILING

NO SCALE

RSP B11-47 DATED OCTOBER 21, 2011 SUPERSEDES STANDARD PLAN B11-47 DATED MAY 20, 2011 - PAGE 293 OF THE STANDARD PLANS BOOK DATED 2010.

REVISED STANDARD PLAN RSP B11-47

DIST	COUNTY	ROUTE	POST MILES TOTAL PROJECT	SHEET NO.	TOTAL SHEETS
04	Son	1	34.3/34.7	45	57

Jeffrey G. McRae
REGISTERED ELECTRICAL ENGINEER

January 20, 2012
PLANS APPROVAL DATE

REGISTERED PROFESSIONAL ENGINEER
Jeffrey G. McRae
No. E14512
Exp. 6-30-12
ELECTRICAL
STATE OF CALIFORNIA

THE STATE OF CALIFORNIA OR ITS OFFICERS OR AGENTS SHALL NOT BE RESPONSIBLE FOR THE ACCURACY OR COMPLETENESS OF SCANNED COPIES OF THIS PLAN SHEET.

TO ACCOMPANY PLANS DATED 7-1-13

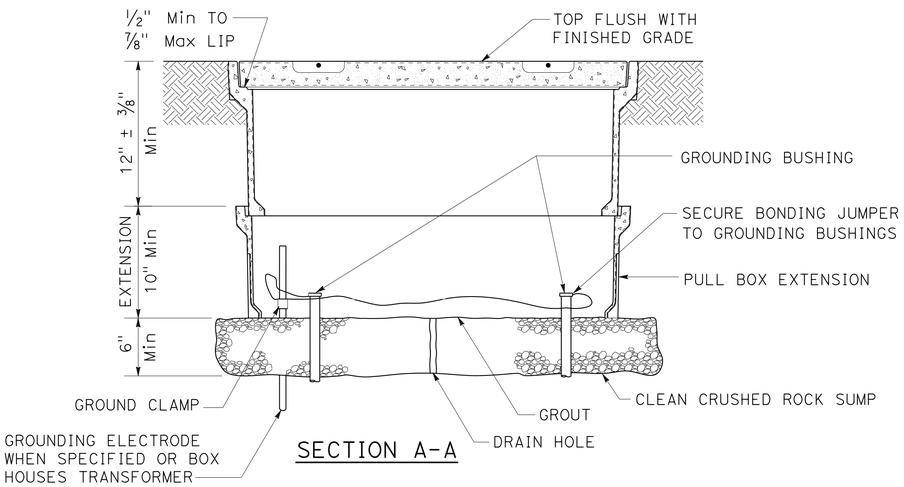

SECTION A-A

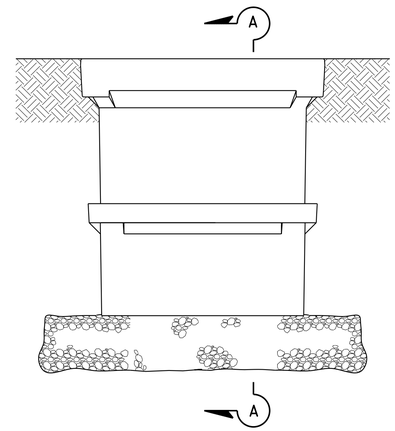

SIDE VIEW

INSTALLATION DETAILS

DETAIL A

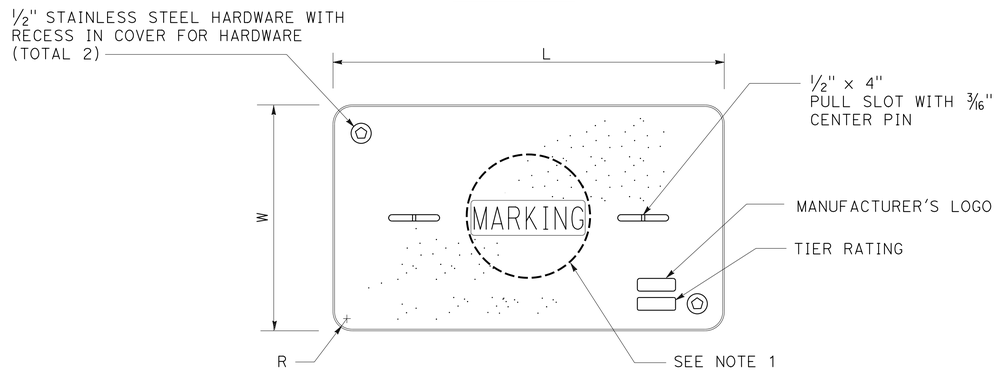

COVER TOP VIEW

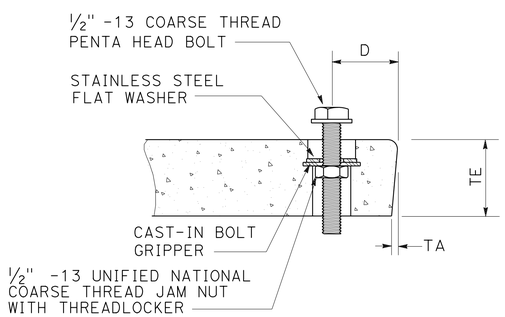

TYPICAL COVER CAPTIVE BOLT

OR SIMILAR

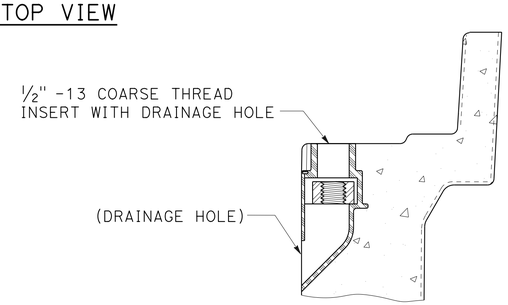

TYPICAL THREADED INSERT

OR SIMILAR

NOTES ON PULL BOXES:

1. Pull box covers must be marked as follows: "SERVICE" Service circuits between service point and service disconnect; "SPRINKLER-CONTROL" sprinkler control circuits, 50 V or less; "CALTRANS" on all pull boxes, except pull boxes marked "SPRINKLER-CONTROL"; and "TELEPHONE" Telephone service;

   A) No. 3½ pull box.
      1) "SIGNAL" - Traffic signal circuits with or without street or sign lighting circuits.
      2) "ST LIGHTING" - Street or sign lighting circuits where voltage is under 600 V.

   B) No. 5, 6, 9 or 9A pull box.
      1) "TRAFFIC SIGNAL" - Traffic signal circuits with or without street or sign lighting circuits.
      2) "STREET LIGHTING" - Street or sign lighting circuits where voltage is under 600 V.
      3) "STREET LIGHTING-HIGH VOLTAGE" - Street or sign lighting circuits where voltage is above 600 V.
      4) "IRRIGATION" - Circuits to irrigation controller 120 V or more.
      5) "RAMP METER" - Ramp meter circuits.
      6) "COUNT STATION" - Count or speed monitor circuits.
      7) "COMMUNICATIONS" - Communication circuits.
      8) "TOS COMMUNICATIONS" - TOS communication line.
      9) "TOS POWER" - TOS power.
      10) "TDC POWER" - Telephone demarcation cabinet power.
      11) "CCTV" - Closed circuit television circuits.
      12) "TMS" - Traffic monitoring station circuits.
      13) "CMS" - Changeable message sign circuits.
      14) "HAR" - Highway advisory radio circuits.

2. The nominal dimensions of the opening in which the cover sets must be the same as the cover dimensions (L and W) plus ⅛" or greater.

3. Covers and boxes must be interchangeable with California Standard. When interchanged with a standard, the top surfaces must be flush within ⅛". Top outside radius of covers and pull boxes must have a ⅛" radius.

4. Pull box extension may be another pull box as long as the bottom edge of the pull box can fit into the cover opening.

DIMENSION TABLE

PULL BOX	PULL BOX			COVER						
	MINIMUM DEPTH BOX	MINIMUM DEPTH EXTENSION	MAXIMUM WEIGHT	L	W	R	TE	TA	D	MAXIMUM WEIGHT
No. 3½	12"	N/A	40 lb	1' - 3⅜"	10⅛"	1⅜"	2"	⅛"	1¾"	30 lb
No. 5	12"	10"	55 lb	1' - 11¼"	1' - 1¾"	1⅜"	2"	⅛"	1¾"	60 lb
No. 6	12"	10"	70 lb	2' - 6½"	1' - 5½"	1⅜"	2"	⅛"	2"	85 lb

STATE OF CALIFORNIA
DEPARTMENT OF TRANSPORTATION

ELECTRICAL SYSTEMS (PULL BOX)

NO SCALE

RSP ES-8A DATED JANUARY 20, 2012 SUPPLEMENTS THE STANDARD PLANS BOOK DATED 2010.

REVISED STANDARD PLAN RSP ES-8A

2010 REVISED STANDARD PLAN RSP ES-8A

DIST	COUNTY	ROUTE	POST MILES TOTAL PROJECT	SHEET NO.	TOTAL SHEETS
04	Son	1	34.3/34.7	46	57

REGISTERED ELECTRICAL ENGINEER

January 20, 2012
PLANS APPROVAL DATE

REGISTERED PROFESSIONAL ENGINEER
Jeffery G. McRae
No. E14512
Exp. 6-30-12
ELECTRICAL
STATE OF CALIFORNIA

THE STATE OF CALIFORNIA OR ITS OFFICERS OR AGENTS SHALL NOT BE RESPONSIBLE FOR THE ACCURACY OR COMPLETENESS OF SCANNED COPIES OF THIS PLAN SHEET.

TO ACCOMPANY PLANS DATED 7-1-13

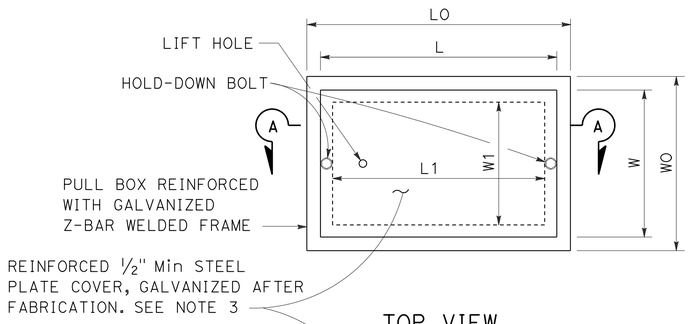

TOP VIEW

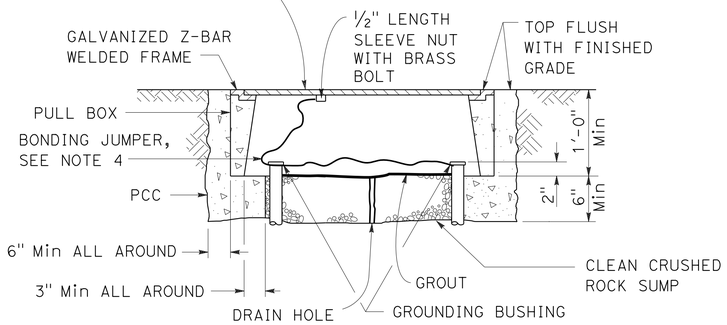

SECTION A-A

No. 3½(T), No. 5(T) AND No. 6(T) TRAFFIC PULL BOX

NOTES ON PULL BOXES:

1. Traffic pull box shall be provided with steel cover and special concrete footing. Steel cover shall have embossed non-skid pattern.
2. Steel reinforcing shall be as regularly used in the standard products of the respective manufacturer.
3. Pull box covers must be marked as follows: "SERVICE" Service circuits between service point and service disconnect; "SPRINKLER-CONTROL" Sprinkler control circuits, 50 V or less; "CALTRANS" On all pull boxes, except pull boxes marked "SPRINKLER-CONTROL"; and "TELEPHONE" Telephone service.
   A) No. 3½(T) pull box.
      1) "SIGNAL" - Traffic signal circuits with or without street or sign lighting circuits.
      2) "ST LIGHTING" - Street or sign lighting circuits where voltage is under 600 V.
   B) No. 5(T) or 6(T) pull box.
      1) "TRAFFIC SIGNAL" - Traffic signal circuits with or without street or sign lighting circuits.
      2) "STREET LIGHTING" - Street or sign lighting circuits where voltage is under 600 V.
      3) "STREET LIGHTING-HIGH VOLTAGE" - Street or sign lighting circuits where voltage is above 600 V.
      4) "IRRIGATION" - Circuits to irrigation controller 120 V or more.
      5) "RAMP METER" - Ramp meter circuits.
      6) "COUNT STATION" - Count or speed monitor circuits.
      7) "COMMUNICATION" - Communication circuits.
      8) "TOS COMMUNICATIONS" - TOS communications line.
      9) "TOS POWER" - TOS power.
      10) "TDC POWER" - Telephone demarcation cabinet power.
      11) "CCTV" - Closed circuit television circuits.
      12) "TMS" - Traffic monitoring station circuits.
      13) "CMS" - Changeable message sign circuits.
      14) "HAR" - Highway advisory radio circuits.
4. Bonding jumper for metal covers shall be 3' long, minimum.
5. The nominal dimensions of the opening in which the cover sets must be the same as the cover dimensions except the length and width dimensions shall be ⅛" greater.
6. Covers and boxes must be interchangeable with California standard male and female gages. When interchanged with a standard male or female gage, the top surfaces must be flush within ⅛".

DIMENSION TABLE

PULL BOX	BOX						COVER				
	MINIMUM * THICKNESS	MINIMUM DEPTH BOX AND EXTENSION	WO	LO	L1	W1	L **	W **	R	EDGE THICKNESS	EDGE TAPER
No. 3½(T)	1½"	1'-0"	1'-5"± 1"	1'-8⅞"±	1'-2½"±	10⅝"± 1"	1'-8"±	1'-1¾"±	0"	½"	NONE
No. 5(T)	1¾"	1'-0"	1'-11½"± 1"	2'-5½"±	1'-7"±	1'-1"± 1"	2'-3"±	1'-4"±	0"	½"	NONE
No. 6(T)	2"	1'-0"	2'-6"± 1"	2'-11½"±	1'-11½"±	1'-5"± 1"	2'-9"±	1'-8"±	0"	½"	NONE

* EXCLUDING CONDUIT WEB ** TOP DIMENSION

STATE OF CALIFORNIA
DEPARTMENT OF TRANSPORTATION

ELECTRICAL SYSTEMS (TRAFFIC RATED PULL BOX)

NO SCALE

RSP ES-8B DATED JANUARY 20, 2012 SUPPLEMENTS THE STANDARD PLANS BOOK DATED 2010.

REVISED STANDARD PLAN RSP ES-8B

2010 REVISED STANDARD PLAN RSP ES-8B

Dist	COUNTY	ROUTE	POST MILES TOTAL PROJECT	SHEET No.	TOTAL SHEETS
04	Son	1	34.3/34.7	47	57

REGISTERED ELECTRICAL ENGINEER

July 20, 2012
PLANS APPROVAL DATE

REGISTERED PROFESSIONAL ENGINEER
Jeffery G. McRae
No. E14512
Exp. 6-30-14
ELECTRICAL
STATE OF CALIFORNIA

THE STATE OF CALIFORNIA OR ITS OFFICERS OR AGENTS SHALL NOT BE RESPONSIBLE FOR THE ACCURACY OR COMPLETENESS OF SCANNED COPIES OF THIS PLAN SHEET.

TO ACCOMPANY PLANS DATED 7-1-13

ISOFOOTCANDLE CURVE - MINIMUM

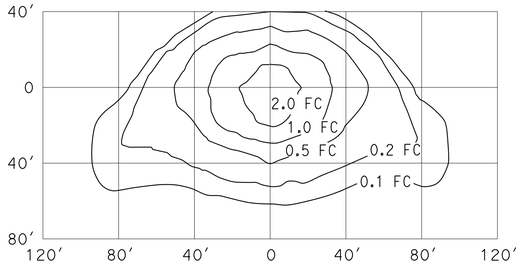

TYPE III MEDIUM CUTOFF

Cutoff Luminaire
34′ Mounting Height
Lamp operated at 22,000 lm
200-W high pressure sodium lamp
ANSI Designation S66

ISOFOOTCANDLE CURVE - MINIMUM

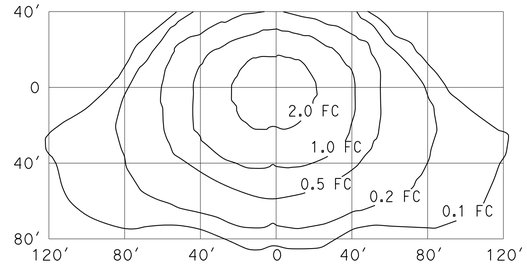

TYPE III MEDIUM CUTOFF

Cutoff Luminaire
40′ Mounting Height
Lamp operated at 37,000 lm
310-W high pressure sodium lamp
ANSI Designation S67

ISOFOOTCANDLE CURVE - MINIMUM

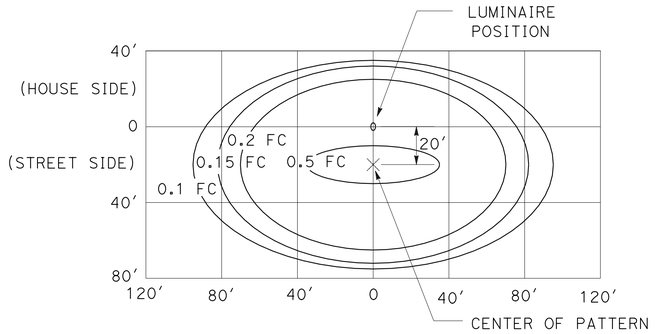

LED LUMINAIRE ROADWAY 1

200-W HPS Equivalent at 34′ Mounting Height

ISOFOOTCANDLE CURVE - MINIMUM

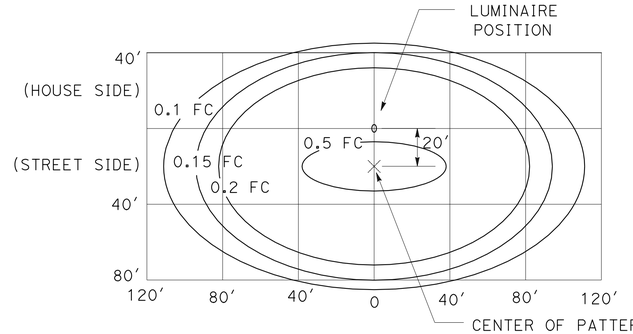

LED LUMINAIRE ROADWAY 2

310-W HPS Equivalent at 40′ Mounting Height

ISOFOOTCANDLE CURVE - MINIMUM

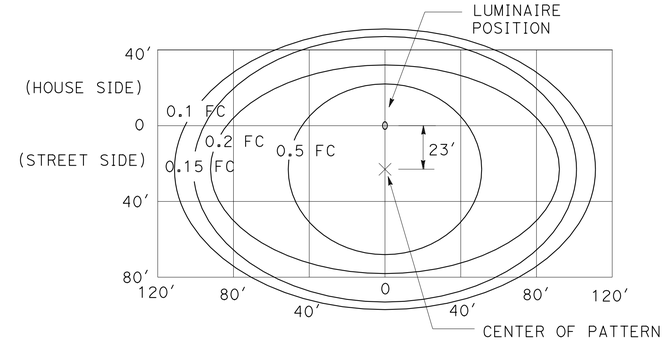

LED LUMINAIRE ROADWAY 4

400-W HPS Equivalent at 40′ Mounting Height

ISOFOOTCANDLE CURVE - MINIMUM

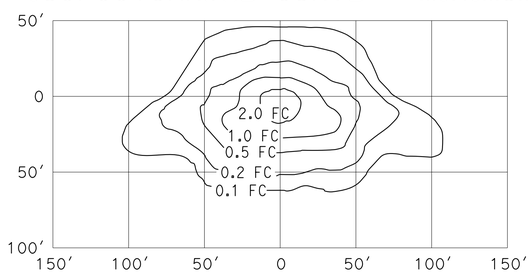

TYPE III MEDIUM CUTOFF

Cutoff Luminaire
30′ Mounting Height
Lamp operated at 16,000 lm
150-W high pressure sodium lamp
ANSI Designation S55

ISOFOOTCANDLE CURVE - MINIMUM

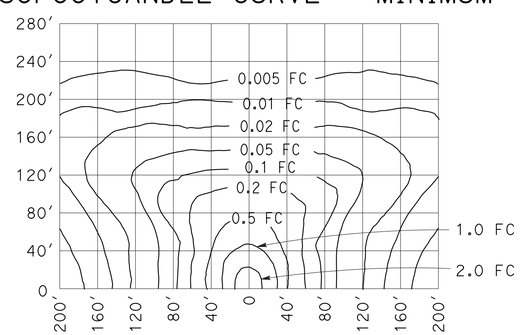

LOW PRESSURE SODIUM LUMINAIRE

40′ Mounting Height
Lamp operated at 33,000 lm
180-W low pressure sodium lamp

STATE OF CALIFORNIA
DEPARTMENT OF TRANSPORTATION

ELECTRICAL SYSTEMS (ISOFOOTCANDLE DIAGRAMS)

NO SCALE

RSP ES-10A DATED JULY 20, 2012 SUPPLEMENTS THE STANDARD PLANS BOOK DATED 2010.

REVISED STANDARD PLAN RSP ES-10A

2010 REVISED STANDARD PLAN RSP ES-10A

2-16-12

DIST	COUNTY	ROUTE	POST MILES TOTAL PROJECT	SHEET No.	TOTAL SHEETS
04	Son	1	34.3/34.7	48	57

REGISTERED CIVIL ENGINEER 10-23-12 DATE

7-1-13
PLANS APPROVAL DATE

REGISTERED PROFESSIONAL ENGINEER Philip E. Lutz No. C55839 Exp. 12-31-12 CIVIL STATE OF CALIFORNIA

The State of California or its officers or agents shall not be responsible for the accuracy or completeness of electronic copies of this plan sheet.

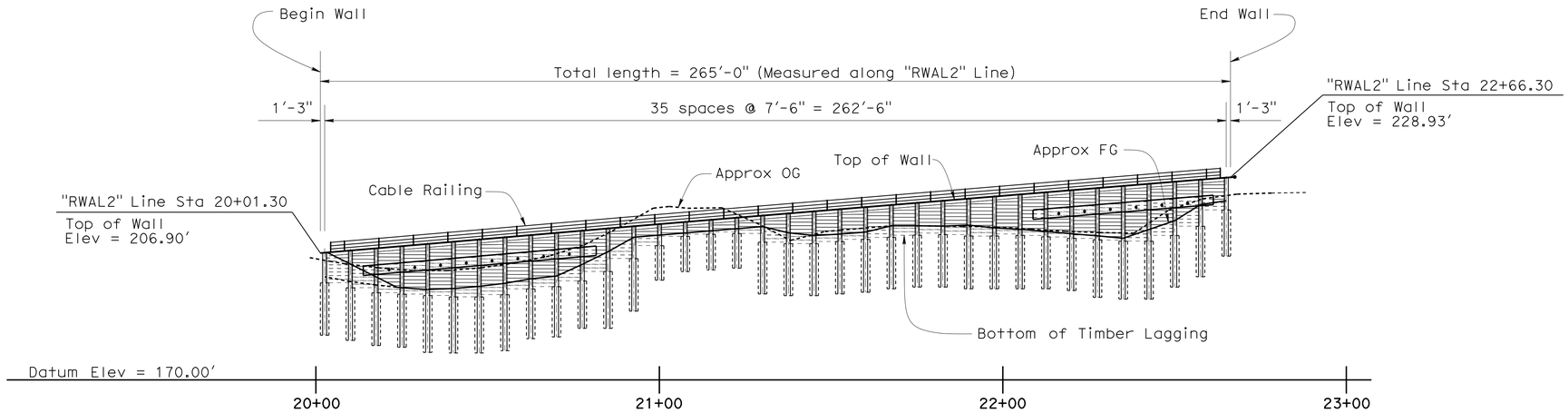

DEVELOPED ELEVATION

1" = 20'

QUANTITIES

STRUCTURE EXCAVATION (SOLDIER PILE WALL)	214	CY
STRUCTURE BACKFILL (SOLDIER PILE WALL)	217	CY
CONCRETE BACKFILL (SOLDIER PILE WALL)	97	CY
GROUND ANCHOR (SUBHORIZONTAL)	14	EA
SOLDIER PILE	977	LF
30" DRILLED HOLE	568	LF
STRUCTURAL CONCRETE, RETAINING WALL	26	CY
BAR REINFORCING STEEL (RETAINING WALL)	5,860	LB
TIMBER LAGGING	18	MFBM
CLEAN AND PAINT STEEL SOLDIER PILING	LUMP	SUM
PREPARE AND STAIN CONCRETE	888	SQFT
CABLE RAILING	258	LF

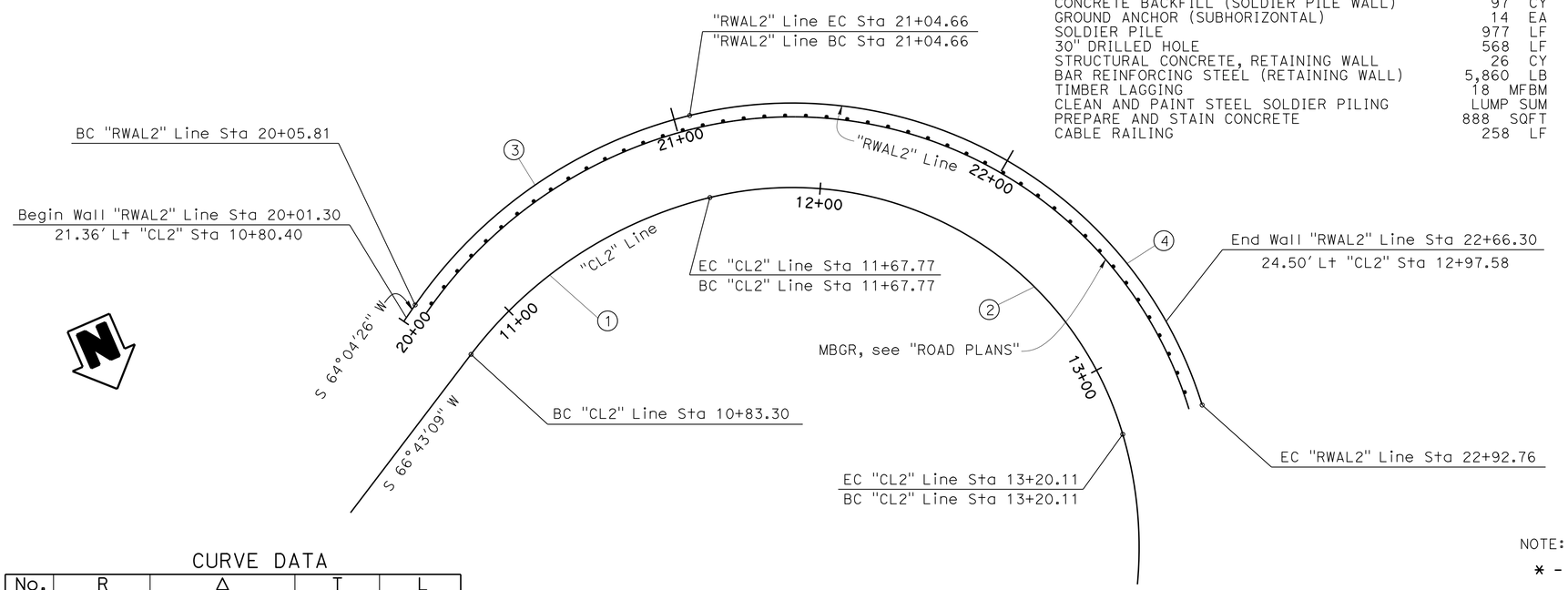

PLAN

1" = 20'

CURVE DATA

No.	R	Δ	T	L
1	124.48'	38°52'42"	43.93'	84.47'
2	99.90'	87°22'18"	95.42'	152.34'
3	136.40'	41°31'24"	51.71'	98.85'
4	124.40'	86°37'58"	117.30'	188.10'

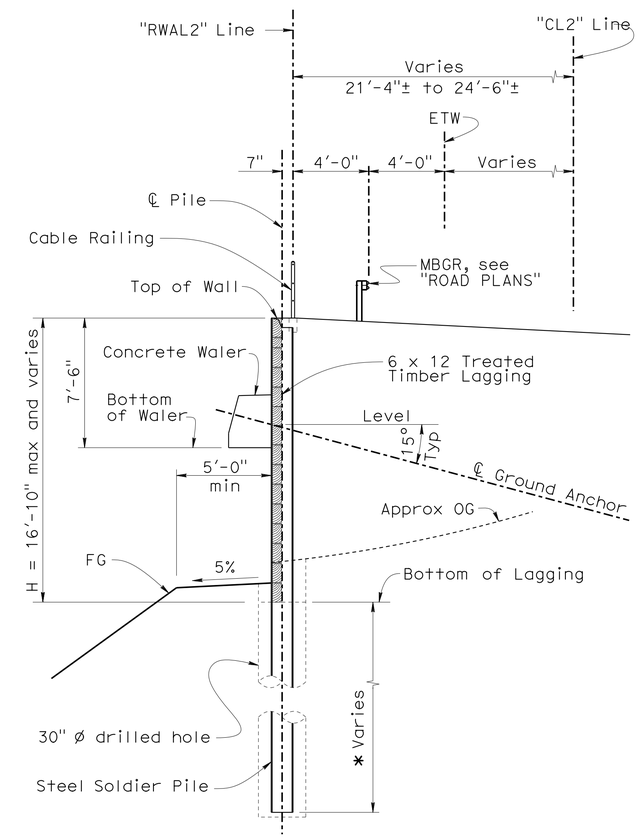

TYPICAL SECTION

¼" = 1'-0"

NOTE:

* - See Pile/Ground Anchor Data Table on "INDEX TO PLANS" sheet

X DESIGN ENGINEER	DESIGN	BY P. Lutz	CHECKED P. Norboe	LOAD & RESISTANCE FACTOR DESIGN	LIVE LOADING: HL93 W/"LOW-BOY"; PERMIT DESIGN VEHICLE
	DETAILS	BY D. Elliott	CHECKED P. Norboe	LAYOUT BY P. Lutz	CHECKED P. Norboe
	QUANTITIES	BY P. Norboe	CHECKED P. Lutz	SPECIFICATIONS BY T. Geerts	PLANS AND SPECS COMPARED P. Lutz

ORIGINAL SCALE IN INCHES FOR REDUCED PLANS 0 1 2 3

STATE OF CALIFORNIA DEPARTMENT OF TRANSPORTATION

DIVISION OF ENGINEERING SERVICES STRUCTURE DESIGN DESIGN BRANCH 9

BRIDGE NO. 20E0064 POST MILE 34.5

FORT ROSS RETAINING WALL
GENERAL PLAN

UNIT: 3594
PROJECT NUMBER & PHASE: 04140000741 CONTRACT NO.: 04-4S6201

DISREGARD PRINTS BEARING EARLIER REVISION DATES

REVISION DATES 3-4-11 5-5-11 1-3-12 2-7-12 SHEET 1 OF 10

STRUCTURES DESIGN GENERAL PLAN SHEET (ENGLISH) (REV.09-01-10)

FILE => 20e0064-a-gp-01.dgn

USERNAME => s126614 DATE PLOTTED => 14-JAN-2014 TIME PLOTTED => 05:48

DIST	COUNTY	ROUTE	POST MILES TOTAL PROJECT	SHEET No.	TOTAL SHEETS
04	Son	1	34.3/34.7	49	57

REGISTERED CIVIL ENGINEER — DATE 10-23-12

7-1-13
PLANS APPROVAL DATE

REGISTERED PROFESSIONAL ENGINEER — Philip E. Lutz — No. C55839 — Exp. 12-31-12 — CIVIL — STATE OF CALIFORNIA

The State of California or its officers or agents shall not be responsible for the accuracy or completeness of electronic copies of this plan sheet.

PILE/GROUND ANCHOR DATA TABLE

Station	Pile No.	Top of Pile Elev.	Bottom of Pile Tip Elevation	Bottom of Lagging Elevation	Pile Section	Ground Anchors T	Ground Anchors Unbonded Length
		(Ft)	(Ft)	(Ft)		(Kips)	(Ft)
20+02.55	1	207.00	183.00	----	HP14x89	----	----
20+10.05	2	207.63	181.50	198.27	HP14x102		
20+17.55	3	208.26	180.00	196.81	HP14x117		
20+25.05	4	208.90	179.50	195.36	HP14x117	35.25	40.0
20+32.55	5	209.54	178.00	194.96	HP14x117	35.25	40.0
20+40.05	6	210.17	177.50	194.57	HP14x117	35.25	40.0
20+47.55	7	210.83	177.50	194.17	HP14x117	35.25	40.0
20+55.05	8	211.47	178.50	194.81	HP14x117	35.25	40.0
20+62.55	9	212.12	182.00	196.50	HP14x117	35.25	40.0
20+70.05	10	212.76	182.50	197.14	HP14x117	35.25	40.0
20+77.55	11	213.40	176.50	198.83	HP14x117	35.25	40.0
20+85.05	12	214.05	181.50	201.56	HP14x117		
20+92.55	13	214.69	190.00	205.32	HP14x102		
21+00.05	14	215.31	199.00	209.07	HP14x73		
21+07.55	15	215.94	201.50	211.78	HP14x73		
21+15.05	16	216.56	202.00	212.40	HP14x73		
21+22.55	17	217.18	202.50	213.02	HP14x73		
21+30.05	18	217.80	195.00	212.60	HP14x89		
21+37.55	19	218.41	194.50	210.09	HP14x102		
21+45.05	20	219.03	194.50	209.67	HP14x102		
21+52.55	21	219.64	195.00	210.28	HP14x102		
21+60.05	22	220.26	195.50	210.89	HP14x102		
21+67.55	23	220.88	196.50	211.51	HP14x102		
21+75.05	24	221.49	197.00	212.13	HP14x102		
21+82.55	25	222.11	197.00	212.74	HP14x102		
21+90.05	26	222.72	196.50	212.32	HP14x102		
21+97.55	27	223.34	193.50	211.89	HP14x117		
22+05.05	28	223.95	193.50	212.50	HP14x117		
22+12.55	29	224.57	191.50	212.08	HP14x117		
22+20.05	30	225.18	196.00	211.65	HP14x117	35.25	40.0
22+27.55	31	225.80	194.00	211.22	HP14x117	48.75	40.0
22+35.05	32	226.42	193.50	210.80	HP14x117	57.50	40.0
22+42.55	33	227.03	193.50	210.37	HP14x117	57.50	40.0
22+50.05	34	227.64	197.00	212.03	HP14x117	57.50	40.0
22+57.55	35	228.25	200.00	214.72	HP14x117	48.75	40.0
22+65.05	36	228.83	206.00	219.47	HP14x102		
				----		----	----

NOTE: Pile sections are minimum.

GENERAL NOTES
WORKING STRESS DESIGN

DESIGN:

AASHTO LRFD Bridge Design Specifications - 4th Edition/2007 with California Amendments

LIVE LOAD:

2 ft level Surcharge, to a depth of 10′

SOIL PARAMETERS:

(For determination of design lateral earth pressures)

Active Earth Pressure

$\phi = 10°$
$\gamma_m = 120$ pcf

$c = 250$

Passive Earth Pressure

$\phi = 40°$
$\gamma_{sub} = 130$ pcf
$c = 500$ psf
$\delta = 26.7°$ (Friction Factor)

STRUCTURAL STEEL:

Fy = 50 ksi
fs = 27.5 ksi

STRUCTURAL TIMBER:

Treated Douglas Fir No. 1 or better
Timber to be full sawn pressure treated

PRESTRESSING STEEL (Ground Anchors):

Bars - ASTM Designation A722 Type II (150 ksi)
Strands Tendons - ASTM Designation: A416 (270 ksi Low Relaxation Steel)
FTL = Factored Test Load per anchor (Kips)
fpu = Minimum tensile strength of prestressing steel
As = Minimum cross sectional area of prestressing steel in ground anchors (Square Inch)

$$As\ (Min) = \frac{1.0\ FTL}{0.75\ fpu}\ (Strands)$$

$$As\ (Min) = \frac{1.5\ T}{0.75\ fpu}\ (Bars)$$

SEISMIC LOADING:

MCE loading by San Andreas Fault
PGA = 0.70 g (g: Gravitational Acceleration)
K_H = 40 H Seismic Fluid Pressure (Uniform); PSF

STANDARD PLANS DATED MAY 2006

A10A	Acronyms and Abbrevations (Sheet 1 of 2)
A10B	Acronyms and Abbrevations (Sheet 2 of 2)
B3-9	Retaining Wall Details No. 2
B11-47	Cable Railing

STANDARD PLAN SHEET NO.
DETAIL NO.

INDEX TO PLANS

1. GENERAL PLAN
2. INDEX TO PLANS
3. STRUCTURE PLAN
4. FOUNDATION PLAN
5. TYPICAL SECTION
6. WALL DETAILS
7. EXCAVATION AND BACKFILL DETAILS
8. SUB HORIZONTAL GROUND ANCHOR DETAILS
9. LOG OF TEST BORINGS No. 1 OF 2
10. LOG OF TEST BORINGS No. 2 OF 2

	BY	CHECKED
DESIGN	P. Lutz	P. Norboe
DETAILS	D. Elliott	P. Norboe
QUANTITIES	P. Norboe	P. Lutz

STATE OF CALIFORNIA
DEPARTMENT OF TRANSPORTATION

DIVISION OF ENGINEERING SERVICES
STRUCTURE DESIGN
DESIGN BRANCH 9

BRIDGE NO. 20E0064
POST MILE 34.5

FORT ROSS RETAINING WALL
INDEX TO PLANS

STRUCTURES DESIGN DETAIL SHEET (ENGLISH) (REV. 09-01-10)

ORIGINAL SCALE IN INCHES FOR REDUCED PLANS 0 1 2 3

UNIT: 3594
PROJECT NUMBER & PHASE: 04140000741
CONTRACT NO.: 04-4S6201

DISREGARD PRINTS BEARING EARLIER REVISION DATES

REVISION DATES: 1-1-11 2-7-12 1-1-11

SHEET 2 OF 10

FILE => 20e0064-a-itp.dgn

USERNAME => s121614 DATE PLOTTED => 14-JAN-2014 TIME PLOTTED => 05:48

DIST	COUNTY	ROUTE	POST MILES TOTAL PROJECT	SHEET No.	TOTAL SHEETS
04	Son	1	34.3/34.7	50	57

REGISTERED CIVIL ENGINEER 10-23-12 DATE

7-1-13
PLANS APPROVAL DATE

REGISTERED PROFESSIONAL ENGINEER
Philip E. Lutz
No. C55839
Exp. 12-31-12
CIVIL
STATE OF CALIFORNIA

The State of California or its officers or agents shall not be responsible for the accuracy or completeness of electronic copies of this plan sheet.

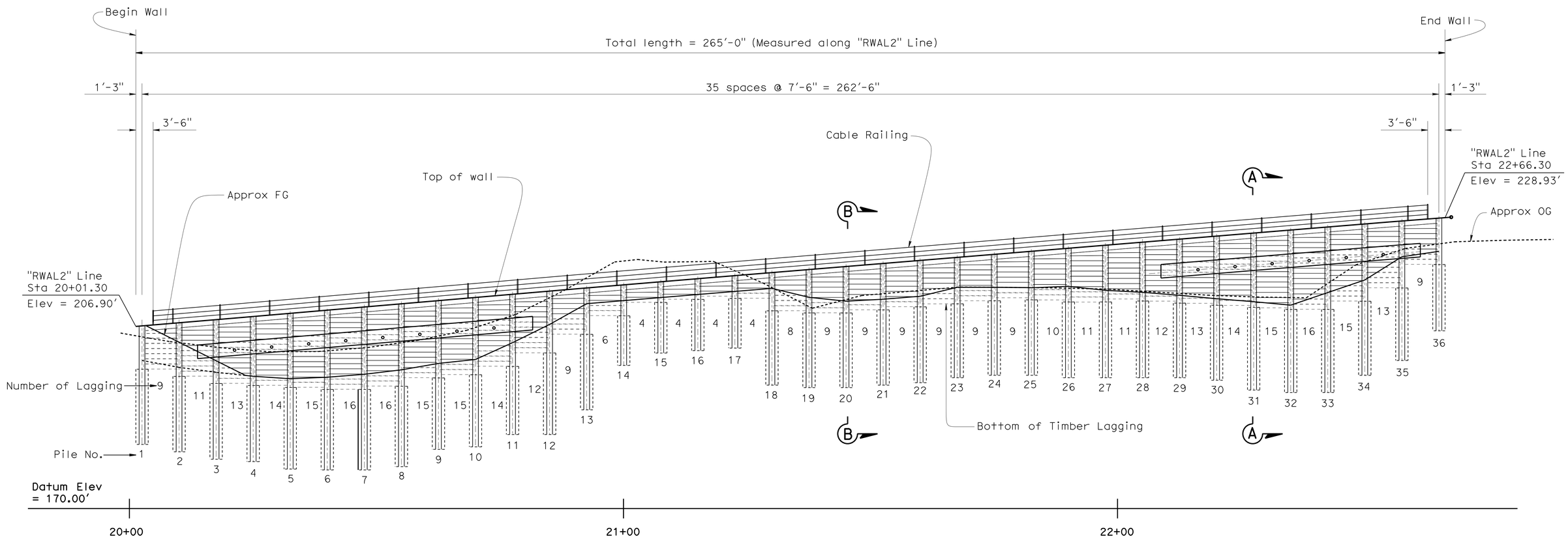

DEVELOPED ELEVATION

1" = 10'

NOTES:

1. For Pile elevations and Ground Anchors data, see "PILE/GROUND ANCHORS DATA TABLE" sheet.
2. For "Section A-A" and "Section B-B", see "TYPICAL SECTION" sheet.

	BY	CHECKED
DESIGN	P. Lutz	P. Norboe
DETAILS	D. Elliott	P. Norboe
QUANTITIES	P. Norboe	P. Lutz

STATE OF CALIFORNIA
DEPARTMENT OF TRANSPORTATION

DIVISION OF ENGINEERING SERVICES
STRUCTURE DESIGN
DESIGN BRANCH 9

BRIDGE NO. 20E0064
POST MILE 34.5

FORT ROSS RETAINING WALL
STRUCTURE PLAN

STRUCTURES DESIGN DETAIL SHEET (ENGLISH) (REV. 09-01-10)

ORIGINAL SCALE IN INCHES FOR REDUCED PLANS 0 1 2 3

UNIT: 3594
PROJECT NUMBER & PHASE: 04140000741
CONTRACT NO.: 04-4S6201

DISREGARD PRINTS BEARING EARLIER REVISION DATES

REVISION DATES 1-7-12 2-7-12 3-1-13

SHEET 3 OF 10

FILE => 20e0064-c-sp.dgn

USERNAME => s121614 DATE PLOTTED => 14-JAN-2014 TIME PLOTTED => 05:48

DIST	COUNTY	ROUTE	POST MILES TOTAL PROJECT	SHEET No.	TOTAL SHEETS
04	Son	1	34.3/34.7	51	57

REGISTERED CIVIL ENGINEER 10-23-12 DATE

7-1-13
PLANS APPROVAL DATE

REGISTERED PROFESSIONAL ENGINEER Philip E. Lutz No. C55839 Exp. 12-31-12 CIVIL STATE OF CALIFORNIA

The State of California or its officers or agents shall not be responsible for the accuracy or completeness of electronic copies of this plan sheet.

CURVE DATA

No.	R	Δ	T	L
A	124.480	38°52'42"	43.93	84.47
B	99.90	87°22'19"	95.42	152.34
C	115.65	48°48'04"	52.46	98.50
D	208.43	35°31'39"	66.77	129.24
E	136.40	41°31'24"	51.71	98.85
F	124.40	86°37'59"	117.30	188.10

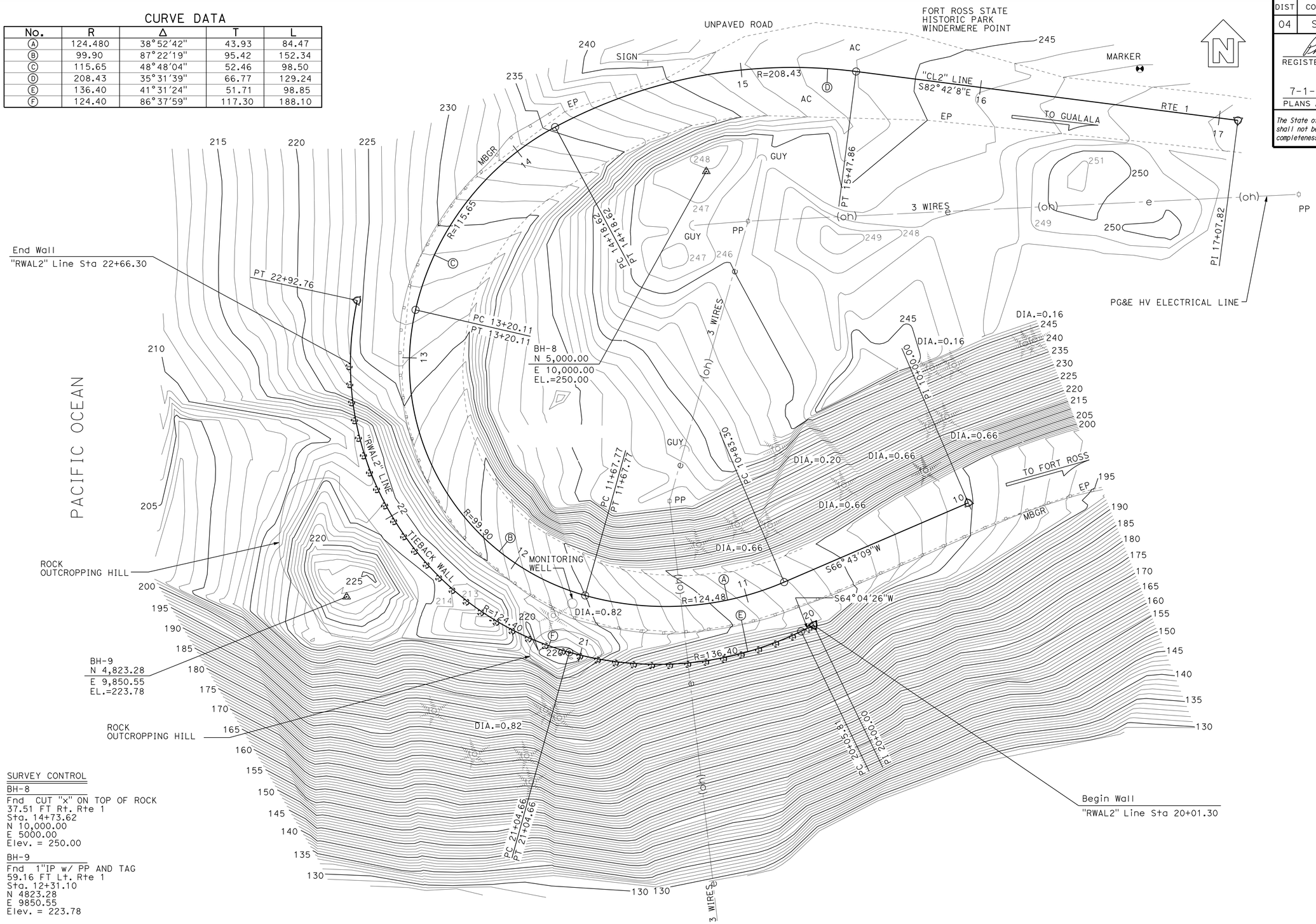

SURVEY CONTROL

BH-8
Fnd CUT "x" ON TOP OF ROCK
37.51 FT Rt. Rte 1
Sta. 14+73.62
N 10,000.00
E 5000.00
Elev. = 250.00

BH-9
Fnd 1"IP w/ PP AND TAG
59.16 FT Lt. Rte 1
Sta. 12+31.10
N 4823.28
E 9850.55
Elev. = 223.78

PRELIMINARY INVESTIGATION SECTION

SCALE 1"=20'	VERT.DATUM Arbitrary	PHOTOGRAMMETRY AS OF: X			
	HORZ.DATUM Arbitrary	SURVEYED	BY District	CHECKED	BY J.Borden 01/2011
ALIGNMENT TIES Dist. Traverse Sheet		DRAFTED	BY T.Zolnikov 01/2011	CHECKED	BY L.Lew 01/2011

DESIGN	BY P. Lutz	CHECKED P. Norboe
DETAILS	BY D. Elliott	CHECKED P. Norboe
QUANTITIES	BY P. Norboe	CHECKED P. Lutz

STATE OF CALIFORNIA
DEPARTMENT OF TRANSPORTATION

DIVISION OF ENGINEERING SERVICES
STRUCTURE DESIGN
DESIGN BRANCH 9

BRIDGE NO. 20E0064
POST MILE 34.5

FORT ROSS RETAINING WALL
FOUNDATION PLAN

STRUCTURES FOUNDATION PLAN SHEET (ENGLISH) (REV. 09-01-10)

ORIGINAL SCALE IN INCHES FOR REDUCED PLANS 0 1 2 3

UNIT: 3646
PROJECT NUMBER & PHASE: 04140000741
CONTRACT NO.: 04-4S6201

DISREGARD PRINTS BEARING EARLIER REVISION DATES

REVISION DATES 1-3-11 1-3-12 1-3-13

SHEET 4 OF 10

FILE => 20e0064-e-fpl.dgn

DIST	COUNTY	ROUTE	POST MILES TOTAL PROJECT	SHEET No.	TOTAL SHEETS
04	Son	1	34.3/34.7	52	57

REGISTERED CIVIL ENGINEER 10-23-12 DATE

7-1-13
PLANS APPROVAL DATE

REGISTERED PROFESSIONAL ENGINEER Philip E. Lutz No. C55839 Exp. 12-31-12 CIVIL STATE OF CALIFORNIA

The State of California or its officers or agents shall not be responsible for the accuracy or completeness of electronic copies of this plan sheet.

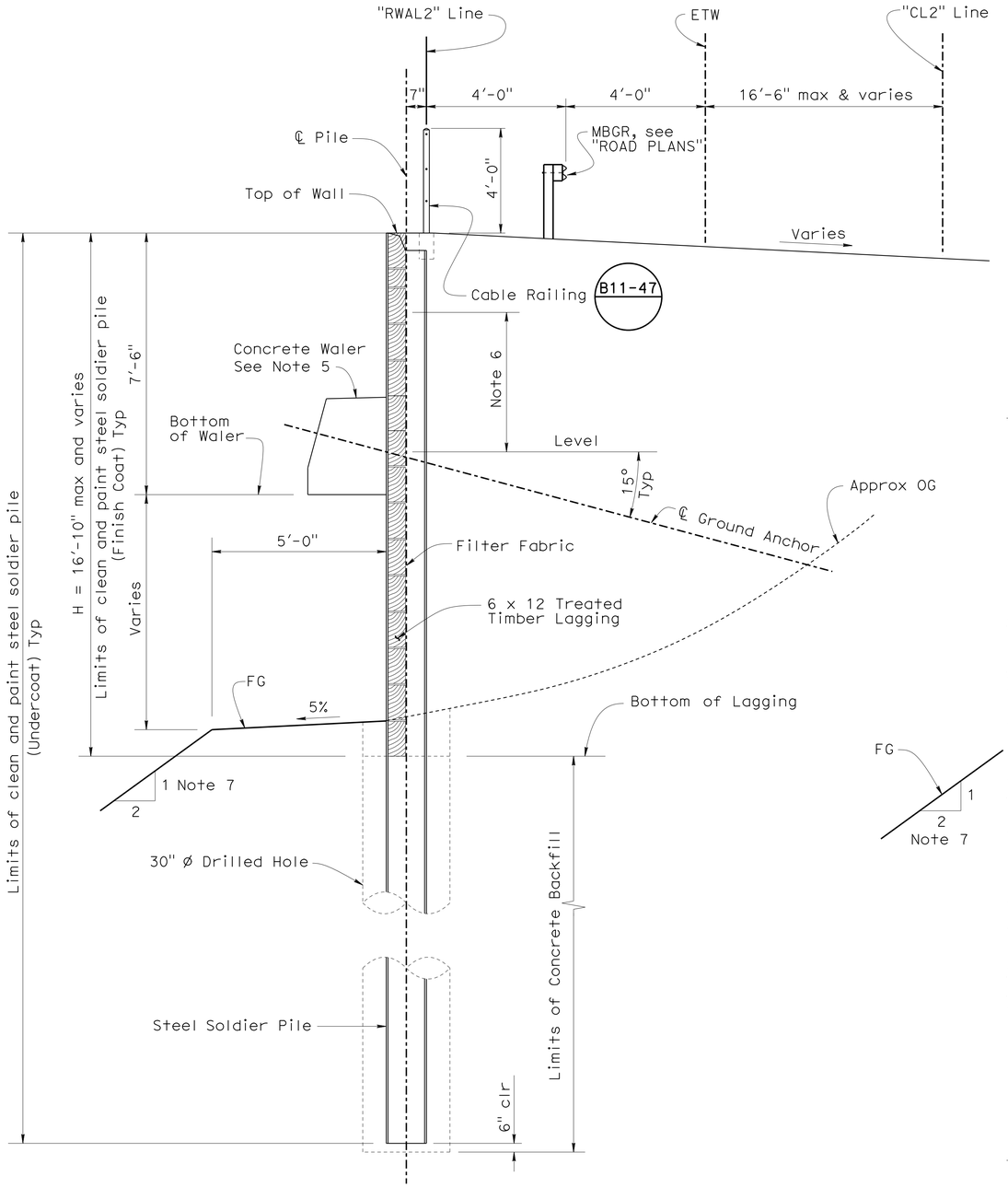

SECTION A-A

½" = 1'-0"

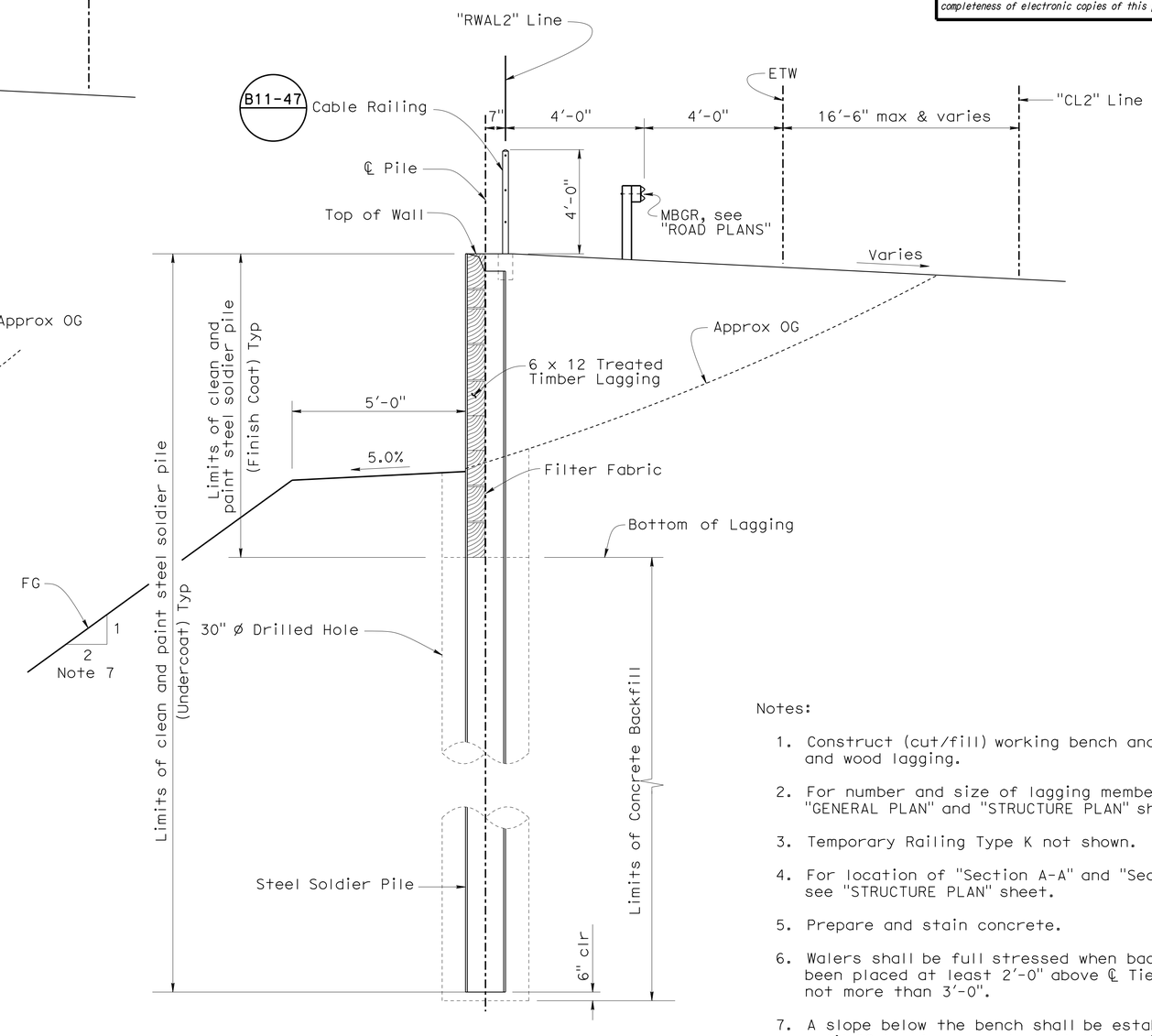

SECTION B-B

½" = 1'-0"

Notes:

1. Construct (cut/fill) working bench and install piles and wood lagging.
2. For number and size of lagging members, see "GENERAL PLAN" and "STRUCTURE PLAN" sheets.
3. Temporary Railing Type K not shown.
4. For location of "Section A-A" and "Section B-B", see "STRUCTURE PLAN" sheet.
5. Prepare and stain concrete.
6. Walers shall be full stressed when backfill has been placed at least 2'-0" above ℄ Tieback, but not more than 3'-0".
7. A slope below the bench shall be established until OG has been reached. At the begin of wall, OG will begin at the bench angle point.

	BY	CHECKED
DESIGN	P. Lutz	P. Norboe
DETAILS	D. Elliott	P. Norboe
QUANTITIES	P. Norboe	P. Lutz

STATE OF CALIFORNIA
DEPARTMENT OF TRANSPORTATION

DIVISION OF ENGINEERING SERVICES
STRUCTURE DESIGN
DESIGN BRANCH 9

BRIDGE NO. 20E0064
POST MILE 34.5

FORT ROSS RETAINING WALL
TYPICAL SECTION

STRUCTURES DESIGN DETAIL SHEET (ENGLISH) (REV. 09-01-10)

ORIGINAL SCALE IN INCHES FOR REDUCED PLANS 0 1 2 3

UNIT: 3594
PROJECT NUMBER & PHASE: 04140000741
CONTRACT NO.: 04-4S6201

DISREGARD PRINTS BEARING EARLIER REVISION DATES

REVISION DATES: 3-18-11 2-7-12 3-1-13

SHEET 5 OF 10

FILE => 20e0064-k-ts01.dgn

USERNAME => DATE PLOTTED => 8/21/14 14-JAN-2014 TIME PLOTTED => 05:48

DIST	COUNTY	ROUTE	POST MILES TOTAL PROJECT	SHEET No.	TOTAL SHEETS
04	Son	1	34.3/34.7	53	57

REGISTERED CIVIL ENGINEER 10-23-12 DATE

7-1-13
PLANS APPROVAL DATE

REGISTERED PROFESSIONAL ENGINEER Philip E. Lutz No. C55839 Exp. 12-31-12 CIVIL STATE OF CALIFORNIA

The State of California or its officers or agents shall not be responsible for the accuracy or completeness of electronic copies of this plan sheet.

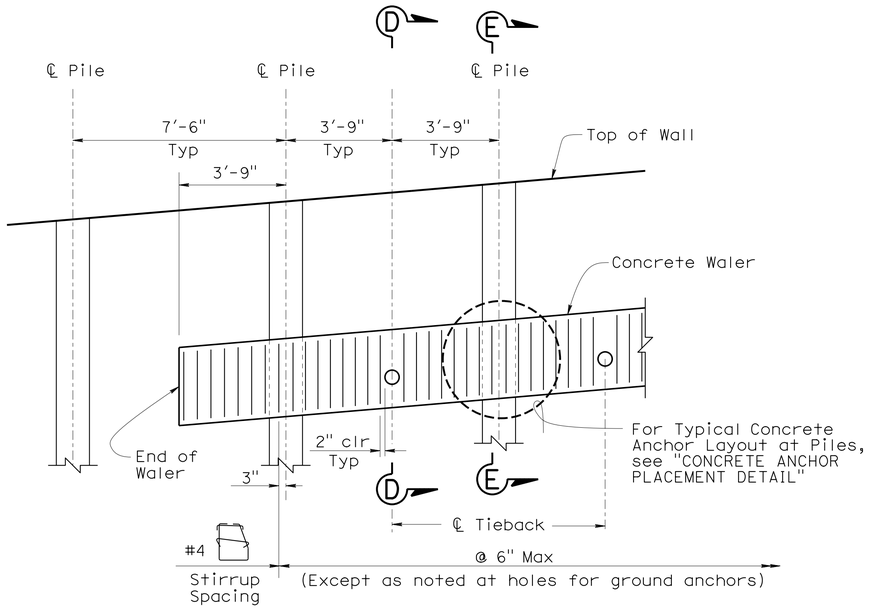

WALER PART ELEVATION

3/8" = 1'-0"

Note: Timber lagging not shown.

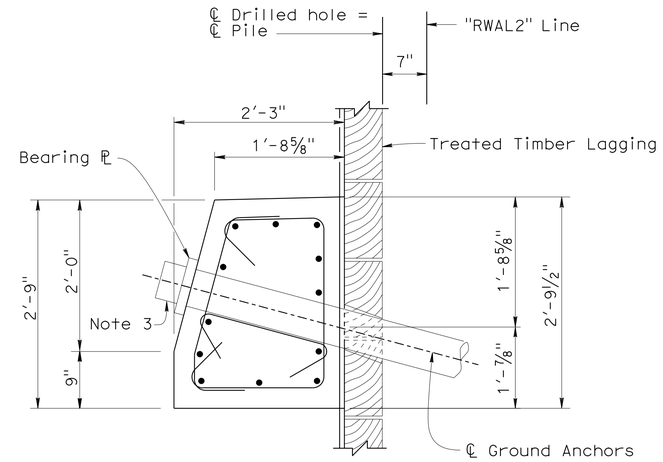

SECTION D-D

1" = 1'-0"

Notes:

1. For reinf, see "SECTION E-E".
2. All Anchor Studs are to be welded to HP-Section with full penetration weld.
3. Apply finish coat to all anchorage enclosures.

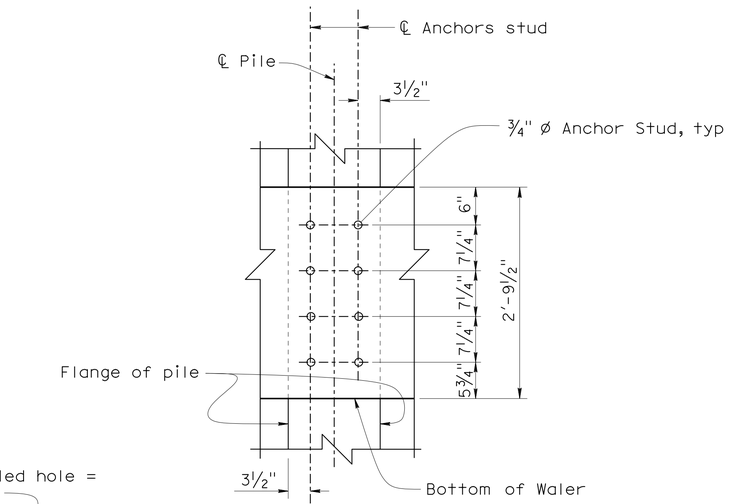

CONCRETE ANCHOR PLACEMENT DETAIL

1" = 1'-0"

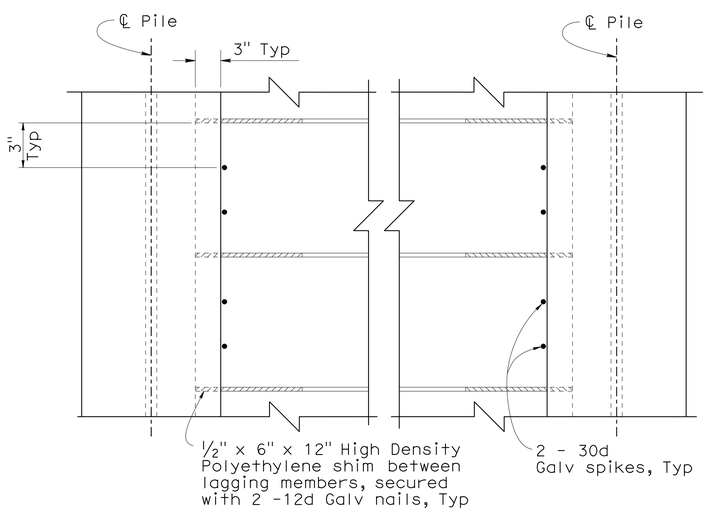

LAGGING PART ELEVATION

NO SCALE

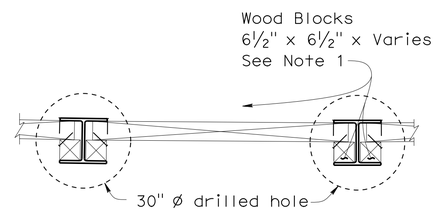

PART PLAN OF LAGGING MEMBER

1/2" = 1'-0"

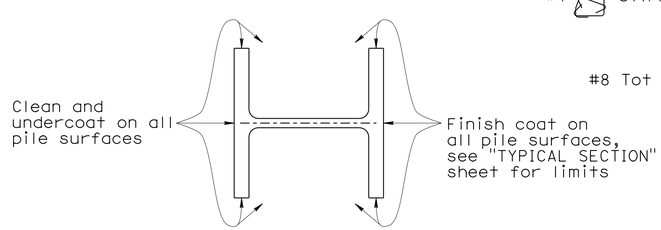

LIMITS OF CLEAN & PAINT STEEL SOLDIER PILE

1 1/2" = 1'

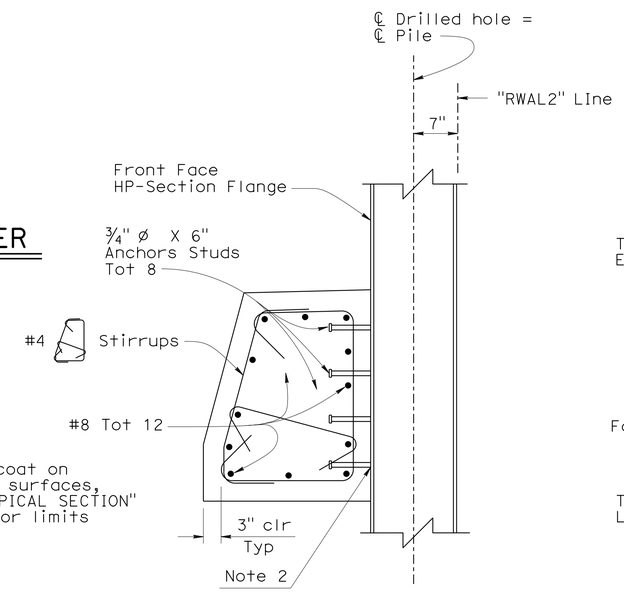

SECTION E-E

1" = 1'-0"

Note: For dimensions not shown, see "SECTION D-D"

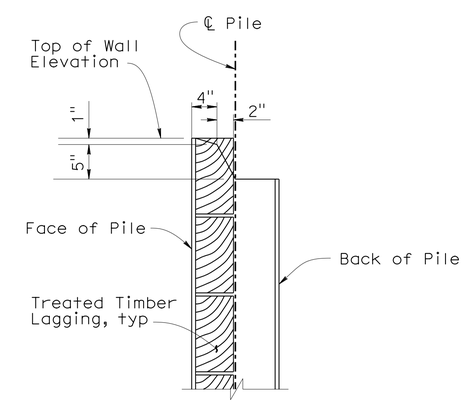

TOP OF PILE DETAIL

1" = 1'-0"

	BY	CHECKED
DESIGN	P. Lutz	P. Norboe
DETAILS	D. Elliott	P. Norboe
QUANTITIES	P. Norboe	P. Lutz

STATE OF CALIFORNIA
DEPARTMENT OF TRANSPORTATION

DIVISION OF ENGINEERING SERVICES
STRUCTURE DESIGN
DESIGN BRANCH 9

BRIDGE NO. 20E0064
POST MILE 34.5

FORT ROSS RETAINING WALL
WALL DETAILS

STRUCTURES DESIGN DETAIL SHEET (ENGLISH) (REV. 09-01-10)

ORIGINAL SCALE IN INCHES FOR REDUCED PLANS 0 1 2 3

UNIT: 3594
PROJECT NUMBER & PHASE: 04140000741
CONTRACT NO.: 04-4S6201

DISREGARD PRINTS BEARING EARLIER REVISION DATES

REVISION DATES 3-16-11 1-3-12 2-7-12

SHEET 6 OF 10

FILE => 20e0064-u-wall_det01.dgn

USERNAME => s121614 DATE PLOTTED => 14-JAN-2012 TIME PLOTTED => 05:49

DIST	COUNTY	ROUTE	POST MILES TOTAL PROJECT	SHEET No.	TOTAL SHEETS
04	Son	1	34.3/34.7	54	57

REGISTERED CIVIL ENGINEER 10-23-12 DATE

7-1-13
PLANS APPROVAL DATE

REGISTERED PROFESSIONAL ENGINEER
Philip E. Lutz
No. C55839
Exp. 12-31-12
CIVIL
STATE OF CALIFORNIA

The State of California or its officers or agents shall not be responsible for the accuracy or completeness of electronic copies of this plan sheet.

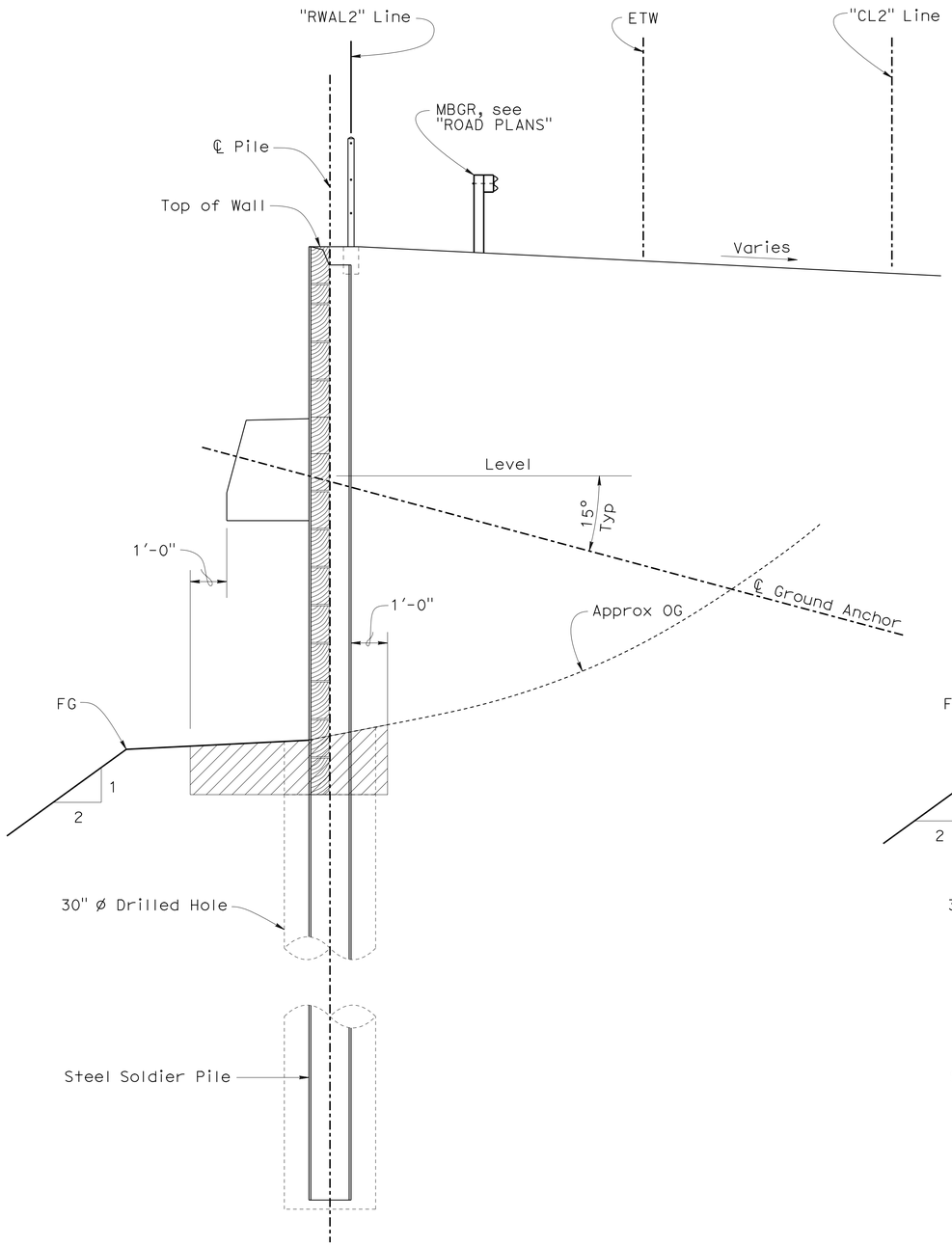

EXCAVATION

½" = 1'-0"

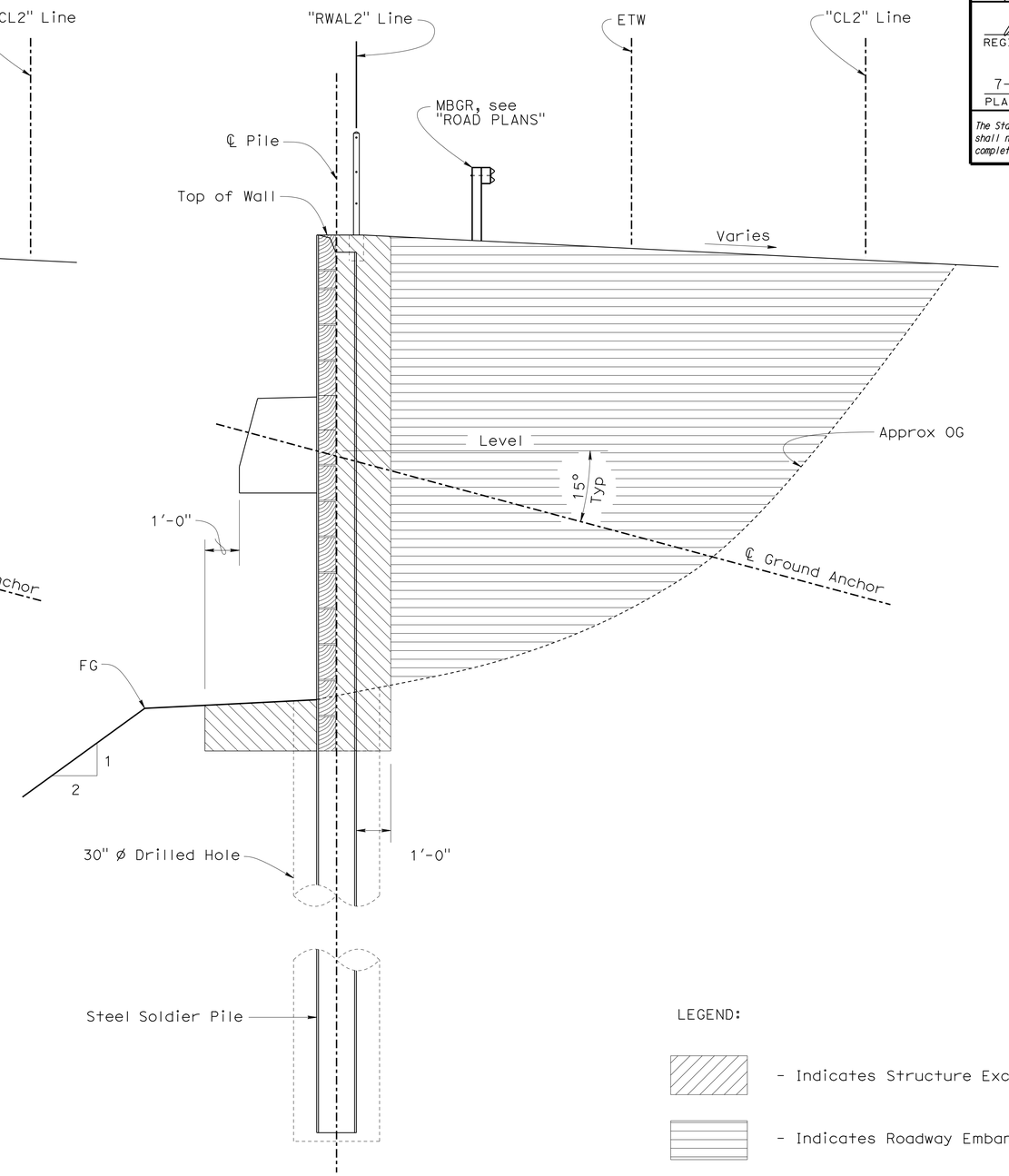

BACKFILL

½" = 1'-0"

LEGEND:

- Indicates Structure Excavation (Solider Pile Wall)
- Indicates Roadway Embankment (See "ROAD PLANS")
- Indicates Structure Backfill (Solider Pile Wall)

	BY	CHECKED
DESIGN	P. Lutz	P. Norboe
DETAILS	D. Elliott	P. Norboe
QUANTITIES	P. Norboe	P. Lutz

STATE OF CALIFORNIA
DEPARTMENT OF TRANSPORTATION

DIVISION OF ENGINEERING SERVICES
STRUCTURE DESIGN
DESIGN BRANCH 9

BRIDGE NO. 20E0064
POST MILE 34.5

FORT ROSS RETAINING WALL
EXCAVATION AND BACKFILL DETAILS

STRUCTURES DESIGN DETAIL SHEET (ENGLISH) (REV. 09-01-10)

ORIGINAL SCALE IN INCHES FOR REDUCED PLANS 0 1 2 3

UNIT: 3594
PROJECT NUMBER & PHASE: 04140000741
CONTRACT NO.: 04-4S6201

DISREGARD PRINTS BEARING EARLIER REVISION DATES

REVISION DATES: 2-11-11 3-1-11 2-7-12

SHEET 7 OF 10

FILE => 20e0064-u-wall_ex_bkfill_det.dgn

USERNAME => s121614 DATE PLOTTED => 14-JAN-2014 TIME PLOTTED => 05:49

DIST	COUNTY	ROUTE	POST MILES TOTAL PROJECT	SHEET No.	TOTAL SHEETS
04	Son	1	34.3/34.7	55	57

REGISTERED CIVIL ENGINEER 10-23-12 DATE

7-1-13
PLANS APPROVAL DATE

The State of California or its officers or agents shall not be responsible for the accuracy or completeness of electronic copies of this plan sheet.

REGISTERED PROFESSIONAL ENGINEER Phillip E. Lutz No. C55839 Exp. 12-31-12 CIVIL STATE OF CALIFORNIA

NOTES:

(A) Level of initial grouting for drilled hole 6" in diameter or smaller

(B) Level of secondary grouting

(C) Level of initial grouting inside corrugated sheathing

(D) Bonded length shall be determined by the contractor

(1) (E) ~~For unbonded length, see PROJECT PLANS~~

(2) (F) ~~For inclination, see PROJECT PLANS~~

(G) Face of Wall Excavation

(4)

NOTES:

1. Anchorage enclosure shall only be used when anchor head assembly is not enclosed in concrete.
2. Anchorage enclosure shall have provisions to allow injecting grout at low end and venting at high end. Galvanize after fabrication.
3. Silicone sealant to cover full width of flange.
4. Steel tube (Min thickness = 1/4") welded to bearing plate. Galvanize assembly after fabrication
5. Steel tube welded to bearing plate. Inside diameter of steel tube (Min thickness = 1/4") to be 1" greater than outside diameter of smooth sheathing.
6. Galvanize assembly after fabrication.
7. For other wall details, see PROJECT PLANS.

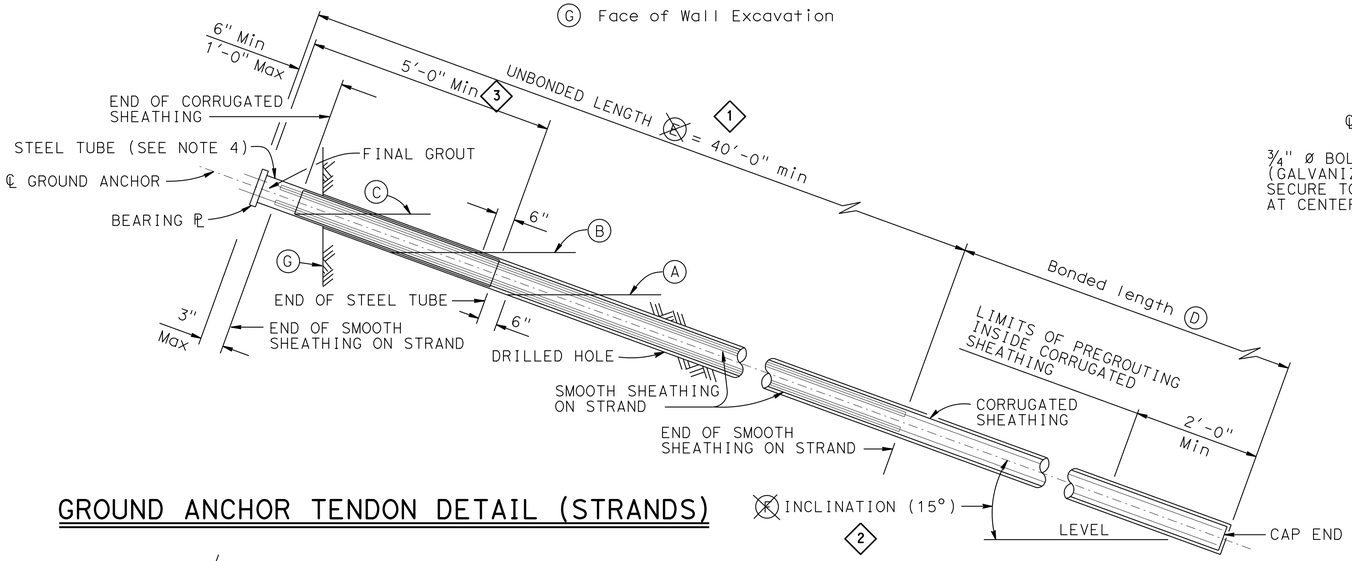

GROUND ANCHOR TENDON DETAIL (STRANDS)

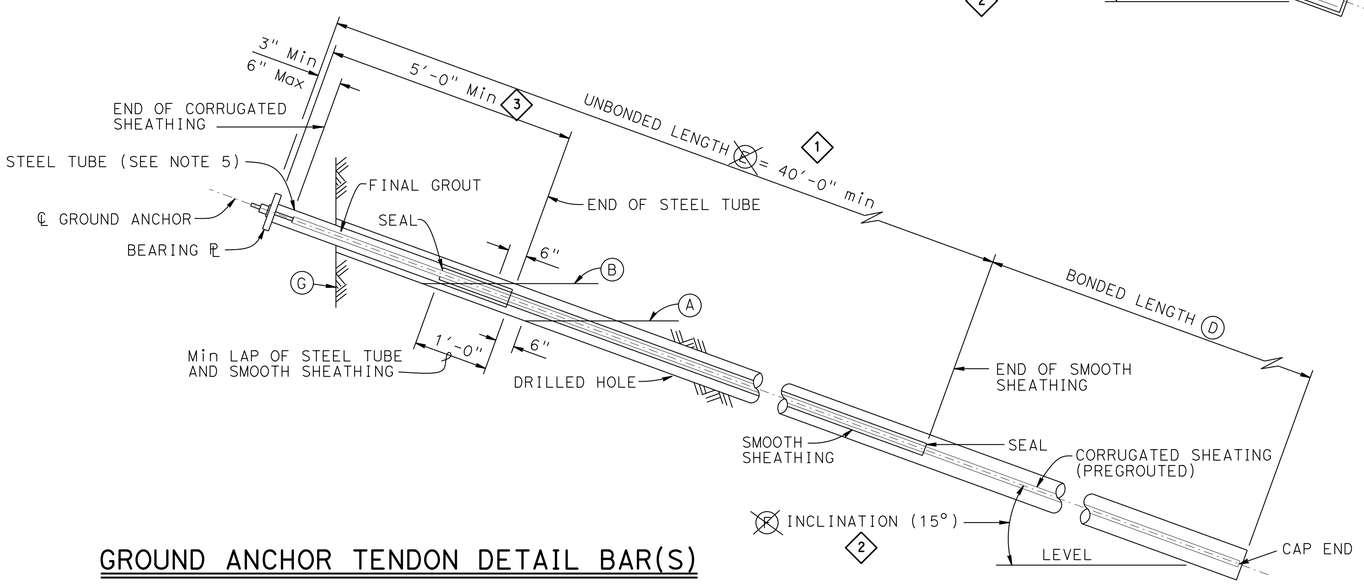

GROUND ANCHOR TENDON DETAIL BAR(S)

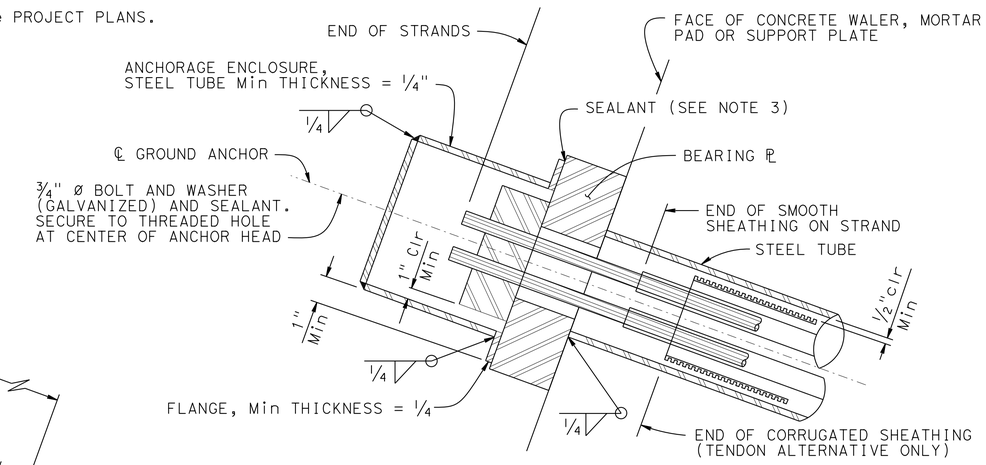

ALTERNATIVE X

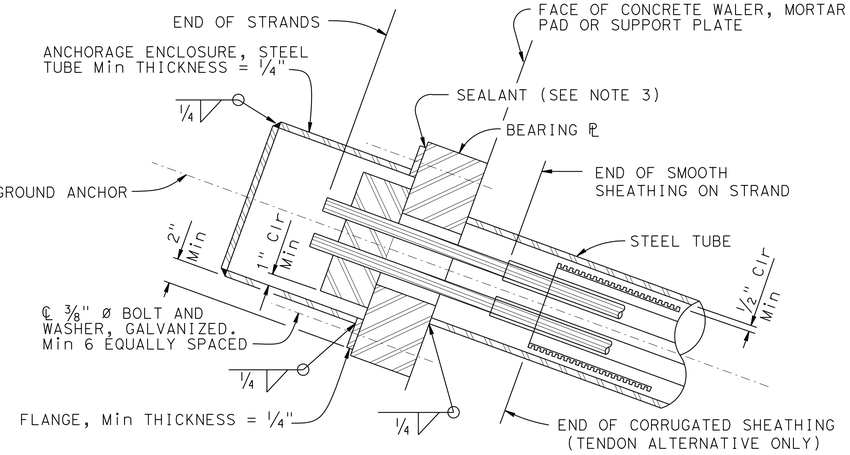

ALTERNATIVE Y

ANCHORAGE ENCLOSURE DETAILS

NO SCALE

STANDARD DRAWING			
FILE NO. xs12-040	APPROVAL DATE January 2012	(1) Show Unbonded Length	(3) Specify Minimum Tube Length
		(2) Show Inclination Angle	(4) Removed General Notes

STATE OF CALIFORNIA DEPARTMENT OF TRANSPORTATION

DIVISION OF ENGINEERING SERVICES

BRIDGE NO. 20E0064

POST MILE 34.5

FORT ROSS RETAINING WALL

SUB HORIZONTAL GROUND ANCHOR DETAILS

DS OSD 2147A (ENGLISH STANDARD DRAWING "XS" BORDER REV. (02-02-11)

ORIGINAL SCALE IN INCHES FOR REDUCED PLANS 0 1 2 3

UNIT: 3594
PROJECT NUMBER & PHASE: 04140000741
CONTRACT NO.: 04-4S6201

DISREGARD PRINTS BEARING EARLIER REVISION DATES

REVISION DATES 2-7-12

SHEET 8 OF 10

FILE => 20e0064-v-sub_horz.dgn

USERNAME => s121614 DATE PLOTTED => 14-JAN-2014 TIME PLOTTED => 05:49

DIST	COUNTY	ROUTE	POST MILES TOTAL PROJECT	SHEET No	TOTAL SHEETS
04	Son	1	34.3/34.7	56	57

Ali Kaddoura 08-26-10
REGISTERED CIVIL ENGINEER DATE

7-1-13
PLANS APPROVAL DATE

REGISTERED PROFESSIONAL ENGINEER Ali K. Kaddoura No. 55710 Exp. 12-31-12 CIVIL STATE OF CALIFORNIA

The State of California or its officers or agents shall not be responsible for the accuracy or completeness of electronic copies of this plan sheet.

BENCH MARK

BH-9 1' IP-
Found Pic Nail
26' right of station 7+29.70
℄ RTE 1
N 4,823.285
E 9,850.572
Elev. 223.81'
Vertical Datum NAVD 88

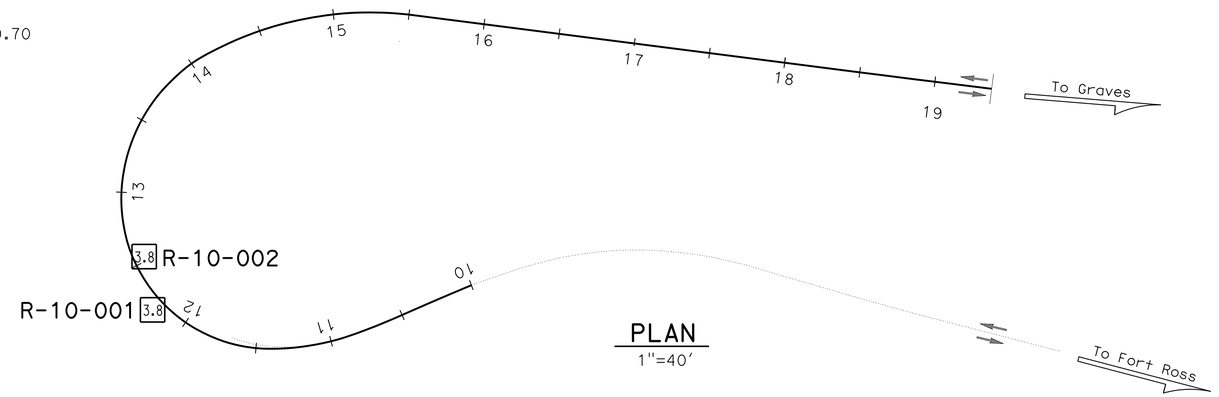

PLAN
1"=40'

NOTE: This LOTB sheet was prepared in accordance with the Caltrans Soil & Rock Logging, Classification, and Presentation Manual (April 2010).

*NR: Not Recorded.

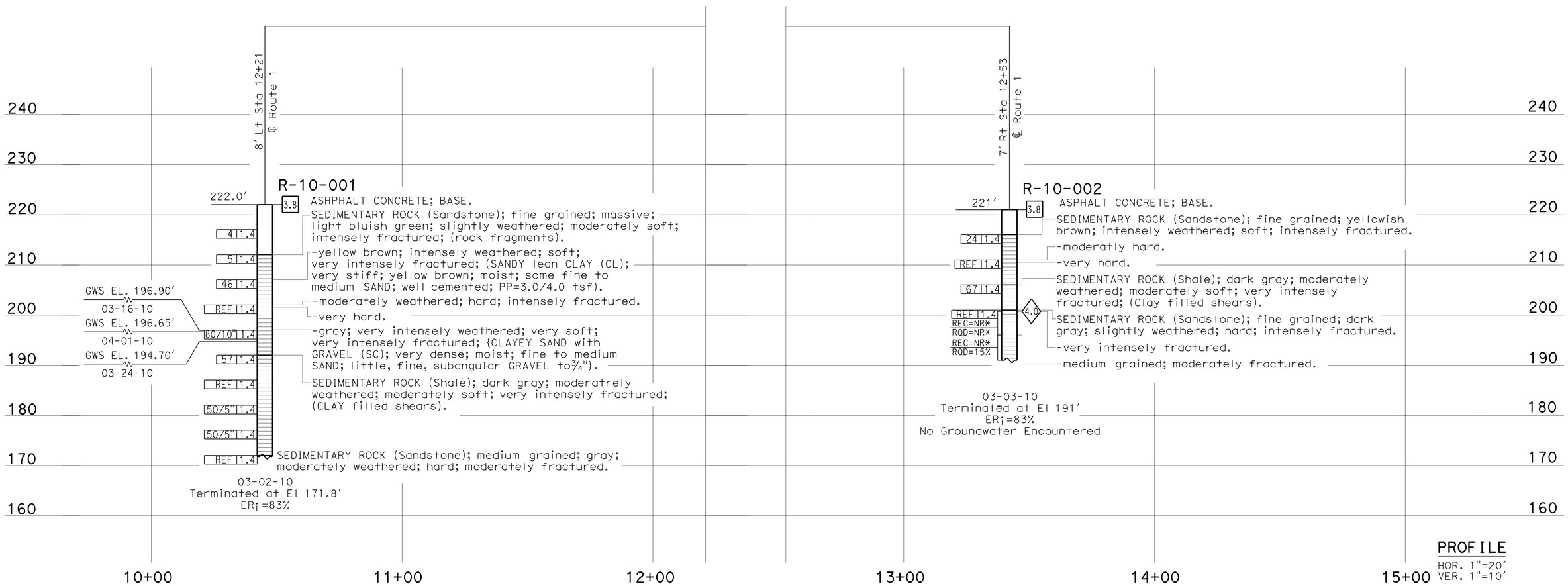

PROFILE
HOR. 1"=20'
VER. 1"=10'

ENGINEERING SERVICES		GEOTECHNICAL SERVICES	STATE OF CALIFORNIA DEPARTMENT OF TRANSPORTATION	DIVISION OF ENGINEERING SERVICES OFFICE OF GEOTECHNICAL DESIGN BRANCH	BRIDGE NO. 20E0064 POST MILES 34.5	FORT ROSS RETAINING WALL
FUNCTIONAL SUPERVISOR	DRAWN BY: M. Reynolds 06/10	FIELD INVESTIGATION BY: A. Kaddoura				LOG OF TEST BORINGS 1 of 2
NAME: H. Nikoui	CHECKED BY: R. Nashed					

OGS CIVIL LOG OF TEST BORINGS SHEET

ORIGINAL SCALE IN INCHES FOR REDUCED PLANS 0 1 2 3

UNIT: 3594
PROJECT NUMBER & PHASE: 04140000741 CONTRACT NO.: 04-4S6201

DISREGARD PRINTS BEARING EARLIER REVISION DATES → REVISION DATES 11-30-10 11-30-10 SHEET 9 OF 10

FILE => 20e0064-z-ltb01.dgn

USERNAME => s121614 DATE PLOTTED => 14-JAN-2014 TIME PLOTTED => 05:49

DIST	COUNTY	ROUTE	POST MILES TOTAL PROJECT	SHEET No	TOTAL SHEETS
04	Son	1	34.3/34.7	57	57

Ali Kaddoura 08-26-10
REGISTERED CIVIL ENGINEER DATE

7-1-13
PLANS APPROVAL DATE

REGISTERED PROFESSIONAL ENGINEER Ali K. Kaddoura No. 55710 Exp. 12-31-12 CIVIL STATE OF CALIFORNIA

The State of California or its officers or agents shall not be responsible for the accuracy or completeness of electronic copies of this plan sheet.

REFERENCE: CALTRANS SOIL & ROCK LOGGING, CLASSIFICATION, AND PRESENTATION MANUAL (2010)

PERCENT CORE RECOVERY (REC) & ROCK QUALITY DESIGNATION (RQD)

$$REC = \frac{\sum \text{Length of the recovered core pieces (in.)}}{\text{Total length of core run (in.)}} \times 100\%$$

$$RQD = \frac{\sum \text{Length of intact core pieces} \geq 4 \text{ in.}}{\text{Total length of core run (in.)}} \times 100\%$$

RQD* Indicates soundness criteria not met.

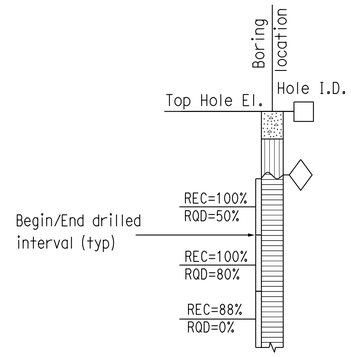

BEDDING SPACING

Description	Thickness / Spacing
Massive	Greater than 10 ft
Very Thickly Bedded	3 ft - 10 ft
Thickly Bedded	1 ft - 3 ft
Moderately Bedded	4 in. - 1 ft
Thinly Bedded	1 in. - 4 in.
Very Thinly Bedded	1/4 in. - 1 in.
Laminated	Less than 1/4 in.

LEGEND OF ROCK MATERIALS

- IGNEOUS ROCK
- SEDIMENTARY ROCK
- METAMORPHIC ROCK

ROCK HARDNESS

Description	Criteria
Extremely Hard	Cannot be scratched with a pocketknife or sharp pick. Can only be chipped with repeated heavy hammer blows.
Very Hard	Cannot be scratched with a pocketknife or sharp pick. Breaks with repeated heavy hammer blows.
Hard	Can be scratched with a pocketknife or sharp pick with difficulty (heavy pressure). Breaks with heavy hammer blows.
Moderately Hard	Can be scratched with pocketknife or sharp pick with light or moderate pressure. Breaks with moderate hammer blows.
Moderately Soft	Can be grooved 1/16 in. deep with a pocketknife or sharp pick with moderate or heavy pressure. Breaks with light hammer blow or heavy manual pressure.
Soft	Can be grooved or gouged easily by a pocketknife or sharp pick with light pressure, can be scratched with fingernail. Breaks with light to moderate manual pressure.
Very Soft	Can be readily indented, grooved or gouged with fingernail, or carved with a pocketknife. Breaks with light manual pressure.

FRACTURE DENSITY

Description	Observed Fracture Density
Unfractured	No fractures.
Very Slightly Fractured	Core lengths greater than 3 ft.
Slightly Fractured	Core lengths mostly from 1 to 3 ft.
Moderately Fractured	Core lengths mostly from 4 in. to 1 ft.
Intensely Fractured	Core lengths mostly from 1 to 4 in.
Very Intensely Fractured	Mostly chips and fragments.

WEATHERING DESCRIPTORS FOR INTACT ROCK

Description	Diagnostic Features					General Characteristics
	Chemical Weathering-Discoloration and/or Oxidation		Mechanical Weathering-Grain Boundary Conditions (Disaggregation) Primarily for Granitics and Some Coarse-Grained Sediments	Texture and Leaching		
	Body of Rock	Fracture Surfaces		Texture	Leaching	
Fresh	No discoloration, not oxidized.	No discoloration or oxidation.	No separation, intact (tight).	No change	No leaching	Hammer rings when crystalline rocks are struck.
Slightly Weathered	Discoloration or oxidation is limited to surface of, or short distance from, fractures; some feldspar crystals are dull.	Minor to complete discoloration or oxidation of most surfaces.	No visible separation, intact (tight).	Preserved	Minor leaching of some soluble minerals.	Hammer rings when crystalline rocks are struck. Body of rock not weakened.
Moderately Weathered	Discoloration or oxidation extends from fractures usually throughout; Fe-Mg minerals are "rusty," feldspar crystals are "cloudy."	All fracture surfaces are discolored or oxidized.	Partial separation of boundaries visible.	Generally preserved	Soluble minerals may be mostly leached.	Hammer does not ring when rock is struck. Body of rock is slightly weakened.
Intensely Weathered	Discoloration or oxidation throughout; all feldspars and Fe-Mg minerals are altered to clay to some extent; or chemical alteration produces in-situ disaggregation, see grain boundary conditions.	All fracture surfaces are discolored or oxidized, surfaces friable.	Partial separation, rock is friable; in semiarid conditions granitics are disaggregated.	Texture altered by chemical disintegration (hydration, argillation).	Leaching of soluble minerals may be complete.	Dull sound when struck with hammer, usually can be broken with moderate to heavy manual pressure or by light hammer blow without reference to planes of weakness such as incipient or hairline fractures, or veinlets. Rock is significantly weakened.
Decomposed	Discolored or oxidized throughout, but resistant minerals such as quartz may be unaltered; all feldspars and Fe-Mg minerals are completely altered to clay.		Complete separation of grain boundaries (disaggregated).	Resembles a soil, partial or complete remnant rock structure may be preserved; leaching of soluble minerals usually complete.		Can be granulated by hand. Resistant minerals such as quartz may be present as "stringers" or "dikes."

ENGINEERING SERVICES

GEOTECHNICAL SERVICES
PREPARED BY: M. Reynolds 06/10

STATE OF CALIFORNIA
DEPARTMENT OF TRANSPORTATION

DIVISION OF ENGINEERING SERVICES
OFFICE OF GEOTECHNICAL
DESIGN BRANCH

BRIDGE NO. 20E0064
POST MILE 34.5

FORT ROSS RETAINING WALL
LOG OF TEST BORINGS 2 of 2

GS LOTB SOIL LEGEND

ORIGINAL SCALE IN INCHES FOR REDUCED PLANS 0 1 2 3

UNIT: 3594
PROJECT NUMBER & PHASE: 04140000741
CONTRACT NO.: 04-4S6201

DISREGARD PRINTS BEARING EARLIER REVISION DATES 11-29-10

REVISION DATES | SHEET 10 | OF 10

FILE => 20e0064-z-ltb02.dgn

USERNAME => s121614 DATE PLOTTED => 14-JAN-2014 TIME PLOTTED => 06:49