ACSTP-P001(554)E

Dist	COUNTY	ROUTE	POST MILES TOTAL PROJECT	SHEET No.	TOTAL SHEETS
04	Mrn	1	15.0/17.0	1	50

STATE OF CALIFORNIA
DEPARTMENT OF TRANSPORTATION

PROJECT PLANS FOR CONSTRUCTION ON
STATE HIGHWAY

IN MARIN COUNTY
NEAR STINSON BEACH
FROM 2.2 MILE NORTH OF CALLE DEL ARROYO
TO BOLINAS ROAD

TO BE SUPPLEMENTED BY STANDARD PLANS DATED MAY 2006

INDEX OF PLANS

SHEET No.	DESCRIPTION
1	TITLE AND LOCATION MAP
2	TYPICAL CROSS SECTIONS
3-9	LAYOUTS
10	TEMPORARY WATER POLLUTION CONTROL AND DETAILS
11-12	EROSION CONTROL PLANS
13-32	DRAINAGE PLANS, PROFILES, DETAILS AND QUANTITIES
33	CONSTRUCTION AREA SIGNS
34	PAVEMENT DELINEATION AND SIGN PLAN
35	SUMMARY OF QUANTITIES
36-50	REVISED AND NEW STANDARD PLANS

THE STANDARD PLANS LIST APPLICABLE TO THIS CONTRACT IS INCLUDED IN THE NOTICE TO BIDDERS AND SPECIAL PROVISIONS BOOK.

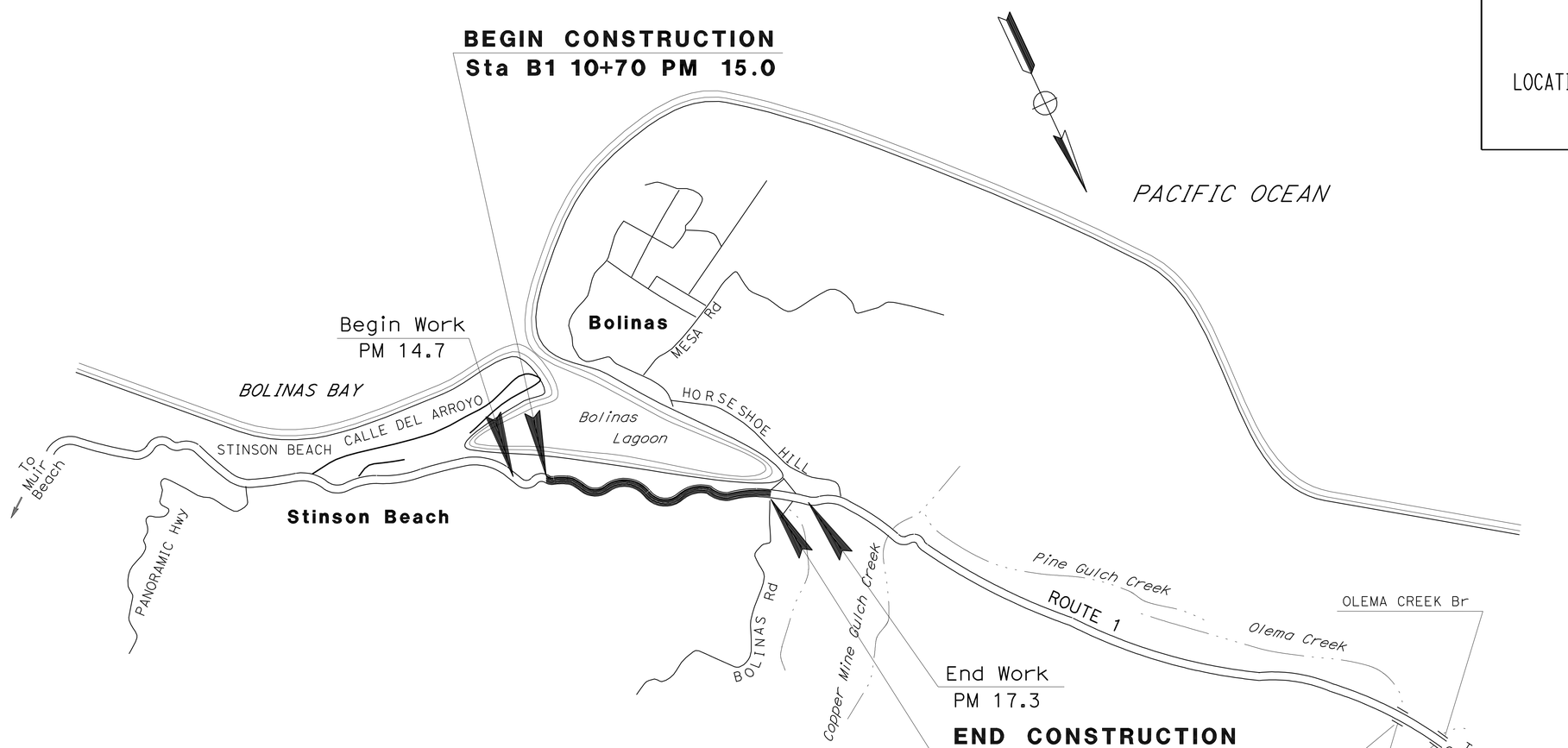

NO SCALE

THE CONTRACTOR SHALL POSSESS THE CLASS (OR CLASSES) OF LICENSE AS SPECIFIED IN THE "NOTICE TO BIDDERS."

PROJECT MANAGER: LAWRENCE A. JONES
DESIGN ENGINEER: PETER AGUILERA

Peter Aguilera 3-11-10
PROJECT ENGINEER DATE
REGISTERED CIVIL ENGINEER

June 14, 2010
PLANS APPROVAL DATE

REGISTERED PROFESSIONAL ENGINEER — Peter Aguilera — No. 55287 — Exp. 12-31-10 — CIVIL — STATE OF CALIFORNIA

THE STATE OF CALIFORNIA OR ITS OFFICERS OR AGENTS SHALL NOT BE RESPONSIBLE FOR THE ACCURACY OR COMPLETENESS OF SCANNED COPIES OF THIS PLAN SHEET.

CONTRACT No.	04-4S5404
PROJECT ID	0400001247

LAST REVISION 03-18-10
DATE PLOTTED => 15-FEB-2011
TIME PLOTTED => 13:16

Dist	COUNTY	ROUTE	POST MILES TOTAL PROJECT	SHEET No.	TOTAL SHEETS
04	Mrn	1	15.0/17.0	2	50

Peter Aguilera 3-11-10
REGISTERED CIVIL ENGINEER DATE

6-14-10
PLANS APPROVAL DATE

REGISTERED PROFESSIONAL ENGINEER Peter Aguilera No. 55287 Exp. 12-31-10 CIVIL STATE OF CALIFORNIA

THE STATE OF CALIFORNIA OR ITS OFFICERS OR AGENTS SHALL NOT BE RESPONSIBLE FOR THE ACCURACY OR COMPLETENESS OF SCANNED COPIES OF THIS PLAN SHEET.

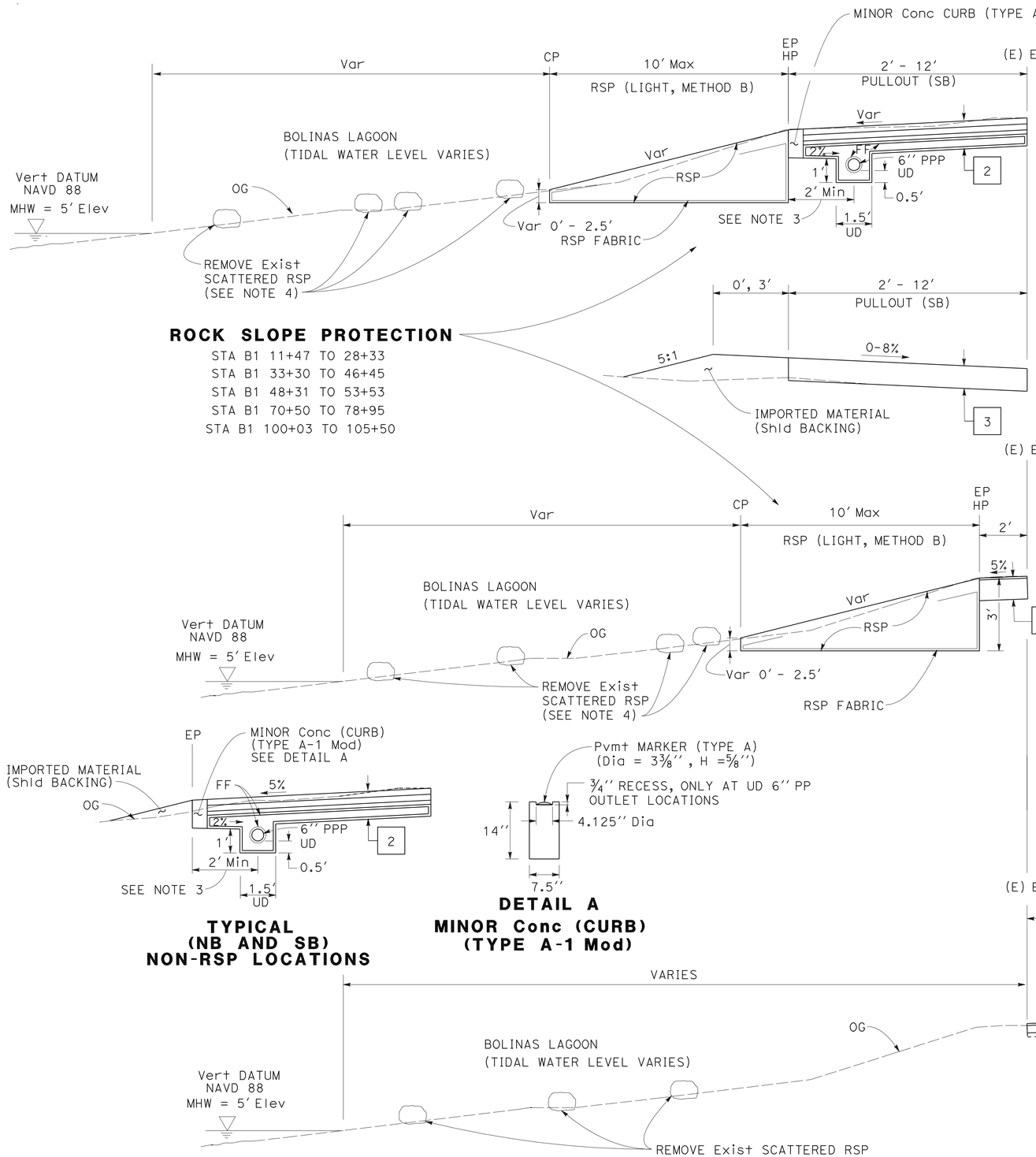

PULLOUT (SB)

STA B1 10+70 TO 12+00
STA B1 46+34 TO 48+00
STA B1 49+40 TO 51+00
STA B1 55+20 TO 56+85
STA B1 57+95 TO 59+20
STA B1 63+65 TO 66+30
STA B1 73+35 TO 74+70
STA B1 90+00 TO 94+50
STA B1 98+60 TO 99+65
STA B1 105+50 TO 106+60

ROCK SLOPE PROTECTION

STA B1 11+47 TO 28+33
STA B1 33+30 TO 46+45
STA B1 48+31 TO 53+53
STA B1 70+50 TO 78+95
STA B1 100+03 TO 105+50

PULLOUT (SB)

STA B1 80+50 TO B1 84+40

STA B1 14+00 TO 18+50
STA B1 20+76 TO 24+00
STA B1 35+50 TO 39+50
STA B1 40+59 TO 42+55
STA B1 44+50 TO 46+34
STA B1 48+31 TO 49+40
STA B1 51+00 TO 53+53
STA B1 70+50 TO 73+35
STA B1 74+70 TO 78+95
STA B1 100+03 TO 105+50

TYPICAL (NB AND SB) NON-RSP LOCATIONS

DETAIL A
MINOR Conc (CURB) (TYPE A-1 Mod)

STA B1 11+24 TO B1 113+61

STRUCTURAL SECTIONS:

1 — 0.08' HMA (BONDED WEARING COURSE - GAP GRADED); 0.87' HMA (TYPE A)

2 — 3'' HMA (OPEN GRADED); 3'' ATPB; 2'' Cl 1 Perm Mtl (TYPE A); 6'' Perm Mtl (BLANKET)

3 — 0.95' HMA (TYPE A)

4 — 0.08' HMA (BONDED WEARING COURSE - GAP GRADED); 0.30' HMA (TYPE A)

5 — 3'' HMA (TYPE A); 11'' MINOR Conc (BACKFILL) (SEE ED-1 TO ED-3)

NOTES:

1. 6'' PPP TO BE WRAPPED WITH FF.
2. Perm Mtl (BLANKET) TO BE ENCAPSULATED WITH FF.
3. UD SHALL BE INSTALLED AS CLOSE AS POSSIBLE TO EP BUT NO CLOSER THAN 2'. SEE ED-1 TO ED-3.
4. REMOVE SCATTERED RSP AND RE-USE AS RSP. PAID FOR AS RSP.
5. DEPTH OF COLD PLANE AC Pvmt SHALL BE 0.08' Min ABOVE BASE MATERIAL. BASE MATERIAL SHALL NOT BE EXPOSED.

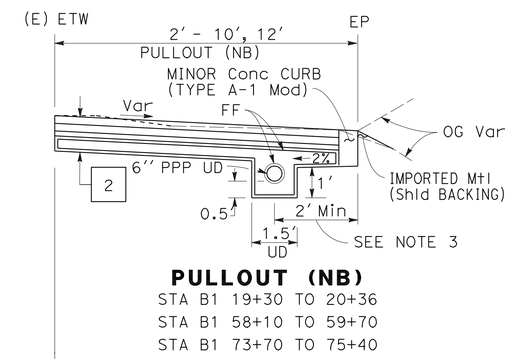

PULLOUT (NB)

STA B1 19+30 TO 20+36
STA B1 58+10 TO 59+70
STA B1 73+70 TO 75+40

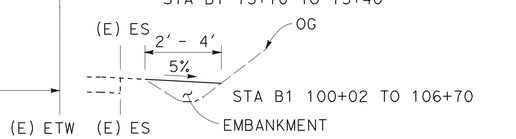

TYPICAL CROSS SECTIONS
NO SCALE

X-1

STATE OF CALIFORNIA - DEPARTMENT OF TRANSPORTATION
Caltrans®
DESIGN

FUNCTIONAL SUPERVISOR: ARLISSA PANG
CALCULATED-DESIGNED BY: SUSANA OÑATE
CHECKED BY: PETER AGUILERA
REVISED BY: PA
DATE REVISED: 3/10/10

LAST REVISION: 06-14-10
DATE PLOTTED => 13-AUG-2010
TIME PLOTTED => 13:03

Dist	COUNTY	ROUTE	POST MILES TOTAL PROJECT	SHEET No.	TOTAL SHEETS
04	Mrn	1	15.0/17.0	3	50

Peter Aguilera 3-11-10
REGISTERED CIVIL ENGINEER DATE

6-14-10
PLANS APPROVAL DATE

REGISTERED PROFESSIONAL ENGINEER
Peter Aguilera
No. 55287
Exp. 12-31-10
CIVIL
STATE OF CALIFORNIA

THE STATE OF CALIFORNIA OR ITS OFFICERS OR AGENTS SHALL NOT BE RESPONSIBLE FOR THE ACCURACY OR COMPLETENESS OF SCANNED COPIES OF THIS PLAN SHEET.

FOR ACCURATE RIGHT OF WAY DATA,
CONTACT RIGHT OF WAY ENGINEERING
AT THE DISTRICT OFFICE.

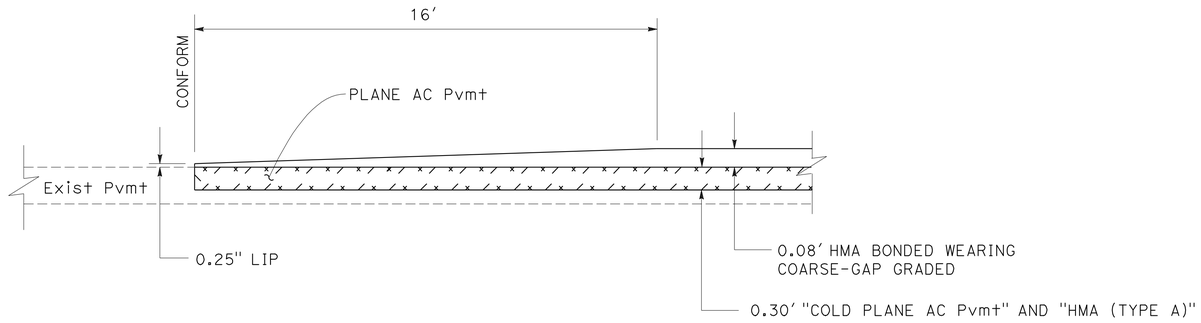

LONGITUDINAL CONFORM
NO SCALE

NOTES:

1. COORDINATE VALUES SHOWN ARE CCS83 ZONE 3W.
2. VERTICAL DATUM NAVD 88.
3. SEE DRAINAGE SHEETS FOR ADDITIONAL TEMPORARY REINFORCED SILT FENCE.

LEGEND:

- "COLD PLANE AC Pvmt", "HMA (TYPE A)" AND "HMA BONDED WEARING COURSE-GAP GRADED" SURFACING
- ROCK SLOPE PROTECTION
- No. — STRUCTURAL SECTION SEE TYPICAL CROSS SECTION X-1
- — xx — TRSF — Temp REINFORCED SILT FENCE (TYPE 1)
- ○ MILEPOST MARKER

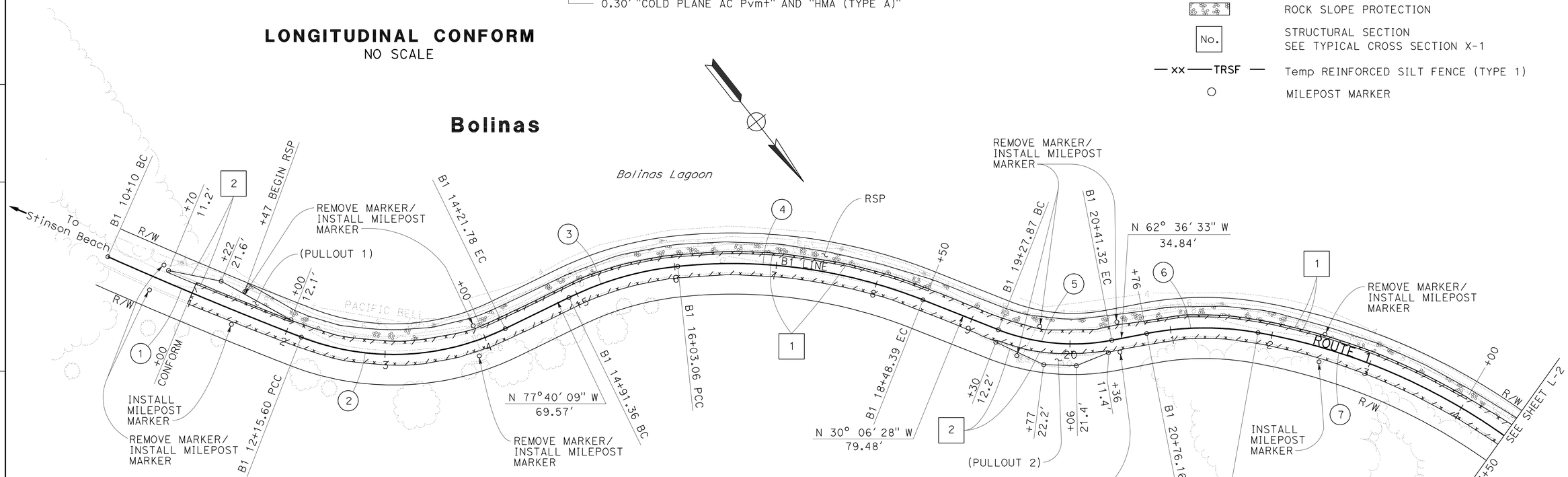

CURVE DATA

No.	R	Δ	T	L	N-COORDINATE	E-COORDINATE
1	4500′	02° 37′ 04"	102.82′	205.60′	2162814.23	5931497.33
2	250′	47° 15′ 11"	109.36′	206.18′	2164965.91	5935162.40
3	320′	20° 00′ 00"	56.42′	111.70′	2165537.62	5935216.16
4	510′	27° 33′ 41"	125.09′	245.33′	2165698.17	5935317.77
5	200′	32° 30′ 04"	58.30′	113.45′	2165410.77	5934663.69
6	300′	21° 00′ 00"	55.60′	109.96′	2165870.75	5934862.78
7	600′	25° 33′ 06"	136.05′	267.58′	2166069.96	5935087.09

LAYOUT
SCALE: 1" = 50′

L-1

PA	3/10/10		
SO	3/9/10		
REVISED BY	DATE REVISED		
SUSANA OÑATE	PETER AGUILERA	CALCULATED-DESIGNED BY	CHECKED BY
FUNCTIONAL SUPERVISOR	ARLISSA PANG		

STATE OF CALIFORNIA - DEPARTMENT OF TRANSPORTATION
Caltrans
DESIGN

LAST REVISION 05-12-10 | DATE PLOTTED => 16-JUN-2010 | TIME PLOTTED => 10:08

Dist	COUNTY	ROUTE	POST MILES TOTAL PROJECT	SHEET No.	TOTAL SHEETS
04	Mrn	1	15.0/17.0	4	50

Peter Aguilera 3-11-10
REGISTERED CIVIL ENGINEER DATE

6-14-10
PLANS APPROVAL DATE

REGISTERED PROFESSIONAL ENGINEER
Peter Aguilera
No. 55287
Exp. 12-31-10
CIVIL
STATE OF CALIFORNIA

THE STATE OF CALIFORNIA OR ITS OFFICERS OR AGENTS SHALL NOT BE RESPONSIBLE FOR THE ACCURACY OR COMPLETENESS OF SCANNED COPIES OF THIS PLAN SHEET.

FOR ACCURATE RIGHT OF WAY DATA,
CONTACT RIGHT OF WAY ENGINEERING
AT THE DISTRICT OFFICE.

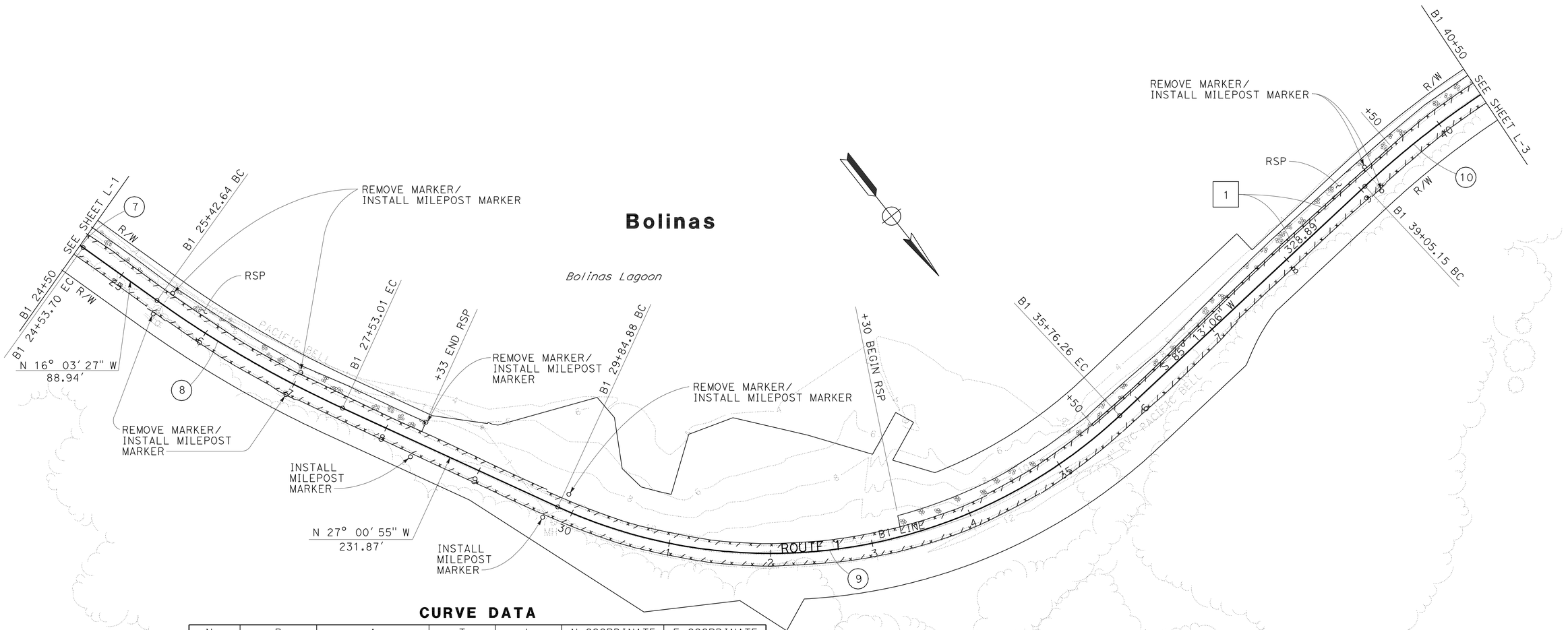

CURVE DATA

No.	R	Δ	T	L	N-COORDINATE	E-COORDINATE
7	600′	25° 33′ 06"	136.05′	267.58′	2166069.96	5935087.09
8	1100′	10° 57′ 28"	105.51′	210.37′	2165685.21	5933428.81
9	500′	67° 45′ 59"	335.77′	591.37′	2166164.31	5933858.03
10	880′	11° 00′ 00"	84.73′	168.95′	2167512.10	5933415.24

FOR NOTES, ABBREVIATIONS
AND LEGEND, SEE SHEET L-1

LAYOUT
SCALE: 1" = 50′

L-2

STATE OF CALIFORNIA - DEPARTMENT OF TRANSPORTATION
Caltrans
DESIGN

FUNCTIONAL SUPERVISOR: ARLISSA PANG
CALCULATED-DESIGNED BY: SUSANA OÑATE
CHECKED BY: PETER AGUILERA
REVISED BY: SO
DATE REVISED: 3/10/10

LAST REVISION 05-13-10
DATE PLOTTED => 16-JUN-2010
TIME PLOTTED => 10:08

Dist	COUNTY	ROUTE	POST MILES TOTAL PROJECT	SHEET No.	TOTAL SHEETS
04	Mrn	1	15.0/17.0	5	50

Peter Aguilera 3-11-10
REGISTERED CIVIL ENGINEER DATE

6-14-10
PLANS APPROVAL DATE

REGISTERED PROFESSIONAL ENGINEER Peter Aguilera No. 55287 Exp. 12-31-10 CIVIL STATE OF CALIFORNIA

THE STATE OF CALIFORNIA OR ITS OFFICERS OR AGENTS SHALL NOT BE RESPONSIBLE FOR THE ACCURACY OR COMPLETENESS OF SCANNED COPIES OF THIS PLAN SHEET.

FOR ACCURATE RIGHT OF WAY DATA,
CONTACT RIGHT OF WAY ENGINEERING
AT THE DISTRICT OFFICE.

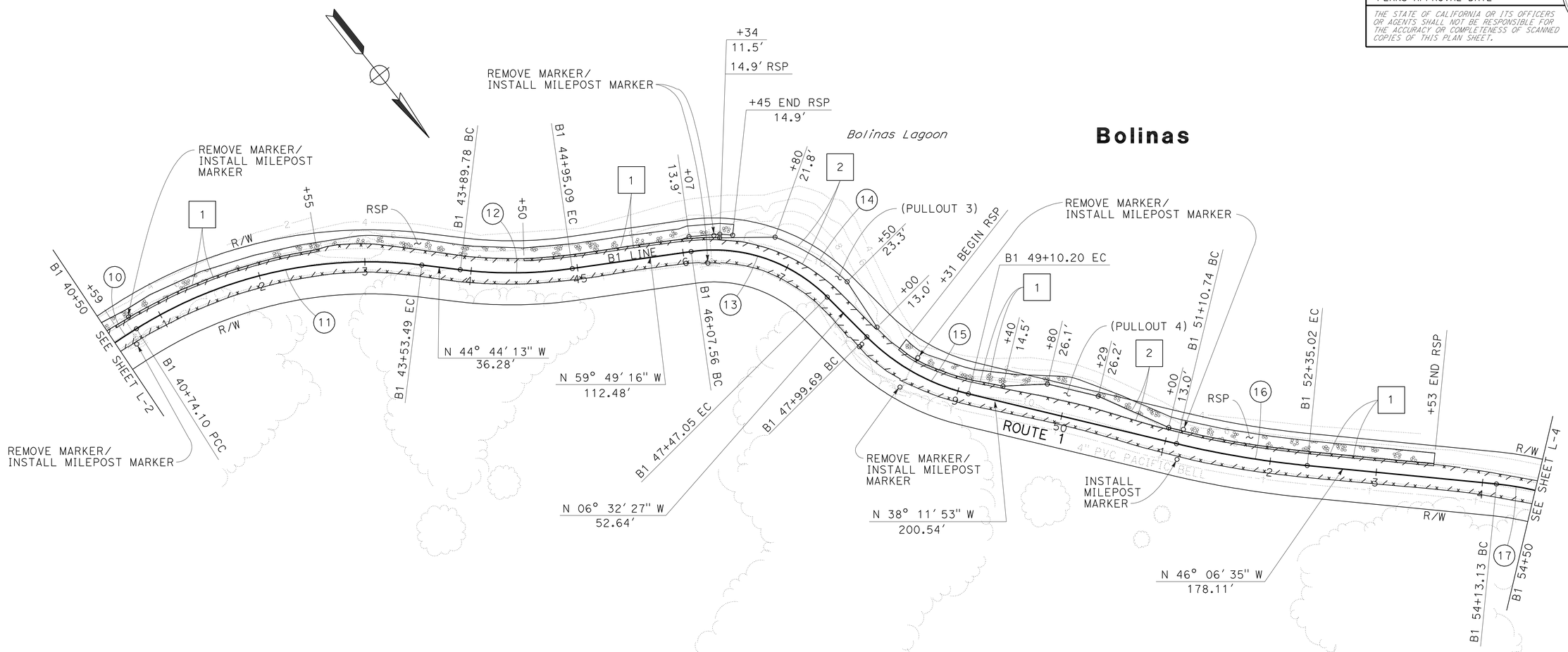

CURVE DATA

No.	R	Δ	T	L	N-COORDINATE	E-COORDINATE
10	880′	11° 00′ 00″	84.73′	168.95′	2167512.10	5933415.24
11	410′	39° 02′ 41″	145.37′	279.40′	2167044.86	5933364.33
12	400′	15° 05′ 02″	52.96′	105.31′	2166500.50	5932763.41
13	150′	53° 16′ 50″	75.25′	139.49′	2167032.51	5932942.67
14	200′	22° 53′ 26″	40.49′	79.90′	2167045.31	5932967.93
15	200′	31° 39′ 26″	56.70′	110.50′	2167044.94	5932588.95
16	900′	07° 54′ 41″	62.24′	124.28′	2166769.65	5931914.79
17	270′	30° 00′ 00″	72.35′	141.37′	2167736.34	5932597.60

FOR NOTES, ABBREVIATIONS AND LEGEND, SEE SHEET L-1

LAYOUT
SCALE: 1" = 50′

L-3

REVISED BY	DATE REVISED
PA	3/10/10
SO	3/9/10

SUSANA OÑATE — PETER AGUILERA
CALCULATED-DESIGNED BY — CHECKED BY
FUNCTIONAL SUPERVISOR: ARLISSA PANG

STATE OF CALIFORNIA - DEPARTMENT OF TRANSPORTATION
Caltrans
DESIGN

LAST REVISION 05-17-10 | DATE PLOTTED => 16-JUN-2010 | TIME PLOTTED => 10:09

Dist	COUNTY	ROUTE	POST MILES TOTAL PROJECT	SHEET No.	TOTAL SHEETS
04	Mrn	1	15.0/17.0	6	50

Peter Aguilera 3-11-10
REGISTERED CIVIL ENGINEER DATE

6-14-10
PLANS APPROVAL DATE

REGISTERED PROFESSIONAL ENGINEER Peter Aguilera No. 55287 Exp. 12-31-10 CIVIL STATE OF CALIFORNIA

THE STATE OF CALIFORNIA OR ITS OFFICERS OR AGENTS SHALL NOT BE RESPONSIBLE FOR THE ACCURACY OR COMPLETENESS OF SCANNED COPIES OF THIS PLAN SHEET.

FOR ACCURATE RIGHT OF WAY DATA,
CONTACT RIGHT OF WAY ENGINEERING
AT THE DISTRICT OFFICE.

CURVE DATA

No.	R	Δ	T	L	N-COORDINATE	E-COORDINATE
17	270′	30° 00′ 00"	72.35′	141.37′	2167736.34	5932597.60
18	400′	08° 27′ 54"	29.60′	59.10′	2167739.88	5932706.59
19	290′	22° 26′ 39"	57.54′	113.60′	2167741.89	5932616.82
20	410′	64° 18′ 14"	257.71′	460.15′	2168089.21	5931951.07
21	660′	13° 59′ 55"	81.03′	161.25′	2167999.45	5931623.36
22	380′	32° 56′ 07"	112.33′	218.43′	2168265.67	5931710.12
23	1400′	23° 27′ 52"	290.75′	573.35′	2169979.64	5931229.18

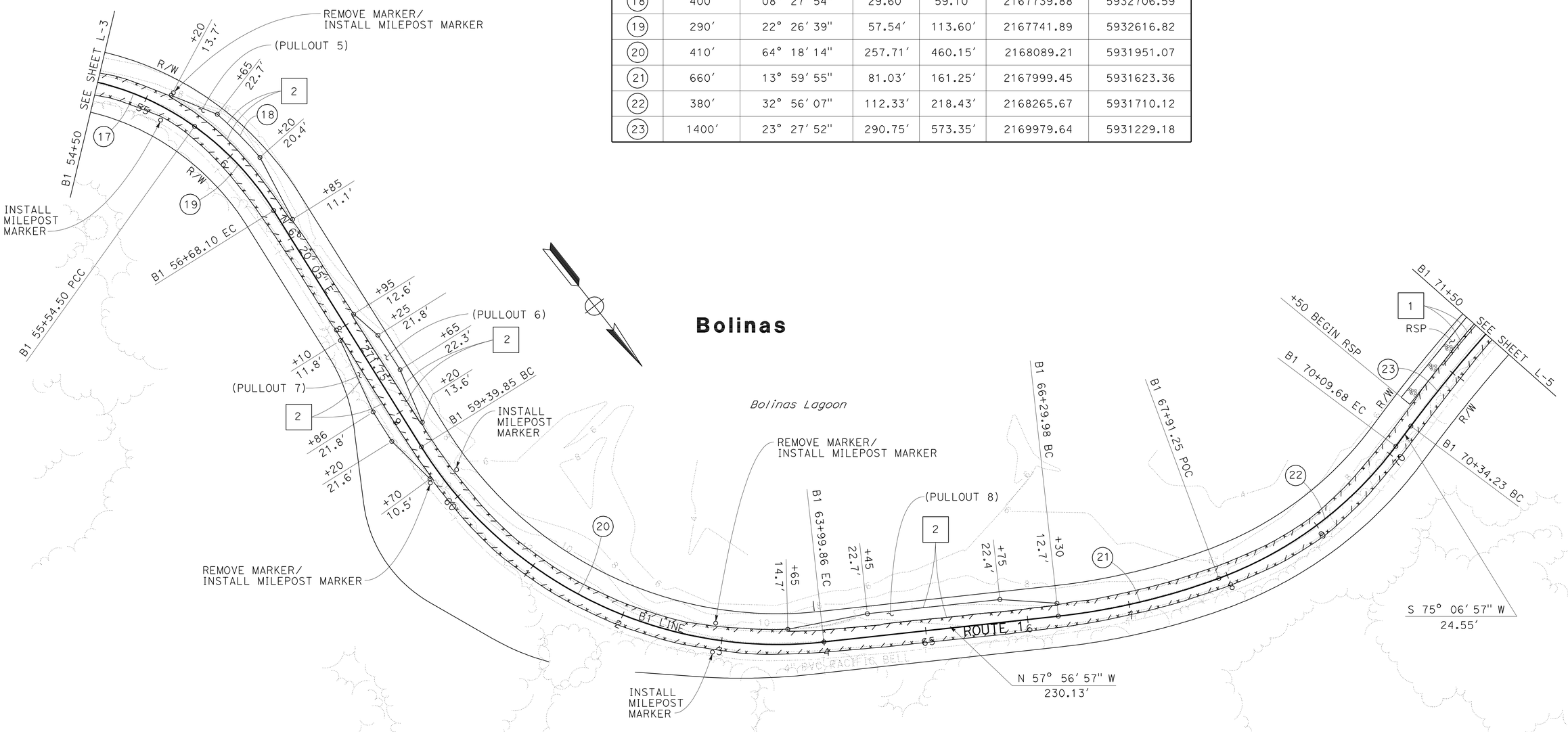

FOR NOTES, ABBREVIATIONS
AND LEGEND, SEE SHEET L-1

LAYOUT
SCALE: 1" = 50′

L-4

PA	3/10/10		
SO	3/9/10	REVISED BY	DATE REVISED
SUSANA OÑATE		CALCULATED-	
PETER AGUILERA		DESIGNED BY	
		CHECKED BY	
FUNCTIONAL SUPERVISOR			
ARLISSA PANG			

STATE OF CALIFORNIA - DEPARTMENT OF TRANSPORTATION
Caltrans
DESIGN

LAST REVISION 05-13-10 | DATE PLOTTED => 16-JUN-2010 | TIME PLOTTED => 13:27

Dist	COUNTY	ROUTE	POST MILES TOTAL PROJECT	SHEET No.	TOTAL SHEETS
04	Mrn	1	15.0/17.0	7	50

Peter Aguilera 3-11-10
REGISTERED CIVIL ENGINEER DATE

6-14-10
PLANS APPROVAL DATE

REGISTERED PROFESSIONAL ENGINEER
Peter Aguilera
No. 55287
Exp. 12-31-10
CIVIL
STATE OF CALIFORNIA

THE STATE OF CALIFORNIA OR ITS OFFICERS OR AGENTS SHALL NOT BE RESPONSIBLE FOR THE ACCURACY OR COMPLETENESS OF SCANNED COPIES OF THIS PLAN SHEET.

FOR ACCURATE RIGHT OF WAY DATA,
CONTACT RIGHT OF WAY ENGINEERING
AT THE DISTRICT OFFICE.

Bolinas

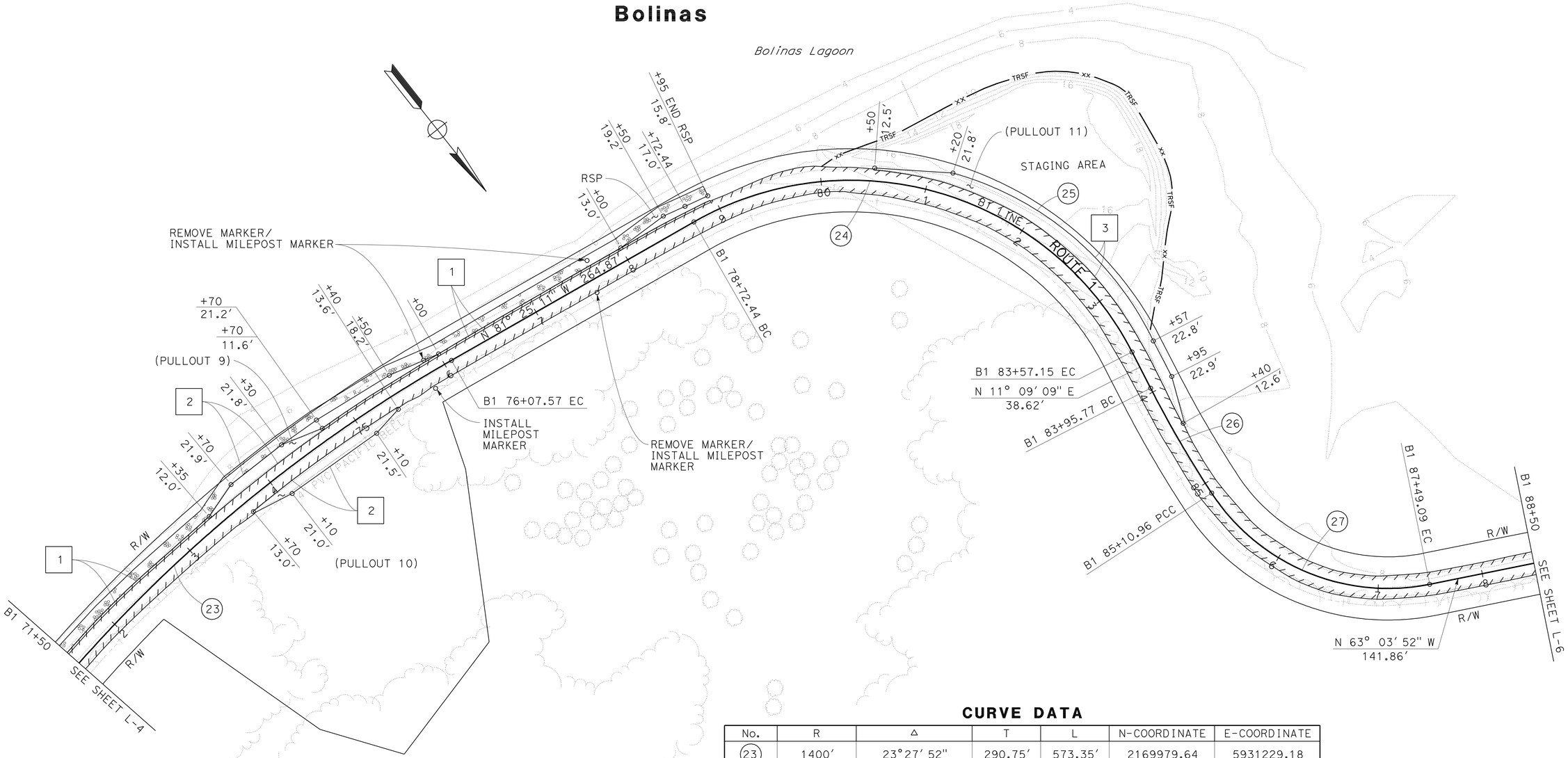

CURVE DATA

No.	R	Δ	T	L	N-COORDINATE	E-COORDINATE
23	1400′	23°27′ 52"	290.75′	573.35′	2169979.64	5931229.18
24	300′	92°34′ 20"	313.78′	484.71′	2168931.46	5930803.15
25	300′	48°50′ 41"	136.23′	255.75′	2168927.60	5930779.08
26	1100′	05°59′ 59"	57.65′	115.19′	2169240.16	5929437.00
27	200′	68°13′ 03"	135.45′	238.12′	2169159.32	5930333.43

FOR NOTES, ABBREVIATIONS
AND LEGEND, SEE SHEET L-1

LAYOUT
SCALE: 1" = 50′

L-5

CALCULATED- DESIGNED BY	SUSANA OÑATE	REVISED BY	VH
CHECKED BY	PETER AGUILERA	DATE REVISED	3/10/10
FUNCTIONAL SUPERVISOR	ARLISSA PANG		SO 3/9/10

STATE OF CALIFORNIA - DEPARTMENT OF TRANSPORTATION
Caltrans®
DESIGN

LAST REVISION 05-17-10
DATE PLOTTED => 16-JUN-2010
TIME PLOTTED => 10:09

Dist	COUNTY	ROUTE	POST MILES TOTAL PROJECT	SHEET No.	TOTAL SHEETS
04	Mrn	1	15.0/17.0	8	50

Petey Aguilera 3-11-10
REGISTERED CIVIL ENGINEER DATE

6-14-10
PLANS APPROVAL DATE

REGISTERED PROFESSIONAL ENGINEER
Peter Aguilera
No. 55287
Exp. 12-31-10
CIVIL
STATE OF CALIFORNIA

THE STATE OF CALIFORNIA OR ITS OFFICERS OR AGENTS SHALL NOT BE RESPONSIBLE FOR THE ACCURACY OR COMPLETENESS OF SCANNED COPIES OF THIS PLAN SHEET.

FOR ACCURATE RIGHT OF WAY DATA,
CONTACT RIGHT OF WAY ENGINEERING
AT THE DISTRICT OFFICE.

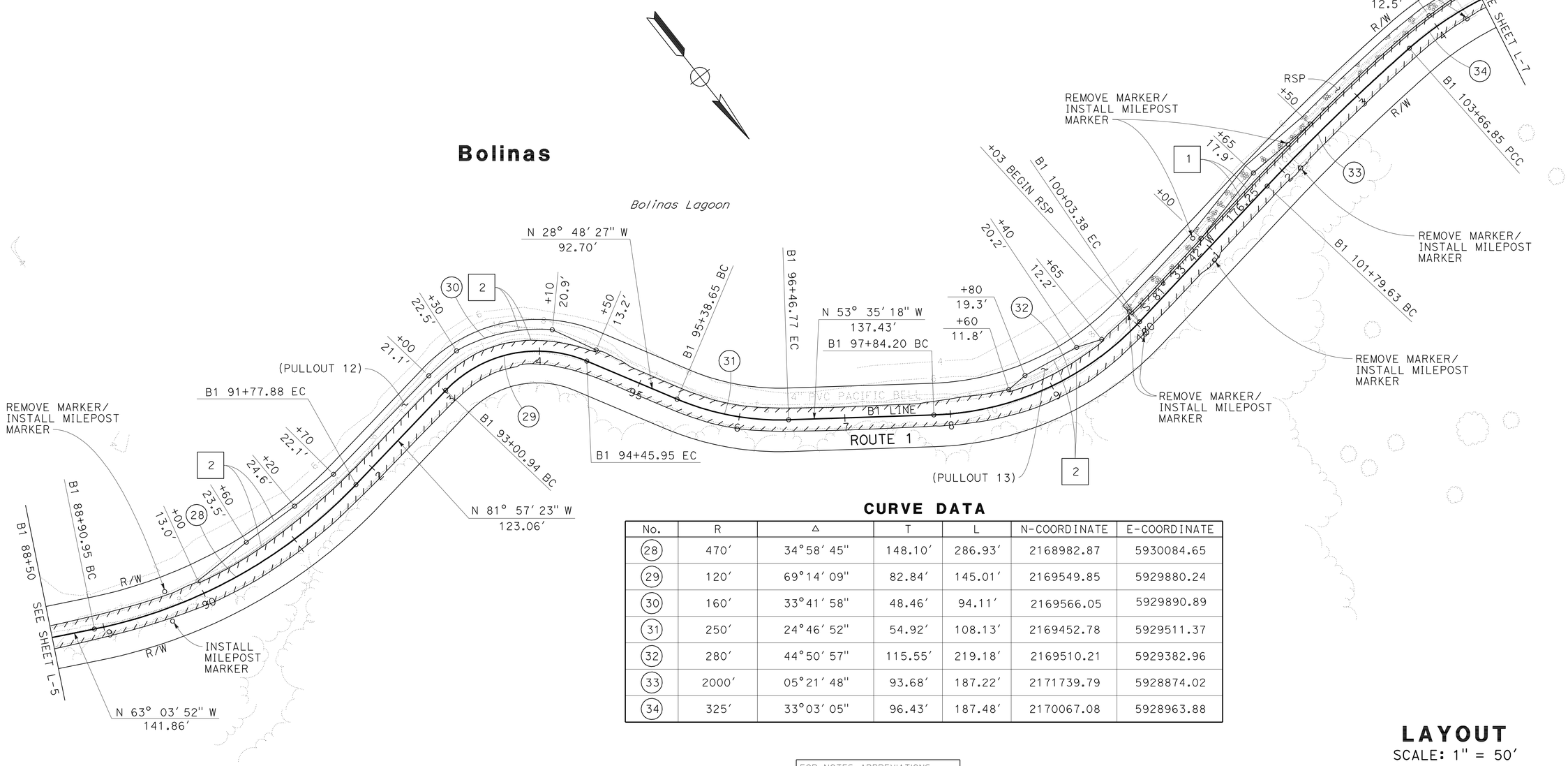

CURVE DATA

No.	R	Δ	T	L	N-COORDINATE	E-COORDINATE
28	470′	34°58′45″	148.10′	286.93′	2168982.87	5930084.65
29	120′	69°14′09″	82.84′	145.01′	2169549.85	5929880.24
30	160′	33°41′58″	48.46′	94.11′	2169566.05	5929890.89
31	250′	24°46′52″	54.92′	108.13′	2169452.78	5929511.37
32	280′	44°50′57″	115.55′	219.18′	2169510.21	5929382.96
33	2000′	05°21′48″	93.68′	187.22′	2171739.79	5928874.02
34	325′	33°03′05″	96.43′	187.48′	2170067.08	5928963.88

FOR NOTES, ABBREVIATIONS
AND LEGEND, SEE SHEET L-1

LAYOUT

SCALE: 1″ = 50′

L-6

CALCULATED-DESIGNED BY	SUSANA OÑATE	REVISED BY	SO
CHECKED BY	PETER AGUILERA	DATE REVISED	3/9/10
FUNCTIONAL SUPERVISOR	ARLISSA PANG		VH
			3/10/10

STATE OF CALIFORNIA - DEPARTMENT OF TRANSPORTATION
Caltrans
DESIGN

LAST REVISION 05-17-10
DATE PLOTTED => 13-AUG-2010
TIME PLOTTED => 13:03

Dist	COUNTY	ROUTE	POST MILES TOTAL PROJECT	SHEET No.	TOTAL SHEETS
04	Mrn	1	15.0/17.0	9	50

Peter Aguilera 3-11-10
REGISTERED CIVIL ENGINEER DATE

6-14-10
PLANS APPROVAL DATE

REGISTERED PROFESSIONAL ENGINEER
Peter Aguilera
No. 55287
Exp. 12-31-10
CIVIL
STATE OF CALIFORNIA

THE STATE OF CALIFORNIA OR ITS OFFICERS OR AGENTS SHALL NOT BE RESPONSIBLE FOR THE ACCURACY OR COMPLETENESS OF SCANNED COPIES OF THIS PLAN SHEET.

FOR ACCURATE RIGHT OF WAY DATA,
CONTACT RIGHT OF WAY ENGINEERING
AT THE DISTRICT OFFICE.

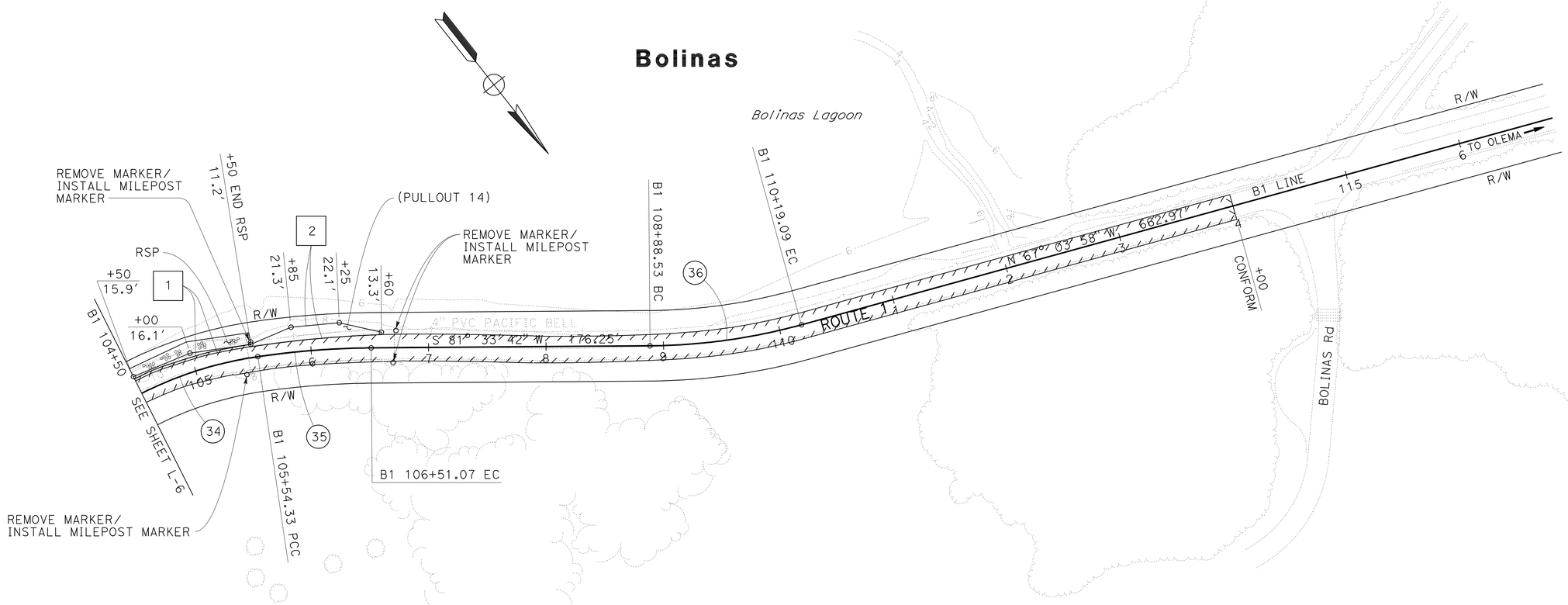

CURVE DATA

No.	R	Δ	T	L	N-COORDINATE	E-COORDINATE
34	325′	33° 03′ 05"	96.43′	187.48′	2170067.08	5928963.88
35	700′	07°55′ 08"	48.45′	96.74′	2170391.89	5929151.23
36	500′	14°57′ 40"	65.65′	130.56′	2169590.80	5928226.81

FOR NOTES, ABBREVIATIONS
AND LEGEND, SEE SHEET L-1

LAYOUT
SCALE: 1" = 50′

L-7

STATE OF CALIFORNIA - DEPARTMENT OF TRANSPORTATION
Caltrans
DESIGN

FUNCTIONAL SUPERVISOR: ARLISSA PANG
CALCULATED-DESIGNED BY: SUSANA OÑATE
CHECKED BY: PETER AGUILERA
REVISED BY: SO
DATE REVISED: 3/9/10
VH 3/10/10

LAST REVISION 05-17-10
DATE PLOTTED => 13-AUG-2010
TIME PLOTTED => 13:03

Dist	COUNTY	ROUTE	POST MILES TOTAL PROJECT	SHEET No.	TOTAL SHEETS
04	Mrn	1	15.0/17.0	10	50

REGISTERED CIVIL ENGINEER 3-11-10 DATE

6-14-10
PLANS APPROVAL DATE

REGISTERED PROFESSIONAL ENGINEER
Kamran Nakhjiri
No. 57499
Exp. 12-31-11
CIVIL
STATE OF CALIFORNIA

THE STATE OF CALIFORNIA OR ITS OFFICERS OR AGENTS SHALL NOT BE RESPONSIBLE FOR THE ACCURACY OR COMPLETENESS OF SCANNED COPIES OF THIS PLAN SHEET.

NOTES:

1. TEMPORARY DELINEATOR (CLASS 2) SHALL BE "TYPE J" AND PLACED AT RSP AND DRAINAGE WORK LOCATIONS 25 FEET ON CENTER. NO LOWER THAN Elev 5′ NAVD 88.
2. TEMPORARY GRAVEL BAG BERM SHOWN FOR LONGITUDINAL PLACEMENT ONLY. WHERE POSSIBLE, Temp GRAVEL BAG BERM SHALL BE PLACED 2′ FROM THE ETW. WHERE NECESSARY TO PLACE WITHIN 2′ OF ETW, Temp GRAVEL BAG BERM SHALL HAVE A HEIGHT OF 3′′.
3. EXACT LOCATIONS FOR ALL WPC MEASURES AS SHOWN OR TO BE DETERMINED BY THE ENGINEER.
4. EXACT LOCATION OF THE TEMPORARY GRAVEL BAG BERM TO BE DETERMINED BY THE ENGINEER.
5. TEMPORARY DELINEATOR (CLASS 2) SHALL SERVE AS WORK LIMIT BOUNDARY. NO WORK SHALL BE CONDUCTED BEYOND DELINEATORS. DELINEATORS SHALL BE REMOVED ONCE WORK AT THAT LOCATION HAS BEEN COMPLETED.
6. TEMPORARY REINFORCED SILT FENCE (TYPE 1) SHOWN ON DRAINAGE PLANS.
7. ROCK SLOPE PROTECTION LOCATIONS SHOWN ON LAYOUT SHEETS.

ABBREVIATION:

MHW MEAN HIGH WATER

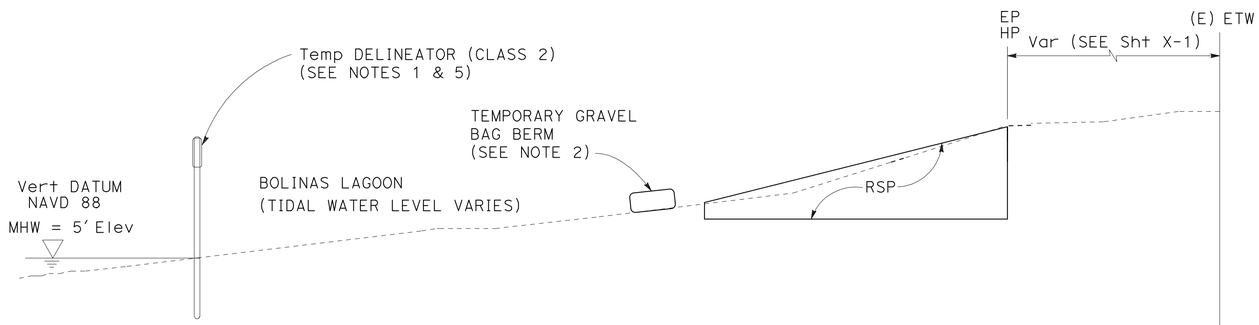

TYPICAL TEMPORARY GRAVEL BAG BERM AND DELINEATOR CLASS 2 AT ROCK SLOPE PROTECTION

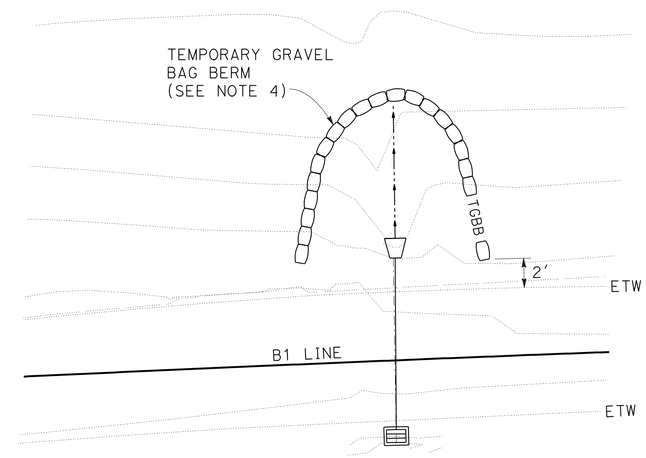

TYPICAL TEMPORARY GRAVEL BAG BERM AT DRAINAGE LOCATIONS

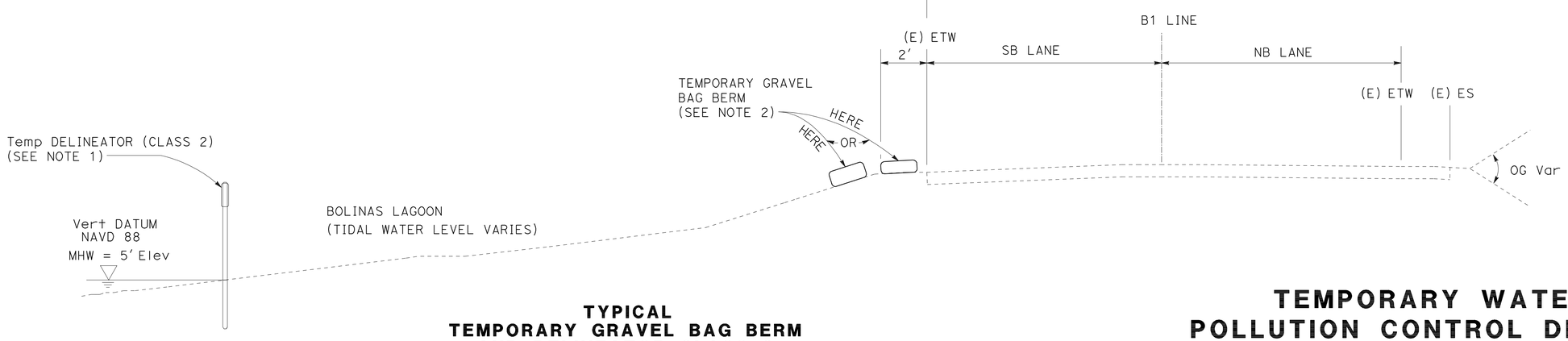

TYPICAL TEMPORARY GRAVEL BAG BERM AND DELINEATOR CLASS 2 AT NON ROCK SLOPE PROTECTION

THIS PLAN ACCURATE FOR WATER POLLUTION CONTROL WORK ONLY.

TEMPORARY WATER POLLUTION CONTROL DETAILS

NO SCALE

WPCD-1

STATE OF CALIFORNIA - DEPARTMENT OF TRANSPORTATION
Caltrans® WATER QUALITY

FUNCTIONAL SUPERVISOR: HARDEEP S. TAKHAR
CALCULATED-DESIGNED BY: KAMRAN B. NAKHJIRI
CHECKED BY: HARDEEP S. TAKHAR
REVISED BY: KN
DATE REVISED: 3/9/10

LAST REVISION 05-13-10
DATE PLOTTED => 16-JUN-2010
TIME PLOTTED => 09:50

Dist	COUNTY	ROUTE	POST MILES TOTAL PROJECT	SHEET No.	TOTAL SHEETS
04	Mrn	1	15.0/17.0	11	50

LICENSED LANDSCAPE ARCHITECT

6-14-10
PLANS APPROVAL DATE

LICENSED LANDSCAPE ARCHITECT
SALLY BANG No.5262
Signature
11-30-11
Renewal Date
Date
STATE OF CALIFORNIA

THE STATE OF CALIFORNIA OR ITS OFFICERS OR AGENTS SHALL NOT BE RESPONSIBLE FOR THE ACCURACY OR COMPLETENESS OF SCANNED COPIES OF THIS PLAN SHEET.

FOR ACCURATE RIGHT OF WAY DATA,
CONTACT RIGHT OF WAY ENGINEERING
AT THE DISTRICT OFFICE.

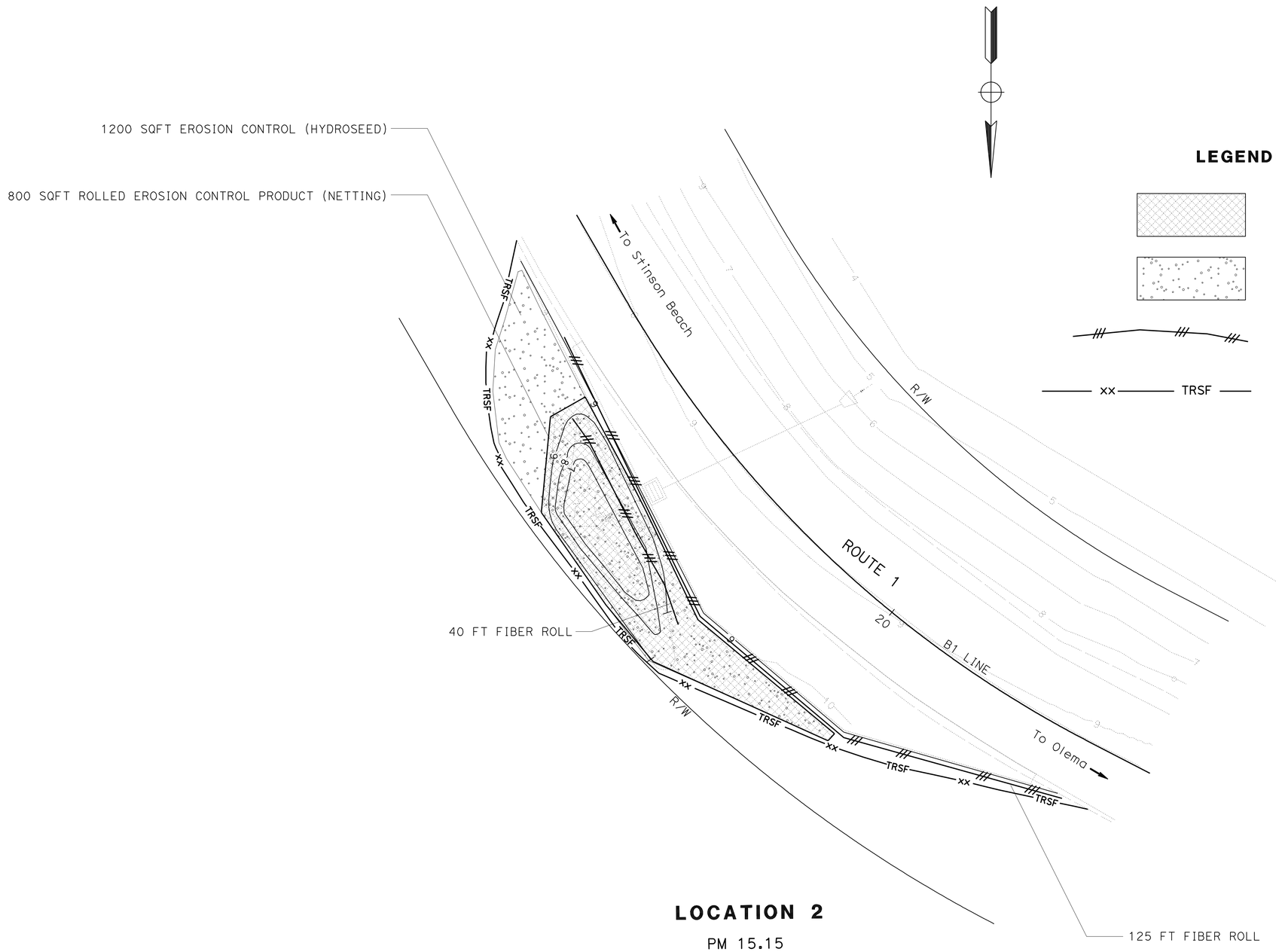

LEGEND:

- ROLLED EROSION CONTROL PRODUCT (NETTING)
- EROSION CONTROL (HYDROSEED)
- FIBER ROLL
- xx —— TRSF —— Temp REINFORCED SILT FENCE (TYPE 1)

LOCATION 2

PM 15.15

THIS PLAN ACCURATE FOR
EROSION CONTROL WORK ONLY.

EROSION CONTROL PLAN

SCALE: 1" = 10'

EC-1

REVISED BY	DATE REVISED
AK	3/9/10

CALCULATED-DESIGNED BY: ANGELA KWAN
CHECKED BY: SALLY BANG
SENIOR LANDSCAPE ARCHITECT: DAVID W. YAM

STATE OF CALIFORNIA - DEPARTMENT OF TRANSPORTATION
Caltrans®
WATER QUALITY

LAST REVISION 05-13-10
DATE PLOTTED => 16-JUN-2010
TIME PLOTTED => 09:50

Dist	COUNTY	ROUTE	POST MILES TOTAL PROJECT	SHEET No.	TOTAL SHEETS
04	Mrn	1	15.0/17.0	12	50

LICENSED LANDSCAPE ARCHITECT

6-14-10
PLANS APPROVAL DATE

LICENSED LANDSCAPE ARCHITECT — SALLY BANG No.5086 — Signature — 11-30-11 Renewal Date — Date — STATE OF CALIFORNIA

THE STATE OF CALIFORNIA OR ITS OFFICERS OR AGENTS SHALL NOT BE RESPONSIBLE FOR THE ACCURACY OR COMPLETENESS OF SCANNED COPIES OF THIS PLAN SHEET.

FOR ACCURATE RIGHT OF WAY DATA,
CONTACT RIGHT OF WAY ENGINEERING
AT THE DISTRICT OFFICE.

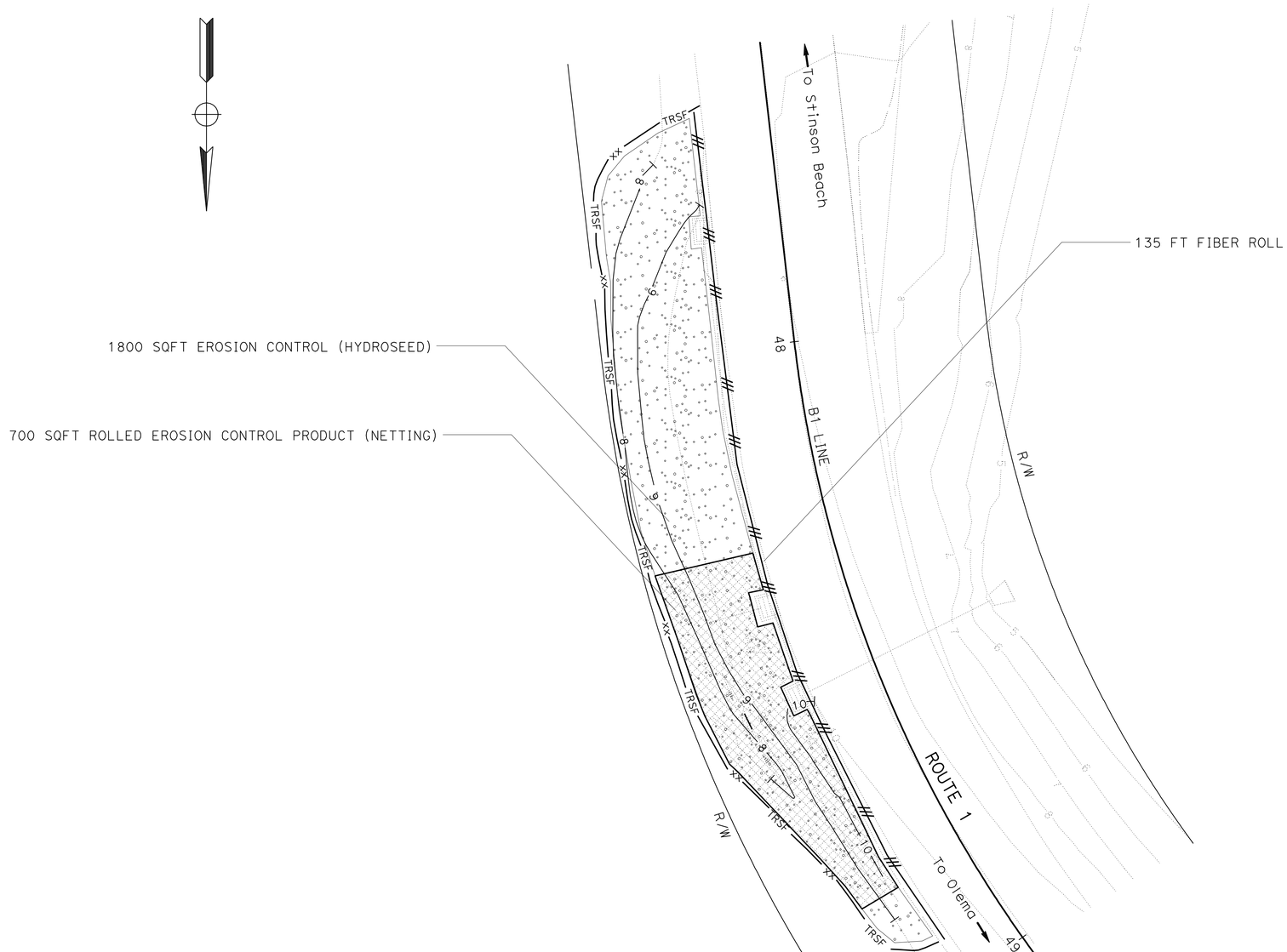

LOCATION 8
PM 15.71

FOR NOTES, ABBREVIATIONS AND LEGEND, SEE SHEET EC-1

THIS PLAN ACCURATE FOR EROSION CONTROL WORK ONLY.

EROSION CONTROL PLAN

SCALE: 1" = 10'

EC-2

STATE OF CALIFORNIA - DEPARTMENT OF TRANSPORTATION
Caltrans®
WATER QUALITY

SENIOR LANDSCAPE ARCHITECT: DAVID W. YAM

CALCULATED-DESIGNED BY: SALLY BANG
CHECKED BY:

REVISED BY: AK
DATE REVISED: 3/9/10

LAST REVISION 03-10-10 | DATE PLOTTED => 16-JUN-2010 | TIME PLOTTED => 09:50

Dist	COUNTY	ROUTE	POST MILES TOTAL PROJECT	SHEET No.	TOTAL SHEETS
04	Mrn	1	15.0/17.0	13	50

Charlotte A. Cashin 3-11-10
REGISTERED CIVIL ENGINEER DATE

6-14-10
PLANS APPROVAL DATE

REGISTERED PROFESSIONAL ENGINEER
Charlotte A. Cashin
No. 34417
Exp. 9-30-11
CIVIL
STATE OF CALIFORNIA

THE STATE OF CALIFORNIA OR ITS OFFICERS OR AGENTS SHALL NOT BE RESPONSIBLE FOR THE ACCURACY OR COMPLETENESS OF SCANNED COPIES OF THIS PLAN SHEET.

FOR ACCURATE RIGHT OF WAY DATA,
CONTACT RIGHT OF WAY ENGINEERING
AT THE DISTRICT OFFICE.

NOTES:

1. SEE WPCD-1 FOR FOR TEMPORARY GRAVEL BAG BERM PLACEMENT.
2. AVOID IMPACTS TO EXISTING VEGETATION, OR AS DIRECTED BY ENGINEER.

LEGEND:

(No.)	DRAINAGE SYSTEM NUMBER
(a)	DRAINAGE UNIT
— xx — TRSF —	Temp REINFORCED SILT FENCE (TYPE 1)

ABBREVIATIONS:

CMPA	CORRUGATED METAL PIPE ARCH
TCP	TERRA COTTA PIPE
TRSF	TEMPORARY REINFORCED SILT FENCE

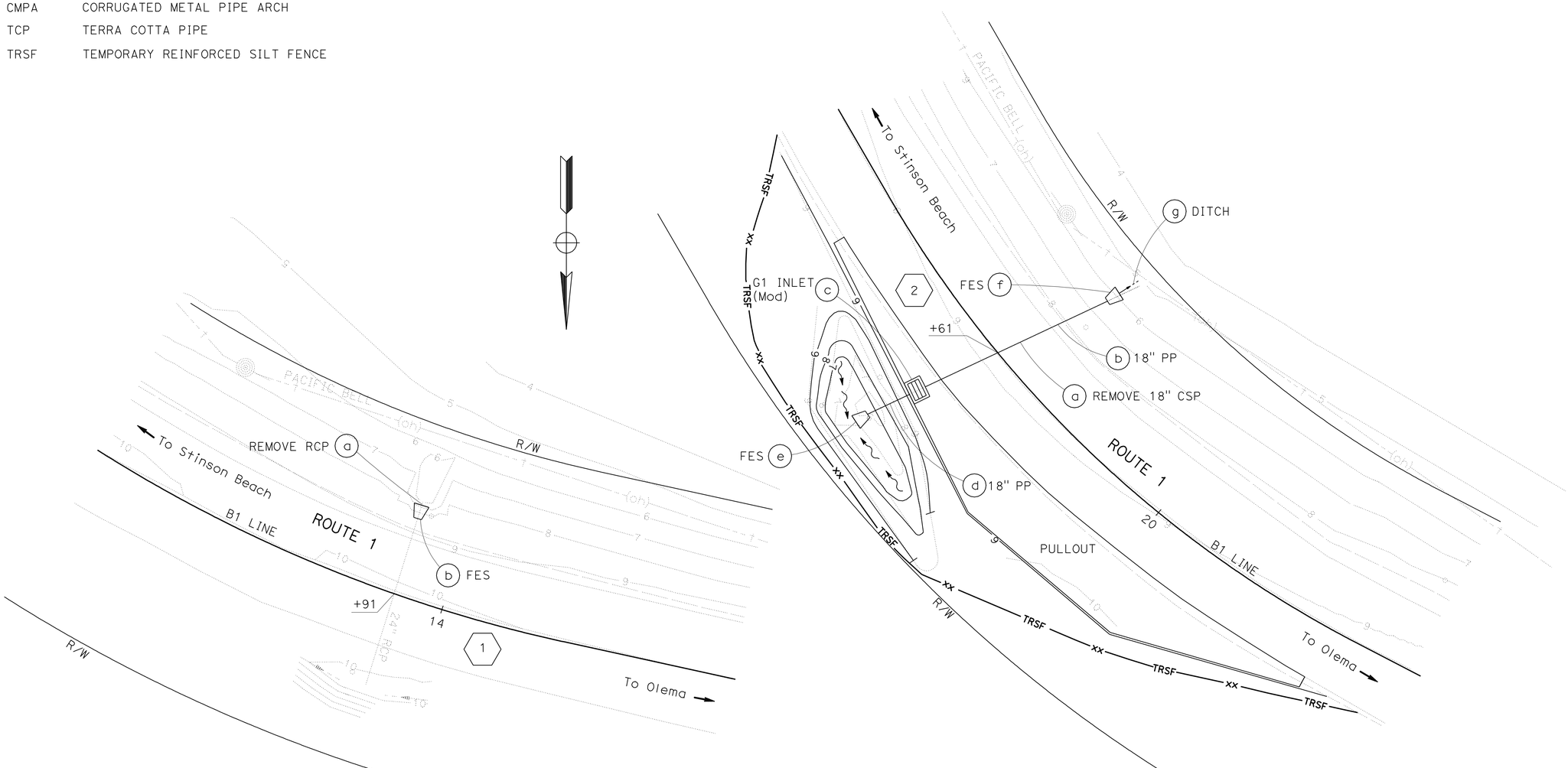

LOCATION 1
PM 15.05

LOCATION 2
PM 15.15

THIS PLAN ACCURATE FOR
DRAINAGE WORK ONLY.

DRAINAGE PLAN

SCALE: 1" = 10'

D-1

STATE OF CALIFORNIA - DEPARTMENT OF TRANSPORTATION
Caltrans
HYDRAULICS

FUNCTIONAL SUPERVISOR: JOSEPH PETERSON
CALCULATED-DESIGNED BY: CHARLOTTE CASHIN
CHECKED BY: JOSEPH PETERSON
REVISED BY: CC
DATE REVISED: 3/9/10

LAST REVISION 03-10-10 | DATE PLOTTED => 16-JUN-2010 | TIME PLOTTED => 09:50

BORDER LAST REVISED 4/11/2008 | RELATIVE BORDER SCALE IS IN INCHES 0 1 2 3 | USERNAME => trmartin | DGN FILE => 44s540ia001.dgn | CU 04224 | EA 4S5401

Dist	COUNTY	ROUTE	POST MILES TOTAL PROJECT	SHEET No.	TOTAL SHEETS
04	Mrn	1	15.0/17.0	14	50

Charlotte A. Cashin 3-11-10
REGISTERED CIVIL ENGINEER DATE

6-14-10
PLANS APPROVAL DATE

REGISTERED PROFESSIONAL ENGINEER
Charlotte A. Cashin
No. 34417
Exp. 9-30-11
CIVIL
STATE OF CALIFORNIA

THE STATE OF CALIFORNIA OR ITS OFFICERS OR AGENTS SHALL NOT BE RESPONSIBLE FOR THE ACCURACY OR COMPLETENESS OF SCANNED COPIES OF THIS PLAN SHEET.

FOR ACCURATE RIGHT OF WAY DATA,
CONTACT RIGHT OF WAY ENGINEERING
AT THE DISTRICT OFFICE.

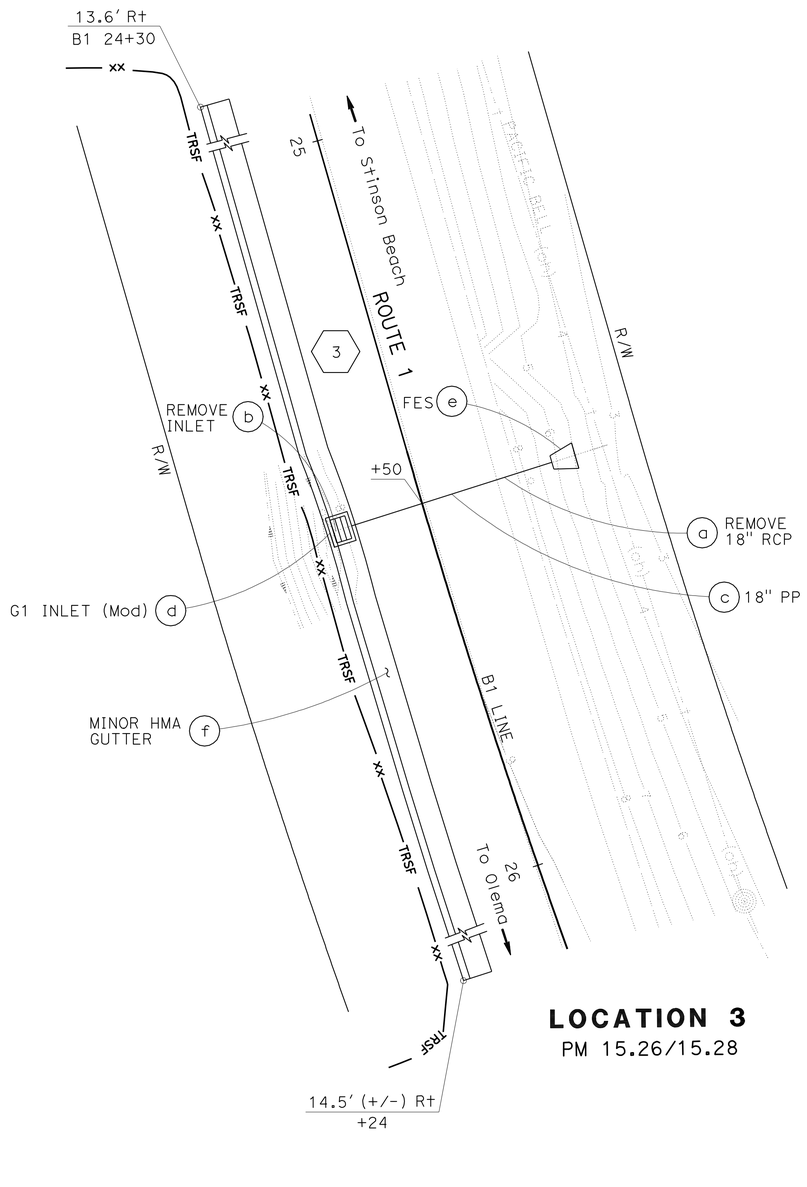

LOCATION 3
PM 15.26/15.28

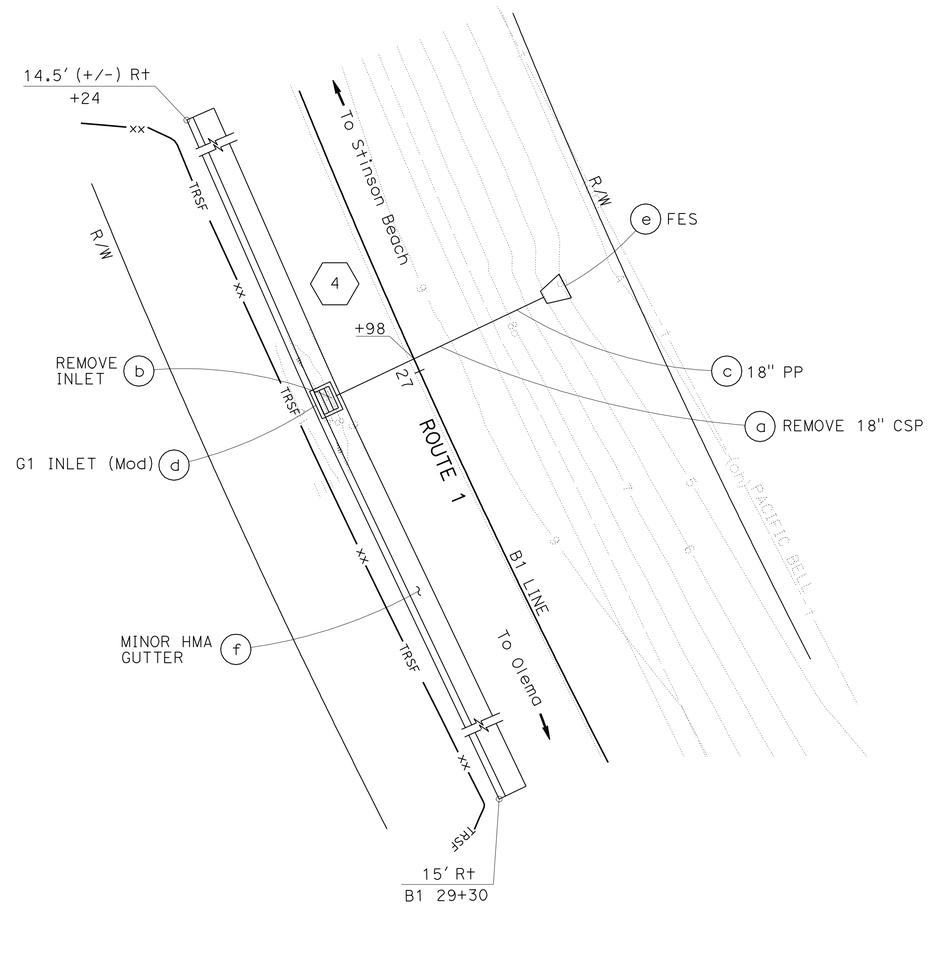

LOCATION 4
PM 15.30

FOR NOTES, ABBREVIATIONS AND LEGEND, SEE SHEET D-1

THIS PLAN ACCURATE FOR DRAINAGE WORK ONLY.

DRAINAGE PLAN

SCALE: 1" = 10'

D-2

REVISED BY	DATE REVISED
CC	3/9/10

CALCULATED-DESIGNED BY: CHARLOTTE CASHIN
CHECKED BY: JOSEPH PETERSON
FUNCTIONAL SUPERVISOR: JOSEPH PETERSON

STATE OF CALIFORNIA - DEPARTMENT OF TRANSPORTATION
Caltrans®
HYDRAULICS

LAST REVISION 03-10-10
DATE PLOTTED => 16-JUN-2010
TIME PLOTTED => 09:50

Dist	COUNTY	ROUTE	POST MILES TOTAL PROJECT	SHEET No.	TOTAL SHEETS
04	Mrn	1	15.0/17.0	15	50

Charlotte A. Cashin 3-11-10
REGISTERED CIVIL ENGINEER DATE

6-14-10
PLANS APPROVAL DATE

REGISTERED PROFESSIONAL ENGINEER
Charlotte A. Cashin
No. 34417
Exp. 9-30-11
CIVIL
STATE OF CALIFORNIA

THE STATE OF CALIFORNIA OR ITS OFFICERS OR AGENTS SHALL NOT BE RESPONSIBLE FOR THE ACCURACY OR COMPLETENESS OF SCANNED COPIES OF THIS PLAN SHEET.

FOR ACCURATE RIGHT OF WAY DATA,
CONTACT RIGHT OF WAY ENGINEERING
AT THE DISTRICT OFFICE.

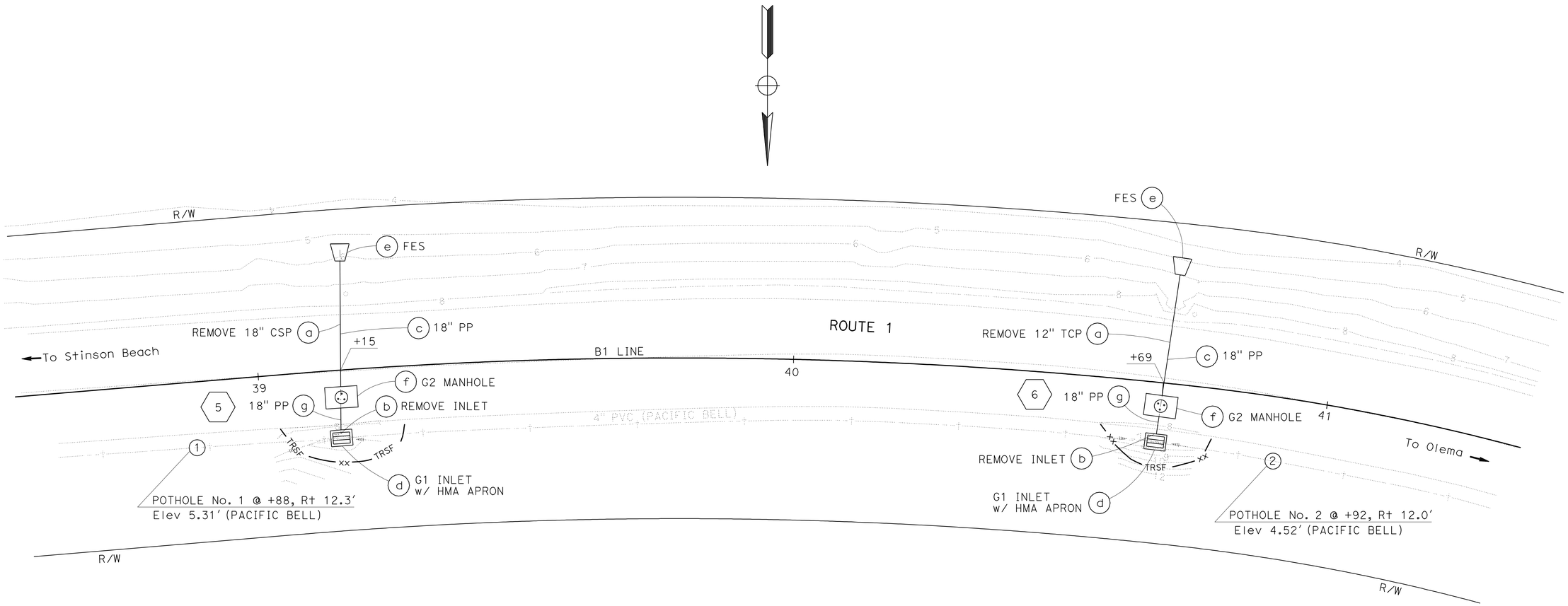

LOCATION 5
PM 15.53

LOCATION 6
PM 15.56

FOR NOTES, ABBREVIATIONS AND LEGEND, SEE SHEET D-1

THIS PLAN ACCURATE FOR DRAINAGE WORK ONLY.

DRAINAGE PLAN

SCALE: 1" = 10'

D-3

REVISED BY	DATE REVISED
CC	3/9/10

CALCULATED-DESIGNED BY: CHARLOTTE CASHIN
CHECKED BY: JOSEPH PETERSON
FUNCTIONAL SUPERVISOR: JOSEPH PETERSON

STATE OF CALIFORNIA - DEPARTMENT OF TRANSPORTATION
Caltrans
HYDRAULICS

LAST REVISION 03-10-10 | DATE PLOTTED => 16-JUN-2010 | TIME PLOTTED => 09:50

Dist	COUNTY	ROUTE	POST MILES TOTAL PROJECT	SHEET No.	TOTAL SHEETS
04	Mrn	1	15.0/17.0	16	50

Charlotte A. Cashin 3-11-10
REGISTERED CIVIL ENGINEER DATE

6-14-10
PLANS APPROVAL DATE

REGISTERED PROFESSIONAL ENGINEER
Charlotte A. Cashin
No. 34417
Exp. 9-30-11
CIVIL
STATE OF CALIFORNIA

THE STATE OF CALIFORNIA OR ITS OFFICERS OR AGENTS SHALL NOT BE RESPONSIBLE FOR THE ACCURACY OR COMPLETENESS OF SCANNED COPIES OF THIS PLAN SHEET.

FOR ACCURATE RIGHT OF WAY DATA,
CONTACT RIGHT OF WAY ENGINEERING
AT THE DISTRICT OFFICE.

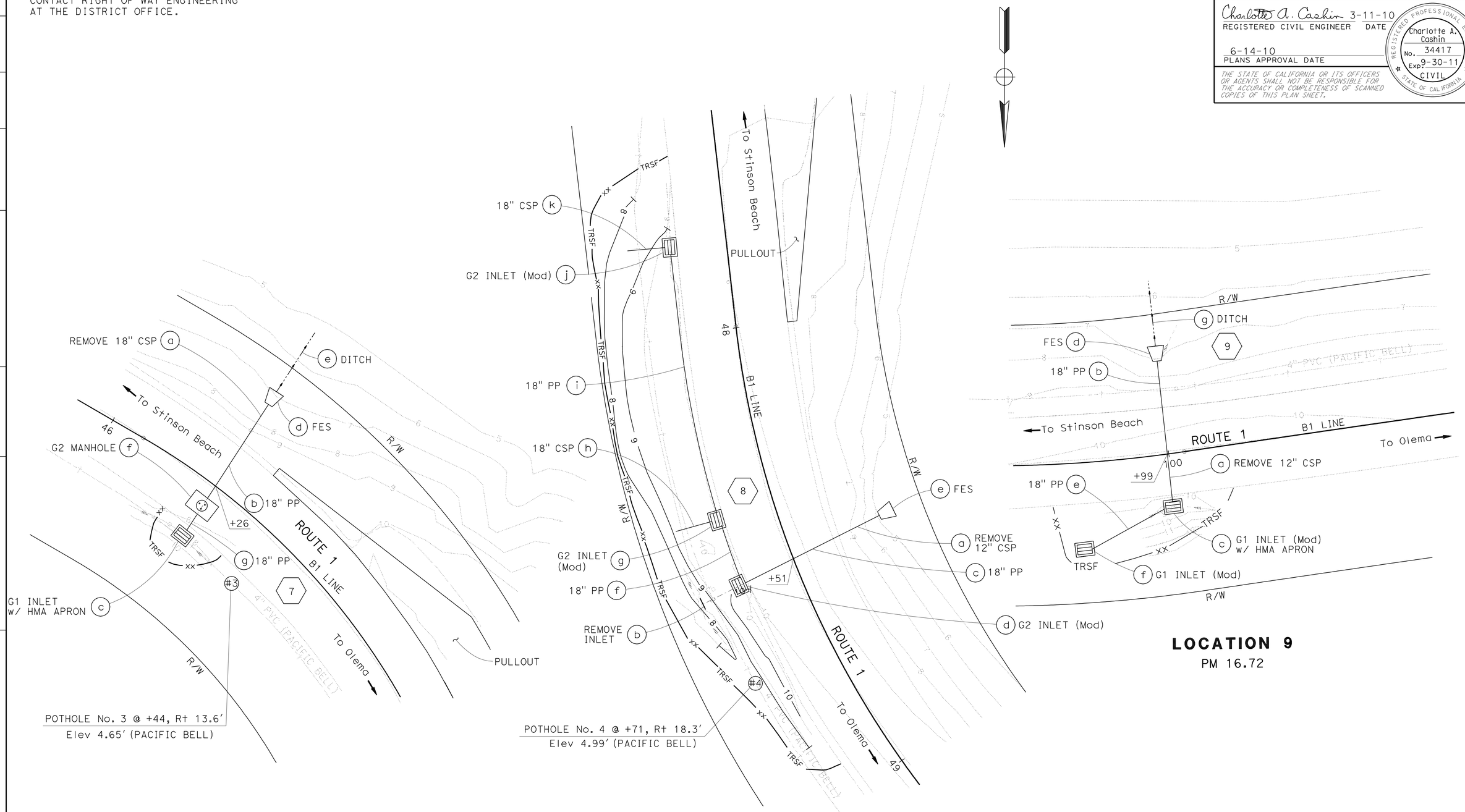

LOCATION 7
PM 15.67

LOCATION 8
PM 15.71

LOCATION 9
PM 16.72

FOR NOTES, ABBREVIATIONS AND LEGEND, SEE SHEET D-1

THIS PLAN ACCURATE FOR DRAINAGE WORK ONLY

DRAINAGE PLAN
SCALE: 1" = 10'

D-4

STATE OF CALIFORNIA - DEPARTMENT OF TRANSPORTATION
Caltrans
HYDRAULICS

FUNCTIONAL SUPERVISOR: JOSEPH PETERSON

CALCULATED-DESIGNED BY: CHARLOTTE CASHIN
CHECKED BY: JOSEPH PETERSON

REVISED BY: CC
DATE REVISED: 3/9/10

LAST REVISION 03-10-10
DATE PLOTTED => 17-JUN-2010
TIME PLOTTED => 95:46

BORDER LAST REVISED 4/11/2008
RELATIVE BORDER SCALE IS IN INCHES 0 1 2 3
USERNAME => trmikesl
DGN FILE => 44s540ia004.dgn
CU 04224
EA 4S5401

Dist	COUNTY	ROUTE	POST MILES TOTAL PROJECT	SHEET No.	TOTAL SHEETS
04	Mrn	1	15.0/17.0	17	50

Charlotte A. Cashin 3-11-10
REGISTERED CIVIL ENGINEER DATE

6-14-10
PLANS APPROVAL DATE

REGISTERED PROFESSIONAL ENGINEER
Charlotte A. Cashin
No. 34417
Exp. 9-30-11
CIVIL
STATE OF CALIFORNIA

THE STATE OF CALIFORNIA OR ITS OFFICERS OR AGENTS SHALL NOT BE RESPONSIBLE FOR THE ACCURACY OR COMPLETENESS OF SCANNED COPIES OF THIS PLAN SHEET.

FOR ACCURATE RIGHT OF WAY DATA,
CONTACT RIGHT OF WAY ENGINEERING
AT THE DISTRICT OFFICE.

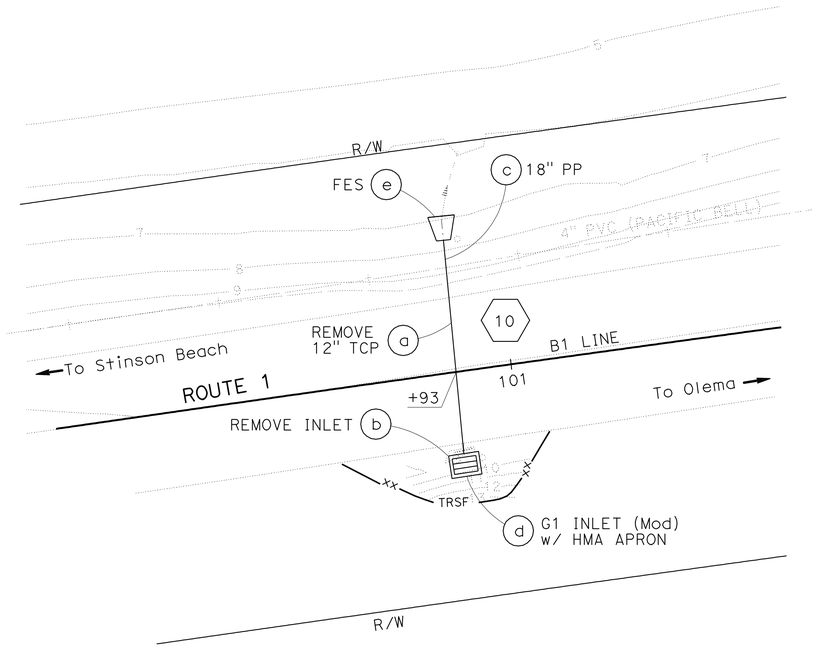

LOCATION 10
PM 16.74

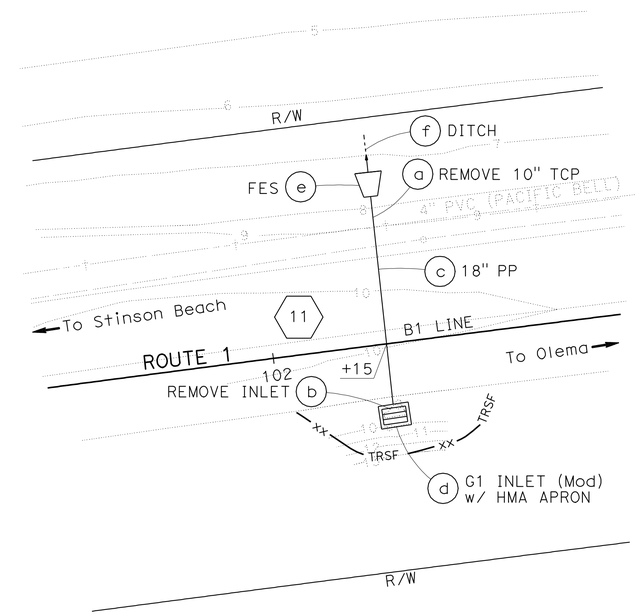

LOCATION 11
PM 16.76

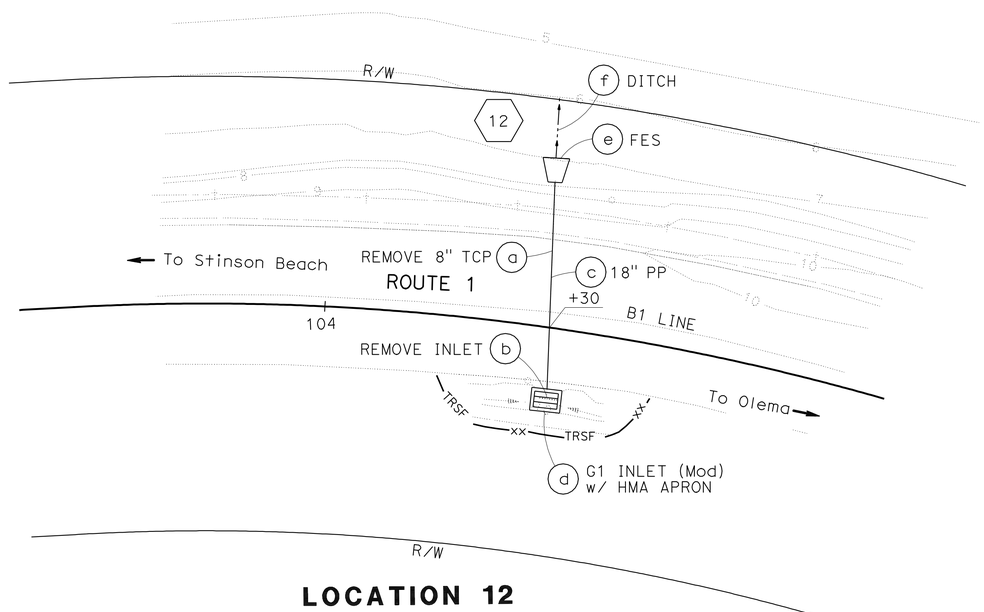

LOCATION 12
PM 16.80

FOR NOTES, ABBREVIATIONS
AND LEGEND, SEE SHEET D-1

THIS PLAN ACCURATE FOR
DRAINAGE WORK ONLY

DRAINAGE PLAN
SCALE: 1" = 10'

D-5

REVISED BY	DATE REVISED
CC	3/9/10

CALCULATED-DESIGNED BY: CHARLOTTE CASHIN
CHECKED BY: JOSEPH PETERSON
FUNCTIONAL SUPERVISOR: JOSEPH PETERSON

STATE OF CALIFORNIA - DEPARTMENT OF TRANSPORTATION
Caltrans
HYDRAULICS

LAST REVISION 03-10-10 | DATE PLOTTED => 16-JUN-2010 | TIME PLOTTED => 13:37

Dist	COUNTY	ROUTE	POST MILES TOTAL PROJECT	SHEET No.	TOTAL SHEETS
04	Mrn	1	15.0/17.0	18	50

Charlotte A. Cashin 3-11-10
REGISTERED CIVIL ENGINEER DATE

6-14-10
PLANS APPROVAL DATE

REGISTERED PROFESSIONAL ENGINEER
Charlotte A. Cashin
No. 34417
Exp. 9-30-11
CIVIL
STATE OF CALIFORNIA

THE STATE OF CALIFORNIA OR ITS OFFICERS OR AGENTS SHALL NOT BE RESPONSIBLE FOR THE ACCURACY OR COMPLETENESS OF SCANNED COPIES OF THIS PLAN SHEET.

FOR ACCURATE RIGHT OF WAY DATA,
CONTACT RIGHT OF WAY ENGINEERING
AT THE DISTRICT OFFICE.

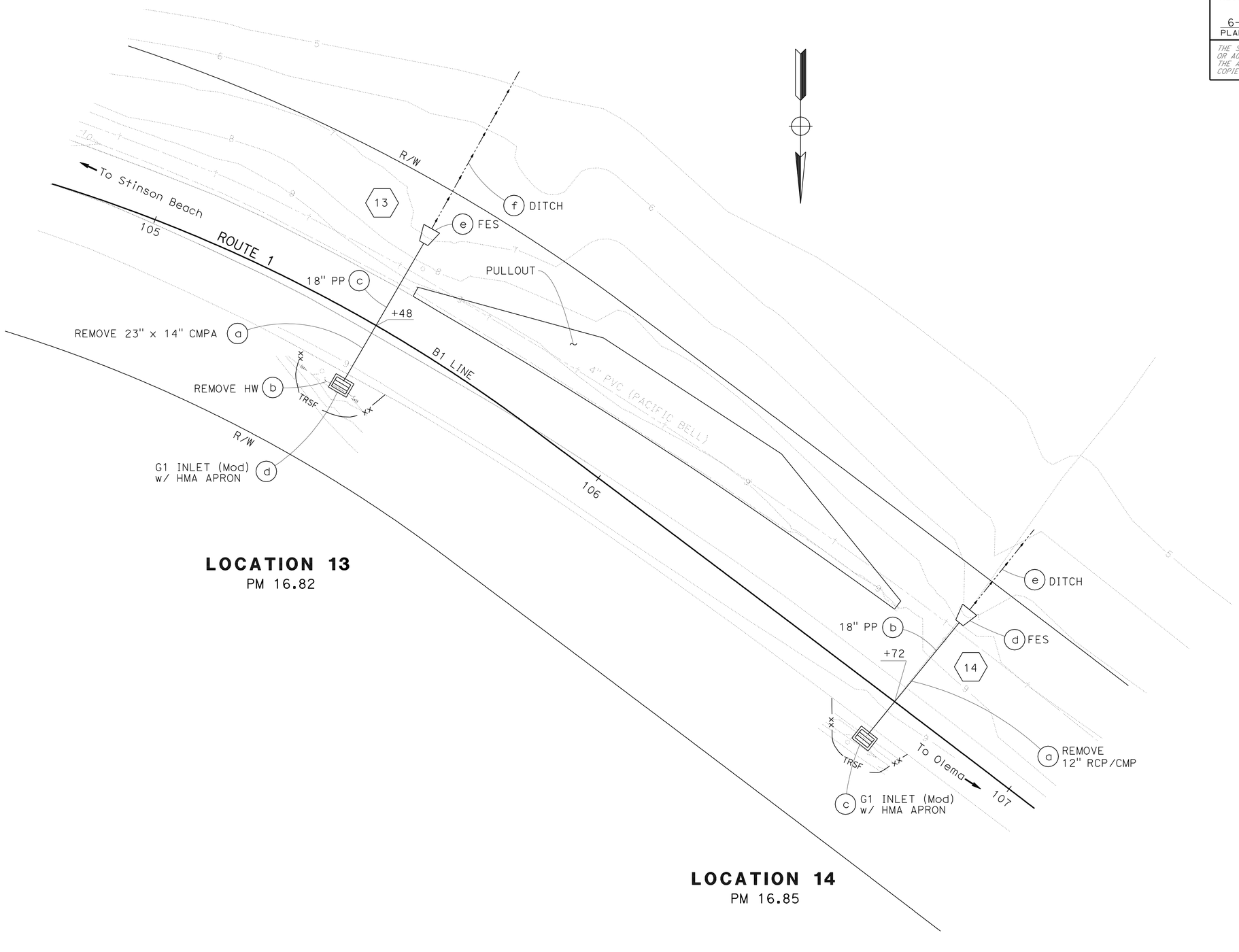

LOCATION 13
PM 16.82

LOCATION 14
PM 16.85

FOR NOTES, ABBREVIATIONS
AND LEGEND, SEE SHEET D-1

THIS PLAN ACCURATE FOR
DRAINAGE WORK ONLY

DRAINAGE PLAN
SCALE: 1" = 10'

D-6

STATE OF CALIFORNIA - DEPARTMENT OF TRANSPORTATION
Caltrans
HYDRAULICS

FUNCTIONAL SUPERVISOR: JOSEPH PETERSON
CALCULATED-DESIGNED BY: CHARLOTTE CASHIN
CHECKED BY: JOSEPH PETERSON
REVISED BY: CC
DATE REVISED: 3/9/10

LAST REVISION 03-10-10
DATE PLOTTED => 16-JUN-2010
TIME PLOTTED => 13:37

Dist	COUNTY	ROUTE	POST MILES TOTAL PROJECT	SHEET No.	TOTAL SHEETS
04	Mrn	1	15.0/17.0	19	50

Peter Aguilera 3-11-10
REGISTERED CIVIL ENGINEER DATE

6-14-10
PLANS APPROVAL DATE

REGISTERED PROFESSIONAL ENGINEER
Peter Aguilera
No. 55287
Exp. 12-31-10
CIVIL
STATE OF CALIFORNIA

THE STATE OF CALIFORNIA OR ITS OFFICERS OR AGENTS SHALL NOT BE RESPONSIBLE FOR THE ACCURACY OR COMPLETENESS OF SCANNED COPIES OF THIS PLAN SHEET.

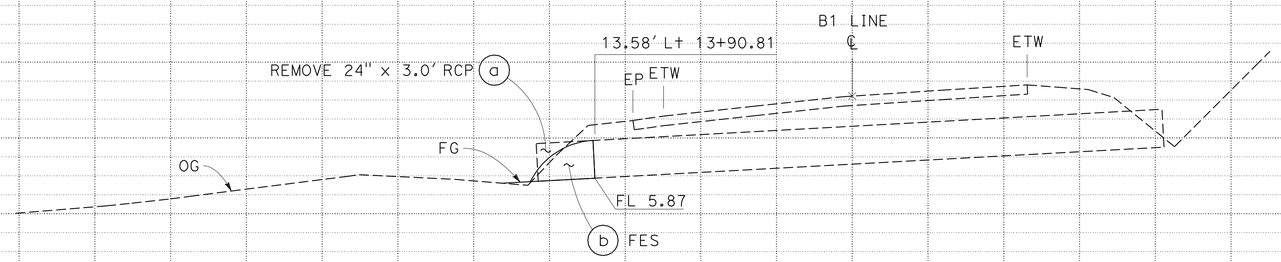

DRAINAGE SYSTEM No. 1
(PM 15.05)

NOTES:

1. RSP NOT SHOWN.
2. FOR TRENCH BACKFILL AND PAVING, SEE SHEET DD-1.

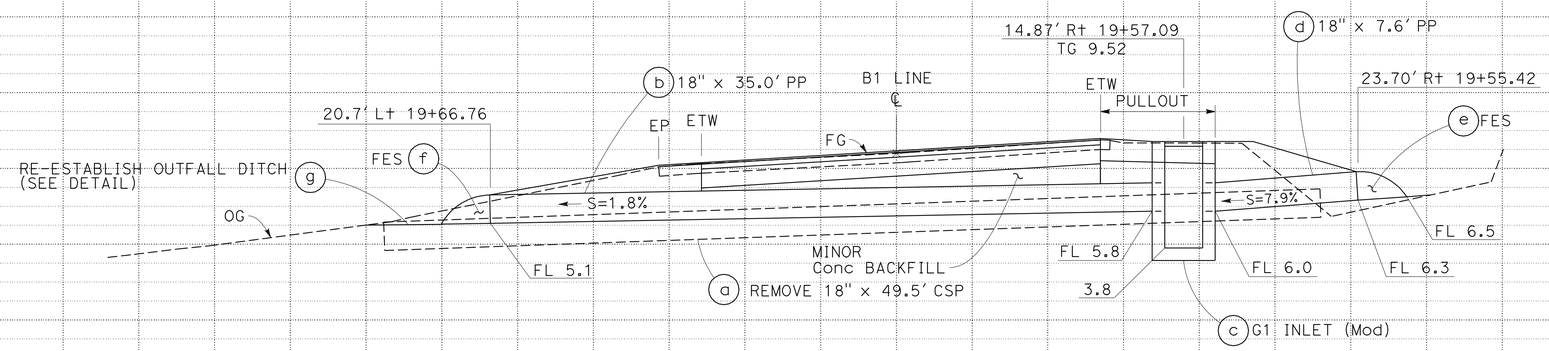

DRAINAGE SYSTEM No. 2
(PM 15.15)

DRAINAGE PROFILES

SCALE: Horiz 1" = 4'
Vert 1" = 4'

DP-1

STATE OF CALIFORNIA - DEPARTMENT OF TRANSPORTATION
Caltrans
DESIGN

FUNCTIONAL SUPERVISOR: ARLISSA PANG
CALCULATED-DESIGNED BY: SUSANA OÑATE
CHECKED BY: PETER AGUILERA
REVISED BY: SO
DATE REVISED: 3/9/10

LAST REVISION 05-13-10 | DATE PLOTTED => 17-JUN-2010 | TIME PLOTTED => 05:52

Dist	COUNTY	ROUTE	POST MILES TOTAL PROJECT	SHEET No.	TOTAL SHEETS
04	Mrn	1	15.0/17.0	20	50

Peter Aguilera 3-11-10
REGISTERED CIVIL ENGINEER DATE

6-14-10
PLANS APPROVAL DATE

REGISTERED PROFESSIONAL ENGINEER Peter Aguilera No. 55287 Exp. 12-31-10 CIVIL STATE OF CALIFORNIA

THE STATE OF CALIFORNIA OR ITS OFFICERS OR AGENTS SHALL NOT BE RESPONSIBLE FOR THE ACCURACY OR COMPLETENESS OF SCANNED COPIES OF THIS PLAN SHEET.

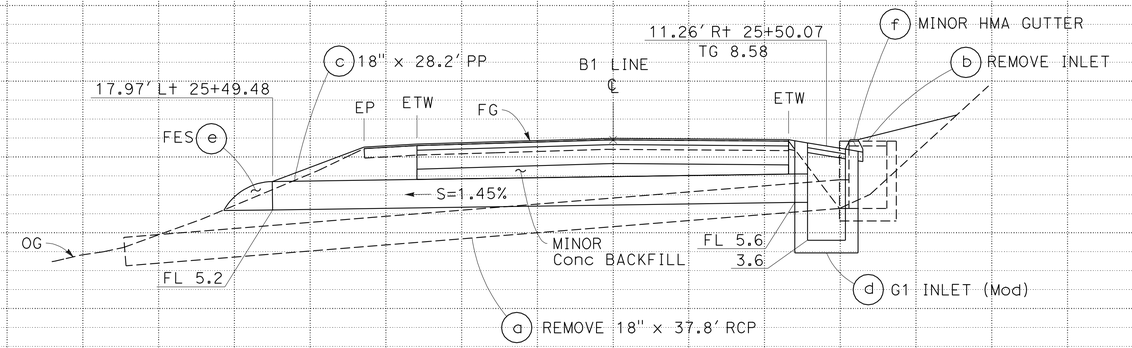

DRAINAGE SYSTEM No. 3
(PM 15.26/15.28)

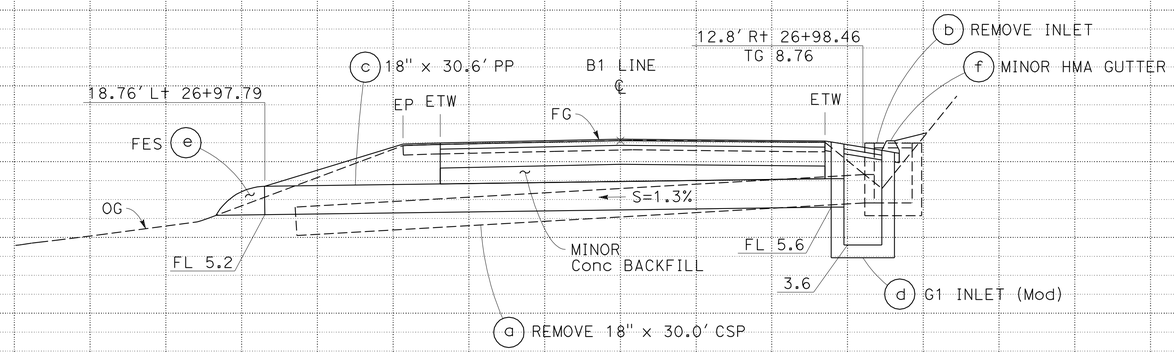

DRAINAGE SYSTEM No. 4
(PM 15.30)

DRAINAGE PROFILES

SCALE: Horiz 1" = 4'
Vert 1" = 4'

DP-2

STATE OF CALIFORNIA - DEPARTMENT OF TRANSPORTATION
Caltrans® DESIGN

FUNCTIONAL SUPERVISOR: ARLISSA PANG
CALCULATED-DESIGNED BY: PETER AGUILERA
CHECKED BY: SUSANA OÑATE
REVISED BY: SO
DATE REVISED: 3/9/10

LAST REVISION 05-13-10 | DATE PLOTTED => 17-JUN-2010 | TIME PLOTTED => 05:53

Dist	COUNTY	ROUTE	POST MILES TOTAL PROJECT	SHEET No.	TOTAL SHEETS
04	Mrn	1	15.0/17.0	21	50

Peter Aguilera 3-11-10
REGISTERED CIVIL ENGINEER DATE

6-14-10
PLANS APPROVAL DATE

REGISTERED PROFESSIONAL ENGINEER Peter Aguilera No. 55287 Exp. 12-31-10 CIVIL STATE OF CALIFORNIA

THE STATE OF CALIFORNIA OR ITS OFFICERS OR AGENTS SHALL NOT BE RESPONSIBLE FOR THE ACCURACY OR COMPLETENESS OF SCANNED COPIES OF THIS PLAN SHEET.

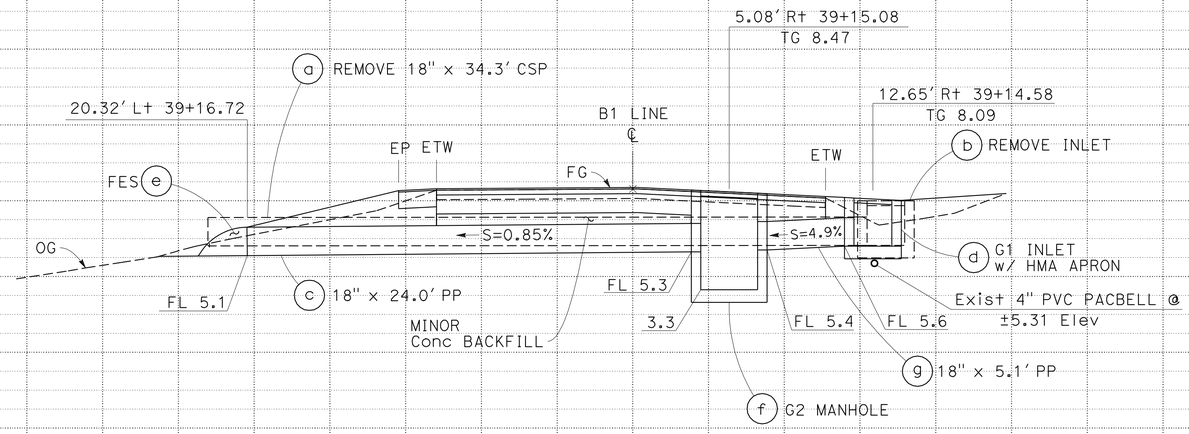

DRAINAGE SYSTEM No. 5
(PM 15.53)

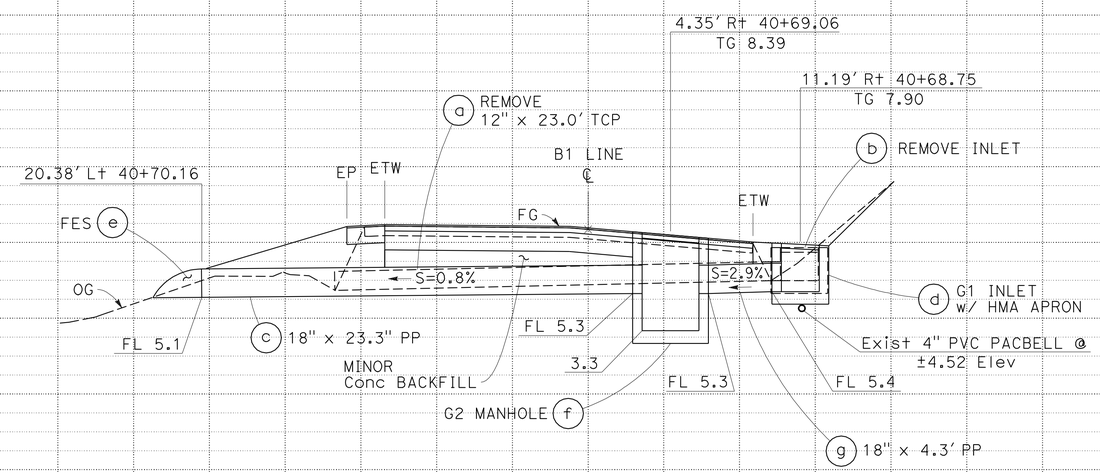

DRAINAGE SYSTEM No. 6
(PM 15.56)

DRAINAGE PROFILES

SCALE: Horiz 1" = 4'
Vert 1" = 4'

DP-3

REVISED BY	DATE REVISED
SO	3/9/10

SUSANA OÑATE — PETER AGUILERA — CALCULATED-DESIGNED BY — CHECKED BY

FUNCTIONAL SUPERVISOR: ARLISSA PANG

STATE OF CALIFORNIA - DEPARTMENT OF TRANSPORTATION
Caltrans DESIGN

LAST REVISION 05-13-10 | DATE PLOTTED => 17-JUN-2010 | TIME PLOTTED => 05:53

Dist	COUNTY	ROUTE	POST MILES TOTAL PROJECT	SHEET No.	TOTAL SHEETS
04	Mrn	1	15.0/17.0	22	50

Peter Aguilera 3-11-10
REGISTERED CIVIL ENGINEER DATE

6-14-10
PLANS APPROVAL DATE

REGISTERED PROFESSIONAL ENGINEER Peter Aguilera No. 55287 Exp. 12-31-10 CIVIL STATE OF CALIFORNIA

THE STATE OF CALIFORNIA OR ITS OFFICERS OR AGENTS SHALL NOT BE RESPONSIBLE FOR THE ACCURACY OR COMPLETENESS OF SCANNED COPIES OF THIS PLAN SHEET.

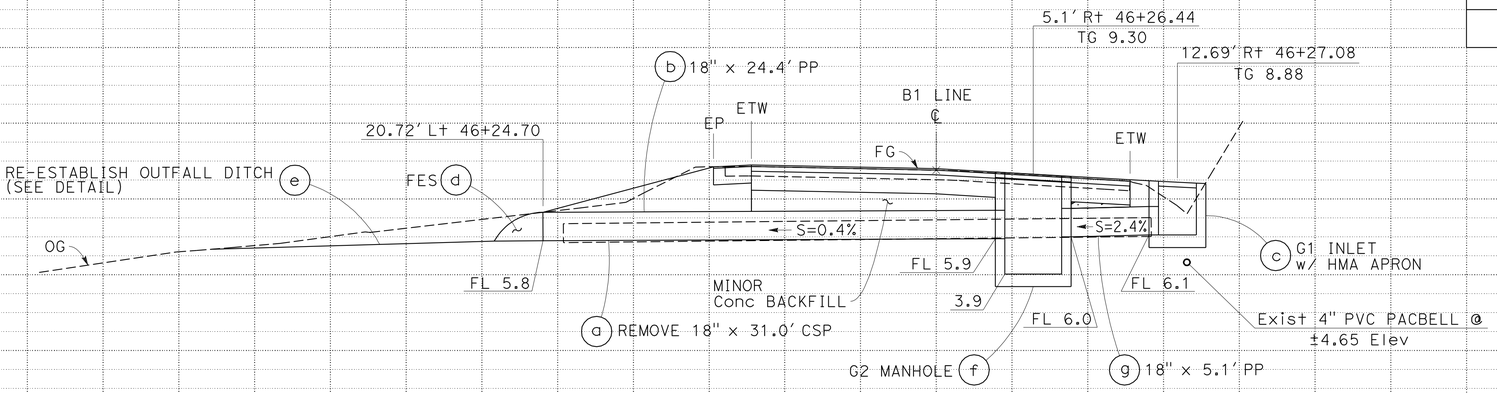

DRAINAGE SYSTEM No. 7
(PM 15.67)

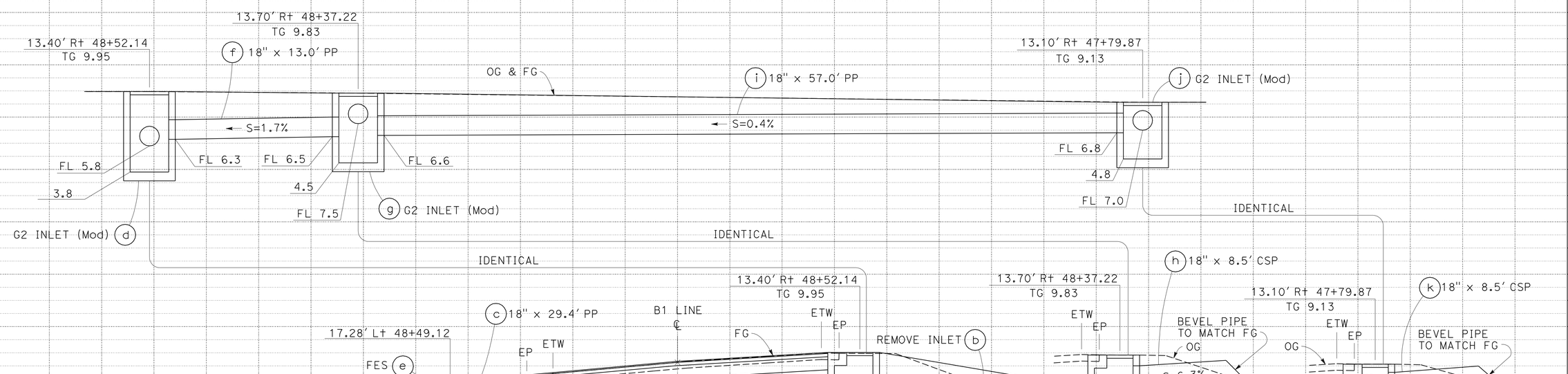

DRAINAGE SYSTEM No. 8
(PM 15.71)

DRAINAGE PROFILES

SCALE: Horiz 1" = 4'
Vert 1" = 4'

DP-4

REVISED BY	DATE REVISED
SO	3/9/10

CALCULATED-DESIGNED BY: SUSANA OÑATE
CHECKED BY: PETER AGUILERA
FUNCTIONAL SUPERVISOR: ARLISSA PANG

STATE OF CALIFORNIA - DEPARTMENT OF TRANSPORTATION
Caltrans DESIGN

LAST REVISION 05-13-10
DATE PLOTTED => 17-JUN-2010
TIME PLOTTED => 05:53

Dist	COUNTY	ROUTE	POST MILES TOTAL PROJECT	SHEET No.	TOTAL SHEETS
04	Mrn	1	15.0/17.0	23	50

Petey Aguilera 3-11-10
REGISTERED CIVIL ENGINEER DATE

6-14-10
PLANS APPROVAL DATE

REGISTERED PROFESSIONAL ENGINEER
Peter Aguilera
No. 55287
Exp. 12-31-10
CIVIL
STATE OF CALIFORNIA

THE STATE OF CALIFORNIA OR ITS OFFICERS OR AGENTS SHALL NOT BE RESPONSIBLE FOR THE ACCURACY OR COMPLETENESS OF SCANNED COPIES OF THIS PLAN SHEET.

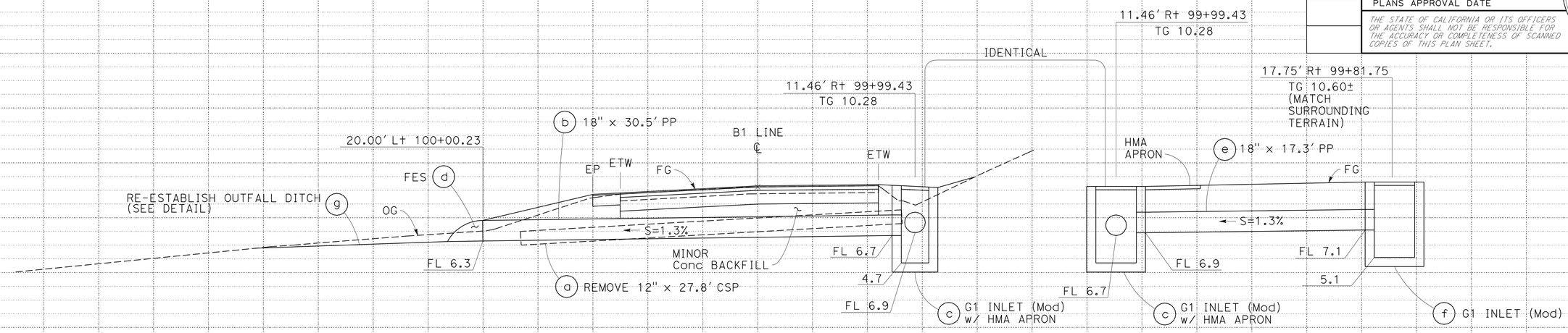

DRAINAGE SYSTEM No. 9
(PM 16.72)

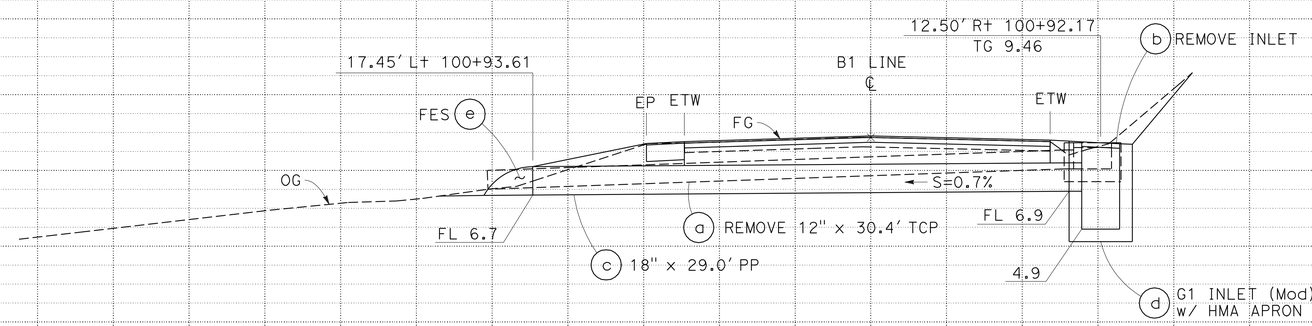

DRAINAGE SYSTEM No. 10
(PM 16.74)

DRAINAGE PROFILES

SCALE: Horiz 1" = 4'
Vert 1" = 4'

DP-5

STATE OF CALIFORNIA - DEPARTMENT OF TRANSPORTATION
Caltrans® DESIGN

FUNCTIONAL SUPERVISOR: ARLISSA PANG
CALCULATED-DESIGNED BY: PETER AGUILERA
CHECKED BY: SUSANA OÑATE
REVISED BY: SO
DATE REVISED: 3/9/10

LAST REVISION 05-13-10 | DATE PLOTTED => 17-JUN-2010 | TIME PLOTTED => 05:56

Dist	COUNTY	ROUTE	POST MILES TOTAL PROJECT	SHEET No.	TOTAL SHEETS
04	Mrn	1	15.0/17.0	24	50

Petey Aguilera 3-11-10
REGISTERED CIVIL ENGINEER DATE

6-14-10
PLANS APPROVAL DATE

REGISTERED PROFESSIONAL ENGINEER
Peter Aguilera
No. 55287
Exp. 12-31-10
CIVIL
STATE OF CALIFORNIA

THE STATE OF CALIFORNIA OR ITS OFFICERS OR AGENTS SHALL NOT BE RESPONSIBLE FOR THE ACCURACY OR COMPLETENESS OF SCANNED COPIES OF THIS PLAN SHEET.

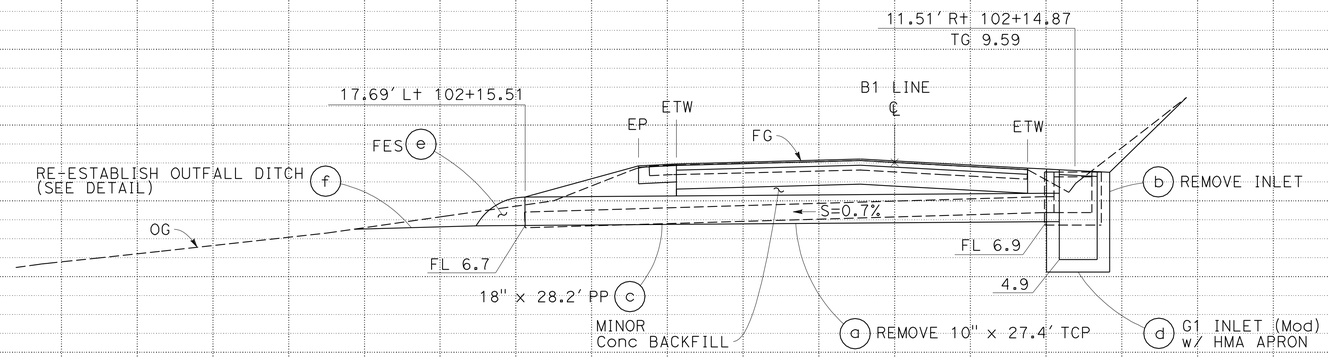

DRAINAGE SYSTEM No. 11
(PM 16.76)

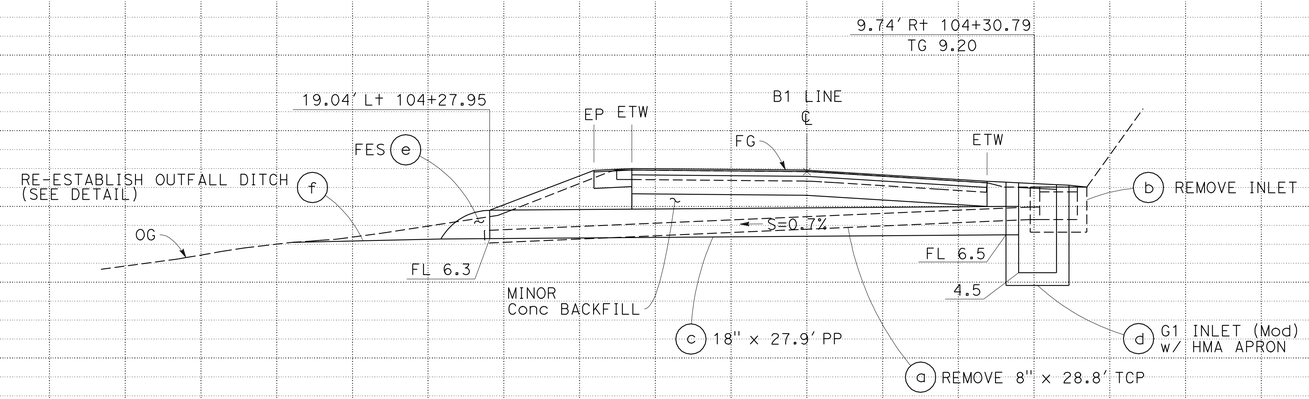

DRAINAGE SYSTEM No. 12
(PM 16.80)

DRAINAGE PROFILES

SCALE: Horiz 1" = 4'
Vert 1" = 4'

DP-6

REVISED BY	DATE REVISED
SO	3/9/10

SUSANA OÑATE — PETER AGUILERA — CALCULATED-DESIGNED BY — CHECKED BY

FUNCTIONAL SUPERVISOR: ARLISSA PANG

STATE OF CALIFORNIA - DEPARTMENT OF TRANSPORTATION
Caltrans® DESIGN

LAST REVISION 05-13-10 | DATE PLOTTED => 16-JUN-2010 | TIME PLOTTED => 13:29

Dist	COUNTY	ROUTE	POST MILES TOTAL PROJECT	SHEET No.	TOTAL SHEETS
04	Mrn	1	15.0/17.0	25	50

Petey Aguilera 3-11-10
REGISTERED CIVIL ENGINEER DATE

6-14-10
PLANS APPROVAL DATE

REGISTERED PROFESSIONAL ENGINEER
Peter Aguilera
No. 55287
Exp. 12-31-10
CIVIL
STATE OF CALIFORNIA

THE STATE OF CALIFORNIA OR ITS OFFICERS OR AGENTS SHALL NOT BE RESPONSIBLE FOR THE ACCURACY OR COMPLETENESS OF SCANNED COPIES OF THIS PLAN SHEET.

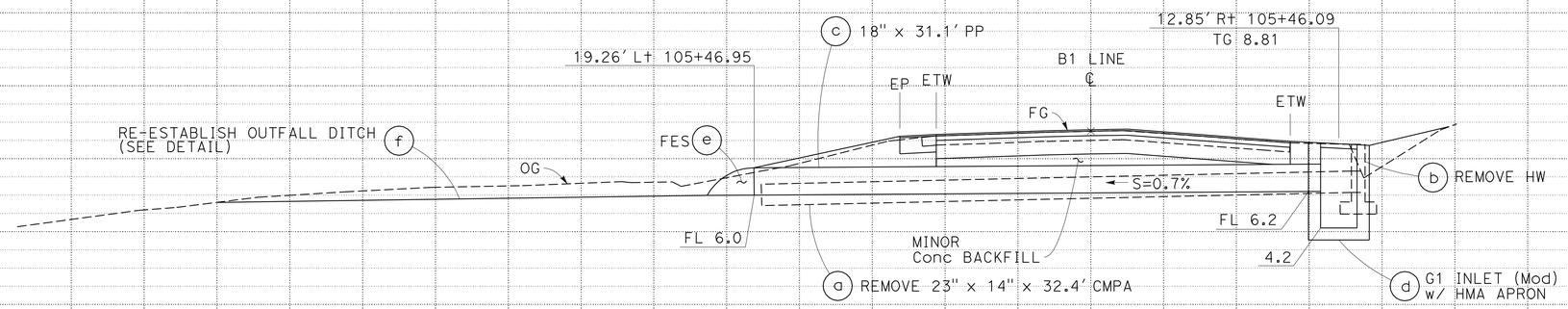

DRAINAGE SYSTEM No. 13
(PM 16.82)

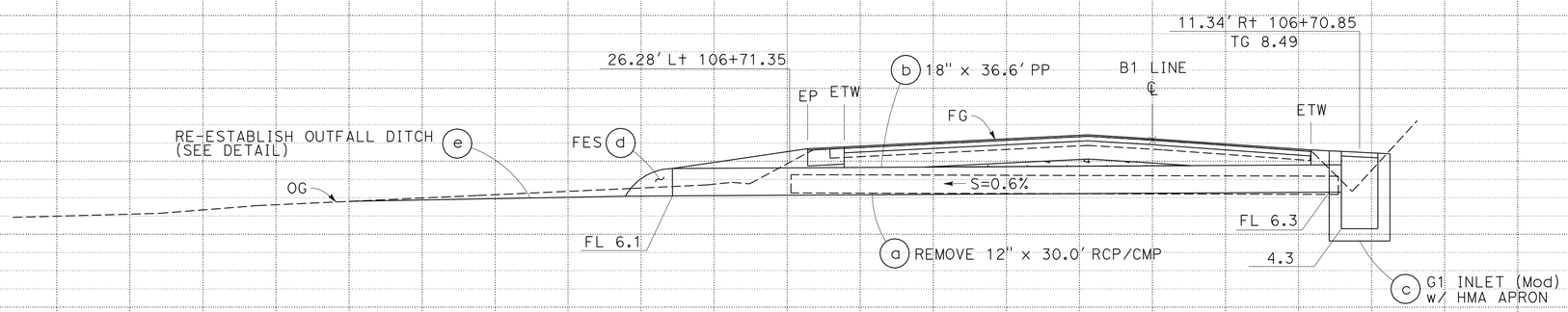

DRAINAGE SYSTEM No. 14
(PM 16.85)

DRAINAGE PROFILES

SCALE: Horiz 1" = 4'
Vert 1" = 4'

DP-7

REVISED BY	DATE REVISED
SO	3/9/10

SUSANA OÑATE — PETER AGUILERA

CALCULATED-DESIGNED BY — CHECKED BY

FUNCTIONAL SUPERVISOR: ARLISSA PANG

STATE OF CALIFORNIA - DEPARTMENT OF TRANSPORTATION
Caltrans DESIGN

LAST REVISION 05-13-10 | DATE PLOTTED => 16-JUN-2010 | TIME PLOTTED => 13:29

Dist	COUNTY	ROUTE	POST MILES TOTAL PROJECT	SHEET No.	TOTAL SHEETS
04	Mrn	1	15.0/17.0	26	50

Charlotte A. Cashin 3-11-10
REGISTERED CIVIL ENGINEER DATE

6-14-10
PLANS APPROVAL DATE

REGISTERED PROFESSIONAL ENGINEER
Charlotte A. Cashin
No. 34417
Exp. 9-30-11
CIVIL
STATE OF CALIFORNIA

THE STATE OF CALIFORNIA OR ITS OFFICERS OR AGENTS SHALL NOT BE RESPONSIBLE FOR THE ACCURACY OR COMPLETENESS OF SCANNED COPIES OF THIS PLAN SHEET.

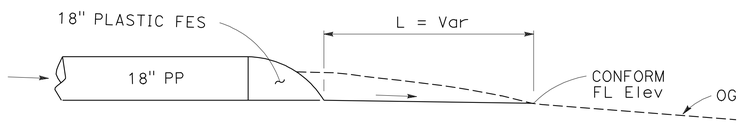

PROFILE

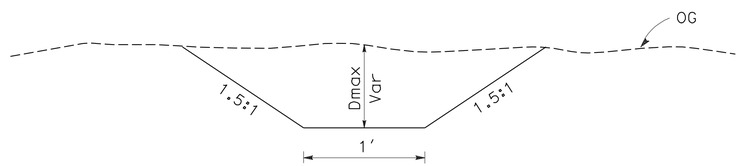

SECTION

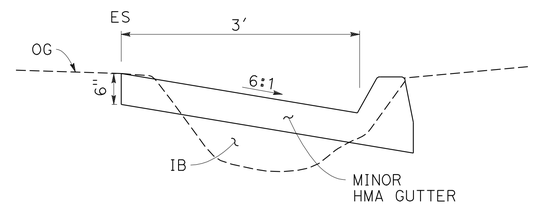

HMA GUTTER

R† B1 24+30 TO 29+30

3 f 4 f

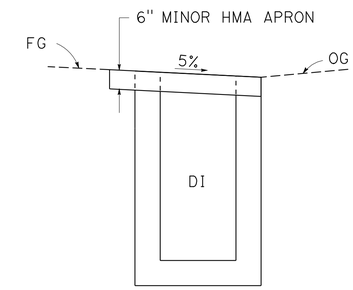

SECTION A-A

RE-ESTABLISH OUTFALL DITCH

SYSTEM No.	PM	Dmax	L	CONFORM FL
		FT		Elev
2g	15.15	0.8	4	5.0
7e	15.67	1.2	15	5.3
9g	16.72	0.5	14	5.8
11f	16.76	0.4	6.5	6.5
12f	16.80	0.6	7.9	6.1
13f	16.82	0.9	27	5.6
14e	16.85	0.5	15.1	5.8

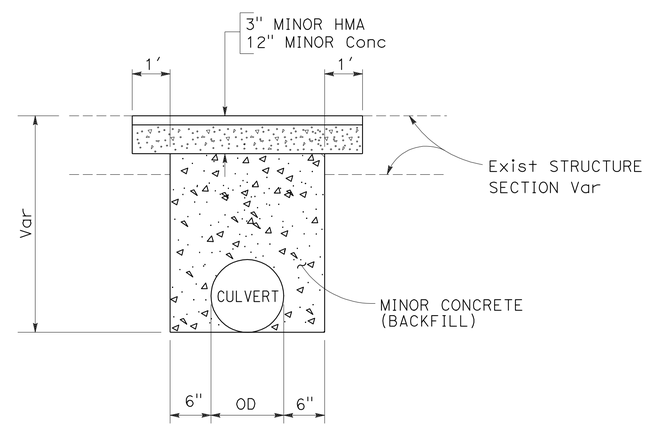

TRENCH PAVING DETAIL

2 b 3 c 4 c 5 c 6 c 7 b 8 c
9 b 10 c 11 c 12 c 13 c 14 b

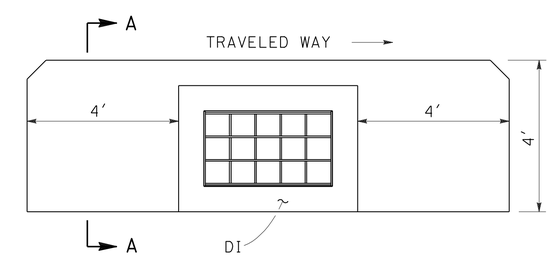

PLAN

MINOR HMA APRON

5 d 6 d 7 c 9 c
10 d 11 d 12 d 13 d 14 c

DRAINAGE DETAILS

NO SCALE

DD-1

CC	3/2/10	CHARLOTTE CASHIN	CALCULATED-DESIGNED BY
		JOSEPH PETERSON	CHECKED BY
		JOSEPH PETERSON	FUNCTIONAL SUPERVISOR
REVISED BY	DATE REVISED	HYDRAULICS	

STATE OF CALIFORNIA - DEPARTMENT OF TRANSPORTATION
Caltrans

LAST REVISION 03-18-10 | DATE PLOTTED => 16-JUN-2010 | TIME PLOTTED => 08:51

Dist	COUNTY	ROUTE	POST MILES TOTAL PROJECT	SHEET No.	TOTAL SHEETS
04	Mrn	1	15.0/17.0	27	50

Charlotte A. Cashin 3-11-10
REGISTERED CIVIL ENGINEER DATE

6-14-10
PLANS APPROVAL DATE

REGISTERED PROFESSIONAL ENGINEER Charlotte A. Cashin No. 34417 Exp. 9-30-11 CIVIL STATE OF CALIFORNIA

THE STATE OF CALIFORNIA OR ITS OFFICERS OR AGENTS SHALL NOT BE RESPONSIBLE FOR THE ACCURACY OR COMPLETENESS OF SCANNED COPIES OF THIS PLAN SHEET.

NOTE:

1. FOR DRAIN INLET DETAILS TYPE G1 (Mod) AND G2 (Mod) NOT SHOWN, SEE STANDARD PLANS.

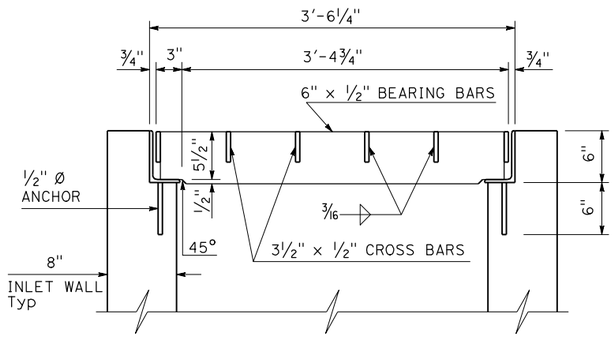

LONGITUDINAL SECTION
(THRU FRAME, GRATE AND INLET)

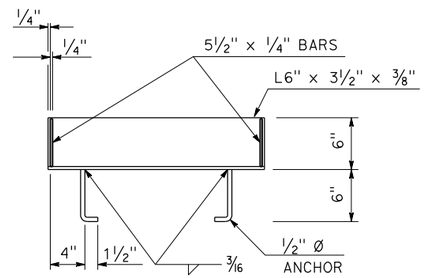

CROSS SECTION
(THRU FRAME)

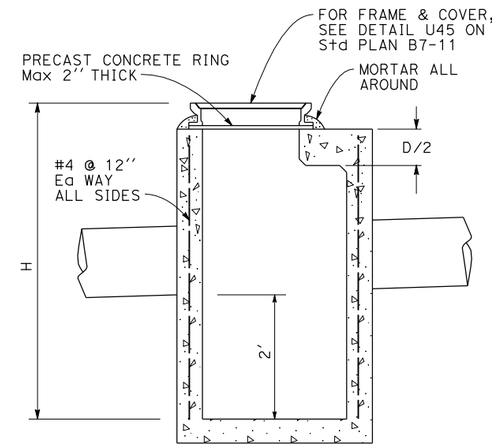

SECTION A-A

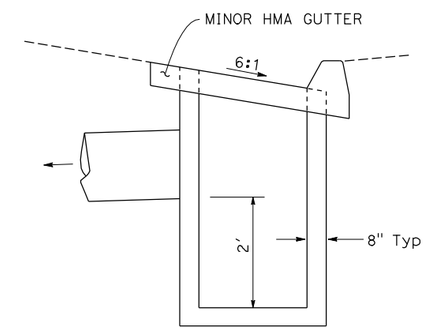

TYPICAL
G1 INLET (Mod) IN MINOR HMA GUTTER

3 d 4 d

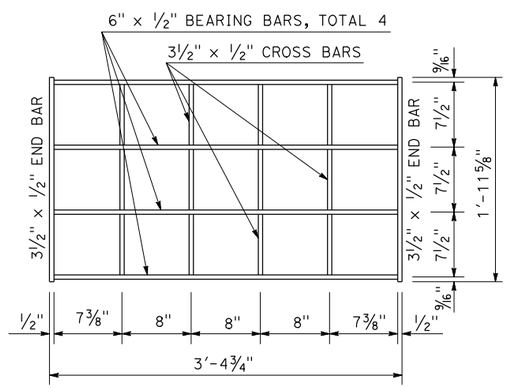

GRATE

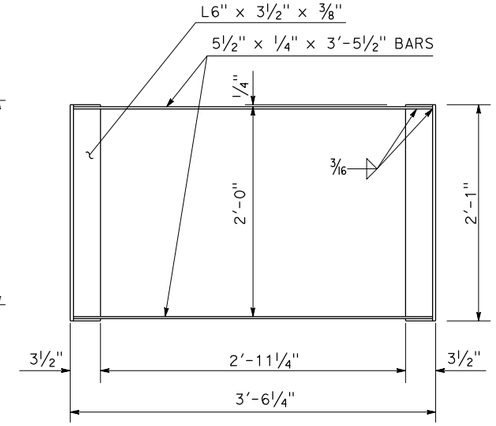

FRAME

FRAME AND GRATE TYPE 24-12 MODIFIED

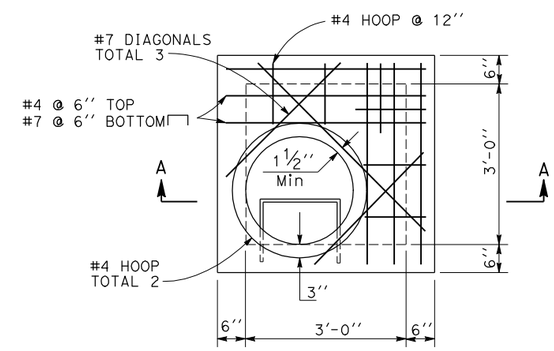

PLAN
G2 MH

5 f 6 f 7 f

NOTE:
FOR DETAILS NOT SHOWN, SEE Std PLAN D73 G2 INLET

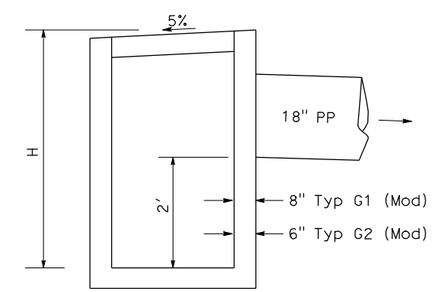

SECTION
G1 INLET (Mod) WITH SUMP

2 c 9 c 9 f 10 d
11 d 12 d 13 d 14 c

G2 INLET (Mod) WITH SUMP

8 d 8 g 8 j

NOTE:
FOR DETAILS NOT SHOWN, SEE Std PLAN D73 G1 INLET
FOR DETAILS NOT SHOWN, SEE Std PLAN D73 G2 INLET

DRAINAGE DETAILS
NO SCALE

DD-2

REVISED BY	DATE REVISED
CC	3/2/10

CHARLOTTE CASHIN — JOSEPH PETERSON — CALCULATED-DESIGNED BY — CHECKED BY

FUNCTIONAL SUPERVISOR: JOSEPH PETERSON

STATE OF CALIFORNIA - DEPARTMENT OF TRANSPORTATION
Caltrans
HYDRAULICS

LAST REVISION 03-11-10 — DATE PLOTTED => 16-JUN-2010 — TIME PLOTTED => 09:02

DRAINAGE QUANTITIES

DRAINAGE PLAN SHEET No.	DRAINAGE SYSTEM No.	DRAINAGE UNIT	REMOVE CULVERT (LF)	REMOVE INLET (EA)	REMOVE HEADWALL (EA)	MINOR HOT MIX ASPHALT (TON)	HMA (Misc AREA) (SQYD)	MINOR CONCRETE (CY)	MINOR CONCRETE (MINOR STRUCTURE) (CY)	MINOR CONCRETE (BACKFILL) (CY)	18" PP (LF)	18" CSP (0.064" THICK) (LF)	18" PLASTIC FLARED END SECTION (EA)	24" PLASTIC FLARED END SECTION (EA)	DITCH EXCAVATION (CY)	Misc IRON & STEEL (LB)	FRAME & GRATE [N] TYPE 24-12 (Mod) (EA)	FRAME & GRATE [N] TYPE 24-12x (EA)	MAXIMUM COVER [N] (LF)	HEIGHT OF INLET "H" [N] (LF)	TYPE U45 (FRAME & COVER) [N] (EA)	DESCRIPTION	STATION	DRAINAGE PLAN SHEET No.	DRAINAGE SYSTEM No.	DRAINAGE UNIT
D-1	1	a	3.0																			REMOVE 24" RCP	B1 13+91	D-1	1	a
↓	↓	b												1								24" PLASTIC FES		↓	↓	b
D-1	2	a	49.5																			REMOVE 18" CSP	B1 19+61	D-1	2	a
		b				1.8		3.5		2.7	35.0								2.4			18" PP				b
		c							1.52							239		1		5.7		G1 INLET (Mod)				c
		d									7.6								1.9			18" PP				d
		e											1									18" PLASTIC FES				e
		f											1									18" PLASTIC FES				f
↓	↓	g													0.3							RE-ESTABLISH OUTFALL DITCH		↓	↓	g
D-2	3	a	37.8																			REMOVE 18" RCP	B1 25+50	D-2	3	a
		b		1																		REMOVE INLET				b
		c				1.7		3.3		2.5	28.2								1.8			18" PP				c
		d							1.39							281	1			5.0		G1 INLET (Mod)				d
		e											1									18" PLASTIC FES				e
↓	↓	f				16.9	85.1															MINOR HMA GUTTER	B1 24+30 TO 26+24	↓	↓	f
D-2	4	a	30.0																			REMOVE 18" CSP	B1 26+98	D-2	4	a
		b		1																		REMOVE INLET				b
		c				1.7		3.4		3.1	30.6								2.0			18" PP				c
		d							1.43							281	1			5.2		G1 INLET (Mod)				d
		e											1									18" PLASTIC FES				e
↓	↓	f				26.6	134.2															MINOR HMA GUTTER	B1 26+24 TO 29+30	↓	↓	f
D-3	5	a	34.3																			REMOVE 18" CSP	B1 39+15	D-3	5	a
		b		1																		REMOVE INLET				b
		c				1.7		3.4		2.2	24.0								1.9			18" PP				c
		d				1.3	3.9		0.95							281	1			2.5		G1 INLET w/ HMA APRON				d
		e											1									18" PLASTIC FES				e
		f							1.87							435				5.2	1	G2 MANHOLE				f
↓	↓	g									5.1								1.5			18" PP		↓	↓	g
D-3	6	a	23.0																			REMOVE 12" TCP	B1 40+69	D-3	6	a
		b		1																		REMOVE INLET				b
		c				1.6		3.2		2.4	23.3								2.3			18" PP				c
		d				1.3	3.9		0.95							281	1			2.5		G1 INLET w/ HMA APRON				d
		e											1									18" PLASTIC FES				e
		f							1.85							435				5.1	1	G2 MANHOLE				f
↓	↓	g									4.3								1.4			18" PP		↓	↓	g
D-4	7	a	31.0																			REMOVE 18" CSP	B1 46+26	D-4	7	a
		b				1.7		3.3		2.7	24.4								2.5			18" PP				b
		c				1.3	3.9		0.95							281	1			2.8		G1 INLET w/ HMA APRON				c
		d											1									18" PLASTIC FES				d
		e													1.9							RE-ESTABLISH OUTFALL DITCH				e
		f							1.92							435				5.4	1	G2 MANHOLE				f
↓	↓	g									5.1								1.7			18" PP		↓	↓	g
			208.6	4	0	57.6	231.0	20.1	12.8	15.6	187.6	0	7	1	2.2	2949	5	1			3	SUBTOTAL (DQ-1)				

[N] NOT A SEPARATE PAY ITEM, FOR INFORMATION ONLY.

Dist	COUNTY	ROUTE	POST MILES TOTAL PROJECT	SHEET No.	TOTAL SHEETS
04	Mrn	1	15.0/17.0	28	50

Peter Aguilera 3-11-10
REGISTERED CIVIL ENGINEER DATE

6-14-10
PLANS APPROVAL DATE

REGISTERED PROFESSIONAL ENGINEER Peter Aguilera No. 55287 Exp. 12-31-10 CIVIL STATE OF CALIFORNIA

THE STATE OF CALIFORNIA OR ITS OFFICERS OR AGENTS SHALL NOT BE RESPONSIBLE FOR THE ACCURACY OR COMPLETENESS OF SCANNED COPIES OF THIS PLAN SHEET.

NOTES:

1. PLASTIC PIPE SHALL BE SMOOTH INTERIOR WALL TYPE.
2. PIPE JOINT CLASSIFICATION SHALL BE STANDARD JOINT TYPE.
3. HEIGHT OF INLET "H" IS FROM TOP OF GRATE OR COVER TO INSIDE BOTTOM OF DRAIN INLET OR MANHOLE. SEE DD-2.

DRAINAGE QUANTITIES

DQ-1

STATE OF CALIFORNIA - DEPARTMENT OF TRANSPORTATION
Caltrans
DESIGN

REVISED BY: SO — DATE REVISED: 3/3/10
SUSANA OÑATE — PETER AGUILERA
CALCULATED-DESIGNED BY — CHECKED BY
FUNCTIONAL SUPERVISOR: ARLISSA PANG

LAST REVISION 05-13-10
DATE PLOTTED => 16-JUN-2010
TIME PLOTTED => 09:20

Dist	COUNTY	ROUTE	POST MILES TOTAL PROJECT	SHEET No.	TOTAL SHEETS
04	Mrn	1	15.0/17.0	29	50

Peter Aguilera 3-11-10
REGISTERED CIVIL ENGINEER DATE

6-14-10
PLANS APPROVAL DATE

REGISTERED PROFESSIONAL ENGINEER Peter Aguilera No. 55287 Exp. 12-31-10 CIVIL STATE OF CALIFORNIA

THE STATE OF CALIFORNIA OR ITS OFFICERS OR AGENTS SHALL NOT BE RESPONSIBLE FOR THE ACCURACY OR COMPLETENESS OF SCANNED COPIES OF THIS PLAN SHEET.

DRAINAGE QUANTITIES

DRAINAGE PLAN SHEET No.	DRAINAGE SYSTEM No.	DRAINAGE UNIT	REMOVE CULVERT (LF)	REMOVE INLET (EA)	REMOVE HEADWALL (EA)	MINOR HOT MIX ASPHALT (TON)	HMA (Misc AREA) (SQYD)	MINOR CONCRETE (CY)	MINOR CONCRETE (MINOR STRUCTURE) (CY)	MINOR CONCRETE (BACKFILL) (CY)	18" PP (LF)	18" CSP (0.064" THICK) (LF)	18" PLASTIC FLARED END SECTION (EA)	24" PLASTIC FLARED END SECTION (EA)	DITCH EXCAVATION (CY)	Misc IRON & STEEL (LB)	FRAME & GRATE [N] TYPE 24-12 (Mod) (EA)	FRAME & GRATE [N] TYPE 24-12x (EA)	MAXIMUM COVER [N] (LF)	HEIGHT OF INLET "H" [N] (LF)	TYPE U45 (FRAME & COVER) [N] (EA)	DESCRIPTION	STATION	DRAINAGE PLAN SHEET No.	DRAINAGE SYSTEM No.	DRAINAGE UNIT
D-4	8	a	41.5																			REMOVE 12" CSP	B1 48+51	D-4	8	a
		b		1																		REMOVE INLET				b
		c				1.7		3.4		3.4	29.4								2.7			18" PP				c
		d							2.13							239		1		6.2		G2 INLET (Mod)				d
		e											1									18" PLASTIC FES				e
		f									13.0								2.2			18" PP				f
		g							1.90							239		1		5.3		G2 INLET (Mod)				g
		h										8.5							0.8			18" CSP				h
		i									57.0								1.7			18" PP				i
		j							1.64							239		1		4.3		G2 INLET (Mod)				j
		k										8.5							0.6			18" CSP				k
D-4	9	a	27.8																			REMOVE 12" CSP	B1 99+99	D-4	9	a
		b				1.6		3.1		2.8	30.5								2.3			18" PP				b
		c				1.3	3.9		1.52							281	1			5.6		G1 INLET (Mod) w/ HMA APRON				c
		d											1									18" PLASTIC FES				d
		e									17.3								2.0			18" PP				e
		f							1.50							281	1			5.5		G1 INLET (Mod)				f
		g													0.5							RE-ESTABLISH OUTFALL DITCH				g
D-5	10	a	30.4																			REMOVE 12" TCP	B1 100+93	D-5	10	a
		b		1																		REMOVE INLET				b
		c				1.6		3.2		1.4	29.0								1.5			18" PP				c
		d				1.3	3.9		1.30							281	1			4.6		G1 INLET (Mod) w/ HMA APRON				d
		e											1									18" PLASTIC FES				e
D-5	11	a	27.4																			REMOVE 10" TCP	B1 102+15	D-5	11	a
		b		1																		REMOVE INLET				b
		c				1.6		3.1		2.0	28.2								1.9			18" PP				c
		d				1.3	3.9		1.32							281	1			4.7		G1 INLET (Mod) w/ HMA APRON				d
		e											1									18" PLASTIC FES				e
		f													0.2							RE-ESTABLISH OUTFALL DITCH				f
D-5	12	a	28.8																			REMOVE 8" TCP	B1 104+30	D-5	12	a
		b		1																		REMOVE INLET				b
		c				1.6		3.1		2.3	27.9								2.1			18" PP				c
		d				1.3	3.9		1.32							281	1			4.7		G1 INLET (Mod) w/ HMA APRON				d
		e											1									18" PLASTIC FES				e
		f													0.3							RE-ESTABLISH OUTFALL DITCH				f
D-6	13	a	32.4																			REMOVE 23" x 14" CMPA	B1 105+48	D-6	13	a
		b			1																	REMOVE HEADWALL				b
		c				1.6		3.2		2.2	31.1								2.0			18" PP				c
		d				1.3	3.9		1.30							281	1			4.6		G1 INLET (Mod) w/ HMA APRON				d
		e											1									18" PLASTIC FES				e
		f													2.1							RE-ESTABLISH OUTFALL DITCH				f
D-6	14	a	30.0																			REMOVE 12" RCP/CMP	B1 106+72	D-6	14	a
		b				2.2		4.3		2.1	36.6								1.7			18" PP				b
		c				1.3	3.9		1.21							281	1			4.2		G1 INLET (Mod) w/ HMA APRON				c
		d											1									18" PLASTIC FES				d
		e													0.5							RE-ESTABLISH OUTFALL DITCH				e
			218.3	4	1	19.7	23.4	23.4	15.1	16.2	300.0	17.0	7	0	3.6	2684	7	3			0	SUBTOTAL (DQ-2)				
			426.9	8	1	77.3	254.4	43.5	27.9	31.8	487.6	17.0	14	1	5.8	5633	12	4			3	TOTAL (FROM DQ-1 & DQ-2)				

[N] NOT A SEPARATE PAY ITEM, FOR INFORMATION ONLY.

DRAINAGE QUANTITIES

DQ-2

STATE OF CALIFORNIA - DEPARTMENT OF TRANSPORTATION
Caltrans
DESIGN

FUNCTIONAL SUPERVISOR: ARLISSA PANG
CALCULATED-DESIGNED BY: SUSANA OÑATE
CHECKED BY: PETER AGUILERA
REVISED BY: SO
DATE REVISED: 3/3/10

LAST REVISION 05-13-10 | DATE PLOTTED => 16-JUN-2010 | TIME PLOTTED => 09:20

Dist	COUNTY	ROUTE	POST MILES TOTAL PROJECT	SHEET No.	TOTAL SHEETS
04	Mrn	1	15.0/17.0	30	50

Peter Aguilera 3-11-10
REGISTERED CIVIL ENGINEER DATE

6-14-10
PLANS APPROVAL DATE

REGISTERED PROFESSIONAL ENGINEER
Peter Aguilera
No. 55287
Exp. 12-31-10
CIVIL
STATE OF CALIFORNIA

THE STATE OF CALIFORNIA OR ITS OFFICERS OR AGENTS SHALL NOT BE RESPONSIBLE FOR THE ACCURACY OR COMPLETENESS OF SCANNED COPIES OF THIS PLAN SHEET.

ABBREVIATION:

TR TERMINAL RISER

LEGEND:

---- 6" PPP UD ℄

[No.] STRUCTURAL SECTION, SEE TYPICAL CROSS SECTION X-1

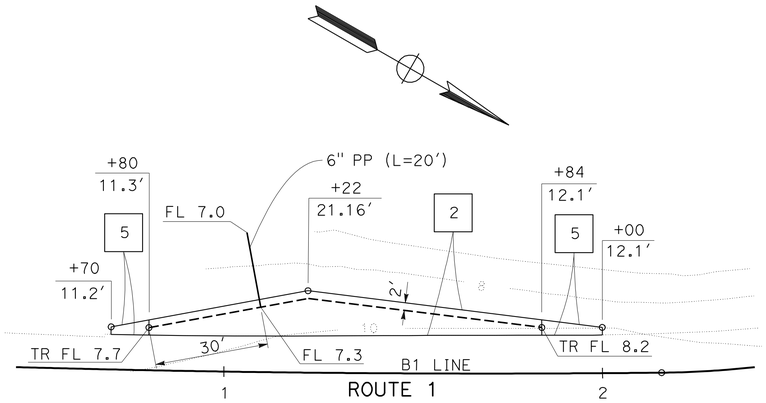

PULLOUT 1

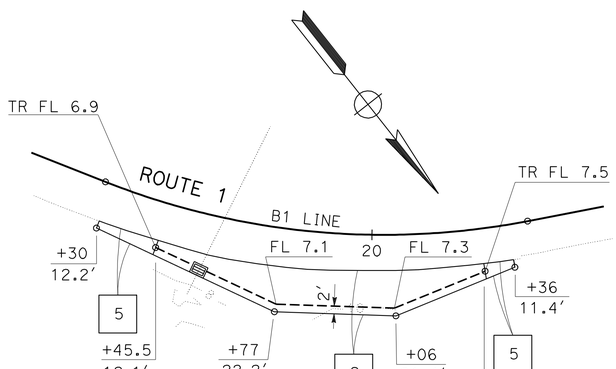

PULLOUT 2

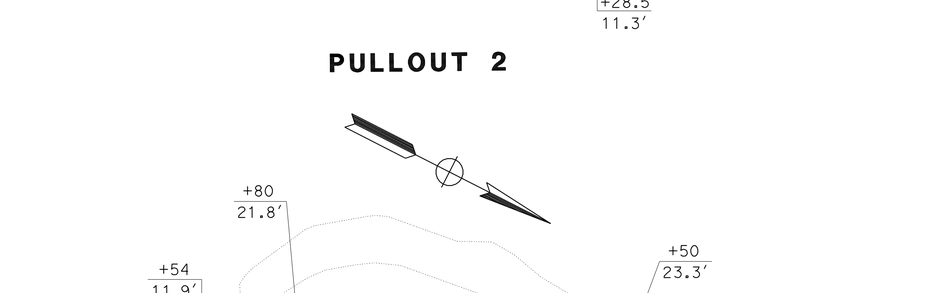

PULLOUT 3

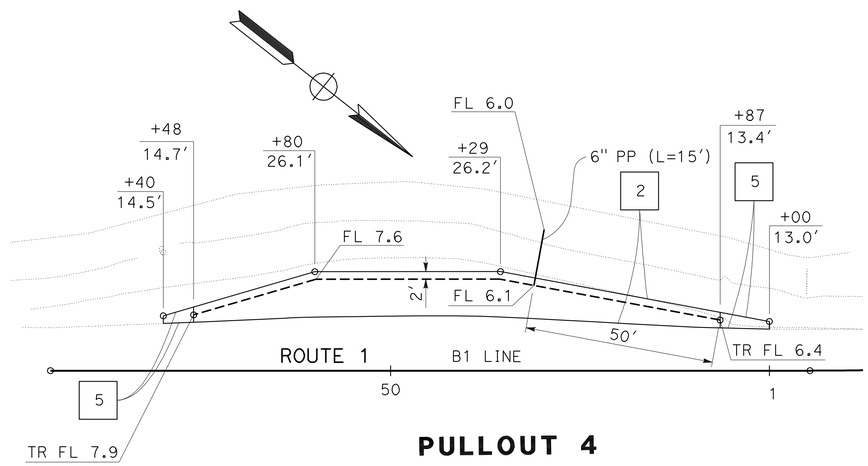

PULLOUT 4

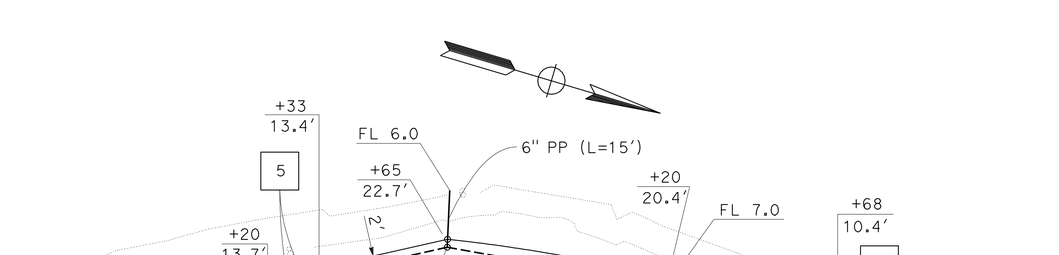

PULLOUT 5

THIS PLAN ACCURATE FOR UNDERDRAIN WORK ONLY

SUBSURFACE DRAINS
UNDERDRAINS
SCALE: 1" = 20′

ED-1

STATE OF CALIFORNIA - DEPARTMENT OF TRANSPORTATION
Caltrans®
DESIGN

FUNCTIONAL SUPERVISOR: ARLISSA PANG
CALCULATED-DESIGNED BY: PETER AGUILERA
CHECKED BY:
REVISED BY: SO
DATE REVISED: 3/9/10

LAST REVISION 03-15-10
DATE PLOTTED => 16-JUN-2010
TIME PLOTTED => 09:20

Dist	COUNTY	ROUTE	POST MILES TOTAL PROJECT	SHEET No.	TOTAL SHEETS
04	Mrn	1	15.0/17.0	31	50

Peter Aguilera 3-11-10
REGISTERED CIVIL ENGINEER DATE

6-14-10
PLANS APPROVAL DATE

REGISTERED PROFESSIONAL ENGINEER
Peter Aguilera
No. 55287
Exp. 12-31-10
CIVIL
STATE OF CALIFORNIA

THE STATE OF CALIFORNIA OR ITS OFFICERS OR AGENTS SHALL NOT BE RESPONSIBLE FOR THE ACCURACY OR COMPLETENESS OF SCANNED COPIES OF THIS PLAN SHEET.

PULLOUT 6

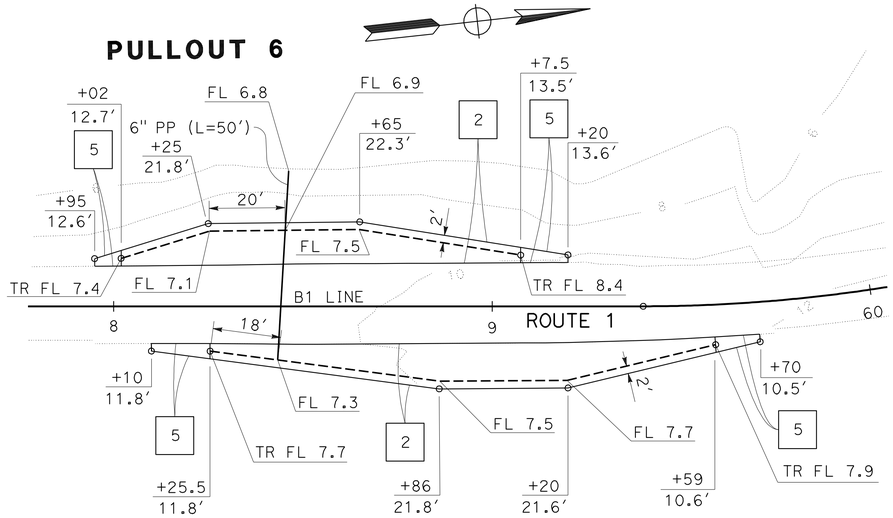

PULLOUT 7

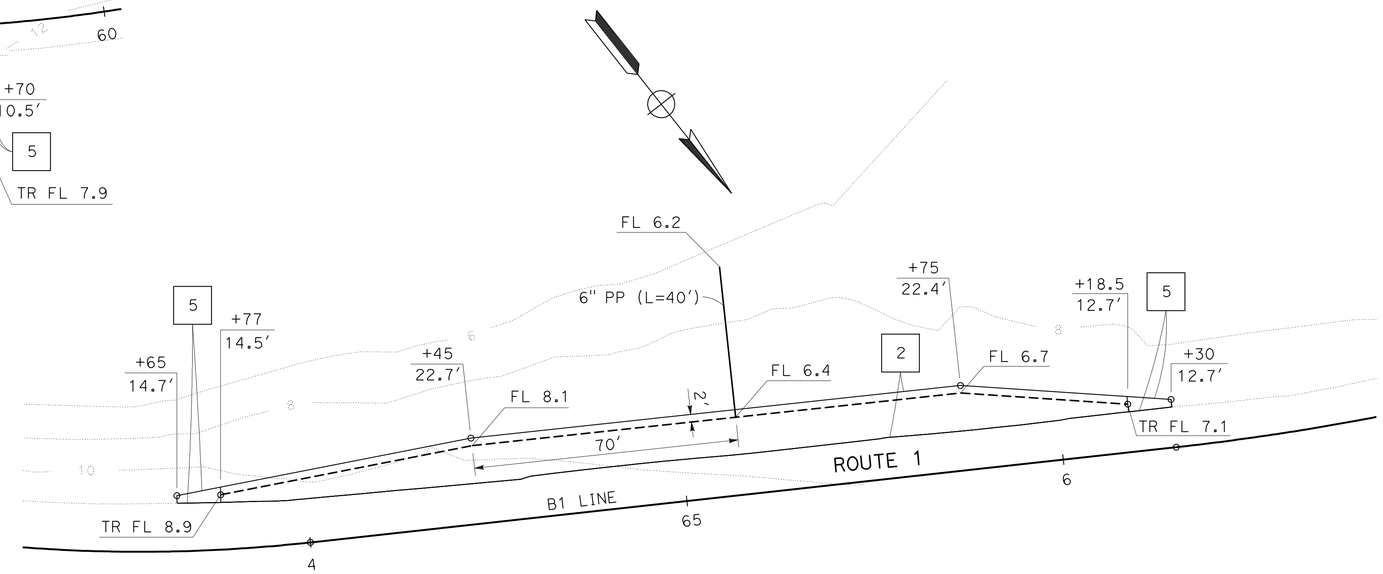

PULLOUT 8

PULLOUT 9

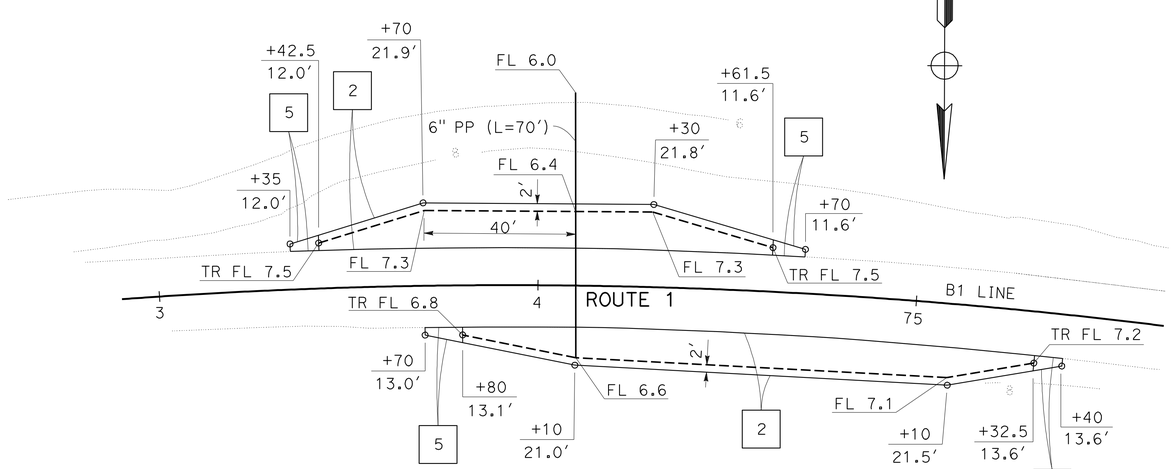

PULLOUT 10

THIS PLAN ACCURATE FOR UNDERDRAIN WORK ONLY

FOR NOTES, ABBREVIATIONS AND LEGEND, SEE SHEET ED-1

SUBSURFACE DRAINS
UNDERDRAINS
SCALE: 1" = 20′

ED-2

REVISED BY	DATE REVISED
SO	3/9/10

CALCULATED-DESIGNED BY: SUSANA OÑATE
CHECKED BY: PETER AGUILERA
FUNCTIONAL SUPERVISOR: ARLISSA PANG

STATE OF CALIFORNIA - DEPARTMENT OF TRANSPORTATION
Caltrans
DESIGN

LAST REVISION 03-15-10
DATE PLOTTED => 16-JUN-2010
TIME PLOTTED => 09:20

Dist	COUNTY	ROUTE	POST MILES TOTAL PROJECT	SHEET No.	TOTAL SHEETS
04	Mrn	1	15.0/17.0	32	50

Petey Aguilera 3-11-10
REGISTERED CIVIL ENGINEER DATE

6-14-10
PLANS APPROVAL DATE

REGISTERED PROFESSIONAL ENGINEER
Peter Aguilera
No. 55287
Exp. 12-31-10
CIVIL
STATE OF CALIFORNIA

THE STATE OF CALIFORNIA OR ITS OFFICERS OR AGENTS SHALL NOT BE RESPONSIBLE FOR THE ACCURACY OR COMPLETENESS OF SCANNED COPIES OF THIS PLAN SHEET.

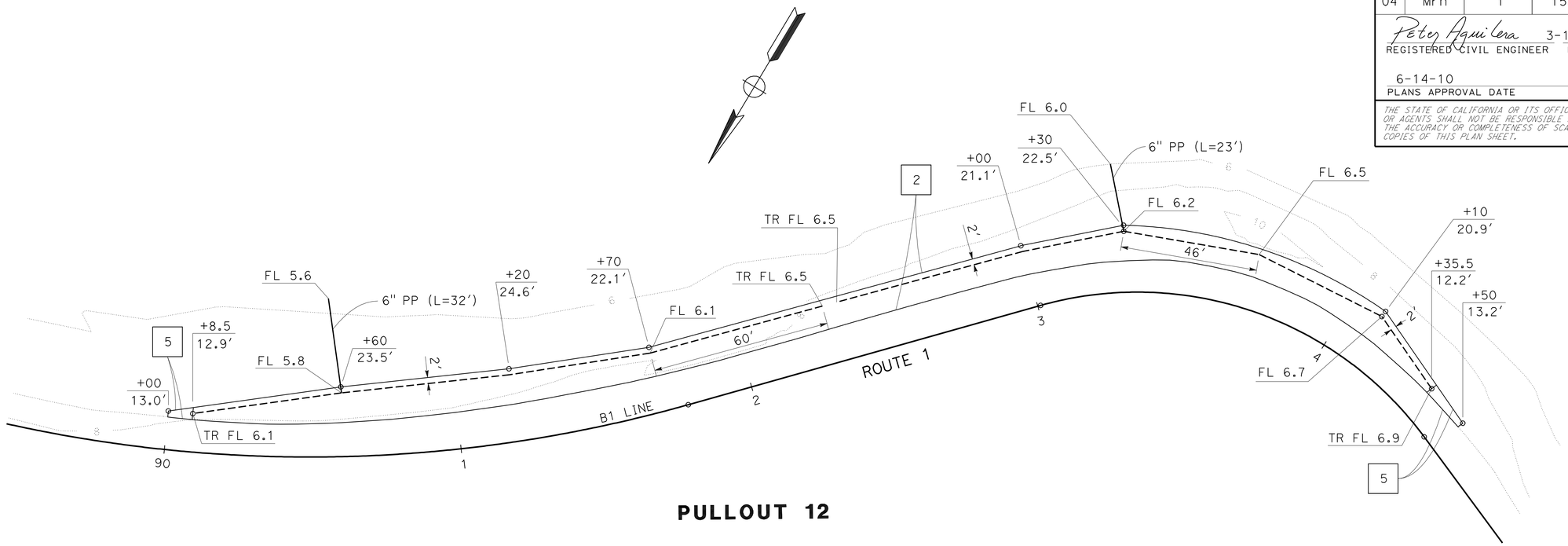

PULLOUT 12

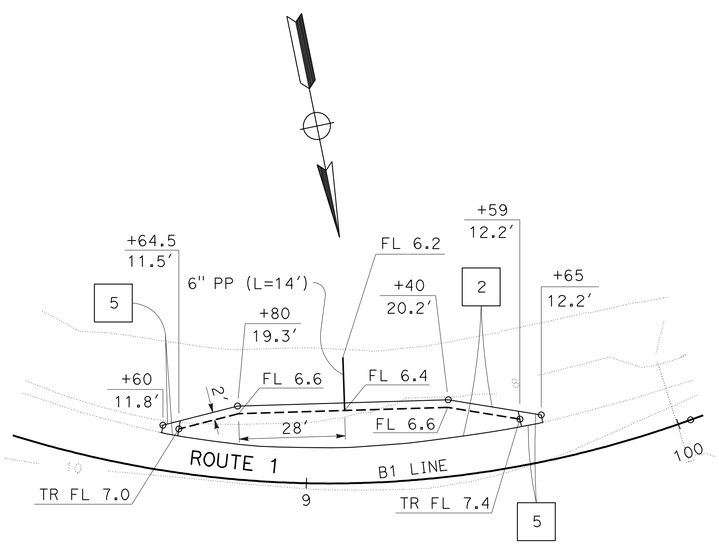

PULLOUT 13

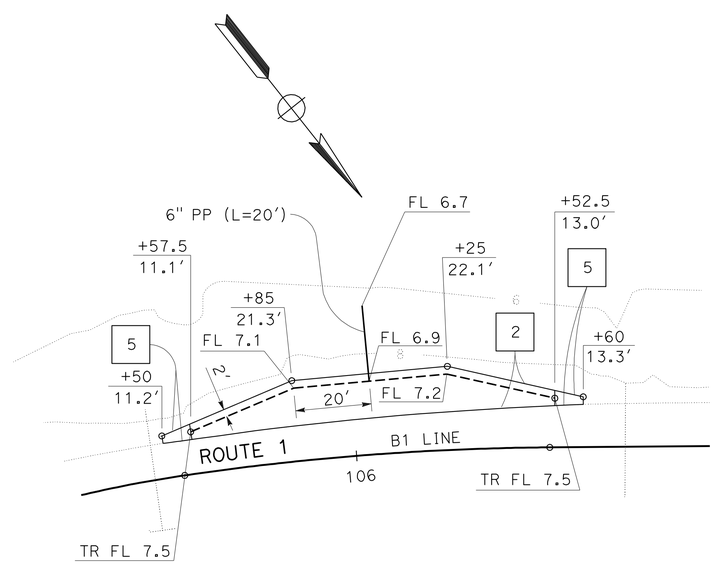

PULLOUT 14

THIS PLAN ACCURATE FOR UNDERDRAIN WORK ONLY

FOR NOTES, ABBREVIATIONS AND LEGEND, SEE SHEET ED-1

SUBSURFACE DRAINS
UNDERDRAINS
SCALE: 1" = 20′

ED-3

SO	3/9/10
REVISED BY	DATE REVISED
SUSANA OÑATE	PETER AGUILERA
CALCULATED-DESIGNED BY	CHECKED BY
FUNCTIONAL SUPERVISOR	ARLISSA PANG

STATE OF CALIFORNIA - DEPARTMENT OF TRANSPORTATION
Caltrans
DESIGN

LAST REVISION 03-15-10
DATE PLOTTED => 16-JUN-2010
TIME PLOTTED => 09:20

Dist	COUNTY	ROUTE	POST MILES TOTAL PROJECT	SHEET No.	TOTAL SHEETS
04	Mrn	1	15.0/17.0	33	50

REGISTERED CIVIL ENGINEER 3-11-10 DATE

6-14-10
PLANS APPROVAL DATE

REGISTERED PROFESSIONAL ENGINEER
Jerilyn L. Struven
No. 49964
Exp. 12-31-10
CIVIL
STATE OF CALIFORNIA

THE STATE OF CALIFORNIA OR ITS OFFICERS OR AGENTS SHALL NOT BE RESPONSIBLE FOR THE ACCURACY OR COMPLETENESS OF SCANNED COPIES OF THIS PLAN SHEET.

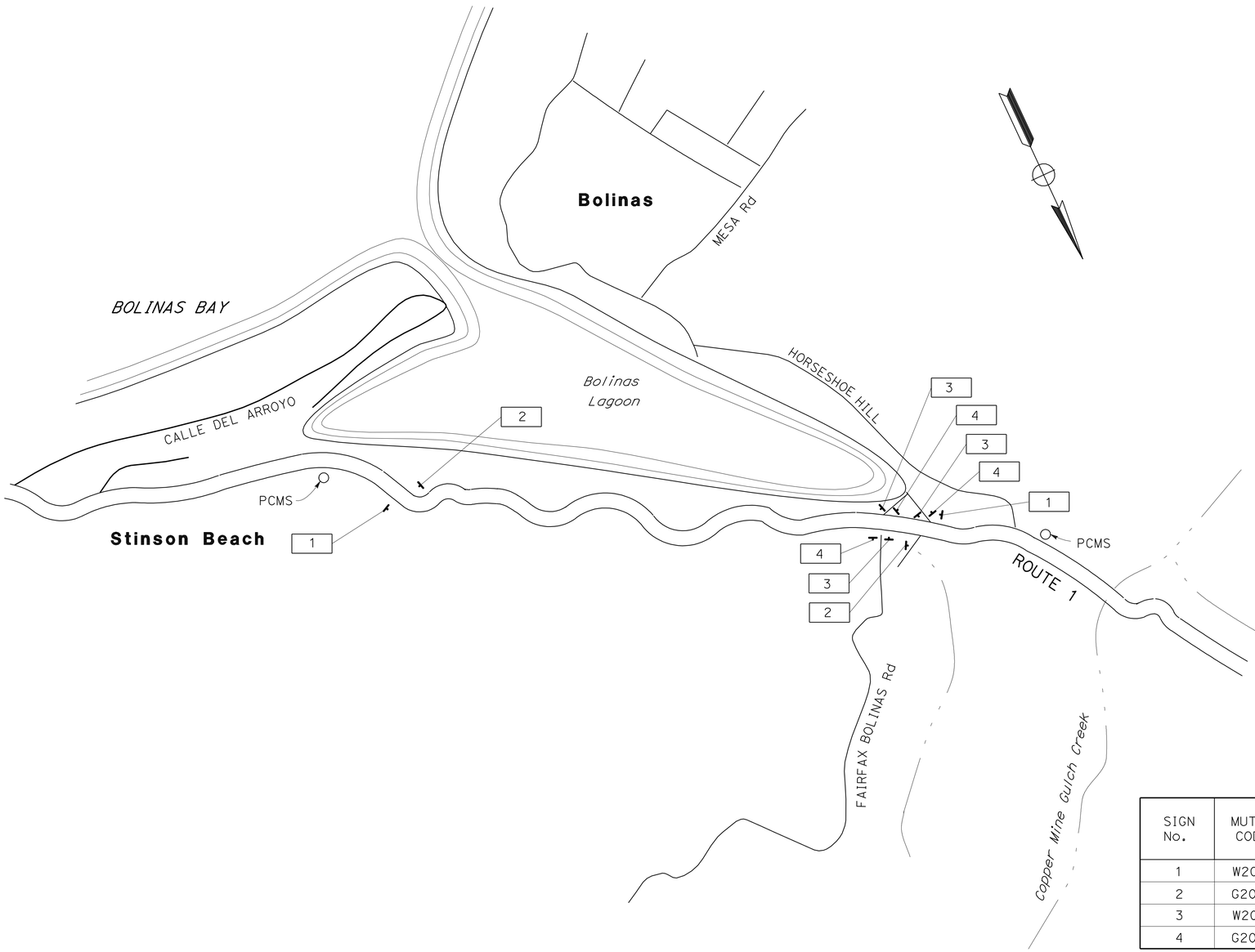

ABBREVIATION:

PCMS PORTABLE CHANGEABLE MESSAGE SIGN

LEGEND:

CONSTRUCTION AREA SIGN NUMBER

NOTES:

1. EXACT LOCATION OF CONSTRUCTION AREA SIGNS AND PCMS TO BE DETERMINED BY THE ENGINEER.
2. CONSTRUCTION AREA SIGNS TO BE STATIONARY MOUNTED UNLESS OTHERWISE NOTED.

CONSTRUCTION AREA SIGNS

SIGN No.	MUTCD CODE	MESSAGE	PANEL SIZE	No. OF POSTS AND SIZE	QUANTITY
					EA
1	W20-1	ROAD WORK AHEAD	48" x 48"	1 - 4" x 6"	2
2	G20-2	END ROAD WORK	48" x 24"	1 - 4" x 4"	2
3	W20-1	ROAD WORK AHEAD	36" x 36"	1 - 4" x 4"	3
4	G20-2	END ROAD WORK	36" x 18"	1 - 4" x 4"	3

CONSTRUCTION AREA SIGNS

NO SCALE

THIS PLAN ACCURATE FOR CONSTRUCTION AREA SIGN WORK ONLY

CS-1

STATE OF CALIFORNIA - DEPARTMENT OF TRANSPORTATION
Caltrans
TRAFFIC

FUNCTIONAL SUPERVISOR: ROLAND AU-YEUNG
CALCULATED-DESIGNED BY: JERILYN L. STRUVEN
CHECKED BY: ROLAND AU-YEUNG
REVISED BY: JS
DATE REVISED: 3/9/10

LAST REVISION 03-09-10 | DATE PLOTTED => 16-JUN-2010 | TIME PLOTTED => 09:21

BORDER LAST REVISED 4/11/2008 | RELATIVE BORDER SCALE IS IN INCHES 0 1 2 3 | USERNAME => trstrk | DGN FILE => 44s5401a001.dgn | CU 04224 | EA 4S5401

Dist	COUNTY	ROUTE	POST MILES TOTAL PROJECT	SHEET No.	TOTAL SHEETS
04	Mrn	1	15.0/17.0	34	50

Peter Aguilera 3-11-10
REGISTERED CIVIL ENGINEER DATE

6-14-10
PLANS APPROVAL DATE

REGISTERED PROFESSIONAL ENGINEER Peter Aguilera No. 55287 Exp. 12-31-10 CIVIL STATE OF CALIFORNIA

THE STATE OF CALIFORNIA OR ITS OFFICERS OR AGENTS SHALL NOT BE RESPONSIBLE FOR THE ACCURACY OR COMPLETENESS OF SCANNED COPIES OF THIS PLAN SHEET.

LEGEND:

⟨No.⟩ PAVEMENT DELINEATION DETAIL

NOTE:

1. PAVEMENT MARKERS FOR DETAIL 22 SHALL BE RECESSED.

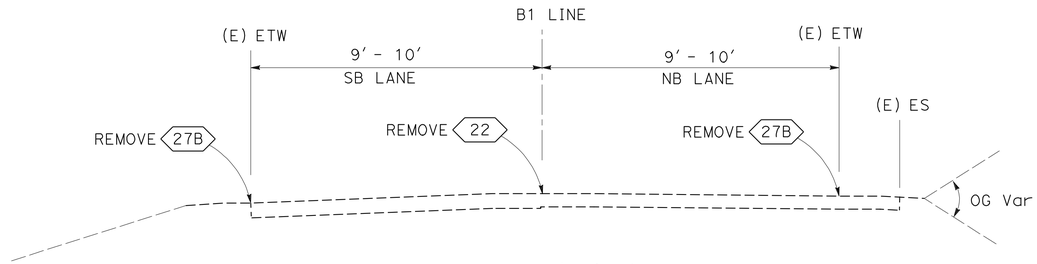

TYPICAL (Exist)

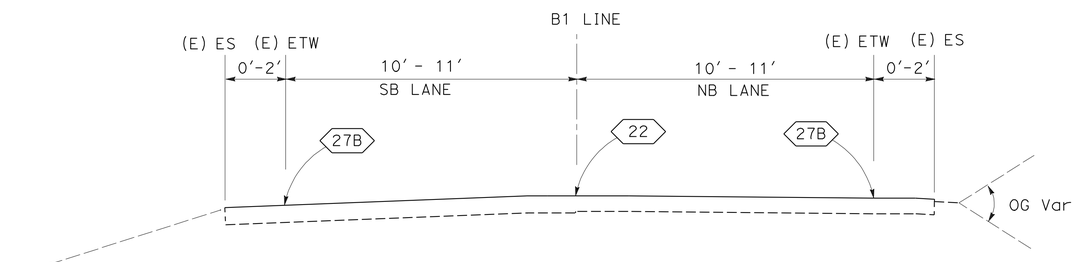

TYPICAL

TRAFFIC STRIPES AND PAVEMENT MARKERS

LOCATION	DETAIL No.	REMOVE PAVEMENT MARKER	REMOVE THERMOPLASTIC TRAFFIC STRIPE 4"		THERMOPLASTIC TRAFFIC STRIPE 4"		PAVEMENT MARKER (RETROREFLECTIVE RECESSED)	REMOVE MARKER	MILEPOST MARKER
			YELLOW	WHITE	YELLOW	WHITE	TYPE D		
		EA	FT				EA		
B1 10+70 TO 114+00	22	285	20660		20660		856		
	27B			20660		20660			
								43	54
TOTAL		285	20660	20660	41320		856	43	54

PAVEMENT DELINEATION AND QUANTITIES

NO SCALE

PD-1

STATE OF CALIFORNIA - DEPARTMENT OF TRANSPORTATION
Caltrans® DESIGN

FUNCTIONAL SUPERVISOR: ARLISSA PANG
CALCULATED-DESIGNED BY: SUSANA OÑATE
CHECKED BY: PETER AGUILERA
REVISED BY: SO
DATE REVISED: 3/9/10

LAST REVISION 05-13-10 | DATE PLOTTED => 16-JUN-2010 | TIME PLOTTED => 09:21

Dist	COUNTY	ROUTE	POST MILES TOTAL PROJECT	SHEET No.	TOTAL SHEETS
04	Mrn	1	15.0/17.0	35	50

Peter Aguilera 3-11-10
REGISTERED CIVIL ENGINEER DATE

6-14-10
PLANS APPROVAL DATE

REGISTERED PROFESSIONAL ENGINEER Peter Aguilera No. 55287 Exp. 12-31-10 CIVIL STATE OF CALIFORNIA

THE STATE OF CALIFORNIA OR ITS OFFICERS OR AGENTS SHALL NOT BE RESPONSIBLE FOR THE ACCURACY OR COMPLETENESS OF ELECTRONIC COPIES OF THIS PLAN SHEET.

EROSION CONTROL QUANTITIES

LOCATION	SHEET No.	FIBER ROLLS	EROSION CONTROL (HYDROSEED)	ROLLED EROSION CONTROL PRODUCT (NETTING)
		LF	SQFT	
LOCATION 2 (PM 15.15)	EC-1	165	1200	800
LOCATION 8 (PM 15.15)	EC-2	135	1800	700
TOTAL		300	3000	1500

ROCK SLOPE PROTECTION

LOCATION	SHEET No.	ROCK SLOPE PROTECTION (LIGHT, METHOD B)	ROCK SLOPE PROTECTION FABRIC	EXCAVATION (ROCK SLOPE PROTECTION) [N]
		CY	SQYD	CY
B1 10+70 L+ TO 106+60 L+ (Exist SCATTERED RSP IN BOLINAS LAGOON)	L-1 TO L-7			250
B1 11+47 TO 28+33	L-1	929	2810	956
B1 33+30 TO 46+45	L-2, L-3	756	2192	651
B1 48+31 TO 53+53	L-3	341	870	299
B1 70+50 TO 78+95	L-4, L-5	684	1408	641
B1 100+03 TO 105+50	L-6, L-7	343	912	295
TOTAL		3053	8192	3092

[N] FOR INFORMATION ONLY. NOT A SEPARATE PAY ITEM.

EARTHWORK

LOCATION	SHEET No.	EXCAVATION PULLOUTS & SHOULDER [N]	EMBANKMENT [N]	IMPORTED MATERIAL (SHOULDER BACKING)
		CY	TON	
B1 10+70 TO 106+60	L-1 TO L-7	1031		122
B1 100+02 R+ TO 106+70 R+	L-6, L-7		133	
DRAINAGE SYSTEM 2 (NB)	D-1, DP-1		36	
DRAINAGE SYSTEM 8 (NB)	D-4, DP-4		216	
TOTAL		1031	385	122

[N] FOR INFORMATION ONLY. NOT A SEPARATE PAY ITEM.

ROADWAY QUANTITIES

LOCATION	DIRECTION	SHEET No.	COLD PLANE AC PAVEMENT	HOT MIX ASPHALT (TYPE A)	TACK COAT	MINOR Conc (BACKFILL)	HMA (BONDED WEARING COURSE GAP GRADED)	ASPHALTIC EMULSION MEMBRANE (BONDED WEARING COURSE)	HOT MIX ASPHALT (OPEN GRADED)	LIQUID ASPHALT (PRIME COAT)	ASPHALT TREATED PERMEABLE BASE	PERMEABLE MATERIAL			MINOR CONCRETE (CURB)	PAVEMENT MARKER (NON-REFLECTIVE)	UNDERDRAIN			
												CI 1 (TYPE A)	BLANKET	FILTER FABRIC [N]	TYPE A-1 Mod	TYPE A	6" PERFORATED PLASTIC PIPE UNDERDRAIN	6" PLASTIC PIPE*	FILTER FABRIC [N]	PERMEABLE MATERIAL [N]
			SQYD	TON		CY	TON				CY			SQYD	CY	EA	LF		SQYD	CY
B1 11+24 TO 113+61	NB/SB	L-1 to L-7	25024	5067.3	10		1064	21												
B1 14+00 TO 18+50	SB	L-1		58.7																
B1 20+76 TO 24+00	SB	L-1		42.3																
B1 35+50 TO 39+50	SB	L-2		52.2																
B1 40+59 TO 42+55	SB	L-3		25.6																
B1 44+50 TO 46+34	SB	L-3		24.0																
B1 48+31 TO 49+40	SB	L-3		14.2																
B1 51+00 TO 53+53	SB	L-3		33.0																
B1 70+50 TO 73+35	SB	L-4, L-5		37.2																
B1 74+70 TO 78+95	SB	L-5		55.5																
B1 100+03 TO 105+50	SB	L-6		71.4																
B1 10+70 TO 12+00 (PULLOUT 1)	SB	L-1, ED-1		1.5		2.7			17.0	0.1	8.4	5.6	16.8	217	3.7	1	104.9	24	53	6.6
B1 19+30 TO 20+36 (PULLOUT 2)	NB	L-1, ED-1		1.4		2.4			16.4	0.1	8.1	5.4	16.2	207	3.2	1	88.0	4	46	5.7
B1 46+34 TO 48+00 (PULLOUT 3)	SB	L-3, ED-1		1.8		3.2			28.9	0.2	14.3	9.5	28.6	363	4.9	1	148.6	16	71	8.8
B1 49+40 TO 51+00 (PULLOUT 4)	SB	L-3, ED-1		1.2		2.2			25.6	0.2	12.7	8.5	25.3	322	4.4	1	141.3	19	63	7.9
B1 55+20 TO 56+85 (PULLOUT 5)	SB	L-4, ED-1		1.7		3.1			26.4	0.2	13.0	8.7	26.1	333	4.8	1	144.3	19	69	8.5
B1 57+95 TO 59+20 (PULLOUT 6)	SB	L-4, ED-2		1.1		2.0			18.6	0.1	9.2	6.1	18.4	235	3.4	1	107.1	58	49	6.1
B1 58+10 TO 59+70 (PULLOUT 7)	NB	L-4, ED-2		1.5		2.8			23.9	0.1	11.8	7.9	23.6	310	4.4	1	135.1		63	7.9
B1 63+65 TO 66+30 (PULLOUT 8)	SB	L-5, ED-2		1.3		2.4			47.1	0.3	23.3	15.5	46.5	588	7.2	1	241.6	44	103	12.8
B1 73+35 TO 74+70 (PULLOUT 9)	SB	L-5, ED-2		0.9		1.7			23.2	0.1	11.5	7.7	22.9	291	3.8	1	122.6	78	54	6.7
B1 73+70 TO 75+40 (PULLOUT 10)	NB	L-5, ED-2		1.0		1.8			27.5	0.2	13.6	9.1	27.2	345	4.6	1	151.8		66	8.2
B1 80+54 TO 84+40 (PULLOUT 11)	SB	L-5		297.2												1				
B1 90+00 TO 94+50 (PULLOUT 12)	SB	L-6, ED-3		1.3		2.4			85.6	0.5	42.3	28.2	84.6	1067	12.6	1	436.6	59	182	22.6
B1 98+60 TO 99+65 (PULLOUT 13)	SB	L-6, ED-3		0.6		1.0			16.8	0.1	8.3	5.6	16.6	211	2.7	1	90.8	18	39	4.9
B1 105+50 TO 106+59 (PULLOUT 14)	SB	L-7, ED-3		0.9		1.6			18.3	0.1	9.0	6.0	18.1	230	3.1	1	99.4	24	45	5.6
TOTAL			25024	5794.8	10	29.3	1064	21	375.3	2.3	185.5	123.8	370.9	4719	62.8	14	2012.1	363	903	112.3

[N] FOR INFORMATION ONLY. NOT A SEPARATE PAY ITEM.
* QUANTITY INCLUDES TERMINAL RISER LENGTH.

SUMMARY OF QUANTITIES

Q-1

REVISED BY: SO — DATE REVISED: 3/15/10
CALCULATED-DESIGNED BY: SUSANA OÑATE — CHECKED BY: PETER AGUILERA
FUNCTIONAL SUPERVISOR: ARLISSA PANG
STATE OF CALIFORNIA - DEPARTMENT OF TRANSPORTATION — Caltrans — DESIGN

LAST REVISION 06-14-10 — DATE PLOTTED => 13-AUG-2010 — TIME PLOTTED => 13:03

DIST	COUNTY	ROUTE	POST MILES TOTAL PROJECT	SHEET NO.	TOTAL SHEETS
04	Mrn	1	15.0/17.0	36	50

REGISTERED CIVIL ENGINEER

November 17, 2006
PLANS APPROVAL DATE

REGISTERED PROFESSIONAL ENGINEER
Michael Janzen
No. 44788
Exp. 03-31-08
CIVIL
STATE OF CALIFORNIA

The State of California or its officers or agents shall not be responsible for the accuracy or completeness of electronic copies of this plan sheet.

To accompany plans dated 6-14-10

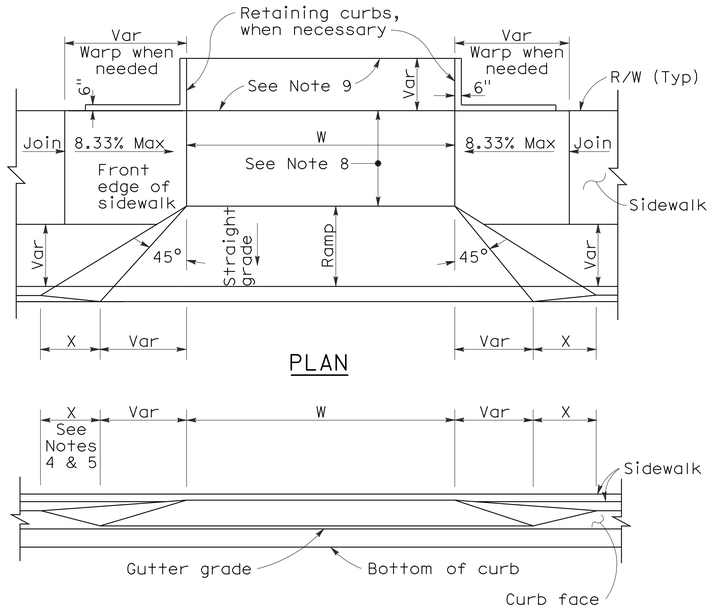

PLAN

ELEVATION

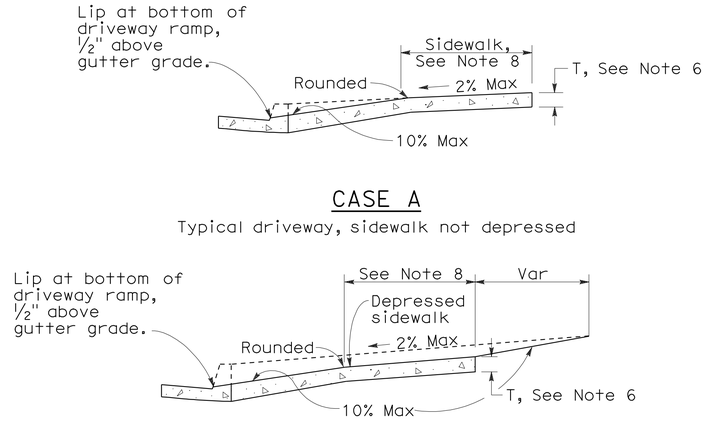

CASE A

Typical driveway, sidewalk not depressed

CASE B

Driveway with depressed sidewalk

SECTIONS

CURB QUANTITIES

TYPE	CUBIC YARDS PER LINEAR FOOT
A1-6	0.02585
A1-8	0.03084
A2-6	0.05903
A2-8	0.06379
A3-6	0.01036
A3-8	0.01435
B1-4	0.02185
B1-6	0.02930
B2-4	0.05515
B2-6	0.06171
B3-4	0.00641
B3-6	0.01074
B4	0.05709
D-4	0.04083
D-6	0.06804
E	0.06661

TABLE A

CURB TYPE	DIMENSIONS "H1"	"H2"	"W1"	"W2"
A1-6	1'-2"	6"	7½"	1½"
A1-8	1'-4"	8"	8"	2"
A2-6	1'-0"	6"	2'-7½"	1½"
A2-8	1'-2"	8"	2'-8"	2"
A3-6	6"	5"	7¼"	1¼"
A3-8	8"	7"	7¾"	1¾"
B1-4	1'-0"	4"	7½"	2½"
B1-6	1'-2"	6"	9"	4"
B2-4	10"	4"	2'-7½"	2½"
B2-6	1'-0"	6"	2'-9"	4"
B3-4	4"	3"	7"	2"
B3-6	6"	5"	8½"	3½"
D-4	10"	4"	1'-6"	1'-1"
D-6	1'-0"	6"	2'-2"	1'-8"

DRIVEWAYS

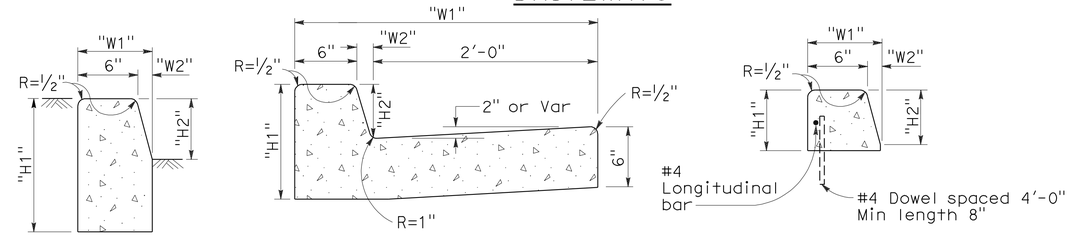

TYPE A1 CURBS
See Table A

TYPE A2 CURBS
See Table A

TYPE A3 CURBS
Superimposed on existing pavement
See Table A

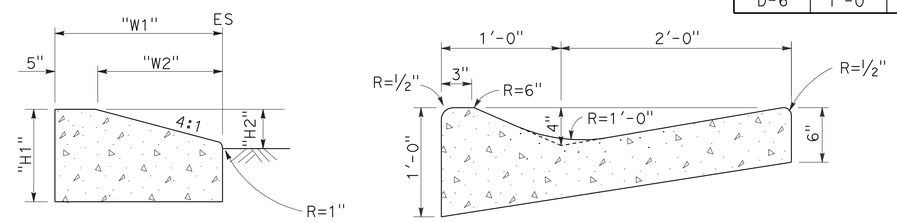

TYPE D CURBS
See Table A

TYPE E CURB

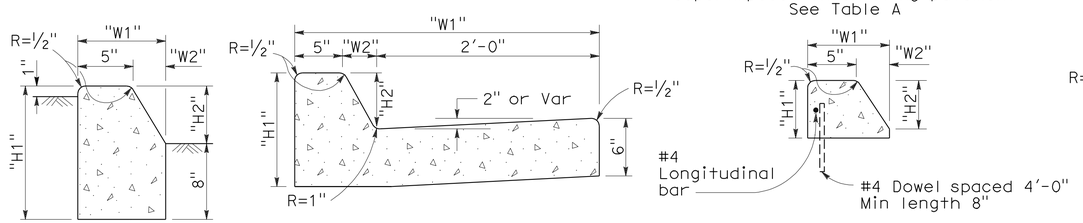

TYPE B1 CURBS
See Table A

TYPE B2 CURBS
See Table A

TYPE B3 CURBS
Superimposed on existing pavement
See Table A

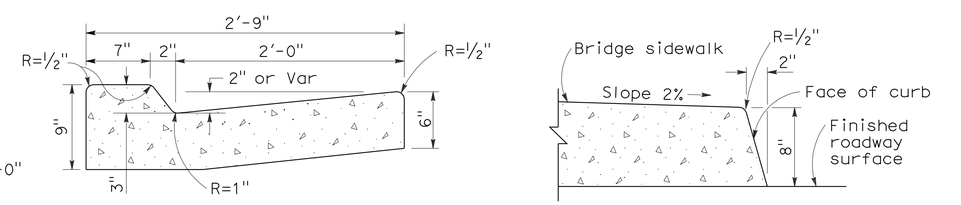

TYPE B4 CURBS

TYPE H CURB
On Bridges

CURBS

NOTES:

1. Case A driveway section typically applies.
2. Use Case B driveway section when ramp slopes would exceed 10% in Case A.
3. Use Case B driveway section when sidewalk cross slope would exceed 2% in Case A.
4. X=3'-0" except for curb heights over 10" where 4:1 slopes shall be used on curb slope.
5. X is a variable when sidewalk is located where wheelchairs may traverse the surface. Slopes shall not exceed 8.33%.
6. Sidewalk and ramp thickness "T" at driveway shall be 4" for residental and 6" for commercial.
7. Difference in slope of the driveway ramp and the slope of a line between the gutter and a point on the roadway 5'-0" from gutter line shall not exceed 15%. Reduce driveway ramp slope, not gutter slope, where required.
8. Minimum width of clear passageway for sidewalk shall be 4'-0".
9. Retaining curbs and acquisition of construction easement may be necessary for narrow sidewalks or curb heights in excess of 6".
10. Across the pedestrian route at curb ramp locations, the gutter pan slope shall not exceed 1" of depth for each 2'-0" of width.

STATE OF CALIFORNIA
DEPARTMENT OF TRANSPORTATION

CURBS AND DRIVEWAYS

NO SCALE

RSP A87A DATED NOVEMBER 17, 2006 SUPERSEDES STANDARD PLAN A87A DATED MAY 1, 2006 - PAGE 113 OF THE STANDARD PLANS BOOK DATED MAY 2006.

REVISED STANDARD PLAN RSP A87A

2006 REVISED STANDARD PLAN RSP A87A

10-25-06

DIST	COUNTY	ROUTE	POST MILES TOTAL PROJECT	SHEET NO.	TOTAL SHEETS
04	Mrn	1	15.0/17.0	37	50

REGISTERED CIVIL ENGINEER

June 5, 2009
PLANS APPROVAL DATE

REGISTERED PROFESSIONAL ENGINEER Glenn DeCou No. C34547 Exp. 9-30-09 CIVIL STATE OF CALIFORNIA

The State of California or its officers or agents shall not be responsible for the accuracy or completeness of electronic copies of this plan sheet.

To accompany plans dated 6-14-10

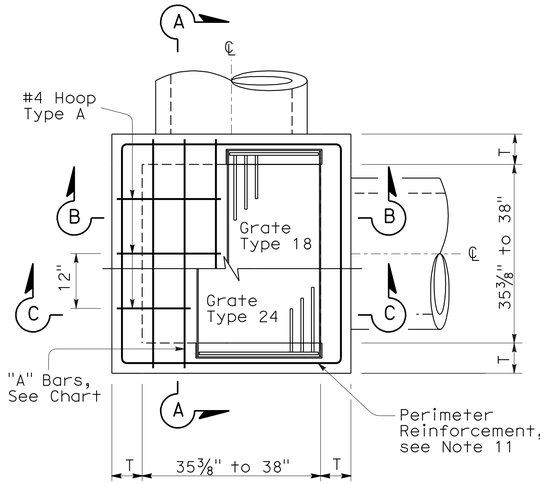

STANDARD TYPE G2 OR G4

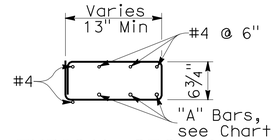

TYPICAL SECTION
(HOOP TYPE A)

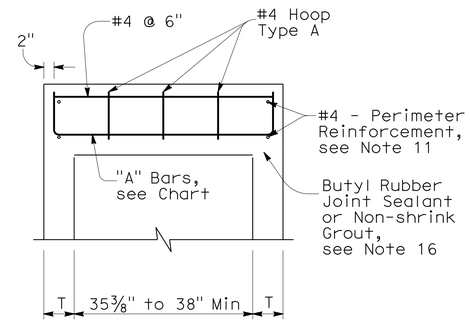

SECTION A-A

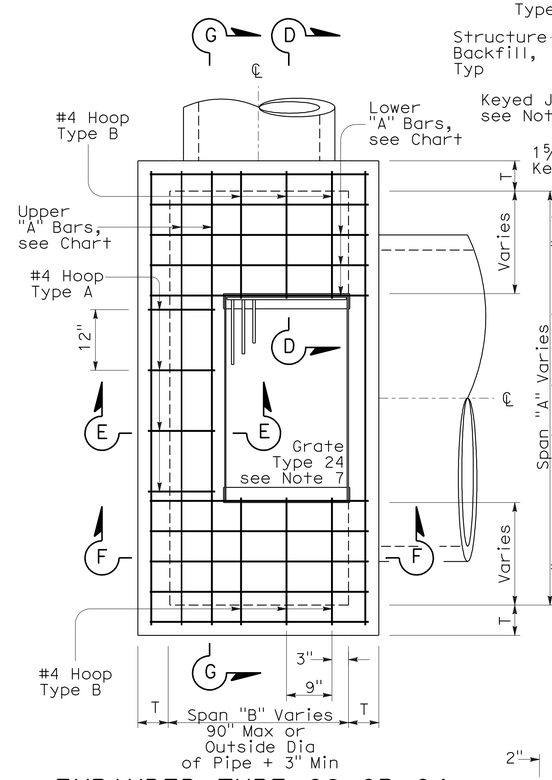

EXPANDED TYPE G2 OR G4
(Top Rebar Not Shown)

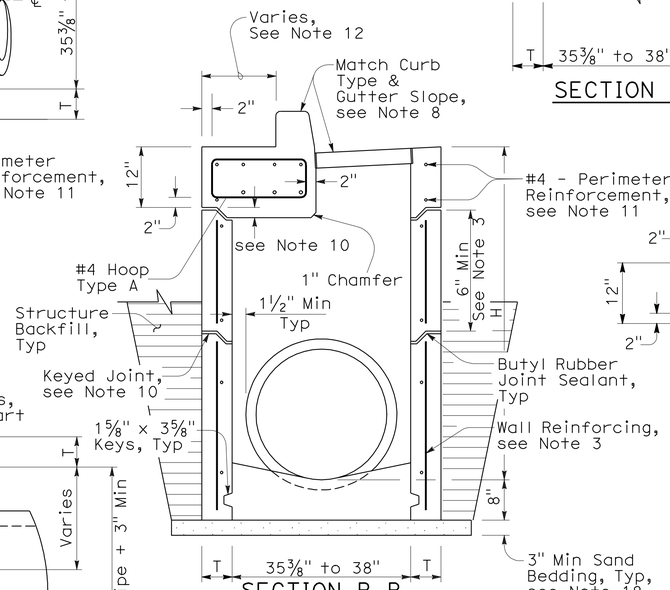

SECTION B-B
(with G4 Top)

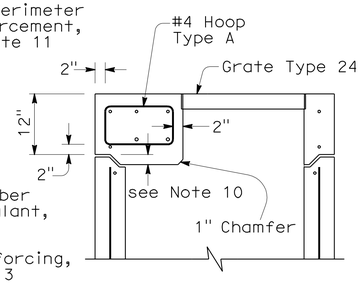

SECTION C-C
(with G2 Top)

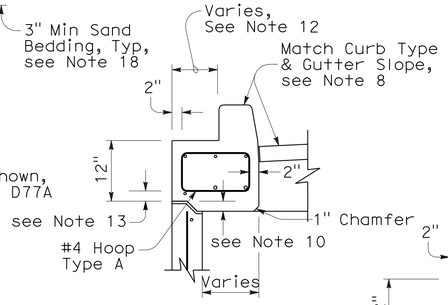

SECTION E-E
(with G4 Top)

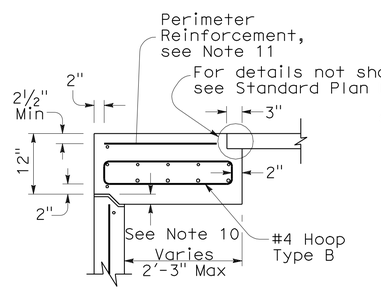

SECTION D-D

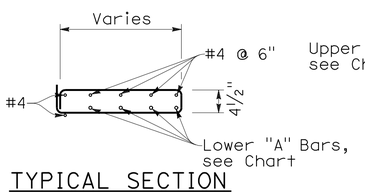

TYPICAL SECTION
(HOOP TYPE B)

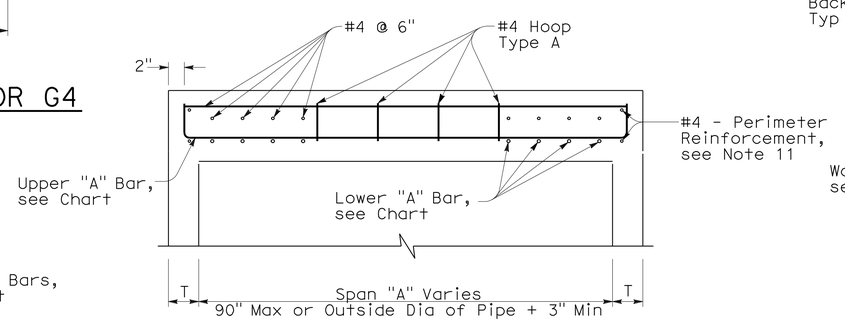

SECTION G-G

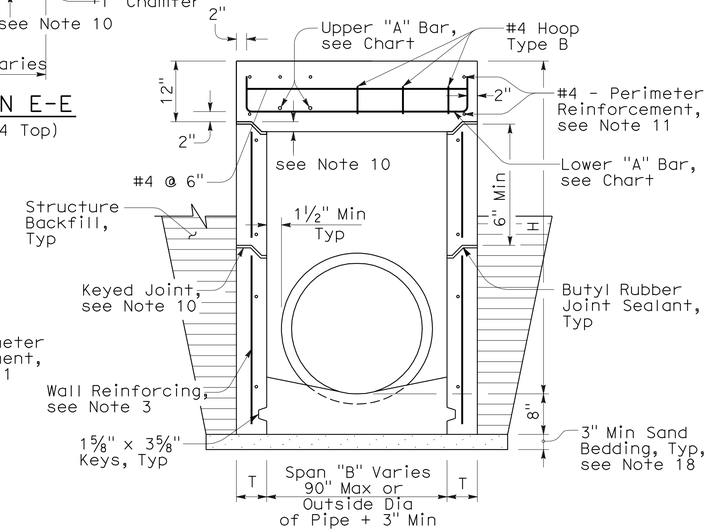

SECTION F-F
(with G2 Top)

NOTES:

1. "H" is the difference in elevation between the outlet pipe flow line and the normal gutter grade line undepressed.
2. For "T" wall thickness: T=6" when "H" is 8' or less. T=8" when "H" is over 8'.
3. Wall reinforcing not required when "H" is 8' or less and the unsupported width or length is 6'-0" or less. Reinforce wall exceeding these limits with #4 bars @ 1'-6" ± centers placed 2" clear to the inside of inlet unless otherwise shown. Short independent wall sections or height adjustment rings 6" to 24" high must have a minimum of two #4 horizontal bars.
4. Seal pre-cast inlets connection openings between wall and pipe with non-shrink grout or resilient connectors as specified in the Special Provisions.
5. Steps - None required where "H" is less than 2'-6". Where "H" is 2'-6" or more, install steps with lowest rung 1'-0" above the floor and highest rung not more than 6" below bottom of lid. The distance between steps must not exceed 1'-0" and be uniform throughout the length of the wall. Place steps in the wall without an opening. Steps inserts may be substituted for the bar steps. Step inserts must comply with State Industrial Safety Requirements. See Standard Plan D74C for step details.
6. Pipe(s) can be placed in any wall.
7. Set inlet so that grate bars are parallel to direction of principal surface flow.
8. Type G4 inlet can use Grate Type 18 or 24. Type G2 inlet uses Grate Type 24. See Revised Standard Plan RSP D77A and Standard Plan D77B for grate and frame details and weights of miscellaneous Iron and Steel.
9. G4 inlet details are the same as the G2 with the addition of a curb and sloped grate that matches the adjacent curb and gutter depression. See Standard Plans D78A & D78B for gutter and inlet depresssion details. See Revised Standard Plan RSP A87A & Standard Plan A87B for Curb and Dike Details.
10. Provide pre-cast inlets with separate top sections for final grade adjustment under Standard Specifcation Section 51-1.02. Provide keyed joints between the top and wall and multiple wall sections. Joint design may vary but must be 1" to 3" in depth.
11. Perimeter reinforcement serves as a rigid frame to position and attach the required structural reinforcement and may be tack welded at outer corners when using ASTM A706 weldable bars.
12. This dimension will vary with different grates, curbs types, box width and wall thickness.
13. 2" unless inlet is expanded in the Span "A" direction, then clearance is 2" plus the diameter of the lower "A" bar.
14. Place "A" Bars at an angle so hooked ends will maintain 2" clear coverage.
15. Refer to Standard Plan D73, Table A for concrete quantities.
16. Non-shrink grout can be used for upper most joint to facilitate final top grade adjustment.
17. Slope inlet floors 4:1 towards the outlet pipe. Pre-cast inlets may have monolithic sloped floors, flat floors, or no floors in which case a sloped floor must be cast in the field. Inlet floors do not require reinforcing.
18. Extend sand bedding under all structure backfill.

TOP REINFORCEMENT CHART

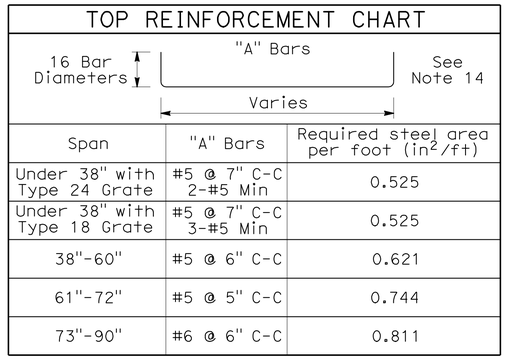

Span	"A" Bars	Required steel area per foot (in^2/ft)
Under 38" with Type 24 Grate	#5 @ 7" C-C 2-#5 Min	0.525
Under 38" with Type 18 Grate	#5 @ 7" C-C 3-#5 Min	0.525
38"-60"	#5 @ 6" C-C	0.621
61"-72"	#5 @ 5" C-C	0.744
73"-90"	#6 @ 6" C-C	0.811

STATE OF CALIFORNIA
DEPARTMENT OF TRANSPORTATION

DRAINAGE INLETS (PRECAST)

NO SCALE

NSP D73A DATED JUNE 5, 2009 SUPPLEMENTS THE STANDARD PLANS BOOK DATED MAY 2006.

NEW STANDARD PLAN NSP D73A

2006 NEW STANDARD PLAN NSP D73A

3-16-09

DIST	COUNTY	ROUTE	POST MILES TOTAL PROJECT	SHEET NO.	TOTAL SHEETS
04	Mrn	1	15.0/17.0	38	50

Raymond Don Tsztoo
REGISTERED CIVIL ENGINEER

January 18, 2008
PLANS APPROVAL DATE

REGISTERED PROFESSIONAL ENGINEER
Raymond Don Tsztoo
No. C37332
Exp. 6-30-08
CIVIL
STATE OF CALIFORNIA

The State of California or its officers or agents shall not be responsible for the accuracy or completeness of electronic copies of this plan sheet.

To accompany plans dated 6-14-10

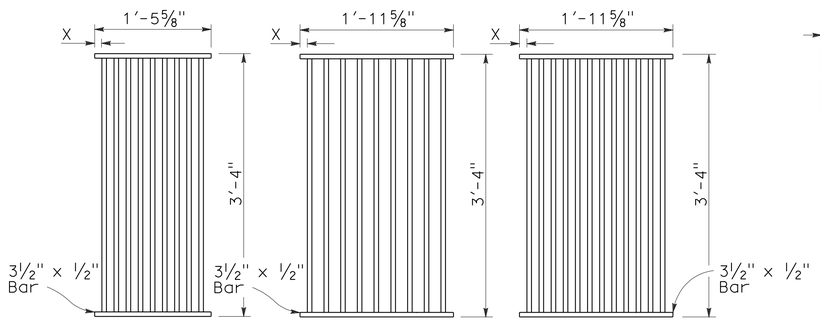

TYPE 18-9

1⅜" Clear spacing. Use within the roadbed on highways where bicycles and pedestrians are excluded.

TYPE 24-9

2" Clear spacing. Use in locations off the roadbed on all types of highways.

TYPE 24-12

1⅜" Clear spacing. Use within the roadbed on highways where bicycles and pedestrians are excluded.

RECTANGULAR GRATE DETAILS

(See table below)

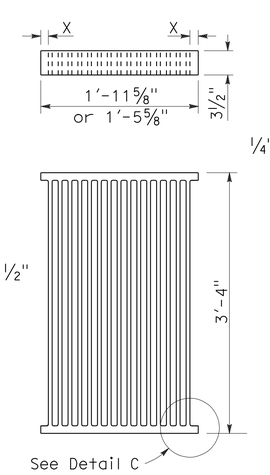

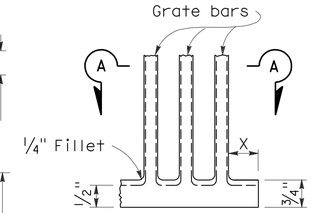

DETAIL C

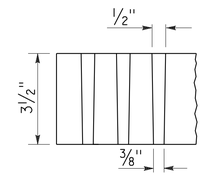

SECTION A-A

ALTERNATIVE CAST NODULAR IRON GRATE OR CAST STEEL GRATE

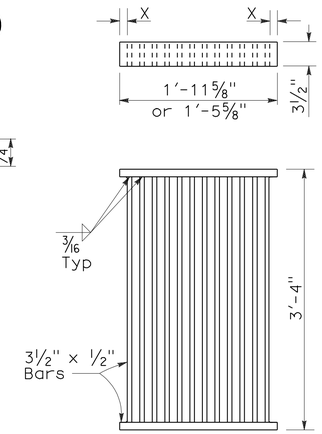

ALTERNATIVE WELDED GRATE

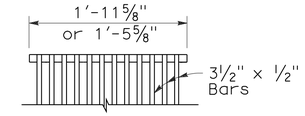

CAST END BLOCK

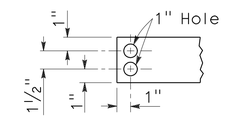

END OF BAR

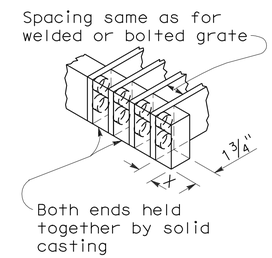

ALTERNATIVE CAST NODULAR IRON OR CAST STEEL END BLOCK GRATE

NOTES:

1. Grate type numbers refer to approximate width of grate in inches and number of bars, respectively.
2. Contractor has the option of using cast nodular iron, cast steel, welded, bolted, or cast end block grate.
3. See Special Provisions for requirements pertaining to galvanizing or asphalt dipping of grates and frames.
4. Rounded top of bars optional on all grates.
5. Pipe inlets with a grate shall be placed so that bars parallel direction of principle surface flow.
6. Full penetration butt welds may be substituted for the fillet welds on all anchors.
7. Standard square, hexagon, round or equivalent headed anchors may be substituted for the right angle hooks on the anchors shown on this plan.
8. Grate and frame weights are based on welded grates (weights of face angles, steps, protection bars, etc. are not included).

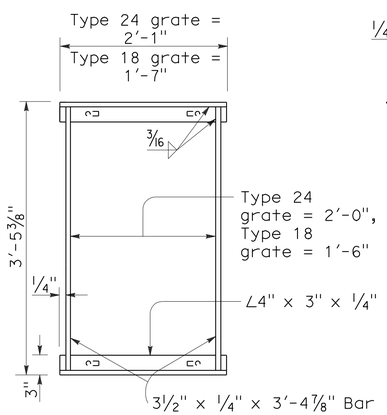

TYPICAL FRAME

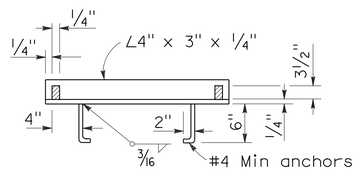

CROSS SECTION

(Thru frame)

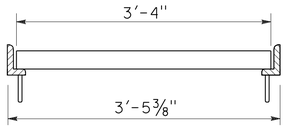

LONGITUDINAL SECTION

(Thru frame and grate)

RECTANGULAR FRAME DETAILS

(For all rectangular grates)

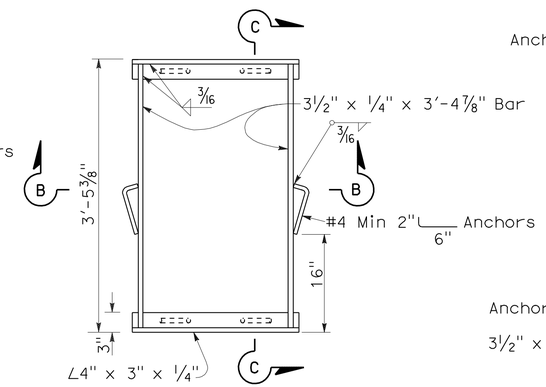

TYPICAL FRAME

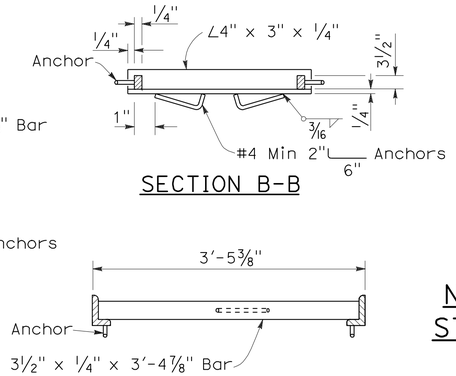

SECTION B-B

SECTION C-C

ALTERNATIVE ANCHOR FOR RECTANGULAR FRAME

(For details not shown, See Rectangular Frame Details)

INLET TYPE	GRATE TYPE	No. OF GRATES	WEIGHT LB
GDO	24-12	2	634
GOL-7	24-12	1	326
GOL-10	24-12	1	326
GO,G1,G2,G3,G4 (TYPE 24)	24-9	1	263
	24-12	1	326
G4 (TYPE 18),G5,G6	18-9	1	249
GT1	18-9	2	498
GT2	18-9	2	498
GT3	24-12	2	652
GT4	24-12	2	652
TRASH RACK			22

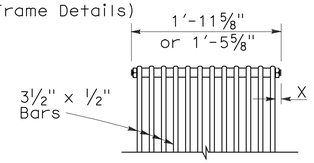

BOLTED END BLOCK

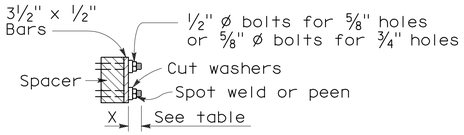

BOLTING DETAIL

ALTERNATIVE BOLTED GRATE

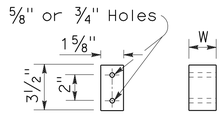

BAR SPACER

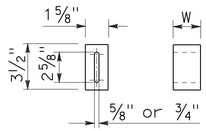

ALTERNATIVE SPACER

W = 1⅜" or 2"

GRATE BAR SPACING TABLE

TYPE	No. OF BARS	CLEAR BAR SPACING	X
18-9	9	1⅜"	1 1/16"
24-9	9	2"	1 9/16"
24-12	12	1⅜"	1¼"

INLET TYPE	COVER TYPE	WEIGHT LB
OS	PLATE	174
OL-7	PLATE	170
OL-10	PLATE	170
OL-14	PLATE	170
OL-21	PLATE	170
OCP	PLATE	112
OCPI	PLATE	112
OCPI	REDWOOD	42
OMP	PLATE	177
OMPI	PLATE	177

BASIS FOR MISC IRON & STEEL FINAL PAY WEIGHTS FOR DRAINAGE INLETS

(See General Notes, No 8)

STATE OF CALIFORNIA
DEPARTMENT OF TRANSPORTATION

GRATE DETAILS

NO SCALE

RSP D77A DATED JANUARY 18, 2008 SUPERSEDES STANDARD PLAN D77A DATED MAY 1, 2006 - PAGE 155 OF THE STANDARD PLANS BOOK DATED MAY 2006.

REVISED STANDARD PLAN RSP D77A

2006 REVISED STANDARD PLAN RSP D77A

12-14-07

DIST	COUNTY	ROUTE	POST MILES TOTAL PROJECT	SHEET NO.	TOTAL SHEETS
04	Mrn	1	15.0/17.0	39	50

LICENSED LANDSCAPE ARCHITECT

April 3, 2009
PLANS APPROVAL DATE

The State of California or its officers or agents shall not be responsible for the accuracy or completeness of electronic copies of this plan sheet.

LICENSED LANDSCAPE ARCHITECT
Gregory A. Balzer 3878
Gregory A. Balzer
Licensed Landscape Architect
02-28-11
Renewal Date
03-04-09
Date
STATE OF CALIFORNIA

To accompany plans dated 6-14-10

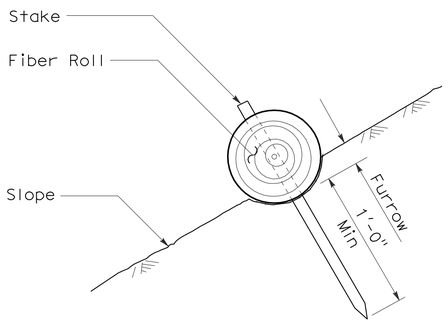

SECTION

FIBER ROLL
(TYPE 1)

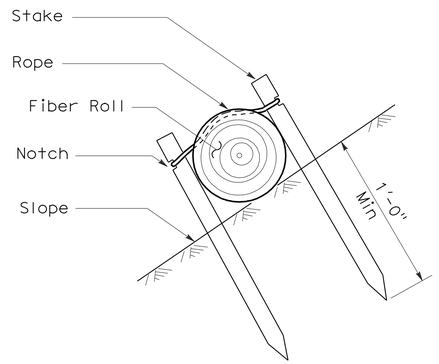

SECTION

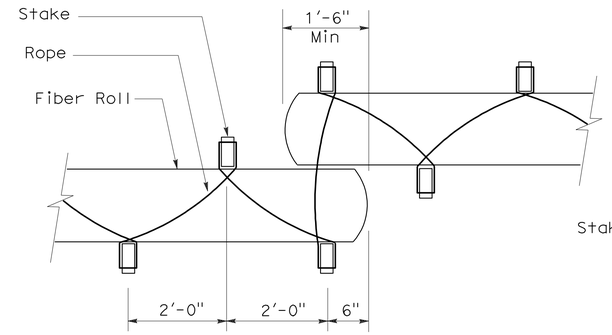

PLAN

FIBER ROLL
(TYPE 2)

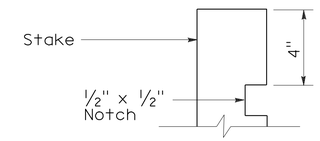

ELEVATION

STAKE NOTCH DETAIL

NOTES:

1. Fiber roll spacing varies depending upon slope inclination.
2. Installations shown in the perspectives are for slope inclination of 10:1 and steeper.

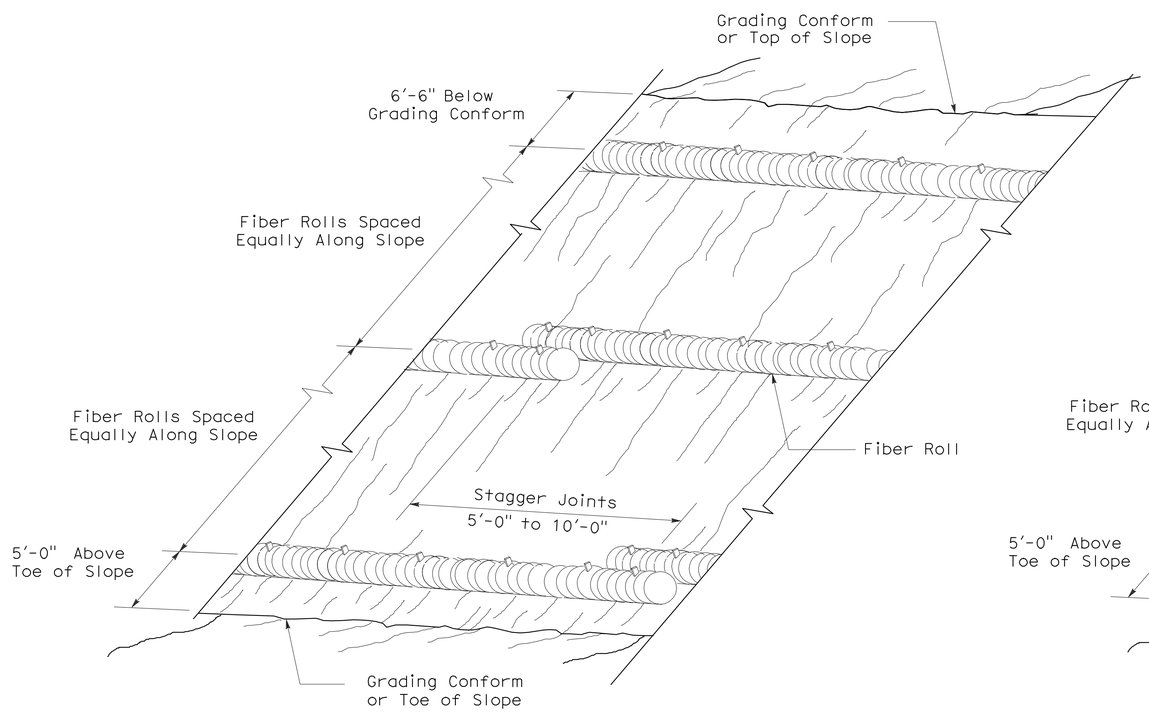

PERSPECTIVE

FIBER ROLL (TYPE 1)

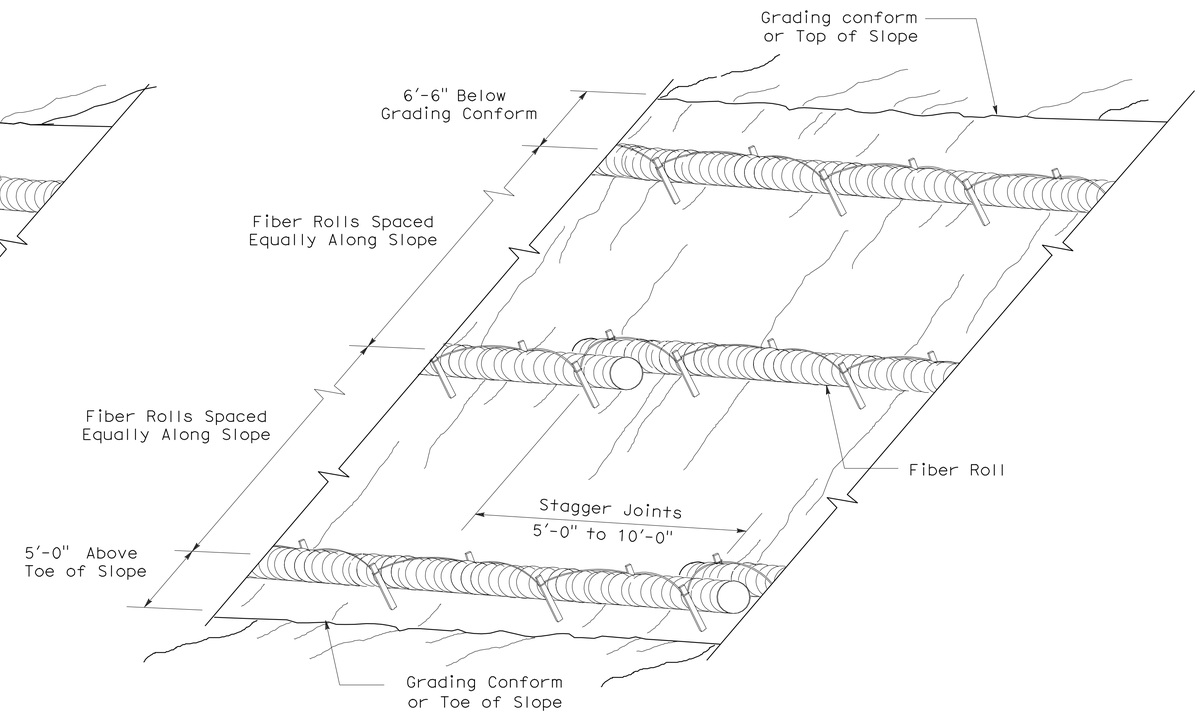

PERSPECTIVE

FIBER ROLL (TYPE 2)

STATE OF CALIFORNIA
DEPARTMENT OF TRANSPORTATION

EROSION CONTROL DETAILS (FIBER ROLL)

NO SCALE

RNSP H51 DATED APRIL 3, 2009 SUPERSEDES NSP H51 DATED DECEMBER 1, 2006 THAT SUPPLEMENTS THE STANDARD PLANS BOOK DATED MAY 2006.

REVISED NEW STANDARD PLAN RNSP H51

2006 REVISED NEW STANDARD PLAN RNSP H51

3-4-09

DIST	COUNTY	ROUTE	POST MILES TOTAL PROJECT	SHEET NO.	TOTAL SHEETS
04	Mrn	1	15.0/17.0	40	50

Gregory A. Balzer
LICENSED LANDSCAPE ARCHITECT

June 5, 2009
PLANS APPROVAL DATE

LICENSED LANDSCAPE ARCHITECT
Gregory A. Balzer 2572
Gregory A. Balzer
6-9-09
Signature
2-28-11
Renewal Date
5-14-09
Date
STATE OF CALIFORNIA

The State of California or its officers or agents shall not be responsible for the accuracy or completeness of electronic copies of this plan sheet.

To accompany plans dated 6-14-10

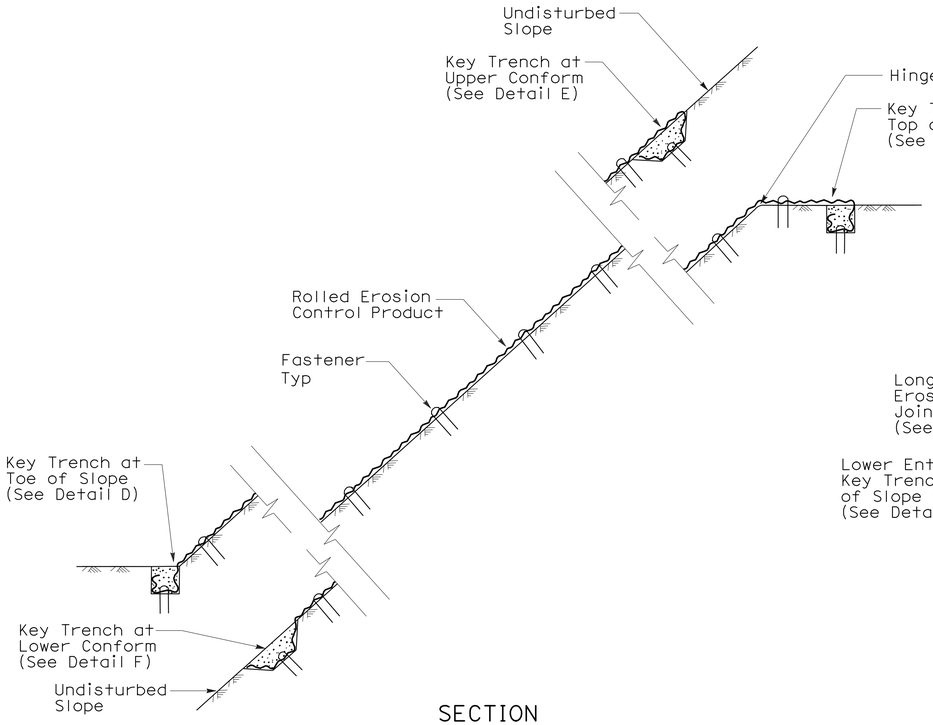

SECTION

ROLLED EROSION CONTROL PRODUCT ON SLOPE WITH VARIOUS KEY ENTRENCHMENTS

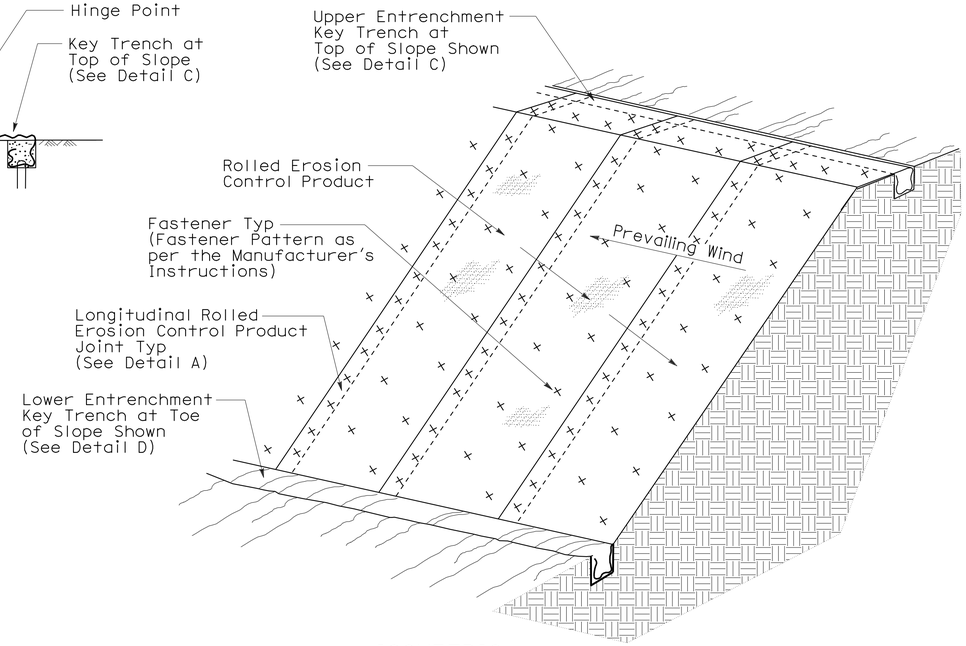

ISOMETRIC

ROLLED EROSION CONTROL PRODUCT ON SLOPE

NOTE:

1. Fiber Roll/Compost Sock shown for reference purposes only.
2. If transverse rolled erosion control product joints are required on slopes, see Detail B.

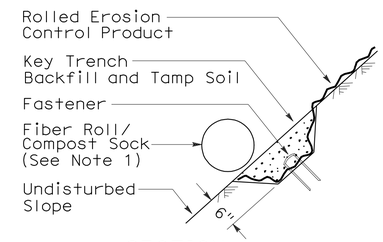

SECTION

DETAIL F
KEY TRENCH AT LOWER CONFORM

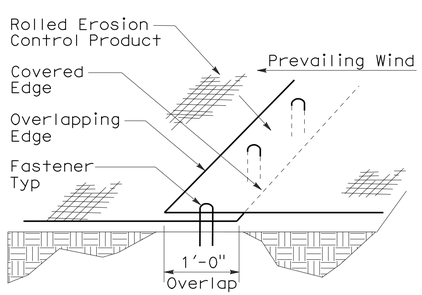

PERSPECTIVE

DETAIL A
LONGITUDINAL ROLLED EROSION CONTROL PRODUCT JOINT

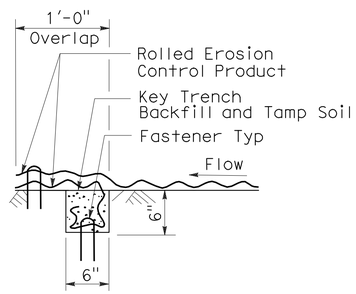

SECTION

DETAIL B
TRANSVERSE ROLLED EROSION CONTROL PRODUCT JOINT

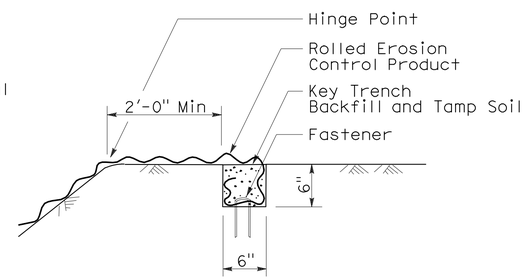

SECTION

DETAIL C
KEY TRENCH AT TOP OF SLOPE

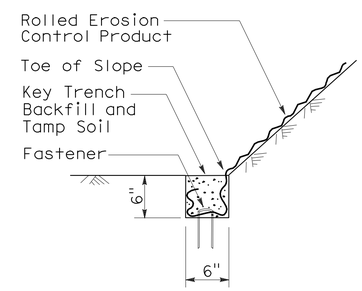

SECTION

DETAIL D
KEY TRENCH AT TOE OF SLOPE

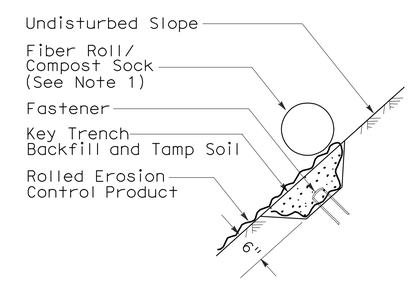

SECTION

DETAIL E
KEY TRENCH AT UPPER CONFORM

STATE OF CALIFORNIA
DEPARTMENT OF TRANSPORTATION

ROLLED EROSION CONTROL PRODUCT

NO SCALE

NSP H53 DATED JUNE 5, 2009 SUPPLEMENTS
THE STANDARD PLANS BOOK DATED MAY 2006.

NEW STANDARD PLAN NSP H53

2006 NEW STANDARD PLAN NSP H53

DIST	COUNTY	ROUTE	POST MILES TOTAL PROJECT	SHEET NO.	TOTAL SHEETS
04	Mrn	1	15.0/17.0	41	50

Randell D. Hiatt
REGISTERED CIVIL ENGINEER

June 6, 2008
PLANS APPROVAL DATE

REGISTERED PROFESSIONAL ENGINEER
Randell D. Hiatt
No. C50200
Exp. 6-30-09
CIVIL
STATE OF CALIFORNIA

The State of California or its officers or agents shall not be responsible for the accuracy or completeness of electronic copies of this plan sheet.

To accompany plans dated 6-14-10

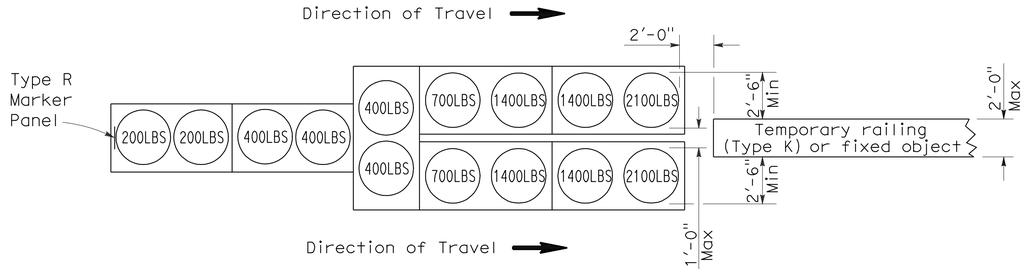

ARRAY 'TU14'

Approach speed 45 mph or more

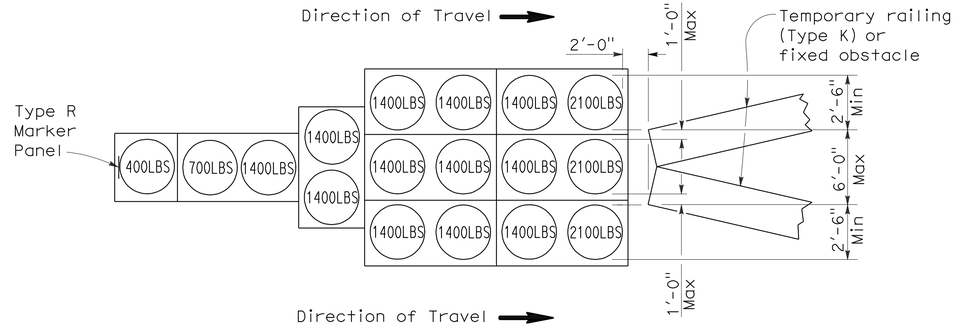

ARRAY 'TU17'

Approach speed less than 45 mph

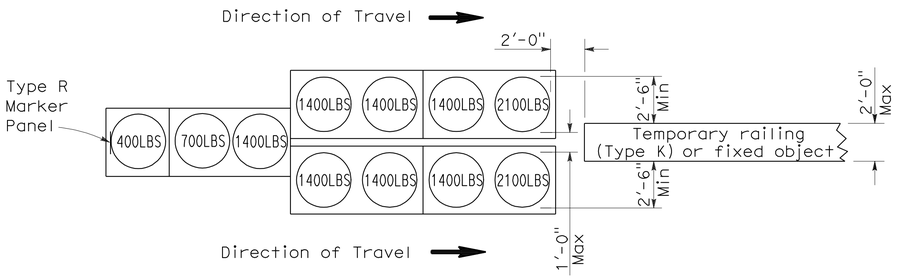

ARRAY 'TU11'

Approach speed less than 45 mph

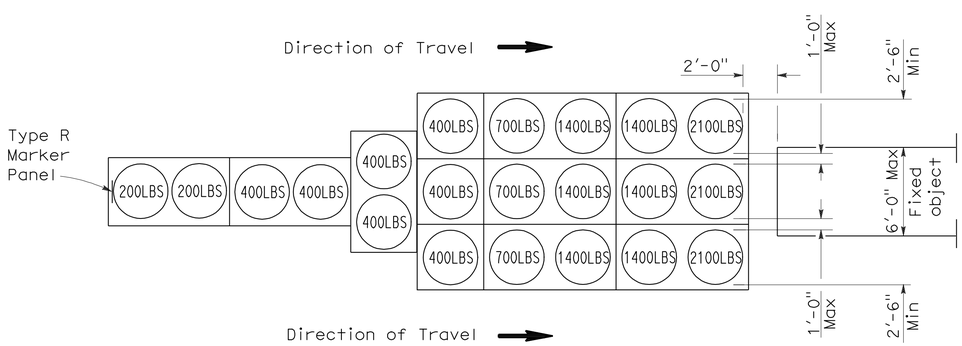

ARRAY 'TU21'

Approach speed 45 mph or more

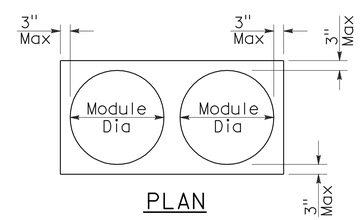

PLAN

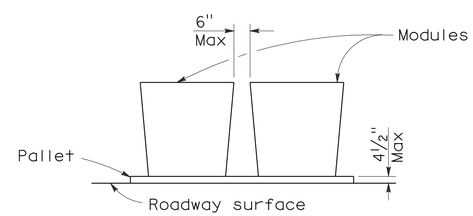

ELEVATION

CRASH CUSHION PALLET DETAIL

See Note 7

NOTES:

1. (XXX) Indicates sand filled module location and weight of sand in pounds for each module. Module spacing is based on the greater diameter of the module.
2. All sand weights are nominal.
3. Temporary crash cushion arrays shall not encroach on the traveled way.
4. Place the top of Type R marker panel 1" below the module lid.
5. Refer to Standard Plan A73B for marker details.
6. Approach speeds indicated conform to NCHRP 350 Report criteria.
7. Use of pallets is optional.

STATE OF CALIFORNIA
DEPARTMENT OF TRANSPORTATION

TEMPORARY CRASH CUSHION, SAND FILLED (UNIDIRECTIONAL)

NO SCALE

RSP T1A DATED JUNE 6, 2008 SUPERSEDES STANDARD PLAN T1A
DATED MAY 1, 2006 - PAGE 211 OF THE STANDARD PLANS BOOK DATED MAY 2006.

REVISED STANDARD PLAN RSP T1A

2006 REVISED STANDARD PLAN RSP T1A

DIST	COUNTY	ROUTE	POST MILES TOTAL PROJECT	SHEET NO.	TOTAL SHEETS
04	Mrn	1	15.0/17.0	42	50

Randell D. Hiatt
REGISTERED CIVIL ENGINEER

June 6, 2008
PLANS APPROVAL DATE

REGISTERED PROFESSIONAL ENGINEER
Randell D. Hiatt
No. C50200
Exp. 6-30-09
CIVIL
STATE OF CALIFORNIA

The State of California or its officers or agents shall not be responsible for the accuracy or completeness of electronic copies of this plan sheet.

To accompany plans dated 6-14-10

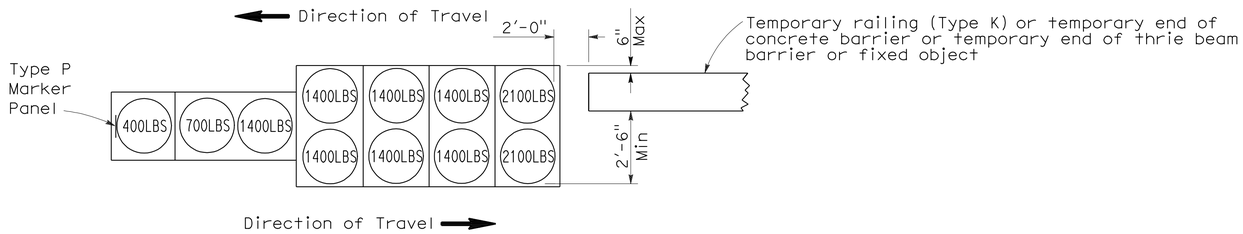

ARRAY 'TB11'

Approach speed less than 45 mph

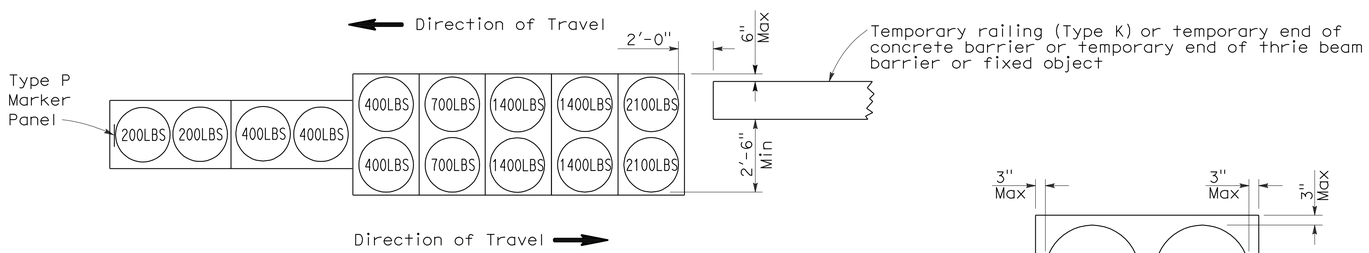

ARRAY 'TB14'

Approach speed 45 mph or more

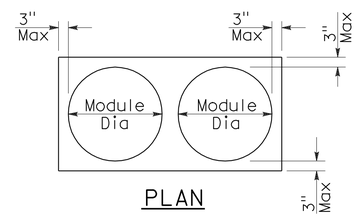

PLAN

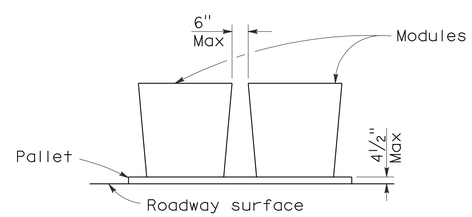

ELEVATION

CRASH CUSHION PALLET DETAIL

See Note 7

NOTES:

1. (XXX) Indicates sand filled module location and weight of sand in pounds for each module. Module spacing is based on the greater diameter of the module.
2. All sand weights are nominal.
3. Temporary crash cushion arrays shall not encroach on the traveled way.
4. Place the Type P marker panel so that the bottom of the panel rests upon the pallet.
5. Refer to Standard Plan A73B for marker details.
6. Approach speeds indicated conform to NCHRP 350 Report criteria.
7. Use of pallets is optional.

STATE OF CALIFORNIA
DEPARTMENT OF TRANSPORTATION

TEMPORARY CRASH CUSHION, SAND FILLED (BIDIRECTIONAL)

NO SCALE

RSP T1B DATED JUNE 6, 2008 SUPERSEDES STANDARD PLAN T1B
DATED MAY 1, 2006 - PAGE 212 OF THE STANDARD PLANS BOOK DATED MAY 2006.

REVISED STANDARD PLAN RSP T1B

2006 REVISED STANDARD PLAN RSP T1B

5-15-08

DIST	COUNTY	ROUTE	POST MILES TOTAL PROJECT	SHEET NO.	TOTAL SHEETS
04	Mrn	1	15.0/17.0	43	50

Randell D. Hiatt
REGISTERED CIVIL ENGINEER

June 6, 2008
PLANS APPROVAL DATE

REGISTERED PROFESSIONAL ENGINEER
Randell D. Hiatt
No. C50200
Exp. 6-30-09
CIVIL
STATE OF CALIFORNIA

The State of California or its officers or agents shall not be responsible for the accuracy or completeness of electronic copies of this plan sheet.

To accompany plans dated 6-14-10

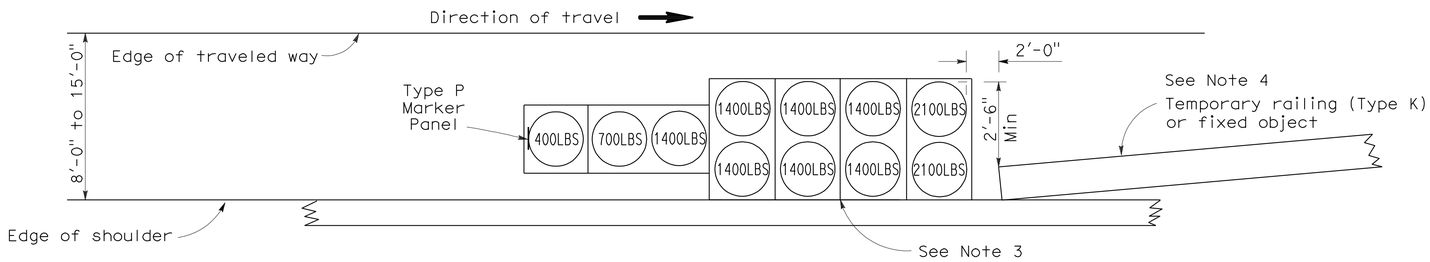

ARRAY 'TS11'

Approach speed less than 45 mph
See Note 9

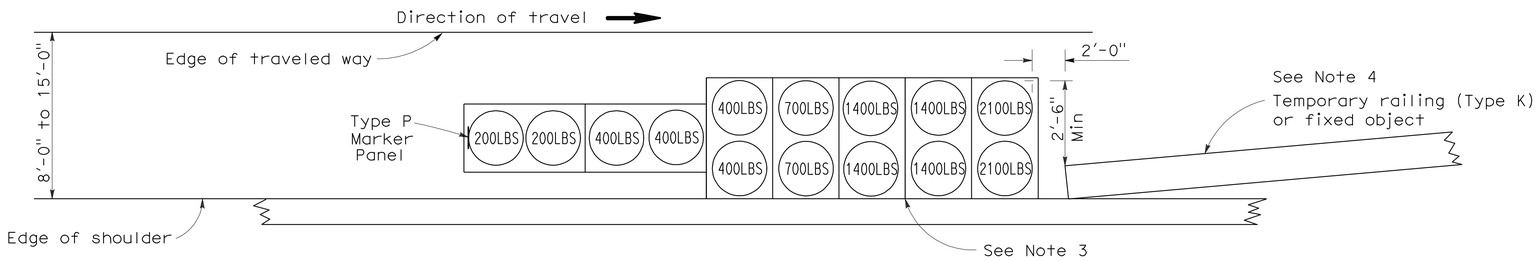

ARRAY 'TS14'

Approach speed 45 mph or more
See Note 9

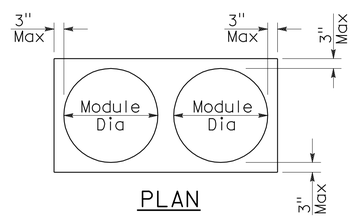

PLAN

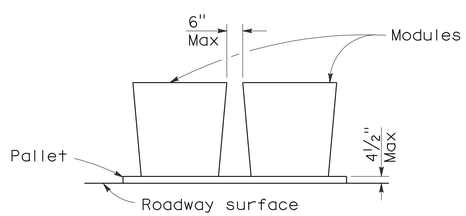

ELEVATION

CRASH CUSHION PALLET DETAIL

See Note 11

NOTES:

1. (XXX) Indicates sand filled module location and weight of sand in pounds for each module. Module spacing is based on the greater diameter of the module.
2. All sand weights are nominal.
3. The temporary crash cushion arrays shown on this plan shall be used only in locations where there will be traffic on one side of the temporary crash cushion array.
4. If the fixed object or approach end of the temporary railing is less than 15'-0" from the edge of traveled way, a temporary crash cushion is required in a construction or work zone.
5. Temporary crash cushion arrays shall not encroach on the traveled way.
6. Arrays for median shoulders shall conform to details shown on this plan for outside shoulders.
7. Place the Type P marker panel so that the bottom of the panel rests upon the pallet and faces traffic.
8. Refer to Standard Plan A73B for marker details.
9. For shoulder widths less than 8'-0", appropriate approved crash cushion protection, other than sand filled modules, shall be provided at fixed objects and at approach ends of temporary railing. The specific type of crash cushion shall be as shown on the project plans or as specified in the Special Provisions, or if not shown on the project plans or specified in the Special Provisions, shall be as approved by the Engineer.
10. Approach speeds indicated conform to NCHRP 350 Report criteria.
11. Use of pallets is optional.

STATE OF CALIFORNIA
DEPARTMENT OF TRANSPORTATION

TEMPORARY CRASH CUSHION, SAND FILLED (SHOULDER INSTALLATIONS)

NO SCALE

RSP T2 DATED JUNE 6, 2008 SUPERSEDES STANDARD PLAN T2
DATED MAY 1, 2006 - PAGE 213 OF THE STANDARD PLANS BOOK DATED MAY 2006.

REVISED STANDARD PLAN RSP T2

2006 REVISED STANDARD PLAN RSP T2

5-15-08

DIST	COUNTY	ROUTE	POST MILES TOTAL PROJECT	SHEET NO.	TOTAL SHEETS
04	Mrn	1	15.0/17.0	44	50

REGISTERED CIVIL ENGINEER

November 17, 2006
PLANS APPROVAL DATE

REGISTERED PROFESSIONAL ENGINEER
Greg W. Edwards
No. C36386
Exp. 6-30-08
CIVIL
STATE OF CALIFORNIA

The State of California or its officers or agents shall not be responsible for the accuracy or completeness of electronic copies of this plan sheet.

To accompany plans dated 6-14-10

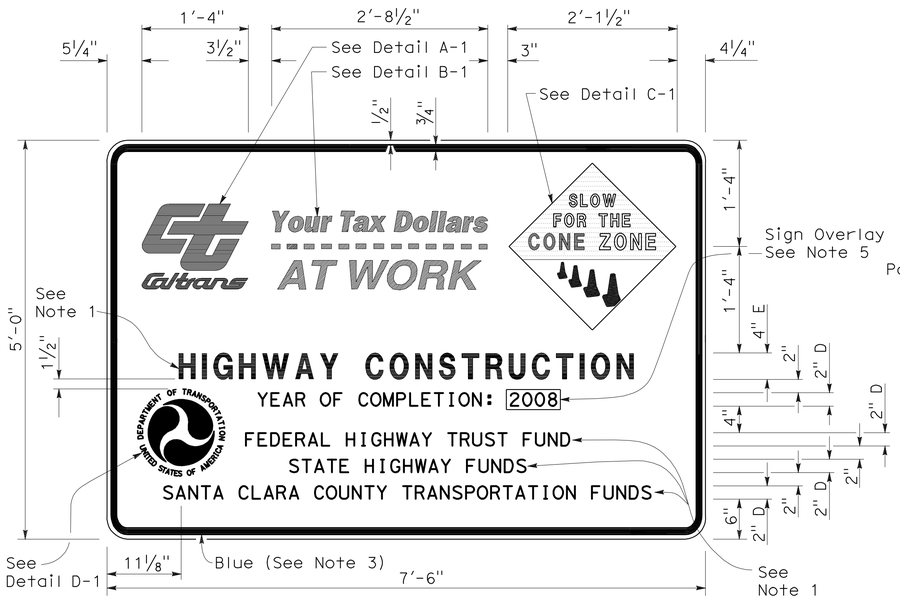

TYPE 1

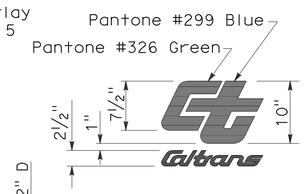

DETAIL A-1

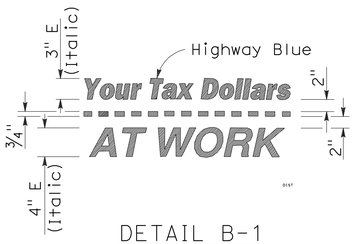

DETAIL B-1
(See Note 3)

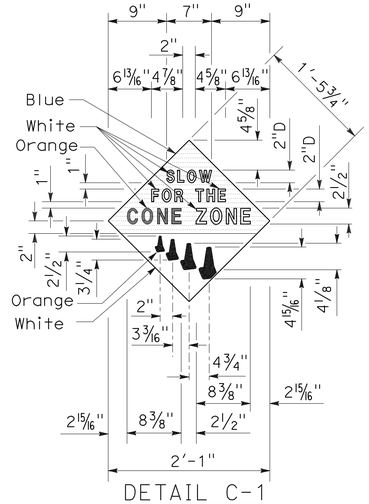

DETAIL C-1
(See Note 4)

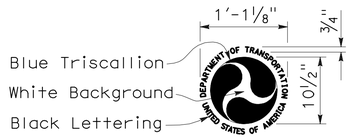

DETAIL D-1
(See Note 6)

NOTES:

1. The sign messages shown for type of project and fund types are examples only. See the Special Provisions for the applicable type of project and fund type messages to be used.
2. Except as otherwise shown, the legend of sign shall be black on a white background (non-reflective).
3. The border of the signs and details "B-1" and "B-2" shall be blue (non-reflective).
4. The diamond in details "C-1" and "C-2" shall be blue for the background of message, " SLOW FOR THE CONE ZONE", and white background for the orange cones. The color and type of font for the "SLOW FOR THE CONE ZONE" message shall be: "SLOW" white D; "FOR THE" white D; "CONE" orange Arial font; "ZONE" white Arial font.
5. Year of completion of project construction shown on the overlay is an example only. See the Special Provisions.
6. Use when the Project involves Federal Highway Trust Fund.

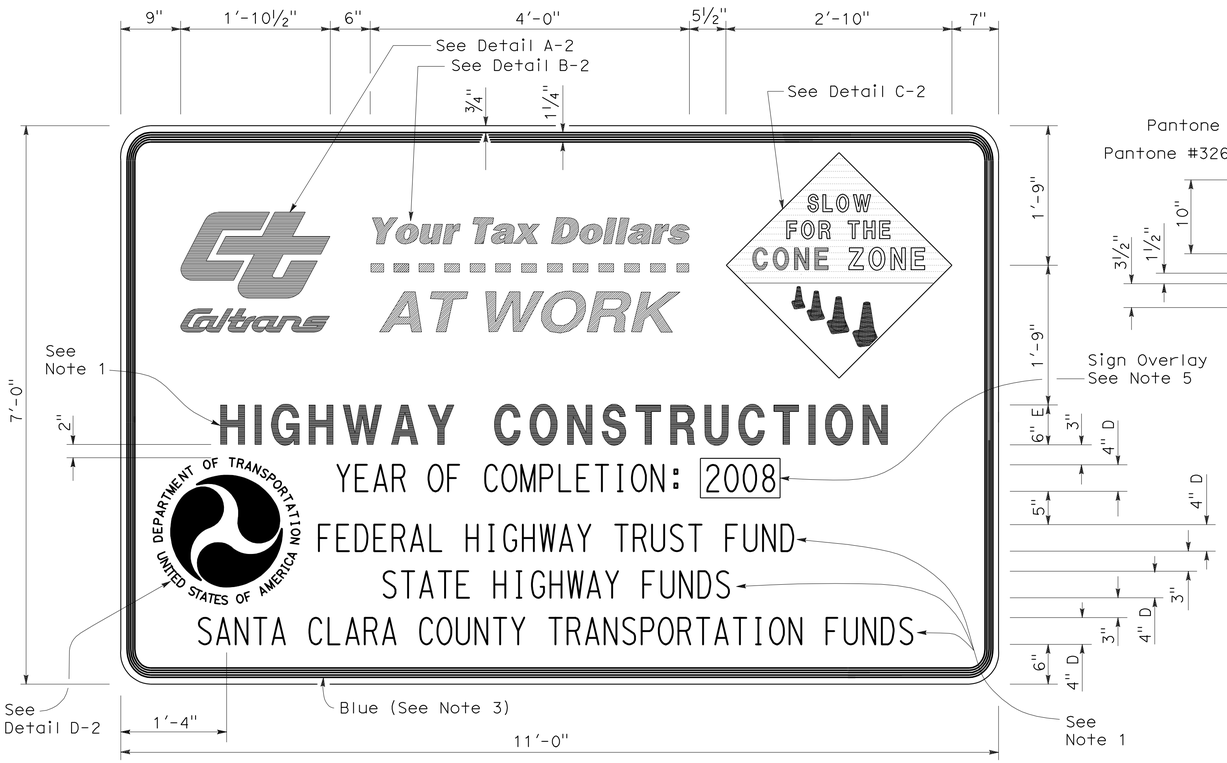

TYPE 2

DETAIL A-2

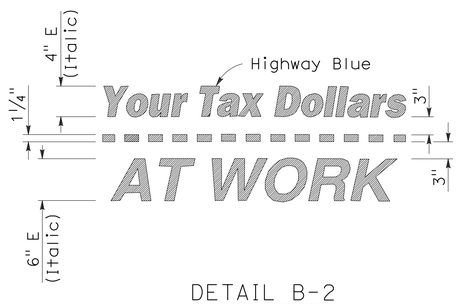

DETAIL B-2
(See Note 3)

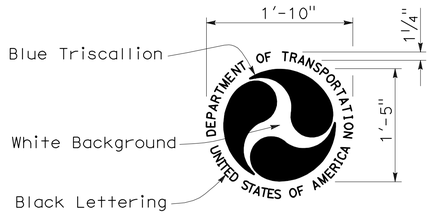

DETAIL D-2
(See Note 6)

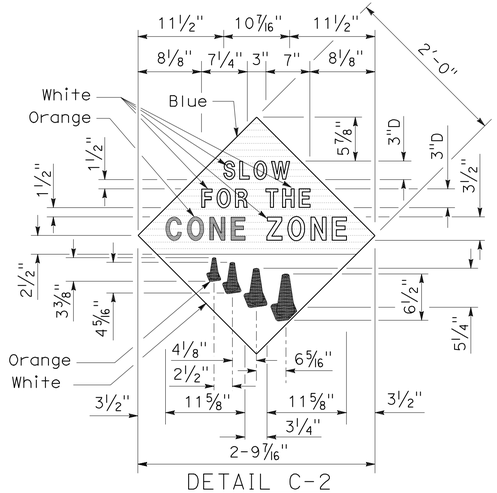

DETAIL C-2
(See Note 4)

STATE OF CALIFORNIA
DEPARTMENT OF TRANSPORTATION

CONSTRUCTION PROJECT FUNDING IDENTIFICATION SIGNS

NO SCALE

RSP T7 DATED NOVEMBER 17, 2006 SUPERSEDES STANDARD PLAN T7
DATED MAY 1, 2006 - PAGE 217 OF THE STANDARD PLANS BOOK DATED MAY 2006.

REVISED STANDARD PLAN RSP T7

2006 REVISED STANDARD PLAN RSP T7

9-7-06

DIST	COUNTY	ROUTE	POST MILES TOTAL PROJECT	SHEET NO.	TOTAL SHEETS
04	Mrn	1	15.0/17.0	45	50

Robert B Schott
LICENSED LANDSCAPE ARCHITECT

April 3, 2009
PLANS APPROVAL DATE

LICENSED LANDSCAPE ARCHITECT — Robert B. Schott — 3025 — Signature — 11-30-10 Renewal Date — 2-25-09 Date — STATE OF CALIFORNIA

The State of California or its officers or agents shall not be responsible for the accuracy or completeness of electronic copies of this plan sheet.

To accompany plans dated 6-14-10

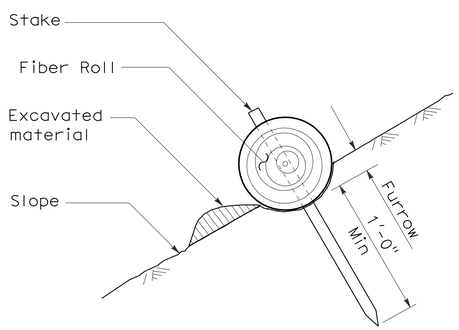

SECTION

TEMPORARY FIBER ROLL (TYPE 1)

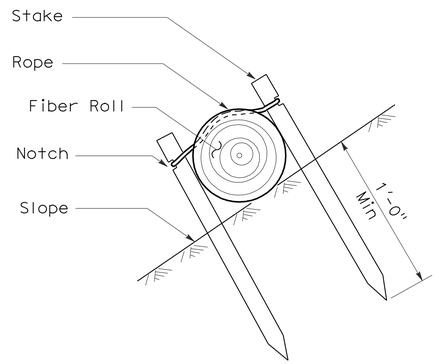

SECTION

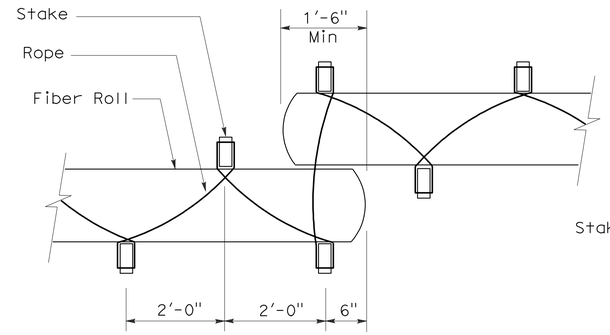

PLAN

TEMPORARY FIBER ROLL (TYPE 2)

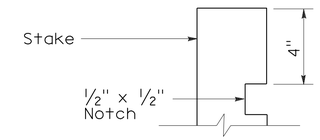

ELEVATION

STAKE NOTCH DETAIL

NOTES:

1. Temporary fiber roll spacing varies depending upon slope inclination.
2. Installations shown in the perspectives are for slope inclination of 10:1 and steeper.

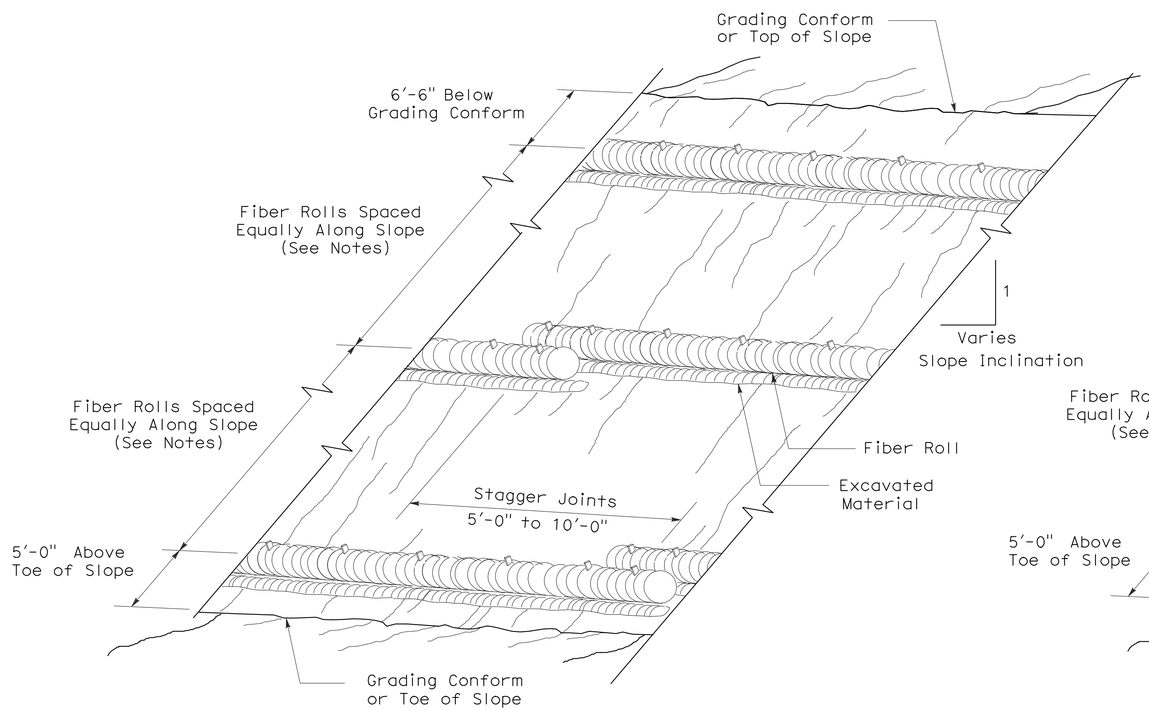

PERSPECTIVE

TEMPORARY FIBER ROLL (TYPE 1)

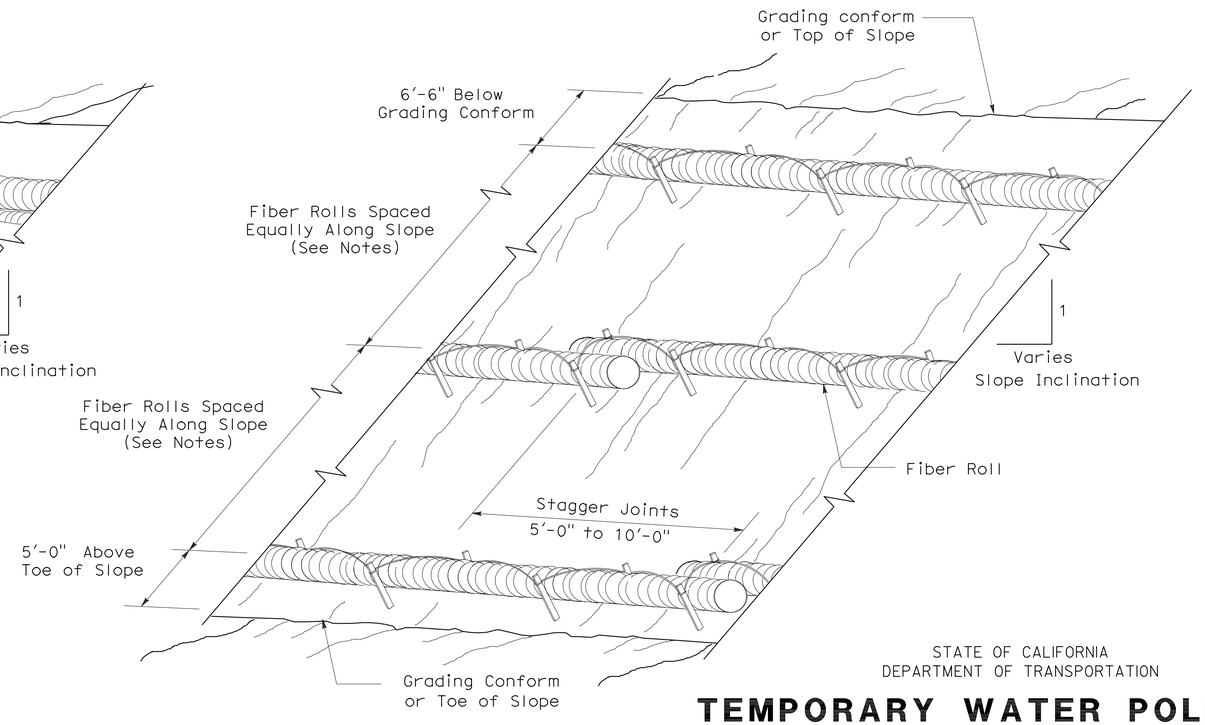

PERSPECTIVE

TEMPORARY FIBER ROLL (TYPE 2)

STATE OF CALIFORNIA
DEPARTMENT OF TRANSPORTATION

TEMPORARY WATER POLLUTION CONTROL DETAILS (TEMPORARY FIBER ROLL)

NO SCALE

RSP T56 DATED APRIL 3, 2009 SUPERSEDES STANDARD PLAN T56
DATED MAY 1, 2006 - PAGE 232 OF THE STANDARD PLANS BOOK DATED MAY 2006.

REVISED STANDARD PLAN RSP T56

2006 REVISED STANDARD PLAN RSP T56

DIST	COUNTY	ROUTE	POST MILES TOTAL PROJECT	SHEET NO.	TOTAL SHEETS
04	Mrn	1	15.0/17.0	46	50

LICENSED LANDSCAPE ARCHITECT

April 3, 2009
PLANS APPROVAL DATE

LICENSED LANDSCAPE ARCHITECT
Robert B. Schott 3025
Signature
11-30-10
Renewal Date
2-25-09
Date
STATE OF CALIFORNIA

The State of California or its officers or agents shall not be responsible for the accuracy or completeness of electronic copies of this plan sheet.

To accompany plans dated 6-14-10

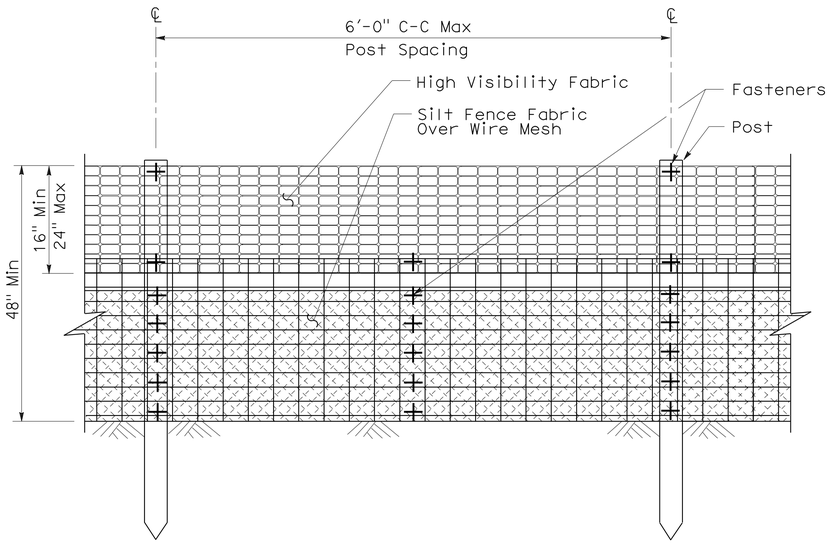

ELEVATION

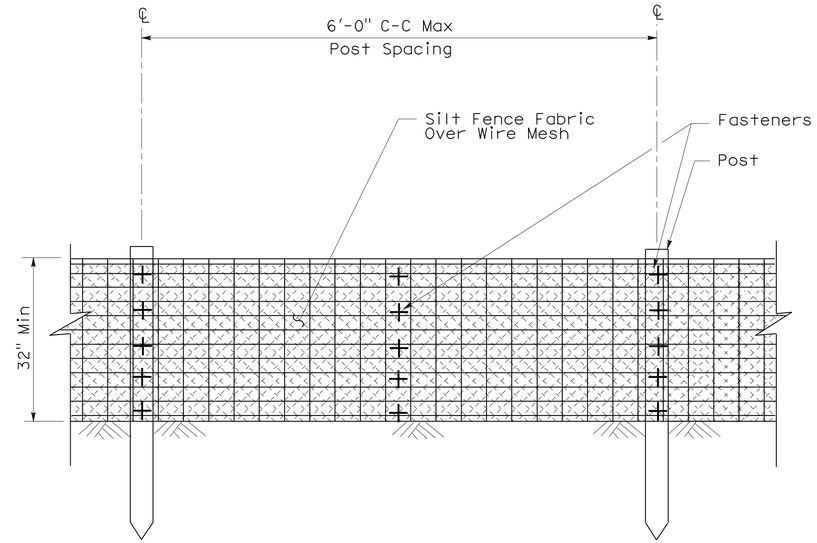

ELEVATION

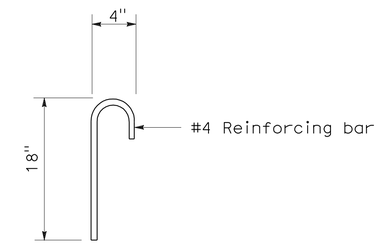

ANCHOR

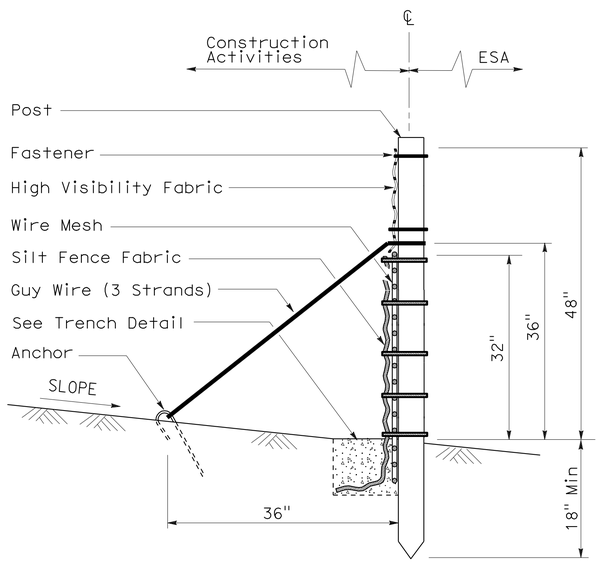

SECTION

TEMPORARY REINFORCED SILT FENCE (TYPE I)

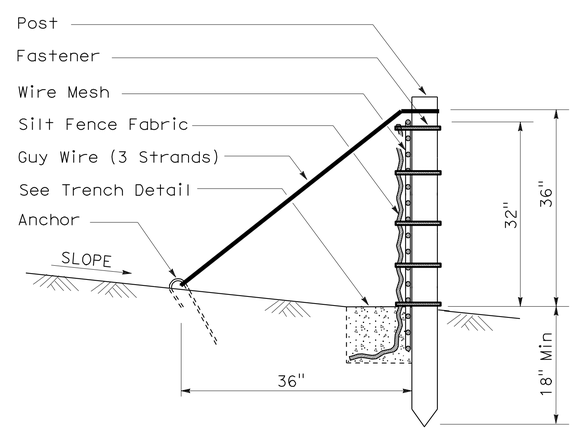

SECTION

TEMPORARY REINFORCED SILT FENCE (TYPE 2)

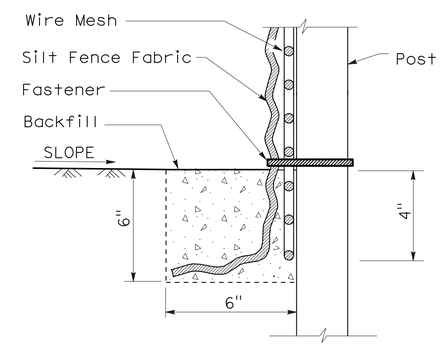

SECTION

TRENCH DETAIL

STATE OF CALIFORNIA
DEPARTMENT OF TRANSPORTATION

TEMPORARY WATER POLLUTION CONTROL DETAILS (TEMPORARY REINFORCED SILT FENCE)

NO SCALE

NSP T60 DATED APRIL 3, 2009 SUPPLEMENTS
THE STANDARD PLANS BOOK DATED MAY 2006.

NEW STANDARD PLAN NSP T60

2006 NEW STANDARD PLAN NSP T60

1-7-09

DIST	COUNTY	ROUTE	POST MILES TOTAL PROJECT	SHEET NO.	TOTAL SHEETS
04	Mrn	1	15.0/17.0	47	50

LICENSED LANDSCAPE ARCHITECT

August 15, 2008
PLANS Approval DATE

LICENSED LANDSCAPE ARCHITECT ROBERT B. SCHOTT 3625 Signature 11-04-08 Renewal Date 08-11-08 Date STATE OF CALIFORNIA

The State of California or its officers or agents shall not be responsible for the accuracy or completeness of electronic copies of this plan sheet.

To accompany plans dated 6-14-10

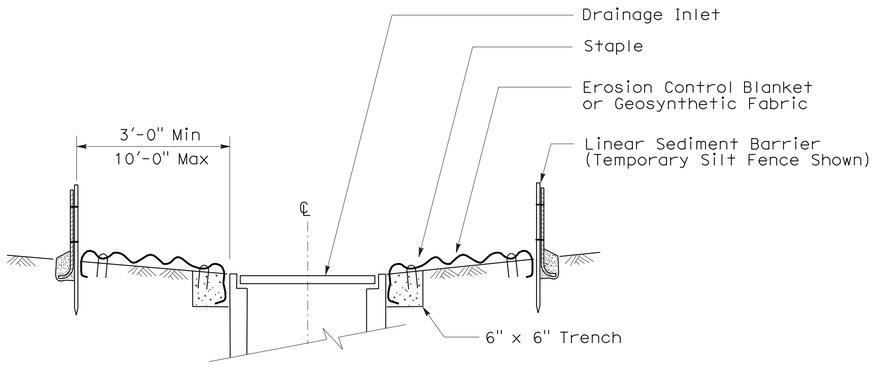

SECTION A-A

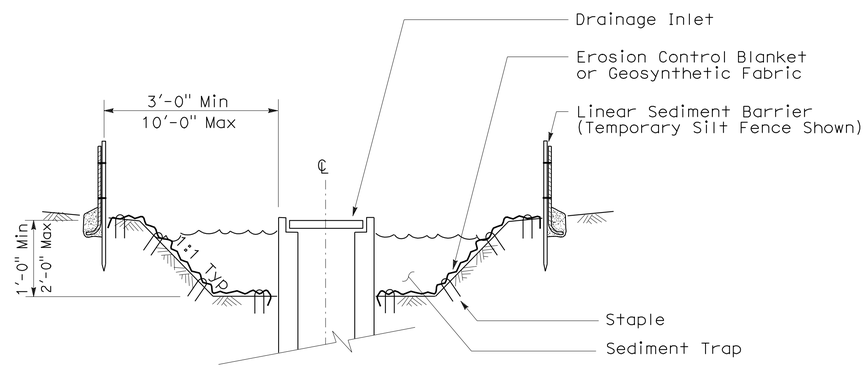

SECTION B-B

NOTES:

1. See Standard Plan T51 for Temporary Silt Fence.
2. Dimensions may vary to fit field conditions.

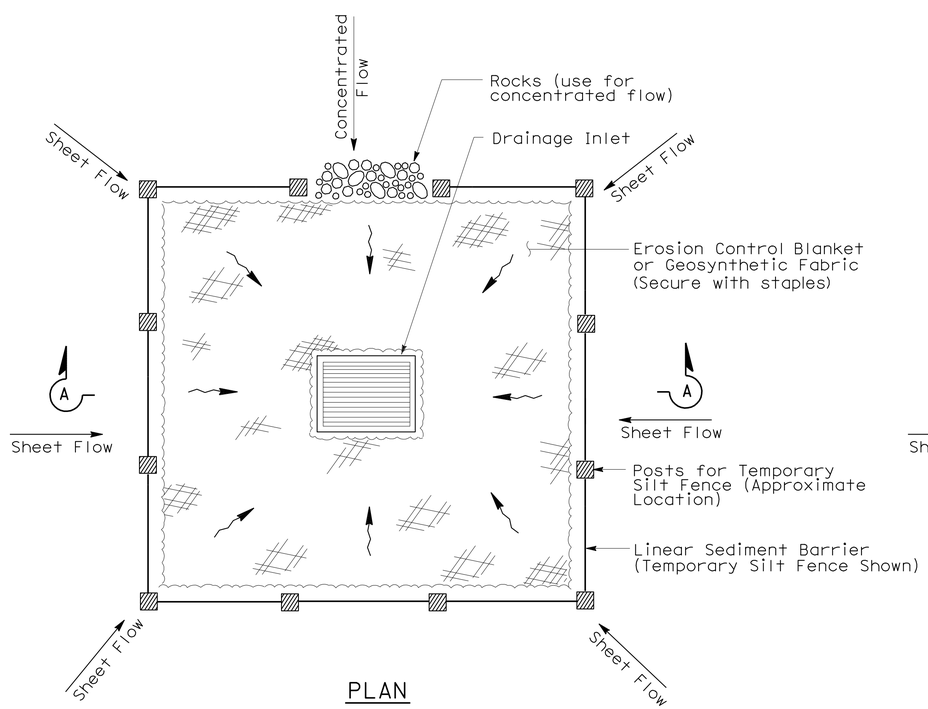

PLAN

TEMPORARY DRAINAGE INLET PROTECTION (TYPE 1)

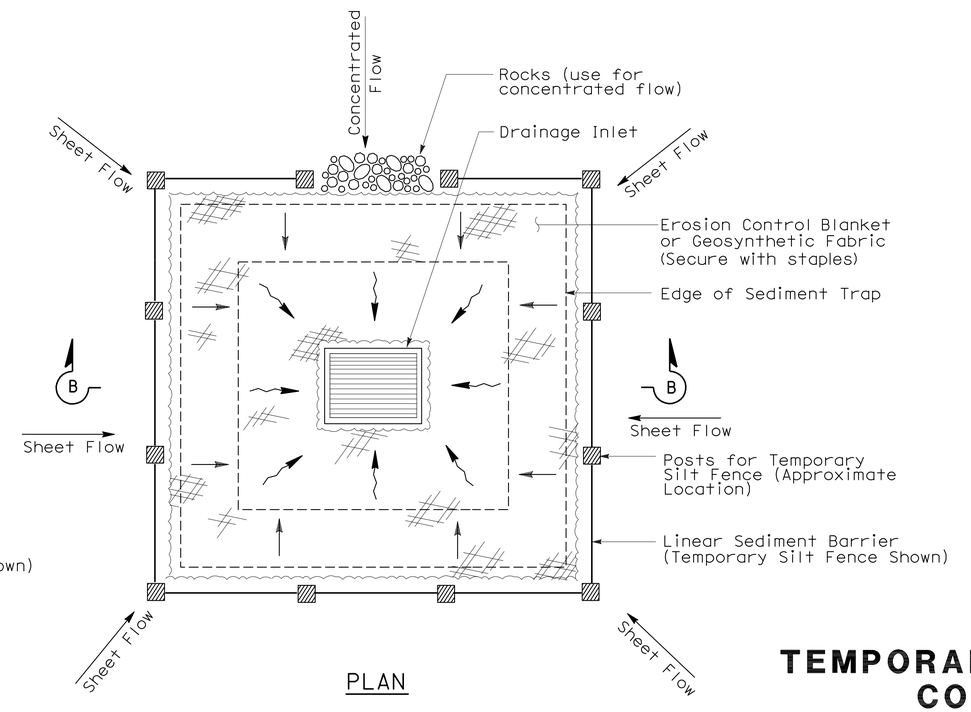

PLAN

TEMPORARY DRAINAGE INLET PROTECTION (TYPE 2) (EXCAVATED SEDIMENT TRAP)

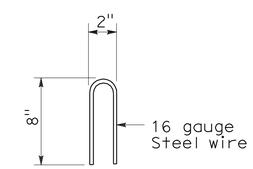

STAPLE DETAIL

STATE OF CALIFORNIA
DEPARTMENT OF TRANSPORTATION

TEMPORARY WATER POLLUTION CONTROL DETAILS (TEMPORARY DRAINAGE INLET PROTECTION)

NO SCALE

NSP T61 DATED AUGUST 15, 2008 SUPPLEMENTS THE STANDARD PLANS BOOK DATED MAY 2006.

NEW STANDARD PLAN NSP T61

2006 NEW STANDARD PLAN NSP T61

7-11-08

DIST	COUNTY	ROUTE	POST MILES TOTAL PROJECT	SHEET NO.	TOTAL SHEETS
04	Mrn	1	15.0/17.0	48	50

Robert B Schott
LICENSED LANDSCAPE ARCHITECT

August 15, 2008
PLANS APPROVAL DATE

LICENSED LANDSCAPE ARCHITECT Robert B. Schott 3625 Signature 11-04-08 Renewal Date 08-11-08 Date STATE OF CALIFORNIA

The State of California or its officers or agents shall not be responsible for the accuracy or completeness of electronic copies of this plan sheet.

To accompany plans dated 6-14-10

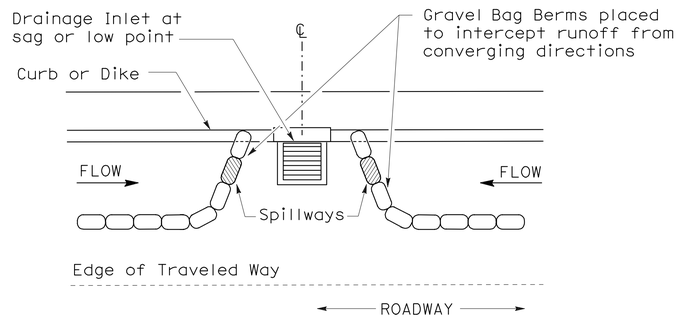

PLAN

CONFIGURATION FOR SAG POINT INLET (GRAVEL BAG BERM)

GRAVEL BAG BERM (TYPE 3A) SPACING TABLE

SLOPE OF ROADWAY (PERCENT)	1 to 3.9	4 to 5.9	6 to 7.9	8 to 10	10+
INTERVAL BETWEEN BERM	100′	75′	50′	25′	12′

For slope of less than 1%, install barriers only if erosion/sediment is prevalent

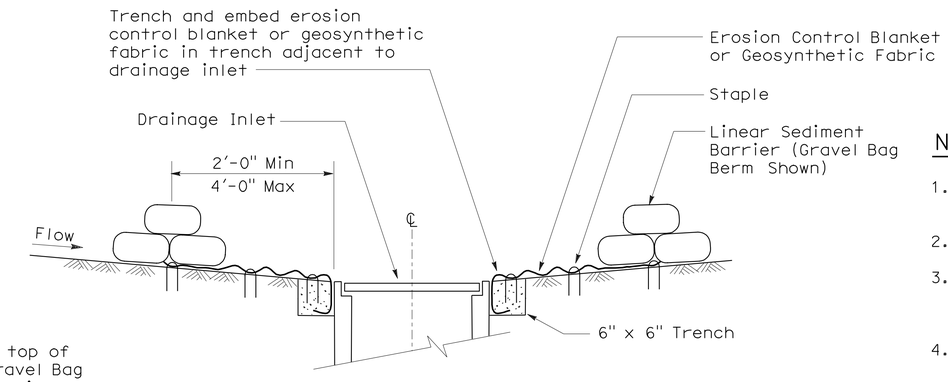

SECTION A-A

NOTES:

1. Place safety cones adjacent to drainage inlet protection.
2. Dimensions may vary to fit field conditions.
3. Install a minimum of 3 gravel bag berms upstream of each drainage inlet to be protected.
4. Position erosion control blanket or geosynthetic fabric at edge of concrete apron and secure in trench.
5. Erosion control blanket or geosynthetic fabric is not required if the area adjacent to the drainage inlet is vegetated or paved.

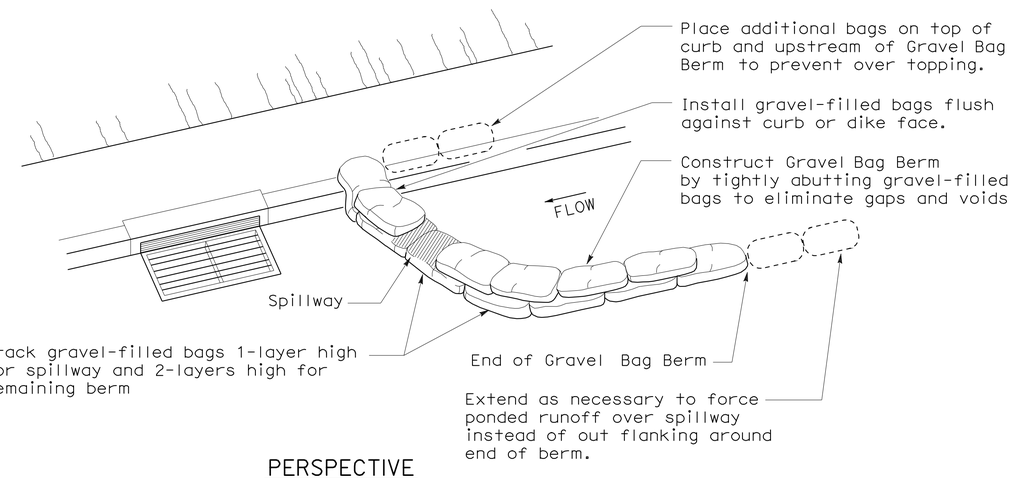

PERSPECTIVE

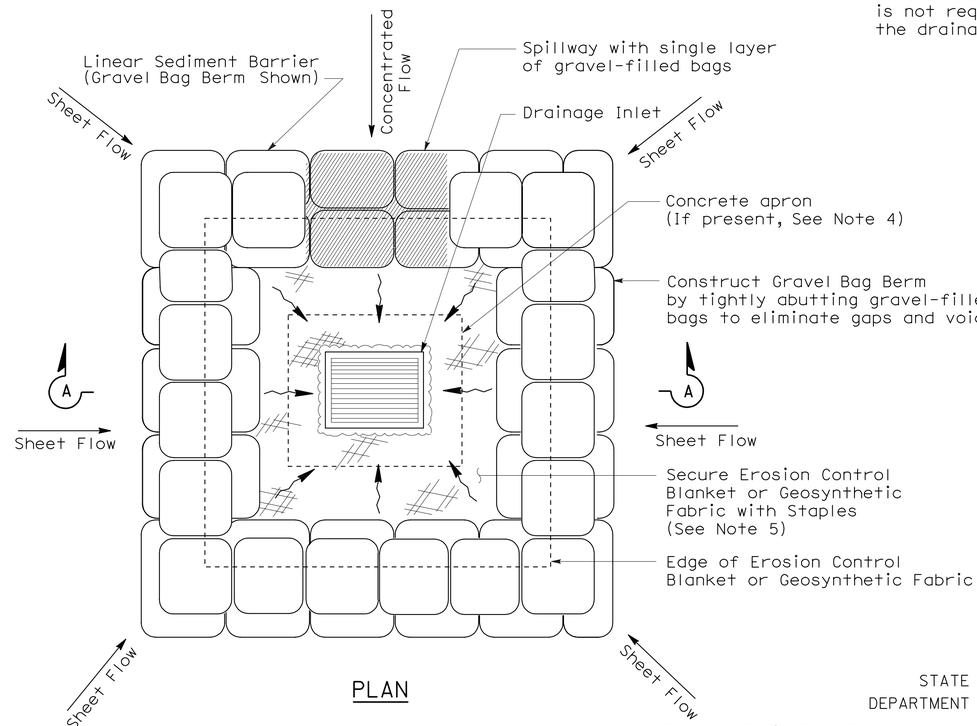

PLAN

TEMPORARY DRAINAGE INLET PROTECTION (TYPE 3B)

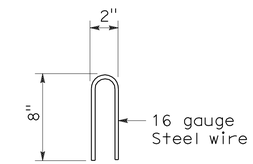

STAPLE DETAIL

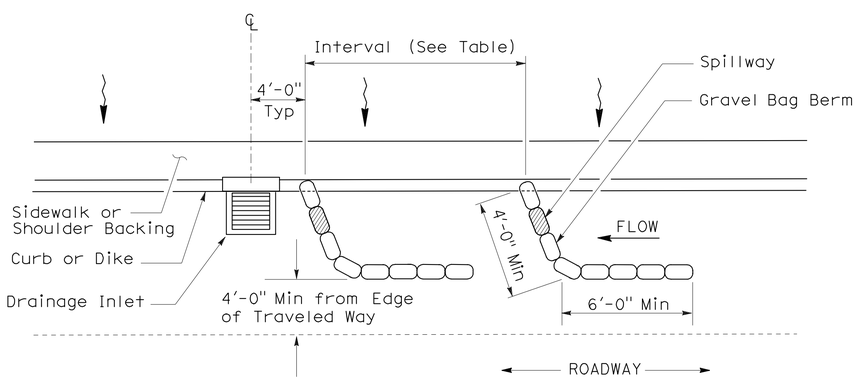

PLAN

TEMPORARY DRAINAGE INLET PROTECTION (TYPE 3A) (GRAVEL BAG BERM)

STATE OF CALIFORNIA
DEPARTMENT OF TRANSPORTATION

TEMPORARY WATER POLLUTION CONTROL DETAILS (TEMPORARY DRAINAGE INLET PROTECTION)

NO SCALE

NSP T62 DATED AUGUST 15, 2008 SUPPLEMENTS THE STANDARD PLANS BOOK DATED MAY 2006.

NEW STANDARD PLAN NSP T62

2006 NEW STANDARD PLAN NSP T62

7-11-08

DIST	COUNTY	ROUTE	POST MILES TOTAL PROJECT	SHEET NO.	TOTAL SHEETS
04	Mrn	1	15.0/17.0	49	50

Robert B Schott
LICENSED LANDSCAPE ARCHITECT

August 15, 2008
PLANS APPROVAL DATE

LICENSED LANDSCAPE ARCHITECT Robert B. Schott 3895 Signature 11-04-08 Renewal Date 08-11-08 Date STATE OF CALIFORNIA

The State of California or its officers or agents shall not be responsible for the accuracy or completeness of electronic copies of this plan sheet.

To accompany plans dated 6-14-10

FLEXIBLE SEDIMENT BARRIER SPACING TABLE

SLOPE OF ROADWAY (PERCENT)	0 to 0.9	1 to 1.9	2 to 2.9	3 to 4	5+
INTERVAL BETWEEN BARRIERS	50′	35′	30′	25′	20′
ANGLE FROM FACE OF CURB	70°	70°	70°	45°	45°
SUGGESTED BARRIER LENGTH	6′	6′	6′	6′	6′

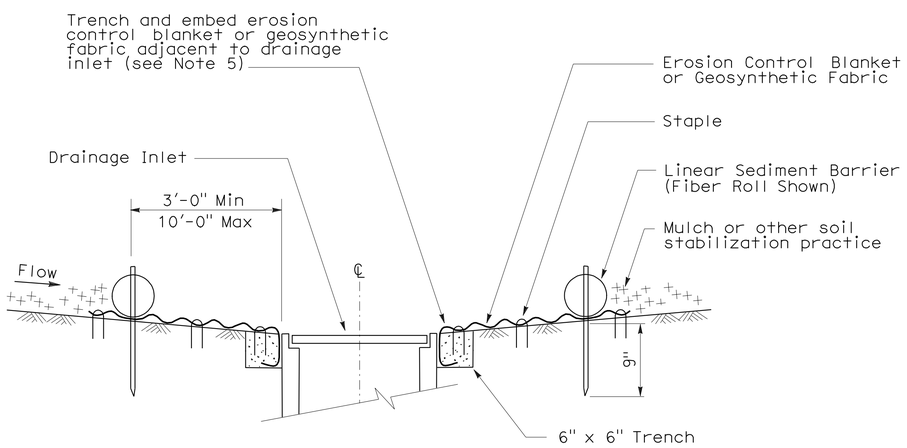

SECTION A-A

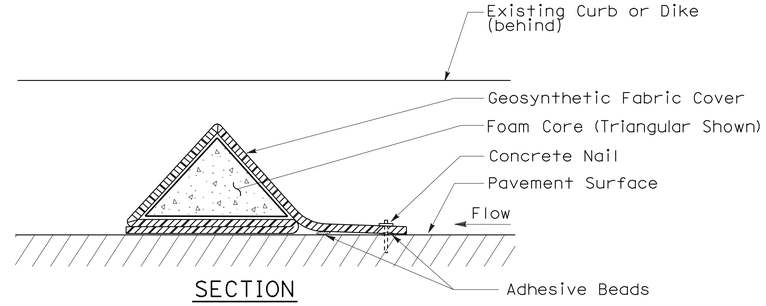

SECTION

FLEXIBLE SEDIMENT BARRIER DETAIL (FOAM BARRIER SHOWN)

NOTES:

1. See Standard Plan T51 for Temporary Silt Fence.
2. Dimensions may vary to fit field conditions.
3. Install a minimum of 3 flexible sediment barriers upstream of each drainage inlet to be protected.
4. Position erosion control blanket or geosynthetic fabric at edge of concrete apron and secure in trench.
5. Erosion control blanket or geosynthetic fabric is not required if the area adjacent to the drainage inlet is vegetated.

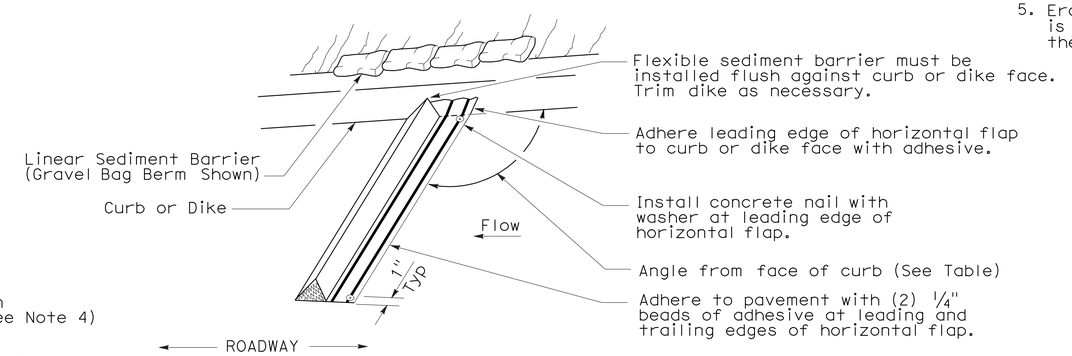

PERSPECTIVE

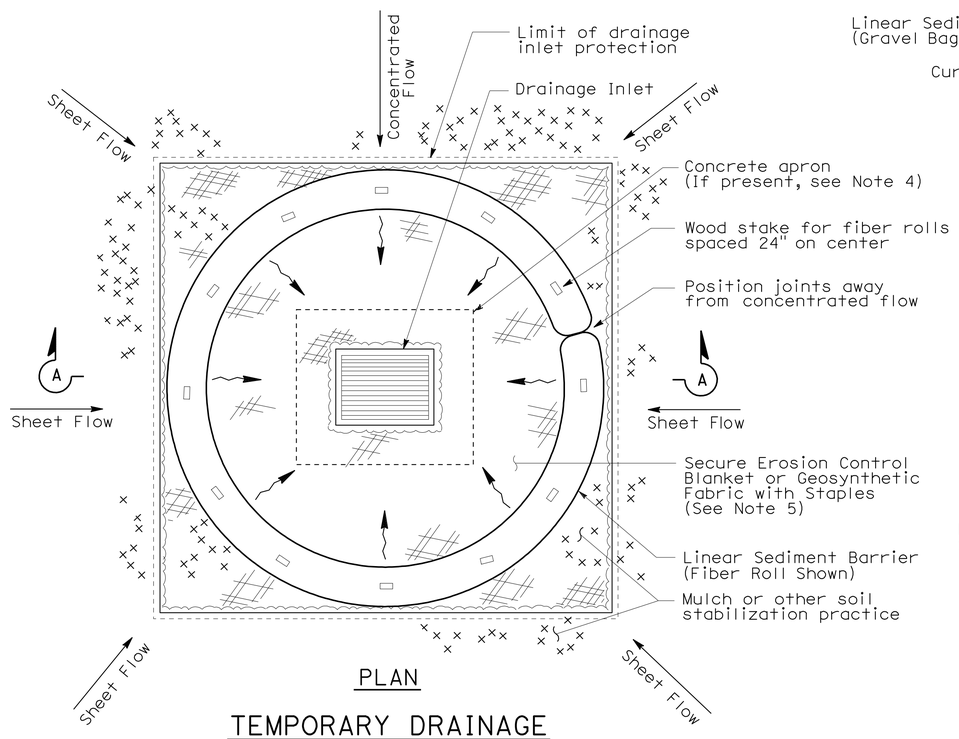

PLAN

TEMPORARY DRAINAGE INLET PROTECTION (TYPE 4A)

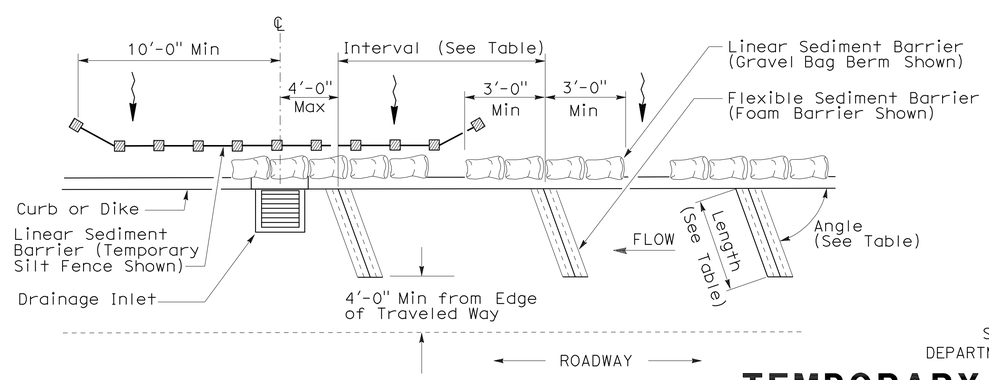

PLAN

TEMPORARY DRAINAGE INLET PROTECTION (TYPE 4B) FLEXIBLE SEDIMENT BARRIER

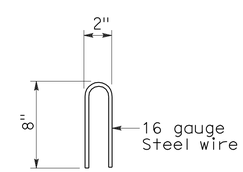

STAPLE DETAIL

STATE OF CALIFORNIA
DEPARTMENT OF TRANSPORTATION

TEMPORARY WATER POLLUTION CONTROL DETAILS (TEMPORARY DRAINAGE INLET PROTECTION)

NO SCALE

NSP T63 DATED AUGUST 15, 2008 SUPPLEMENTS THE STANDARD PLANS BOOK DATED MAY 2006.

NEW STANDARD PLAN NSP T63

2006 NEW STANDARD PLAN NSP T63

7-11-08

DIST	COUNTY	ROUTE	POST MILES TOTAL PROJECT	SHEET NO.	TOTAL SHEETS
04	Mrn	1	15.0/17.0	50	50

LICENSED LANDSCAPE ARCHITECT

August 15, 2008
PLANS APPROVAL DATE

The State of California or its officers or agents shall not be responsible for the accuracy or completeness of electronic copies of this plan sheet.

LICENSED LANDSCAPE ARCHITECT — Robert B. Schott — Signature — 11-04-08 Renewal Date — 08-11-08 Date — STATE OF CALIFORNIA

To accompany plans dated 6-14-10

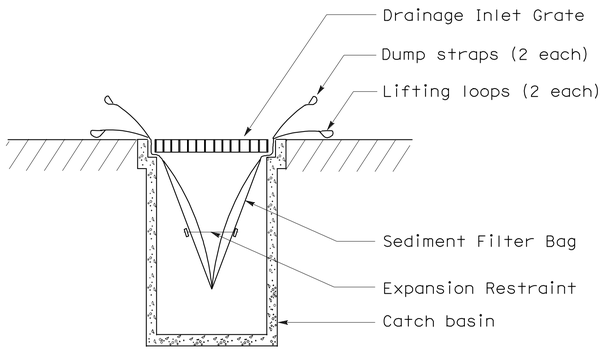

SECTION B-B

SEDIMENT FILTER BAG DETAIL

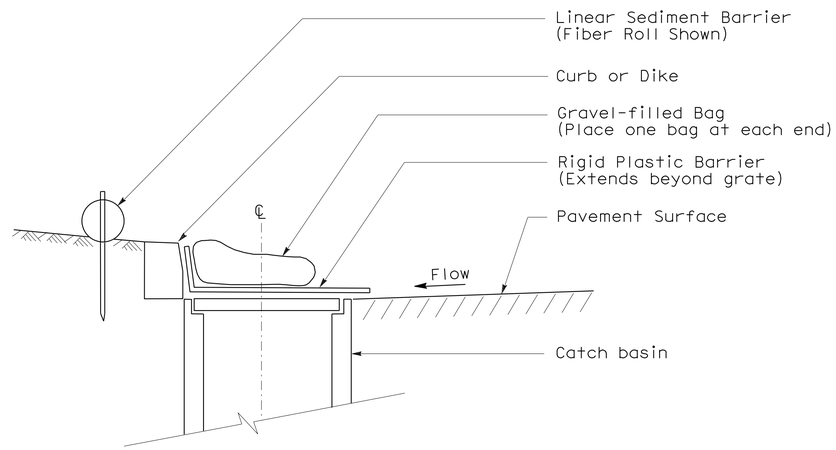

SECTION

TEMPORARY DRAINAGE INLET PROTECTION (TYPE 6A) (CATCH BASIN WITH GRATE)

NOTES:

1. See Standard Plan T51 for Temporary Silt Fence.
2. Dimensions may vary to fit field conditions.

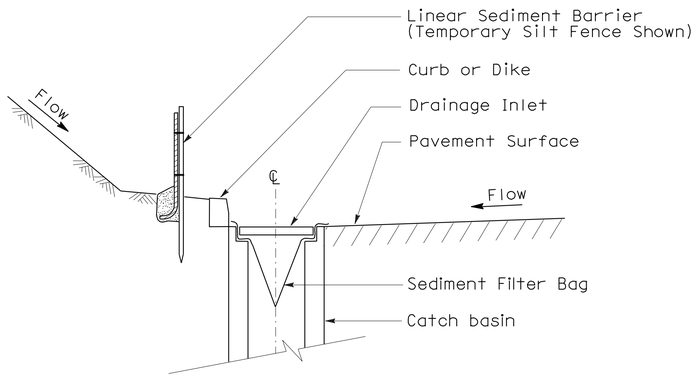

SECTION A-A

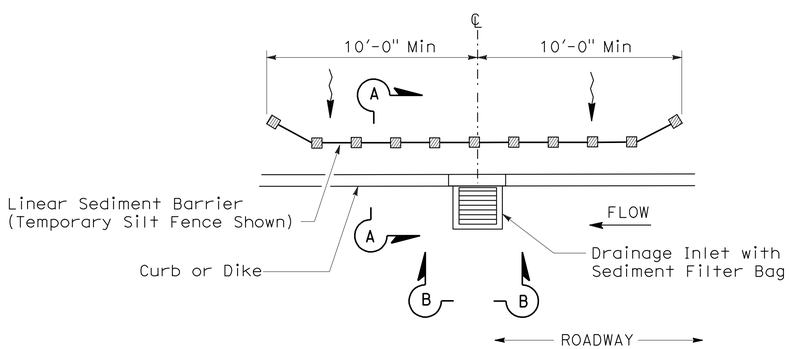

PLAN

TEMPORARY DRAINAGE INLET PROTECTION (TYPE 5) (SEDIMENT FILTER BAG)

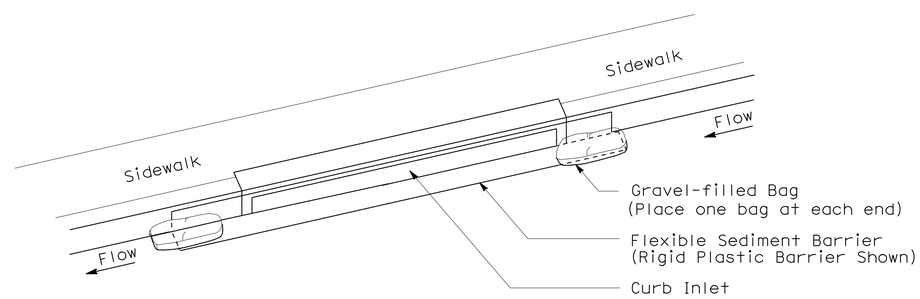

PERSPECTIVE

TEMPORARY DRAINAGE INLET PROTECTION (TYPE 6B) (CURB INLET WITHOUT GRATE)

STATE OF CALIFORNIA
DEPARTMENT OF TRANSPORTATION

TEMPORARY WATER POLLUTION CONTROL DETAILS (TEMPORARY DRAINAGE INLET PROTECTION)

NO SCALE

NSP T64 DATED AUGUST 15, 2008 SUPPLEMENTS THE STANDARD PLANS BOOK DATED MAY 2006.

NEW STANDARD PLAN NSP T64

2006 NEW STANDARD PLAN NSP T64

7-11-08