DIST	COUNTY	ROUTE	POST MILES TOTAL PROJECT	SHEET NO.	TOTAL SHEETS
04	Ala	680	M3.6/R6.5	101	163

LICENSED LANDSCAPE ARCHITECT

June 5, 2009
PLANS APPROVAL DATE

LICENSED LANDSCAPE ARCHITECT — Gregory A. Balzer — 2016 — 10 Renewal 2-28-11 Renewal Date 5-14-09 Date — STATE OF CALIFORNIA

The State of California or its officers or agents shall not be responsible for the accuracy or completeness of electronic copies of this plan sheet.

To accompany plans dated 6-18-12

2006 REVISED STANDARD PLAN RSP H2

EXISTING	PROPOSED	ITEM DESCRIPTION
		WATER METER (WM)
		BACKFLOW PREVENTER ASSEMBLY (BPA)
		BACKFLOW PREVENTER ASSEMBLY IN ENCLOSURE (BPAE)
		BACKFLOW PREVENTER ENCLOSURE (BPE)
		BOOSTER PUMP (BP)
		TRUCK LOADING STANDPIPE (TLS)
FS	FS	FLOW SENSOR (FS)
X	X	MASTER IRRIGATION CONTROLLER (MIC)
		AUXILIARY IRRIGATION CONTROLLER (AIC)
		IRRIGATION CONTROLLER (IC)/ IRRIGATION CONTROLLER (IC) (BATTERY) IRRIGATION CONTROLLER (IC) (SOLAR)
		IRRIGATION CONTROLLER(S) IN CONTROLLER ENCLOSURE CABINET (ICC)
		CONTROL AND NEUTRAL CONDUCTORS (CNC)
SCC	SCC	SPRINKLER CONTROL CONDUIT (SCC)
		IRRIGATION CROSSOVER
		EXTEND IRRIGATION CROSSOVER
		IRRIGATION SLEEVE
dip	DIP	DUCTILE IRON PIPE (SUPPLY LINE) (MAIN) (DIP)
		GALVANIZED STEEL PIPE (SUPPLY LINE) (MAIN) (GSP)
		GALVANIZED STEEL PIPE (SUPPLY LINE) (LATERAL) (GSP)
		PLASTIC PIPE (PR 200) (SUPPLY LINE) (MAIN)
		PLASTIC PIPE (PR 200) (SUPPLY LINE) (LATERAL)
		PLASTIC PIPE (IRRIGATION LINE)
		REMOTE CONTROL VALVE (RCV) REMOTE CONTROL VALVE (MASTER) (RCVM) REMOTE CONTROL VALVE (MASTER) W/FLOW METER (RCVMF)
		MANUAL CONTROL VALVE (MCV)
		VALVE ASSEMBLY UNIT (VAU)
		WYE STRAINER (WS)
		FILTER ASSEMBLY UNIT (FAU)
		GATE VALVE (GV)
		BALL VALVE (BV)

EXISTING	PROPOSED	ITEM DESCRIPTION
		QUICK COUPLING VALVE (QCV)
		CAM COUPLER ASSEMBLY (CCA)
		PRESSURE REDUCING VALVE (PRV)
		PRESSURE RELIEF VALVE (PRLV)
		FLOW CONTROL VALVE (FCV)
		COMBINATION AIR RELEASE VALVE (CARV)
		CHECK VALVE (CV)
		FLUSH VALVE (FV)
		NOZZLE LINE W/TURNING UNION
		IRRIGATION SYSTEM
		IRRIGATION SYSTEM TO BE REMOVED
		CHAIN LINK GATE
		QUICK COUPLING VALVE W/SPRINKLER PROTECTOR
3	3	SPRINKLER W/SPRINKLER PROTECTOR
	C	CONNECT TO EXISTING SYSTEM
		CAP
		CAP EXISTING

VALVE CODE

RCV SIZE
IRRIGATION CONTROLLER
CONTROLLER STATION
VALVE IN PARALLEL (IF APPLICABLE)
GPM
QUANTITY OF SPRINKLERS (WHEN SHOWN)

* 2½"-A-2b-40 -60

MCV SIZE
VALVE NUMBER
GPM
QUANTITY OF TYPE SPRINKLERS (WHEN SHOWN)

* 2"-3-30 -50

* VALVE CODES FOR EXISTING VALVES ARE SHOWN IN A DASHED ENCLOSURE.

STATE OF CALIFORNIA
DEPARTMENT OF TRANSPORTATION

PLANTING AND IRRIGATION SYMBOLS

NO SCALE

RSP H2 DATED JUNE 5, 2009 SUPERSEDES RSP H2 DATED MARCH 7, 2008 AND STANDARD PLAN H2 DATED MAY 1, 2006 - PAGE 202 OF THE STANDARD PLANS BOOK DATED MAY 2006.

REVISED STANDARD PLAN RSP H2

5-11-09

DIST	COUNTY	ROUTE	POST MILES TOTAL PROJECT	SHEET NO.	TOTAL SHEETS
04	Ala	680	M3.6/R6.5	102	163

LICENSED LANDSCAPE ARCHITECT

April 3, 2009
PLANS APPROVAL DATE

The State of California or its officers or agents shall not be responsible for the accuracy or completeness of electronic copies of this plan sheet.

LICENSED LANDSCAPE ARCHITECT
Gregory A. Balzer 3598
Signature
02-28-11
Renewal Date
03-04-09
Date
STATE OF CALIFORNIA

To accompany plans dated 6-18-12

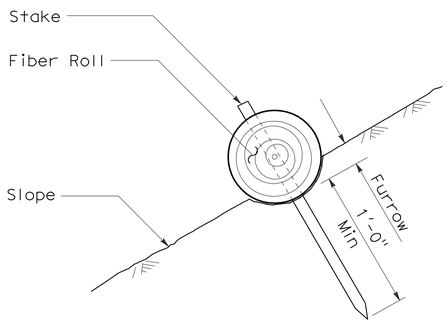

SECTION

FIBER ROLL (TYPE 1)

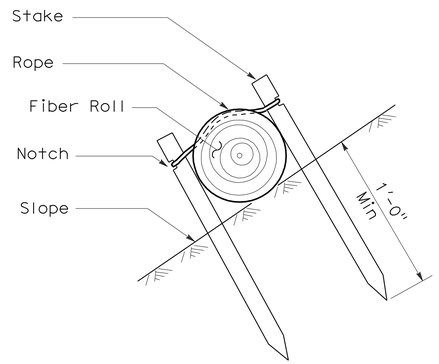

SECTION

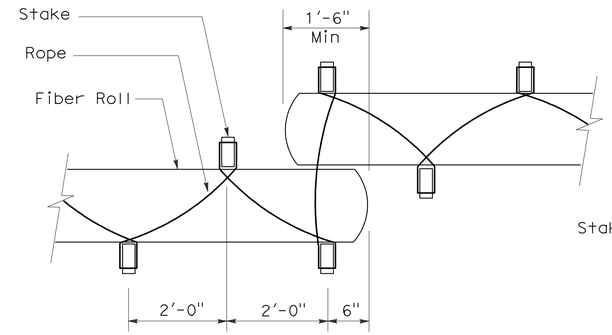

PLAN

FIBER ROLL (TYPE 2)

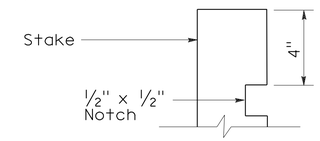

ELEVATION

STAKE NOTCH DETAIL

NOTES:

1. Fiber roll spacing varies depending upon slope inclination.
2. Installations shown in the perspectives are for slope inclination of 10:1 and steeper.

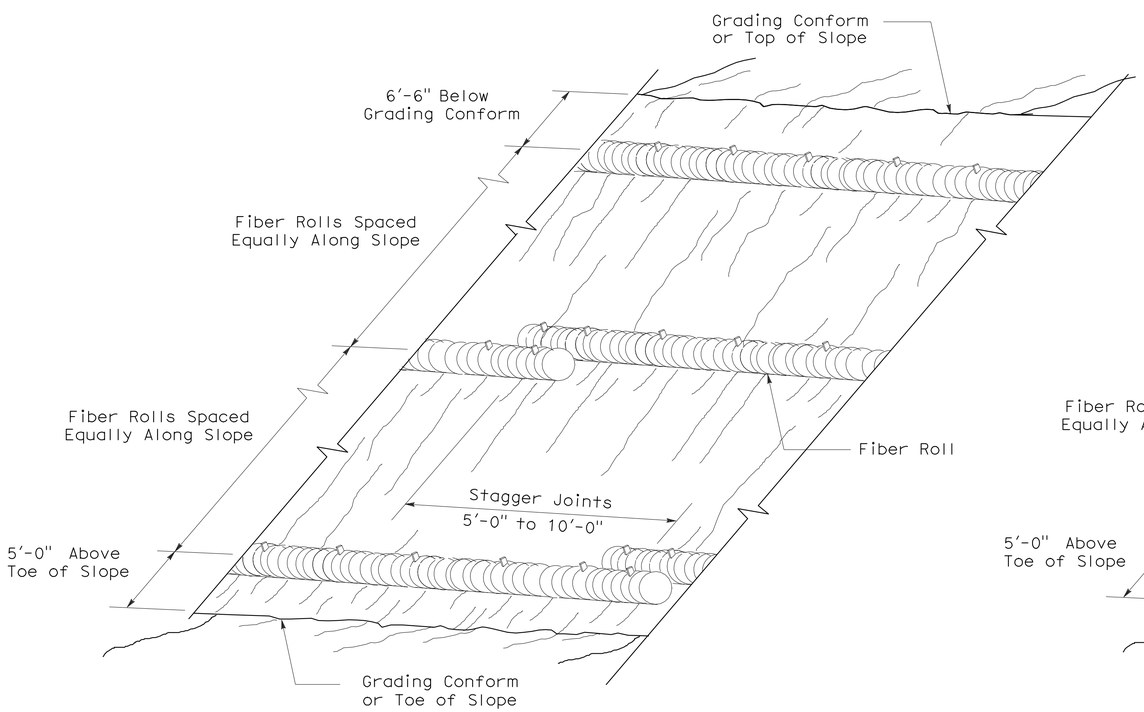

PERSPECTIVE

FIBER ROLL (TYPE 1)

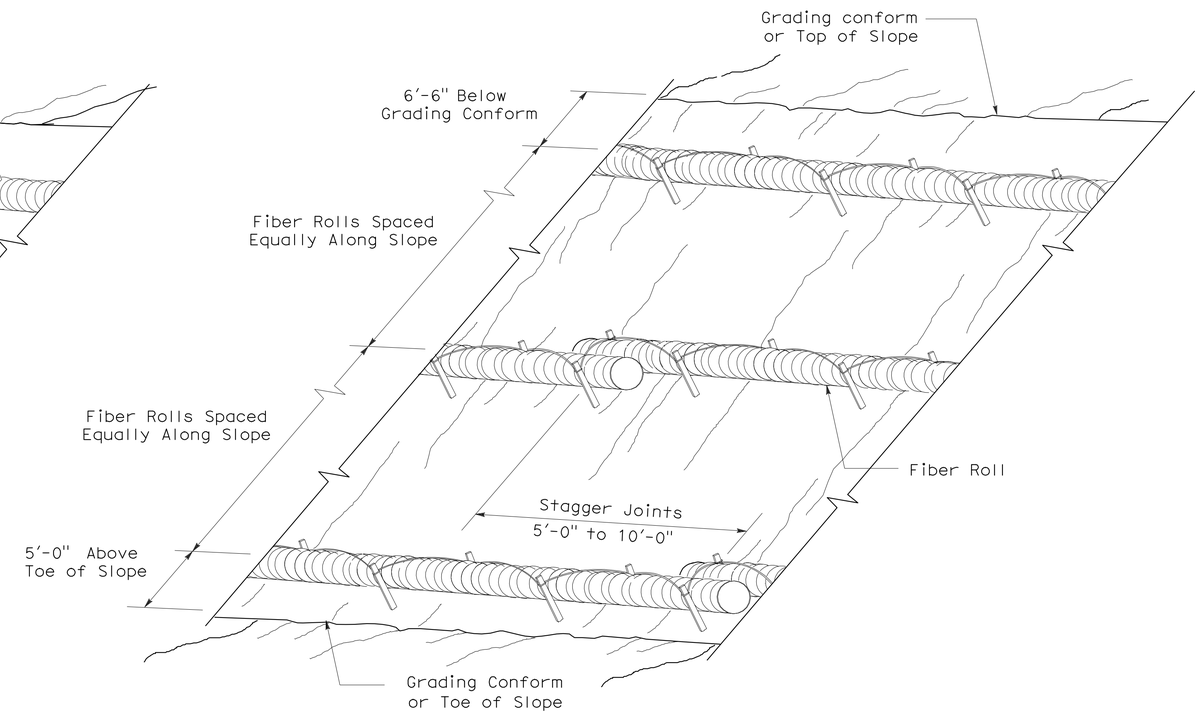

PERSPECTIVE

FIBER ROLL (TYPE 2)

STATE OF CALIFORNIA
DEPARTMENT OF TRANSPORTATION

EROSION CONTROL DETAILS (FIBER ROLL)

NO SCALE

RNSP H51 DATED APRIL 3, 2009 SUPERSEDES NSP H51 DATED DECEMBER 1, 2006 THAT SUPPLEMENTS THE STANDARD PLANS BOOK DATED MAY 2006.

REVISED NEW STANDARD PLAN RNSP H51

2006 REVISED NEW STANDARD PLAN RNSP H51

DIST	COUNTY	ROUTE	POST MILES TOTAL PROJECT	SHEET NO.	TOTAL SHEETS
04	Ala	680	M3.6/R6.5	103	163

Randell D. Hiatt
REGISTERED CIVIL ENGINEER

June 6, 2008
PLANS APPROVAL DATE

REGISTERED PROFESSIONAL ENGINEER
Randell D. Hiatt
No. C50200
Exp. 6-30-09
CIVIL
STATE OF CALIFORNIA

The State of California or its officers or agents shall not be responsible for the accuracy or completeness of electronic copies of this plan sheet.

To accompany plans dated 6-18-12

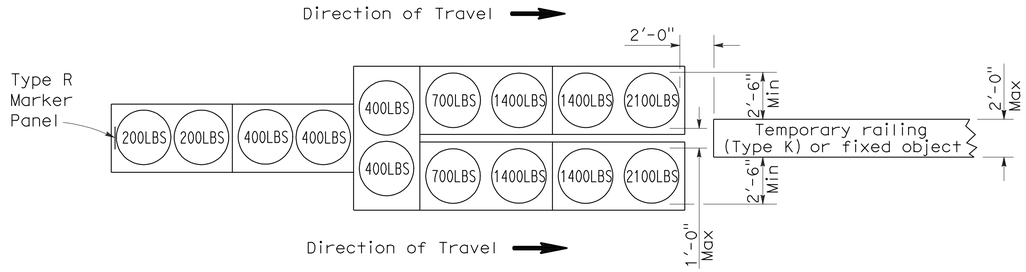

ARRAY `TU14'

Approach speed 45 mph or more

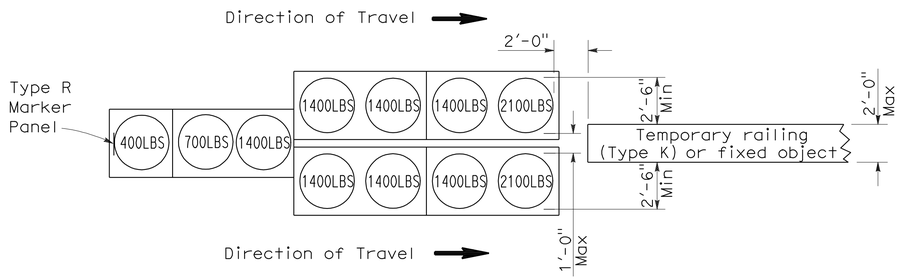

ARRAY `TU11'

Approach speed less than 45 mph

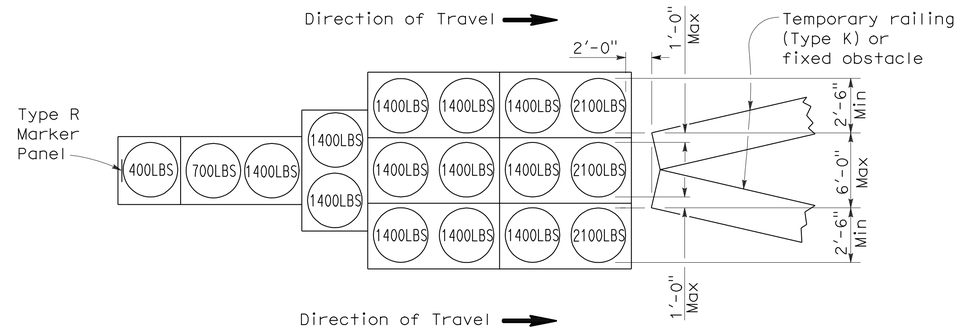

ARRAY `TU17'

Approach speed less than 45 mph

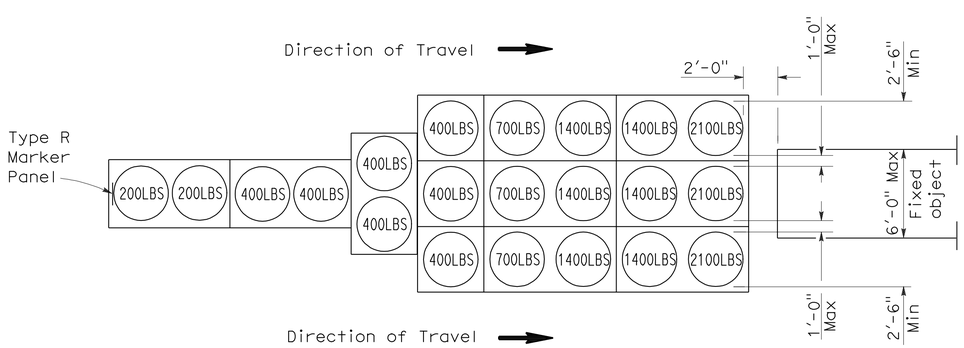

ARRAY `TU21'

Approach speed 45 mph or more

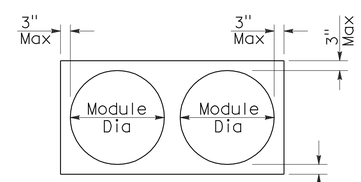

PLAN

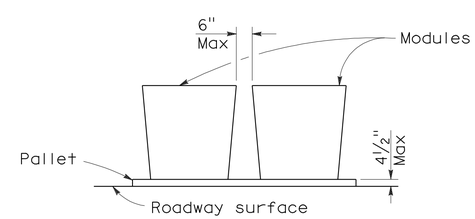

ELEVATION

CRASH CUSHION PALLET DETAIL

See Note 7

NOTES:

1. (XXX) Indicates sand filled module location and weight of sand in pounds for each module. Module spacing is based on the greater diameter of the module.
2. All sand weights are nominal.
3. Temporary crash cushion arrays shall not encroach on the traveled way.
4. Place the top of Type R marker panel 1" below the module lid.
5. Refer to Standard Plan A73B for marker details.
6. Approach speeds indicated conform to NCHRP 350 Report criteria.
7. Use of pallets is optional.

STATE OF CALIFORNIA
DEPARTMENT OF TRANSPORTATION

TEMPORARY CRASH CUSHION, SAND FILLED (UNIDIRECTIONAL)

NO SCALE

RSP T1A DATED JUNE 6, 2008 SUPERSEDES STANDARD PLAN T1A
DATED MAY 1, 2006 - PAGE 211 OF THE STANDARD PLANS BOOK DATED MAY 2006.

REVISED STANDARD PLAN RSP T1A

2006 REVISED STANDARD PLAN RSP T1A

DIST	COUNTY	ROUTE	POST MILES TOTAL PROJECT	SHEET NO.	TOTAL SHEETS
04	Ala	680	M3.6/R6.5	104	163

Randell D. Hiatt
REGISTERED CIVIL ENGINEER

June 6, 2008
PLANS APPROVAL DATE

REGISTERED PROFESSIONAL ENGINEER
Randell D. Hiatt
No. C50200
Exp. 6-30-09
CIVIL
STATE OF CALIFORNIA

The State of California or its officers or agents shall not be responsible for the accuracy or completeness of electronic copies of this plan sheet.

To accompany plans dated 6-18-12

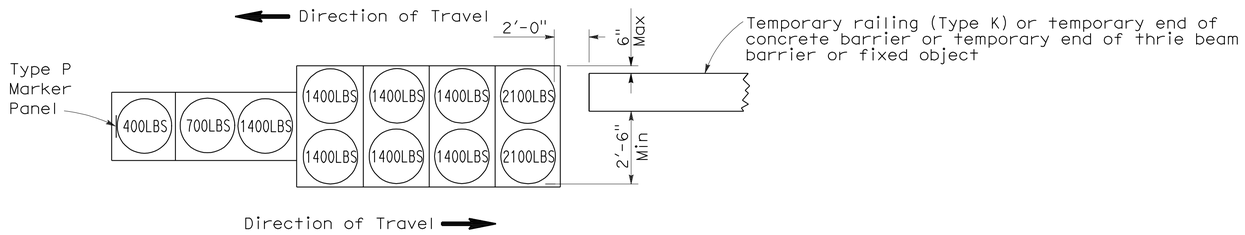

ARRAY 'TB11'

Approach speed less than 45 mph

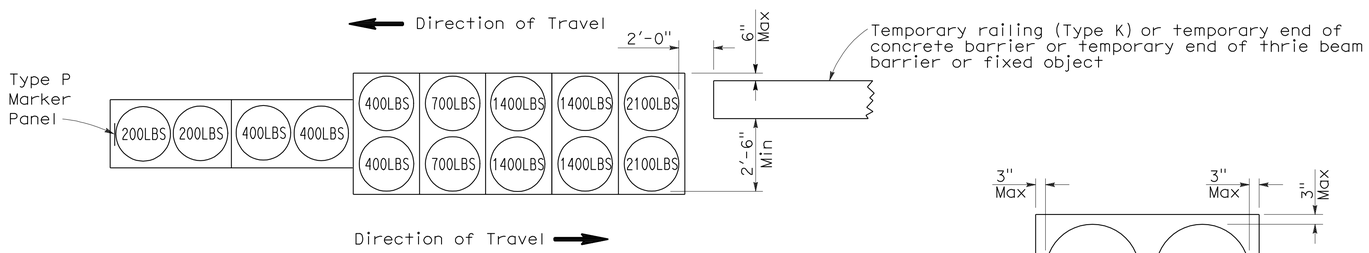

ARRAY 'TB14'

Approach speed 45 mph or more

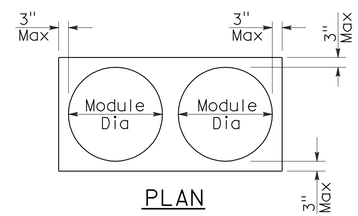

PLAN

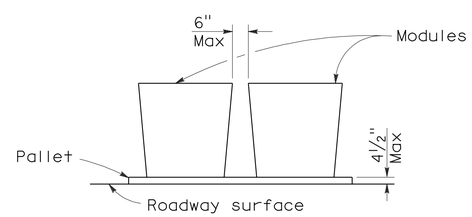

ELEVATION

CRASH CUSHION PALLET DETAIL

See Note 7

NOTES:

1. (XXX) Indicates sand filled module location and weight of sand in pounds for each module. Module spacing is based on the greater diameter of the module.
2. All sand weights are nominal.
3. Temporary crash cushion arrays shall not encroach on the traveled way.
4. Place the Type P marker panel so that the bottom of the panel rests upon the pallet.
5. Refer to Standard Plan A73B for marker details.
6. Approach speeds indicated conform to NCHRP 350 Report criteria.
7. Use of pallets is optional.

STATE OF CALIFORNIA
DEPARTMENT OF TRANSPORTATION

TEMPORARY CRASH CUSHION, SAND FILLED (BIDIRECTIONAL)

NO SCALE

RSP T1B DATED JUNE 6, 2008 SUPERSEDES STANDARD PLAN T1B
DATED MAY 1, 2006 - PAGE 212 OF THE STANDARD PLANS BOOK DATED MAY 2006.

REVISED STANDARD PLAN RSP T1B

2006 REVISED STANDARD PLAN RSP T1B

DIST	COUNTY	ROUTE	POST MILES TOTAL PROJECT	SHEET NO.	TOTAL SHEETS
04	Ala	680	M3.6/R6.5	105	163

Randell D. Hiatt
REGISTERED CIVIL ENGINEER

June 6, 2008
PLANS APPROVAL DATE

REGISTERED PROFESSIONAL ENGINEER
Randell D. Hiatt
No. C50200
Exp. 6-30-09
CIVIL
STATE OF CALIFORNIA

The State of California or its officers or agents shall not be responsible for the accuracy or completeness of electronic copies of this plan sheet.

To accompany plans dated 6-18-12

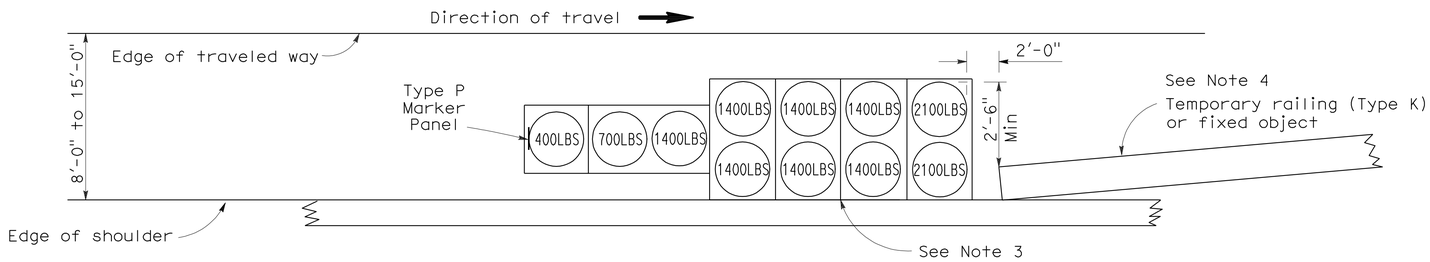

ARRAY 'TS11'

Approach speed less than 45 mph
See Note 9

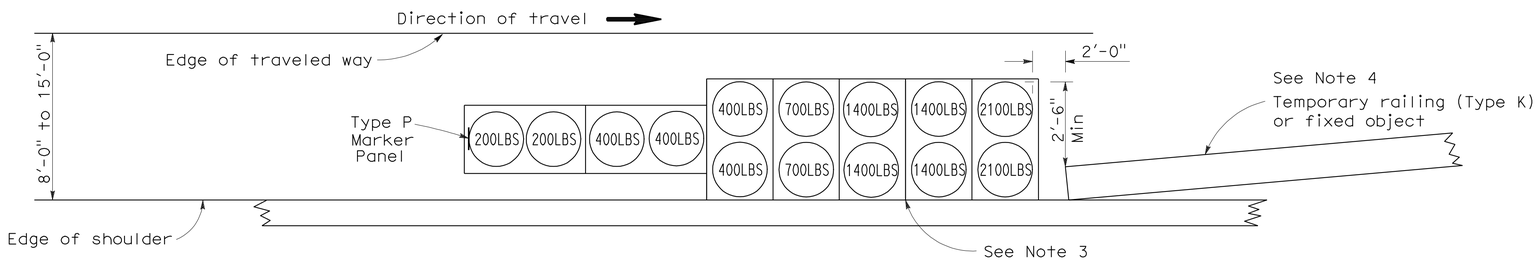

ARRAY 'TS14'

Approach speed 45 mph or more
See Note 9

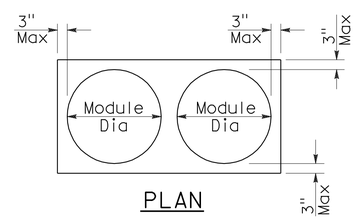

PLAN

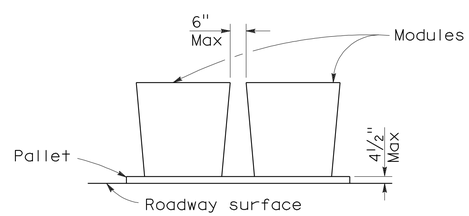

ELEVATION

CRASH CUSHION PALLET DETAIL

See Note 11

NOTES:

1. (XXX) Indicates sand filled module location and weight of sand in pounds for each module. Module spacing is based on the greater diameter of the module.
2. All sand weights are nominal.
3. The temporary crash cushion arrays shown on this plan shall be used only in locations where there will be traffic on one side of the temporary crash cushion array.
4. If the fixed object or approach end of the temporary railing is less than 15'-0" from the edge of traveled way, a temporary crash cushion is required in a construction or work zone.
5. Temporary crash cushion arrays shall not encroach on the traveled way.
6. Arrays for median shoulders shall conform to details shown on this plan for outside shoulders.
7. Place the Type P marker panel so that the bottom of the panel rests upon the pallet and faces traffic.
8. Refer to Standard Plan A73B for marker details.
9. For shoulder widths less than 8'-0", appropriate approved crash cushion protection, other than sand filled modules, shall be provided at fixed objects and at approach ends of temporary railing. The specific type of crash cushion shall be as shown on the project plans or as specified in the Special Provisions, or if not shown on the project plans or specified in the Special Provisions, shall be as approved by the Engineer.
10. Approach speeds indicated conform to NCHRP 350 Report criteria.
11. Use of pallets is optional.

STATE OF CALIFORNIA
DEPARTMENT OF TRANSPORTATION

TEMPORARY CRASH CUSHION, SAND FILLED (SHOULDER INSTALLATIONS)

NO SCALE

RSP T2 DATED JUNE 6, 2008 SUPERSEDES STANDARD PLAN T2
DATED MAY 1, 2006 - PAGE 213 OF THE STANDARD PLANS BOOK DATED MAY 2006.

REVISED STANDARD PLAN RSP T2

2006 REVISED STANDARD PLAN RSP T2

5-15-08

Dist	COUNTY	ROUTE	POST MILES TOTAL PROJECT	SHEET No.	TOTAL SHEETS
04	Ala	680	M3.6/R6.5	106	163

Randell D. Hiatt
REGISTERED CIVIL ENGINEER

May 20, 2011
PLANS APPROVAL DATE

REGISTERED PROFESSIONAL ENGINEER
Randell D. Hiatt
No. C50200
Exp. 6-30-11
CIVIL
STATE OF CALIFORNIA

The State of California or its officers or agents shall not be responsible for the accuracy or completeness of electronic copies of this plan sheet.

To accompany plans dated 6-18-12

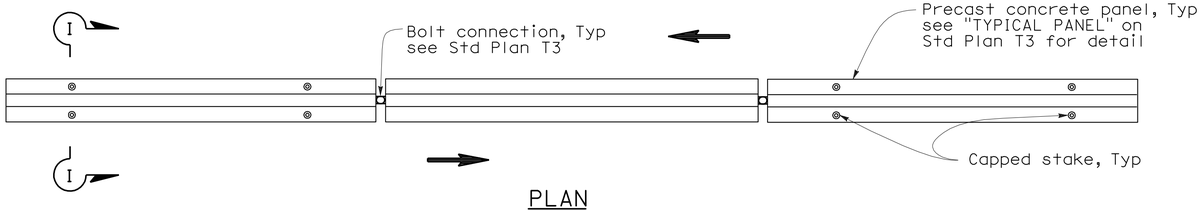

PLAN

RAILING STAKING CONFIGURATION FOR TWO-WAY TRAFFIC

See Note 1

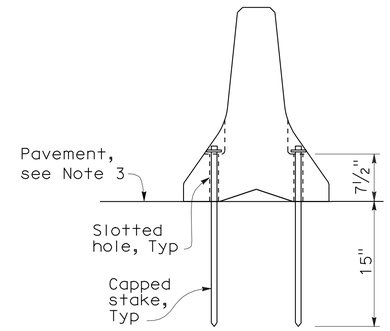

SECTION I-I

NOTES:

1. Where Type K Temporary Railing is placed as a temporary or long term barrier in two-way traffic on highways with less than 24" from the edge of traveled way, use four capped stakes per every other panel with end panels staked.
2. Where Type K Temporary Railing is placed 3" to 24" from the edge of an excavation on highways, use two capped stakes per panel along the traffic side.
3. Staked Type K Temporary Railing must be supported by at least 4" thick concrete, hot mix asphalt or existing asphalt concrete pavement.
4. The minimum yield strength for the washer must be 60,000 psi.
5. Direction of adjacent traffic indicated by ⟹.

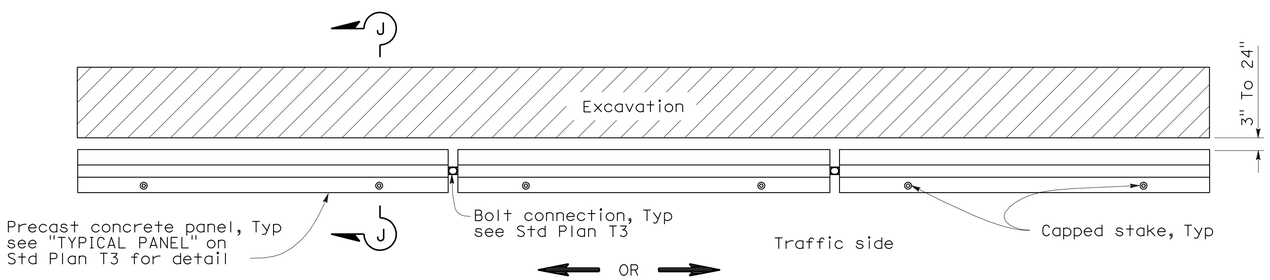

PLAN

RAILING STAKING CONFIGURATION ADJACENT TO AN EXCAVATION

See Note 2

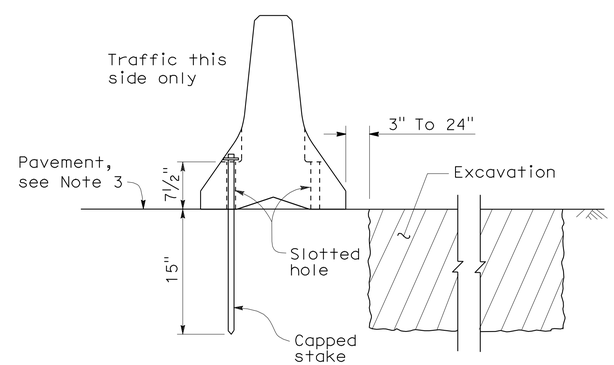

SECTION J-J

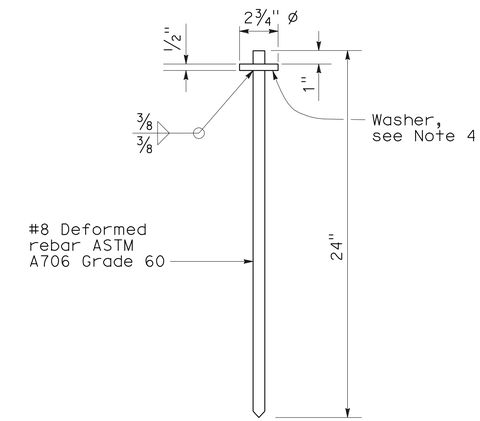

CAPPED STAKE DETAIL

STATE OF CALIFORNIA
DEPARTMENT OF TRANSPORTATION

TEMPORARY RAILING (TYPE K)

NO SCALE

NSP T3A DATED MAY 20, 2011 SUPPLEMENTS
THE STANDARD PLANS BOOK DATED MAY 2006.

NEW STANDARD PLAN NSP T3A

2006 NEW STANDARD PLAN NSP T3A

DIST	COUNTY	ROUTE	POST MILES TOTAL PROJECT	SHEET NO.	TOTAL SHEETS
04	Ala	680	M3.6/R6.5	107	163

REGISTERED CIVIL ENGINEER

November 17, 2006
PLANS APPROVAL DATE

REGISTERED PROFESSIONAL ENGINEER
Greg W. Edwards
No. C36386
Exp. 6-30-08
CIVIL
STATE OF CALIFORNIA

The State of California or its officers or agents shall not be responsible for the accuracy or completeness of electronic copies of this plan sheet.

To accompany plans dated 6-18-12

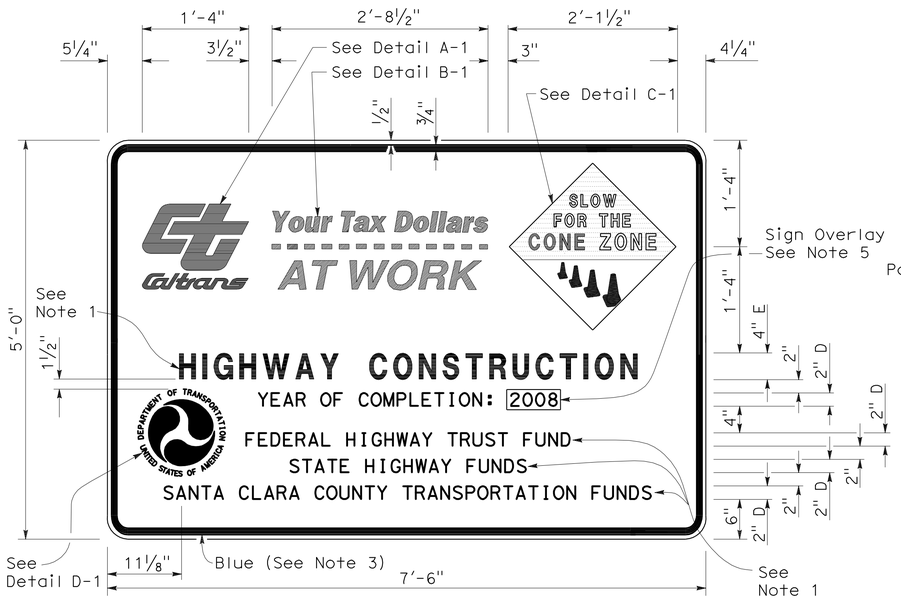

TYPE 1

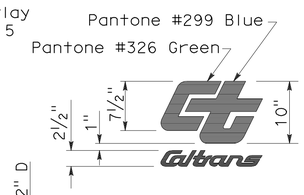

DETAIL A-1

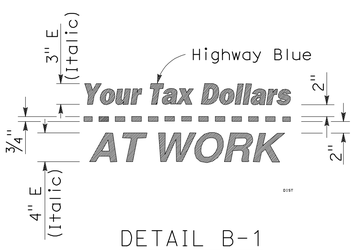

DETAIL B-1
(See Note 3)

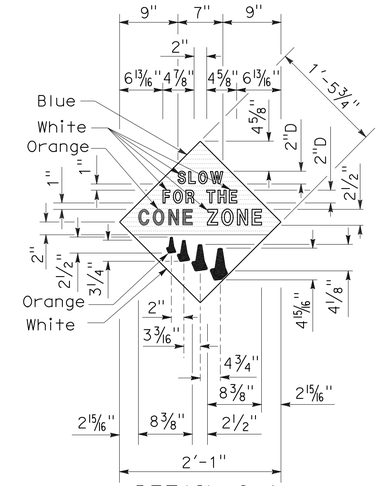

DETAIL C-1
(See Note 4)

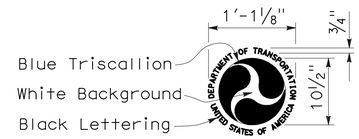

DETAIL D-1
(See Note 6)

NOTES:

1. The sign messages shown for type of project and fund types are examples only. See the Special Provisions for the applicable type of project and fund type messages to be used.
2. Except as otherwise shown, the legend of sign shall be black on a white background (non-reflective).
3. The border of the signs and details "B-1" and "B-2" shall be blue (non-reflective).
4. The diamond in details "C-1" and "C-2" shall be blue for the background of message, " SLOW FOR THE CONE ZONE", and white background for the orange cones. The color and type of font for the "SLOW FOR THE CONE ZONE" message shall be: "SLOW" white D; "FOR THE" white D; "CONE" orange Arial font; "ZONE" white Arial font.
5. Year of completion of project construction shown on the overlay is an example only. See the Special Provisions.
6. Use when the Project involves Federal Highway Trust Fund.

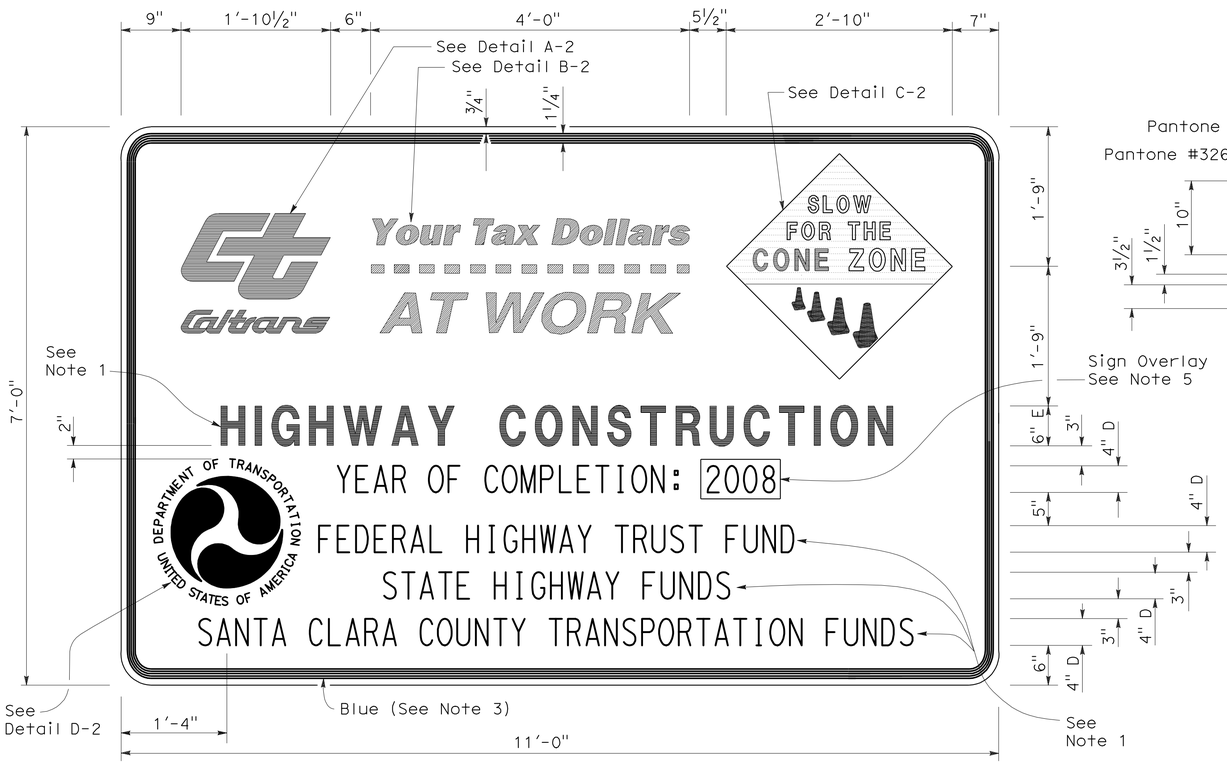

TYPE 2

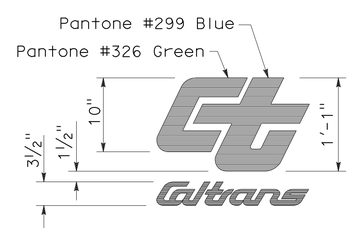

DETAIL A-2

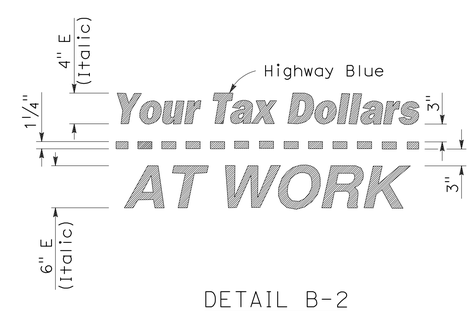

DETAIL B-2
(See Note 3)

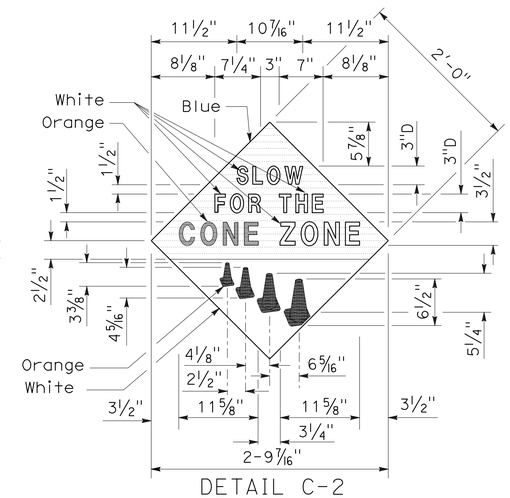

DETAIL C-2
(See Note 4)

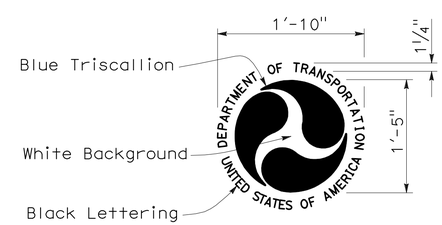

DETAIL D-2
(See Note 6)

STATE OF CALIFORNIA
DEPARTMENT OF TRANSPORTATION

CONSTRUCTION PROJECT FUNDING IDENTIFICATION SIGNS

NO SCALE

RSP T7 DATED NOVEMBER 17, 2006 SUPERSEDES STANDARD PLAN T7
DATED MAY 1, 2006 - PAGE 217 OF THE STANDARD PLANS BOOK DATED MAY 2006.

REVISED STANDARD PLAN RSP T7

2006 REVISED STANDARD PLAN RSP T7

9-7-06

DIST	COUNTY	ROUTE	POST MILES TOTAL PROJECT	SHEET NO.	TOTAL SHEETS
04	Ala	680	M3.6/R6.5	108	163

Robert B Schott
LICENSED LANDSCAPE ARCHITECT

April 3, 2009
PLANS APPROVAL DATE

LICENSED LANDSCAPE ARCHITECT
Robert B. Schott 3635
Signature
11-30-10
Renewal Date
2-25-09
Date
STATE OF CALIFORNIA

The State of California or its officers or agents shall not be responsible for the accuracy or completeness of electronic copies of this plan sheet.

To accompany plans dated 6-18-12

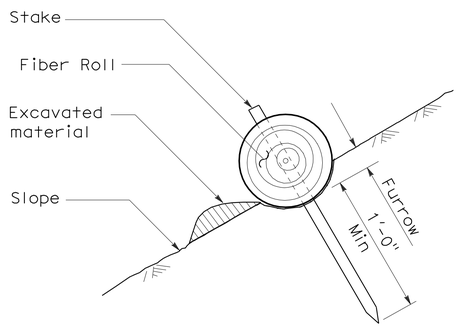

SECTION

TEMPORARY FIBER ROLL (TYPE 1)

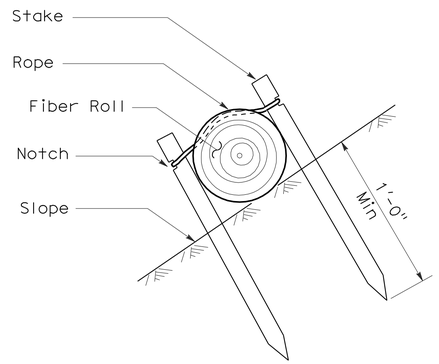

SECTION

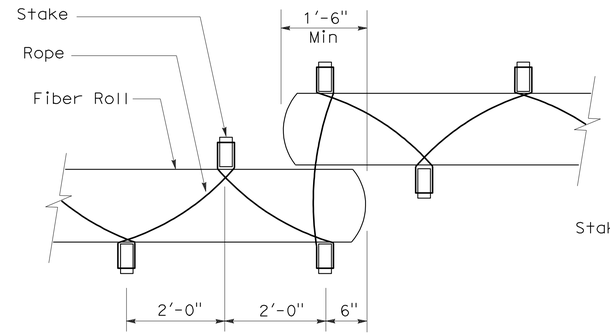

PLAN

TEMPORARY FIBER ROLL (TYPE 2)

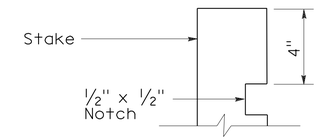

ELEVATION

STAKE NOTCH DETAIL

NOTES:

1. Temporary fiber roll spacing varies depending upon slope inclination.
2. Installations shown in the perspectives are for slope inclination of 10:1 and steeper.

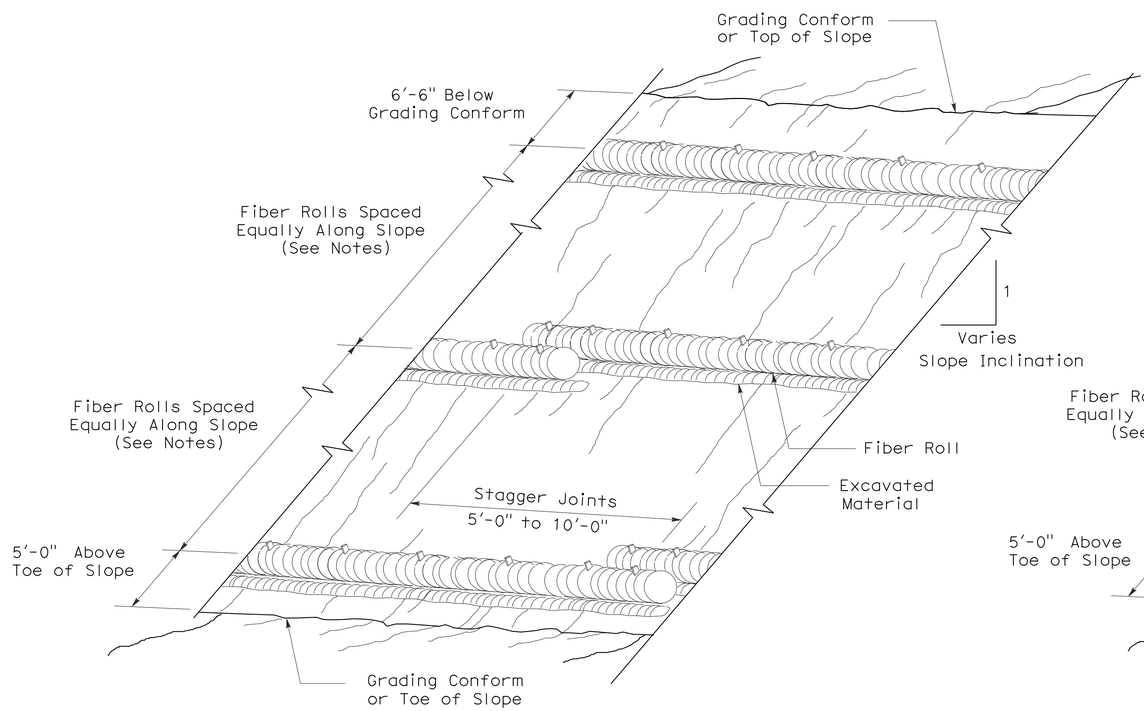

PERSPECTIVE

TEMPORARY FIBER ROLL (TYPE 1)

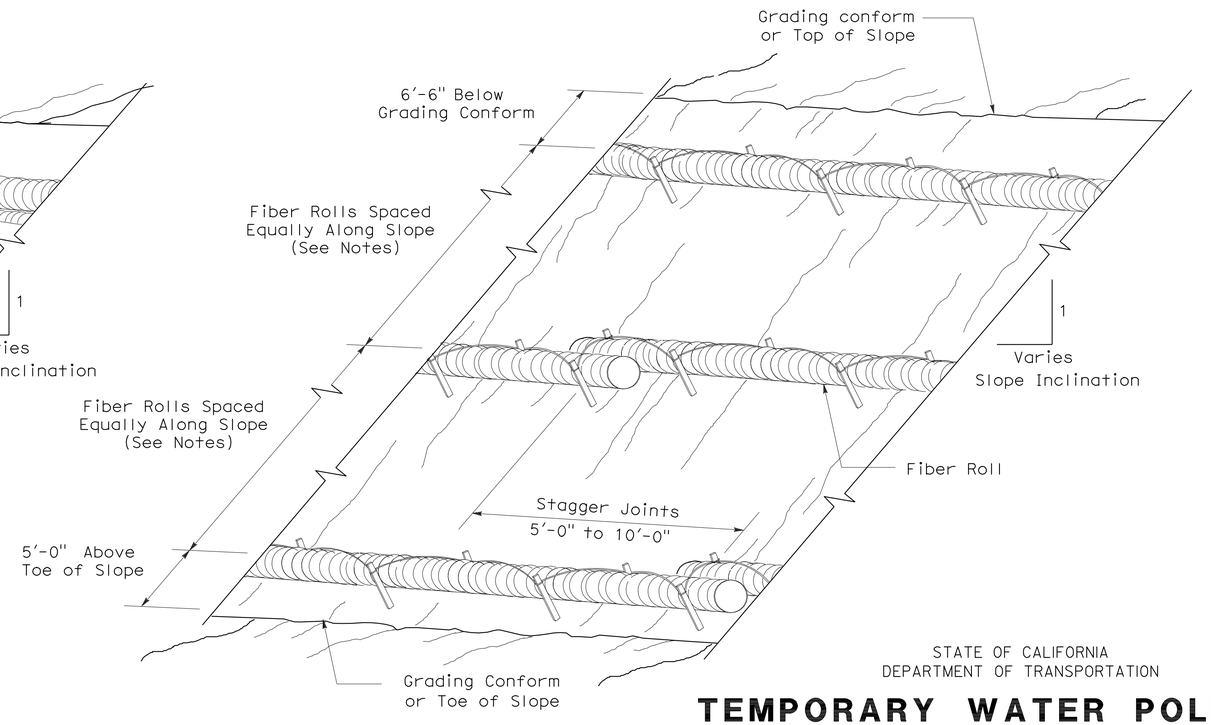

PERSPECTIVE

TEMPORARY FIBER ROLL (TYPE 2)

STATE OF CALIFORNIA
DEPARTMENT OF TRANSPORTATION

TEMPORARY WATER POLLUTION CONTROL DETAILS (TEMPORARY FIBER ROLL)

NO SCALE

RSP T56 DATED APRIL 3, 2009 SUPERSEDES STANDARD PLAN T56
DATED MAY 1, 2006 - PAGE 232 OF THE STANDARD PLANS BOOK DATED MAY 2006.

REVISED STANDARD PLAN RSP T56

2006 REVISED STANDARD PLAN RSP T56

2-23-09

DIST	COUNTY	ROUTE	POST MILES TOTAL PROJECT	SHEET NO.	TOTAL SHEETS
04	Ala	680	M3.6/R6.5	109	163

LICENSED LANDSCAPE ARCHITECT

August 15, 2008
PLANS Approval DATE

LICENSED LANDSCAPE ARCHITECT
Robert B. Schott
Signature
11-04-08
Renewal Date
08-11-08
Date
STATE OF CALIFORNIA

The State of California or its officers or agents shall not be responsible for the accuracy or completeness of electronic copies of this plan sheet.

To accompany plans dated 6-18-12

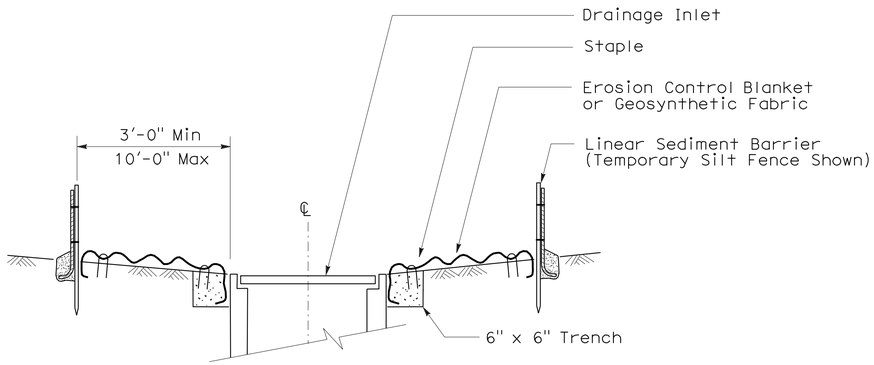

SECTION A-A

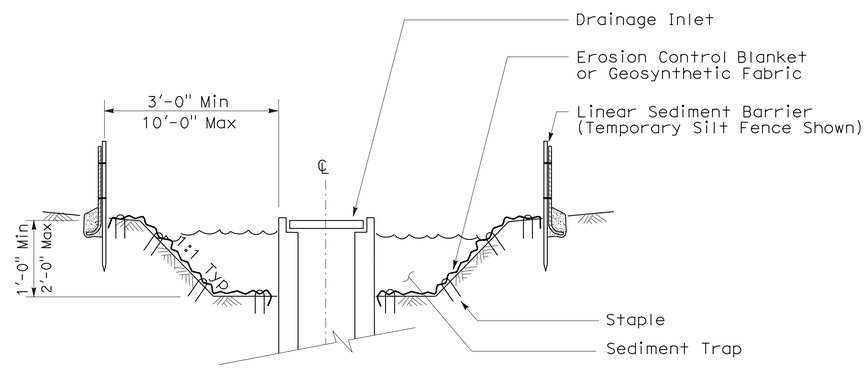

SECTION B-B

NOTES:

1. See Standard Plan T51 for Temporary Silt Fence.
2. Dimensions may vary to fit field conditions.

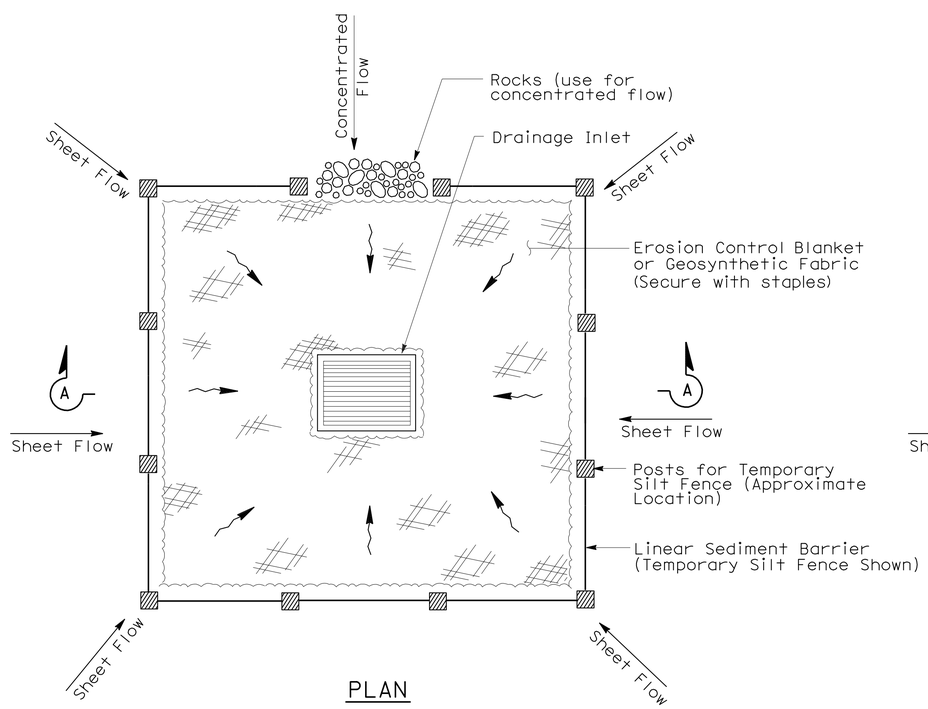

PLAN

TEMPORARY DRAINAGE
INLET PROTECTION (TYPE 1)

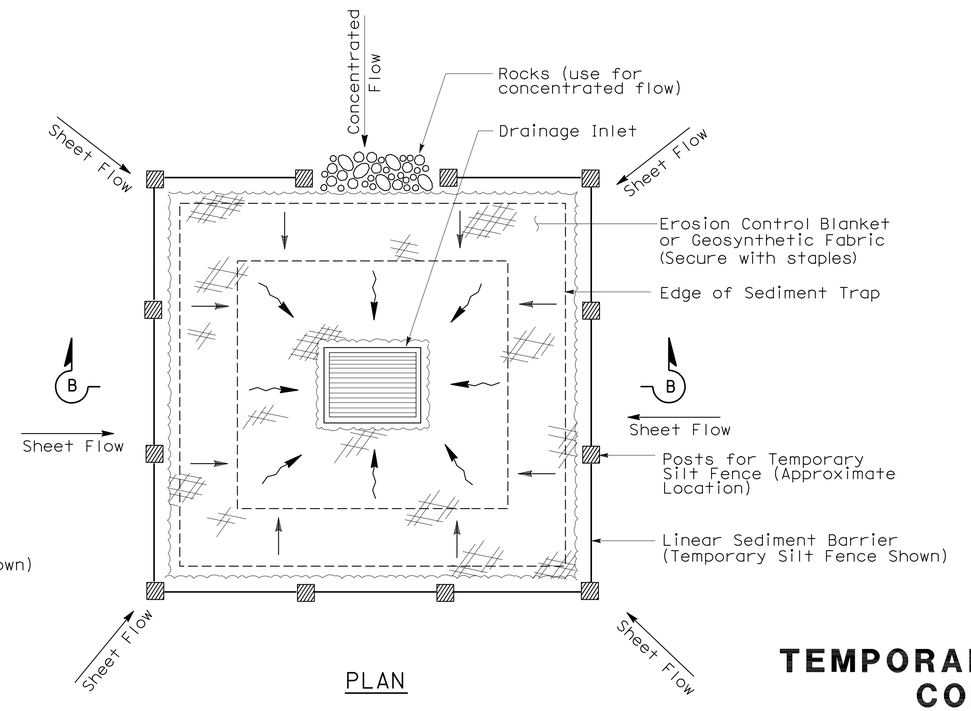

PLAN

TEMPORARY DRAINAGE
INLET PROTECTION (TYPE 2)
(EXCAVATED SEDIMENT TRAP)

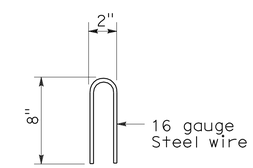

STAPLE DETAIL

STATE OF CALIFORNIA
DEPARTMENT OF TRANSPORTATION

TEMPORARY WATER POLLUTION CONTROL DETAILS (TEMPORARY DRAINAGE INLET PROTECTION)

NO SCALE

NSP T61 DATED AUGUST 15, 2008 SUPPLEMENTS
THE STANDARD PLANS BOOK DATED MAY 2006.

NEW STANDARD PLAN NSP T61

2006 NEW STANDARD PLAN NSP T61

7-11-08

DIST	COUNTY	ROUTE	POST MILES TOTAL PROJECT	SHEET NO.	TOTAL SHEETS
04	Ala	680	M3.6/R6.5	110	163

LICENSED LANDSCAPE ARCHITECT

August 15, 2008
PLANS APPROVAL DATE

The State of California or its officers or agents shall not be responsible for the accuracy or completeness of electronic copies of this plan sheet.

LICENSED LANDSCAPE ARCHITECT — Robert B. Schott — Signature — 11-04-08 Renewal Date — 08-11-08 Date — STATE OF CALIFORNIA

To accompany plans dated 6-18-12

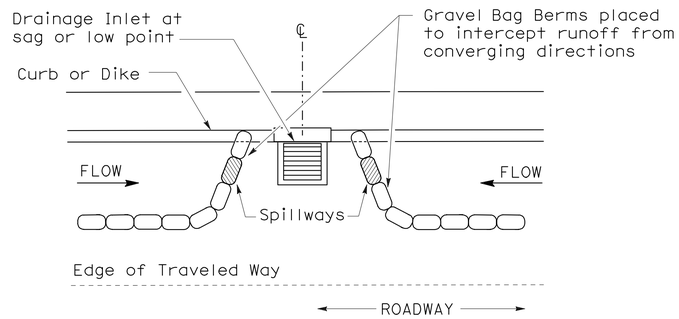

PLAN

CONFIGURATION FOR SAG POINT INLET (GRAVEL BAG BERM)

GRAVEL BAG BERM (TYPE 3A) SPACING TABLE

SLOPE OF ROADWAY (PERCENT)	1 to 3.9	4 to 5.9	6 to 7.9	8 to 10	10+
INTERVAL BETWEEN BERM	100′	75′	50′	25′	12′

For slope of less than 1%, install barriers only if erosion/sediment is prevalent

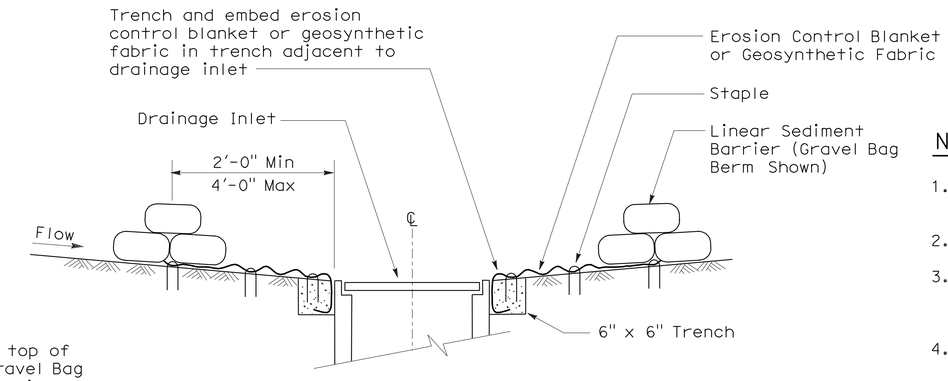

SECTION A-A

NOTES:

1. Place safety cones adjacent to drainage inlet protection.
2. Dimensions may vary to fit field conditions.
3. Install a minimum of 3 gravel bag berms upstream of each drainage inlet to be protected.
4. Position erosion control blanket or geosynthetic fabric at edge of concrete apron and secure in trench.
5. Erosion control blanket or geosynthetic fabric is not required if the area adjacent to the drainage inlet is vegetated or paved.

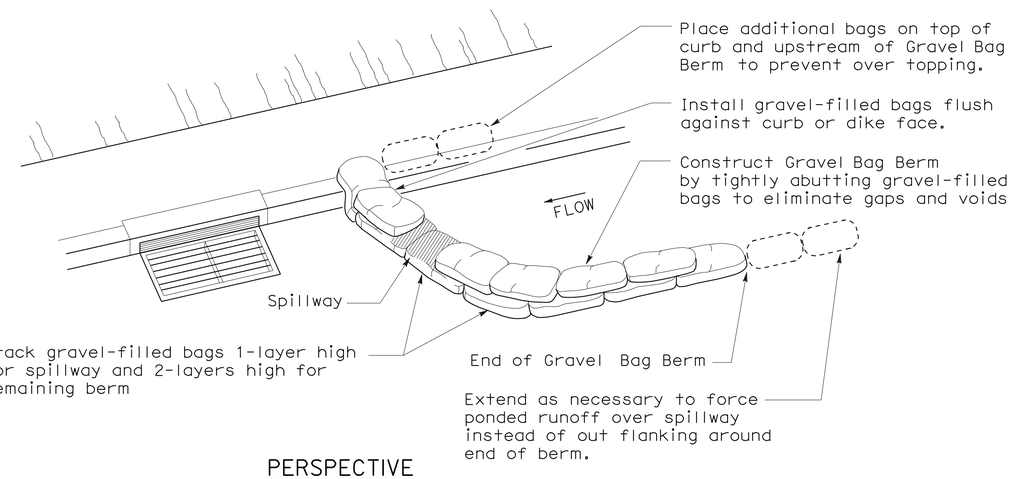

PERSPECTIVE

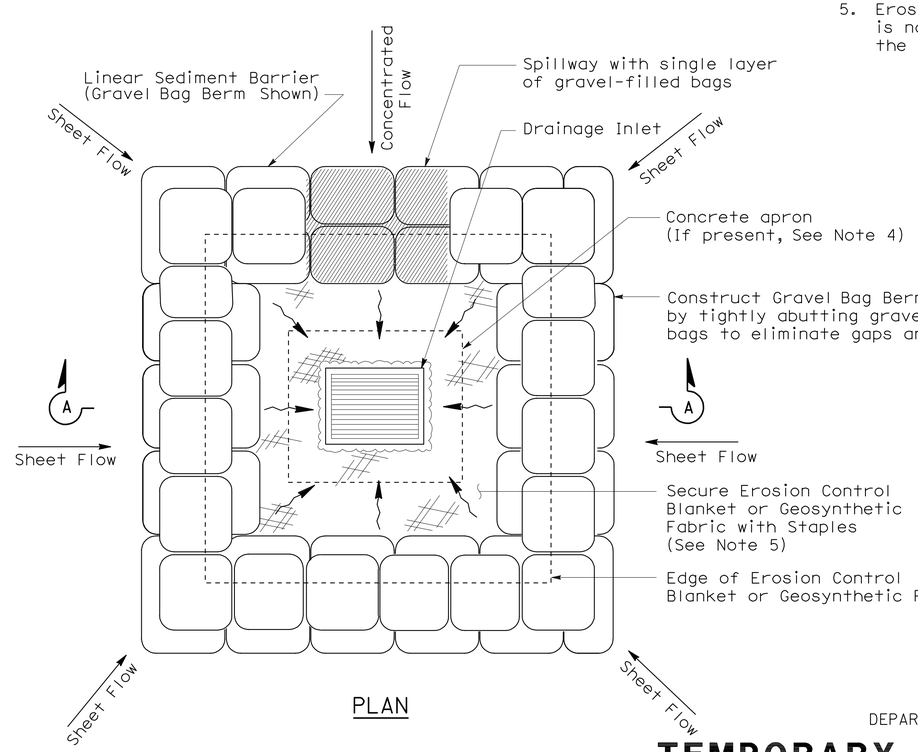

PLAN

TEMPORARY DRAINAGE INLET PROTECTION (TYPE 3B)

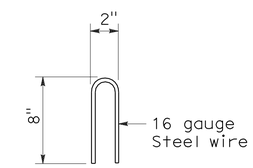

STAPLE DETAIL

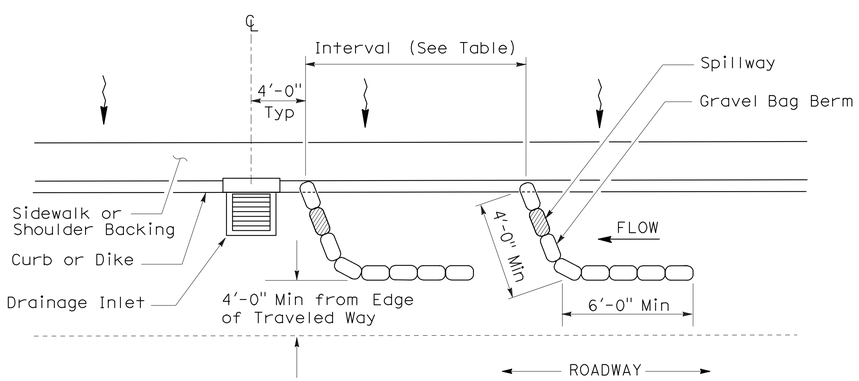

PLAN

TEMPORARY DRAINAGE INLET PROTECTION (TYPE 3A) (GRAVEL BAG BERM)

STATE OF CALIFORNIA
DEPARTMENT OF TRANSPORTATION

TEMPORARY WATER POLLUTION CONTROL DETAILS (TEMPORARY DRAINAGE INLET PROTECTION)

NO SCALE

NSP T62 DATED AUGUST 15, 2008 SUPPLEMENTS THE STANDARD PLANS BOOK DATED MAY 2006.

NEW STANDARD PLAN NSP T62

2006 NEW STANDARD PLAN NSP T62

7-11-08

DIST	COUNTY	ROUTE	POST MILES TOTAL PROJECT	SHEET NO.	TOTAL SHEETS
04	Ala	680	M3.6/R6.5	111	163

LICENSED LANDSCAPE ARCHITECT

August 15, 2008
PLANS APPROVAL DATE

The State of California or its officers or agents shall not be responsible for the accuracy or completeness of electronic copies of this plan sheet.

LICENSED LANDSCAPE ARCHITECT Robert B. Schott 3025 Signature 11-04-08 Renewal Date 08-11-08 Date STATE OF CALIFORNIA

To accompany plans dated 6-18-12

FLEXIBLE SEDIMENT BARRIER SPACING TABLE

SLOPE OF ROADWAY (PERCENT)	0 to 0.9	1 to 1.9	2 to 2.9	3 to 4	5+
INTERVAL BETWEEN BARRIERS	50′	35′	30′	25′	20′
ANGLE FROM FACE OF CURB	70°	70°	70°	45°	45°
SUGGESTED BARRIER LENGTH	6′	6′	6′	6′	6′

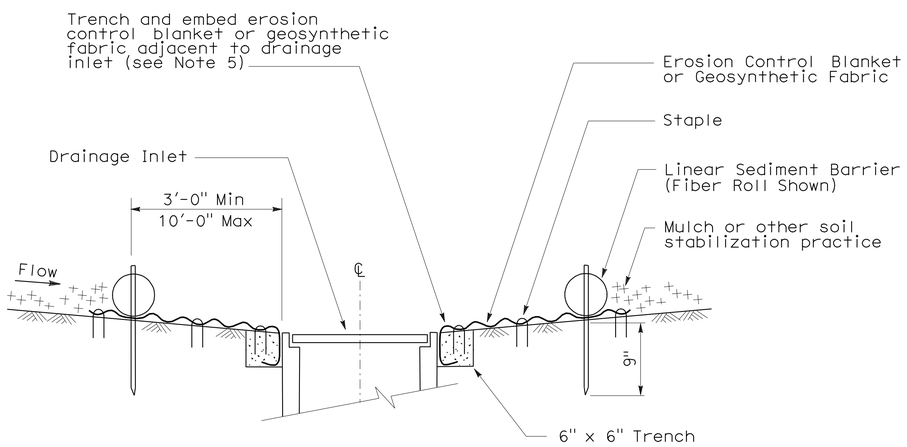

SECTION A-A

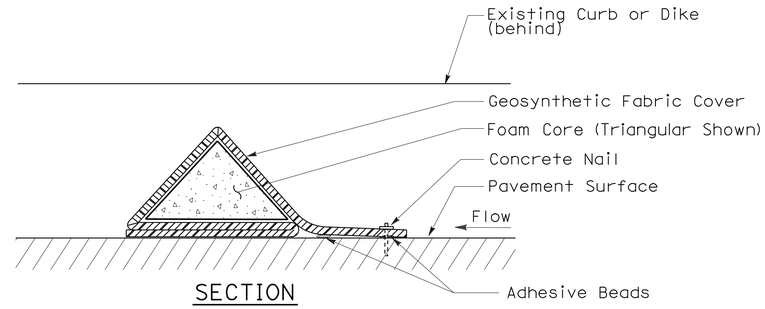

SECTION

FLEXIBLE SEDIMENT BARRIER DETAIL (FOAM BARRIER SHOWN)

NOTES:

1. See Standard Plan T51 for Temporary Silt Fence.
2. Dimensions may vary to fit field conditions.
3. Install a minimum of 3 flexible sediment barriers upstream of each drainage inlet to be protected.
4. Position erosion control blanket or geosynthetic fabric at edge of concrete apron and secure in trench.
5. Erosion control blanket or geosynthetic fabric is not required if the area adjacent to the drainage inlet is vegetated.

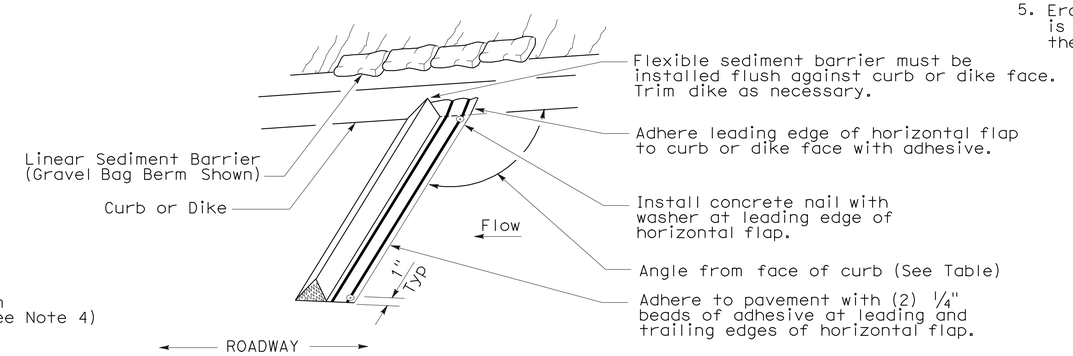

PERSPECTIVE

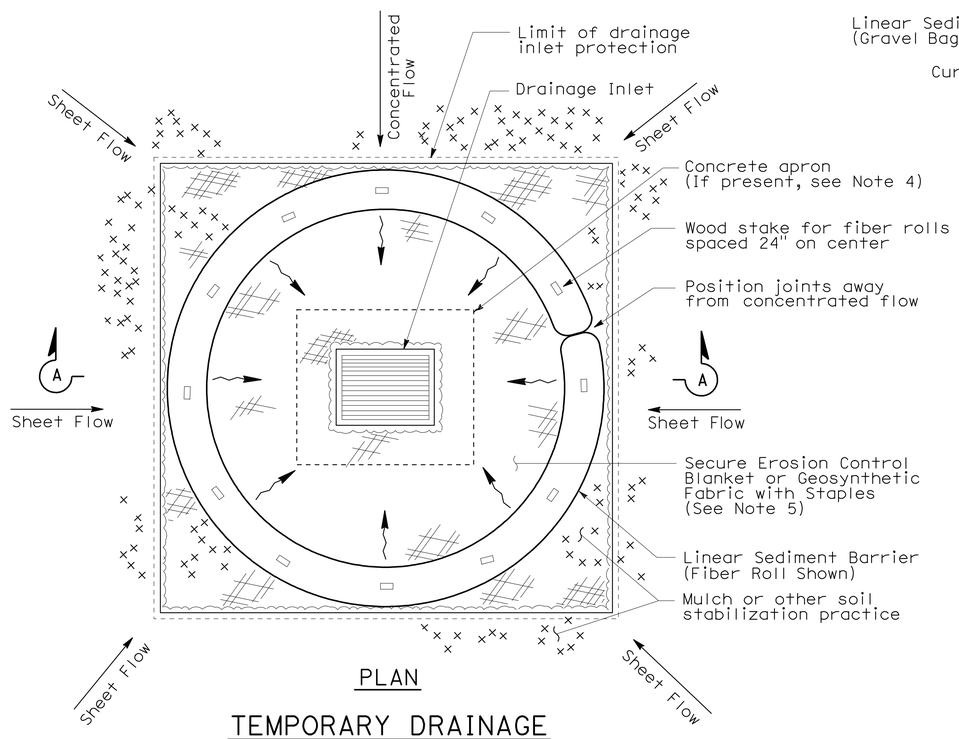

PLAN

TEMPORARY DRAINAGE INLET PROTECTION (TYPE 4A)

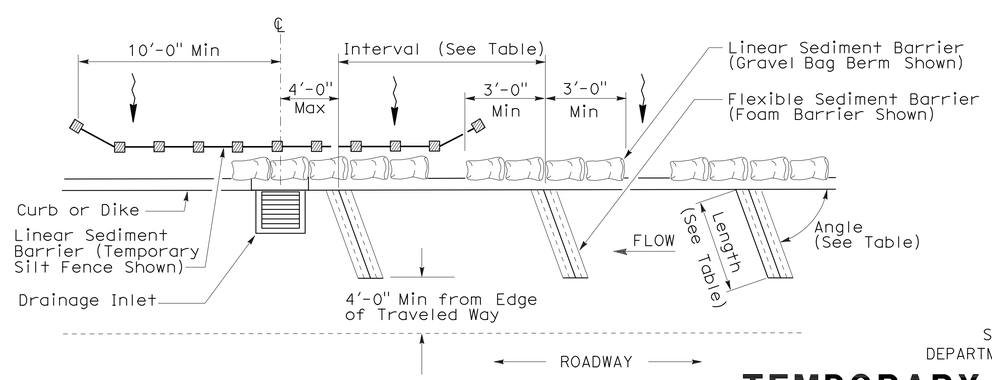

PLAN

TEMPORARY DRAINAGE INLET PROTECTION (TYPE 4B) FLEXIBLE SEDIMENT BARRIER

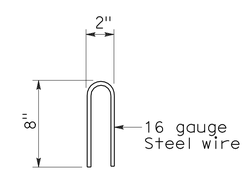

STAPLE DETAIL

STATE OF CALIFORNIA
DEPARTMENT OF TRANSPORTATION

TEMPORARY WATER POLLUTION CONTROL DETAILS (TEMPORARY DRAINAGE INLET PROTECTION)

NO SCALE

NSP T63 DATED AUGUST 15, 2008 SUPPLEMENTS THE STANDARD PLANS BOOK DATED MAY 2006.

NEW STANDARD PLAN NSP T63

2006 NEW STANDARD PLAN NSP T63

7-11-08

DIST	COUNTY	ROUTE	POST MILES TOTAL PROJECT	SHEET NO.	TOTAL SHEETS
04	Ala	680	M3.6/R6.5	112	163

LICENSED LANDSCAPE ARCHITECT

August 15, 2008
PLANS APPROVAL DATE

The State of California or its officers or agents shall not be responsible for the accuracy or completeness of electronic copies of this plan sheet.

LICENSED LANDSCAPE ARCHITECT — ROBERT B. SCHOTT — Signature — 11-04-08 Renewal Date — 08-11-08 Date — STATE OF CALIFORNIA

To accompany plans dated 6-18-12

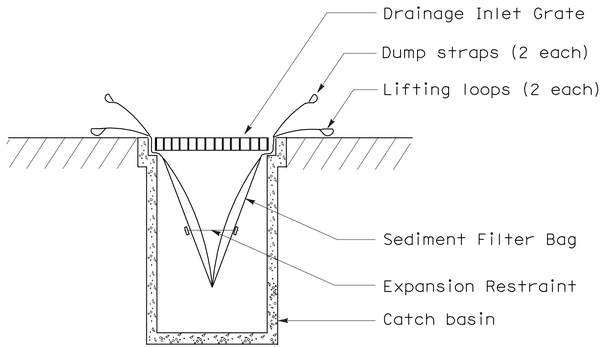

SECTION B-B

SEDIMENT FILTER BAG DETAIL

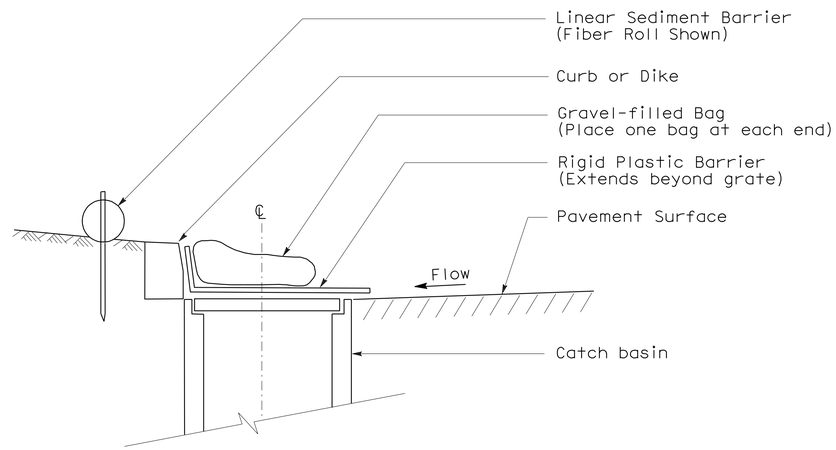

SECTION

TEMPORARY DRAINAGE INLET PROTECTION (TYPE 6A) (CATCH BASIN WITH GRATE)

NOTES:

1. See Standard Plan T51 for Temporary Silt Fence.
2. Dimensions may vary to fit field conditions.

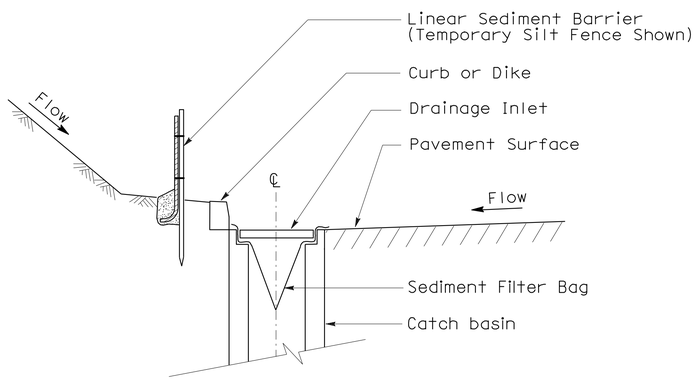

SECTION A-A

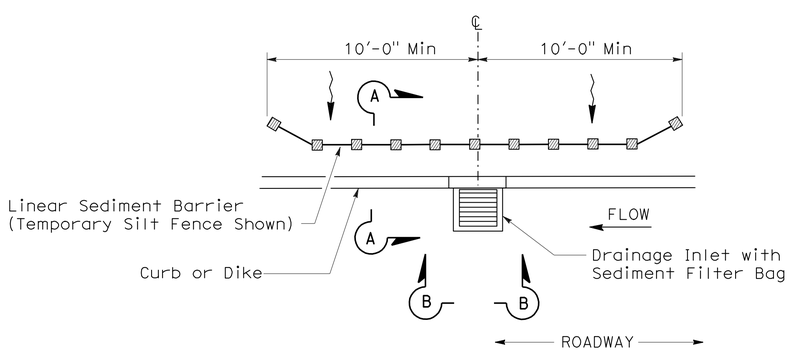

PLAN

TEMPORARY DRAINAGE INLET PROTECTION (TYPE 5) (SEDIMENT FILTER BAG)

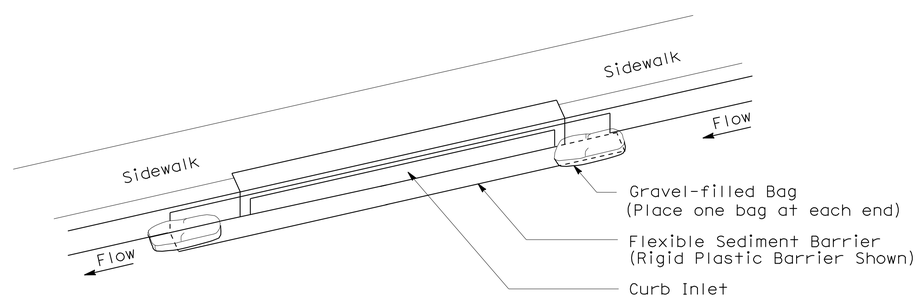

PERSPECTIVE

TEMPORARY DRAINAGE INLET PROTECTION (TYPE 6B) (CURB INLET WITHOUT GRATE)

STATE OF CALIFORNIA
DEPARTMENT OF TRANSPORTATION

TEMPORARY WATER POLLUTION CONTROL DETAILS (TEMPORARY DRAINAGE INLET PROTECTION)

NO SCALE

NSP T64 DATED AUGUST 15, 2008 SUPPLEMENTS THE STANDARD PLANS BOOK DATED MAY 2006.

NEW STANDARD PLAN NSP T64

2006 NEW STANDARD PLAN NSP T64

7-11-08

DIST	COUNTY	ROUTE	POST MILES TOTAL PROJECT	SHEET NO.	TOTAL SHEETS
04	Ala	680	M3.6/R6.5	113	163

LICENSED LANDSCAPE ARCHITECT

April 3, 2009
PLANS APPROVAL DATE

The State of California or its officers or agents shall not be responsible for the accuracy or completeness of electronic copies of this plan sheet.

LICENSED LANDSCAPE ARCHITECT — Robert B. Schott — 3025 — Signature — 11-30-10 Renewal Date — 2-25-09 Date — STATE OF CALIFORNIA

To accompany plans dated 6-18-12

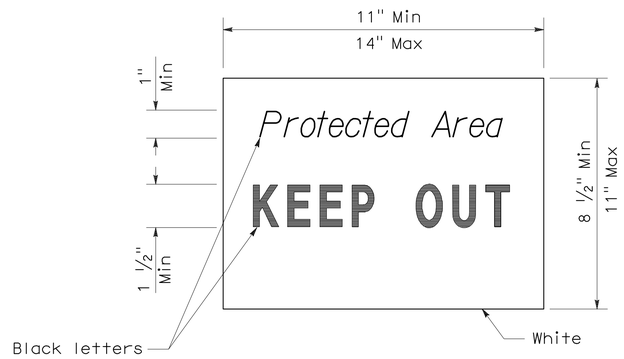

SIGN DETAIL

NOTE:

1. Temporary silt fence and temporary straw bale barrier shown for reference purposes only.

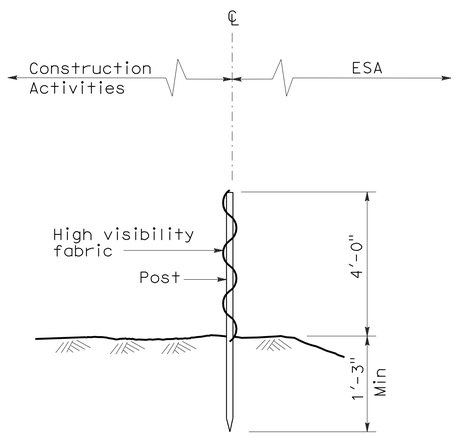

SECTION
TEMPORARY FENCE (TYPE ESA)

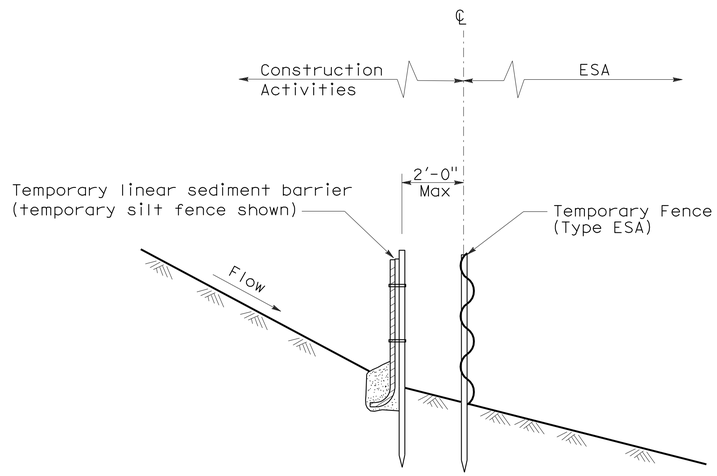

SECTION
PLACEMENT DETAIL
FOR TEMPORARY LINEAR SEDIMENT BARRIER
USED WITH TEMPORARY
FENCE (TYPE ESA)
(See Note 1)

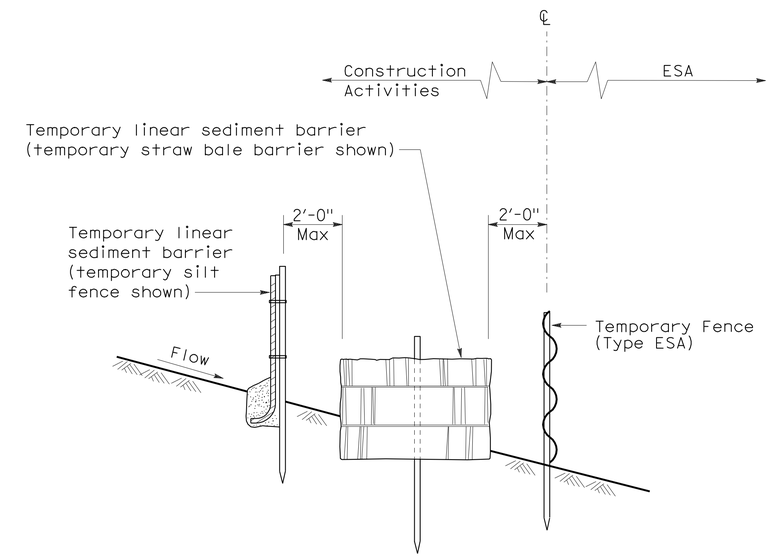

SECTION
PLACEMENT DETAIL
FOR TEMPORARY SILT FENCE
AND TEMPORARY STRAW BALE BARRIER
USED WITH TEMPORARY FENCE (TYPE ESA)
(See Note 1)

STATE OF CALIFORNIA
DEPARTMENT OF TRANSPORTATION

TEMPORARY WATER POLLUTION CONTROL DETAILS [TEMPORARY FENCE (TYPE ESA)]

NO SCALE

NSP T65 DATED APRIL 3, 2009 SUPPLEMENTS
THE STANDARD PLANS BOOK DATED MAY 2006.

NEW STANDARD PLAN NSP T65

2006 NEW STANDARD PLAN NSP T65

DIST	COUNTY	ROUTE	POST MILES TOTAL PROJECT	SHEET NO.	TOTAL SHEETS
04	Ala	680	M3.6/R6.5	114	163

REGISTERED ELECTRICAL ENGINEER

October 5, 2007
PLANS APPROVAL DATE

REGISTERED PROFESSIONAL ENGINEER Jeffery G. McRae No. E14512 Exp. 6-30-08 ELECTRICAL STATE OF CALIFORNIA

The State of California or its officers or agents shall not be responsible for the accuracy or completeness of electronic copies of this plan sheet.

To accompany plans dated 6-18-12

ELECTROLIERS

STANDARD TYPES
15, 15D
15 STRUCTURE
21, 21D STRUCTURE
30
31
32
35
36-20A

High mast light pole

Double Arm lighting standard

Existing electrolier

Electrolier foundation (Future installation)

NOTES:

1. Luminaires shall be 310 W HPS when installed on Type 21, 21D, 30, 31, 32, 35 and 36-20A Standards, unless otherwise specified. Luminaires shall be 200 W HPS when installed on other type standards or poles, unless otherwise specified.
2. Luminaires shall be the cutoff type, ANSI Type III medium cutoff lighting distribution, unless otherwise specified.
3. Variations noted adjacent to symbol on project plans.

Electrolier (see project notes or project plans)

Luminaire on wood pole

STANDARD NOTES:

- AB — Abandon. If applied to conduit, remove conductors.
- BC — Install pull box in existing conduit run.
- BP — Pedestrian barricade, type as indicated on plan.
- CB — Install conduit into existing pull box.
- CC — Connect new and existing conduit. Remove existing conductors and install conductors as indicated.
- CF — Conduit to remain for future use. Remove conductors. Install pull wire or rope.
- DH — Detector handhole.
- FA — Foundation to be abandoned.
- IS — Install sign on signal mast arm.
- NS — No slip base on standard.
- PEC — Photoelectric control.
- PEU — Photoelectric unit.
- RC — Equipment or material to be removed and become the property of the Contractor.
- RE — Remove electrolier, fuses and ballast. Tape ends of conductors.
- RL — Relocate equipment.
- RR — Remove and reuse equipment.
- RS — Remove and salvage equipment.
- SC — Splice new to existing conductors.
- SD — Service disconnect.
- SF — Standard to remain for future use. Remove luminaire, pole conductors, fuses and ballast.
- TSP — Telephone service point.

ABBREVIATIONS AND EQUIPMENT DESIGNATIONS

PROPOSED	EXISTING	
BBS	bbs	Battery backup system
BC	bc	Bolt circle
C	C	Conduit
CCTV	cctv	Closed circuit television
CKT	ckt	Circuit
CMS	cms	Changeable message sign
DLC	dlc	Loop detector lead-in cable
EMS	ems	Extinguishable message sign
EVC	evc	Emergency vehicle cable
EVD	evd	Emergency vehicle detector
FB	fb	Flashing beacon
FBCA	fbca	Flashing beacon control assembly
FBS	fbs	Flashing beacon with slip base
FO	fo	Fiber optic
G	G	Ground (Equipment Grounding Conductor)
GFCI	GFCI	Ground fault circuit interrupt
HAR	har	Highway advisory radio
HEX	hex	Hexagonal
HPS	hps	High pressure sodium
IISNS	iisns	Internally illuminated street name sign
ISL	isl	Induction sign lighting
LED	led	Light emitting diode
LMA	lma	Luminaire mast arm
LPS	lps	Low pressure sodium
LTG	ltg	Lighting
LUM	lum	Luminaire
MAT	mat	Mast arm mounting vehicle signal faces, top attachment
MAS	mas	Mast arm mounting vehicle signal faces, side attachment
MAS-4A	mas-4A	Mast arm mounting vehicle signal faces, side attachment - 4 signal section
MAS-4B	mas-4B	
MAS-4C	mas-4C	
MAS-5A	mas-5A	Mast arm mounting vehicle signal faces, side attachment - 5 signal section
MAS-5B	mas-5B	
MC	mc	Mercury contactor
M/M	m/m	Multiple to multiple transformer
MT	mt	Conduit with pull wire or rope only
MTG	mtg	Mounting
	mv	Mercury vapor lighting fixture
N	N	Neutral (Grounded Conductor)
NC	NC	Normally closed
NO	NO	Normally open
PB	pb	Pull box
PEC	pec	Photoelectric control (Type I, II, III, IV or V as shown)
PED	ped	Pedestrian
PEU	peu	Photoelectric unit
PPB	ppb	Pedestrian push button
RL		Relocated equipment
RM	rm	Ramp metering
SB	sb	Slip base
SIC	sic	Signal interconnect cable
SIG	sig	Signal
SMA	sma	Signal mast arm
SNS	sns	Street name sign
SP	sp	Service point
TDC	tdc	Telephone demarcation cabinet
TMS	tms	Traffic monitoring station
TOS	tos	Traffic Operations System
VEH	veh	Vehicle
XFMR	xfmr	Transformer
COMM	comm	Communication
RWIS	rwis	Roadway weather information system

SOFFIT AND WALL MOUNTED LUMINAIRES

Pendant, 70 W HPS unless otherwise specified.

Flush, 70 W HPS unless otherwise specified.

Wall surface, 70 W HPS unless otherwise specified.

Existing soffit or wall luminaire to remain unmodified.

Existing soffit or wall luminaire to be modified as specified.

NOTE:

Arrow indicates "street side" of luminaire.

STATE OF CALIFORNIA
DEPARTMENT OF TRANSPORTATION

ELECTRICAL SYSTEMS (SYMBOLS AND ABBREVIATIONS)

NO SCALE

RSP ES-1A DATED OCTOBER 5, 2007 SUPERSEDES STANDARD PLAN ES-1A DATED MAY 1, 2006 - PAGE 400 OF THE STANDARD PLANS BOOK DATED MAY 2006.

REVISED STANDARD PLAN RSP ES-1A

2006 REVISED STANDARD PLAN RSP ES-1A

DIST	COUNTY	ROUTE	POST MILES TOTAL PROJECT	SHEET NO.	TOTAL SHEETS
04	Ala	680	M3.6/R6.5	115	163

REGISTERED ELECTRICAL ENGINEER

October 5, 2007
PLANS APPROVAL DATE

REGISTERED PROFESSIONAL ENGINEER Jeffery G. McRae No. E14512 Exp. 6-30-08 ELECTRICAL STATE OF CALIFORNIA

The State of California or its officers or agents shall not be responsible for the accuracy or completeness of electronic copies of this plan sheet.

To accompany plans dated 6-18-12

CONDUIT

PROPOSED	EXISTING	
		Lighting Conduit, unless otherwise indicated or noted
		Traffic signal conduit
C	c	Communication conduit
T	t	Telephone conduit
F	f	Fire alarm conduit
FO	fo	Fiber optic conduit
		Conduit termination (RSP ES-9A C)
R	r	Conduit riser in/on structure or service pole

SERVICE EQUIPMENT

PROPOSED	EXISTING	
OH	oh	Overhead lines
U	U	Wood pole "U" indicates utility owned
		Pole guy with anchor
		Utility transformer - ground mounted
III		Service equipment enclosure type
		Service equipment enclosure door indicates front of enclosure
T	t	Telephone demarcation cabinet

POLE-MOUNTED SERVICE DESIGNATION

Type of installation

TYPE H SERVICE - 28'-10" ← Pole height above grade

ILLUMINATED OVERHEAD SIGN

PROPOSED	EXISTING	
		Overhead sign - Single post
		Overhead sign - Two post
		Overhead sign - Mounted on structure
		Overhead sign with electrolier

SIGNAL EQUIPMENT

PROPOSED	EXISTING	
		Pedestrian signal face
		Pedestrian push button post
		Pedestrian barricade
		Vehicle signal face (with backplate, 3-Section: red, yellow and green)
		Vehicle signal face with angle visors
PV	PV	Modifications of basic symbols: "L" indicates all non-arrow sections louvered "LG" indicates louvered green section only "PV" indicates 12" programmed visibility sections "8" indicates all 8" sections (only when specified)
		Type 15TS and Vehicle signal face
		Vehicle signal face with red, yellow and green left arrow sections
		Vehicle signal face with red and yellow sections and up green arrow
		Vehicle signal face (5 Section) with red, yellow and green sections and yellow and green right arrows
		Type 1 Standard and attached vehicle signal faces
		Standard with signal mast arm only and attached vehicle signal faces and internally illuminated street name sign
		Type 33 Standard, Left-turn vehicle signal face and sign
		Standard with luminaire and signal mast arms and attached vehicle signal faces
		Cantilever flashing beacon Type 9 Frame, with a sign unless otherwise specified or indicated
		Type 15-FBS Standard with two vehicle signal face sections with lens, backplate and visor with a sign
R	Y	Flashing beacon. One vehicle signal face section with lens, backplate and visor. "R" indicates red indication, "Y" indicates yellow indication
		Controller assembly. Door indicates front of cabinet

SIGNAL EQUIPMENT Cont

PROPOSED	EXISTING	
		Guard post
		Type 1 Standard with "Meter On" sign
		Emergency Vehicle detector

NOTES:

1. All signal sections shall be 12" unless shown otherwise.
2. Signal heads shall be provided with backplates unless shown otherwise.
3. Signal indication shall be LED.

STATE OF CALIFORNIA
DEPARTMENT OF TRANSPORTATION

ELECTRICAL SYSTEMS (SYMBOLS AND ABBREVIATIONS)

NO SCALE

RSP ES-1B DATED OCTOBER 5, 2007 SUPERCEDES STANDARD PLAN ES-1B DATED MAY 1, 2006 - PAGE 401 OF THE STANDARD PLANS BOOK DATED MAY 2006.

REVISED STANDARD PLAN RSP ES-1B

2006 REVISED STANDARD PLAN RSP ES-1B

DIST	COUNTY	ROUTE	POST MILES TOTAL PROJECT	SHEET NO.	TOTAL SHEETS
04	Ala	680	M3.6/R6.5	116	163

REGISTERED ELECTRICAL ENGINEER

October 5, 2007
PLANS APPROVAL DATE

REGISTERED PROFESSIONAL ENGINEER
Jeffery G. McRae
No. E14512
Exp. 6-30-08
ELECTRICAL
STATE OF CALIFORNIA

The State of California or its officers or agents shall not be responsible for the accuracy or completeness of electronic copies of this plan sheet.

To accompany plans dated 6-18-12

EQUIPMENT IDENTIFICATION

ILLUMINATED SIGN IDENTIFICATION NUMBER:

Sign No. 12345 — Sign number - Place on post or structure

10 ISL SCI 1.0

- 1.0 — Transformer rating (kVA)
- SCI — Lighting control type
- ISL — Number and type of fixtures

Do NOT place on standard or structure

ELECTROLIER OR EQUIPMENT IDENTIFICATION NUMBER:

12345 - 15'-0"

- 15'-0" — Mast arm length, if shown. Do not place on standard or structure.
- 12345 — Equipment number - Place on standard or structure. Existing equipment numbers are shown in parenthesis

CONDUIT AND CONDUCTOR IDENTIFICATION:

1½"C, 2#10, 15#14, 2 DLC

- 2#10, 15#14, 2 DLC — Number and size of conductors and cables
- 1½"C — Size of conduit in inches

Ø1, Ø2, Ø2P, etc.	Traffic phase identification for signal faces, detectors and phase diagrams
1 2 3	Project note numbers
A B C	Equipment description, installation or item numbers
1 2 3	Conduit run numbers

SIGNAL AND LIGHTING STANDARD (TYPICAL DESIGNATION):

19A - 3 - 100

- 100 — Wind velocity = 100 mph
- 3 — Case 3 arm loading
- 19A — Standard type
- Standard Plan sheet number
- Detail number or letter

MISCELLANEOUS EQUIPMENT

PROPOSED	EXISTING	
CMS	cms	Changeable message sign
		Closed circuit television camera
		Highway advisory radio pole and antenna
EMS	ems	Extinguishable message sign
M V	m v	Detection device M = Microwave sensor V = Video image sensor

WIRING DIAGRAM LEGEND

P	Pole
CB	Circuit breaker
A	Ampere
V	Volt
M	Metered
UM	Unmetered
NB	Neutral bus
GB	Ground bus
G	Equipment grounding conductor
N	Grounded conductor (Neutral)

- External conductor
- Conductor or bus
- Tie point
- Contactor coil
- Contactor, Contact NO
- Terminal blocks
- Contactor, Contact NC
- Enclosure bond
- Grounding electrode
- Circuit breaker
- Receptacle

PULL BOXES

PROPOSED EXISTING

Pull box-No. 5 unless otherwise indicated or noted.

3 — 9A(21)

Pull box-Additional designations or descriptions

3 = No. 3½ pull box
5 = No. 5 pull box
6 = No. 6 pull box
7 = No. 7 (Ceiling pull box)
8 = No. 8 (Pendant soffit pull box)
9 = No. 9 pull box
9A = No. 9A pull box

(C) = Communications pull box
(E) = Pull box with extension
(S) = Sprinkler control pull box
(21) = Anchor bolts and conduit for future installation of Type 21 Standard
(T) = Traffic pull box

VEHICLE DETECTORS

5 J 9 U

- U — U = Upper, L = Lower
- 9 — Slot number in input file
- J — Input file (I or J)
- 5 — Phase

PROPOSED	EXISTING	
		Type A detector loop. Outline of sawcut shown.
		Type B detector loop. Outline of sawcut shown.
		Type C detector loop. Outline of sawcut shown.
		Type D detector loop. Outline of sawcut shown.
		Type E detector loop. Outline of sawcut shown.
		Type Q detector loop. Outline of sawcut shown.
		Magnetic detector
DH	dh	Detector handhole
		Microwave or video detection zone

STATE OF CALIFORNIA
DEPARTMENT OF TRANSPORTATION

ELECTRICAL SYSTEMS (SYMBOLS AND ABBREVIATIONS)

NO SCALE

RSP ES-1C DATED OCTOBER 5, 2007 SUPERCEDES STANDARD PLAN ES-1C DATED MAY 1, 2006 - PAGE 402 OF THE STANDARD PLANS BOOK DATED MAY 2006.

REVISED STANDARD PLAN RSP ES-1C

2006 REVISED STANDARD PLAN RSP ES-1C

DIST	COUNTY	ROUTE	POST MILES TOTAL PROJECT	SHEET NO.	TOTAL SHEETS
04	Ala	680	M3.6/R6.5	117	163

REGISTERED ELECTRICAL ENGINEER

October 5, 2007
PLANS APPROVAL DATE

REGISTERED PROFESSIONAL ENGINEER
Jeffery G. McRae
No. E14512
Exp. 6-30-08
ELECTRICAL
STATE OF CALIFORNIA

The State of California or its officers or agents shall not be responsible for the accuracy or completeness of electronic copies of this plan sheet.

To accompany plans dated 6-18-12

2006 REVISED STANDARD PLAN RSP ES-2C

NOTES-TYPE III SERVICE EQUIPMENT ENCLOSURES:

1. Service equipment enclosure and metering equipment shall meet the requirements of the service utility. The meter area shall have a sealable, lockable, weathertight cover that can be removed without the use of tools.

2. Service equipment enclosures shall be factory wired and conform to NEMA standards.

3. Dimensions of service equipment enclosures shall meet the requirements of the service utility.

4. The dead front panels on Type III service equipment enclosures shall have a continuous stainless steel or aluminum piano hinge. The panel in front of the breakers shall be secured with a latch or captive screws. No live parts shall be mounted on the dead front panel.

5. The exterior door shall have provisions for padlocking. The padlock hole shall be a minimum diameter of 7/16".

6. Enclosures housing transformers of more than one kVA shall have effective screened ventilation louver of not less than 50 square inches. Screen shall be stainless steel No. 304, with a No. 10 size mesh. Framed screen shall be secured with at least four bolts.

7. Fasteners on the exterior of the enclosure shall be vandal-resistant and shall not be removable from the exterior. Exterior screws, nuts, bolts and washers shall be stainless steel.

8. Landing lugs for incoming service conductors shall be compatible with either copper or aluminum conductors sized to suit the conductors shown on the plan. Landing lugs shall be copper or tin-plated aluminum. Neutral bus shall be rated for 125 A and be suitable for copper or aluminum conductors unless otherwise specified. The terminal shall include but not be limited to:

   a) Incoming terminals (landing lugs)
   b) Neutral lugs
   c) Solid neutral terminal strip

9. At least 6 standard single pole circuit breaker spaces, 3/4" nominal, shall be provided for branch circuits. Circuit breaker interiors shall be copper. Interiors of enclosure shall accept plug-in or cable-in/cable-out circuit breakers.

10. Control wiring shall be 600 V, 14 stranded machine tool wire. Where subject to flexing, 19 strand wire shall be used.

11. Main bus shall be rated for 125 A and shall be tin-plated copper.

12. A plastic laminated wiring diagram shall be provided with brass mounting eyelets and attached to the inside of the enclosure and the wiring diagram shall be affixed to the interior with a UL or ETL approved method.

13. An engraved phenolic nameplate on the dead front panel indicating the function of each circuit or device shall be installed with stainless steel rivets or stainless steel screws:

    a) Adjacent to the breaker or device with character size a minimum of 1/8".

    b) At the top of the exterior door panel indicating State system number, voltage level and number of phases with character size a minimum of 3/16".

14. The plan shows the approximate location of devices within the enclosure. Components may be rearranged, however, the "working" clearances within the service equipment enclosure shall be maintained.

15. In unpaved areas a raised portland cement concrete pad 2'-0" x 4" x width of foundation shall be constructed in front of new service equipment enclosure installation. Pad shall be set to elevation of foundation.

16. Foundation shall extend 2" minimum beyond edge of service equipment enclosure.

17. Internal bus, where shown, is typical only. Alternative design of proposed service equipment enclosure shall be submitted to the Engineer for approval.

18. Plug-in circuit breakers may be mounted in the vertical or horizontal position. Cable-in/cable-out circuit breakers shall be mounted in the vertical position.

19. Type III-AF and Type III-BF service equipment enclosures shall have the meter viewing windows located on the front side of the service equipment enclosures.

20. Type III-AR and Type III-BR service equipment enclosures shall be similarly constructed as Type III-AF and Type III-BF respectively, except the meter viewing windows shall be located on the back side of the service equipment enclosures.

21. Minimum clearance shall be required for front and back of service equipment enclosure per National Electrical Code, Article 110.26, "Spaces About Electric Equipment (600 Volts, Nominal, or Less)."

STATE OF CALIFORNIA
DEPARTMENT OF TRANSPORTATION

ELECTRICAL SYSTEMS (SERVICE EQUIPMENT NOTES TYPE III SERIES)

NO SCALE

RSP ES-2C DATED OCTOBER 5, 2007 SUPERCEDES STANDARD PLAN ES-2C DATED MAY 1, 2006 - PAGE 405 OF THE STANDARD PLANS BOOK DATED MAY 2006.

REVISED STANDARD PLAN RSP ES-2C

DIST	COUNTY	ROUTE	POST MILES TOTAL PROJECT	SHEET NO.	TOTAL SHEETS
04	Ala	680	M3.6/R6.5	118	163

REGISTERED ELECTRICAL ENGINEER

October 5, 2007
PLANS APPROVAL DATE

REGISTERED PROFESSIONAL ENGINEER Jeffery G. McRae No. E14512 Exp. 6-30-08 ELECTRICAL STATE OF CALIFORNIA

The State of California or its officers or agents shall not be responsible for the accuracy or completeness of electronic copies of this plan sheet.

To accompany plans dated 6-18-12

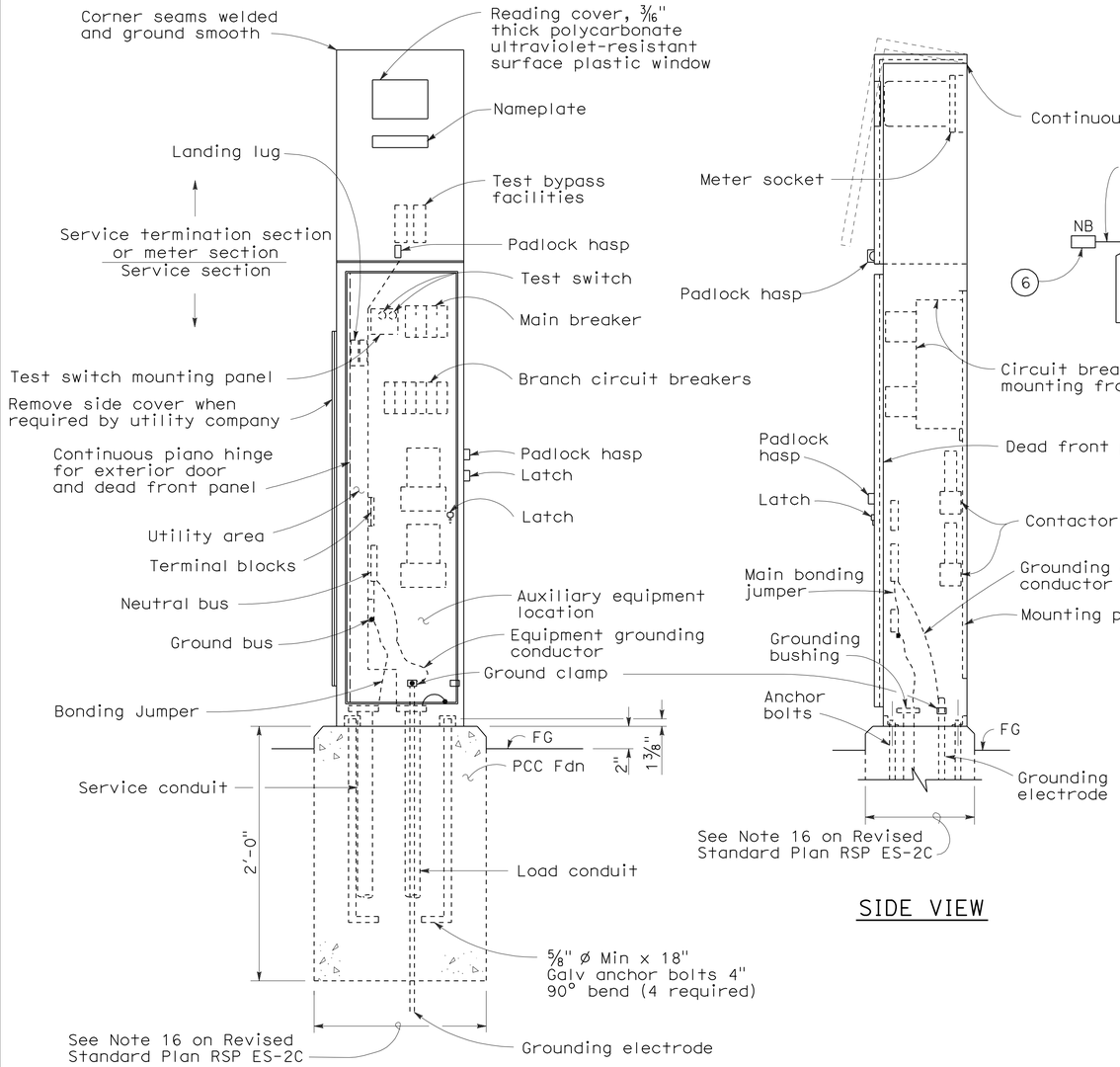

TYPE III-AF SERVICE EQUIPMENT ENCLOSURE (TYPICAL)

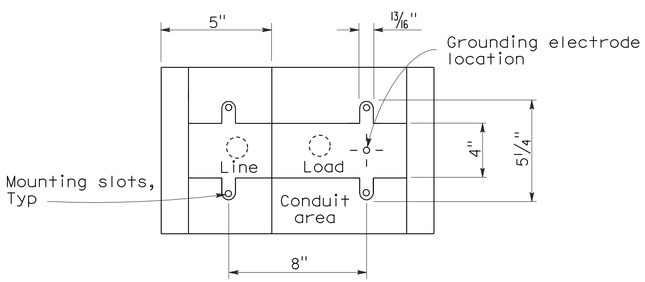

BASE FOR TYPE III-A SERVICE EQUIPMENT ENCLOSURE

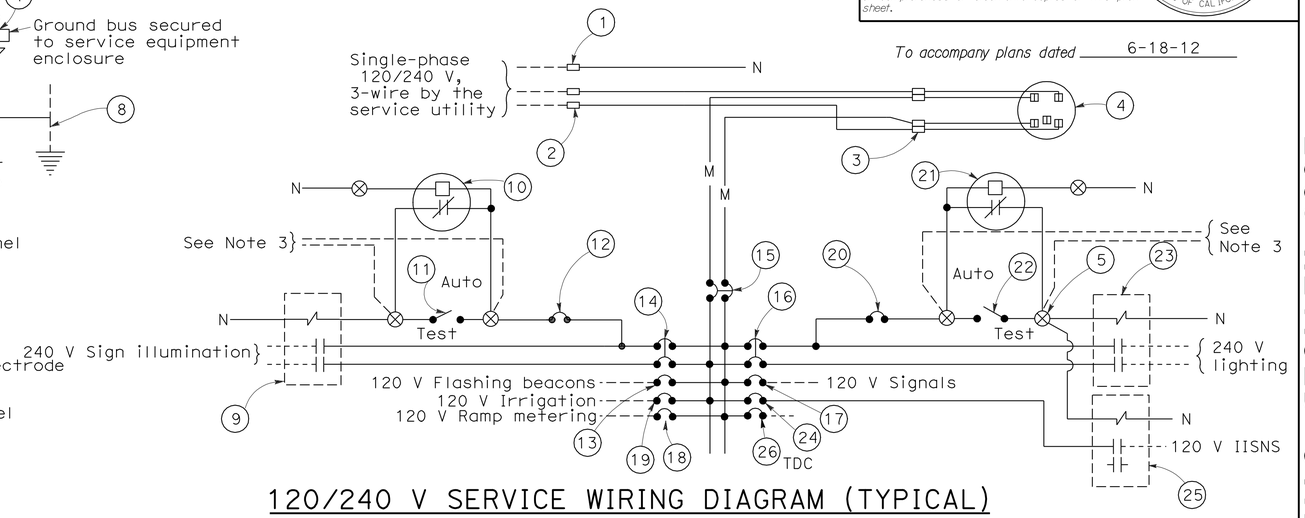

120/240 V SERVICE WIRING DIAGRAM (TYPICAL)

TYPE III-A SERVICE (120/240 V) EQUIPMENT LEGEND

ITEM No.	COMPONENT	NAME PLATE DESCRIPTION	ITEM No.	COMPONENT	NAME PLATE DESCRIPTION
1	Neutral lug		14	30 A, 240 V, 2P, CB	Sign Illumination
2	Landing lug (Note 6)		15	100 A, 240 V, 2P, CB	Main Breaker
3	Test bypass facility		16	30 A, 240 V, 2P, CB	Lighting
4	Meter socket and support		17	50 A, 120 V, 1P, CB	Signals
5	Terminal blocks		18	30 A, 120 V, 1P, CB	Ramp Metering
6	Neutral bus		19	20 A, 120 V, 1P, CB	Irrigation
7	Ground bus		20	15 A, 120 V, 1P, CB	Lighting Control
8	Grounding electrode		21	Photoelectric unit (Note 7)	
9	30 A, 2PNO Contactor	Sign Illumination	22	15 A, 1P, Test switch	Lighting Test Switch
10	Photoelectric unit (Note 7)		23	60 A, 2PNO Contactor	Lighting
11	15 A, 1P, Test switch	Sign Illumination Test Switch	24	15 A, 120 V, 1P, CB	IISNS
12	15 A, 120 V, 1P, CB	Sign Illumination Control	25	30 A, 2PNO Contactor	IISNS
13	15 A, 120 V, 1P, CB	Flashing Beacon	26	20 A, 120 V, 1P, CB	Telephone Demarcation Cabinet

NOTES: (FOR SERVICE EQUIPMENT ENCLOSURE)

1. Voltage ratings of service equipment shall conform to the service voltages indicated on the plans.
2. Unless otherwise indicated on the plans, service equipment items shall be provided for each service equipment enclosure as shown.
3. Connect to remote test switch mounted on lighting standards, sign post or structure when required.
4. Items No. 1 and 6 shall be isolated from the service equipment enclosure.
5. Meter sockets shall be 5 clip type.
6. The landing lug shall be suitable for multiple conductors.
7. Type V photoelectric control shall be used unless otherwise indicated on the plans.

STATE OF CALIFORNIA
DEPARTMENT OF TRANSPORTATION

ELECTRICAL SYSTEMS (SERVICE EQUIPMENT AND TYPICAL WIRING DIAGRAM, TYPE III-A SERIES)

NO SCALE

RSP ES-2D DATED OCTOBER 5, 2007 SUPERCEDES STANDARD PLAN ES-2D DATED MAY 1, 2006 - PAGE 406 OF THE STANDARD PLANS BOOK DATED MAY 2006.

REVISED STANDARD PLAN RSP ES-2D

2006 REVISED STANDARD PLAN RSP ES-2D

DIST	COUNTY	ROUTE	POST MILES TOTAL PROJECT	SHEET NO.	TOTAL SHEETS
04	Ala	680	M3.6/R6.5	119	163

REGISTERED ELECTRICAL ENGINEER

October 5, 2007
PLANS APPROVAL DATE

REGISTERED PROFESSIONAL ENGINEER
Jeffery G. McRae
No. E14512
Exp. 6-30-08
ELECTRICAL
STATE OF CALIFORNIA

The State of California or its officers or agents shall not be responsible for the accuracy or completeness of electronic copies of this plan sheet.

To accompany plans dated 6-18-12

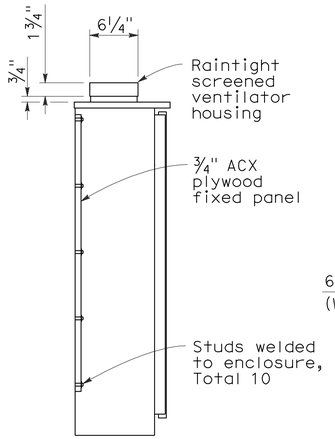

SECTION A-A

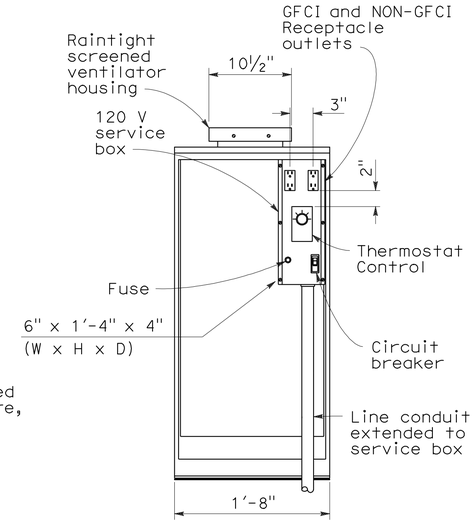

FRONT VIEW

(Exterior door removed for clarity)

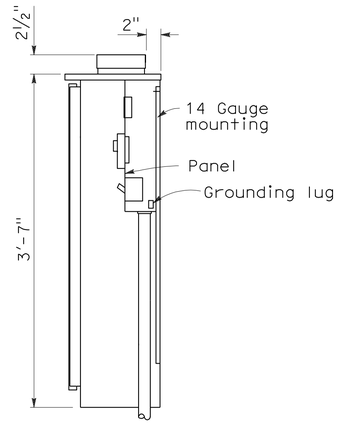

SECTION B-B

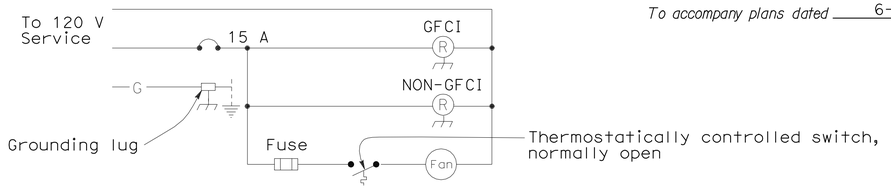

WIRING DIAGRAM

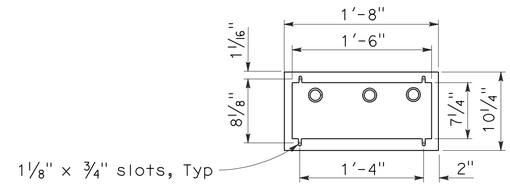

BASE PLAN

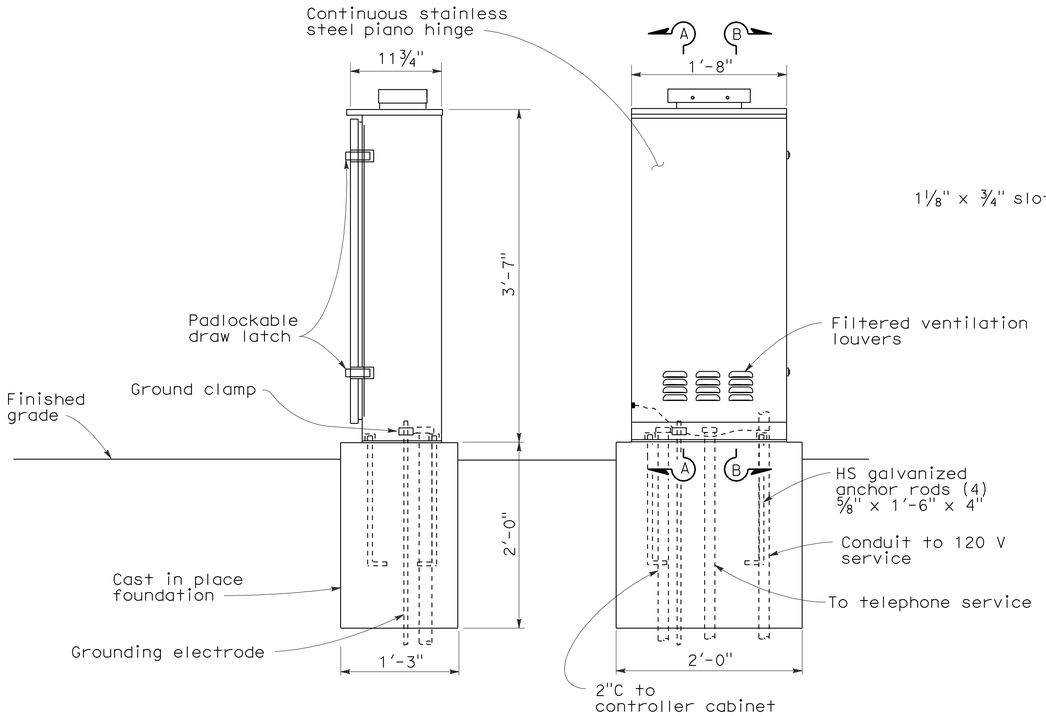

SIDE VIEW

FRONT VIEW

NOTES:

1. Telephone demarcation cabinet shall be furnished with a mounting panel, outlets, circuit breaker and deadfront plates in place. Dimensions are nominal.
2. An approved mastic or caulking compound shall be placed on the foundation prior to placing the cabinet to seal openings between the bottom of the cabinet and the foundation.
3. In unpaved areas, a raised PCC pad shall be placed in front of the telephone demarcation cabinet. Pad shall be 2'-0" x 1'-10" x 4" thick, with 2" above the finished grade.
4. All conduits shall be bonded to the enclosure.
5. Telephone demarcation cabinet:
   a) Material shall be anodized aluminum (⅛" thick).
   b) Fabrication shall conform to the requirements of the Standard Specifications.
   c) The exterior door shall be side hung and secured with a padlockable draw latch, the padlock hole shall be a minimum diameter of 7/16" to receive a padlock.
   d) Ventilation louvers shall be located on the door.
   e) Fan shall be mounted in a ventilator housing.
   f) Fan shall be thermostatically controlled and adjustable to turn on between 80°F and 130°F.
   g) Fan circuit shall be fused at 175 percent of the fan motor capacity.
   h) Fan capacity shall be at least 25 cubic feet per minute.
   i) Fasten fixed mounting panels with nuts, lock and flat washers to 3/16" Ø x 1" studs welded to enclosure.

STATE OF CALIFORNIA
DEPARTMENT OF TRANSPORTATION

ELECTRICAL SYSTEMS (TELEPHONE DEMARCATION CABINET, TYPE B)

NO SCALE

RSP ES-3E DATED OCTOBER 5, 2007 SUPERCEDES STANDARD PLAN ES-3E DATED MAY 1, 2006 - PAGE 414 OF THE STANDARD PLANS BOOK DATED MAY 2006.

REVISED STANDARD PLAN RSP ES-3E

2006 REVISED STANDARD PLAN RSP ES-3E

8-17-07

DIST	COUNTY	ROUTE	POST MILES TOTAL PROJECT	SHEET NO.	TOTAL SHEETS
04	Ala	680	M3.6/R6.5	120	163

REGISTERED ELECTRICAL ENGINEER

June 6, 2008
PLANS APPROVAL DATE

REGISTERED PROFESSIONAL ENGINEER
Jeffery G. McRae
No. E14512
Exp. 6-30-10
ELECTRICAL
STATE OF CALIFORNIA

The State of California or its officers or agents shall not be responsible for the accuracy or completeness of electronic copies of this plan sheet.

To accompany plans dated 6-18-12

VISORS

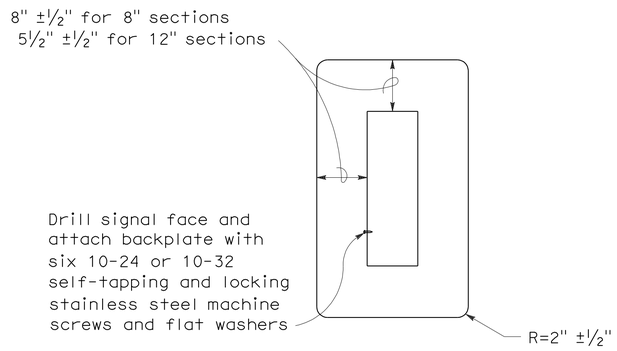

8" AND 12" SECTIONS

BACKPLATE

1/16" minimum thickness
3001-14 aluminum, or plastic when specified

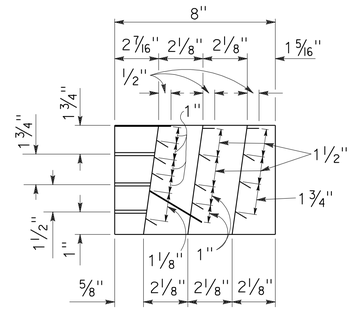

SECTION A-A

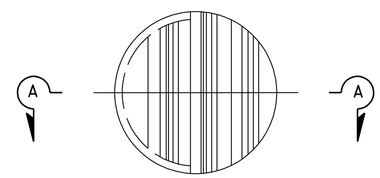

FRONT VIEW

DIRECTIONAL LOUVER

Directional louvers shall be oriented as directed by the Engineer and secured in place with one plated brass machine screw and nut.

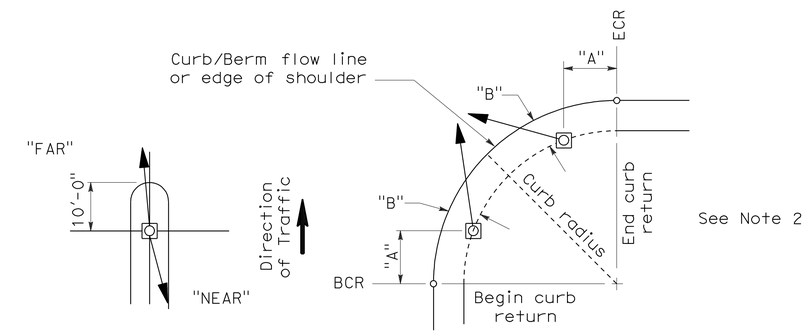

NOTES:

1. Typical signal pole placement unless dimensioned on plans.
2. For "A" and "B" dimensions, see Pole Schedule, or as directed by the Engineer.

SIGNAL STANDARD PLACEMENT DIMENSIONS AND EQUIPMENT LOCATIONS

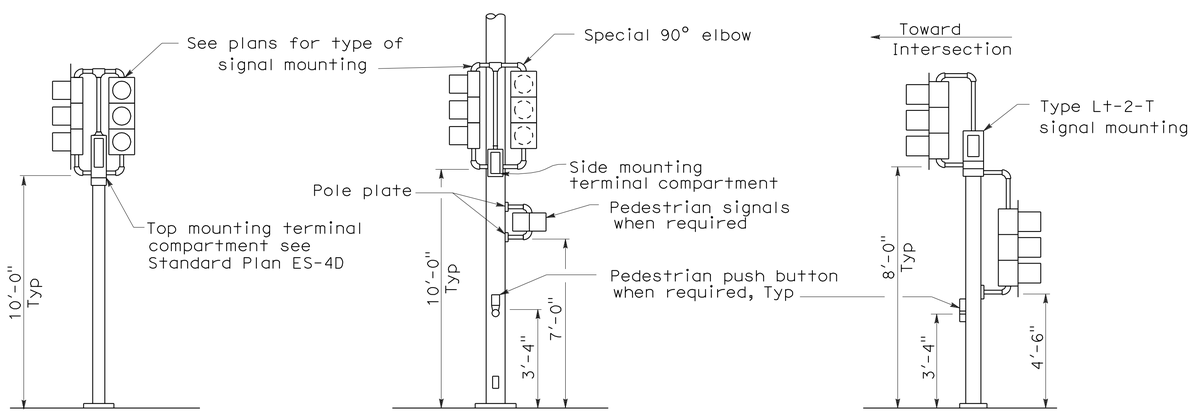

TOP MOUNTED SIGNALS (TV)

Type 1-A, 1-B, 1-C and 1-D standard as indicated on the plans

SIDE MOUNTED SIGNALS (SV AND SP)

Normally used on standards with luminaire or signal mast arm

LEFT TURN LANE SIGNAL

Type 1-A, 1-B, 1-C and 1-D standard as indicated on plans

TYPICAL SIGNAL INSTALLATIONS

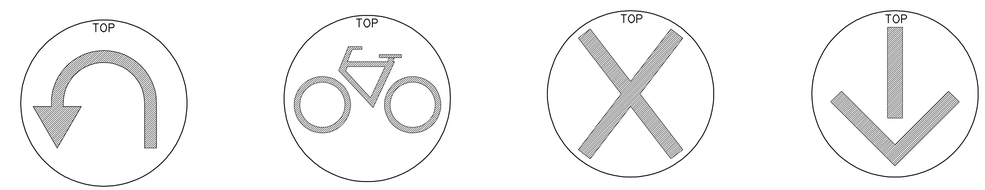

U-TURN SIGNAL FACE

BICYCLE SIGNAL FACE

LANE CONTROL SIGNAL FACE

LANE CONTROL SIGNAL FACE

STATE OF CALIFORNIA
DEPARTMENT OF TRANSPORTATION

ELECTRICAL SYSTEMS (SIGNAL HEADS AND MOUNTINGS)

NO SCALE

RSP ES-4C DATED JUNE 6, 2008 SUPERSEDES STANDARD PLAN ES-4C DATED MAY 1, 2006 - PAGE 420 OF THE STANDARD PLANS BOOK DATED MAY 2006.

REVISED STANDARD PLAN RSP ES-4C

2006 REVISED STANDARD PLAN RSP ES-4C

5-19-08

DIST	COUNTY	ROUTE	POST MILES TOTAL PROJECT	SHEET NO.	TOTAL SHEETS
04	Ala	680	M3.6/R6.5	121	163

REGISTERED ELECTRICAL ENGINEER

June 6, 2008
PLANS APPROVAL DATE

REGISTERED PROFESSIONAL ENGINEER Jeffery G. McRae No. E14512 Exp. 6-30-10 ELECTRICAL STATE OF CALIFORNIA

The State of California or its officers or agents shall not be responsible for the accuracy or completeness of electronic copies of this plan sheet.

To accompany plans dated 6-18-12

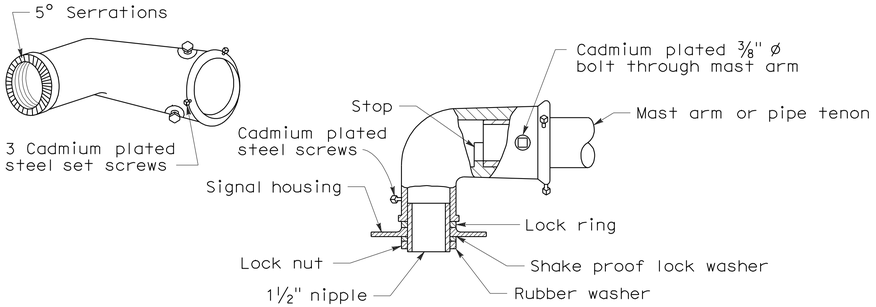

MAST ARM MOUNTING - TYPE "MAT"

For 2 NPS pipe, see Note 1.

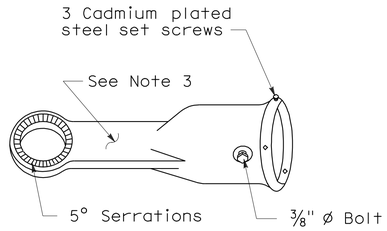

MAST ARM MOUNTING - TYPE "MAS"

For 2 NPS pipe. See Note 1.

SIGNAL SLIP FITTERS

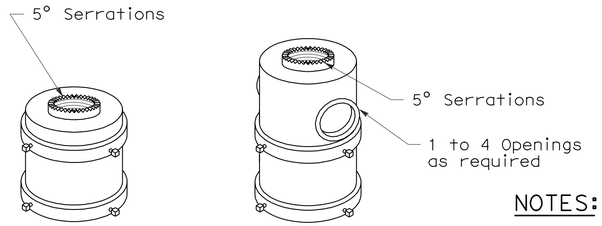

For one mounting For mulitiple mountings

TOP MOUNTINGS

For 4 NPS pipe, see Note 2.

NOTES:

1. After mast arm signal has been plumbed and secured, drill 7/16" hole through mast arm tenon in line with slip fitter hole. Place a cadmium plated 3/8" ø galvanized bolt with washer under bolt head through hole and secure with washer, nut, and locknut. Seal openings between mast arm mountings and mast arm with mastic.
2. (a) Threaded top mounted slip fitter openings shall be 1½ NPS.
   (b) Serrations in fittings shall match those on bottom of signal heads or in lock ring.
   (c) Top opening shall be offset when backplate is used.
3. Wireway shall have a cross section area of 0.95 square inch minimum. Minimum width of ½".

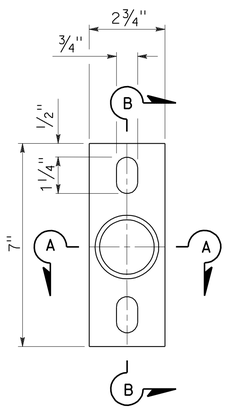

POLE PLATE

For side mountings

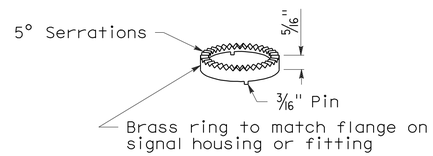

LOCK RING

Use where locking ring is not integral with signal housing or fitting.

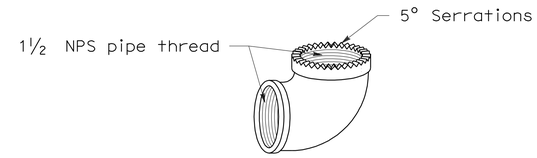

SPECIAL 90° ELBOW

One for each signal head, except those with special slip fitter mounting

MISCELLANEOUS MOUNTING HARDWARE

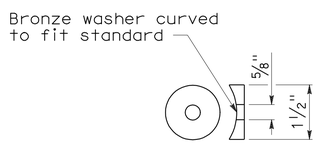

DETAIL "C"

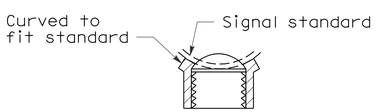

SECTION A-A

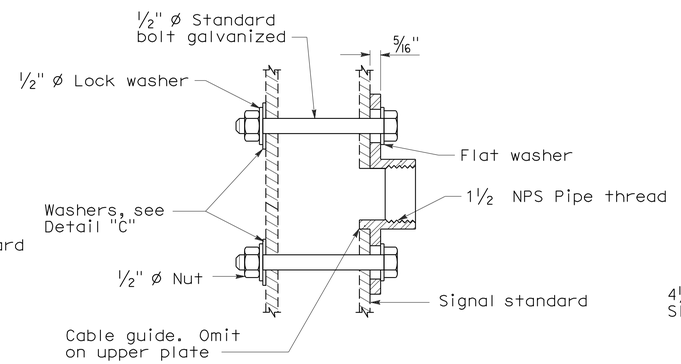

SECTION B-B

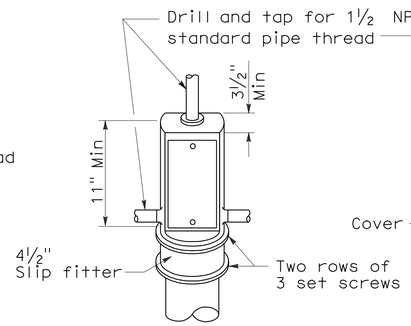

TOP MOUNTING

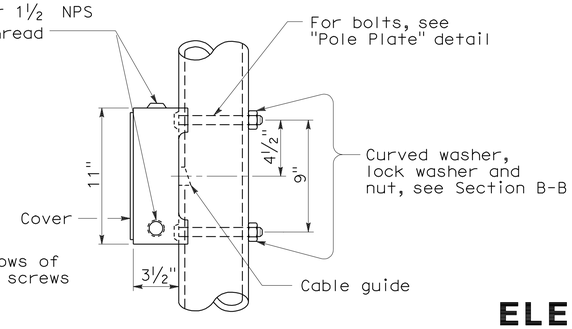

SIDE MOUNTING

TERMINAL COMPARTMENTS

STATE OF CALIFORNIA
DEPARTMENT OF TRANSPORTATION

ELECTRICAL SYSTEMS (SIGNAL HEADS AND MOUNTINGS)

NO SCALE

RSP ES-4D DATED June 6, 2008 SUPERSEDES STANDARD PLAN ES-4D
DATED MAY 1, 2006 - PAGE 421 OF THE STANDARD PLANS BOOK DATED MAY 2006.

REVISED STANDARD PLAN RSP ES-4D

2006 REVISED STANDARD PLAN RSP ES-4D

5-19-08

DIST	COUNTY	ROUTE	POST MILES TOTAL PROJECT	SHEET NO.	TOTAL SHEETS
04	Ala	680	M3.6/R6.5	122	163

REGISTERED ELECTRICAL ENGINEER

October 5, 2007
PLANS APPROVAL DATE

REGISTERED PROFESSIONAL ENGINEER Jeffery G. McRae No. E14512 Exp. 6-30-08 ELECTRICAL STATE OF CALIFORNIA

The State of California or its officers or agents shall not be responsible for the accuracy or completeness of electronic copies of this plan sheet.

To accompany plans dated 6-18-12

LOOP INSTALLATION PROCEDURE

1. Loops shall be centered in lanes.
2. Saw slots in pavement for loop conductors as shown in details.
3. Distance between side of loop and a lead-in saw cut from adjacent detectors shall be 2'-0" minimum. Distance between lead-in saw cuts shall be 6" minimum.
4. Bottom of saw slot shall be smooth with no sharp edges.
5. Slots shall be washed until clean, blown out and thoroughly dried before installing loop conductors.
6. Adjacent loops on the same sensor unit channel shall be wound in opposite directions.
7. Identify and tag loop circuit pairs in the pull box with loop number, start (S) and finish (F) of conductor. Identify and tag lead-in-cable with sensor number and phase.
8. Install loop conductor in slot using a 3/16" to 1/4" thick wood paddle. Hold loop conductors with wood paddles (at the bottom of the sawed slot) during sealant placement.
9. No more than 2 twisted pairs shall be installed in one sawed slot.
10. Allow additional 5'-0" of slack length of conductor for the lead-in run to pull box.
11. The additional length of each conductor for each loop shall be twisted together into a pair (6 turns per 3'-4" minimum) before being placed in the slot and conduit leading to pull box.
12. Test each loop circuit for continuity, circuit resistance and insulation resistance at the pull box before filling slots.
13. Fill slots as shown in details.
14. Splice loop conductors to lead-in-cable. Splices shall be soldered.
15. End of lead-in-cable and Type 2 loop conductor shall be waterproofed prior to installing in conduit to prevent moisture from entering the cable.
16. Lead-in-cable shall not be spliced between the pull box and the controller cabinet terminals.
17. Test each loop circuit for continuity, circuit resistance and insulation resistance at the controller cabinet location.
18. Where loop conductors are not to be spliced to a lead-in-cable, the ends of the conductors shall be taped and waterproofed with electrical insulating coating.

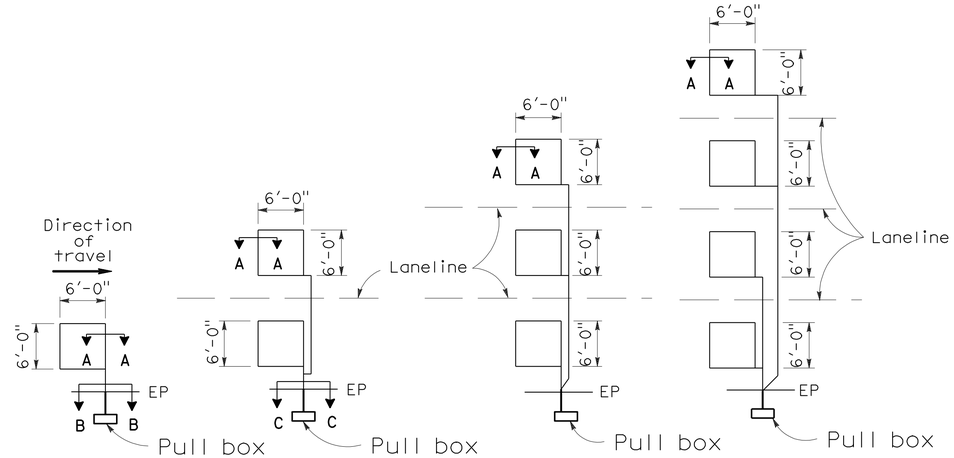

TYPE 1A INSTALLATION | TYPE 2A INSTALLATION | TYPE 3A INSTALLATION | TYPE 4A INSTALLATION

SAWCUT DETAILS

(Type A loop detector configurations illustrated)

1. 1A thru 4A = 1 Type A loop configuration in each lane.
2. 1B thru 4B = 1 Type B loop configuration in each lane.
3. 1C = 1 Type C loop configuration entering lanes as required.
4. 1D thru 4D = 1 Type D loop configuration in each lane.
5. 1E thru 4E = 1 Type E loop configuration in each lane.
6. 1Q thru 4Q = 1 Type Q loop configuration in each lane. (Use Type A, B, C, D, E or Q loop detector configurations only when specified or shown on plans)

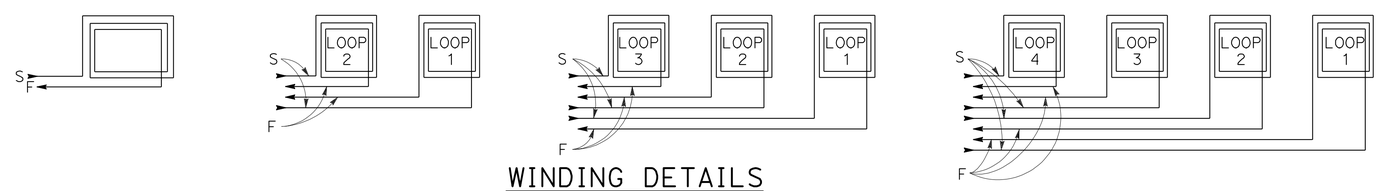

WINDING DETAILS

See Notes 6 and 7

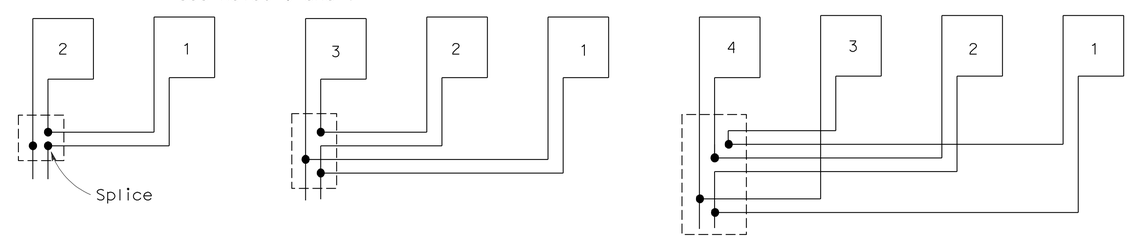

TYPICAL LOOP CONNECTIONS

(Dashed lines represent the pull box)

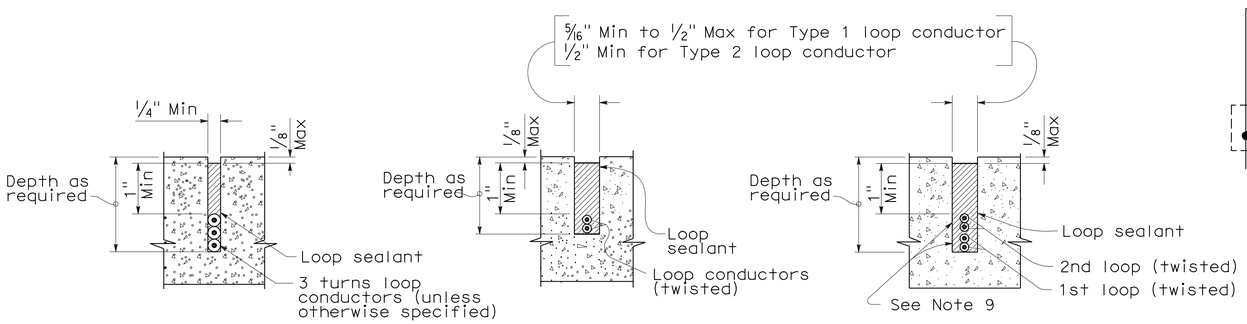

SECTION A-A | SECTION B-B | SECTION C-C

SLOT DETAILS - TYPE 1 AND TYPE 2 LOOP CONDUCTOR

STATE OF CALIFORNIA
DEPARTMENT OF TRANSPORTATION

ELECTRICAL SYSTEMS (DETECTORS)

NO SCALE

RSP ES-5A DATED OCTOBER 5, 2007 SUPERCEDES STANDARD PLAN ES-5A DATED MAY 1, 2006 - PAGE 423 OF THE STANDARD PLANS BOOK DATED MAY 2006.

REVISED STANDARD PLAN RSP ES-5A

2006 REVISED STANDARD PLAN RSP ES-5A

DIST	COUNTY	ROUTE	POST MILES TOTAL PROJECT	SHEET NO.	TOTAL SHEETS
04	Ala	680	M3.6/R6.5	123	163

REGISTERED CIVIL ENGINEER

January 18, 2008
PLANS APPROVAL DATE

REGISTERED PROFESSIONAL ENGINEER
Stanley P. Johnson
No. C57793
Exp. 03-31-08
CIVIL
STATE OF CALIFORNIA

The State of California or its officers or agents shall not be responsible for the accuracy or completeness of electronic copies of this plan sheet.

To accompany plans dated 6-18-12

LUMINAIRE ARM DATA

PROJECTED LENGTH	THICKNESS	MINIMUM OD @ POLE	MOUNTING HEIGHT
* 6'-0"	0.1196"	3¼"	36'-9"±
8'-0"		3½"	37'-3"±
10'-0"		3¾"	38'-0"±
12'-0"		3¾"	39'-0"±
15'-0"		4¼"	39'-6"±
** 20'-0"	0.1793"	5"	37'-0"±

* Type 30 - arm length 6'-0" - 15'-0" maximum
** Type 31 - arm lengths 20'-0"

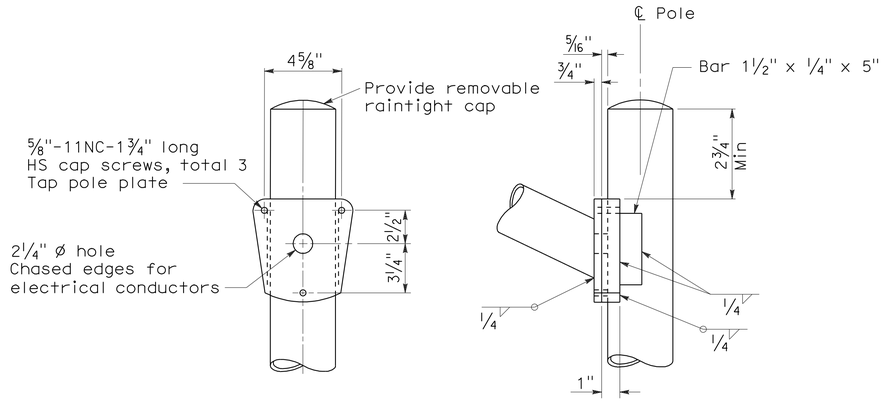

DETAIL A - TYPE 30

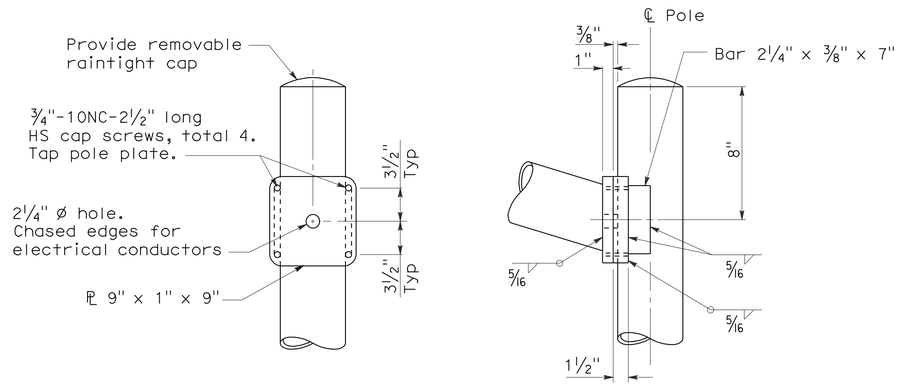

DETAIL A - TYPE 31

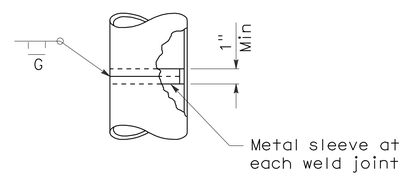

POLE SPLICE

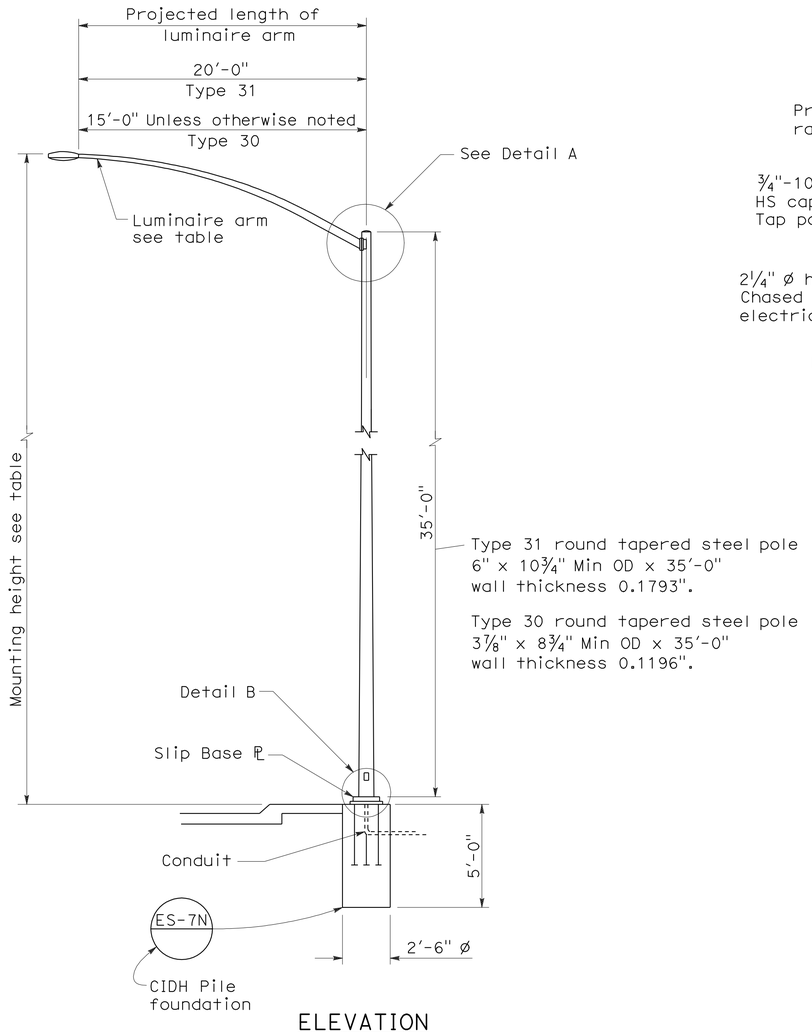

ELEVATION

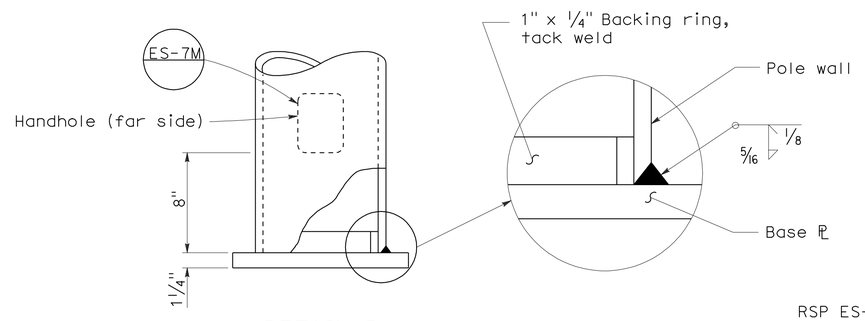

DETAIL B

NOTES:

1. Sheet steel shall have a minimum yield of 48,000 psi.
2. For slip base details see Standard Plan ES-6F.
3. For Type 30 fixed base use Type 15 base plate, and foundation shown on Revised Standard Plan RSP ES-6A. Use 1¼" Dia x 3'-6" x 4" anchor bolts.
4. For Type 31 fixed base use Type 32 base plate, anchor bolts and foundation on Standard Plan ES-6G.
5. Handhole shall be located on downstream side of traffic unless noted otherwise on plans.
6. For additional general notes refer to Standard Plan ES-7M.

STATE OF CALIFORNIA
DEPARTMENT OF TRANSPORTATION

ELECTRICAL SYSTEMS (LIGHTING STANDARD TYPES 30 AND 31)

NO SCALE

RSP ES-6E DATED JANUARY 18, 2008 SUPERCEDES STANDARD PLAN ES-6E DATED MAY 1, 2006 - PAGE 430 OF THE STANDARD PLANS BOOK DATED MAY 2006.

REVISED STANDARD PLAN RSP ES-6E

2006 REVISED STANDARD PLAN RSP ES-6E

11-19-07

DIST	COUNTY	ROUTE	POST MILES TOTAL PROJECT	SHEET NO.	TOTAL SHEETS
04	Ala	680	M3.6/R6.5	124	163

REGISTERED CIVIL ENGINEER

October 5, 2007
PLANS APPROVAL DATE

REGISTERED PROFESSIONAL ENGINEER
Stanley P. Johnson
No. C57793
Exp. 3-31-08
CIVIL
STATE OF CALIFORNIA

The State of California or its officers or agents shall not be responsible for the accuracy or completeness of electronic copies of this plan sheet.

To accompany plans dated 6-18-12

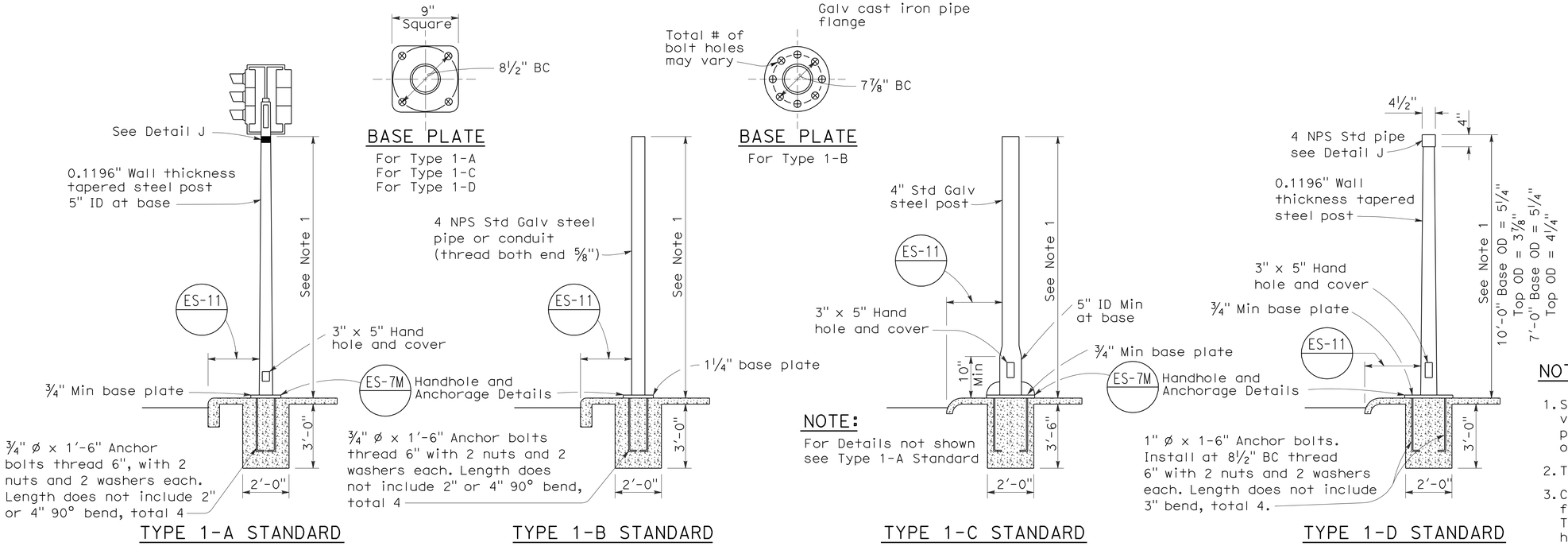

TYPE 1 SIGNAL STANDARDS

NOTES:

1. Standards shall be 10'-0" ± 2" for vehicle signals and 7'-0" ± 2" for pedestrian signals unless otherwise noted on plans.
2. Top of standards shall be 4½" OD.
3. Conduits shall extend 2" maximum above finished surface of foundation and for Types 1-A, 1-C and 1-D shall be sloped toward handhole.
4. Anchor bolts shall be bonded to conduit or grounding conductor.
5. Conduit between standard and adjacent pull box shall be 2" minimum.
6. Paint numbers on roadway side facing traffic when electrolier or post is left of direction of traffic.

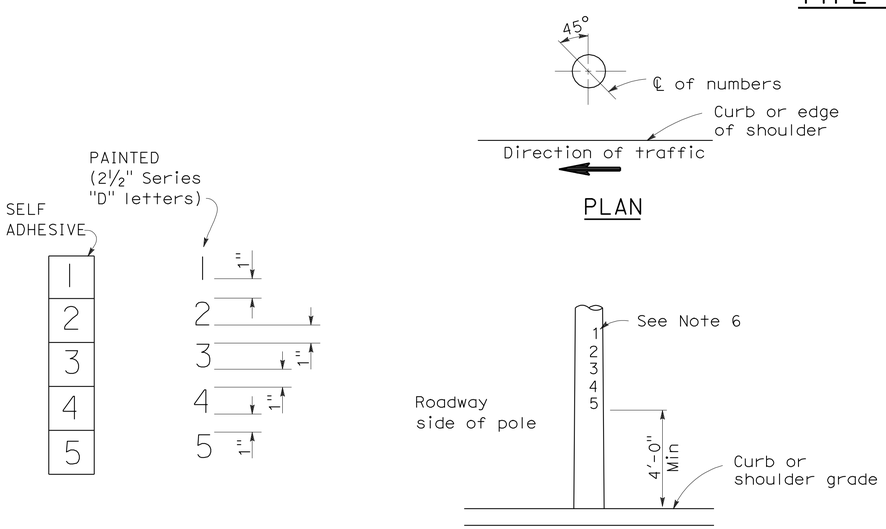

LOCATION OF EQUIPMENT NUMBERS ON STANDARDS AND POSTS

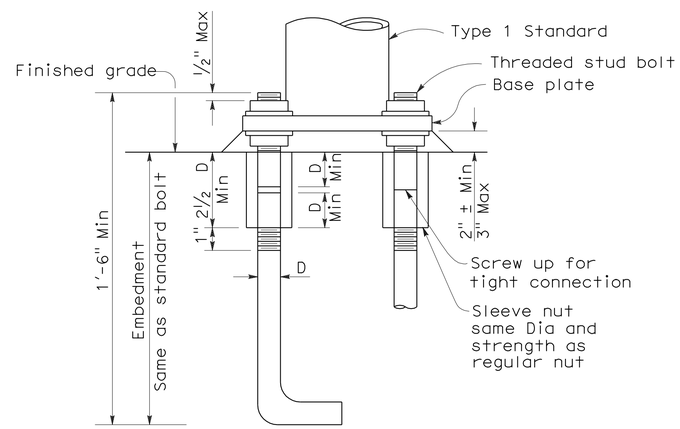

ANCHOR BOLTS WITH SLEEVE NUTS

Sleeve nuts to be used only when shown or specified on Project Plans

D = Diameter of anchor bolt

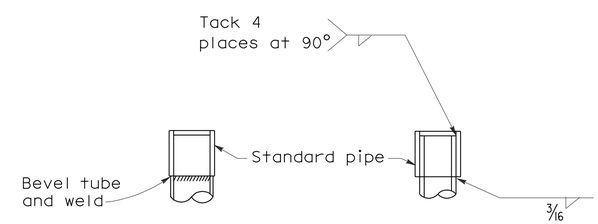

DETAIL J

Tube may be inserted into pipe or butted as required

STATE OF CALIFORNIA
DEPARTMENT OF TRANSPORTATION

ELECTRICAL SYSTEMS (SIGNAL AND LIGHTING STANDARD TYPE 1 STANDARD AND EQUIPMENT NUMBERING)

NO SCALE

RSP ES-7B DATED OCTOBER 5, 2007 SUPERCEDES STANDARD PLAN ES-7B DATED MAY 1, 2006 - PAGE 438 OF THE STANDARD PLANS BOOK DATED MAY 2006.

REVISED STANDARD PLAN RSP ES-7B

2006 REVISED STANDARD PLAN RSP ES-7B

7-10-07

DIST	COUNTY	ROUTE	POST MILES TOTAL PROJECT	SHEET NO.	TOTAL SHEETS
04	Ala	680	M3.6/R6.5	125	163

REGISTERED ELECTRICAL ENGINEER

January 20, 2012
PLANS APPROVAL DATE

REGISTERED PROFESSIONAL ENGINEER Jeffery G. McRae No. E14512 Exp. 6-30-12 ELECTRICAL STATE OF CALIFORNIA

The State of California or its officers or agents shall not be responsible for the accuracy or completeness of electronic copies of this plan sheet.

To accompany plans dated 6-18-12

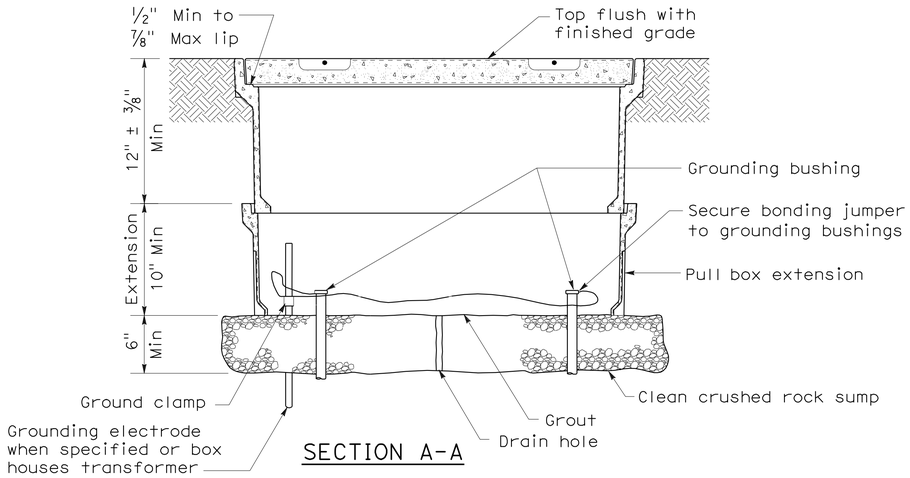

SECTION A-A

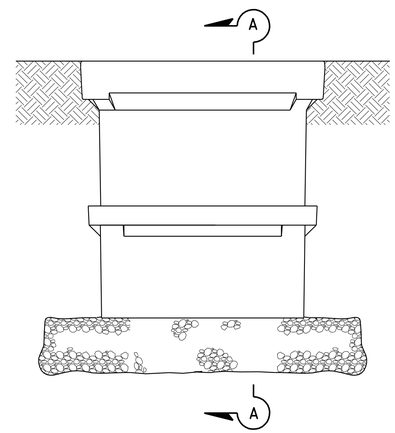

SIDE VIEW

INSTALLATION DETAILS

DETAIL A

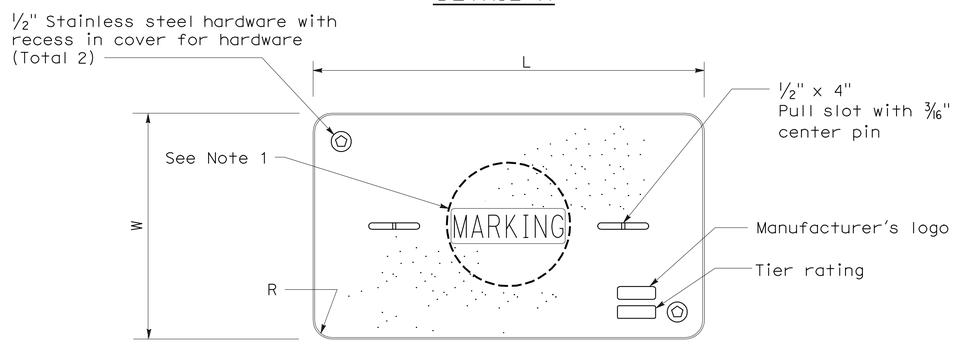

COVER TOP VIEW

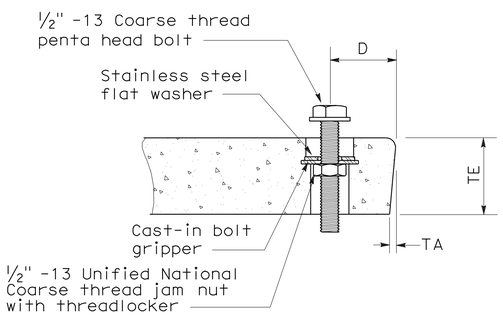

TYPICAL COVER CAPTIVE BOLT

(Or similar)

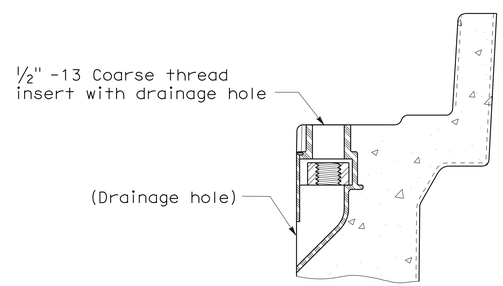

TYPICAL THREADED INSERT

(Or similar)

DIMENSION TABLE										
PULL BOX	PULL BOX			COVER						
	Minimum Depth Box	Minimum Depth Extension	Maximum Weight	L	W	R	TE	TA	D	Maximum Weight
No. 3 1/2	12"	N/A	40 lb	1' - 3 3/8"	10 1/8"	1 3/8"	2"	1/8"	1 3/4"	30 lb
No. 5	12"	10"	55 lb	1' - 11 1/4"	1' - 1 3/4"	1 3/8"	2"	1/8"	1 3/4"	60 lb
No. 6	12"	10"	70 lb	2' - 6 1/2"	1' - 5 1/2"	1 3/8"	2"	1/8"	2"	85 lb

NOTES ON PULL BOXES:

1. Pull box covers must be marked as follows: "SERVICE" Service circuits between service point and service disconnect; "SPRINKLER-CONTROL" sprinkler control circuits, 50 V or less; "CALTRANS" on all pull boxes, except pull boxes marked "SPRINKLER-CONTROL"; and "TELEPHONE" Telephone service;

   A) No. 3 1/2 pull box.
      1) "SIGNAL" - Traffic signal circuits with or without street or sign lighting circuits.
      2) "ST LIGHTING" - Street or sign lighting circuits where voltage is under 600 V.

   B) No. 5, 6, 9 or 9A pull box.
      1) "TRAFFIC SIGNAL" - Traffic signal circuits with or without street or sign lighting circuits.
      2) "STREET LIGHTING" - Street or sign lighting circuits where voltage is under 600 V.
      3) "STREET LIGHTING-HIGH VOLTAGE" - Street or sign lighting circuits where voltage is above 600 V.
      4) "IRRIGATION" - Circuits to irrigation controller 120 V or more.
      5) "RAMP METER" - Ramp meter circuits.
      6) "COUNT STATION" - Count or speed monitor circuits.
      7) "COMMUNICATIONS" - Communication circuits.
      8) "TOS COMMUNICATIONS" - TOS communication line.
      9) "TOS POWER" -TOS power.
      10) "TDC POWER" - Telephone demarcation cabinet power.
      11) "CCTV" - Closed circuit television circuits.
      12) "TMS" - Traffic monitoring station circuits.
      13) "CMS" - Changeable message sign circuits.
      14) "HAR" - Highway advisory radio circuits.

2. The nominal dimensions of the opening in which the cover sets must be the same as the cover dimensions (L and W) plus 1/8" or greater.

3. Covers and boxes must be interchangeable with California Standard. When interchanged with a standard, the top surfaces must be flush within 1/8". Top outside radius of covers and pull boxes must have a 1/8" radius.

4. Pull box extension may be another pull box as long as the bottom edge of the pull box can fit into the cover opening.

STATE OF CALIFORNIA
DEPARTMENT OF TRANSPORTATION

ELECTRICAL SYSTEMS (PULL BOX)

NO SCALE

NSP ES-8A DATED JANUARY 20, 2012 SUPPLEMENTS THE STANDARD PLANS BOOK DATED MAY 2006.

NEW STANDARD PLAN NSP ES-8A

2006 NEW STANDARD PLAN NSP ES-8A

9-28-11

DIST	COUNTY	ROUTE	POST MILES TOTAL PROJECT	SHEET NO.	TOTAL SHEETS
04	Ala	680	M3.6/R6.5	126	163

REGISTERED ELECTRICAL ENGINEER

January 20, 2012
PLANS APPROVAL DATE

REGISTERED PROFESSIONAL ENGINEER
Jeffery G. McRae
No. E14512
Exp. 6-30-12
ELECTRICAL
STATE OF CALIFORNIA

The State of California or its officers or agents shall not be responsible for the accuracy or completeness of electronic copies of this plan sheet.

To accompany plans dated 6-18-12

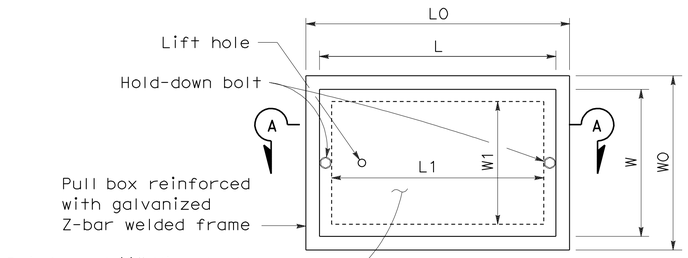

TOP VIEW

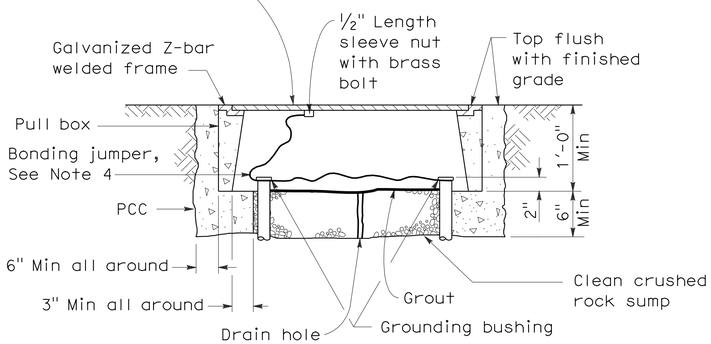

SECTION A-A

No. 3½(T), No. 5(T) AND No. 6(T) TRAFFIC PULL BOX

NOTES ON PULL BOXES:

1. Traffic pull box shall be provided with steel cover and special concrete footing. Steel cover shall have embossed non-skid pattern.
2. Steel reinforcing shall be as regularly used in the standard products of the respective manufacturer.
3. Pull box covers must be marked as follows: "SERVICE" Service circuits between service point and service disconnect; "SPRINKLER-CONTROL" Sprinkler control circuits, 50 V or less; "CALTRANS" On all pull boxes, except pull boxes marked "SPRINKLER-CONTROL"; and "TELEPHONE" Telephone service.
   A) No. 3½(T) pull box.
      1) "SIGNAL" - Traffic signal circuits with or without street or sign lighting circuits.
      2) "ST LIGHTING" - Street or sign lighting circuits where voltage is under 600 V.
   B) No. 5(T) or 6(T) pull box.
      1) "TRAFFIC SIGNAL" - Traffic signal circuits with or without street or sign lighting circuits.
      2) "STREET LIGHTING" - Street or sign lighting circuits where voltage is under 600 V.
      3) "STREET LIGHTING-HIGH VOLTAGE" - Street or sign lighting circuits where voltage is above 600 V.
      4) "IRRIGATION" - Circuits to irrigation controller 120 V or more.
      5) "RAMP METER" - Ramp meter circuits.
      6) "COUNT STATION" - Count or speed monitor circuits.
      7) "COMMUNICATION" - Communication circuits.
      8) "TOS COMMUNICATIONS" - TOS communications line.
      9) "TOS POWER" - TOS power.
      10) "TDC POWER" - Telephone demarcation cabinet power.
      11) "CCTV" - Closed circuit television circuits.
      12) "TMS" - Traffic monitoring station circuits.
      13) "CMS" - Changeable message sign circuits.
      14) "HAR" - Highway advisory radio circuits.
4. Bonding jumper for metal covers shall be 3' long, minimum.
5. The nominal dimensions of the opening in which the cover sets must be the same as the cover dimensions except the length and width dimensions shall be ⅛" greater.
6. Covers and boxes must be interchangeable with California standard male and female gages. When interchanged with a standard male or female gage, the top surfaces must be flush within ⅛".

DIMENSION TABLE

PULL BOX	BOX						COVER				
	Minimum * Thickness	Minimum Depth Box and Extension	WO	LO	L1	W1	L **	W **	R	Edge Thickness	Edge Taper
No. 3½(T)	1½"	1'-0"	1'-5"± 1"	1'-8⅞"±	1'-2½"±	10⅝"± 1"	1'-8"±	1'-1¾"±	0"	½"	None
No. 5(T)	1¾"	1'-0"	1'-11½"± 1"	2'-5½"±	1'-7"±	1'-1"± 1"	2'-3"±	1'-4"±	0"	½"	None
No. 6(T)	2"	1'-0"	2'-6"± 1"	2'-11½"±	1'-11½"±	1'-5"± 1"	2'-9"±	1'-8"±	0"	½"	None

* Excluding conduit web ** Top dimension

STATE OF CALIFORNIA
DEPARTMENT OF TRANSPORTATION

ELECTRICAL SYSTEMS (TRAFFIC RATED PULL BOX)

NO SCALE

NSP ES-8B DATED JANUARY 20, 2012 SUPPLEMENTS THE STANDARD PLANS BOOK DATED MAY 2006.

NEW STANDARD PLAN NSP ES-8B

2006 NEW STANDARD PLAN NSP ES-8B

9-28-11

DIST	COUNTY	ROUTE	POST MILES TOTAL PROJECT	SHEET NO.	TOTAL SHEETS
04	Ala	680	M3.6/R6.5	127	163

REGISTERED ELECTRICAL ENGINEER

October 5, 2007
PLANS APPROVAL DATE

Jeffery G. McRae
REGISTERED PROFESSIONAL ENGINEER
No. E14512
Exp. 6-30-08
ELECTRICAL
STATE OF CALIFORNIA

The State of California or its officers or agents shall not be responsible for the accuracy or completeness of electronic copies of this plan sheet.

To accompany plans dated 6-18-12

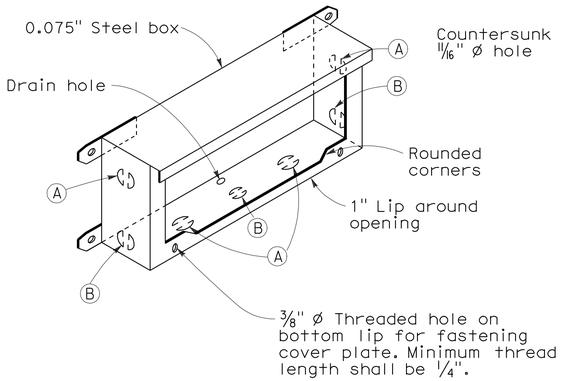

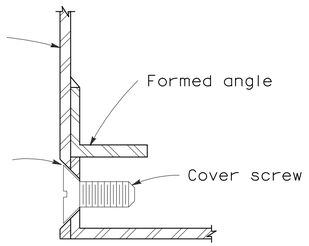

DETAIL J

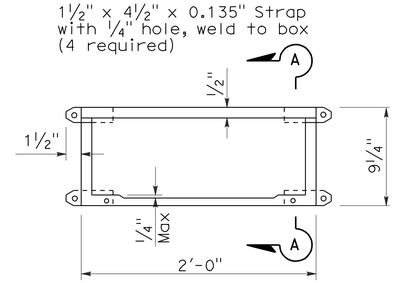

PLAN

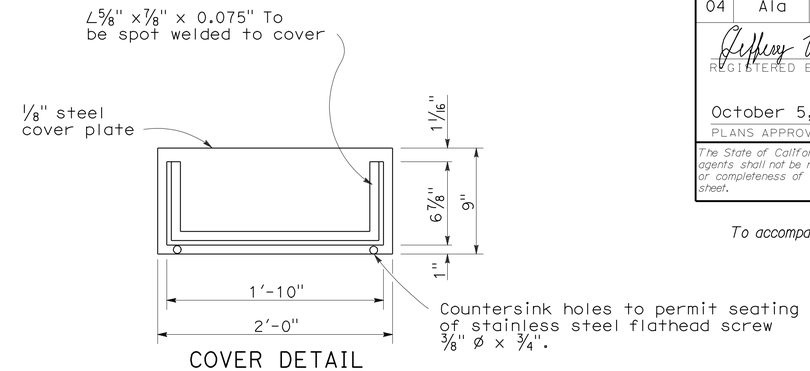

COVER DETAIL

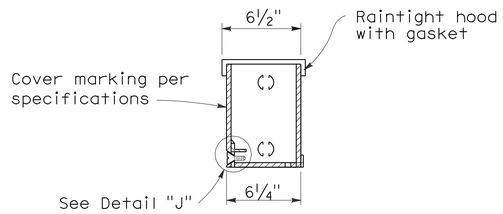

SECTION A-A

INSTALLATION NOTE:

Box shall be parallel to top of railing. Close cover box during pouring with 1/4" plywood of sufficient size to provide 1:1 chamfer on 3 sides of cover. Upper edge of plywood shall fit against lower edge of raintight hood.

No. 9 STRUCTURE PULL BOX

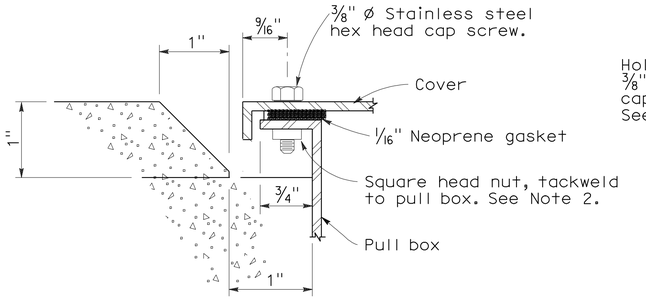

SECTION C-C

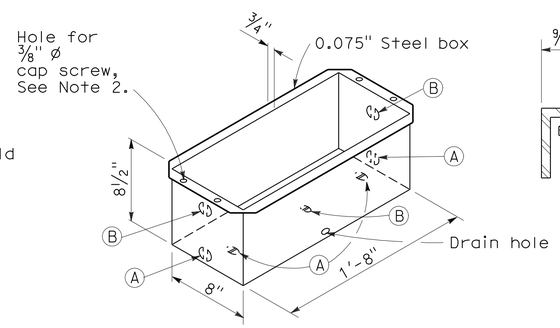

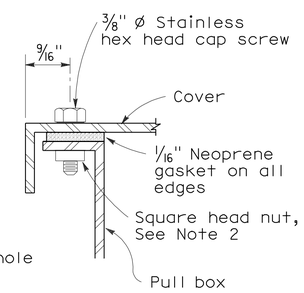

DETAIL A

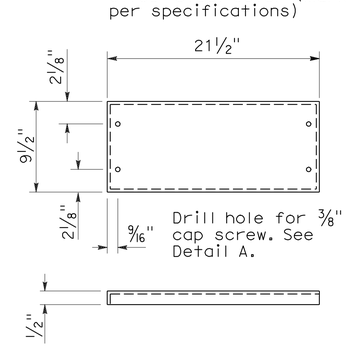

COVER DETAIL

NOTES: No. 9 and 9A Pull Box

1. Corner joints shall be lapped and secured by spot welding or riveting.
2. Where cap screws are used to attach cover to box, either of the following methods of providing adequate threading may be used:
   a. Tack weld square nut to bottom of flange (Total 4), or
   b. Tack weld a 1/4" x 5/8" x 8" bar beneath flange (Total 2).
3. Pound knockouts flat after punching.
4. Multiple size knockouts shall not be permitted.
5. Pull box covers shall be marked as shown on Standard Plan ES-8.

No. 9A STRUCTURE PULL BOX

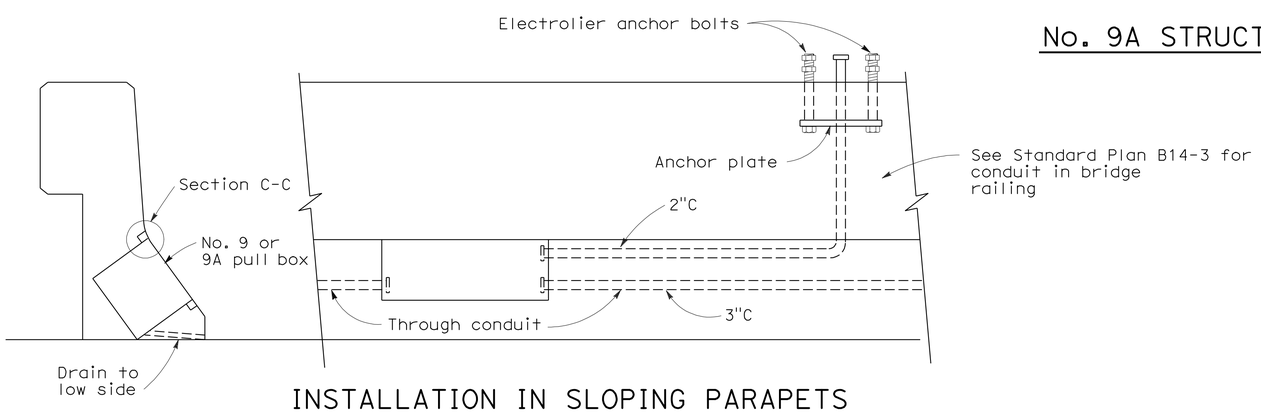

INSTALLATION IN SLOPING PARAPETS

For reinforcement in area of electrolier, see railing sheets. For electrolier anchor bolts, see Standard Plan ES-6B.

KNOCKOUT SCHEDULE
No. 9 AND 9A PULL BOX

(A) 2"C, 1 each end, 2 on bottom.

(B) 3"C, 1 each end, 1 on bottom.

STATE OF CALIFORNIA
DEPARTMENT OF TRANSPORTATION

ELECTRICAL SYSTEMS (ELECTRICAL DETAILS STRUCTURE INSTALLATIONS)

NO SCALE

RSP ES-9C DATED OCTOBER 5, 2007 SUPERCEDES STANDARD PLAN ES-9C DATED MAY 1, 2006 - PAGE 456 OF THE STANDARD PLANS BOOK DATED MAY 2006.

REVISED STANDARD PLAN RSP ES-9C

2006 REVISED STANDARD PLAN RSP ES-9C

7-26-07

DIST	COUNTY	ROUTE	POST MILES TOTAL PROJECT	SHEET NO.	TOTAL SHEETS
04	Ala	680	M3.6/R6.5	128	163

REGISTERED ELECTRICAL ENGINEER

October 5, 2007
PLANS APPROVAL DATE

REGISTERED PROFESSIONAL ENGINEER
Jeffery G. McRae
No. E14512
Exp. 6-30-08
ELECTRICAL
STATE OF CALIFORNIA

The State of California or its officers or agents shall not be responsible for the accuracy or completeness of electronic copies of this plan sheet.

To accompany plans dated 6-18-12

NOTES: (FOR LIGHTING AND SIGN ILLUMINATION CONTROL)

1. The ballast voltages of lighting fixtures and luminaires shall match line service voltages.
2. Voltage rating of photoelectric controls shall conform to the service voltage indicated on the plans.
3. Terminal strip shall be provided for wiring to fixtures.
4. Type SC1A, SC2A, SC3A controls are similar to Types SC1, SC2 and SC3 controls respectively except test switch and wiring are not required.

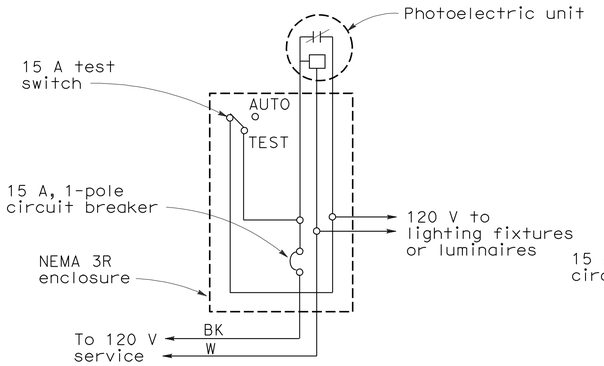

TYPE LC1 CONTROL

For 120 V unswitched circuit with no more than 800 W load.

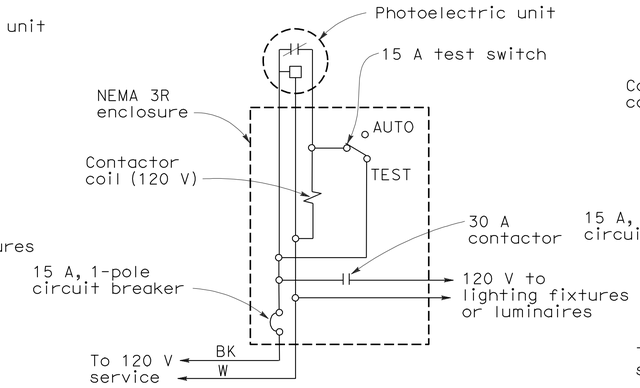

TYPE LC2 CONTROL

For 120 V unswitched circuit

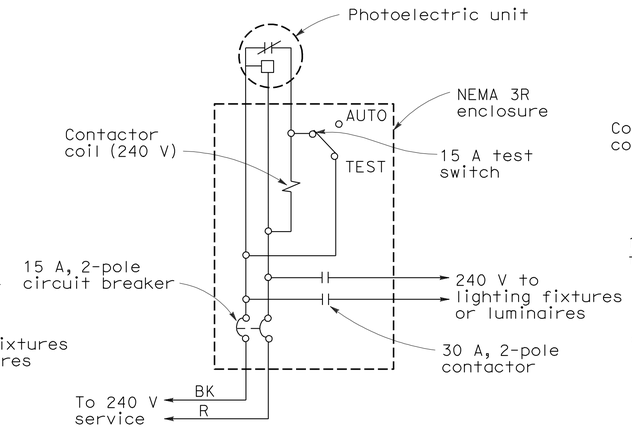

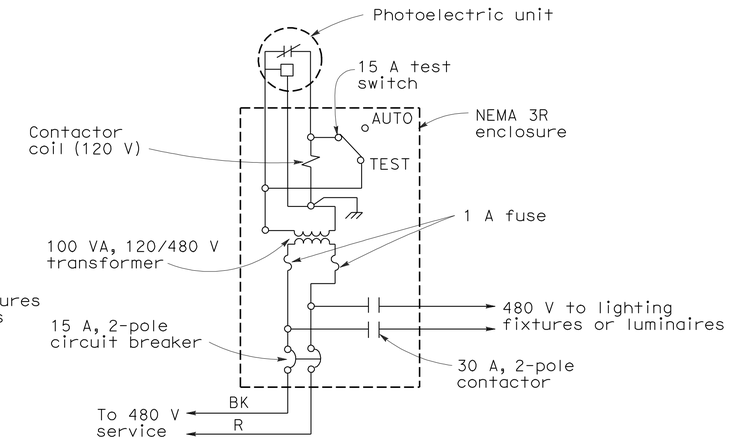

TYPE LC3 CONTROL

For 240 V and 480 V unswitched circuits

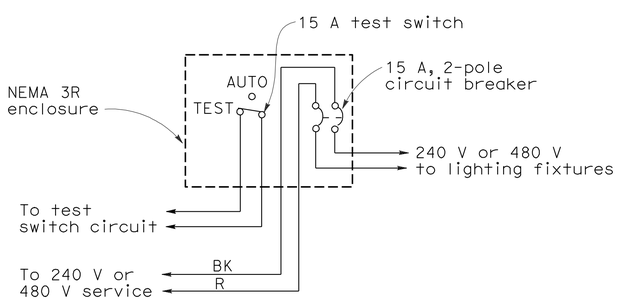

TYPE SC1 CONTROL

For 240 V or 480 V switched circuit, see Note 4 for Type SC1A

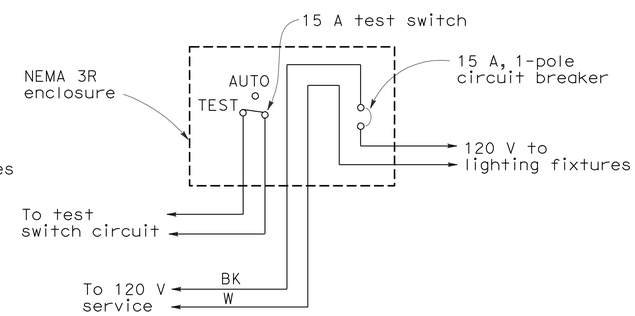

TYPE SC2 CONTROL

For 120 V switched circuit, see Note 4 for Type SC2A

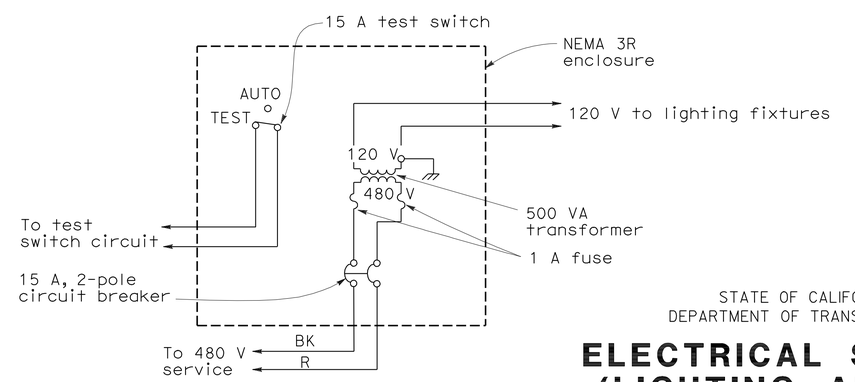

TYPE SC3 CONTROL

For 480 V switched sign circuit, see Note 4 for Type SC3A

STATE OF CALIFORNIA
DEPARTMENT OF TRANSPORTATION

ELECTRICAL SYSTEMS (LIGHTING AND SIGN ILLUMINATION CONTROL)

NO SCALE

RSP ES-15D DATED OCTOBER 5, 2007 SUPERCEDES STANDARD PLAN ES-15D DATED MAY 1, 2006 - PAGE 472 OF THE STANDARD PLANS BOOK DATED MAY 2006.

REVISED STANDARD PLAN RSP ES-15D

2006 REVISED STANDARD PLAN RSP ES-15D

9-10-07

DIST	COUNTY	ROUTE	POST MILES TOTAL PROJECT	SHEET No.	TOTAL SHEETS
04	Ala	680	M3.6/R6.5	129	163

REGISTERED CIVIL ENGINEER 4-20-12 DATE

6-18-12
PLANS APPROVAL DATE

REGISTERED PROFESSIONAL ENGINEER LINAN WANG No. C54714 Exp. 12-31-13 CIVIL STATE OF CALIFORNIA

THE STATE OF CALIFORNIA OR ITS OFFICERS OR AGENTS SHALL NOT BE RESPONSIBLE FOR THE ACCURACY OR COMPLETENESS OF ELECTRONIC COPIES OF THIS PLAN SHEET.

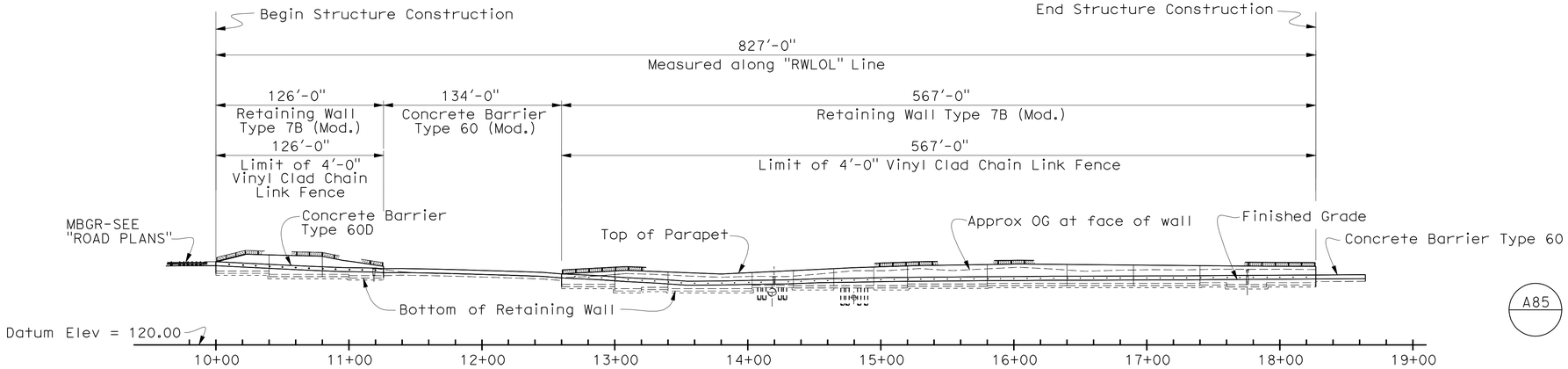

DEVELOPED MIRROR ELEVATION

A76A B0-3 B3-9

1" = 50'

QUANTITIES

STRUCTURE EXCAVATION (RETAINING WALL)	2,908	CY
STRUCTURE BACKFILL (RETAINING WALL)	948	CY
30" CAST-IN-DRILLED-HOLE CONCRETE PILING	280	LF
STRUCTURAL CONCRETE, RETAINING WALL	1,023	CY
ARCHITECTURAL TREATMENT	4,345	SQFT
BAR REINFORCING STEEL (RETAINING WALL)	111,766	LB
MINOR CONCRETE (GUTTER) (LF)	700	LF
CHAIN LINK FENCE (TYPE CL-4, VINYL-CLAD)	695	LF
CONCRETE BARRIER (TYPE 60D)	700	LF
CONCRETE BARRIER (TYPE 60 MODIFIED)	43	LF
CONCRETE BARRIER (TYPE 736 MODIFIED)	10	LF

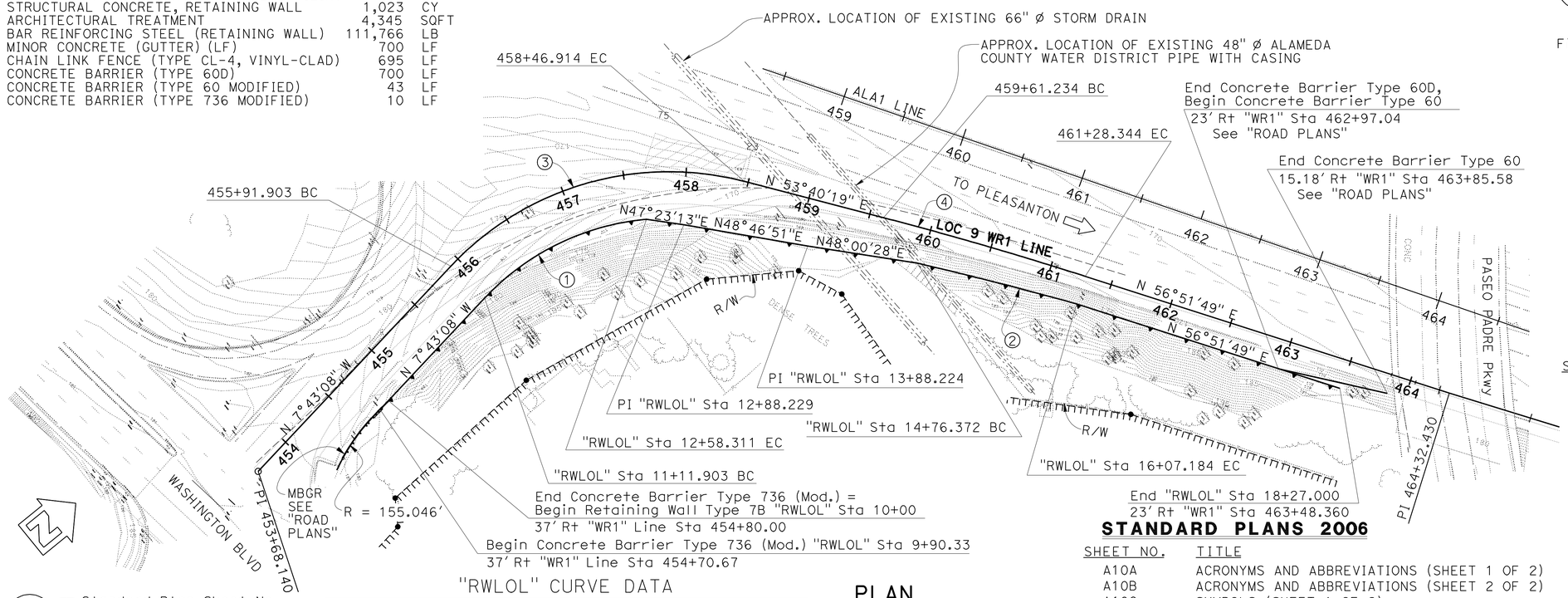

PLAN

1" = 50'

Standard Plan Sheet No.

Detail No.

"RWLOL" CURVE DATA

No.	R	Δ	T	L
1	201.000'	41°44'02.800"	76.622'	146.408'
2	2977.000'	2°31'03.516"	65.416'	130.812'

"WR1" CURVE DATA

No.	R	Δ	T	L
3	238.000'	61°23'27.500"	141.289'	255.011'
4	3000.000'	3°11'29.640"	83.577'	167.110'

NOTE:
THE CONTRACTOR SHALL VERIFY ALL CONTROLLING FIELD DIMENSIONS BEFORE ORDERING OR FABRICATING ANY MATERIAL.

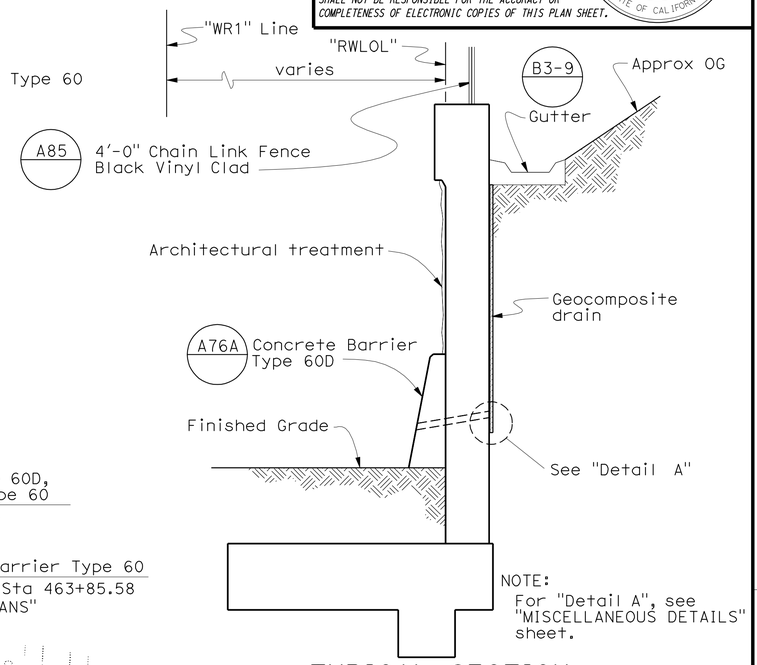

NOTE:
For "Detail A", see "MISCELLANEOUS DETAILS" sheet.

TYPICAL SECTION

½" = 1'-0"

INDEX TO PLANS

SHEET NO.	TITLE
1.	GENERAL PLAN
2.	STRUCTURE PLAN NO.1
3.	STRUCTURE PLAN NO.2
4.	DETAILS AT UTILITY CROSSING
5.	RETAINING WALL TYPE 7B (Mod.)-DETAILS NO.1
6.	RETAINING WALL TYPE 7B (Mod.)-DETAILS NO.2
7.	ARCHITECTURAL TREATMENT DETAILS NO.1
8.	ARCHITECTURAL TREATMENT DETAILS NO.2
9.	ARCHITECTURAL TREATMENT DETAILS NO.3
10.	MISCELLANEOUS DETAILS NO. 1
11.	MISCELLANEOUS DETAILS NO. 2
12.	LOG OF TEST BORINGS 1 OF 8
13.	LOG OF TEST BORINGS 2 OF 8
14.	LOG OF TEST BORINGS 3 OF 8
15.	LOG OF TEST BORINGS 4 OF 8
16.	LOG OF TEST BORINGS 5 OF 8
17.	LOG OF TEST BORINGS 6 OF 8
18.	LOG OF TEST BORINGS 7 OF 8
19.	LOG OF TEST BORINGS 8 OF 8

STANDARD PLANS 2006

SHEET NO.	TITLE
A10A	ACRONYMS AND ABBREVIATIONS (SHEET 1 OF 2)
A10B	ACRONYMS AND ABBREVIATIONS (SHEET 2 OF 2)
A10C	SYMBOLS (SHEET 1 OF 2)
A62B	LIMITS OF PAYMENT FOR EXCAVATION AND BACKFILL - BRIDGE SURCHARGE AND WALL
A76A	CONCRETE BARRIER TYPE 60
A85	CHAIN LINK FENCE
B0-3	BRIDGE DETAILS
B3-8	RETAINING WALL DETAILS NO.1
B3-9	RETAINING WALL DETAILS NO.2
B11-56	CONCRETE BARRIER TYPE 736

Minh Ha
DESIGN ENGINEER

	BY	CHECKED			
DESIGN	Tuong Ha	Linan Wang	LOAD & RESISTANCE FACTOR DESIGN		
DETAILS	Wei Zhang	Linan Wang/S. Damian	LAYOUT	Tuong Ha	Sergio Damian
QUANTITIES	Tuong Ha	Linan Wang	SPECIFICATIONS	BY	PLANS AND SPECS COMPARED

ORIGINAL SCALE IN INCHES FOR REDUCED PLANS 0 1 2 3

STATE OF CALIFORNIA
DEPARTMENT OF TRANSPORTATION

DIVISION OF ENGINEERING SERVICES
STRUCTURE DESIGN
DESIGN BRANCH 4

BRIDGE NO. 33E-0219
POST MILE 5.37

RETAINING WALL NO. 2
GENERAL PLAN

UNIT: 3579
PROJECT NUMBER & PHASE: 04120005280
CONTRACT NO.: 04-4G1001

DISREGARD PRINTS BEARING EARLIER REVISION DATES

REVISION DATES 01-30-12 04-18-12 04-19-12 04-04-12

SHEET 1 OF 19

USERNAME => s124496 DATE PLOTTED => 02-JUL-2012 TIME PLOTTED => 13:31

DIST	COUNTY	ROUTE	POST MILES TOTAL PROJECT	SHEET No.	TOTAL SHEETS
04	Ala	680	M3.6/R6.5	130	163

REGISTERED CIVIL ENGINEER 4-20-12 DATE

6-18-12
PLANS APPROVAL DATE

REGISTERED PROFESSIONAL ENGINEER Linan Wang No. C54714 Exp. 12/31/13 CIVIL STATE OF CALIFORNIA

The State of California or its officers or agents shall not be responsible for the accuracy or completeness of electronic copies of this plan sheet.

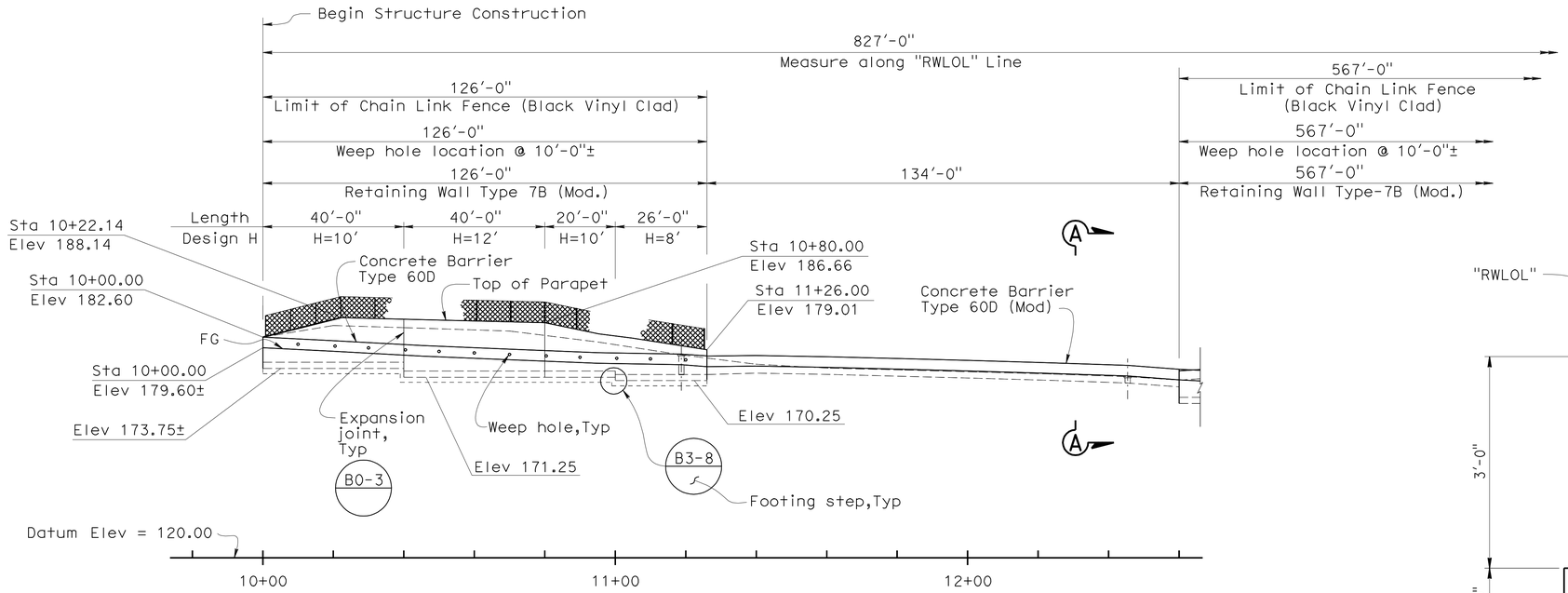

DEVELOPED MIRROR ELEVATION

A76A B0-3 B3-8 B3-9

1" = 20'

NOTE: "SECTION A-A" see "MISCELLANEOUS DATEILS NO. 1" sheet

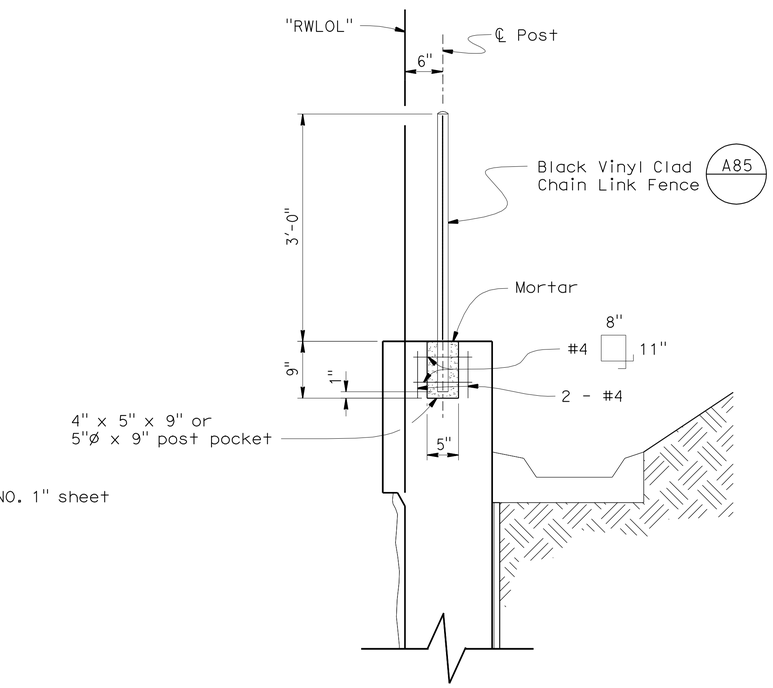

POST POCKET DETAIL

1" = 1'-0"

Note

Detail supersedes post pocket details on Standard Plan, A85, page 111 of the Standand Plans Dated 2006.

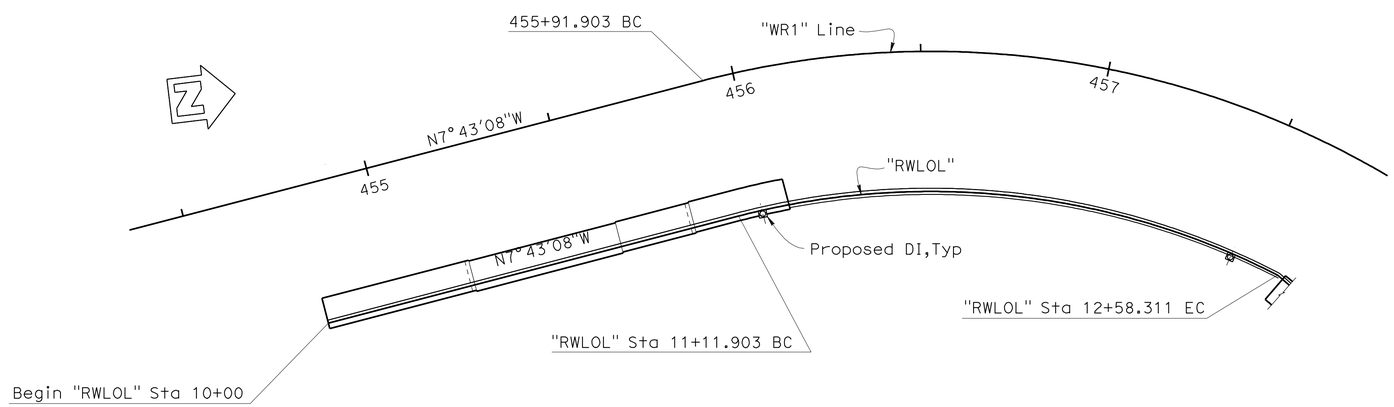

PLAN

1" = 20'

NOTE:
THE CONTRACTOR SHALL VERIFY ALL CONTROLLING FIELD DIMENSIONS BEFORE ORDERING OR FABRICATING ANY MATERIAL.

	BY	CHECKED
DESIGN	Tuong Ha	Linan Wang
DETAILS	Wei Zhang	Linan Wang
QUANTITIES	Tuong Ha	Linan Wang

STATE OF CALIFORNIA
DEPARTMENT OF TRANSPORTATION

DIVISION OF ENGINEERING SERVICES
STRUCTURE DESIGN
DESIGN BRANCH 4

BRIDGE NO. 33E-0219
POST MILE 5.37

RETAINING WALL NO. 2
STRUCTURE PLAN NO.1

STRUCTURES DESIGN DETAIL SHEET (ENGLISH) (REV. 09-01-10)

ORIGINAL SCALE IN INCHES FOR REDUCED PLANS 0 1 2 3

UNIT: 3579
PROJECT NUMBER & PHASE: 04120005280
CONTRACT NO.: 04-4G1001

DISREGARD PRINTS BEARING EARLIER REVISION DATES

REVISION DATES: 01-31-12 04-11-12 04-13-12 04-19-12

SHEET 2 OF 19

FILE => 33e0219-a-sp01.dgn

USERNAME => s124496 DATE PLOTTED => 02-JUL-2012 TIME PLOTTED => 13:32

DIST	COUNTY	ROUTE	POST MILES TOTAL PROJECT	SHEET No.	TOTAL SHEETS
04	Ala	680	M3.6/R6.5	131	163

REGISTERED CIVIL ENGINEER — DATE 4-20-12

6-18-12
PLANS APPROVAL DATE

REGISTERED PROFESSIONAL ENGINEER — Linan Wang — No. C54714 — Exp. 12/31/13 — CIVIL — STATE OF CALIFORNIA

The State of California or its officers or agents shall not be responsible for the accuracy or completeness of electronic copies of this plan sheet.

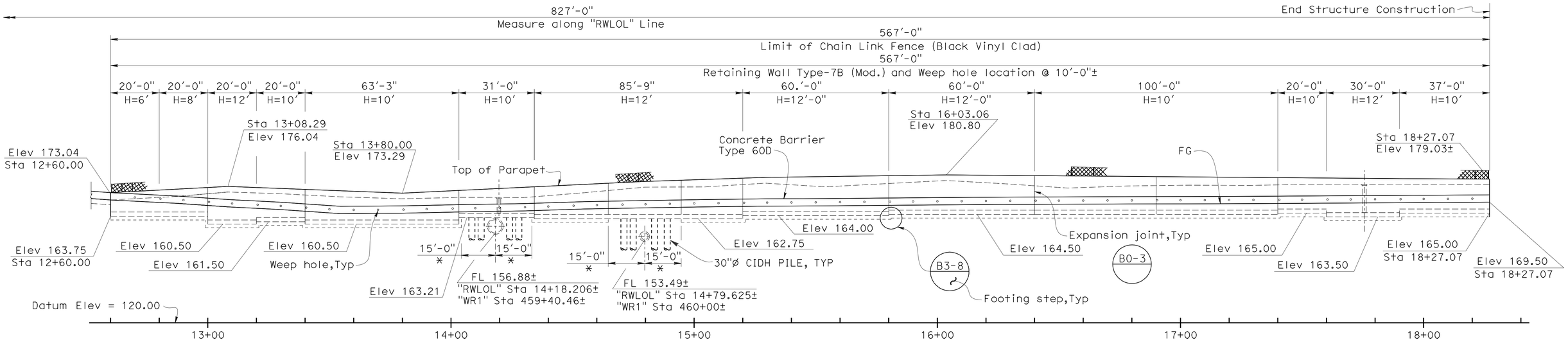

DEVELOPED MIRROR ELEVATION

1" = 20'

A76A B0-3 B3-8 B3-9

NOTES:

* Indicates Pile Support Limit

For CIDH Pile details, see "DETAILS AT UTILITY CROSSING" sheet.

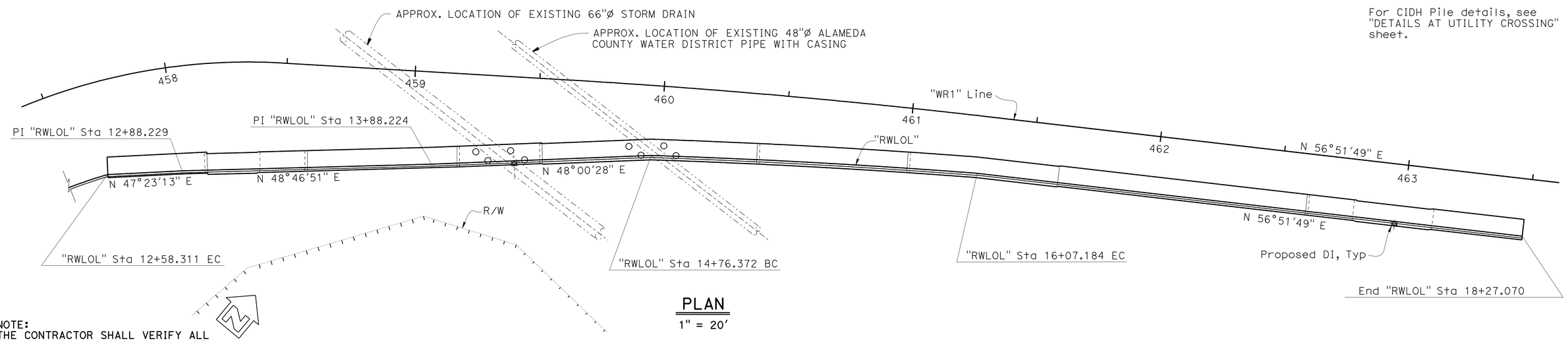

PLAN

1" = 20'

NOTE:
THE CONTRACTOR SHALL VERIFY ALL CONTROLLING FIELD DIMENSIONS BEFORE ORDERING OR FABRICATING ANY MATERIAL.

	BY	CHECKED
DESIGN	Tuong Ha	Linan Wang
DETAILS	Wei Zhang	Linan Wang
QUANTITIES	Tuong Ha	Linan Wang

STATE OF CALIFORNIA
DEPARTMENT OF TRANSPORTATION

DIVISION OF ENGINEERING SERVICES
STRUCTURE DESIGN
DESIGN BRANCH 4

BRIDGE NO. 33E-0219
POST MILE 5.37

RETAINING WALL NO. 2
STRUCTURE PLAN NO.2

STRUCTURES DESIGN DETAIL SHEET (ENGLISH) (REV. 09-01-10)

ORIGINAL SCALE IN INCHES FOR REDUCED PLANS 0 1 2 3

UNIT: 3579
PROJECT NUMBER & PHASE: 04120005280
CONTRACT NO.: 04-4G1001

DISREGARD PRINTS BEARING EARLIER REVISION DATES

REVISION DATES: 01-31-12 04-16-12 04-19-12 04-20-12

SHEET 3 OF 19

FILE => 33e0219-a-sp02.dgn

USERNAME => s124496 DATE PLOTTED => 02-JUL-2012 TIME PLOTTED => 13:32

DIST	COUNTY	ROUTE	POST MILES TOTAL PROJECT	SHEET No.	TOTAL SHEETS
04	Ala	680	M3.6/R6.5	132	163

REGISTERED CIVIL ENGINEER 4-20-12 DATE

6-18-12
PLANS APPROVAL DATE

REGISTERED PROFESSIONAL ENGINEER Linan Wang No. C54714 Exp. 12/31/13 CIVIL STATE OF CALIFORNIA

The State of California or its officers or agents shall not be responsible for the accuracy or completeness of electronic copies of this plan sheet.

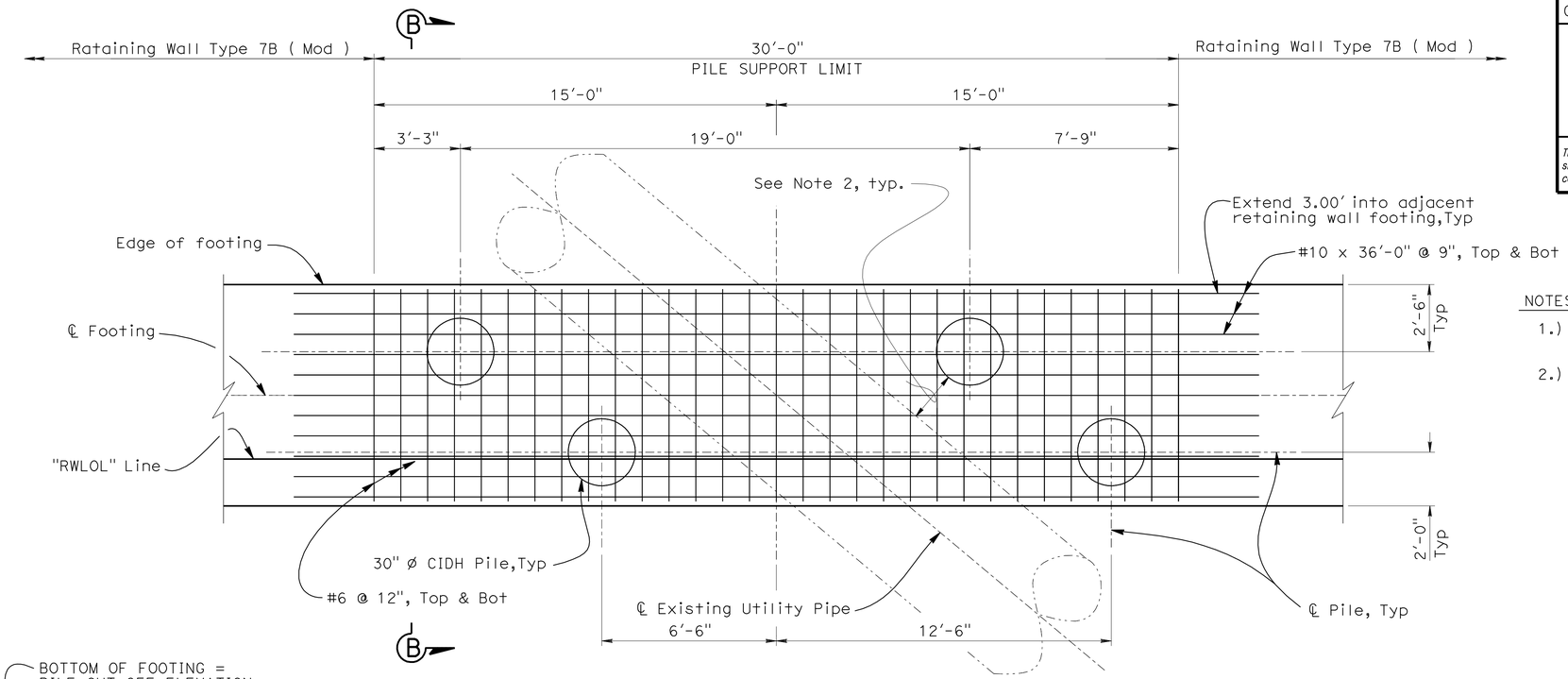

PARTIAL PLAN @ PIPE CROSSING

3/8" = 1'

NOTES

1.) Contractor shall locate the underground utilities before constructing CIDH piles.

2.) The minimum clearance between utility pipe and CIDH pile shall be 2'-0".

NOTE:
Reinforcing in footing of Retaining Wall Type 7B (Mod) not shown.
For details see "RETAINING WALL TYPE 7B (MOD) - DETAILS NO. 1" AND "RETAINING WALL TYPE 7B (MOD) - DETAILS NO. 2" sheet

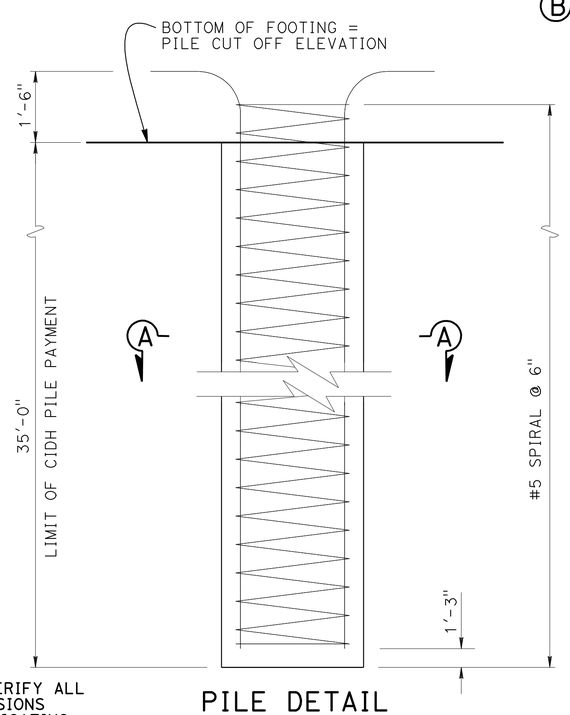

PILE DETAIL

3/4"=1'-0"

NOTE:
THE CONTRACTOR SHALL VERIFY ALL CONTROLLING FIELD DIMENSIONS BEFORE ORDERING OR FABRICATING ANY MATERIAL.

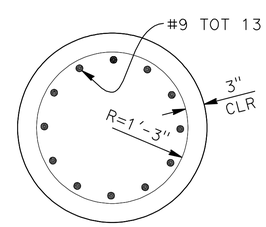

SECTION A-A

1"=1'-0"

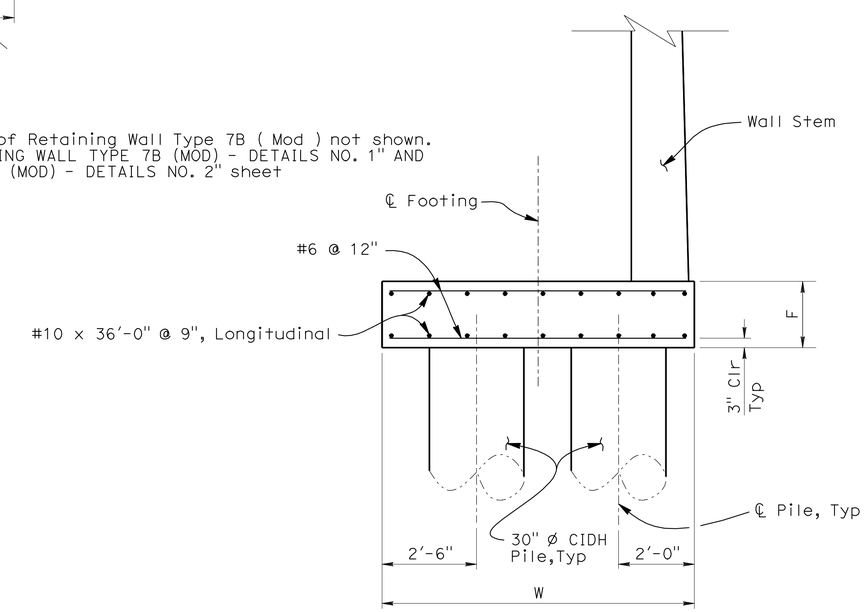

SECTION B-B

1/2"=1'-0"

NOTE:
1. For Reinforcing in Wall Stem see "RETAINING WALL TYPE 7B(MOD) - DETAILS NO. 1" sheet.
2. For Pile Reinforcement see "SECTION A-A" this sheet.
3. For "F" and "A" value see "RETAINING WALL TYPE 7B(MOD) - DETAILS NO. 2" sheet.
4. For location of Pile Support Limit, see "STRUCTURE PLAN NO. 2" sheet.

	BY	CHECKED
DESIGN	Tuong Ha	Linan Wang
DETAILS	Wei Zhang / A. Onodera	Linan Wang
QUANTITIES	Tuong Ha	Linan Wang

STATE OF CALIFORNIA
DEPARTMENT OF TRANSPORTATION

DIVISION OF ENGINEERING SERVICES
STRUCTURE DESIGN
DESIGN BRANCH 4

BRIDGE NO. 33E-0219
POST MILE 5.37

RETAINING WALL NO. 2
DETAILS AT UTILITY CROSSING

STRUCTURES DESIGN DETAIL SHEET (ENGLISH) (REV. 09-01-10)

ORIGINAL SCALE IN INCHES FOR REDUCED PLANS 0 1 2 3

UNIT: 3579
PROJECT NUMBER & PHASE: 04120005280
CONTRACT NO.: 04-4G1001

DISREGARD PRINTS BEARING EARLIER REVISION DATES

REVISION DATES 04-01-12 04-06-12 04-16-12 04-26-12

SHEET 4 OF 19

FILE => 33e0219-b-dtsatutil.dgn

USERNAME => s124496 DATE PLOTTED => 02-JUL-2012 TIME PLOTTED => 13:32

DIST	COUNTY	ROUTE	POST MILES TOTAL PROJECT	SHEET No.	TOTAL SHEETS
04	Ala	680	M3.6/R6.5	133	163

REGISTERED CIVIL ENGINEER 4-20-12 DATE

6-18-12
PLANS APPROVAL DATE

REGISTERED PROFESSIONAL ENGINEER Linan Wang No. C54714 Exp. 12/31/13 CIVIL STATE OF CALIFORNIA

The State of California or its officers or agents shall not be responsible for the accuracy or completeness of electronic copies of this plan sheet.

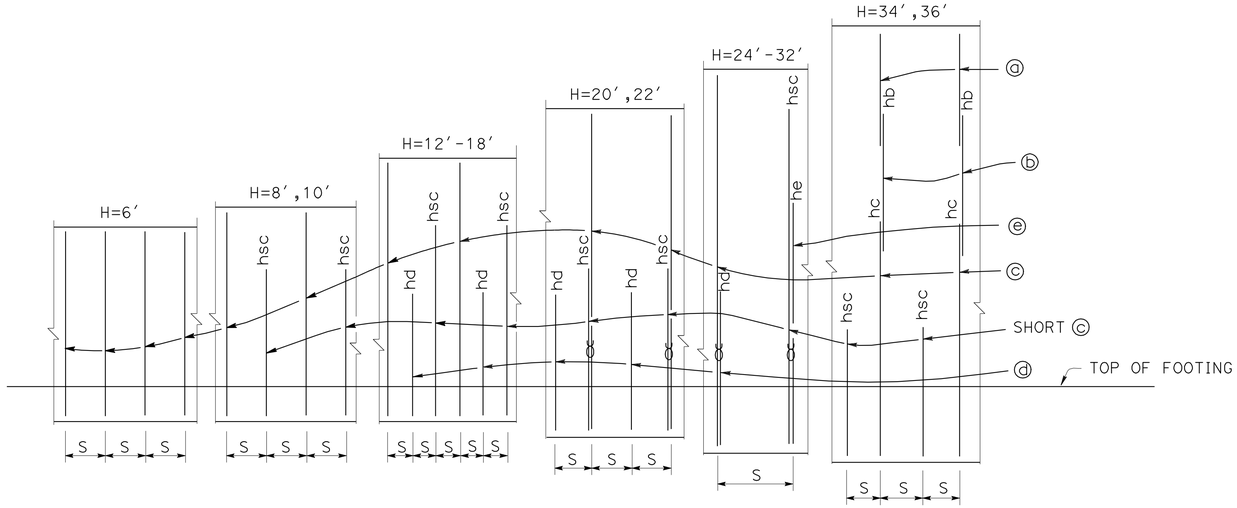

ELEVATION
No Scale

NOTE:

"hb", "hsc", "hc", "hd" and "he" above bars indicate distance from top of footing to upper end of the bars, see table.

DESIGN DATA

Design: AASHTO LRFD Bridge Design Specifications, 4th edition with California Amendments

LS: Varied surcharge on level ground surface

CT: 54 kip maximum traffic impact loading evenly distributed over 10 feet at top of the barrier and 1:1 distribution down and outward

EQE: Mononabe-Okabe Method
K_h = 0.36
K_v = 0.0

Soil: ϕ = 30°
γ = 120 pcf

Reinforced Concrete: f′c = 3600 psi
fy = 60,000 psi

Load Combinations and Limit States

Service I Q=1.00DC+1.00EV+1.00EH+1.00LS+Td

Strength I Q=aDC+βEV+1.50EH+1.75LS+Td

Extreme I Q=1.00DC+1.00EV+1.00EH+1.00EQD+1.00EQE+Td

Extreme II Q=1.00DC+1.00EV+1.00EH+1.00CT+Td

Where:
- Q: Force Effects
- a: 1.25 or 0.90, Which ever Controls Design
- β: 1.35 or 1.00, which ever Controls Design
- DC: Dead Load of Structure Components
- EV: Vertical Earth Fill Pressure
- LS: Live Load Surcharge
- EQE: Seismic Earth Pressure
- EQD: Soil and Structure Components Inertia. Soil inertia ignored for stem design
- CT: Vehicular Collision Force
- Td: Anchor Design Load

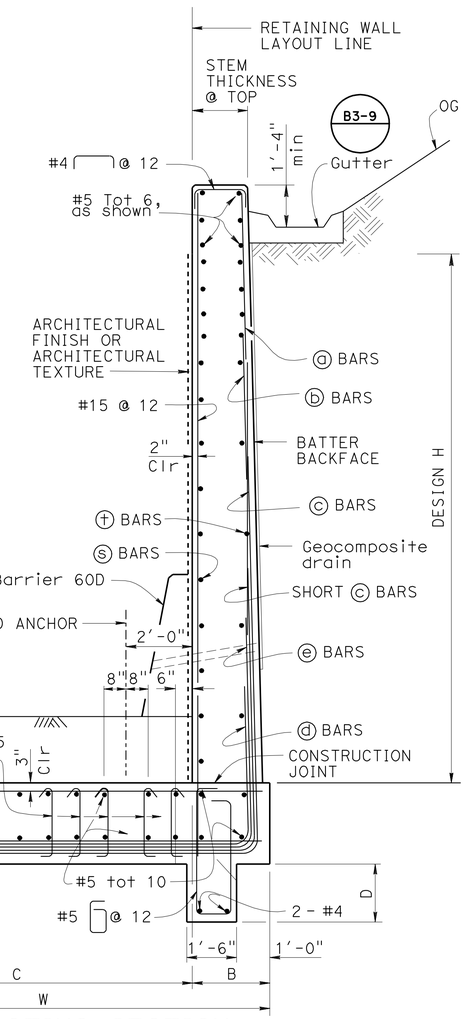

SPREAD FOOTING SECTION
No Scale

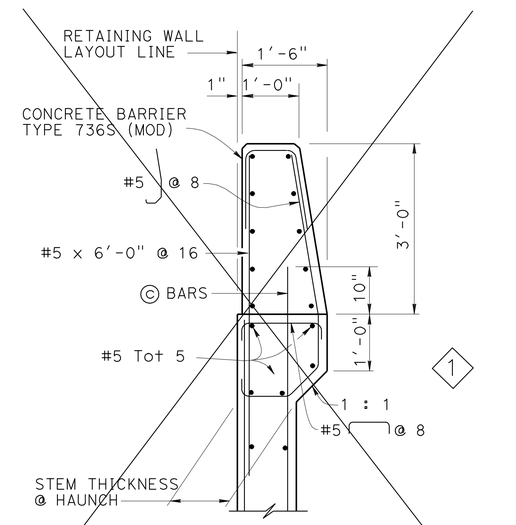

DETAIL A - WITH HAUNCH
¾ = 1′-0″

For Details not shown, see "DETAIL A - WITHOUT HAUNCH"

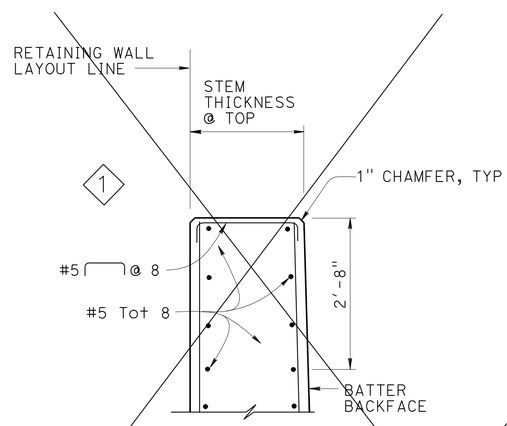

DETAIL A - WITHOUT HAUNCH
¾ = 1′-0″

NOTES:

1. For Retaining wall Architectural finish or texture see Details elsewhere in Project Plans
2. For Details not shown and Drainage Notes see B3-9
3. Footing cover, 2′-0″ minimum.
4. For H=6′ through 10′, extend ⓑ bars into Barrier for stem with haunch.
5. Shift ⓒ bars, ⓓ bars and ⓔ bars as required to clear formed hole for ground anchor.
6. ~~Dimensions may vary with roadway cross slope and with certain thickness of surfacing. See Project Plans.~~
7. Footing is designed to resist 1.33 Td assuming the maximum anchor spacing shown in the table.
8. Footing key shall be poured against undisturbed material

STANDARD DRAWING

FILE NO. xs14-375-1

APPROVAL DATE July 2011

1 Delete details
2 Modify details
3 Delete note
4 Revise value

STATE OF CALIFORNIA DEPARTMENT OF TRANSPORTATION

DIVISION OF ENGINEERING SERVICES

BRIDGE NO. 33E-0219
POST MILE 5.37

RETAINING WALL NO. 2
RETAINING WALL TYPE 7B (MOD.) - DETAILS NO. 1

DS OSD 2147A (ENGLISH STANDARD DRAWING "XS" BORDER REV. (02-02-11)

ORIGINAL SCALE IN INCHES FOR REDUCED PLANS 0 1 2 3

UNIT: 3579
PROJECT NUMBER & PHASE: 04120005280
CONTRACT NO.: 04-4G1001

DISREGARD PRINTS BEARING EARLIER REVISION DATES

REVISION DATES 02-06-12 04-04-12 04-13-12 04-19-12

SHEET 5 OF 19

FILE => 33e0219-c-xs14-375-1.dgn

USERNAME => s124496 DATE PLOTTED => 02-JUL-2012 TIME PLOTTED => 13:32

DIST	COUNTY	ROUTE	POST MILES TOTAL PROJECT	SHEET No.	TOTAL SHEETS
04	Ala	680	M3.6/R6.5	134	163

REGISTERED CIVIL ENGINEER 4-20-12 DATE

6-18-12
PLANS APPROVAL DATE

REGISTERED PROFESSIONAL ENGINEER
Linan Wang
No. C54714
Exp. 12/31/13
CIVIL
STATE OF CALIFORNIA

The State of California or its officers or agents shall not be responsible for the accuracy or completeness of electronic copies of this plan sheet.

TABLE OF WALL DIMENSIONS, REINFORCING STEEL AND BEARING STRESS DATA

DESIGN H	STEM WITHOUT HUANCH			
	6′	8′	10′	12′
W ③	9′-6"	9′-6"	10′-0"	12′-0"
B ③	1′-2"	1′-2"	1′-5"	1′-9"
C ③	8′-4"	8′-4"	8′-7"	10′-3"
D ③	1′-0"	1′-6"	2′-3"	3′-0"
F ③	1′-9"	1′-9"	2′-0"	2′-6"
STEM THICKNESS AT TOP ①	1′-0"	1′-0"	1′-3"	1′-7"
~~STEM THICKNESS AT HAUNCH ②~~	~~1′-0"~~	~~1′-0"~~	~~1′-3"~~	
BATTER	0	0	0	0
S	0′-8"	0′-8"	0′-7"	0′-6"
ⓐ BARS				
ⓑ BARS				
hb				
ⓒ BARS	#5	#5	#5	#5
hsc		7′-10"	9′-10"	11′-10"
hc				
ⓓ BARS				#5
hd				3′-3"
ⓔ BARS				
he				
ⓖ BARS				
BARS BUNDLED WITH ⓖ in ftg				
ⓗ BARS				
ⓢ BARS	#4 @ 12	#4 @ 12	#5 @ 15	#5 @ 12
ⓣ BARS	#4 @ 18	#4 @ 18	#4 @ 18	#4 @ 12
Td (KIPS/FT)	0	0	0	0
To (KIPS/FT)	0	0	0	0
Tp = Larger of 1.33 Td & 1.25 To (KIPS/FT)	0	0	0	0
MAX. ANCHOR SPACING				
SER I: B′(ft), q_0' (ksf)	8.6, 0.3	8.1, 0.4	7.6, 0.5	7.1, 0.8
STR Ia: B′(ft), q_0(ksf)	8.3, 1.0	7.6, 1.2	7.0, 1.4	6.2, 1.8
STR, Ib: B′(ft), q_0(ksf)	7.8, 0.8	6.9, 1.0	6.0, 1.3	5.0, 1.8
Ext I: B′(ft), q_0(ksf)	7.9, 0.8	7.1, 0.9	6.2, 1.2	5.0, 1.7
Ext II: B′(ft), q_0(ksf)	2.8, 2.0	2.9, 2.3	3.2, 2.4	3.3, 2.7

NOTE:

ⓗ Bar spacing shown is along the length of the retaining wall.
* denotes values to be determined by designer, and this note is removed afterwards.

LEGEND:

SER: service limit state
STR: strength limit state
EXT: extreme event limit state
B′: effective footing width (ft)
q_0': net bearing stress (ksf)
q_0: gross uniform bearing stress (ksf)
⌒: 2 bar bundle
To: Anchor Lockoff Load
Tp: Anchor Factored Test Load

④

STANDARD DRAWING
FILE NO. xs14-375-2
APPROVAL DATE July 2011

① Added values ③ Modified values
② Delete values ④ Modified Chart

STATE OF CALIFORNIA
DEPARTMENT OF TRANSPORTATION

DIVISION OF ENGINEERING SERVICES

BRIDGE NO. 33E-0219
POST MILE 5.37

RETAINING WALL NO. 2

RETAINING WALL TYPE 7B (MOD.) - DETAILS NO. 2

DS OSD 2147A (ENGLISH STANDARD DRAWING "XS" BORDER REV. (02-02-11)

ORIGINAL SCALE IN INCHES FOR REDUCED PLANS 0 1 2 3

UNIT: 3579
PROJECT NUMBER & PHASE: 04120005280
CONTRACT NO.: 04-4G1001

DISREGARD PRINTS BEARING EARLIER REVISION DATES

REVISION DATES: 02-06-12 03-06-12 04-13-12

SHEET 6 OF 19

FILE => 33e0219-c-xs14-375-2.dgn

USERNAME => s124496 DATE PLOTTED => 02-JUL-2012 TIME PLOTTED => 13:32

DIST	COUNTY	ROUTE	POST MILES TOTAL PROJECT	SHEET No.	TOTAL SHEETS
04	Ala	680	M3.6/R6.5	135	163

REGISTERED CIVIL ENGINEER 4-20-12 DATE

6-18-12
PLANS APPROVAL DATE

REGISTERED PROFESSIONAL ENGINEER
Linan Wang
No. C54714
Exp. 12/31/13
CIVIL
STATE OF CALIFORNIA

The State of California or its officers or agents shall not be responsible for the accuracy or completeness of electronic copies of this plan sheet.

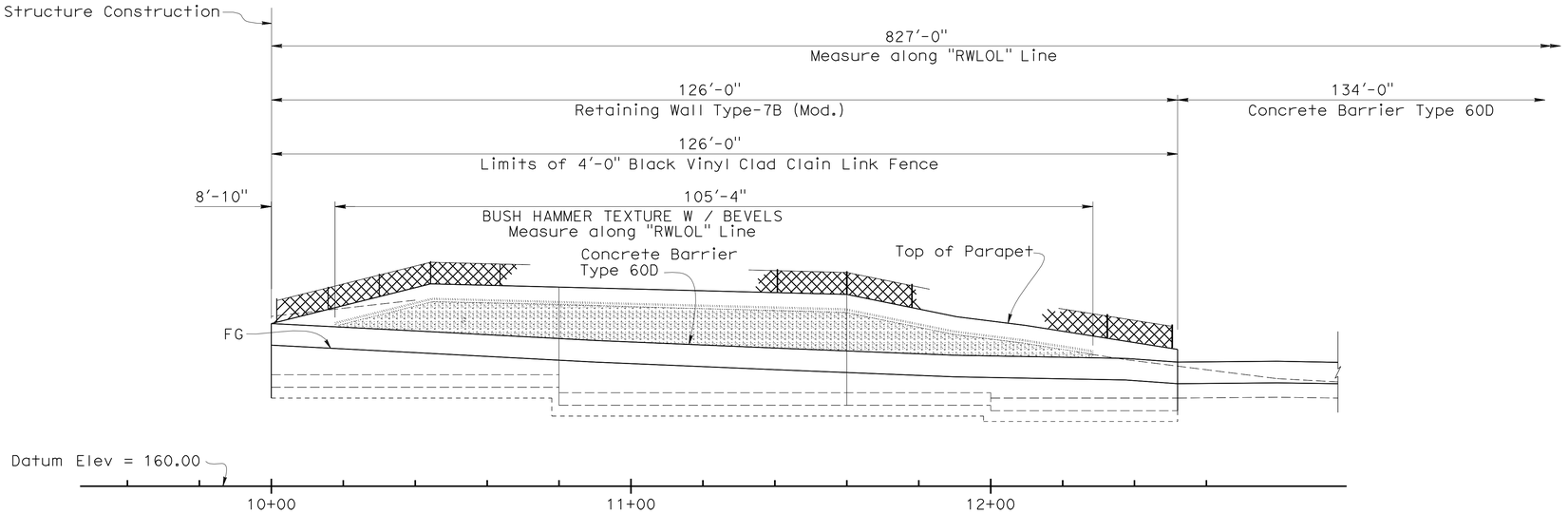

DEVELOPED MIRROR ELEVATION

1" = 10'

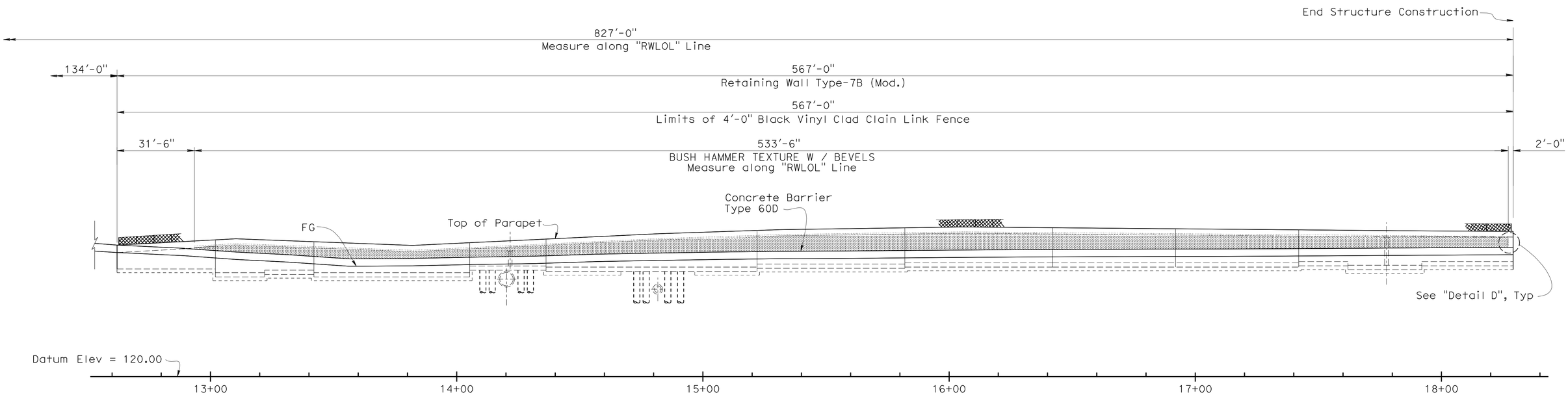

DEVELOPED MIRROR ELEVATION

1" = 20'

NOTE:
THE CONTRACTOR SHALL VERIFY ALL CONTROLLING FIELD DIMENSIONS BEFORE ORDERING OR FABRICATING ANY MATERIAL.

	BY	CHECKED
DESIGN	Tuong Ha	Linan Wang
DETAILS	Wei Zhang	Linan Wang
QUANTITIES	Tuong Ha	Linan Wang

STATE OF CALIFORNIA
DEPARTMENT OF TRANSPORTATION

DIVISION OF ENGINEERING SERVICES
STRUCTURE DESIGN
DESIGN BRANCH 4

BRIDGE NO. 33E-0219
POST MILE 5.37

RETAINING WALL NO. 2

ARCHITECTURAL TREATMENT DETAILS NO.1

STRUCTURES DESIGN DETAIL SHEET (ENGLISH) (REV. 09-01-10)

ORIGINAL SCALE IN INCHES FOR REDUCED PLANS 0 1 2 3

UNIT: 3579
PROJECT NUMBER & PHASE: 04120005280
CONTRACT NO.: 04-4G1001

DISREGARD PRINTS BEARING EARLIER REVISION DATES

REVISION DATES: 02-13-12 04-19-12 03-30-12 04-13-12

SHEET 7 OF 19

FILE => 33e0219-e-p-archtreat01.dgn

USERNAME => s124496 DATE PLOTTED => 02-JUL-2012 TIME PLOTTED => 13:32

DIST	COUNTY	ROUTE	POST MILES TOTAL PROJECT	SHEET No.	TOTAL SHEETS
04	Ala	680	M3.6/R6.5	136	163

REGISTERED CIVIL ENGINEER 4-20-12 DATE

6-18-12
PLANS APPROVAL DATE

REGISTERED PROFESSIONAL ENGINEER Linan Wang No. C54714 Exp. 12/31/13 CIVIL STATE OF CALIFORNIA

The State of California or its officers or agents shall not be responsible for the accuracy or completeness of electronic copies of this plan sheet.

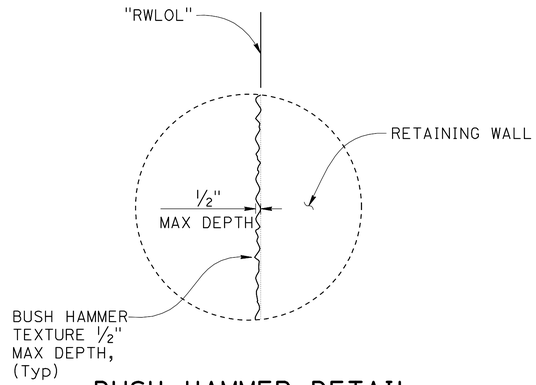

BUSH HAMMER DETAIL

No Scale

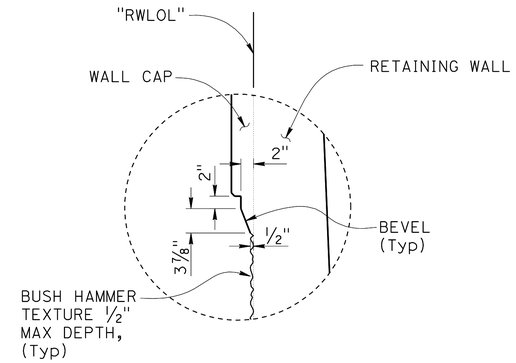

SECTION DETAIL

No Scale

NOTES:
1. Wall cap, face, and bevels shall be Class 1 finish.
2. Fence and concrete gutter not shown for clarity.
3. For Architectural Treatment Reinforcement, see "ARCHITECTURAL TREATMENT DETAILS NO. 3" sheet.

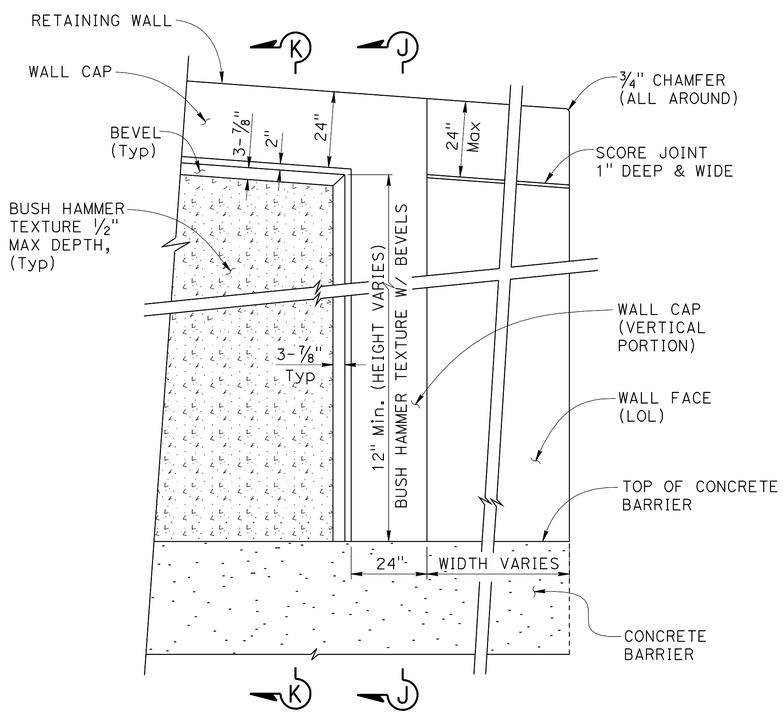

DETAIL "D"

ARCHITECTURAL TEXTURE / ELEVATION (Typ)

No Scale

NOTE:
THE CONTRACTOR SHALL VERIFY ALL CONTROLLING FIELD DIMENSIONS BEFORE ORDERING OR FABRICATING ANY MATERIAL.

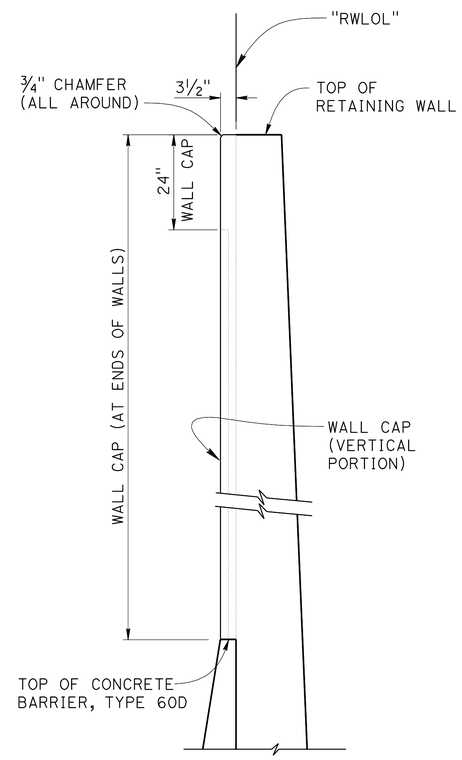

SECTION J-J

No Scale

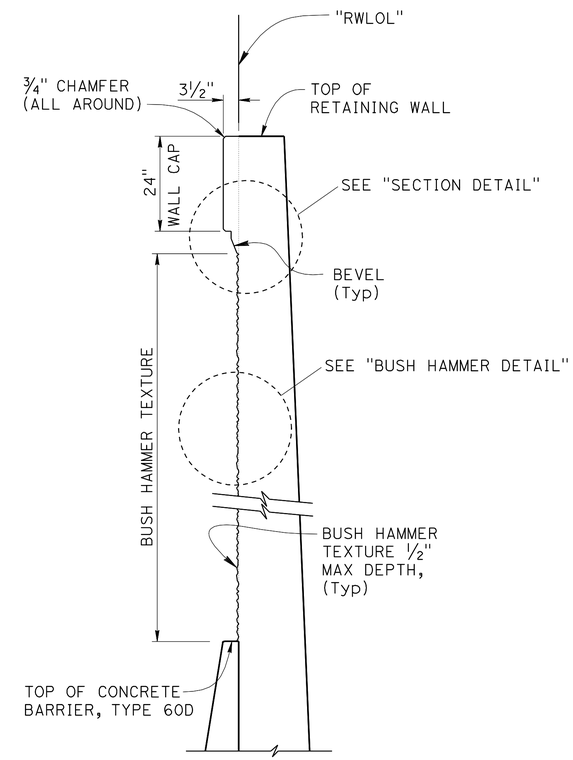

SECTION K-K

No Scale

NOTE:
Chain Link Fence not shown.

DESIGN	BY Tuong Ha	CHECKED Linan Wang	
DETAILS	BY Wei Zhang	CHECKED Linan Wang	
QUANTITIES	BY Tuong Ha	CHECKED Linan Wang	

STATE OF CALIFORNIA
DEPARTMENT OF TRANSPORTATION

DIVISION OF ENGINEERING SERVICES
STRUCTURE DESIGN
DESIGN BRANCH 4

BRIDGE NO. 33E-0219
POST MILE 5.37

RETAINING WALL NO. 2

ARCHITECTURAL TREATMENT DETAILS NO.2

STRUCTURES DESIGN DETAIL SHEET (ENGLISH) (REV. 09-01-10)

ORIGINAL SCALE IN INCHES FOR REDUCED PLANS 0 1 2 3

UNIT: 3579
PROJECT NUMBER & PHASE: 04120005280
CONTRACT NO.: 04-4G1001

DISREGARD PRINTS BEARING EARLIER REVISION DATES

REVISION DATES: 02-06-12 02-17-12 03-2-12 03-08-12

SHEET 8 OF 19

FILE => 33e0219-e-p-archtreat02.dgn

USERNAME => s124496 DATE PLOTTED => 02-JUL-2012 TIME PLOTTED => 14:20

DIST	COUNTY	ROUTE	POST MILES TOTAL PROJECT	SHEET No.	TOTAL SHEETS
04	Ala	680	M3.6/R6.5	137	163

REGISTERED CIVIL ENGINEER 4-20-12 DATE

6-18-12
PLANS APPROVAL DATE

REGISTERED PROFESSIONAL ENGINEER
Linan Wang
No. C54714
Exp. 12/31/13
CIVIL
STATE OF CALIFORNIA

The State of California or its officers or agents shall not be responsible for the accuracy or completeness of electronic copies of this plan sheet.

NOTES:
1. Wall cap, face, and bevels shall be Class 1 finish.
2. Fence and concrete gutter not shown for clarity.
3. For Retaining Wall Type 7B (Mod.) reinforcement, see "Retaining Wall Type 7B (Mod) Details No. 1" sheet.
4. For additional Architectural Treatment Details, see "ARCHITECTURAL TREATMENT DETAILS NO. 1" and "ARCHITECTURAL TREATMENT DETAILS NO. 2" sheets.

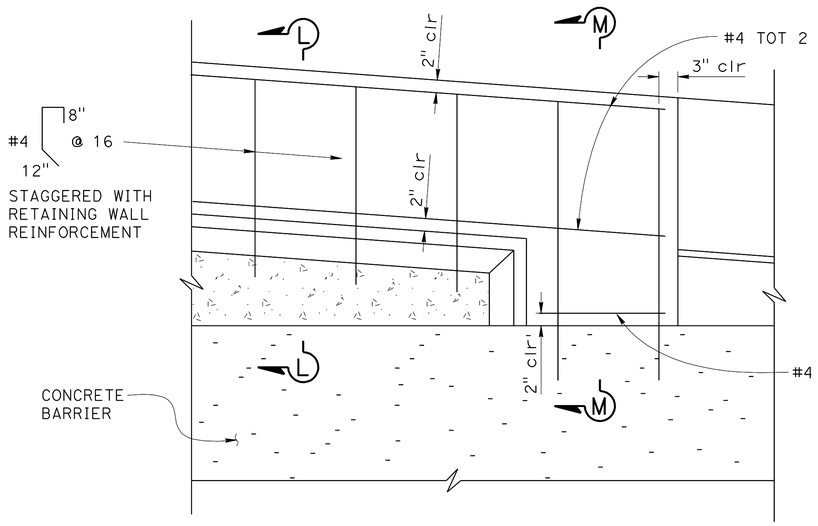

ELEVATION
No Scale

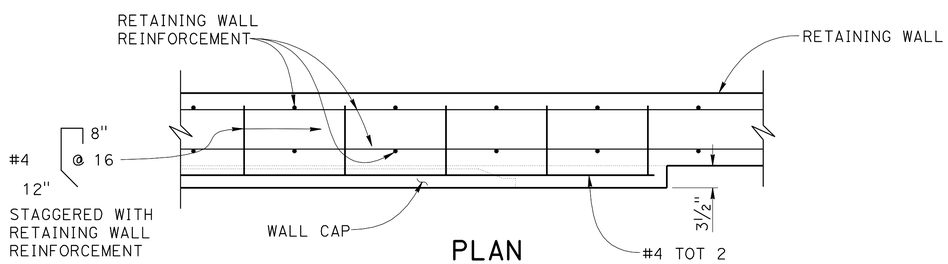

PLAN
No Scale

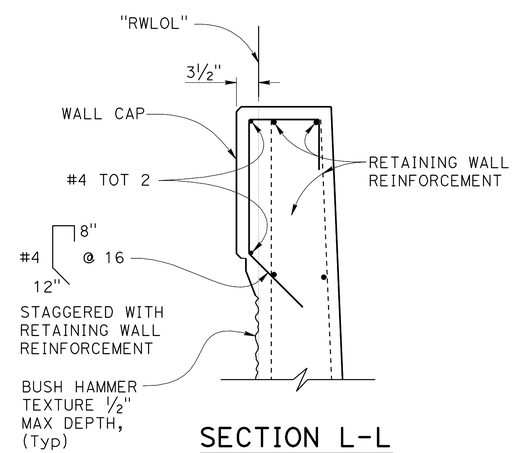

SECTION L-L

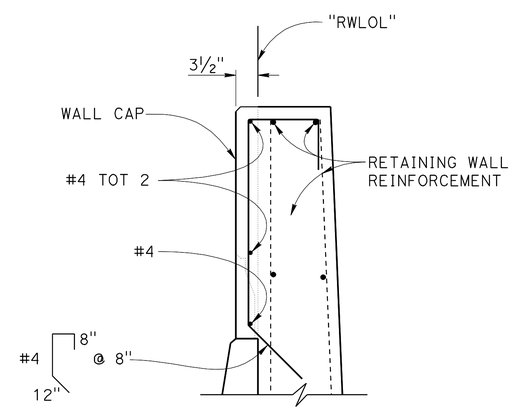

SECTION M-M

REINFORCEMENT AT WALL CAP
No Scale

NOTE:
THE CONTRACTOR SHALL VERIFY ALL CONTROLLING FIELD DIMENSIONS BEFORE ORDERING OR FABRICATING ANY MATERIAL.

NOTE:
Chain Link Fence not shown

	BY	CHECKED
DESIGN	Tuong Ha	Linan Wang
DETAILS	Wei Zhang	Linan Wang
QUANTITIES	Tuong Ha	Linan Wang

STATE OF CALIFORNIA
DEPARTMENT OF TRANSPORTATION

DIVISION OF ENGINEERING SERVICES
STRUCTURE DESIGN
DESIGN BRANCH 4

BRIDGE NO. 33E-0219
POST MILE 5.37

RETAINING WALL NO. 2
ARCHITECTURAL TREATMENT DETAILS NO.3

STRUCTURES DESIGN DETAIL SHEET (ENGLISH) (REV. 09-01-10)

ORIGINAL SCALE IN INCHES FOR REDUCED PLANS 0 1 2 3

UNIT: 3579
PROJECT NUMBER & PHASE: 04120005280
CONTRACT NO.: 04-4G1001

DISREGARD PRINTS BEARING EARLIER REVISION DATES

REVISION DATES: 02-08-12 02-17-12 03-2-12 03-08-12

SHEET 9 OF 19

FILE => 33e0219-e-p-archtreat03.dgn

USERNAME => s124496 DATE PLOTTED => 02-JUL-2012 TIME PLOTTED => 13:33

DIST	COUNTY	ROUTE	POST MILES TOTAL PROJECT	SHEET No.	TOTAL SHEETS
04	Ala	680	M3.6/R6.5	138	163

REGISTERED CIVIL ENGINEER 4-20-12 DATE

6-18-12
PLANS APPROVAL DATE

REGISTERED PROFESSIONAL ENGINEER Linan Wang No. C54714 Exp. 12/31/13 CIVIL STATE OF CALIFORNIA

The State of California or its officers or agents shall not be responsible for the accuracy or completeness of electronic copies of this plan sheet.

LEGEND:

Indicates Structure Excavation

Indicates Structure Backfill

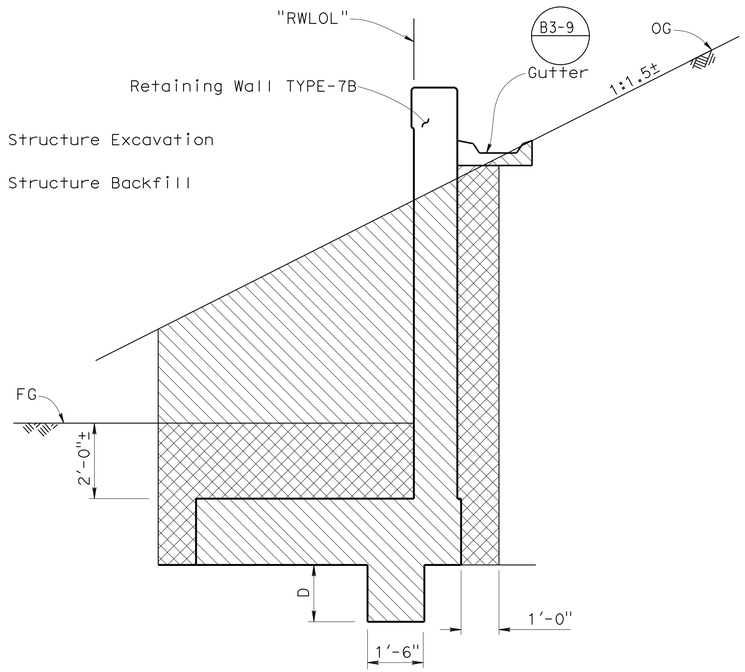

TYPICAL EXCAVATION AND BACKFILL

No scale

NOTES:
1. Chain Link Fence not shown.
2. For value of "D" see "RTETAINING WALL TYPE 7B (MOD.)- DETAILS NO. 2"sheet

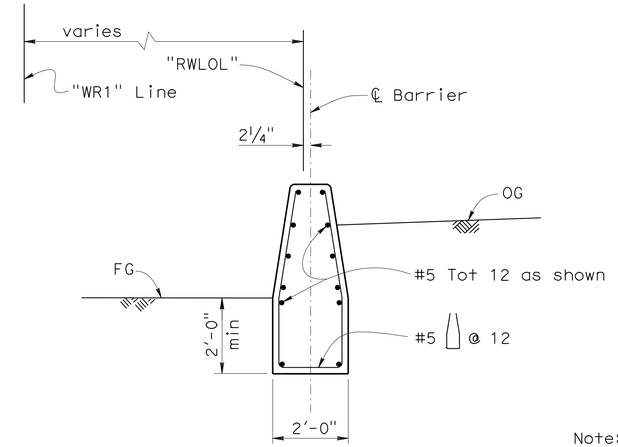

Note: For information not shown, see STANDARD PLAN A76A

SECTION A-A
CONCRETE BARRIER TYPE 60(MOD.)

No scale

A76A

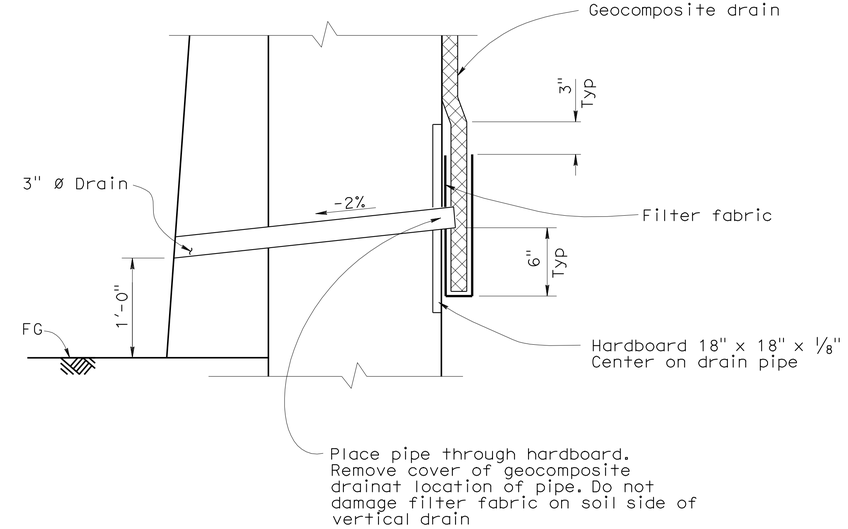

DETAIL "A"

No scale

NOTE:
THE CONTRACTOR SHALL VERIFY ALL CONTROLLING FIELD DIMENSIONS BEFORE ORDERING OR FABRICATING ANY MATERIAL.

	BY	CHECKED
DESIGN	Tung Ha	Linan Wang
DETAILS	Wei zhang	Linan Wang
QUANTITIES	Tuong Ha	Linan Wang

STATE OF CALIFORNIA
DEPARTMENT OF TRANSPORTATION

DIVISION OF ENGINEERING SERVICES
STRUCTURE DESIGN
DESIGN BRANCH 4

BRIDGE NO. 33E-0219
POST MILE 5.37

RETAINING WALL NO. 2
MISCELLANEOUS DETAILS NO. 1

STRUCTURES DESIGN DETAIL SHEET (ENGLISH) (REV. 09-01-10)

ORIGINAL SCALE IN INCHES FOR REDUCED PLANS 0 1 2 3

UNIT: 3579
PROJECT NUMBER & PHASE: 04120005280
CONTRACT NO.: 04-4G1001

DISREGARD PRINTS BEARING EARLIER REVISION DATES

REVISION DATES: 02-04-12 02-14-12 03-09-12 04-13-12

SHEET 10 OF 19

FILE => 33e0219-u-miscdt01.dgn

USERNAME => s124496 DATE PLOTTED => 02-JUL-2012 TIME PLOTTED => 13:33

DIST	COUNTY	ROUTE	POST MILES TOTAL PROJECT	SHEET No.	TOTAL SHEETS
04	Ala	680	M3.6/R6.5	139	163

REGISTERED CIVIL ENGINEER 4-20-12 DATE

6-18-12
PLANS APPROVAL DATE

REGISTERED PROFESSIONAL ENGINEER
Linan Wang
No. C54714
Exp. 12/31/13
CIVIL
STATE OF CALIFORNIA

The State of California or its officers or agents shall not be responsible for the accuracy or completeness of electronic copies of this plan sheet.

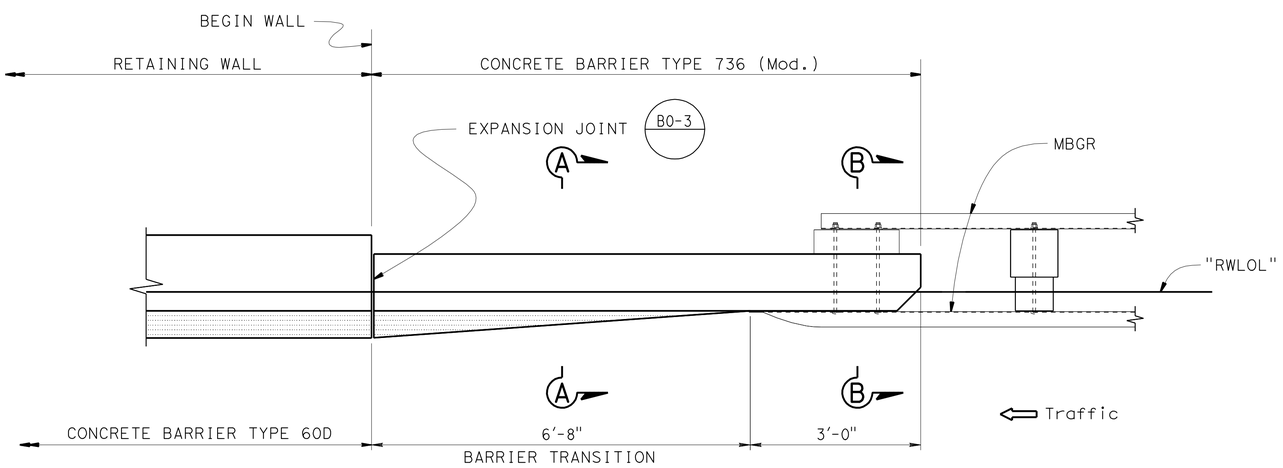

CONCRETE BARRIER TYPE 736 (MOD.) TRANSITION

B11-56

3/4" = 1'-0"

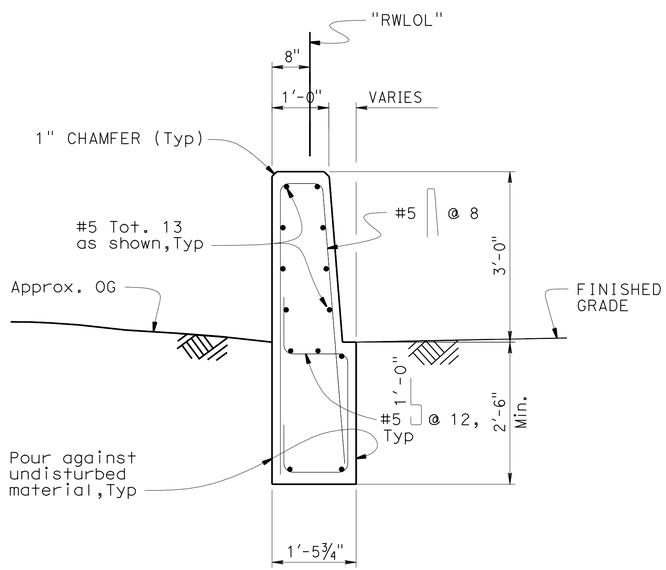

SECTION A-A

3/4" = 1'-0"

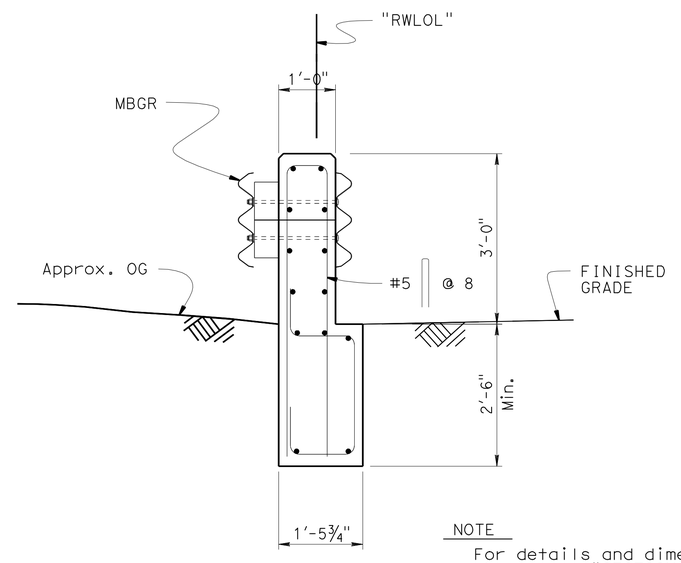

NOTE

For details and dimensions not shown, see "SECTION A-A".

SECTION B-B

3/4" = 1'-0"

NOTE:
THE CONTRACTOR SHALL VERIFY ALL CONTROLLING FIELD DIMENSIONS BEFORE ORDERING OR FABRICATING ANY MATERIAL.

	BY	CHECKED
DESIGN	Tung Ha	Linan Wang
DETAILS	Jeff Thorne	Linan Wang
QUANTITIES	Tuong Ha	Linan Wang

STATE OF CALIFORNIA
DEPARTMENT OF TRANSPORTATION

DIVISION OF ENGINEERING SERVICES
STRUCTURE DESIGN
DESIGN BRANCH 4

BRIDGE NO. 33E-0219
POST MILE 5.37

RETAINING WALL NO. 2
MISCELLANEOUS DETAILS NO. 2

STRUCTURES DESIGN DETAIL SHEET (ENGLISH) (REV. 09-01-10)

ORIGINAL SCALE IN INCHES FOR REDUCED PLANS 0 1 2 3

UNIT: 3579
PROJECT NUMBER & PHASE: 04120005280
CONTRACT NO.: 04-4G1001

DISREGARD PRINTS BEARING EARLIER REVISION DATES

REVISION DATES: 04-17-12 04-18-12

SHEET 11 OF 19

FILE => 33e0219-u-miscdt02.dgn

USERNAME => s124496 DATE PLOTTED => 02-JUL-2012 TIME PLOTTED => 13:33

DIST	COUNTY	ROUTE	POST MILES TOTAL PROJECT	SHEET No.	TOTAL SHEETS
04	Ala	680	M3.6/R6.5	140	163

M. Momenzadeh. 4-27-12
REGISTERED PROFESSIONAL ENGINEER DATE

6-18-12
PLANS APPROVAL DATE

REGISTERED PROFESSIONAL ENGINEER
Mahmood Momenzadeh
No. GE2685
Exp. 12-31-13
Geotechnical
STATE OF CALIFORNIA

The State of California or its officers or agents shall not be responsible for the accuracy or completeness of electronic copies of this plan sheet.

This LOTB sheet was prepared in accordance with the Caltrans Soil & Rock Logging, Classification, & Presentation Manual (2010 Edition).

BENCH MARK

500572, PK/CT shiner on Island
72' Lt Sta 453+36.0 "WR1" Line
N: 2019111.814000
E: 6144431.213000
Elev 183.406'
NAVD88

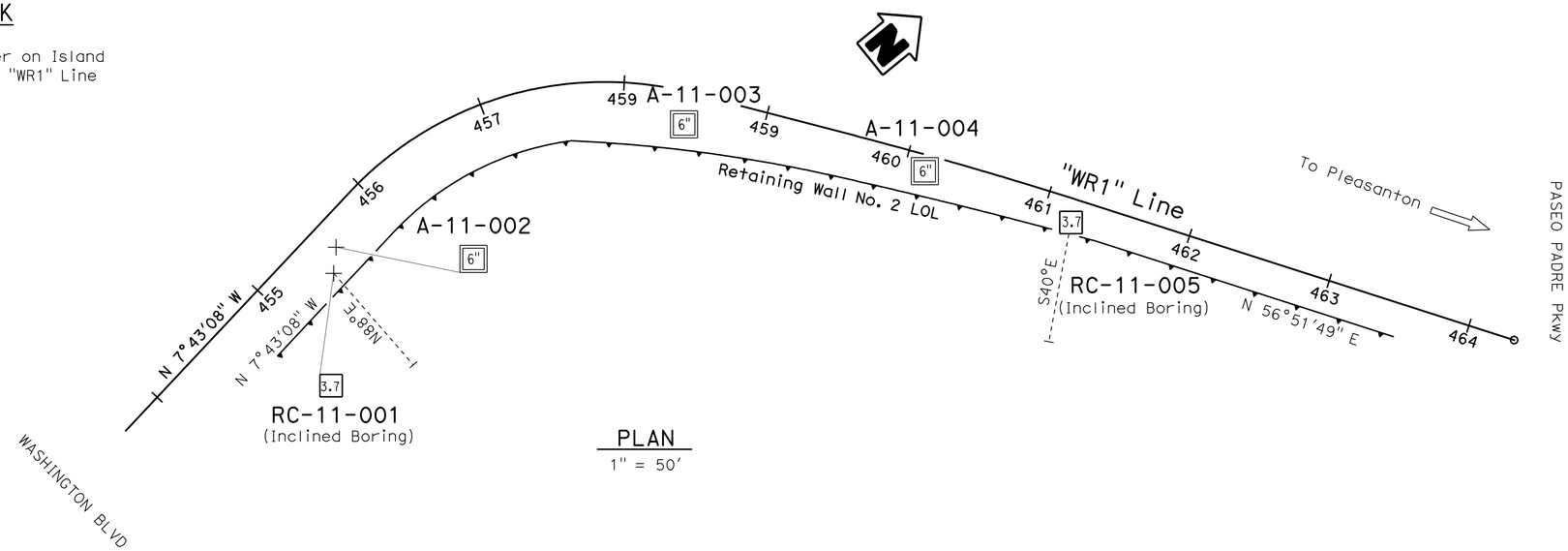

PLAN
1" = 50'

Note: No ground water encountered in Boring RC-11-001.

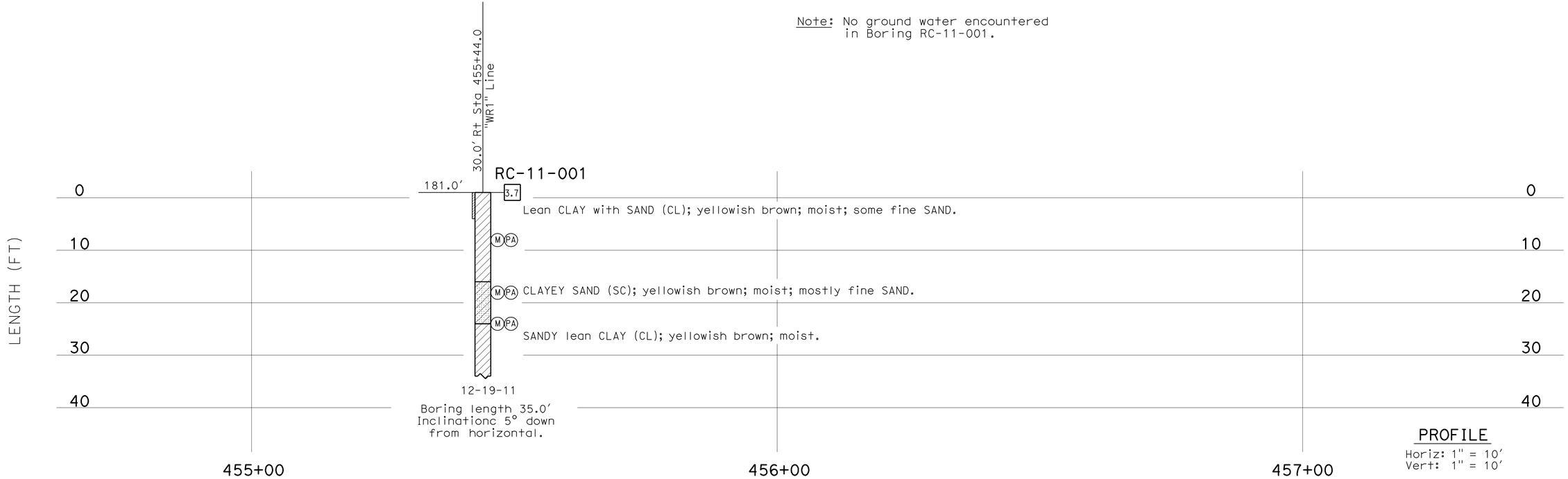

PROFILE
Horiz: 1" = 10'
Vert: 1" = 10'

ENGINEERING SERVICES	MATERIALS AND GEOTECHNICAL SERVICES	STATE OF CALIFORNIA DEPARTMENT OF TRANSPORTATION	DIVISION OF ENGINEERING SERVICES STRUCTURE DESIGN DESIGN BRANCH 4	BRIDGE NO. 33E0219 POST MILE M3.6/R6.5	RETAINING WALL NO. 2 LOG OF TEST BORINGS 1 OF 8
FUNCTIONAL SUPERVISOR NAME: T. Pokrywka	DRAWN BY: F. Nguyen CHECKED BY: T. Nguyen	FIELD INVESTIGATION BY: D. Nesbitt/J. Moore			

OGS CIVIL LOG OF TEST BORINGS SHEET

ORIGINAL SCALE IN INCHES FOR REDUCED PLANS 0 1 2 3

UNIT: 3643
PROJECT NUMBER & PHASE: 04120005280 CONTRACT NO.: 04-4G1001

DISREGARD PRINTS BEARING EARLIER REVISION DATES

REVISION DATES: 03-13-12 04-24-12 04-26-12

SHEET 12 OF 19

FILE => 33e0219-z-lotb01of8.dgn

USERNAME => s124196 DATE PLOTTED => 02-JUL-2012 TIME PLOTTED => 13:33

DIST	COUNTY	ROUTE	POST MILES TOTAL PROJECT	SHEET No.	TOTAL SHEETS
04	Ala	680	M3.6/R6.5	141	163

M. Momenzadeh. 4-27-12
REGISTERED PROFESSIONAL ENGINEER DATE

6-18-12
PLANS APPROVAL DATE

REGISTERED PROFESSIONAL ENGINEER
Mahmood Momenzadeh
No. GE2685
Exp. 12-31-13
Geotechnical
STATE OF CALIFORNIA

The State of California or its officers or agents shall not be responsible for the accuracy or completeness of electronic copies of this plan sheet.

This LOTB sheet was prepared in accordance with the Caltrans Soil & Rock Logging, Classification, & Presentation Manual (2010 Edition).

FOR PLAN VIEW, SEE
"LOG OF TEST BORINGS 1 OF 7"

Note: No ground water encountered in Boring A-11-002.

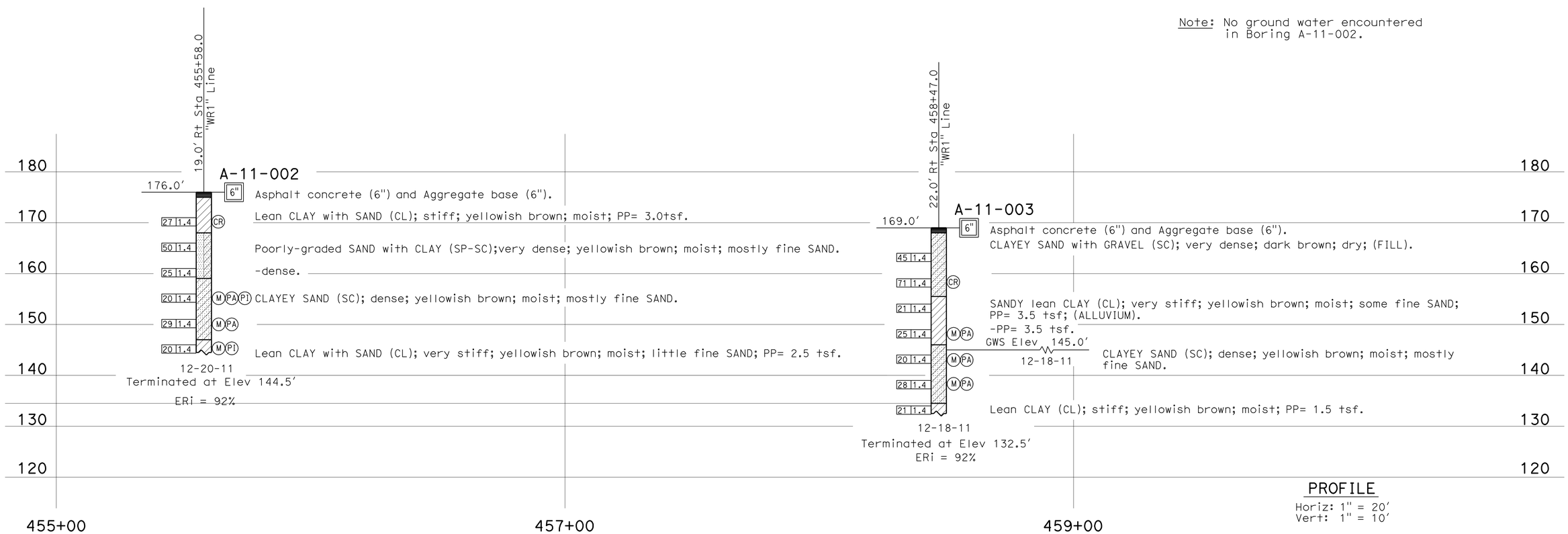

PROFILE
Horiz: 1" = 20'
Vert: 1" = 10'

ENGINEERING SERVICES	MATERIALS AND GEOTECHNICAL SERVICES	STATE OF CALIFORNIA DEPARTMENT OF TRANSPORTATION	DIVISION OF ENGINEERING SERVICES STRUCTURE DESIGN DESIGN BRANCH 4	BRIDGE NO. 33E-0219 POST MILE M3.6/R6.5	RETAINING WALL NO. 2 LOG OF TEST BORINGS 2 OF 8
FUNCTIONAL SUPERVISOR NAME: T. Pokrywka	DRAWN BY: F. Nguyen CHECKED BY: T. Nguyen	FIELD INVESTIGATION BY: D. Nesbitt/J. Moore			

OGS CIVIL LOG OF TEST BORINGS SHEET

ORIGINAL SCALE IN INCHES FOR REDUCED PLANS 0 1 2 3

UNIT: 3643
PROJECT NUMBER & PHASE: 04120005280 CONTRACT NO.: 04-4G1001

DISREGARD PRINTS BEARING EARLIER REVISION DATES → REVISION DATES 03-13-12 04-24-12 04-26-12

SHEET 13 OF 19

FILE => 33e0219-z-lotb02of8.dgn

USERNAME => s124496 DATE PLOTTED => 02-JUL-2012 TIME PLOTTED => 13:33

DIST	COUNTY	ROUTE	POST MILES TOTAL PROJECT	SHEET No.	TOTAL SHEETS
04	Ala	680	M3.6/R6.5	142	163

M. Momenzadeh. 4-27-12
REGISTERED PROFESSIONAL ENGINEER DATE

6-18-12
PLANS APPROVAL DATE

REGISTERED PROFESSIONAL ENGINEER
Mahmood Momenzadeh
No. GE2685
Exp. 12-31-13
Geotechnical
STATE OF CALIFORNIA

The State of California or its officers or agents shall not be responsible for the accuracy or completeness of electronic copies of this plan sheet.

This LOTB sheet was prepared in accordance with the Caltrans Soil & Rock Logging, Classification, & Presentation Manual (2010 Edition).

FOR PLAN VIEW, SEE
"LOG OF TEST BORINGS 1 OF 7"

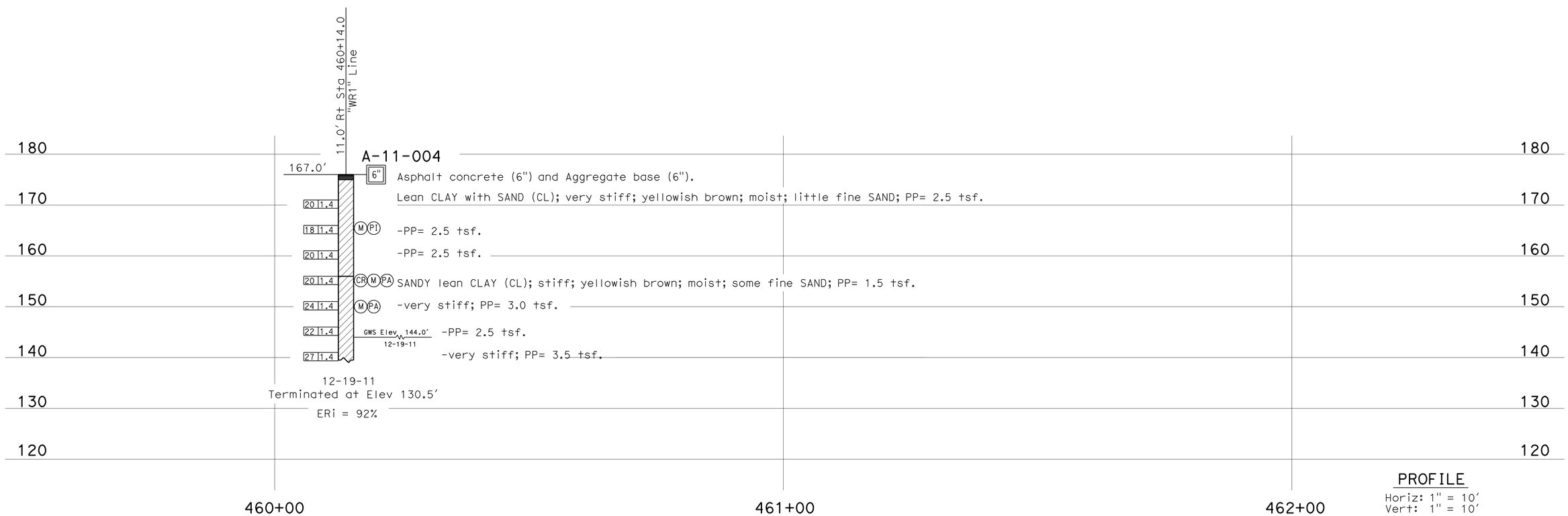

PROFILE
Horiz: 1" = 10'
Vert: 1" = 10'

ENGINEERING SERVICES	MATERIALS AND GEOTECHNICAL SERVICES	STATE OF CALIFORNIA DEPARTMENT OF TRANSPORTATION	DIVISION OF ENGINEERING SERVICES STRUCTURE DESIGN DESIGN BRANCH 4	BRIDGE NO. 33E-0219 POST MILE M3.6/R6.5	RETAINING WALL NO. 2 LOG OF TEST BORINGS 3 OF 8
FUNCTIONAL SUPERVISOR NAME: T. Pokrywka	DRAWN BY: F. Nguyen CHECKED BY: T. Nguyen	FIELD INVESTIGATION BY: D. Nesbitt/J. Moore			

OGS CIVIL LOG OF TEST BORINGS SHEET

ORIGINAL SCALE IN INCHES FOR REDUCED PLANS 0 1 2 3

UNIT: 3643
PROJECT NUMBER & PHASE: 04120005280 CONTRACT NO.: 04-4G1001

DISREGARD PRINTS BEARING EARLIER REVISION DATES → REVISION DATES 03-13-12 04-24-12 04-26-12

SHEET 14 OF 19

FILE => 33e0219-z-lotb03of8.dgn

USERNAME => s124936 DATE PLOTTED => 02-JUL-2012 TIME PLOTTED => 13:33

DIST	COUNTY	ROUTE	POST MILES TOTAL PROJECT	SHEET No.	TOTAL SHEETS
04	Ala	680	M3.6/R6.5	143	163

M. Momenzadeh. 4-27-12
REGISTERED PROFESSIONAL ENGINEER DATE

6-18-12
PLANS APPROVAL DATE

REGISTERED PROFESSIONAL ENGINEER
Mahmood Momenzadeh
No. GE2685
Exp. 12-31-13
Geotechnical
STATE OF CALIFORNIA

The State of California or its officers or agents shall not be responsible for the accuracy or completeness of electronic copies of this plan sheet.

This LOTB sheet was prepared in accordance with the Caltrans Soil & Rock Logging, Classification, & Presentation Manual (2010 Edition).

FOR PLAN VIEW, SEE
"LOG OF TEST BORINGS 1 OF 7"

Note: No ground water encountered in Boring RC-11-005.

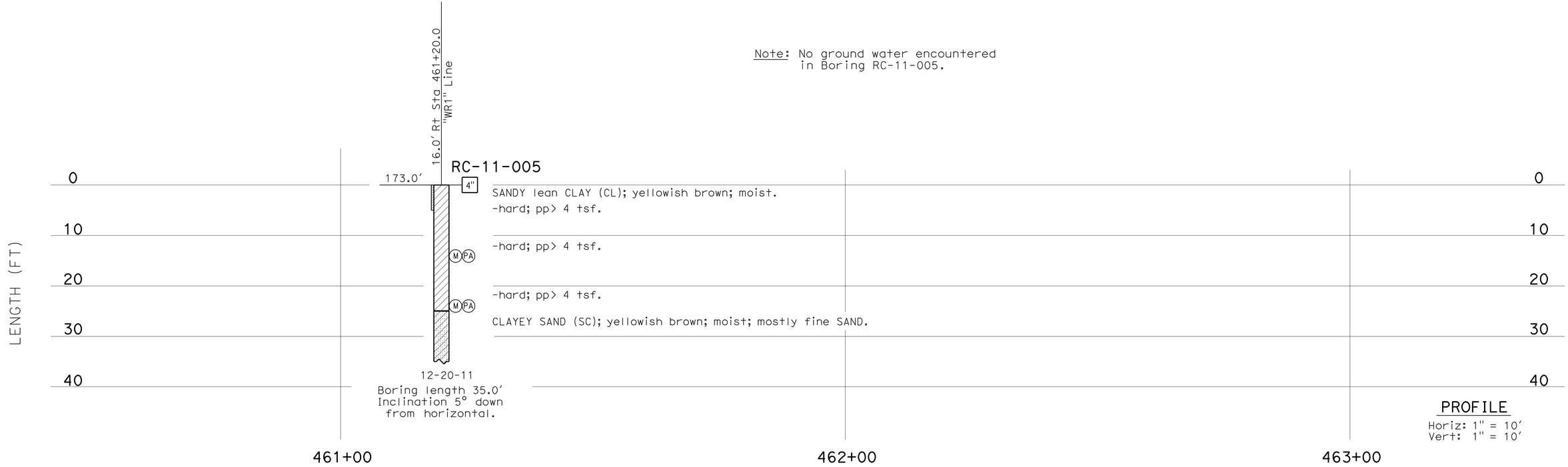

ENGINEERING SERVICES	MATERIALS AND GEOTECHNICAL SERVICES	STATE OF CALIFORNIA DEPARTMENT OF TRANSPORTATION	DIVISION OF ENGINEERING SERVICES STRUCTURE DESIGN DESIGN BRANCH 4	BRIDGE NO. 33E-0219 POST MILE M3.6/R6.5	RETAINING WALL NO. 2 LOG OF TEST BORINGS 4 OF 8
FUNCTIONAL SUPERVISOR NAME: T. Pokrywka	DRAWN BY: F. Nguyen CHECKED BY: T. Nguyen	FIELD INVESTIGATION BY: D. Nesbitt/J. Moore			

OGS CIVIL LOG OF TEST BORINGS SHEET

ORIGINAL SCALE IN INCHES FOR REDUCED PLANS 0 1 2 3

UNIT: 3643
PROJECT NUMBER & PHASE: 04120005280 CONTRACT NO.: 04-4G1001

DISREGARD PRINTS BEARING EARLIER REVISION DATES → REVISION DATES 03-13-12 04-24-12 04-26-12

SHEET 15 OF 19

FILE => 33e0219-z-lotb04of8.dgn

USERNAME => s124496 DATE PLOTTED => 02-JUL-2012 TIME PLOTTED => 13:33

DIST	COUNTY	ROUTE	POST MILES TOTAL PROJECT	SHEET No.	TOTAL SHEETS
04	Ala	680	M3.6/R6.5	144	163

M. Momenzadeh. 4-27-12
REGISTERED PROFESSIONAL ENGINEER DATE

6-18-12
PLANS APPROVAL DATE

REGISTERED PROFESSIONAL ENGINEER Mahmood Momenzadeh No. GE2685 Exp. 12-31-13 Geotechnical STATE OF CALIFORNIA

The State of California or its officers or agents shall not be responsible for the accuracy or completeness of electronic copies of this plan sheet.

REFERENCE: CALTRANS SOIL & ROCK LOGGING, CLASSIFICATION, AND PRESENTATION MANUAL (2010)

CEMENTATION

Description	Criteria
Weak	Crumbles or breaks with handling or little finger pressure.
Moderate	Crumbles or breaks with considerable finger pressure.
Strong	Will not crumble or break with finger pressure.

BOREHOLE IDENTIFICATION

Symbol	Hole Type	Description
Size	A	Auger Boring (hollow or solid stem bucket)
Size	R RW RC P	Rotary drilled boring (conventional) Rotary drilled with self-casing wire-line Rotary core with continuously-sampled, self-casing wire-line Rotary percussion boring (air)
Size	R RC	Rotary drilled diamond core Rotary drilled rock core
Size	HD HA	Hand driven (1-inch soil tube) Hand Auger
●	D	Dynamic Cone Penetration Boring
▲	CPT	Cone Penetration Test (ASTM D 5778)
⬚	O	Other (note on LOTB)

Note: Size in inches.

CONSISTENCY OF COHESIVE SOILS

Description	Shear Strength (tsf)	Pocket Penetrometer Measurement, PP, (tsf)	Torvane Measurement, TV, (tsf)	Vane Shear Measurement, VS, (tsf)
Very Soft	Less than 0.12	Less than 0.25	Less than 0.12	Less than 0.12
Soft	0.12 - 0.25	0.25 - 0.5	0.12 - 0.25	0.12 - 0.25
Medium Stiff	0.25 - 0.5	0.5 - 1	0.25 - 0.5	0.25 - 0.5
Stiff	0.5 - 1	1 - 2	0.5 - 1	0.5 - 1
Very Stiff	1 - 2	2 - 4	1 - 2	1 - 2
Hard	Greater than 2	Greater than 4	Greater than 2	Greater than 2

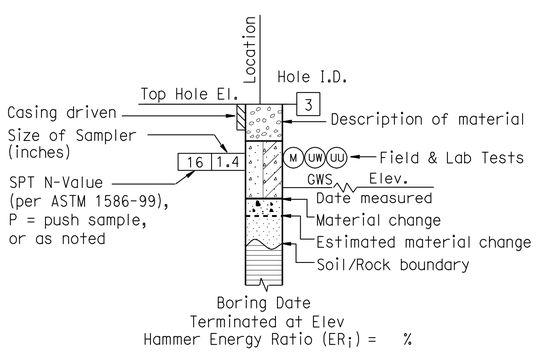

ROTARY BORING

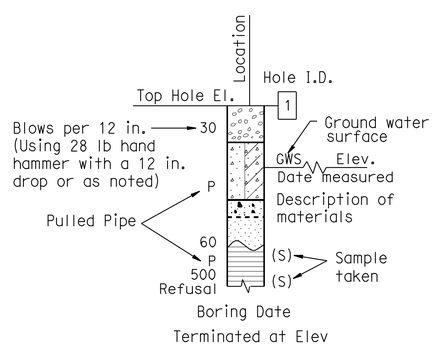

HAND BORING

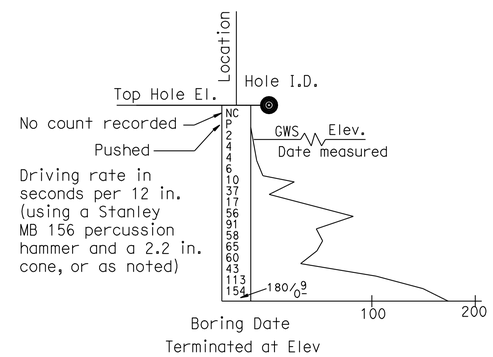

DYNAMIC CONE PENETRATION BORING

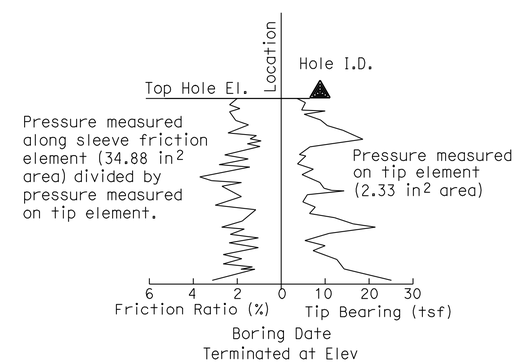

CONE PENETRATION TEST (CPT) BORING

ENGINEERING SERVICES	MATERIALS AND GEOTECHNICAL SERVICES	STATE OF CALIFORNIA DEPARTMENT OF TRANSPORTATION	DIVISION OF ENGINEERING SERVICES STRUCTURE DESIGN DESIGN BRANCH 4	BRIDGE NO. 33E-0219 POST MILE M3.6/R6.5	RETAINING WALL NO. 2 LOG OF TEST BORINGS 5 OF 8
	PREPARED BY: F. Nguyen				

GS LOTB SOIL LEGEND

ORIGINAL SCALE IN INCHES FOR REDUCED PLANS 0 1 2 3

UNIT: 3643
PROJECT NUMBER & PHASE: 04120005280 CONTRACT NO.: 04-4G1001

DISREGARD PRINTS BEARING EARLIER REVISION DATES → REVISION DATES 04-24-12 04-26-12

SHEET 16 OF 19

FILE => 33e0219-z-lotb05of8.dgn

USERNAME => s124496 DATE PLOTTED => 02-JUL-2012 TIME PLOTTED => 13:33

REFERENCE: CALTRANS SOIL & ROCK LOGGING, CLASSIFICATION, AND PRESENTATION MANUAL (2010)

DIST	COUNTY	ROUTE	POST MILES TOTAL PROJECT	SHEET No.	TOTAL SHEETS
04	Ala	680	M3.6/R6.5	145	163

M. Momenzadeh. 4-27-12
REGISTERED PROFESSIONAL ENGINEER DATE

6-18-12
PLANS APPROVAL DATE

REGISTERED PROFESSIONAL ENGINEER Mahmood Momenzadeh No. GE2685 Exp. 12-31-13 Geotechnical STATE OF CALIFORNIA

The State of California or its officers or agents shall not be responsible for the accuracy or completeness of electronic copies of this plan sheet.

GROUP SYMBOLS AND NAMES

Graphic/Symbol	Group Names	Graphic/Symbol	Group Names
GW	Well-graded GRAVEL Well-graded GRAVEL with SAND	CL	Lean CLAY Lean CLAY with SAND Lean CLAY with GRAVEL SANDY lean CLAY SANDY lean CLAY with GRAVEL GRAVELLY lean CLAY GRAVELLY lean CLAY with SAND
GP	Poorly-graded GRAVEL Poorly-graded GRAVEL with SAND		
GW-GM	Well-graded GRAVEL with SILT Well-graded GRAVEL with SILT and SAND	CL-ML	SILTY CLAY SILTY CLAY with SAND SILTY CLAY with GRAVEL SANDY SILTY CLAY SANDY SILTY CLAY with GRAVEL GRAVELLY SILTY CLAY GRAVELLY SILTY CLAY with SAND
GW-GC	Well-graded GRAVEL with CLAY (or SILTY CLAY) Well-graded GRAVEL with CLAY and SAND (or SILTY CLAY and SAND)		
GP-GM	Poorly-graded GRAVEL with SILT Poorly-graded GRAVEL with SILT and SAND	ML	SILT SILT with SAND SILT with GRAVEL SANDY SILT SANDY SILT with GRAVEL GRAVELLY SILT GRAVELLY SILT with SAND
GP-GC	Poorly-graded GRAVEL with CLAY (or SILTY CLAY) Poorly-graded GRAVEL with CLAY and SAND (or SILTY CLAY and SAND)		
GM	SILTY GRAVEL SILTY GRAVEL with SAND	OL	ORGANIC lean CLAY ORGANIC lean CLAY with SAND ORGANIC lean CLAY with GRAVEL SANDY ORGANIC lean CLAY SANDY ORGANIC lean CLAY with GRAVEL GRAVELLY ORGANIC lean CLAY GRAVELLY ORGANIC lean CLAY with SAND
GC	CLAYEY GRAVEL CLAYEY GRAVEL with SAND		
GC-GM	SILTY, CLAYEY GRAVEL SILTY, CLAYEY GRAVEL with SAND	OL	ORGANIC SILT ORGANIC SILT with SAND ORGANIC SILT with GRAVEL SANDY ORGANIC SILT SANDY ORGANIC SILT with GRAVEL GRAVELLY ORGANIC SILT GRAVELLY ORGANIC SILT with SAND
SW	Well-graded SAND Well-graded SAND with GRAVEL		
SP	Poorly-graded SAND Poorly-graded SAND with GRAVEL	CH	Fat CLAY Fat CLAY with SAND Fat CLAY with GRAVEL SANDY fat CLAY SANDY fat CLAY with GRAVEL GRAVELLY fat CLAY GRAVELLY fat CLAY with SAND
SW-SM	Well-graded SAND with SILT Well-graded SAND with SILT and GRAVEL		
SW-SC	Well-graded SAND with CLAY (or SILTY CLAY) Well-graded SAND with CLAY and GRAVEL (or SILTY CLAY and GRAVEL)	MH	Elastic SILT Elastic SILT with SAND Elastic SILT with GRAVEL SANDY elastic SILT SANDY elastic SILT with GRAVEL GRAVELLY elastic SILT GRAVELLY elastic SILT with SAND
SP-SM	Poorly-graded SAND with SILT Poorly-graded SAND with SILT and GRAVEL		
SP-SC	Poorly-graded SAND with CLAY (or SILTY CLAY) Poorly-graded SAND with CLAY and GRAVEL (or SILTY CLAY and GRAVEL)	OH	ORGANIC fat CLAY ORGANIC fat CLAY with SAND ORGANIC fat CLAY with GRAVEL SANDY ORGANIC fat CLAY SANDY ORGANIC fat CLAY with GRAVEL GRAVELLY ORGANIC fat CLAY GRAVELLY ORGANIC fat CLAY with SAND
SM	SILTY SAND SILTY SAND with GRAVEL		
SC	CLAYEY SAND CLAYEY SAND with GRAVEL	OH	ORGANIC elastic SILT ORGANIC elastic SILT with SAND ORGANIC elastic SILT with GRAVEL SANDY ORGANIC elastic SILT SANDY ORGANIC elastic SILT with GRAVEL GRAVELLY ORGANIC elastic SILT GRAVELLY ORGANIC elastic SILT with SAND
SC-SM	SILTY, CLAYEY SAND SILTY, CLAYEY SAND with GRAVEL		
PT	PEAT	OL/OH	ORGANIC SOIL ORGANIC SOIL with SAND ORGANIC SOIL with GRAVEL SANDY ORGANIC SOIL SANDY ORGANIC SOIL with GRAVEL GRAVELLY ORGANIC SOIL GRAVELLY ORGANIC SOIL with SAND
	COBBLES COBBLES and BOULDERS BOULDERS		

FIELD AND LABORATORY TESTING

- (C) Consolidation (ASTM D 2435)
- (CL) Collapse Potential (ASTM D 5333)
- (CP) Compaction Curve (CTM 216)
- (CR) Corrosivity Testing (CTM 643, CTM 422, CTM 417)
- (CU) Consolidated Undrained Triaxial (ASTM D 4767)
- (DS) Direct Shear (ASTM D 3080)
- (EI) Expansion Index (ASTM D 4829)
- (M) Moisture Content (ASTM D 2216)
- (OC) Organic Content-% (ASTM D 2974)
- (P) Permeability (CTM 220)
- (PA) Particle Size Analysis (ASTM D 422)
- (PI) Plasticity Index (AASHTO T 90) Liquid Limit (AASHTO T 89)
- (PL) Point Load Index (ASTM D 5731)
- (PM) Pressure Meter
- (R) R-Value (CTM 301)
- (SE) Sand Equivalent (CTM 217)
- (SG) Specific Gravity (AASHTO T 100)
- (SL) Shrinkage Limit (ASTM D 427)
- (SW) Swell Potential (ASTM D 4546)
- (UC) Unconfined Compression-Soil (ASTM D 2166) Unconfined Compression-Rock (ASTM D 2938)
- (UU) Unconsolidated Undrained Triaxial (ASTM D 2850)
- (UW) Unit Weight (ASTM D 4767)

APPARENT DENSITY OF COHESIONLESS SOILS

Description	SPT N_{60} (Blows / 12 in.)
Very Loose	0 - 5
Loose	5 - 10
Medium Dense	10 - 30
Dense	30 - 50
Very Dense	Greater than 50

MOISTURE

Description	Criteria
Dry	No discernable moisture
Moist	Moisture present, but no free water
Wet	Visible free water

PERCENT OR PROPORTION OF SOILS

Description	Criteria
Trace	Particles are present but estimated to be less than 5%
Few	5% - 10%
Little	15% - 25%
Some	30% - 45%
Mostly	50% - 100%

PARTICLE SIZE

Description		Size (in.)
Boulder		Greater than 12
Cobble		3 - 12
Gravel	Coarse	3/4 - 3
	Fine	1/5 - 3/4
Sand	Coarse	1/16 - 1/5
	Medium	1/64 - 1/16
	Fine	1/300 - 1/64
Silt and Clay		Less than 1/300

ENGINEERING SERVICES

MATERIALS AND GEOTECHNICAL SERVICES

PREPARED BY: F. Nguyen

STATE OF CALIFORNIA DEPARTMENT OF TRANSPORTATION

DIVISION OF ENGINEERING SERVICES STRUCTURE DESIGN DESIGN BRANCH 4

BRIDGE NO. 33E-0219

POST MILE M3.6/R6.5

RETAINING WALL NO. 2

LOG OF TEST BORINGS 6 OF 8

GS LOTB SOIL LEGEND

ORIGINAL SCALE IN INCHES FOR REDUCED PLANS 0 1 2 3

UNIT: 3643
PROJECT NUMBER & PHASE: 04120005280
CONTRACT NO.: 04-4G1001

DISREGARD PRINTS BEARING EARLIER REVISION DATES

REVISION DATES: 04-24-12 04-26-12

SHEET 17 OF 19

FILE => 33e0219-z-lotb06of8.dgn

USERNAME => s124096 DATE PLOTTED => 02-JUL-2012 TIME PLOTTED => 13:33

Exist Rte 17 near Warm Sps to
Jct Exist Rte 238

(Old 4-Ala-108-Fmt)

FED. ROAD DIV. NO.	STATE	F.A. PROJECT No.	SHEET No.	TOTAL SHEETS
7	CALIF.			

DIST.	COUNTY	ROUTE	SECTION	SHEET No.	TOTAL SHEETS
04	SCL ALA	680	W.P. R6.0	355	363

DATE APPROVED April 22, 1968

DIVISION OF ENGINEERING SERVICES - MATERIALS AND GEOTECHNICAL SERVICES

As-Built Log of Test Borings sheet is considered an informational document only. As such, the State of California registration seal with signature, license number and registration certificate expiration date confirm that this is a true and accurate copy of the original document. It does not attest to the accuracy or validity of the information contained in the original document. This drawing is available and presented only for the convenience of any bidder, contractor or other interested party.

REGISTERED PROFESSIONAL ENGINEER — Mahmood Momenzadeh — No. GE2685 — Exp. 12-31-13 — GEOTECHNICAL — STATE OF CALIFORNIA

DIST.	COUNTY	ROUTE	POST MILE-TOTAL PROJECT	Sheet No.	Total Sheets
04	Ala	680	M3.6/R6.5	146	163

M. Momenzadeh 4-27-12
REGISTERED GEOTECHNICAL ENGINEER — DATE

RETAINING WALL NO. 2
LOG OF TEST BORINGS 7 OF 8

UNIT: 3643	CONTRACT No.	BRIDGE No.
PROJ. No. & PHASE: 04120005280	04-4G1001	

AS-BUILT VERT DATUM: CONVERSION: — Sheet 18 of 19

NOTE: A COPY OF THIS LOG OF TEST BORINGS IS AVAILABLE AT OFFICE OF STRUCTURE MAINTENANCE AND INVESTIGATIONS, SACRAMENTO, CALIFORNIA

TO ACCOMPANY PLANS DATED 6-18-12

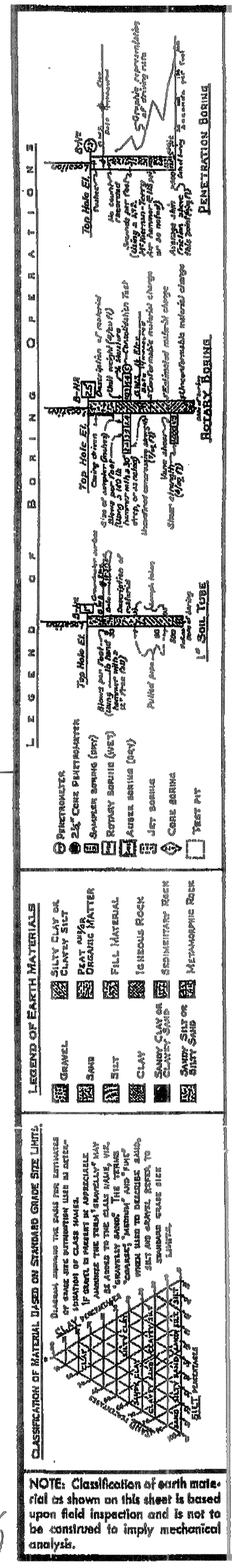

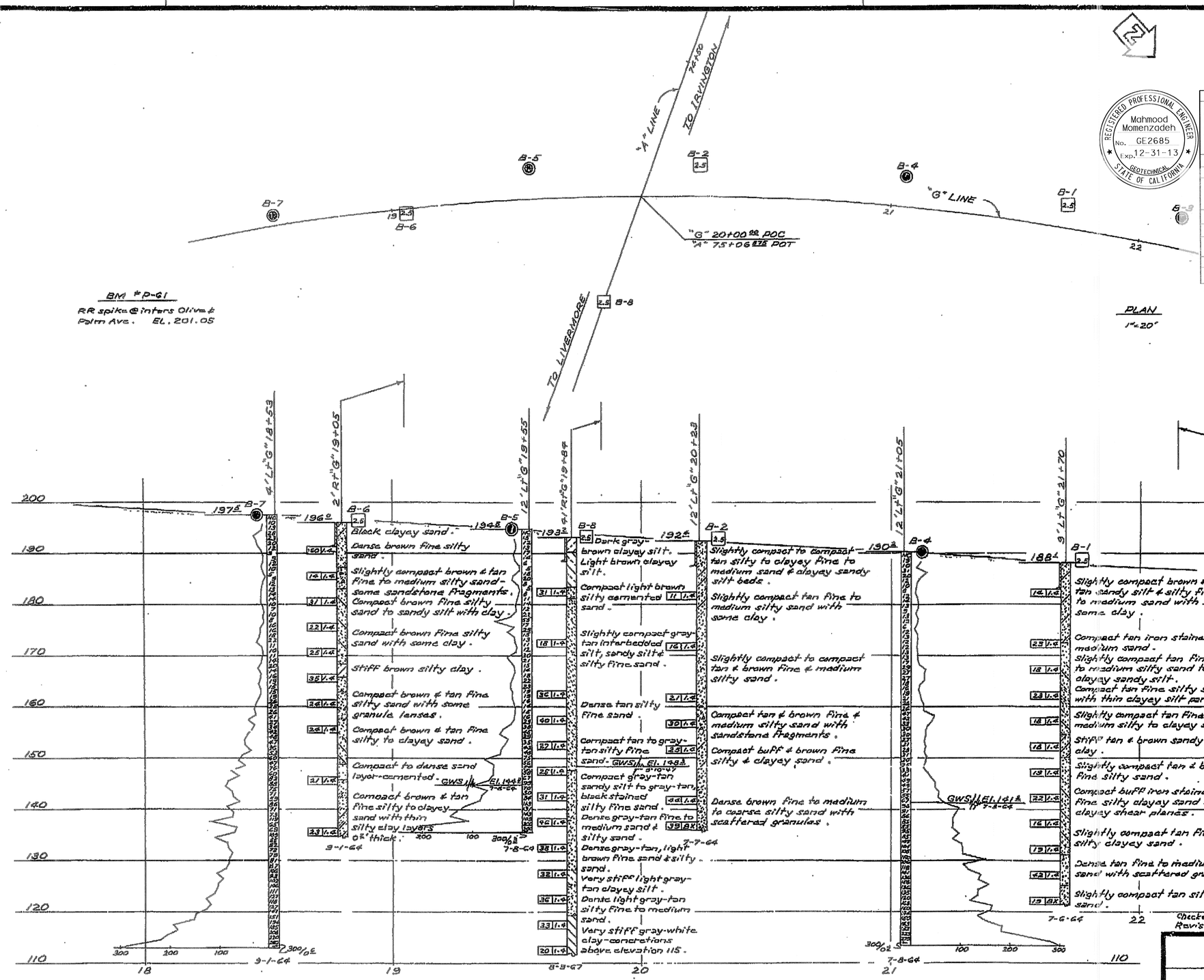

...ON ACTUAL FOUNDATION
...COUNTERED IS ON FILE
IN BRIDGE GEOLOGY SECTION

Checked - 8-18-67 G.M.
Revised - 8-16-67 KE Added "B-8"

SHEET	OF
18	19

STATE OF CALIFORNIA
DEPARTMENT OF PUBLIC WORKS
DIVISION OF HIGHWAYS

PASEO PADRE PARKWAY OVERCROSSING

LOG OF TEST BORINGS

SCALE As Noted	BRIDGE 33-405	FILE	DRAWING 33405-13

FIELD STUDY	By T. Pull	8-24-64
DRAWN	By K. Gordon	9-24-64
CHECKED	By J. Pull	10-27-64

Approval Recommended By Bridge Geologist

BRIDGE DEPARTMENT
ENGINEERING GEOLOGY SECTION

355

AS BUILT PLANS
Contract No. 04-119504
Date Completed
Document No. 4/0003891

Disregard prints bearing earlier numbers → PREL. DRAWING No. PR- 11/1/67

FILENAME => 33e0219-z-1tb07of8.tif

DIST.	COUNTY	ROUTE	POST MILES—TOTAL PROJECT	SHEET NO.	TOTAL SHEETS
04	Ala	680	M7.2/R6.8	342	363

BRIDGE ENGINEER: REGISTERED CIVIL ENGINEER NO. 6552

DATE APPROVED April 22, 1968

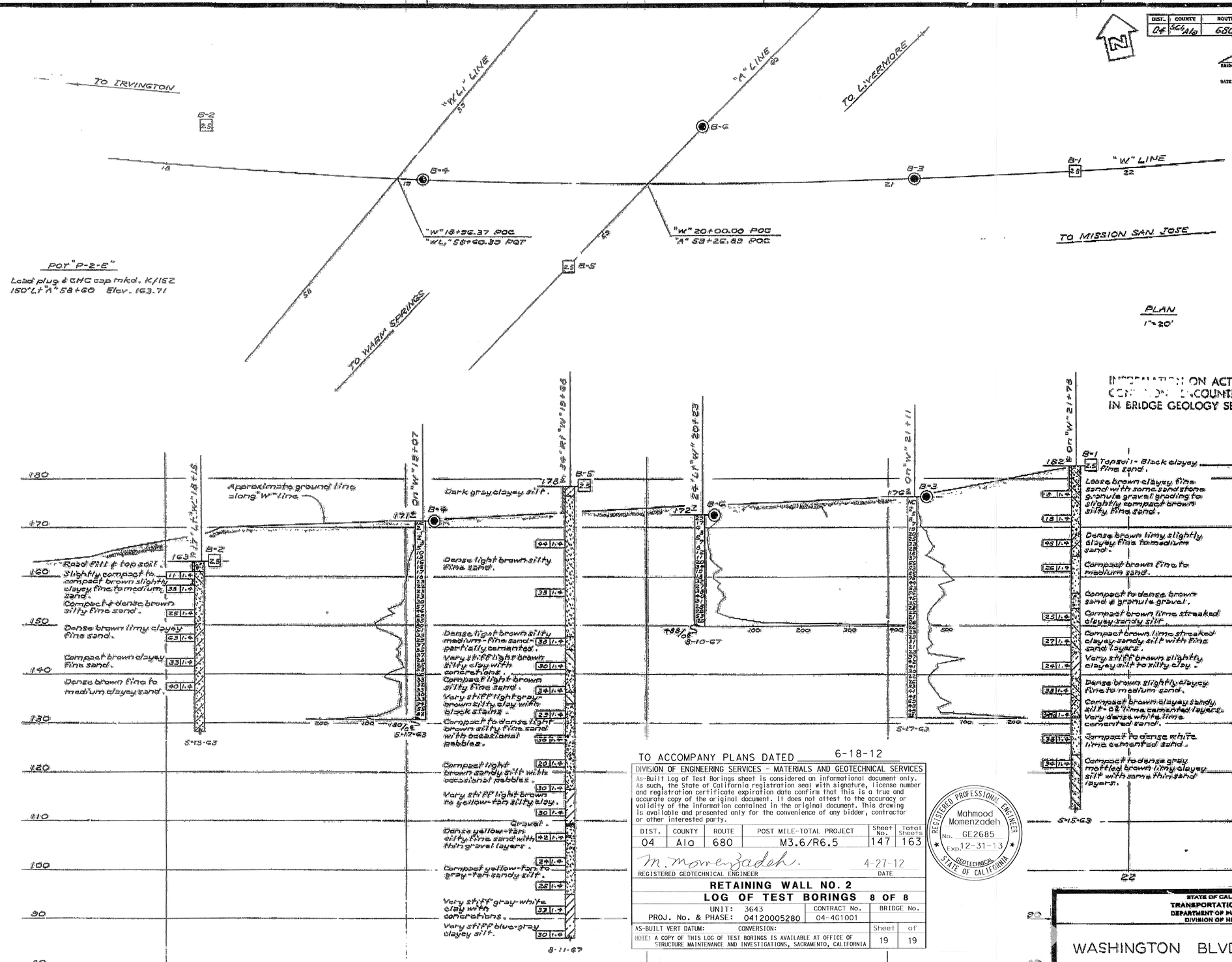

TO ACCOMPANY PLANS DATED 6-18-12

DIVISION OF ENGINEERING SERVICES - MATERIALS AND GEOTECHNICAL SERVICES

As-Built Log of Test Borings sheet is considered an informational document only. As such, the State of California registration seal with signature, license number and registration certificate expiration date confirm that this is a true and accurate copy of the original document. It does not attest to the accuracy or validity of the information contained in the original document. This drawing is available and presented only for the convenience of any bidder, contractor or other interested party.

DIST.	COUNTY	ROUTE	POST MILE-TOTAL PROJECT	Sheet No.	Total Sheets
04	Ala	680	M3.6/R6.5	147	163

M. Momenzadeh. 4-27-12

REGISTERED GEOTECHNICAL ENGINEER — DATE

REGISTERED PROFESSIONAL ENGINEER — Mahmood Momenzadeh — No. GE2685 — Exp. 12-31-13 — GEOTECHNICAL — STATE OF CALIFORNIA

RETAINING WALL NO. 2

LOG OF TEST BORINGS 8 OF 8

UNIT: 3643	CONTRACT No.	BRIDGE No.
PROJ. No. & PHASE: 04120005280	04-4G1001	

AS-BUILT VERT DATUM: CONVERSION: Sheet 19 of 19

NOTE: A COPY OF THIS LOG OF TEST BORINGS IS AVAILABLE AT OFFICE OF STRUCTURE MAINTENANCE AND INVESTIGATIONS, SACRAMENTO, CALIFORNIA

STATE OF CALIFORNIA
TRANSPORTATION AGENCY
DEPARTMENT OF PUBLIC WORKS
DIVISION OF HIGHWAYS

WASHINGTON BLVD OVERCROSSING

LOG OF TEST BORINGS

BRIDGE NO.	POST MILE	DRAWING NO.	SHEET	OF
33-361		33361-14	13	13

REVISION DATES (PRELIMINARY STAGE ONLY): 5/24/67

WO 719501
CU 04204
PR-33361-5

Disregard prints bearing earlier revision dates

LEGEND OF BORING OPERATIONS

LEGEND OF EARTH MATERIALS

CLASSIFICATION OF MATERIAL BASED ON STANDARD GRADE SIZE LIMITS

NOTE: Classification of earth material as shown on this sheet is based upon field inspection and is not to be construed to imply mechanical analysis.

BRIDGE DEPARTMENT
ENGINEERING GEOLOGY SECTION

AS BUILT PLANS
Contract No. 04-119504
Date Completed

342

FILENAME => 33e0219-z-ltb08of8.tif

DIST	COUNTY	ROUTE	POST MILES TOTAL PROJECT	SHEET No.	TOTAL SHEETS
04	Ala	680	M3.6/R6.5	148	163

REGISTERED CIVIL ENGINEER 4-20-12 DATE

6-18-12
PLANS APPROVAL DATE

REGISTERED PROFESSIONAL ENGINEER LINAN WANG No. C54714 Exp. 12-31-13 CIVIL STATE OF CALIFORNIA

THE STATE OF CALIFORNIA OR ITS OFFICERS OR AGENTS SHALL NOT BE RESPONSIBLE FOR THE ACCURACY OR COMPLETENESS OF ELECTRONIC COPIES OF THIS PLAN SHEET.

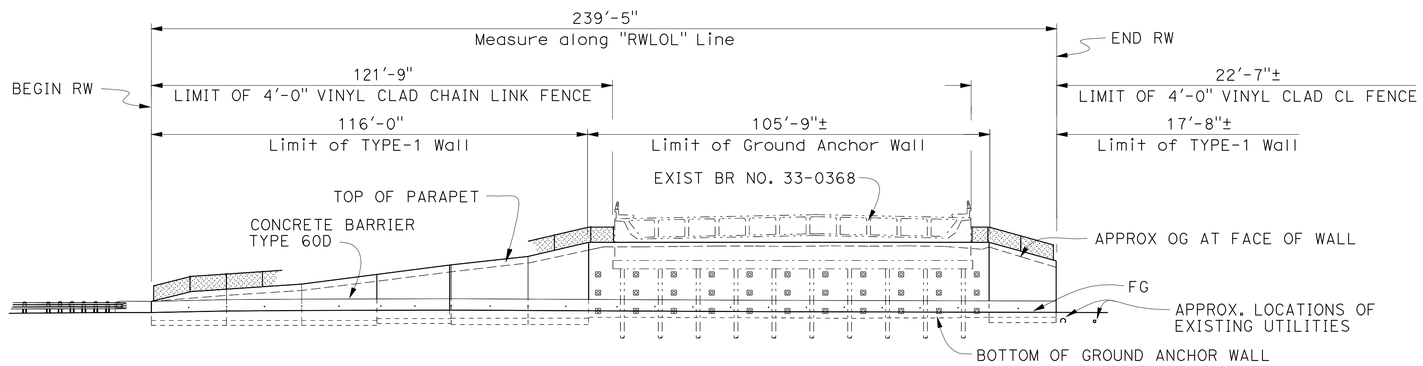

DATUM ELEV = 20.00 10+00 11+00 12+00

MIRROR ELEVATION

1" = 20'

A76A B0-3 B3-9 B11-56

QUANTITIES

STRUCTURE EXCAVATION (RETAINING WALL)	855	CY
STRUCTURE EXCAVATION (GROUND ANCHOR WALL)	243	CY
STRUCTURE BACKFILL (RETAINING WALL)	532	CY
STRUCTURE BACKFILL (GROUND ANCHOR WALL)	59	CY
LEAN CONCRETE BACKFILL	5	CY
GROUND ANCHOR (SUBHORIZONTAL)	33	EA
STRUCTURAL CONCRETE, GROUND ANCHOR WALL	56	CY
STRUCTURAL CONCRETE, RETAINING WALL	133	CY
ARCHITECTURAL TREATMENT	2,739	SQFT
BAR REINFORCING STEEL (RETAINING WALL)	17,090	LB
BAR REINFORCING STEEL (GROUND ANCHOR WALL)	27,474	LB
SHOTCRETE	54	CY
MINOR CONCRETE (GUTTER) (LF)	222	LF
CHAIN LINK FENCE (TYPE CL-4, VINYL-CLAD)	145	LF
CONCRETE BARRIER (TYPE 60D)	222	LF
CONCRETE BARRIER (TYPE 736 MODIFIED)	10	LF

INDEX TO PLANS

SHEET NO.	TITLE
1.	GENERAL PLAN NO.1
2.	GENERAL PLAN NO.2
3.	STRUCTURE PLAN
4.	GROUND ANCHOR DETAIILS NO.1
5.	GROUND ANCHOR DETAIILS NO.2
6.	GROUND ANCHOR DETAIILS NO.3
7.	GROUND ANCHOR DETAIILS NO.4
8.	ARCHITECTURAL TREATMENT DETAILS NO.1
9.	ARCHITECTURAL TREATMENT DETAILS NO.2
10.	ARCHITECTURAL TREATMENT DETAILS NO.3
11.	GROUND ANCHOR WALL DRAIN DETAILS
12.	MISCELLANEOUS DETAILS
13.	LOG OF TEST BORINGS 1 OF 4
14.	LOG OF TEST BORINGS 2 OF 4
15.	LOG OF TEST BORINGS 3 OF 4
16.	LOG OF TEST BORINGS 4 OF 4

STANDARD PLANS 2006

SHEET NO.	TITLE
A10A	ACRONYMS AND ABBREVIATIONS (SHEET 1 OF 2)
A10B	ACRONYMS AND ABBREVIATIONS (SHEET 2 OF 2)
A10C	SYMBOLS (SHEET 1 OF 2)
A62B	LIMITS OF PAYMENT FOR EXCAVATION AND BACKFILL - BRIDGE SURCHARGE AND WALL
A76A	CONCRETE BARRIER TYPE 60
A85	CHAIN LINK FENCE
B0-3	BRIDGE DETAILS
B3-1	RETAINING WALL TYPE-1 H=4' THROUGH 30'
B3-8	RETAINING WALL DETAILS NO. 1
B3-9	RETAINING WALL DETAILS NO. 2
B11-56	CONCRETE BARRIER TYPE 736

STANDARD PLAN SHEET NO.

DETAIL NO.

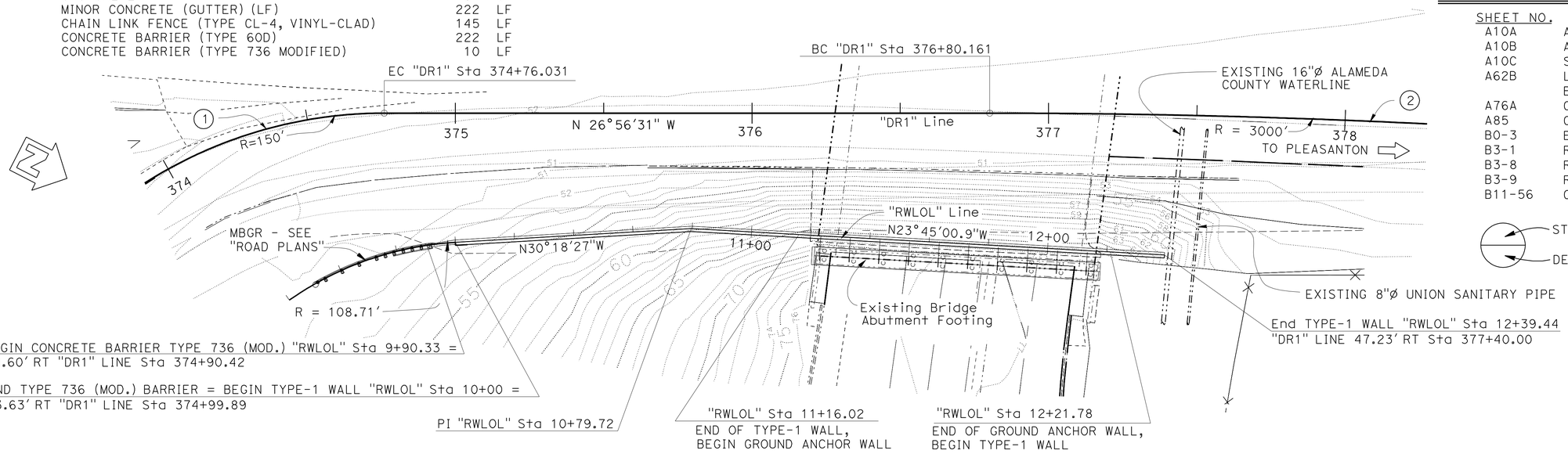

"DR1" LINE CURVE DATA

No.	R	Δ	T	L
1	150.000'	114°40'38"	234'	300.22'
2	3000.000'	3°11'30"	83.58'	167.11'

PLAN

1" = 20'

NOTE:
THE CONTRACTOR SHALL VERIFY ALL CONTROLLING FIELD DIMENSIONS BEFORE ORDERING OR FABRICATING ANY MATERIAL.

NOTE:
"GROUND ANCHOR WALL TYPICAL SECTION" and "TYPE-1 WALL TYPICAL SECTION" see "GENERAL PLAN NO.2" sheet.

Minh Ha, DESIGN ENGINEER	DESIGN	BY Sergio Damian	CHECKED Linan Wang	LOAD & RESISTANCE FACTOR DESIGN
	DETAILS	BY Wei Zhang / A. Onodera	CHECKED Linan Wang	LAYOUT BY CHECKED
	QUANTITIES	BY Sergio Damian	CHECKED Linan Wang	SPECIFICATIONS BY PLANS AND SPECS COMPARED

STATE OF CALIFORNIA DEPARTMENT OF TRANSPORTATION

DIVISION OF ENGINEERING SERVICES STRUCTURE DESIGN DESIGN BRANCH 4

BRIDGE NO. 33E-0220 POST MILE 4.82

RETAINING WALL NO. 1
GENERAL PLAN NO.1

ORIGINAL SCALE IN INCHES FOR REDUCED PLANS 0 1 2 3

UNIT: 3579
PROJECT NUMBER & PHASE: 04120005280 CONTRACT NO.: 04-4G1001

DISREGARD PRINTS BEARING EARLIER REVISION DATES

REVISION DATES 07-19-11 04-26-12 02-29-12 04-18-12 SHEET 1 OF 16

STRUCTURES DESIGN GENERAL PLAN SHEET (ENGLISH) (REV.09-01-10)

FILE => 33e0220-a-gp01.dgn

USERNAME => s114640 DATE PLOTTED => 06-JUL-2012 TIME PLOTTED => 13:25

DIST	COUNTY	ROUTE	POST MILES TOTAL PROJECT	SHEET No.	TOTAL SHEETS
04	Ala	680	M3.6/R6.5	149	163

REGISTERED CIVIL ENGINEER 4-20-12 DATE

6-18-12
PLANS APPROVAL DATE

REGISTERED PROFESSIONAL ENGINEER LINAN WANG No. C54714 Exp 12-31-13 CIVIL STATE OF CALIFORNIA

THE STATE OF CALIFORNIA OR ITS OFFICERS OR AGENTS SHALL NOT BE RESPONSIBLE FOR THE ACCURACY OR COMPLETENESS OF ELECTRONIC COPIES OF THIS PLAN SHEET.

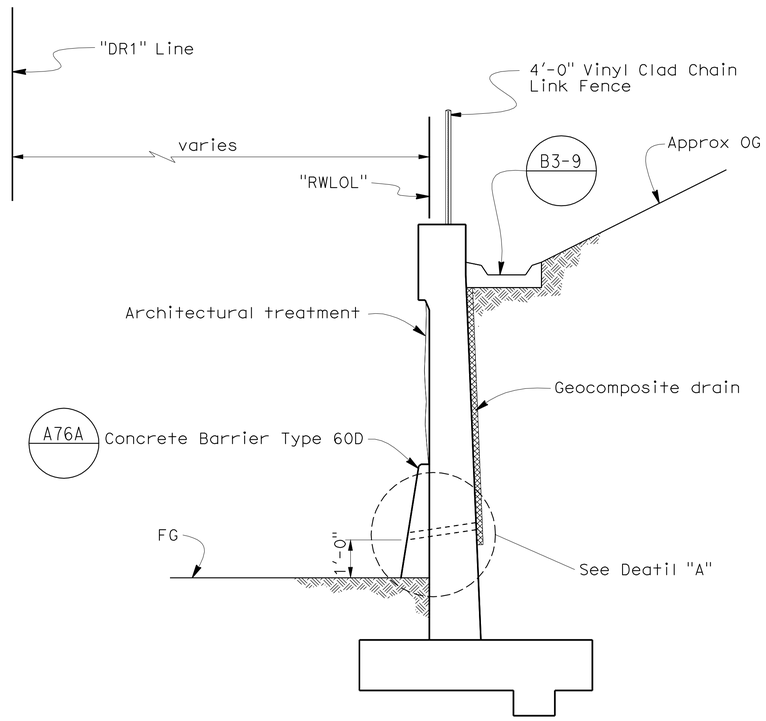

RETAINING WALL TYPE-1
TYPICAL SECTION
B3-1
½" = 1'-0"

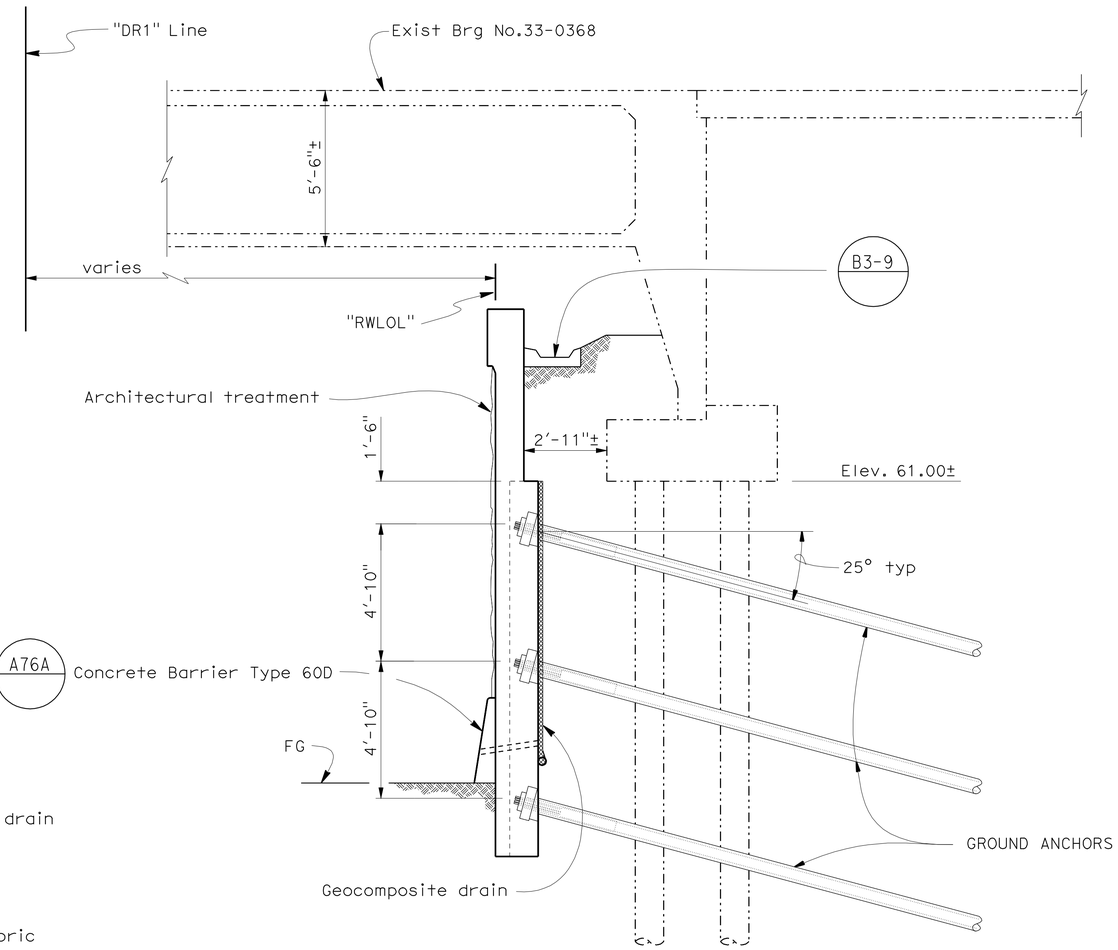

GROUND ANCHOR WALL
TYPICAL SECTION
⅜" = 1'-0"

NOTE:
For details of Drainage of Ground Anchor Wall, see "GROUND ANCHOR WALL DRAIN DETAILS" sheet.

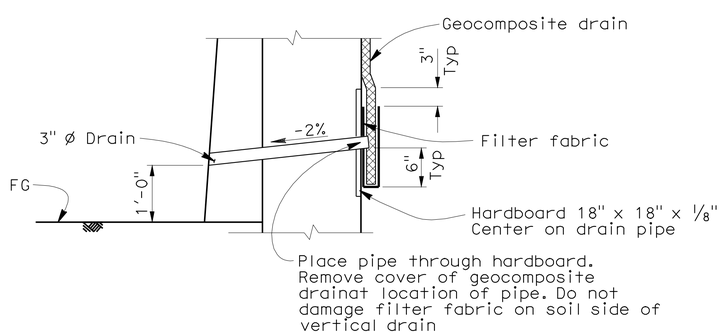

DETAIL "A"
No Scale

NOTE:
THE CONTRACTOR SHALL VERIFY ALL CONTROLLING FIELD DIMENSIONS BEFORE ORDERING OR FABRICATING ANY MATERIAL.

Minh Ha
DESIGN ENGINEER

	BY	CHECKED
DESIGN	Sergio Damian	Linan Wang
DETAILS	Wei Zhang	Linan Wang
QUANTITIES	Sergio Damian	Linan Wang

LOAD & RESISTANCE FACTOR DESIGN — LIVE LOADING: HL93 W/"LOW-BOY"; PERMIT DESIGN VEHICLE
LAYOUT — BY — CHECKED
SPECIFICATIONS — BY — PLANS AND SPECS COMPARED

ORIGINAL SCALE IN INCHES FOR REDUCED PLANS 0 1 2 3

STATE OF CALIFORNIA
DEPARTMENT OF TRANSPORTATION

DIVISION OF ENGINEERING SERVICES
STRUCTURE DESIGN
DESIGN BRANCH 4

BRIDGE NO. 33E-0220
POST MILE 4.82

RETAINING WALL NO. 1
GENERAL PLAN NO.2

UNIT: 3579
PROJECT NUMBER & PHASE: 04120005280
CONTRACT NO.: 04-4G1001

DISREGARD PRINTS BEARING EARLIER REVISION DATES
REVISION DATES 01-23-12 04-26-12 02-21-12 04-18-12

SHEET 2 OF 16

USERNAME => s124496 DATE PLOTTED => 02-JUL-2012 TIME PLOTTED => 13:34

STRUCTURES DESIGN GENERAL PLAN SHEET (ENGLISH) (REV.09-01-10)

FILE => 33e0220-a-gp02.dgn

DIST	COUNTY	ROUTE	POST MILES TOTAL PROJECT	SHEET No.	TOTAL SHEETS
04	Ala	680	M3.6/R6.5	150	163

REGISTERED CIVIL ENGINEER 4-20-12 DATE

6-18-12
PLANS APPROVAL DATE

REGISTERED PROFESSIONAL ENGINEER LINAN WANG No. C54714 Exp. 12-31-13 CIVIL STATE OF CALIFORNIA

The State of California or its officers or agents shall not be responsible for the accuracy or completeness of electronic copies of this plan sheet.

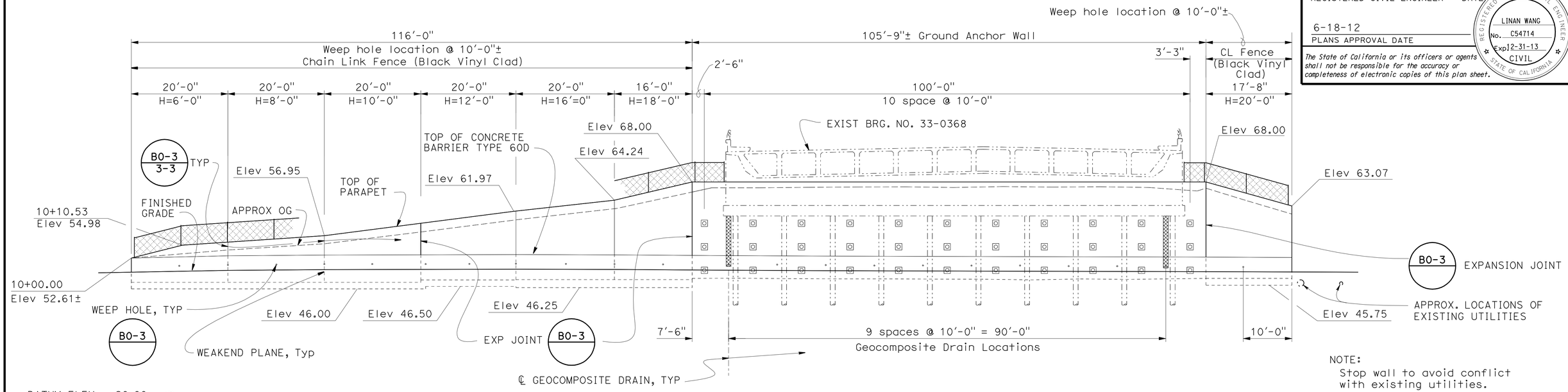

NOTE:
Stop wall to avoid conflict with existing utilities.

MIRROR ELEVATION B3-1 B3-8

1" = 10'-0"

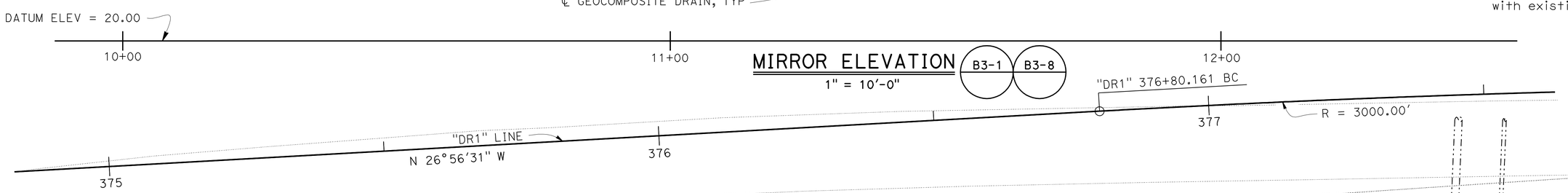

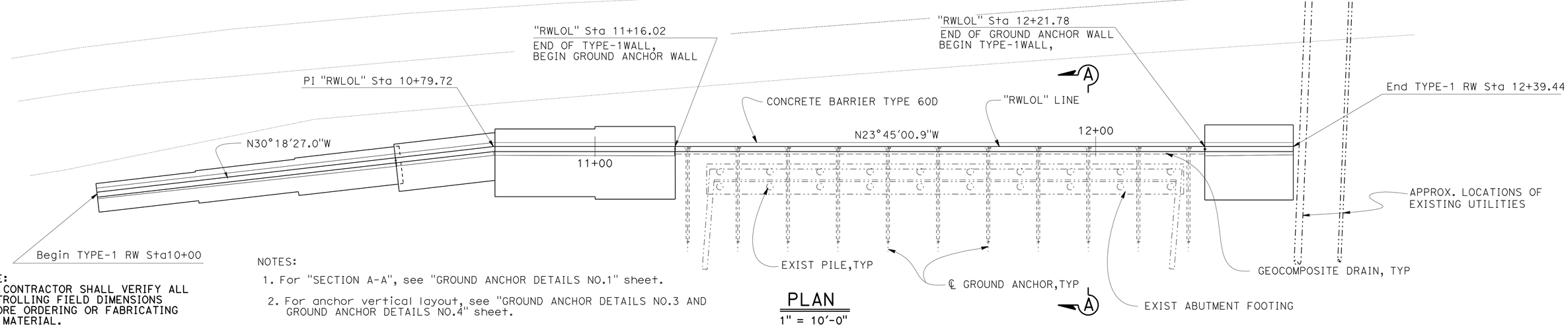

PLAN

1" = 10'-0"

NOTES:

1. For "SECTION A-A", see "GROUND ANCHOR DETAILS NO.1" sheet.
2. For anchor vertical layout, see "GROUND ANCHOR DETAILS NO.3 AND GROUND ANCHOR DETAILS NO.4" sheet.

NOTE:
THE CONTRACTOR SHALL VERIFY ALL CONTROLLING FIELD DIMENSIONS BEFORE ORDERING OR FABRICATING ANY MATERIAL.

	BY	CHECKED
DESIGN	Sergio Damian	Linan Wang
DETAILS	WEI ZHANG	Linan Wang
QUANTITIES	Sergio Damian	Linan Wang

STATE OF CALIFORNIA
DEPARTMENT OF TRANSPORTATION

DIVISION OF ENGINEERING SERVICES
STRUCTURE DESIGN
DESIGN BRANCH 4

BRIDGE NO. 33E-0220
POST MILE 4.82

RETAINING WALL NO. 1
STRUCTURE PLAN

STRUCTURES DESIGN DETAIL SHEET (ENGLISH) (REV. 09-01-10)

ORIGINAL SCALE IN INCHES FOR REDUCED PLANS 0 1 2 3

UNIT: 3579
PROJECT NUMBER & PHASE: 04120005280
CONTRACT NO.: 04-4G1001

DISREGARD PRINTS BEARING EARLIER REVISION DATES

REVISION DATES: 01-23-12 2-28-12 3-8-12 4-19-12

SHEET 3 OF 16

FILE => 33e0220-c-sp.dgn

USERNAME => s124496 DATE PLOTTED => 02-JUL-2012 TIME PLOTTED => 13:34

DIST	COUNTY	ROUTE	POST MILES TOTAL PROJECT	SHEET No.	TOTAL SHEETS
04	Ala	680	M3.6/R6.5	151	163

REGISTERED CIVIL ENGINEER 4-20-12 DATE

6-18-12
PLANS APPROVAL DATE

REGISTERED PROFESSIONAL ENGINEER LINAN WANG No. C54714 Exp 12-31-13 CIVIL STATE OF CALIFORNIA

The State of California or its officers or agents shall not be responsible for the accuracy or completeness of electronic copies of this plan sheet.

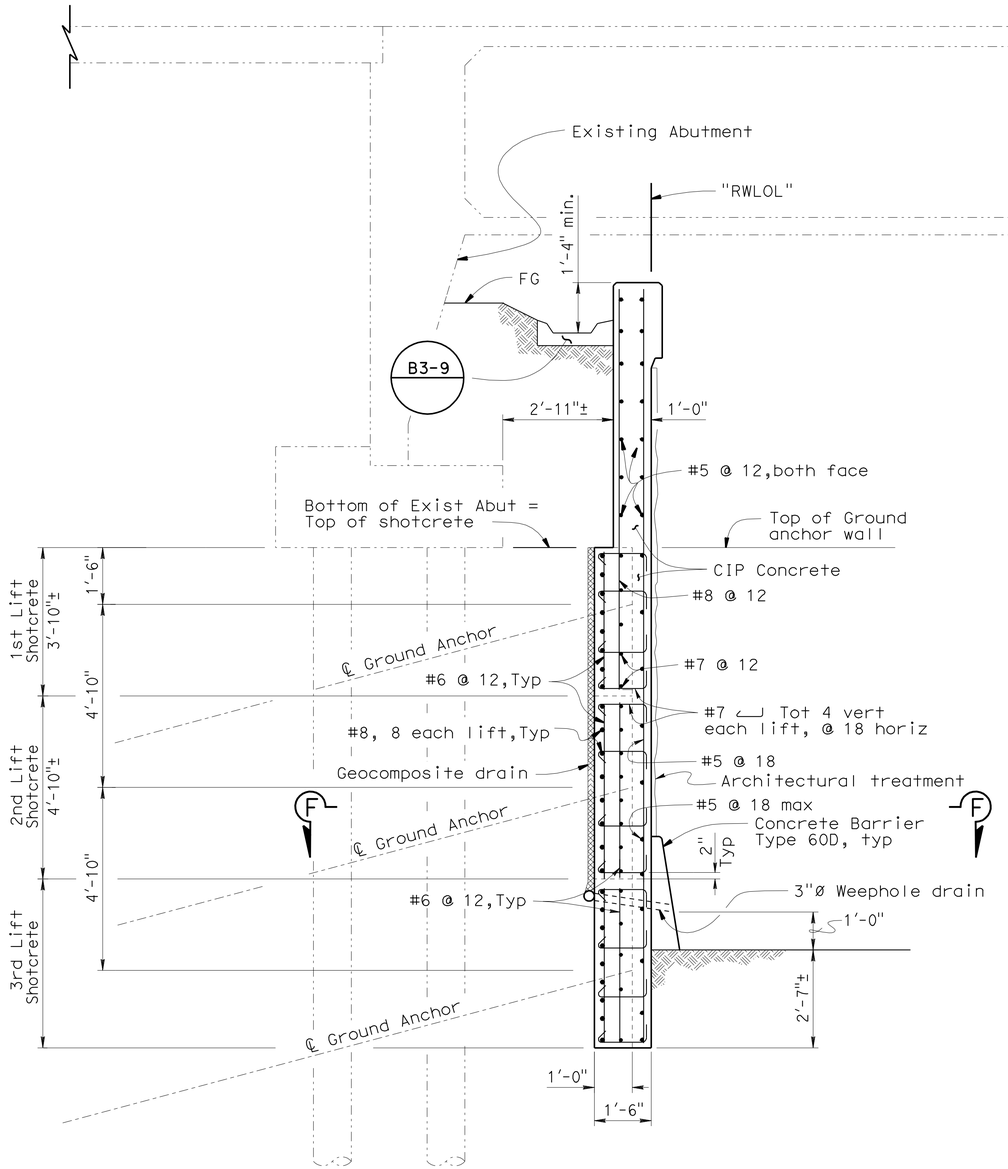

SECTION A-A

½" = 1'-0"

NOTE:
THE CONTRACTOR SHALL VERIFY ALL CONTROLLING FIELD DIMENSIONS BEFORE ORDERING OR FABRICATING ANY MATERIAL.

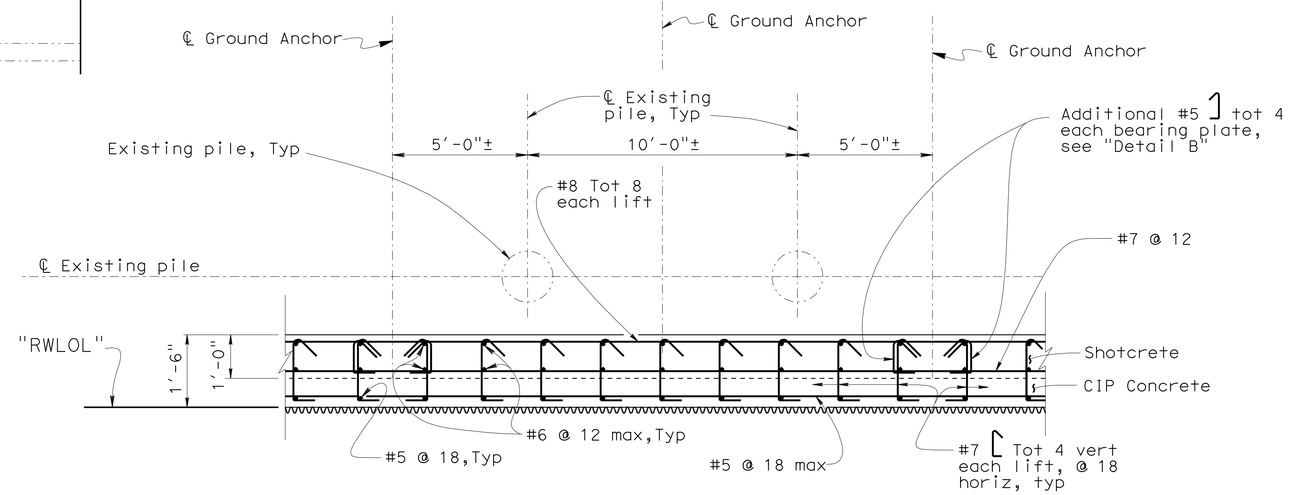

SECTION F-F

No scale

NOTE:
Geocomposite Drains not shown, see "STRUCTURE PLAN" for details.

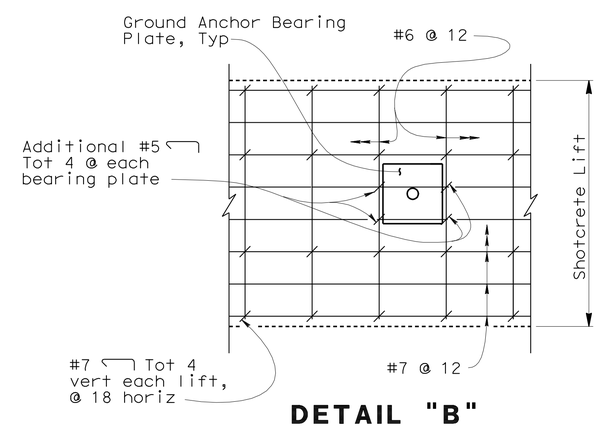

DETAIL "B"

No scale

NOTE:
For locations of Section A-A, see "STRUCTURE PLAN" sheet.

DESIGN	BY Sergio Damian	CHECKED Linan Wang	
DETAILS	BY Wei Zhang	CHECKED Linan Wang	
QUANTITIES	BY X	CHECKED X	

STATE OF CALIFORNIA
DEPARTMENT OF TRANSPORTATION

DIVISION OF ENGINEERING SERVICES
STRUCTURE DESIGN
DESIGN BRANCH 4

BRIDGE NO. 33E-0220
POST MILE 4.82

RETAINING WALL NO. 1
GROUND ANCHOR DETAILS NO.1

STRUCTURES DESIGN DETAIL SHEET (ENGLISH) (REV. 09-01-10)

ORIGINAL SCALE IN INCHES FOR REDUCED PLANS 0 1 2 3

UNIT: 3579
PROJECT NUMBER & PHASE: 04120005280
CONTRACT NO.: 04-4G1001

DISREGARD PRINTS BEARING EARLIER REVISION DATES

REVISION DATES: 01-26-12 3-8-12 04-26-12 3-1-12

SHEET 4 OF 16

FILE => 33e0220-t-tledet01.dgn

USERNAME => s124496 DATE PLOTTED => 02-JUL-2012 TIME PLOTTED => 13:34

DIST	COUNTY	ROUTE	POST MILES TOTAL PROJECT	SHEET No.	TOTAL SHEETS
04	Ala	680	M3.6/R6.5	152	163

REGISTERED CIVIL ENGINEER 4-20-12 DATE

6-18-12
PLANS APPROVAL DATE

REGISTERED PROFESSIONAL ENGINEER LINAN WANG No. C54714 Exp 12-31-13 CIVIL STATE OF CALIFORNIA

The State of California or its officers or agents shall not be responsible for the accuracy or completeness of electronic copies of this plan sheet.

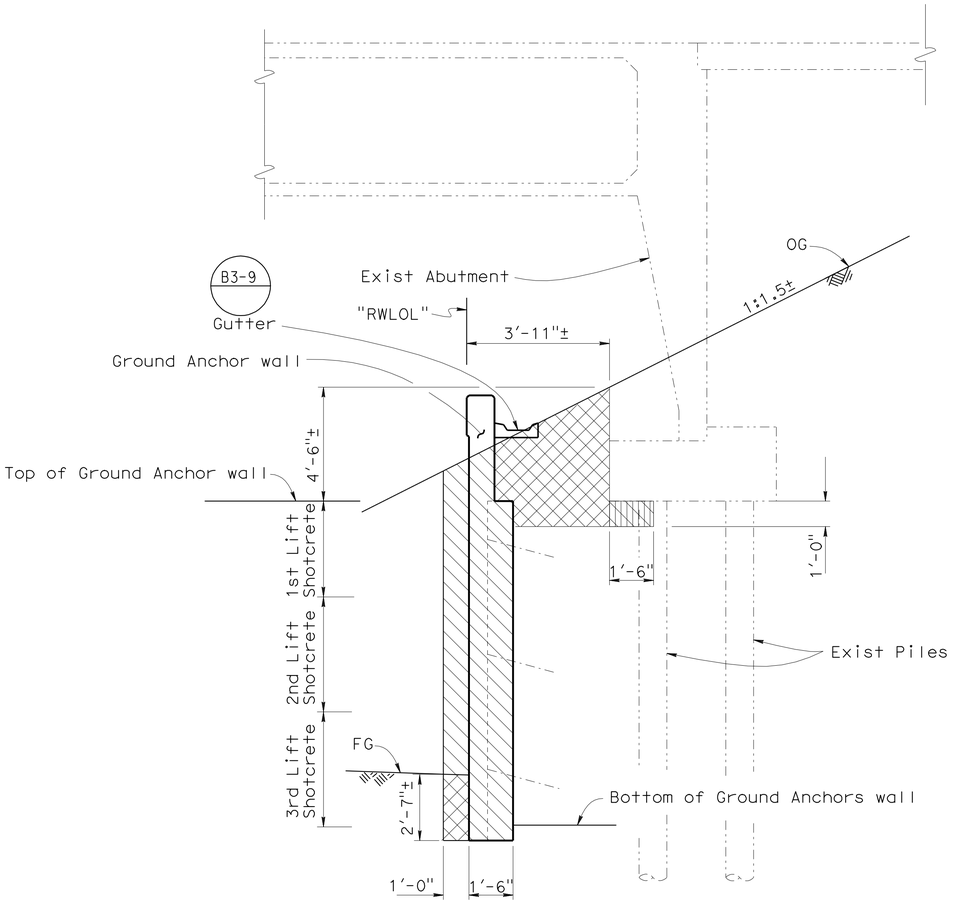

EXCAVATION AND BACKFILL WITHIN EXISTING BRIDGE LIMIT (GROUND ANCHOR WALL)

No Scale

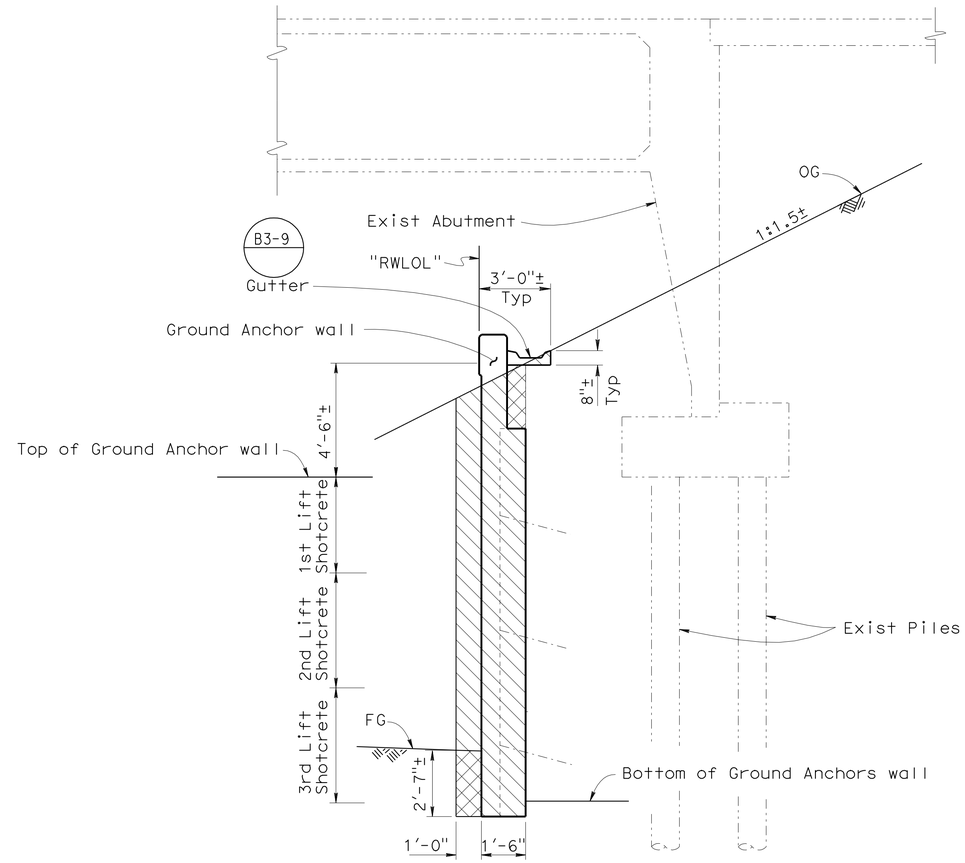

EXCAVATION AND BACKFILL BEYOND EXISTING ABUTMENT LIMIIT (GROUND ANCHOR WALL)

No Scale

LEGEND:

- Indicates Structure Excavation
- Indicates Structure Backfill
- Indicates Lean Concrete Backfill

NOTE:
THE CONTRACTOR SHALL VERIFY ALL CONTROLLING FIELD DIMENSIONS BEFORE ORDERING OR FABRICATING ANY MATERIAL.

	BY	CHECKED
DESIGN	Sergio Damian	Linan Wang
DETAILS	Wei zhang	Linan Wang
QUANTITIES	Sergio Damian	Linan Wang

STATE OF CALIFORNIA
DEPARTMENT OF TRANSPORTATION

DIVISION OF ENGINEERING SERVICES
STRUCTURE DESIGN
DESIGN BRANCH 4

BRIDGE NO. 33E-0220
POST MILE 4.82

RETAINING WALL NO. 1
GROUND ANCHOR DETAILS NO.2

STRUCTURES DESIGN DETAIL SHEET (ENGLISH) (REV. 09-01-10)

ORIGINAL SCALE IN INCHES FOR REDUCED PLANS 0 1 2 3

UNIT: 3579
PROJECT NUMBER & PHASE: 04120005280
CONTRACT NO.: 04-4G1001

DISREGARD PRINTS BEARING EARLIER REVISION DATES

REVISION DATES: 02-24-12 3-6-12 4-26-12 3-1-12

SHEET 5 OF 16

FILE => 33e0220-t-tiedet02.dgn

USERNAME => s124496 DATE PLOTTED => 02-JUL-2012 TIME PLOTTED => 13:34

DIST	COUNTY	ROUTE	POST MILES TOTAL PROJECT	SHEET No.	TOTAL SHEETS
04	Ala	680	M3.6/R6.5	153	163

REGISTERED CIVIL ENGINEER 4-20-12 DATE

6-18-12
PLANS APPROVAL DATE

REGISTERED PROFESSIONAL ENGINEER LINAN WANG No. C54714 Exp 12-31-13 CIVIL STATE OF CALIFORNIA

The State of California or its officers or agents shall not be responsible for the accuracy or completeness of electronic copies of this plan sheet.

NOTES:

(A) Steel tube (min. length = 3'-4", min. thickness =¼") welded to bearing plate. Galvanize assembly after fabrication.

(B) 2" min. concrete cover over Ground Anchor anchorage and tendon.

(C) The Bonded Length shall be determined by the Contractor.

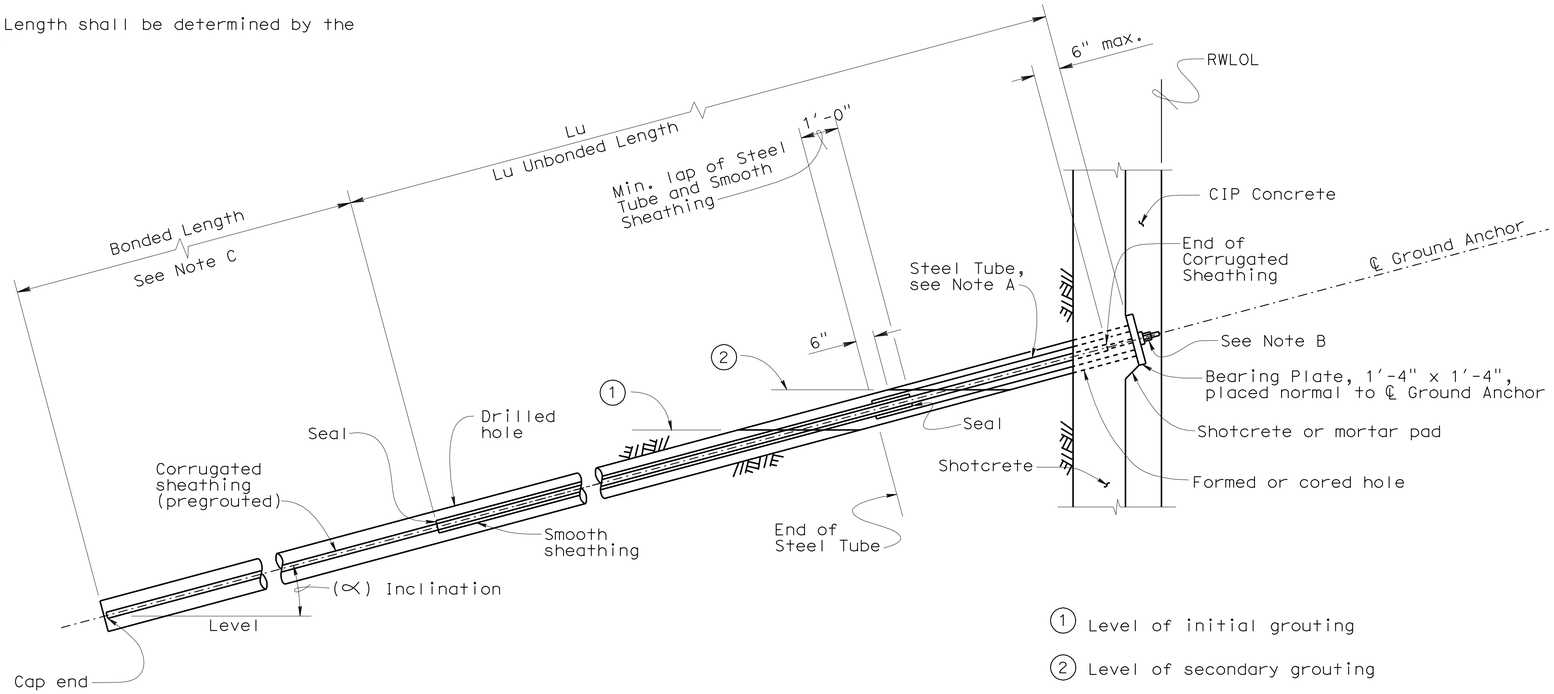

GROUND ANCHOR TENDON DETAIL (BARS)

No Scale

NOTE:
For Mortar Pad Details, see "Ground Anchor Details No.4" sheet.

SOIL PARAMETERS

(For determination of design lateral earth pressure on wall)

Soil Density γ (kip/ft^3)	Soil Friction Angle ϕ
0.120	32°

RWLOL			
Ground Anchor Row	Lu (ft)	T (kip)	∝ (°)
1st	25	75	25
2nd	25	75	25
3rd	25	75	25

GENERAL NOTES

DESIGN: AASHTO Standard Specifications for Highway Bridges dated 1996 with Interim Specifications Bridges and as supplemented by Bridge Design Specification (Caltrans).

STRUCTURAL STEEL:

fs = 36 ksi

REINFORCED CONCRETE:

f'c = 4 ksi (Concrete compressive strength at 28 days)
fy = 60 ksi (Yield strength of reinforcement)

SHOTCRETE CONCRETE:

f'c = 4 ksi (Concrete compressive strength at 28 days)

NOTE:
THE CONTRACTOR SHALL VERIFY ALL CONTROLLING FIELD DIMENSIONS BEFORE ORDERING OR FABRICATING ANY MATERIAL.

PRESTRESSING (TIEBACKS)

PRESTRESSING STEEL:

BARS - ASTM designation: A722 Type II

Strands - ASTM designation: A416

T = Design force per Ground Anchor

f_{pu} = Minimum tensile strength of prestressing steel (kips per square inch)

A_s (min.) = Minimum cross sectional area of prestressing steel in Ground Anchor tendon (Square inch)

$$A_s \text{ (min.)} = \frac{1.5\ T}{0.75\ f_{pu}}$$

MINIMUM SHOTCRETE STRENGTH
WHEN STRESSING THE GROUND ANCHORS: f'ci = 36 ksi

	BY	CHECKED
DESIGN	Sergio Damian	Linan Wang
DETAILS	A. Onodera/ Wei Zhang	Linan Wang
QUANTITIES	Sergio Damian	Linan Wang

STATE OF CALIFORNIA
DEPARTMENT OF TRANSPORTATION

DIVISION OF ENGINEERING SERVICES
STRUCTURE DESIGN
DESIGN BRANCH 4

BRIDGE NO. 33E-0220
POST MILE 4.82

RETAINING WALL NO. 1
GROUND ANCHOR DETAILS NO.3

STRUCTURES DESIGN DETAIL SHEET (ENGLISH) (REV. 09-01-10)

ORIGINAL SCALE IN INCHES FOR REDUCED PLANS 0 1 2 3

UNIT: 3579
PROJECT NUMBER & PHASE: 04120005280
CONTRACT NO.: 04-4G1001

DISREGARD PRINTS BEARING EARLIER REVISION DATES

REVISION DATES: ~~02-04-12~~ ~~02-14-12~~ 3-1-12

SHEET 6 OF 16

FILE => 33e0220-t-tiedet03.dgn

USERNAME => s124496 DATE PLOTTED => 02-JUL-2012 TIME PLOTTED => 13:34

DIST	COUNTY	ROUTE	POST MILES TOTAL PROJECT	SHEET No.	TOTAL SHEETS
04	Ala	680	M3.6/R6.5	154	163

REGISTERED CIVIL ENGINEER 4-20-12 DATE

6-18-12
PLANS APPROVAL DATE

REGISTERED PROFESSIONAL ENGINEER LINAN WANG No. C54714 Exp 12-31-13 CIVIL STATE OF CALIFORNIA

The State of California or its officers or agents shall not be responsible for the accuracy or completeness of electronic copies of this plan sheet.

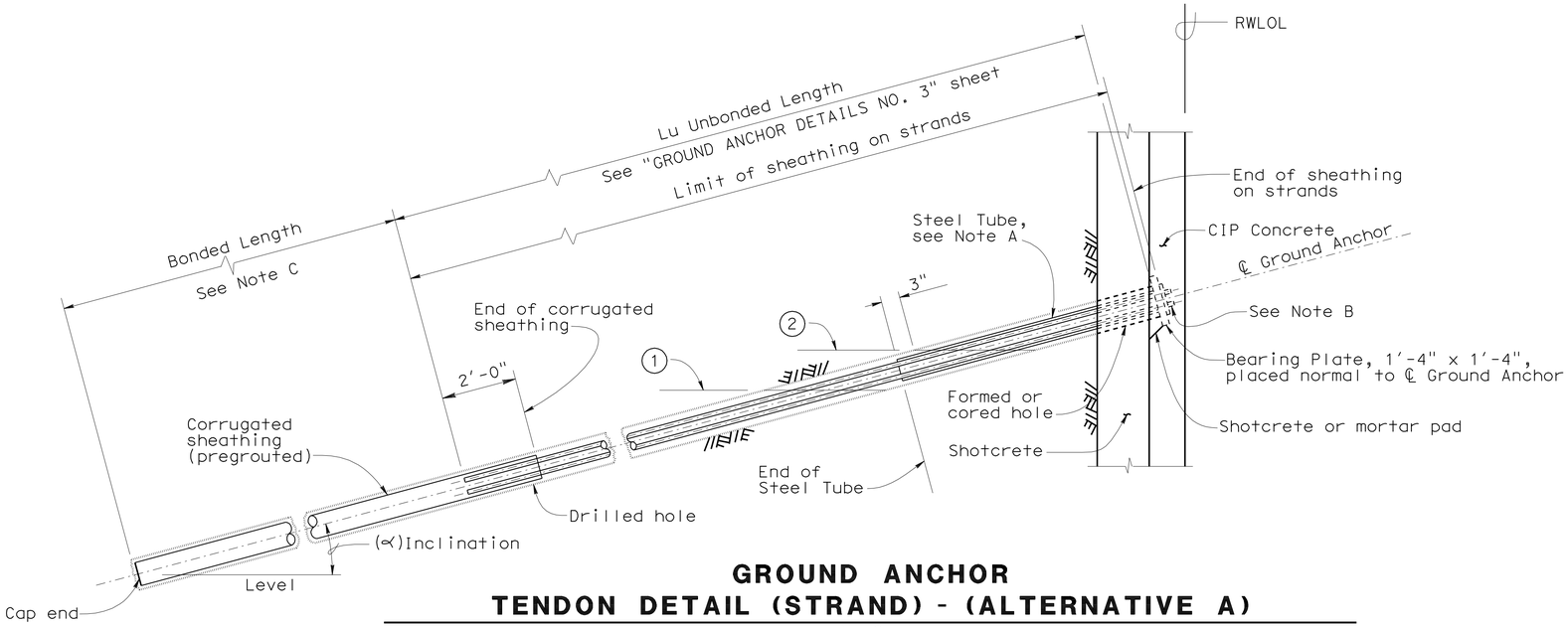

GROUND ANCHOR TENDON DETAIL (STRAND) - (ALTERNATIVE A)

No Scale

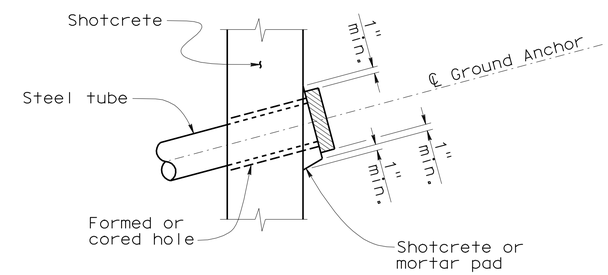

MORTAR PAD DETAIL

No scale

NOTES:

Ⓐ Steel tube (min. length = 3'-4", min. thickness = 1/4") welded to bearing plate. Galvanize assembly after fabrication.

Ⓑ 2" min. concrete cover Ground Anchor anchorage and tendon.

Ⓒ The Bonded Length shall be determined by the Contractor.

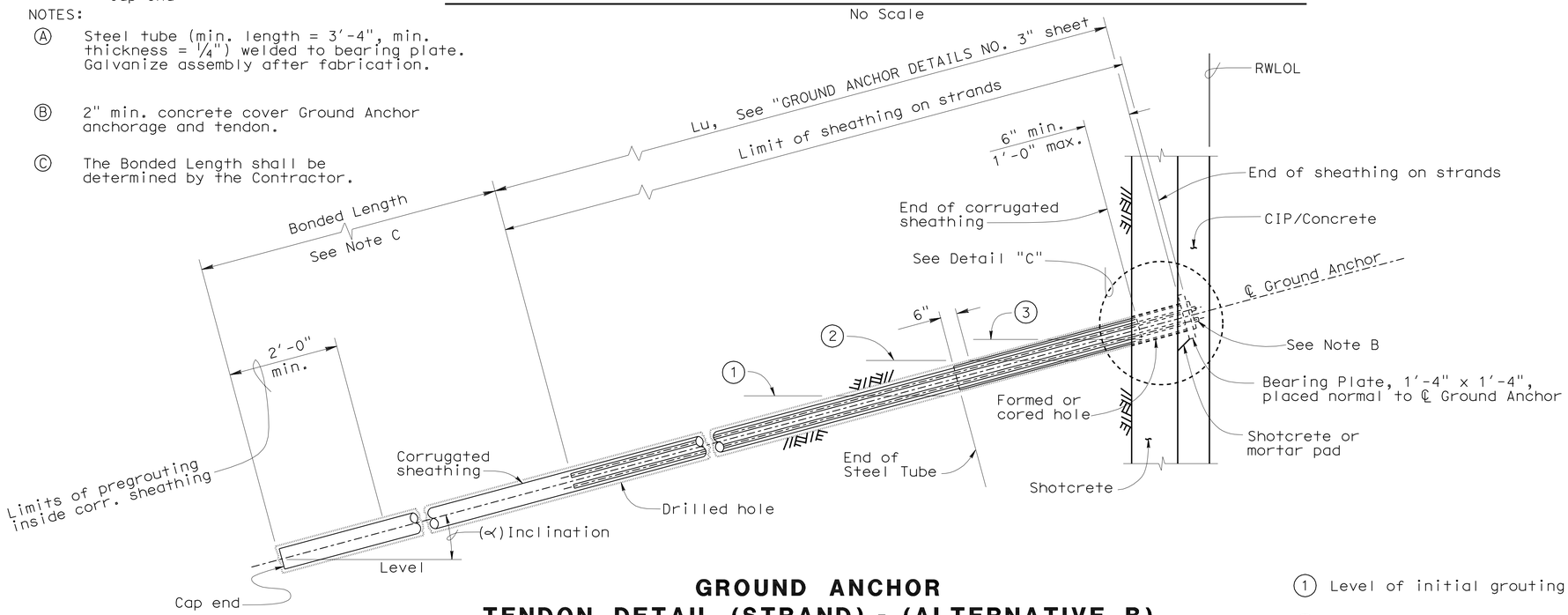

GROUND ANCHOR TENDON DETAIL (STRAND) - (ALTERNATIVE B)

No Scale

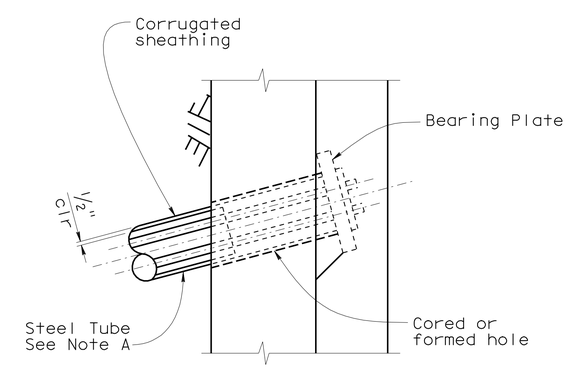

DETAIL "C"

No Scale

NOTE:
THE CONTRACTOR SHALL VERIFY ALL CONTROLLING FIELD DIMENSIONS BEFORE ORDERING OR FABRICATING ANY MATERIAL.

① Level of initial grouting

② Level of secondary grouting

③ Level of initial grout inside corrugated sheathing

DESIGN	BY Sergio Damian	CHECKED Linan Wang	
DETAILS	BY A. Onodera / Wei Zhang	CHECKED Linan Wang	
QUANTITIES	BY Sergio Damian	CHECKED Linan Wang	

STATE OF CALIFORNIA DEPARTMENT OF TRANSPORTATION

DIVISION OF ENGINEERING SERVICES STRUCTURE DESIGN DESIGN BRANCH 4

BRIDGE NO. 33E-0220
POST MILE 4.82

RETAINING WALL NO. 1
GROUND ANCHOR DETAILS NO.4

STRUCTURES DESIGN DETAIL SHEET (ENGLISH) (REV. 09-01-10)

ORIGINAL SCALE IN INCHES FOR REDUCED PLANS 0 1 2 3

UNIT: 3579
PROJECT NUMBER & PHASE: 04120005280
CONTRACT NO.: 04-4G1001

DISREGARD PRINTS BEARING EARLIER REVISION DATES

REVISION DATES 02-01-12 02-14-12 3-1-12

SHEET 7 OF 16

FILE => 33e0220-t-tledet04.dgn

USERNAME => s124496 DATE PLOTTED => 02-JUL-2012 TIME PLOTTED => 14:20

DIST	COUNTY	ROUTE	POST MILES TOTAL PROJECT	SHEET No.	TOTAL SHEETS
04	Ala	680	M3.6/R6.5	155	163

REGISTERED CIVIL ENGINEER 4-20-12 DATE

6-18-12
PLANS APPROVAL DATE

REGISTERED PROFESSIONAL ENGINEER
LINAN WANG
No. C54714
Exp 12-31-13
CIVIL
STATE OF CALIFORNIA

The State of California or its officers or agents shall not be responsible for the accuracy or completeness of electronic copies of this plan sheet.

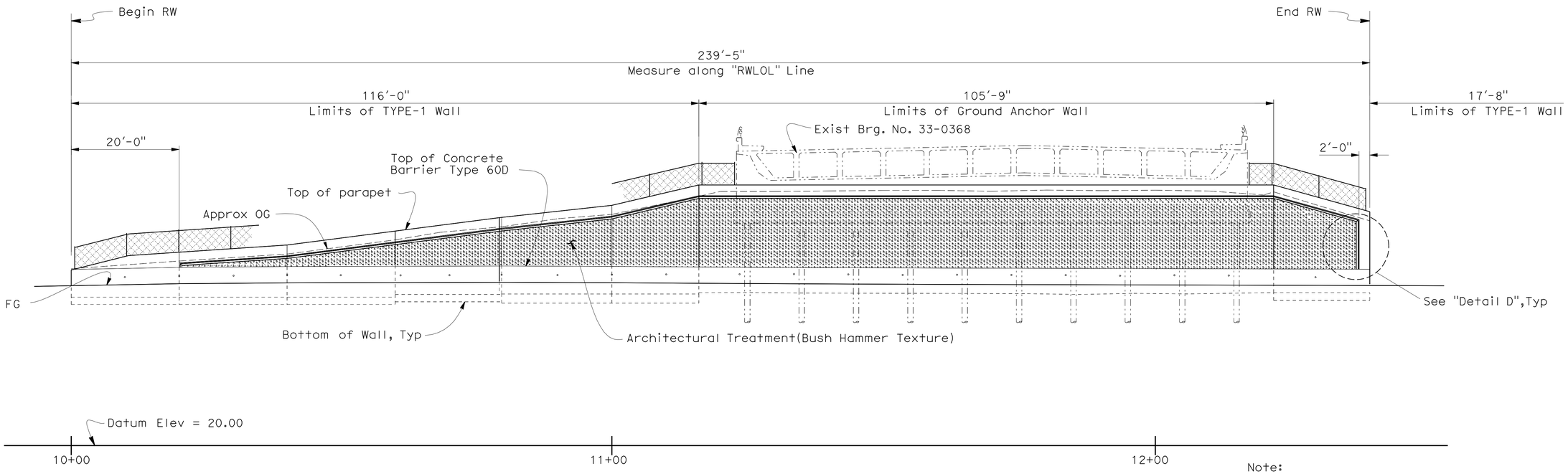

MIRROR ELEVATION

1" = 10'-0"

Note:
For information of "Detail D" see "ARCHITECTURAL DETAILS NO.2" sheet

NOTE:
THE CONTRACTOR SHALL VERIFY ALL CONTROLLING FIELD DIMENSIONS BEFORE ORDERING OR FABRICATING ANY MATERIAL.

	BY	CHECKED
DESIGN	Sergio Damian	Linan Wang
DETAILS	WEI ZHANG	Linan Wang
QUANTITIES		

STATE OF CALIFORNIA
DEPARTMENT OF TRANSPORTATION

DIVISION OF ENGINEERING SERVICES
STRUCTURE DESIGN
DESIGN BRANCH 4

BRIDGE NO. 33E-0220
POST MILE 4.82

RETAINING WALL NO. 1

ARCHITECTURAL TREATMENT DETAILS NO.1

STRUCTURES DESIGN DETAIL SHEET (ENGLISH) (REV. 09-01-10)

ORIGINAL SCALE IN INCHES FOR REDUCED PLANS 0 1 2 3

UNIT: 3579
PROJECT NUMBER & PHASE: 04120005280
CONTRACT NO.: 04-4G1001

DISREGARD PRINTS BEARING EARLIER REVISION DATES

REVISION DATES: 02-06-12 02-21-12 3-7-12

SHEET 8 OF 16

FILE => 33e0220-u-p-archdts01.dgn

USERNAME => s124496 DATE PLOTTED => 02-JUL-2012 TIME PLOTTED => 13:34

DIST	COUNTY	ROUTE	POST MILES TOTAL PROJECT	SHEET No.	TOTAL SHEETS
04	Ala	680	M3.6/R6.5	156	163

REGISTERED CIVIL ENGINEER 4-20-12 DATE

6-18-12
PLANS APPROVAL DATE

REGISTERED PROFESSIONAL ENGINEER LINAN WANG No. C54714 Exp 12-31-13 CIVIL STATE OF CALIFORNIA

The State of California or its officers or agents shall not be responsible for the accuracy or completeness of electronic copies of this plan sheet.

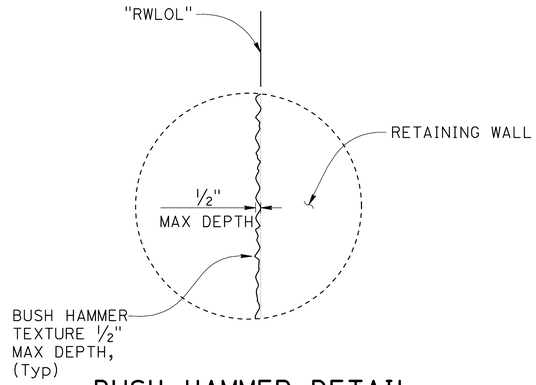

BUSH HAMMER DETAIL

No Scale

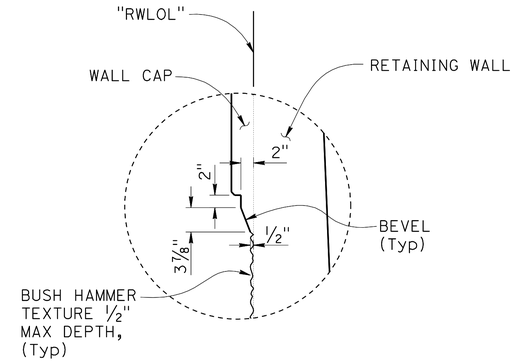

SECTION DETAIL

No Scale

NOTES:
1. Wall cap, face, and bevels shall be Class 1 finish
2. Fence and concrete gutter not shown for clarity
3. For Architectural Treatment Reinforcement, see "ARCHITECTURAL TREATMENT DETAILS NO. 3" sheet

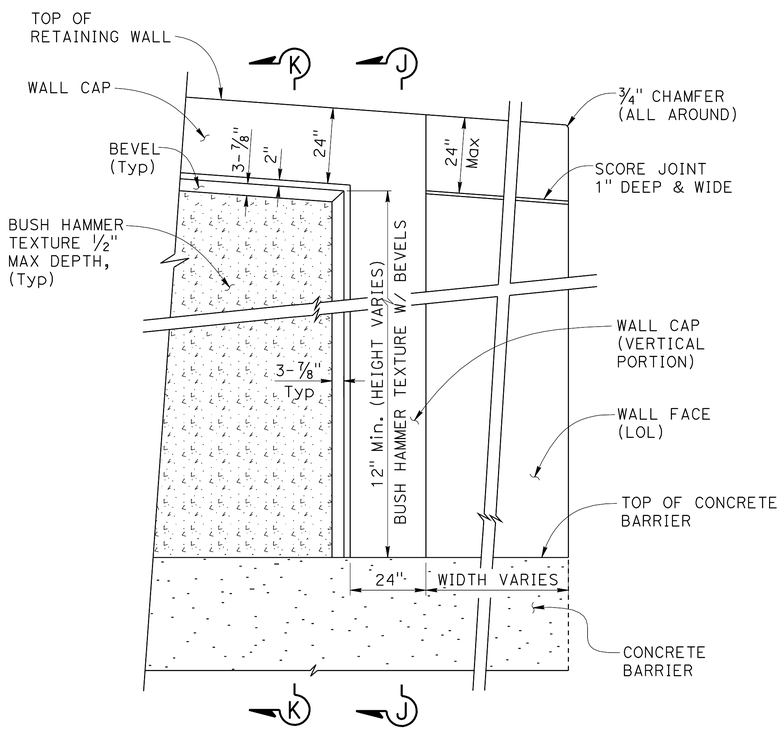

DETAIL "D"
ARCHITECTURAL TEXTURE / ELEVATION (Typ)

No Scale

NOTE:
THE CONTRACTOR SHALL VERIFY ALL CONTROLLING FIELD DIMENSIONS BEFORE ORDERING OR FABRICATING ANY MATERIAL.

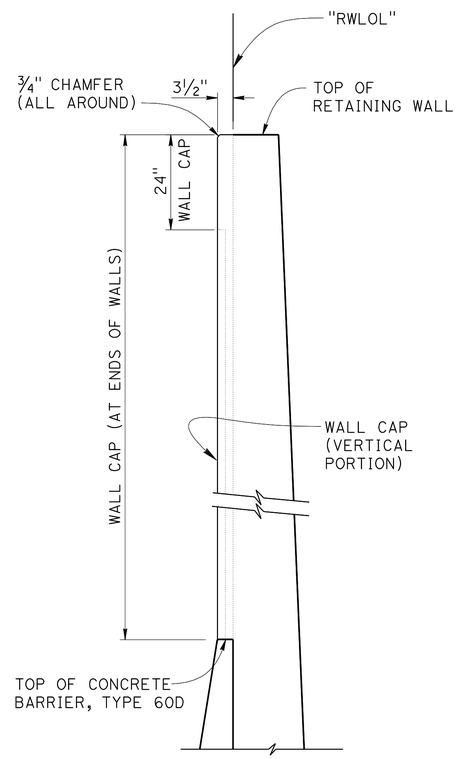

SECTION J-J

No Scale

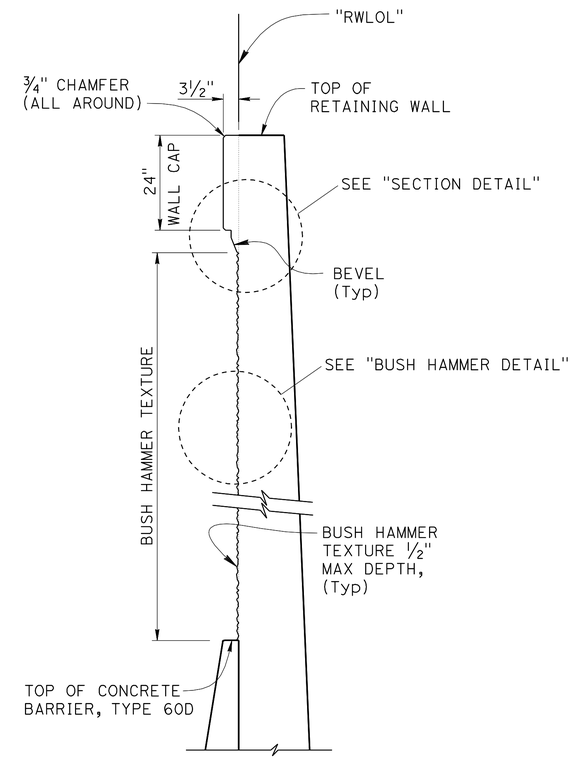

SECTION K-K

No Scale

DESIGN	BY Sergio Damian	CHECKED Linan Wang	
DETAILS	BY Wei Zhang	CHECKED Linan Wang	
QUANTITIES	BY Sergio Damian	CHECKED Linan Wang	

STATE OF CALIFORNIA
DEPARTMENT OF TRANSPORTATION

DIVISION OF ENGINEERING SERVICES
STRUCTURE DESIGN
DESIGN BRANCH 4

BRIDGE NO. 33E-0220
POST MILE 4.82

RETAINING WALL NO. 1
ARCHITECTURAL TREATMENT DETAILS NO.2

STRUCTURES DESIGN DETAIL SHEET (ENGLISH) (REV. 09-01-10)

ORIGINAL SCALE IN INCHES FOR REDUCED PLANS 0 1 2 3

UNIT: 3579
PROJECT NUMBER & PHASE: 04120005280
CONTRACT NO.: 04-4G1001

DISREGARD PRINTS BEARING EARLIER REVISION DATES

REVISION DATES 02/08/12 02/11/12

SHEET 9 OF 16

FILE => 33e0220-u-p-archtreat02.dgn

USERNAME => s124436 DATE PLOTTED => 02-JUL-2012 TIME PLOTTED => 14:21

DIST	COUNTY	ROUTE	POST MILES TOTAL PROJECT	SHEET No.	TOTAL SHEETS
04	Ala	680	M3.6/R6.5	157	163

REGISTERED CIVIL ENGINEER 4-20-12 DATE

6-18-12
PLANS APPROVAL DATE

REGISTERED PROFESSIONAL ENGINEER LINANxWANG No. C54X14 Exp12-31x13 CIVIL STATE OF CALIFORNIA

The State of California or its officers or agents shall not be responsible for the accuracy or completeness of electronic copies of this plan sheet.

NOTES:
1. Wall cap, face, and bevels shall be Class 1 finish
2. Fence and concrete gutter not shown for clarity
3. For Retaining Wall Type 1 reinforcement, see B3-1
4. For additional Architectural Treatment Details, see "ARCHITECTURAL TREATMENT DETAILS NO. 1" and "ARCHITECTURAL TREATMENT DETAILS NO. 2" sheets

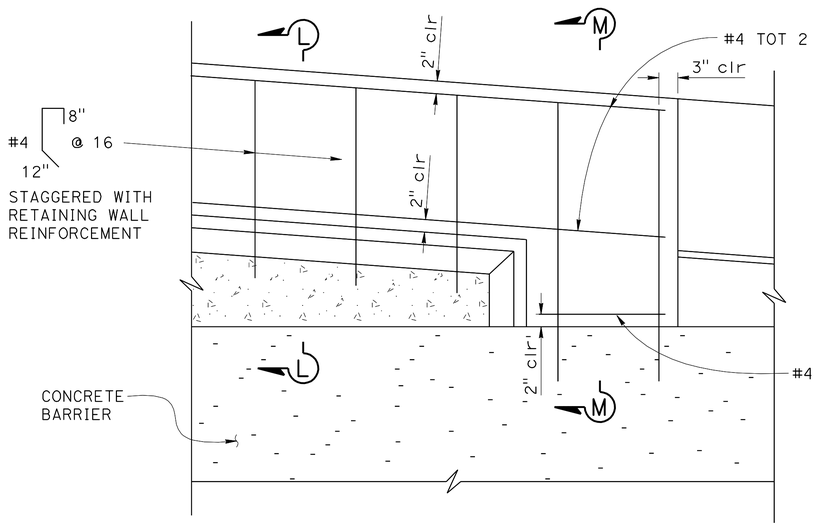

ELEVATION
No Scale

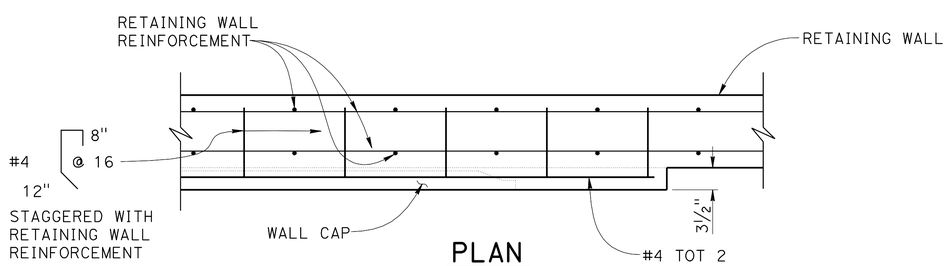

PLAN
No Scale

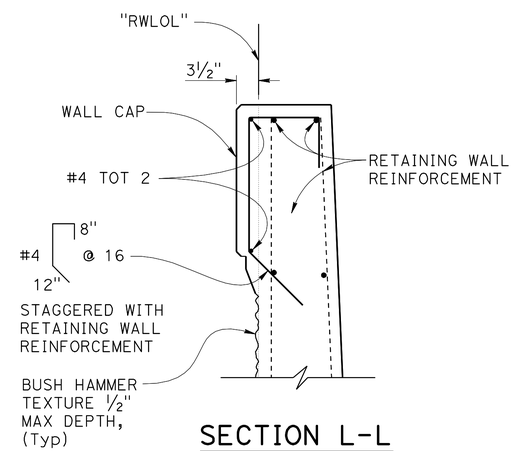

SECTION L-L

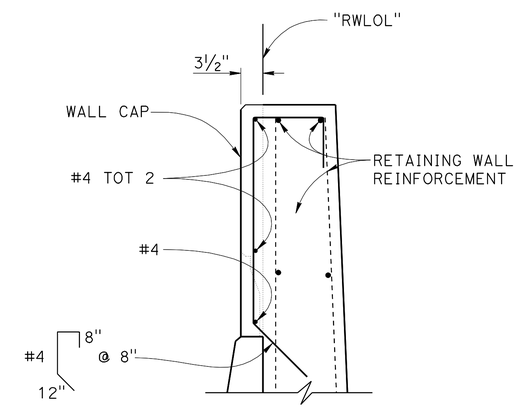

SECTION M-M

REINFORCEMENT AT WALL CAP
No Scale

DESIGN	BY Sergio Damian	CHECKED Linan Wang	
DETAILS	BY Wei Zhang	CHECKED Linan Wang	
QUANTITIES	BY Sergio Damian	CHECKED Linan Wang	

STATE OF CALIFORNIA
DEPARTMENT OF TRANSPORTATION

DIVISION OF ENGINEERING SERVICES
STRUCTURE DESIGN
DESIGN BRANCH 4

BRIDGE NO. 33E-0220
POST MILE 4.82

RETAINING WALL NO. 1
ARCHITECTURAL TREATMENT DETAILS NO.3

STRUCTURES DESIGN DETAIL SHEET (ENGLISH) (REV. 09-01-10)

ORIGINAL SCALE IN INCHES FOR REDUCED PLANS 0 1 2 3

UNIT: 3579
PROJECT NUMBER & PHASE: 04120005280
CONTRACT NO.: 04-4G1001

DISREGARD PRINTS BEARING EARLIER REVISION DATES

REVISION DATES: 02/08/12 02/11/12

SHEET 10 OF 16

FILE => 33e0220-u-p-archtreat03.dgn

USERNAME => s124496 DATE PLOTTED => 02-JUL-2012 TIME PLOTTED => 13:35

DIST	COUNTY	ROUTE	POST MILES TOTAL PROJECT	SHEET No.	TOTAL SHEETS
04	Ala	680	M3.6/R6.5	158	163

REGISTERED CIVIL ENGINEER 4-20-12 DATE

6-18-12
PLANS APPROVAL DATE

REGISTERED PROFESSIONAL ENGINEER
LINAN WANG
No. C54714
Exp 12-31-13
CIVIL
STATE OF CALIFORNIA

The State of California or its officers or agents shall not be responsible for the accuracy or completeness of electronic copies of this plan sheet.

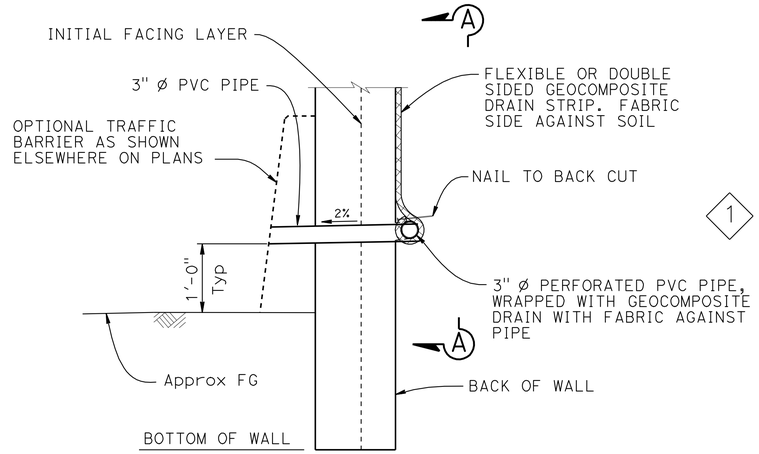

2 GROUND ANCHOR WALL DRAIN DETAIL AT WEEPHOLE OPTION A

No scale

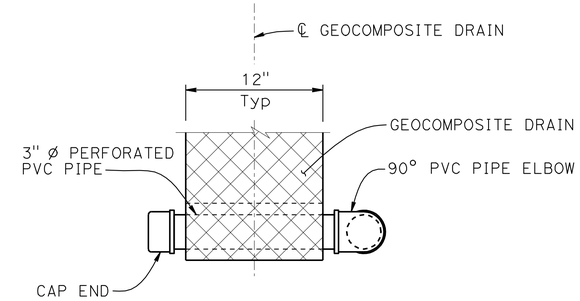

VIEW A-A

No scale

NOTES:

1. Geocomposite drain strip per Section 88 Geosynthetics of the Standard Specifications
2. Elevation of drains and weepholes as shown elsewhere on plans

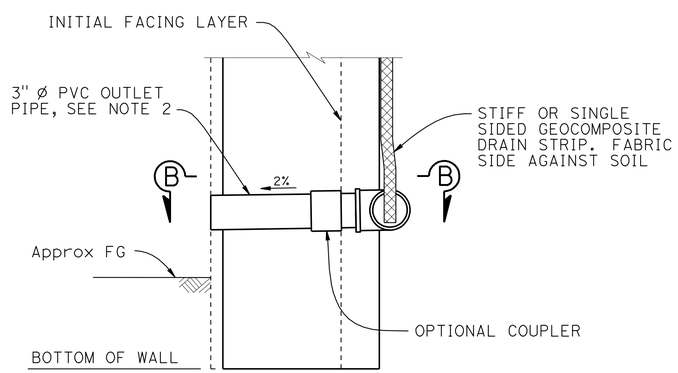

2 GROUND ANCHOR WALL DRAIN DETAIL AT WEEPHOLE OPTION B

No scale

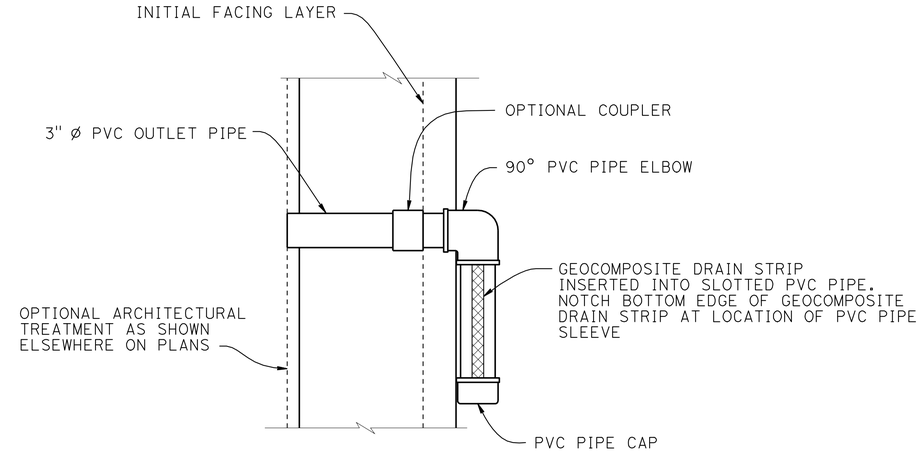

SECTION B-B

No Scale

NOTE:
THE CONTRACTOR SHALL VERIFY ALL CONTROLLING FIELD DIMENSIONS BEFORE ORDERING OR FABRICATING ANY MATERIAL.

REVISED STANDARD DRAWING

FILE NO. xs12-021

APPROVAL DATE July 2011

1 - Revised detail
2 - Revised name

STATE OF CALIFORNIA
DEPARTMENT OF TRANSPORTATION

DIVISION OF ENGINEERING SERVICES

BRIDGE NO. 33E-0220
POST MILE 4.82

RETAINING WALL NO. 1
GROUND ANCHOR WALL DRAIN DETAILS

DS OSD 2147A (ENGLISH STANDARD DRAWING "XS" BORDER REV. (02-02-11)

ORIGINAL SCALE IN INCHES FOR REDUCED PLANS 0 1 2 3

UNIT: 3579
PROJECT NUMBER & PHASE: 04120005280
CONTRACT NO.: 04-4G1001

DISREGARD PRINTS BEARING EARLIER REVISION DATES

REVISION DATES 02-04-12

SHEET 11 OF 16

FILE => 33e0220-u-xs12-021.dgn

USERNAME => s124496 DATE PLOTTED => 02-JUL-2012 TIME PLOTTED => 13:35

DIST	COUNTY	ROUTE	POST MILES TOTAL PROJECT	SHEET No.	TOTAL SHEETS
04	Ala	680	M3.6/R6.5	159	163

REGISTERED CIVIL ENGINEER 4-20-12 DATE

6-18-12
PLANS APPROVAL DATE

REGISTERED PROFESSIONAL ENGINEER Linan Wang No. C54714 Exp. 12/31/13 CIVIL STATE OF CALIFORNIA

The State of California or its officers or agents shall not be responsible for the accuracy or completeness of electronic copies of this plan sheet.

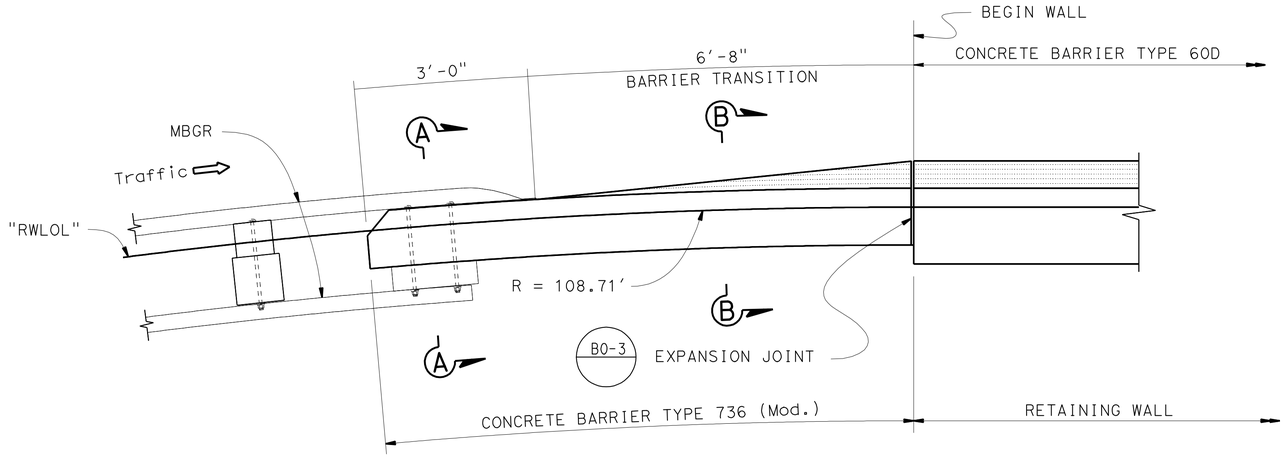

CONCRETE BARRIER TYPE 736 (MOD.) TRANSITION

B11-56

3/4" = 1'-0"

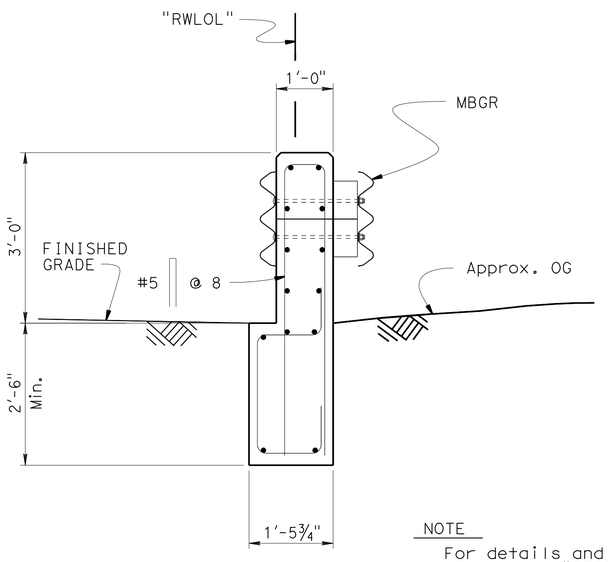

NOTE

For details and dimensions not shown, see "SECTION A-A".

SECTION A-A

3/4" = 1'-0"

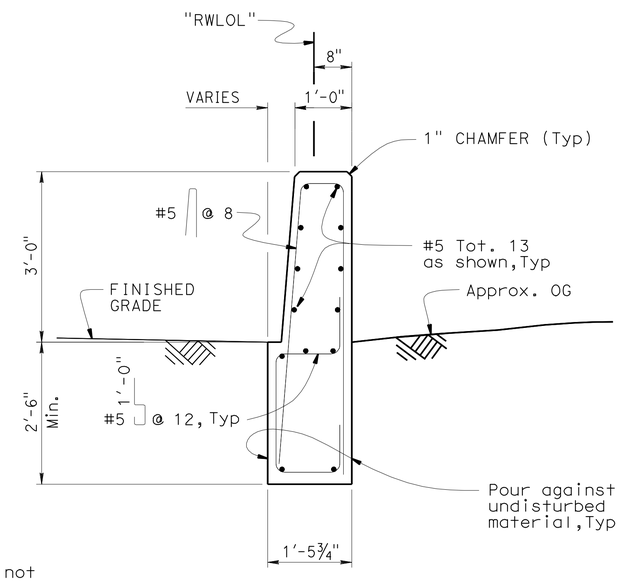

SECTION B-B

3/4" = 1'-0"

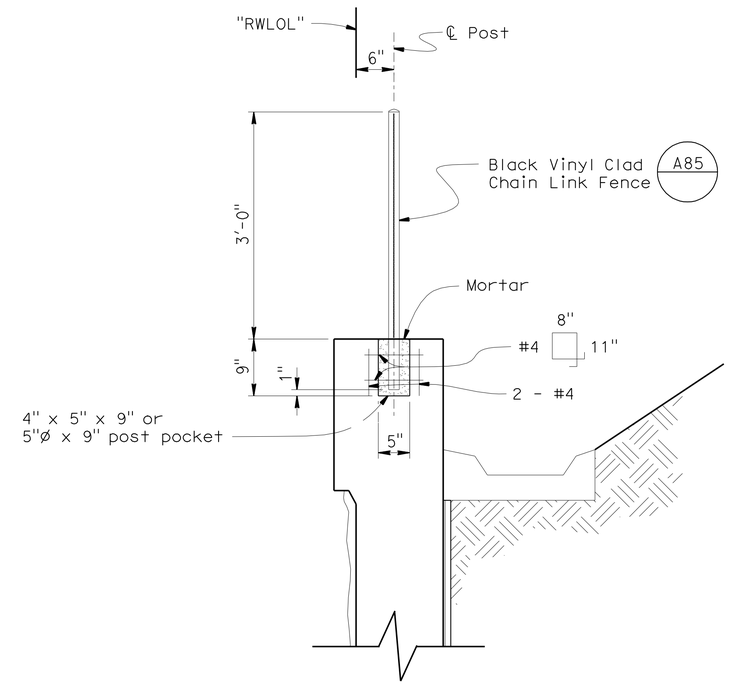

POST POCKET DETAIL

1" = 1'-0"

Note

Detail supersedes post pocket details on Standard Plan, A85, page 111 of the Standand Plans Dated 2006.

NOTE:
THE CONTRACTOR SHALL VERIFY ALL CONTROLLING FIELD DIMENSIONS BEFORE ORDERING OR FABRICATING ANY MATERIAL.

	BY	CHECKED
DESIGN	Sergio Damian	Linan Wang
DETAILS	Jeff Thorne	Linan Wang
QUANTITIES	Tuong Ha	Linan Wang

STATE OF CALIFORNIA
DEPARTMENT OF TRANSPORTATION

DIVISION OF ENGINEERING SERVICES
STRUCTURE DESIGN
DESIGN BRANCH 4

BRIDGE NO. 33E-0220
POST MILE 5.37

RETAINING WALL NO. 1
MISCELLANEOUS DETAILS

STRUCTURES DESIGN DETAIL SHEET (ENGLISH) (REV. 09-01-10)

ORIGINAL SCALE IN INCHES FOR REDUCED PLANS 0 1 2 3

UNIT: 3579
PROJECT NUMBER & PHASE: 04120005280
CONTRACT NO.: 04-4G1001

DISREGARD PRINTS BEARING EARLIER REVISION DATES

REVISION DATES: 04-17-12 04-18-12

SHEET 12 OF 16

FILE => 33e0220-v-mlscdt01.dgn

USERNAME => s124496 DATE PLOTTED => 02-JUL-2012 TIME PLOTTED => 13:35

DIST	COUNTY	ROUTE	POST MILES TOTAL PROJECT	SHEET No.	TOTAL SHEETS
04	Ala	680	M3.6/R6.5	160	163

M. Momenzadeh 4-27-12
REGISTERED PROFESSIONAL ENGINEER DATE

6-18-12
PLANS APPROVAL DATE

REGISTERED PROFESSIONAL ENGINEER Mahmood Momenzadeh No. GE2685 Exp. 12-31-13 Geotechnical STATE OF CALIFORNIA

The State of California or its officers or agents shall not be responsible for the accuracy or completeness of electronic copies of this plan sheet.

This LOTB sheet was prepared in accordance with the Caltrans Soil & Rock Logging, Classification, & Presentation Manual (2010 Edition).

BENCH MARK

LL15, PK/CT shiner on Island,
58.0′ Lt Sta 376+86.0 "DR1" Line
N: 2013077.886565
E: 6144111.025401
Elev 76.994′
Datum Vert. NAVD88

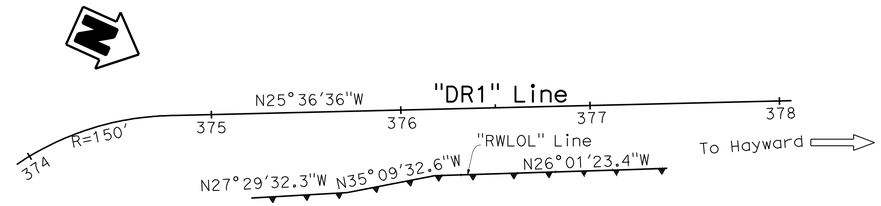

A-11-007
6"

PLAN
1" = 40′

Note: No ground water encountered during field investigation.

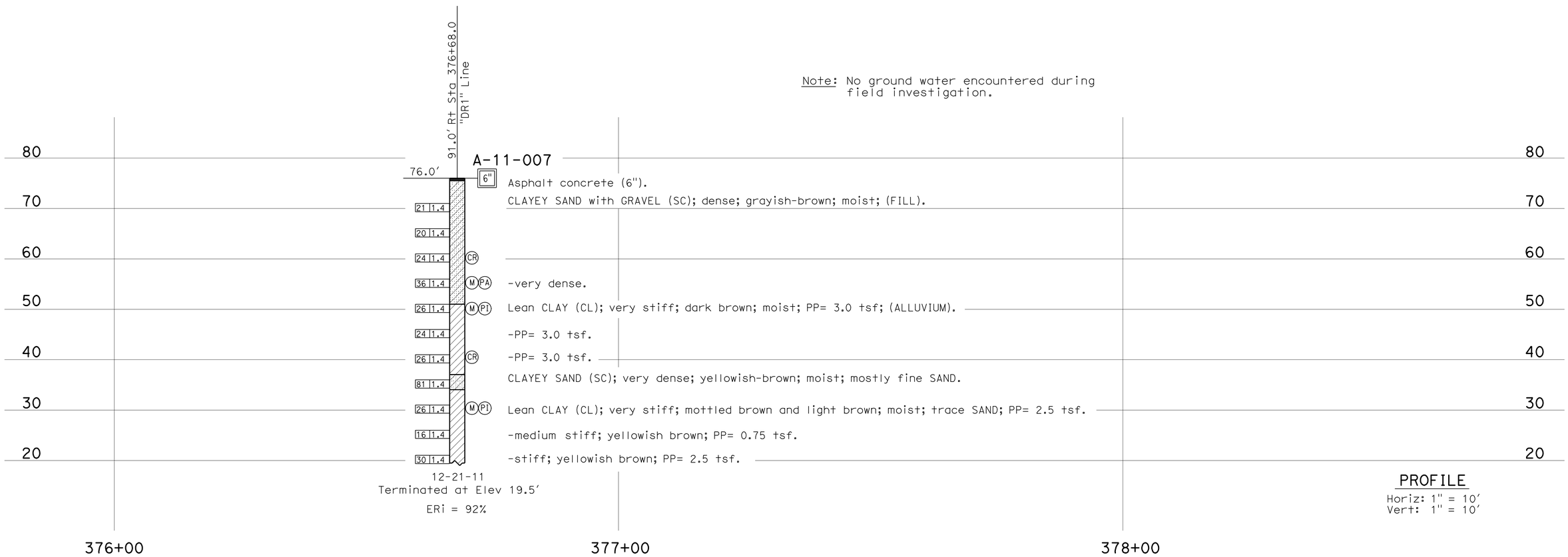

PROFILE
Horiz: 1" = 10′
Vert: 1" = 10′

ENGINEERING SERVICES	MATERIALS AND GEOTECHNICAL SERVICES	STATE OF CALIFORNIA DEPARTMENT OF TRANSPORTATION	DIVISION OF ENGINEERING SERVICES STRUCTURE DESIGN DESIGN BRANCH 4	BRIDGE NO. 33E-0220 POST MILE M3.6/R6.5	RETAINING WALL NO. 1 LOG OF TEST BORINGS 1 OF 4
FUNCTIONAL SUPERVISOR NAME: T. Pokrywka	DRAWN BY: F. Nguyen CHECKED BY: T. Nguyen	FIELD INVESTIGATION BY: D. Nesbitt/J. Moore			

OGS CIVIL LOG OF TEST BORINGS SHEET

ORIGINAL SCALE IN INCHES FOR REDUCED PLANS 0 1 2 3

UNIT: 3643
PROJECT NUMBER & PHASE: 04120005280 CONTRACT NO.: 04-4G1001

DISREGARD PRINTS BEARING EARLIER REVISION DATES

REVISION DATES: 03-13-12 04-24-12 04-26-12

SHEET 13 OF 16

FILE => 33e0220-z-lotb01of4.dgn

USERNAME => s124496 DATE PLOTTED => 02-JUL-2012 TIME PLOTTED => 13:35

DIST	COUNTY	ROUTE	POST MILES TOTAL PROJECT	SHEET No.	TOTAL SHEETS
04	Ala	680	M3.6/R6.5	161	163

M. Momenzadeh. 4-27-12
REGISTERED PROFESSIONAL ENGINEER DATE

6-18-12
PLANS APPROVAL DATE

REGISTERED PROFESSIONAL ENGINEER
Mahmood Momenzadeh
No. GE2685
Exp. 12-31-13
Geotechnical
STATE OF CALIFORNIA

The State of California or its officers or agents shall not be responsible for the accuracy or completeness of electronic copies of this plan sheet.

CEMENTATION

Description	Criteria
Weak	Crumbles or breaks with handling or little finger pressure.
Moderate	Crumbles or breaks with considerable finger pressure.
Strong	Will not crumble or break with finger pressure.

BOREHOLE IDENTIFICATION

Symbol	Hole Type	Description
Size	A	Auger Boring (hollow or solid stem bucket)
Size	R RW RC P	Rotary drilled boring (conventional) Rotary drilled with self-casing wire-line Rotary core with continuously-sampled, self-casing wire-line Rotary percussion boring (air)
Size	R RC	Rotary drilled diamond core Rotary drilled rock core
Size	HD HA	Hand driven (1-inch soil tube) Hand Auger
●	D	Dynamic Cone Penetration Boring
▲	CPT	Cone Penetration Test (ASTM D 5778)
⬚	O	Other (note on LOTB)

Note: Size in inches.

CONSISTENCY OF COHESIVE SOILS

Description	Shear Strength (tsf)	Pocket Penetrometer Measurement, PP, (tsf)	Torvane Measurement, TV, (tsf)	Vane Shear Measurement, VS, (tsf)
Very Soft	Less than 0.12	Less than 0.25	Less than 0.12	Less than 0.12
Soft	0.12 - 0.25	0.25 - 0.5	0.12 - 0.25	0.12 - 0.25
Medium Stiff	0.25 - 0.5	0.5 - 1	0.25 - 0.5	0.25 - 0.5
Stiff	0.5 - 1	1 - 2	0.5 - 1	0.5 - 1
Very Stiff	1 - 2	2 - 4	1 - 2	1 - 2
Hard	Greater than 2	Greater than 4	Greater than 2	Greater than 2

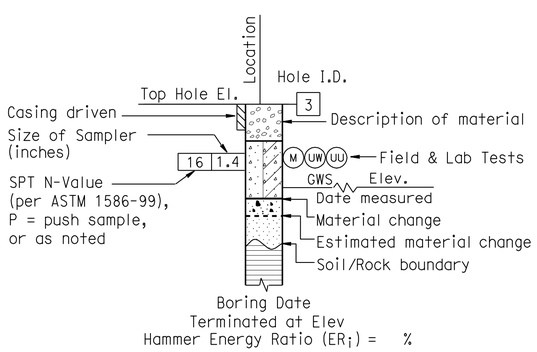

ROTARY BORING

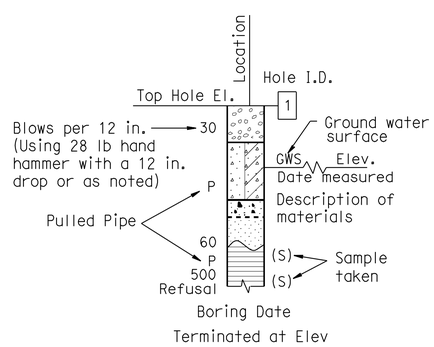

HAND BORING

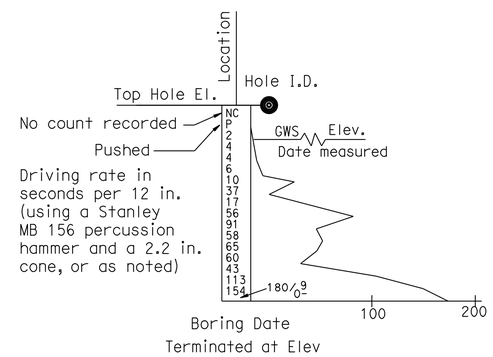

DYNAMIC CONE PENETRATION BORING

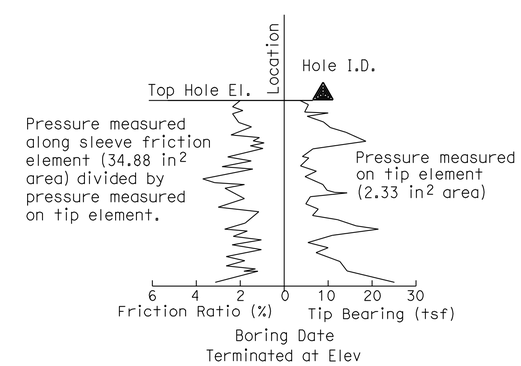

CONE PENETRATION TEST (CPT) BORING

ENGINEERING SERVICES	MATERIALS AND GEOTECHNICAL SERVICES	STATE OF CALIFORNIA DEPARTMENT OF TRANSPORTATION	DIVISION OF ENGINEERING SERVICES STRUCTURE DESIGN DESIGN BRANCH 4	BRIDGE NO. 33E-0220 / POST MILE M3.6/R6.5	RETAINING WALL NO. 1 LOG OF TEST BORINGS 2 OF 4
	PREPARED BY: F. Nguyen				

GS LOTB SOIL LEGEND

ORIGINAL SCALE IN INCHES FOR REDUCED PLANS 0 1 2 3

UNIT: 3643
PROJECT NUMBER & PHASE: 04120005280 CONTRACT NO.: 04-4G1001

DISREGARD PRINTS BEARING EARLIER REVISION DATES → REVISION DATES 04-26-12 04-26-12

SHEET 14 OF 16

FILE => 33e0220-z-lotb02of4.dgn

USERNAME => s124496 DATE PLOTTED => 02-JUL-2012 TIME PLOTTED => 13:35

DIST	COUNTY	ROUTE	POST MILES TOTAL PROJECT	SHEET No.	TOTAL SHEETS
04	Ala	680	M3.6/R6.5	162	163

M. Momenzadeh. 4-27-12
REGISTERED PROFESSIONAL ENGINEER DATE

6-18-12
PLANS APPROVAL DATE

REGISTERED PROFESSIONAL ENGINEER Mahmood Momenzadeh No. GE2685 Exp. 12-31-13 Geotechnical STATE OF CALIFORNIA

The State of California or its officers or agents shall not be responsible for the accuracy or completeness of electronic copies of this plan sheet.

REFERENCE: CALTRANS SOIL & ROCK LOGGING, CLASSIFICATION, AND PRESENTATION MANUAL (2010)

GROUP SYMBOLS AND NAMES

Graphic/Symbol	Group Names	Graphic/Symbol	Group Names
GW	Well-graded GRAVEL Well-graded GRAVEL with SAND	CL	Lean CLAY Lean CLAY with SAND Lean CLAY with GRAVEL SANDY lean CLAY SANDY lean CLAY with GRAVEL GRAVELLY lean CLAY GRAVELLY lean CLAY with SAND
GP	Poorly-graded GRAVEL Poorly-graded GRAVEL with SAND		
GW-GM	Well-graded GRAVEL with SILT Well-graded GRAVEL with SILT and SAND	CL-ML	SILTY CLAY SILTY CLAY with SAND SILTY CLAY with GRAVEL SANDY SILTY CLAY SANDY SILTY CLAY with GRAVEL GRAVELLY SILTY CLAY GRAVELLY SILTY CLAY with SAND
GW-GC	Well-graded GRAVEL with CLAY (or SILTY CLAY) Well-graded GRAVEL with CLAY and SAND (or SILTY CLAY and SAND)		
GP-GM	Poorly-graded GRAVEL with SILT Poorly-graded GRAVEL with SILT and SAND	ML	SILT SILT with SAND SILT with GRAVEL SANDY SILT SANDY SILT with GRAVEL GRAVELLY SILT GRAVELLY SILT with SAND
GP-GC	Poorly-graded GRAVEL with CLAY (or SILTY CLAY) Poorly-graded GRAVEL with CLAY and SAND (or SILTY CLAY and SAND)		
GM	SILTY GRAVEL SILTY GRAVEL with SAND	OL	ORGANIC lean CLAY ORGANIC lean CLAY with SAND ORGANIC lean CLAY with GRAVEL SANDY ORGANIC lean CLAY SANDY ORGANIC lean CLAY with GRAVEL GRAVELLY ORGANIC lean CLAY GRAVELLY ORGANIC lean CLAY with SAND
GC	CLAYEY GRAVEL CLAYEY GRAVEL with SAND		
GC-GM	SILTY, CLAYEY GRAVEL SILTY, CLAYEY GRAVEL with SAND	OL	ORGANIC SILT ORGANIC SILT with SAND ORGANIC SILT with GRAVEL SANDY ORGANIC SILT SANDY ORGANIC SILT with GRAVEL GRAVELLY ORGANIC SILT GRAVELLY ORGANIC SILT with SAND
SW	Well-graded SAND Well-graded SAND with GRAVEL		
SP	Poorly-graded SAND Poorly-graded SAND with GRAVEL	CH	Fat CLAY Fat CLAY with SAND Fat CLAY with GRAVEL SANDY fat CLAY SANDY fat CLAY with GRAVEL GRAVELLY fat CLAY GRAVELLY fat CLAY with SAND
SW-SM	Well-graded SAND with SILT Well-graded SAND with SILT and GRAVEL		
SW-SC	Well-graded SAND with CLAY (or SILTY CLAY) Well-graded SAND with CLAY and GRAVEL (or SILTY CLAY and GRAVEL)	MH	Elastic SILT Elastic SILT with SAND Elastic SILT with GRAVEL SANDY elastic SILT SANDY elastic SILT with GRAVEL GRAVELLY elastic SILT GRAVELLY elastic SILT with SAND
SP-SM	Poorly-graded SAND with SILT Poorly-graded SAND with SILT and GRAVEL		
SP-SC	Poorly-graded SAND with CLAY (or SILTY CLAY) Poorly-graded SAND with CLAY and GRAVEL (or SILTY CLAY and GRAVEL)	OH	ORGANIC fat CLAY ORGANIC fat CLAY with SAND ORGANIC fat CLAY with GRAVEL SANDY ORGANIC fat CLAY SANDY ORGANIC fat CLAY with GRAVEL GRAVELLY ORGANIC fat CLAY GRAVELLY ORGANIC fat CLAY with SAND
SM	SILTY SAND SILTY SAND with GRAVEL		
SC	CLAYEY SAND CLAYEY SAND with GRAVEL	OH	ORGANIC elastic SILT ORGANIC elastic SILT with SAND ORGANIC elastic SILT with GRAVEL SANDY ORGANIC elastic SILT SANDY ORGANIC elastic SILT with GRAVEL GRAVELLY ORGANIC elastic SILT GRAVELLY ORGANIC elastic SILT with SAND
SC-SM	SILTY, CLAYEY SAND SILTY, CLAYEY SAND with GRAVEL		
PT	PEAT	OL/OH	ORGANIC SOIL ORGANIC SOIL with SAND ORGANIC SOIL with GRAVEL SANDY ORGANIC SOIL SANDY ORGANIC SOIL with GRAVEL GRAVELLY ORGANIC SOIL GRAVELLY ORGANIC SOIL with SAND
	COBBLES COBBLES and BOULDERS BOULDERS		

FIELD AND LABORATORY TESTING

- (C) Consolidation (ASTM D 2435)
- (CL) Collapse Potential (ASTM D 5333)
- (CP) Compaction Curve (CTM 216)
- (CR) Corrosivity Testing (CTM 643, CTM 422, CTM 417)
- (CU) Consolidated Undrained Triaxial (ASTM D 4767)
- (DS) Direct Shear (ASTM D 3080)
- (EI) Expansion Index (ASTM D 4829)
- (M) Moisture Content (ASTM D 2216)
- (OC) Organic Content-% (ASTM D 2974)
- (P) Permeability (CTM 220)
- (PA) Particle Size Analysis (ASTM D 422)
- (PI) Plasticity Index (AASHTO T 90) Liquid Limit (AASHTO T 89)
- (PL) Point Load Index (ASTM D 5731)
- (PM) Pressure Meter
- (R) R-Value (CTM 301)
- (SE) Sand Equivalent (CTM 217)
- (SG) Specific Gravity (AASHTO T 100)
- (SL) Shrinkage Limit (ASTM D 427)
- (SW) Swell Potential (ASTM D 4546)
- (UC) Unconfined Compression-Soil (ASTM D 2166) Unconfined Compression-Rock (ASTM D 2938)
- (UU) Unconsolidated Undrained Triaxial (ASTM D 2850)
- (UW) Unit Weight (ASTM D 4767)

APPARENT DENSITY OF COHESIONLESS SOILS

Description	SPT N_{60} (Blows / 12 in.)
Very Loose	0 - 5
Loose	5 - 10
Medium Dense	10 - 30
Dense	30 - 50
Very Dense	Greater than 50

MOISTURE

Description	Criteria
Dry	No discernable moisture
Moist	Moisture present, but no free water
Wet	Visible free water

PERCENT OR PROPORTION OF SOILS

Description	Criteria
Trace	Particles are present but estimated to be less than 5%
Few	5% - 10%
Little	15% - 25%
Some	30% - 45%
Mostly	50% - 100%

PARTICLE SIZE

Description		Size (in.)
Boulder		Greater than 12
Cobble		3 - 12
Gravel	Coarse	3/4 - 3
	Fine	1/5 - 3/4
Sand	Coarse	1/16 - 1/5
	Medium	1/64 - 1/16
	Fine	1/300 - 1/64
Silt and Clay		Less than 1/300

ENGINEERING SERVICES

MATERIALS AND GEOTECHNICAL SERVICES
PREPARED BY: F. Nguyen

STATE OF CALIFORNIA
DEPARTMENT OF TRANSPORTATION

DIVISION OF ENGINEERING SERVICES
STRUCTURE DESIGN
DESIGN BRANCH 4

BRIDGE NO. 33E-0220
POST MILE M3.6/R6.5

RETAINING WALL NO. 1
LOG OF TEST BORINGS 3 OF 4

GS LOTB SOIL LEGEND

ORIGINAL SCALE IN INCHES FOR REDUCED PLANS 0 1 2 3

UNIT: 3643
PROJECT NUMBER & PHASE: 04120005280
CONTRACT NO.: 04-4G1001

DISREGARD PRINTS BEARING EARLIER REVISION DATES

REVISION DATES: 04-24-12 04-26-12

SHEET 15 OF 16

FILE => 33e0220-z-lotb03of4.dgn

USERNAME => s124496 DATE PLOTTED => 02-JUL-2012 TIME PLOTTED => 13:35

FED. ROAD DIST. NO.	STATE	PROJ. No.	FISCAL YEAR	SHEET NO.	TOTAL SHEETS
7	CAL				

TO ACCOMPANY PLANS DATED 6-18-12

DIVISION OF ENGINEERING SERVICES - MATERIALS AND GEOTECHNICAL SERVICES

As-Built Log of Test Borings sheet is considered an informational document only. As such, the State of California registration seal with signature, license number and registration certificate expiration date confirm that this is a true and accurate copy of the original document. It does not attest to the accuracy or validity of the information contained in the original document. This drawing is available and presented only for the convenience of any bidder, contractor or other interested party.

DIST.	COUNTY	ROUTE	POST MILE-TOTAL PROJECT	Sheet No.	Total Sheets
04	Ala	680	M3.6/R6.5	163	163

M. Momenzadeh. 4-27-12
REGISTERED GEOTECHNICAL ENGINEER DATE

REGISTERED PROFESSIONAL ENGINEER Mahmood Momenzadeh No. GE2685 Exp. 12-31-13 GEOTECHNICAL STATE OF CALIFORNIA

RETAINING WALL NO. 1

LOG OF TEST BORINGS 4 OF 4

UNIT: 3643	CONTRACT No.	BRIDGE No.
PROJ. No. & PHASE: 04120005280	04-4G1001	

AS-BUILT VERT DATUM: CONVERSION: Sheet 16 of 16

NOTE: A COPY OF THIS LOG OF TEST BORINGS IS AVAILABLE AT OFFICE OF STRUCTURE MAINTENANCE AND INVESTIGATIONS, SACRAMENTO, CALIFORNIA

DIST.	COUNTY	ROUTE	P.M.	SHEET NO.	TOTAL SHEETS
04	Ala	680	M7.2/R6.4	314	363

ENGINEER IN RESPONSIVE CIVIL ENGINEER EXPIRES

DATE APPROVED April 22, 1968

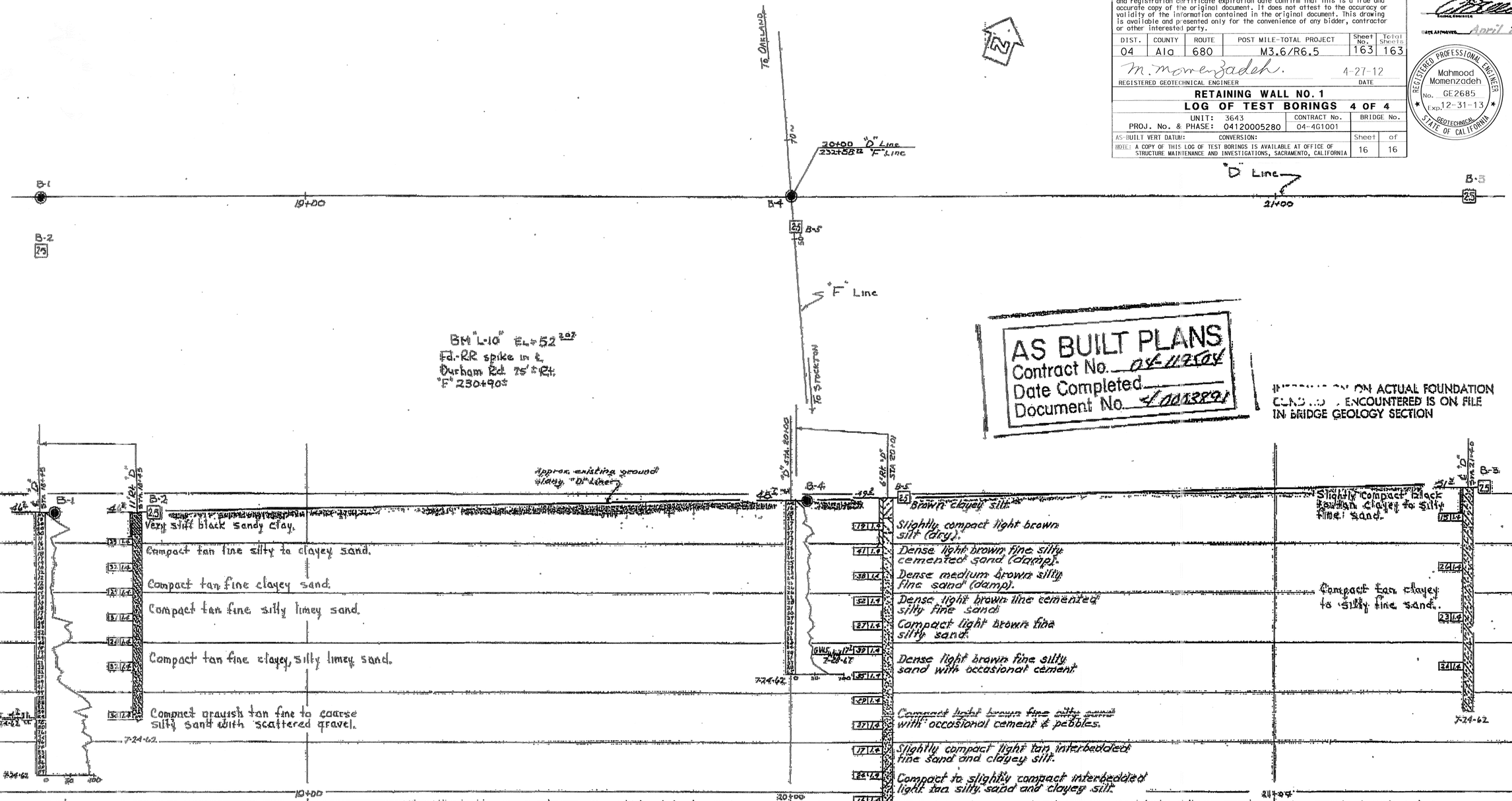

BRIDGE DEPARTMENT

CHECKED

CLASSIFICATION OF MATERIAL BASED ON STANDARD GRADE SIZE LIMITS

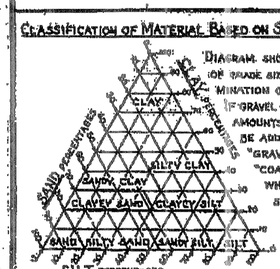

DIAGRAM SHOWING THE BASIS FOR ESTIMATES OF GRADE SIZE DISTRIBUTION USED IN DETERMINATION OF CLASS NAMES. IF GRAVEL IS PRESENT IN APPRECIABLE AMOUNTS THE TERM "GRAVELLY" MAY BE ADDED TO THE CLASS NAME, VIZ. "GRAVELLY SAND". THE TERMS "COARSE", "MEDIUM" AND "FINE" WHEN USED TO DESCRIBE SAND, SILT AND GRAVEL, REFER TO STANDARD GRADE SIZE LIMITS.

LEGEND OF EARTH MATERIALS

- GRAVEL
- SAND
- SILT
- CLAY
- SANDY CLAY OR CLAYEY SAND
- SANDY SILT OR SILTY SAND
- SILTY CLAY OR CLAYEY SILT
- PEAT AND/OR ORGANIC MATTER
- FILL MATERIAL
- IGNEOUS ROCK
- SEDIMENTARY ROCK
- METAMORPHIC ROCK

LEGEND OF BORING OPERATIONS

- PENETROMETER
- 2½" CONE PENETROMETER
- SAMPLER BORING (DRY)
- ROTARY BORING (WET)
- AUGER BORING (DRY)
- JET BORING
- CORE BORING
- TEST PIT

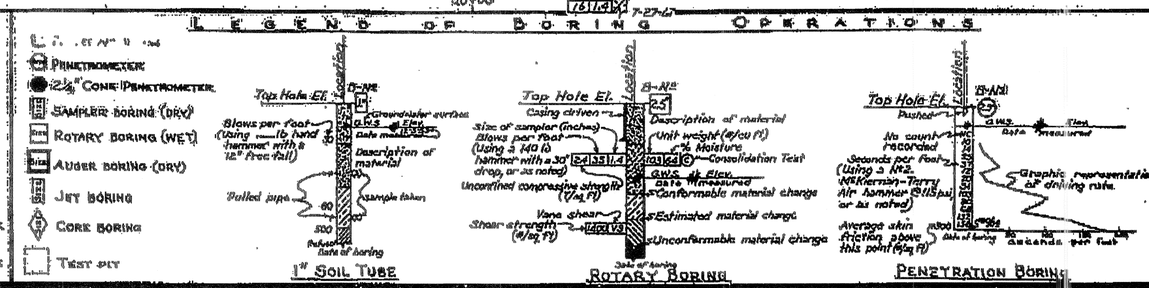

NOTE

Classification of earth material as shown on this sheet is based upon field inspection and is not to be construed to imply mechanical analysis.

10 of 10

STATE OF CALIFORNIA
DEPARTMENT OF PUBLIC WORKS
DIVISION OF HIGHWAYS

DURHAM ROAD O.C.

LOG OF TEST BORINGS

SCALE 1"=10' | BRIDGE 33-368 | FILE | DRAWING 33368-1F

WO 119501
CU 04204

314

FILENAME => 33e0220-z-1tb04of4.tif