| Dist | COUNTY | ROUTE | POST MILES TOTAL PROJECT | SHEET No. | TOTAL SHEETS |
|---|---|---|---|---|---|
| 04 | Ala | 80 | 6.2/6.4 | 1 | 13 |

INDEX OF PLANS


| SHEET No. | DESCRIPTION |
|---|---|
| 1 | TITLE SHEET AND LOCATION MAP |
| 2 | LAYOUT |
| 3 | TEMPORARY WATER POLLUTION CONTROL QUANTITIES |
| 4 | UTILITY PLAN |
| 5 | CONSTRUCTION AREA SIGNS |
| 6 | SUMMARY OF QUANTITIES |
| 7-8 | PLANT LEGEND, QUANTITIES AND PLAN |
| 9-10 | EROSION CONTROL LEGEND, QUANTITIES AND PLAN |
| 11-13 | REVISED STANDARD PLANS |


THE STANDARD PLANS LIST APPLICABLE TO THIS CONTRACT IS INCLUDED IN THE NOTICE TO BIDDERS AND SPECIAL PROVISIONS BOOK.

STATE OF CALIFORNIA

# DEPARTMENT OF TRANSPORTATION

## PROJECT PLANS FOR CONSTRUCTION ON

# STATE HIGHWAY

## IN ALAMEDA COUNTY
## IN BERKELEY
## FROM 0.4 MILE TO 0.2 MILE SOUTH OF GILMAN STREET UNDERCROSSING

TO BE SUPPLEMENTED BY STANDARD PLANS DATED 2010

LOCATION MAP

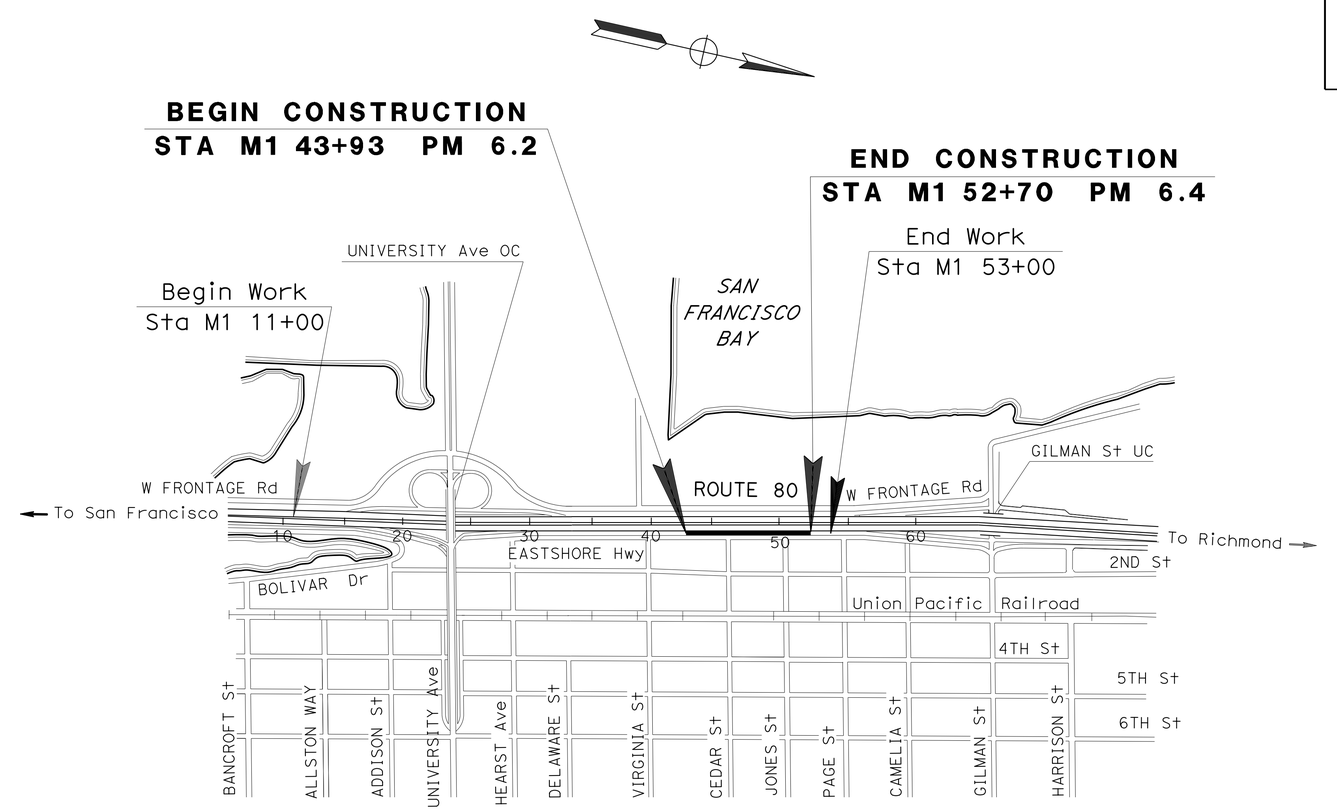


**BERKELEY**

NO SCALE

THE CONTRACTOR SHALL POSSESS THE CLASS (OR CLASSES) OF LICENSE AS SPECIFIED IN THE "NOTICE TO BIDDERS."

PROJECT MANAGER: JACK SIAUW

DESIGN MANAGER: JAIME GUTIERREZ

Gabriel A Tcruz 3/17/14
PROJECT ENGINEER DATE
REGISTERED CIVIL ENGINEER

March 24, 2014
PLANS APPROVAL DATE

REGISTERED PROFESSIONAL ENGINEER — Gabriel Tcruz — No. 68108 — Exp. 6-30-15 — CIVIL — STATE OF CALIFORNIA

*THE STATE OF CALIFORNIA OR ITS OFFICERS OR AGENTS SHALL NOT BE RESPONSIBLE FOR THE ACCURACY OR COMPLETENESS OF SCANNED COPIES OF THIS PLAN SHEET.*

| | |
|---|---|
| CONTRACT No. | 04-4A8204 |
| PROJECT ID | 0400020931 |

LAST REVISION 03-17-14
DATE PLOTTED => 01-APR-2014
TIME PLOTTED => 13:15

| Dist | COUNTY | ROUTE | POST MILES TOTAL PROJECT | SHEET No. | TOTAL SHEETS |
|---|---|---|---|---|---|
| 04 | Ala | 80 | 6.2/6.4 | 2 | 13 |

Gabriel A Tcruz 3/17/14
REGISTERED CIVIL ENGINEER DATE

3-24-14
PLANS APPROVAL DATE

REGISTERED PROFESSIONAL ENGINEER — Gabriel Tcruz — No. 68108 — Exp 6-30-15 — CIVIL — STATE OF CALIFORNIA

*THE STATE OF CALIFORNIA OR ITS OFFICERS OR AGENTS SHALL NOT BE RESPONSIBLE FOR THE ACCURACY OR COMPLETENESS OF SCANNED COPIES OF THIS PLAN SHEET.*

**NOTE:**

FOR ACCURATE RIGHT OF WAY DATA, CONTACT RIGHT OF WAY ENGINEERING AT THE DISTRICT OFFICE.

**LEGEND:**

ROADWAY EXCAVATION (TYPE Z-2)

TEMPORARY FENCE (TYPE ESA)

**ABBREVIATIONS:**

| | |
|---|---|
| VASS | VARIABLE ADVISORY SPEED SIGN |
| VMS | VARIABLE MESSAGE SIGN |
| w/ | WITH |

**NOTES:**

1. COORDINATE VALUES SHOWN ARE BASED ON THE CALIFORNIA COORDINATE SYSTEM OF 1983, ZONE 3.
2. FOR EROSION CONTROL LIMITS AND DETAILS, SEE EC SHEETS.
3. PLACE LEAD END OF Temp RAILING (TYPE K) w/ TRAFFIC SCREEN 4' BEHIND FACE OF MBGR.

# BERKELEY

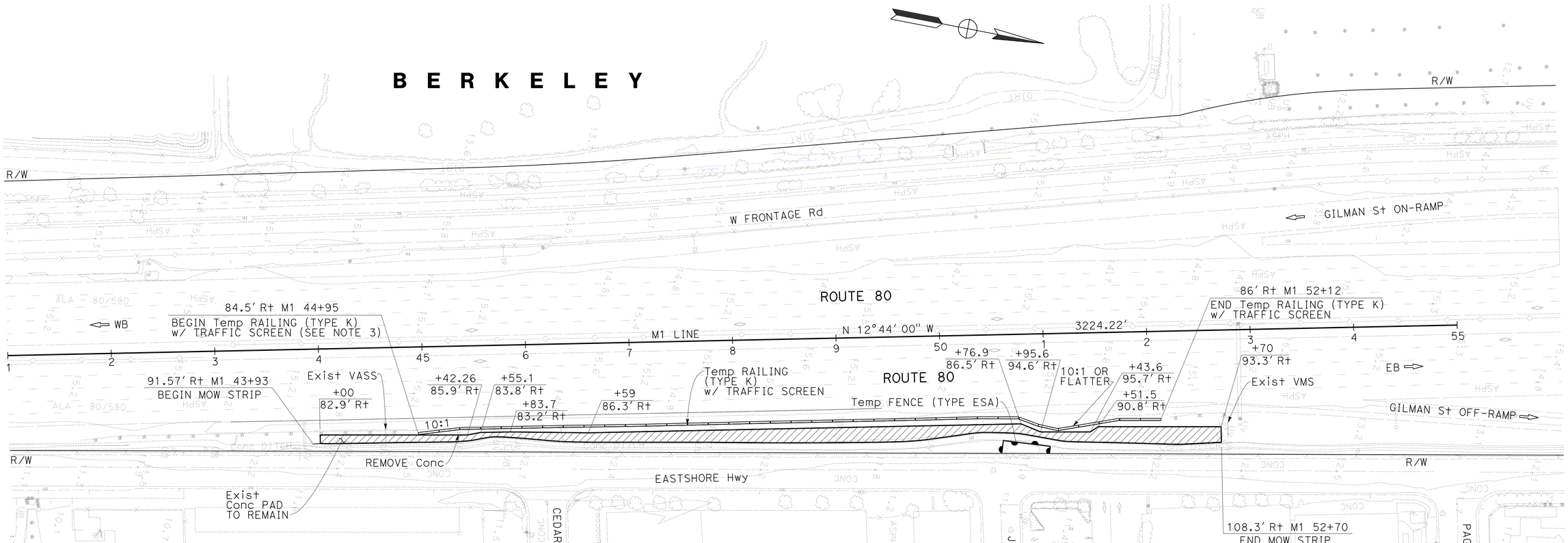


**PLAN**
SCALE: 1"=50'

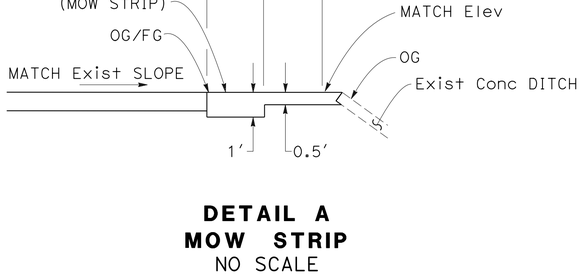


**DETAIL A**
**MOW STRIP**
NO SCALE

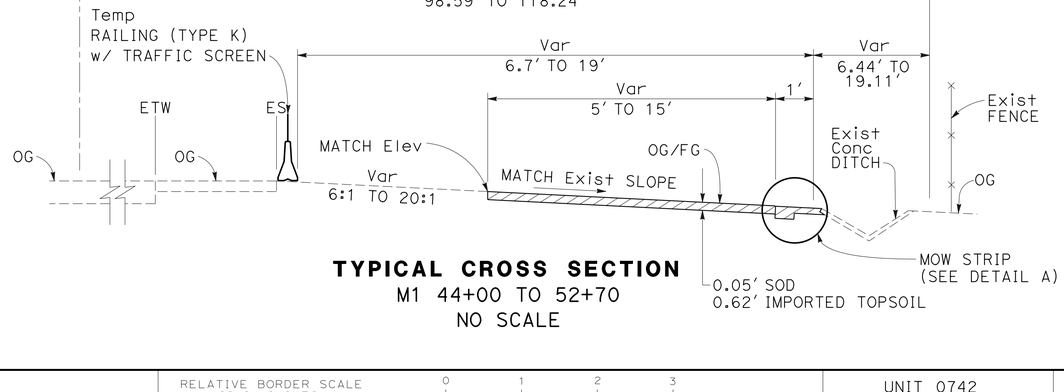


**TYPICAL CROSS SECTION**
M1 44+00 TO 52+70
NO SCALE

**LAYOUT**
SCALE: AS SHOWN

**L-1**

STATE OF CALIFORNIA - DEPARTMENT OF TRANSPORTATION
Caltrans®
DESIGN
FUNCTIONAL SUPERVISOR: JAIME GUTIERREZ
CALCULATED-DESIGNED BY: ESMAELI NEMATI
CHECKED BY: GABRIEL TCRUZ
REVISED BY: GT
DATE REVISED: 3/17/14

LAST REVISION | DATE PLOTTED => 01-APR-2014
03-17-14 | TIME PLOTTED => 13:15

BORDER LAST REVISED 2/12013

USERNAME => s126849
DGN FILE => 0400020931ea001.dgn

RELATIVE BORDER SCALE IS IN INCHES 0 1 2 3

UNIT 0742

PROJECT NUMBER & PHASE 04000209311

| Dist | COUNTY | ROUTE | POST MILES TOTAL PROJECT | SHEET No. | TOTAL SHEETS |
|---|---|---|---|---|---|
| 04 | Ala | 80 | 6.2/6.4 | 3 | 13 |

3/17/14
REGISTERED CIVIL ENGINEER DATE

3-24-14
PLANS APPROVAL DATE

REGISTERED PROFESSIONAL ENGINEER
Jiangfan Chen
No. 77248
Exp. 6-30-15
CIVIL
STATE OF CALIFORNIA

THE STATE OF CALIFORNIA OR ITS OFFICERS OR AGENTS SHALL NOT BE RESPONSIBLE FOR THE ACCURACY OR COMPLETENESS OF SCANNED COPIES OF THIS PLAN SHEET.

## TEMPORARY WATER POLLUTION CONTROL QUANTITIES

| ITEM | UNIT | STATION | QUANTITY |
|---|---|---|---|
| TEMPORARY CHECK DAM | LF | M1 43+93 TO 52+70 | 30 |
| TEMPORARY DRAINAGE INLET PROTECTION | EA | M1 43+93 TO 52+70 | 3 |
| TEMPORARY CONSTRUCTION ENTRANCE | | M1 43+93 TO 52+70 | 2 |
| TEMPORARY COVER | SQYD | M1 43+93 TO 52+70 | 500 |

CALCULATED-DESIGNED BY: JIANGFAN CHEN
CHECKED BY: KAMRAN NAKHJIRI
REVISED BY: JC
DATE REVISED: 3/17/14
FUNCTIONAL SUPERVISOR: KAMRAN NAKHJIRI

STATE OF CALIFORNIA - DEPARTMENT OF TRANSPORTATION
Caltrans®
WATER QUALITY

TEMPORARY WATER POLLUTION CONTROL QUANTITIES

WPCQ-1

LAST REVISION | DATE PLOTTED => 01-APR-2014
03-17-14 | TIME PLOTTED => 13:15

BORDER LAST REVISED 2/1/2013
USERNAME => s126849
DGN FILE => 04000209311gd001.dgn
RELATIVE BORDER SCALE IS IN INCHES 0 1 2 3
UNIT 0742
PROJECT NUMBER & PHASE 04000209311

NOTE:

1. FOR ACCURATE RIGHT OF WAY DATA, CONTACT RIGHT OF WAY ENGINEERING AT THE DISTRICT OFFICE.

**NOTE:**

1. LOCATION OF UTILITY FACILITIES SHOWN ON UTILITY PLAN IS APPROXIMATE AND SHALL BE VERIFIED BY THE CONTRACTOR BEFORE CONSTRUCTION.

| Dist | COUNTY | ROUTE | POST MILES TOTAL PROJECT | SHEET No. | TOTAL SHEETS |
|---|---|---|---|---|---|
| 04 | Ala | 80 | 6.2/6.4 | 4 | 13 |

REGISTERED CIVIL ENGINEER — DATE 3/17/14

Cheuk Hong Wong No. 60145 Exp 6-30-14 CIVIL — REGISTERED PROFESSIONAL ENGINEER — STATE OF CALIFORNIA

PLANS APPROVAL DATE 3-24-14

THE STATE OF CALIFORNIA OR ITS OFFICERS OR AGENTS SHALL NOT BE RESPONSIBLE FOR THE ACCURACY OR COMPLETENESS OF SCANNED COPIES OF THIS PLAN SHEET.

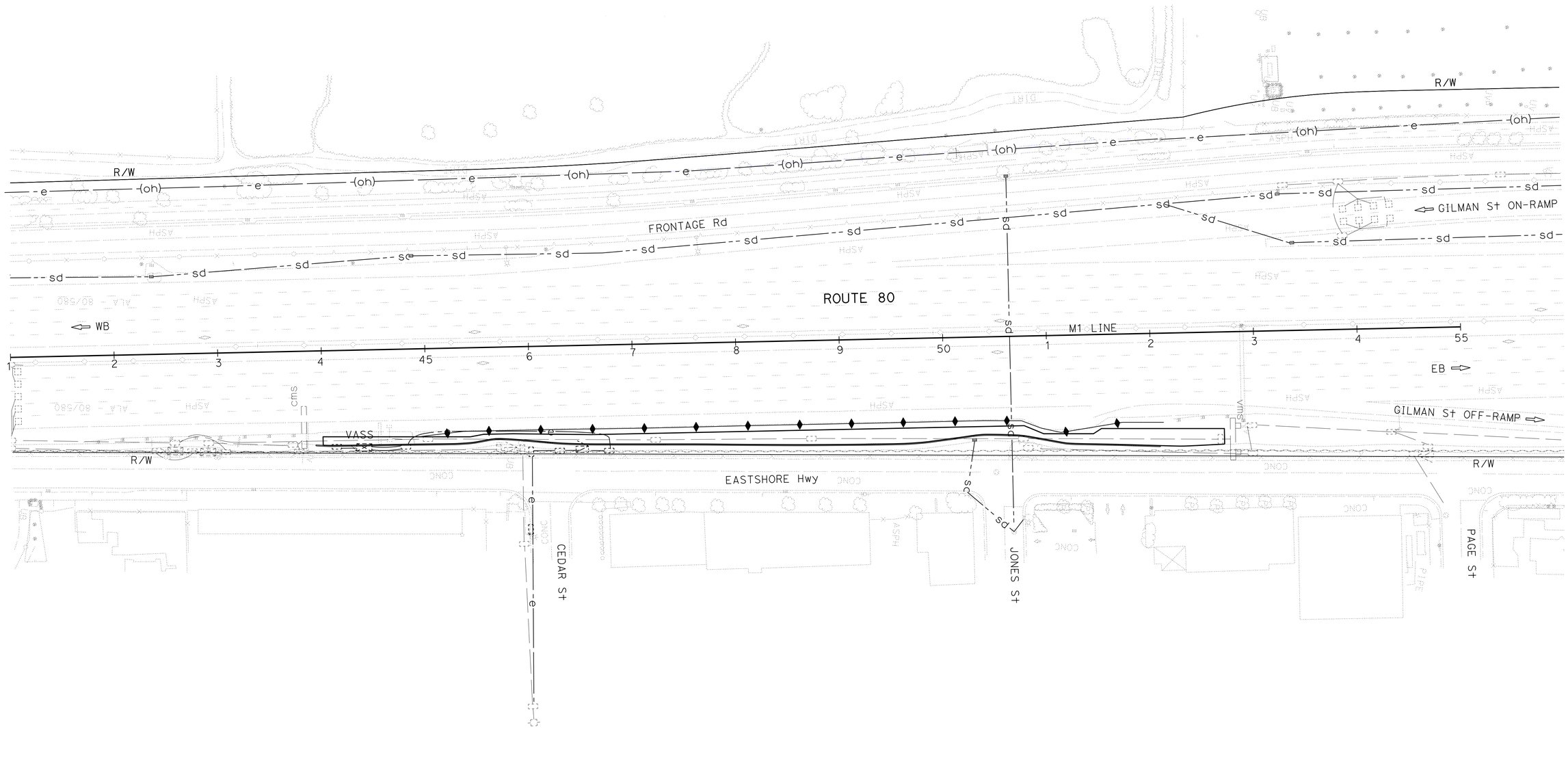


# UTILITY PLAN

SCALE: 1" = 50'

U-1

*APPROVED FOR UTILITY INFORMATION ONLY*

HW 3/17/14 — REVISED BY / DATE REVISED

HONG WONG — CALCULATED-DESIGNED BY

THOMAS HOKTCHEU — CHECKED BY

SID PAWAR — FUNCTIONAL SUPERVISOR

STATE OF CALIFORNIA - DEPARTMENT OF TRANSPORTATION — DESIGN

LAST REVISION 03-17-14 | DATE PLOTTED => 01-APR-2014 | TIME PLOTTED => 13:15

BORDER LAST REVISED 2/1/2013 | USERNAME => s126849 | DGN FILE => 0400020931ka001.dgn | RELATIVE BORDER SCALE IS IN INCHES 0 1 2 3 | UNIT 0742 | PROJECT NUMBER & PHASE 04000209311

| Dist | COUNTY | ROUTE | POST MILES TOTAL PROJECT | SHEET No. | TOTAL SHEETS |
|---|---|---|---|---|---|
| 04 | Ala | 80 | 6.2/6.4 | 5 | 13 |

Claudia K Fang 3/17/14
REGISTERED CIVIL ENGINEER DATE

3-24-14
PLANS APPROVAL DATE

REGISTERED PROFESSIONAL ENGINEER
Claudia K. Fang
No. 80493
Exp. 3-31-15
CIVIL
STATE OF CALIFORNIA

THE STATE OF CALIFORNIA OR ITS OFFICERS OR AGENTS SHALL NOT BE RESPONSIBLE FOR THE ACCURACY OR COMPLETENESS OF SCANNED COPIES OF THIS PLAN SHEET.

**NOTE:**

1. EXACT SIGN LOCATIONS AND POSITIONS TO BE DETERMINED BY THE ENGINEER.

**LEGEND:**

[ ] CONSTRUCTION AREA SIGN LETTER

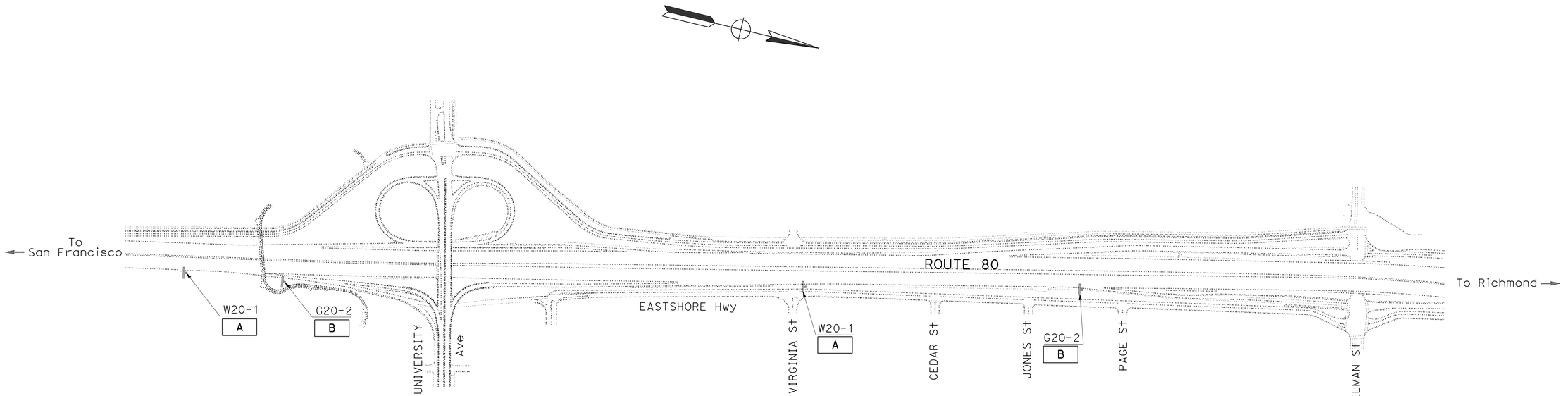


## STATIONARY MOUNTED CONSTRUCTION AREA SIGNS

| SIGN CODE [ ] | MUTCD CODE | PANEL SIZE | SIGN MESSAGE | NUMBER OF POSTS AND SIZE | NUMBER OF SIGN [N] |
|---|---|---|---|---|---|
| A | W20-1 | 48" x 48" | ROAD WORK AHEAD | 1 - 4" x 6" | 2 |
| B | G20-2 | 48" x 24" | END ROAD WORK | 1 - 4" x 4" | 2 |

[N] NOT A SEPARATE PAY ITEM, FOR INFORMATION ONLY

# CONSTRUCTION AREA SIGNS

NO SCALE

*APPROVED FOR CONSTRUCTION AREA SIGN WORK ONLY*

**CS-1**

STATE OF CALIFORNIA - DEPARTMENT OF TRANSPORTATION
Caltrans
TRAFFIC

FUNCTIONAL SUPERVISOR: LOURDES DAVID
CALCULATED-DESIGNED BY: CLAUDIA FANG
CHECKED BY: JERI-PAUL FABIAN
REVISED BY: CF
DATE REVISED: 3/17/14

LAST REVISION DATE PLOTTED => 01-APR-2014
TIME PLOTTED => 13:15
03-17-14

BORDER LAST REVISED 2/1/2013
USERNAME => s126849
DGN FILE => 04000209311a001.dgn
RELATIVE BORDER SCALE IS IN INCHES 0 1 2 3
UNIT 0835
PROJECT NUMBER & PHASE 04000209311

| Dist | COUNTY | ROUTE | POST MILES TOTAL PROJECT | SHEET No. | TOTAL SHEETS |
|---|---|---|---|---|---|
| 04 | Ala | 80 | 6.2/6.4 | 6 | 13 |

Gabriel A Tcruz 3/17/14
REGISTERED CIVIL ENGINEER DATE

3-24-14
PLANS APPROVAL DATE

REGISTERED PROFESSIONAL ENGINEER
Gabriel Tcruz
No. 68108
Exp 6-30-15
CIVIL
STATE OF CALIFORNIA

THE STATE OF CALIFORNIA OR ITS OFFICERS OR AGENTS SHALL NOT BE RESPONSIBLE FOR THE ACCURACY OR COMPLETENESS OF SCANNED COPIES OF THIS PLAN SHEET.

## ROADWAY EXCAVATION (TYPE Z-2) (AERIALLY DEPOSITED LEAD)

| LOCATION | CY | DEPTH (IN) [N] |
|---|---|---|
| R† M1 43+93 TO 52+08 | 263 | 8 |
| TOTAL | 263 | |

[N] NOT A SEPARATE PAY ITEM, FOR INFORMATION ONLY

## TEMPORARY FENCE (TYPE ESA)

| LOCATION | LF |
|---|---|
| R† M1 50+58 TO 51+04 | 64.5 |
| TOTAL | 64.5 |

## TEMPORARY RAILING (TYPE K)

| LOCATION | LF |
|---|---|
| R† M1 44+95 TO 52+12 | 720 |
| TOTAL | 720 |

## MINOR CONCRETE (MOW STRIP)

| LOCATION | CY |
|---|---|
| R† M1 43+93 TO 52+70 | 24.4 |
| TOTAL | 24.4 |

## TEMPORARY TRAFFIC SCREEN

| LOCATION | LF |
|---|---|
| R† M1 44+95 TO 52+12 | 720 |
| TOTAL | 720 |

## REMOVE CONCRETE

| LOCATION | CY |
|---|---|
| R† M1 45+35 | 2 |
| TOTAL | 2 |

# SUMMARY OF QUANTITIES
# Q-1

CALCULATED-DESIGNED BY: GT
CHECKED BY: GABRIEL TCRUZ / RODRIGO PUENTE
REVISED BY: 3/17/14
DATE REVISED:
FUNCTIONAL SUPERVISOR: JAIME GUTIERREZ
STATE OF CALIFORNIA - DEPARTMENT OF TRANSPORTATION
DESIGN

LAST REVISION | DATE PLOTTED => 01-APR-2014
03-17-14 | TIME PLOTTED => 13:15

BORDER LAST REVISED 2/1/2013
USERNAME => s126849
DGN FILE => 0400020931pa001.dgn
RELATIVE BORDER SCALE IS IN INCHES 0 1 2 3
UNIT 0742
PROJECT NUMBER & PHASE 04000209311

| Dist | COUNTY | ROUTE | POST MILES TOTAL PROJECT | SHEET No. | TOTAL SHEETS |
|---|---|---|---|---|---|
| 04 | Ala | 80 | 6.2/6.4 | 7 | 13 |

LICENSED LANDSCAPE ARCHITECT

3-24-14

PLANS APPROVAL DATE

*THE STATE OF CALIFORNIA OR ITS OFFICERS OR AGENTS SHALL NOT BE RESPONSIBLE FOR THE ACCURACY OR COMPLETENESS OF SCANNED COPIES OF THIS PLAN SHEET.*

LICENSED LANDSCAPE ARCHITECT — SALLY BANG No. 5066 — Signature — 11-30-15 — Renewal Date — 3-17-14 — Date — STATE OF CALIFORNIA

# PLANT LEGEND

| PLANT GROUP | PLANT No. | SYMBOL | BOTANICAL NAME | COMMON NAME | SIZE (13) | QUANTITY EACH | HOLE SIZE (INCH) Dia | HOLE SIZE (INCH) DEPTH | BASIN TYPE | IRON SULFATE | SOIL AMENDMENT TYPE | SOIL AMENDMENT RATE | COMMERCIAL FERTILIZER (1) PLANTING | COMMERCIAL FERTILIZER (1) PLT ESTB | BASIN MULCH | STAKING | PLANTING LIMITS MINIMUM DISTANCE (Ft) FROM TRVD WAY | Pvmt | FENCE | WALL | PAVED DITCH | EARTH DITCH | ON CENTER (Ft) | REMARKS |
|---|---|---|---|---|---|---|---|---|---|---|---|---|---|---|---|---|---|---|---|---|---|---|---|---|
| T | 1 | | NASSELLA PULCHRA | PURPLE NEEDLEGRASS | 35-40 | (7) | - | - | - | - | - | - | 6 LB/ 1000 SQFT | 6 LB/ 1000 SQFT | - | - | - | 3 | 1 | 1 | 1 | - | - | SOD (4) |
| | | | FESTUCA RUBRA | MOLATE FESCUE | 35-40 | | | | | | | | | | | | | | | | | | | |
| | | | HORDEUM CALIFORNICUM | CALIFORNIA BARLEY | 10-15 | | | | | | | | | | | | | | | | | | | |
| | | | HORDEUM BRACHYANTHERUM | MEADOW BARLEY | 10-15 | | | | | | | | | | | | | | | | | | | |

**APPLICABLE WHEN CIRCLED:**

(1) - QUANTITIES SHOWN ARE "PER PLANT" UNLESS SHOWN AS SQFT OR SQYD APPLICATION RATES
2 - BASIN MULCH IS INCLUDED WITH MULCH QUANTITIES SHOWN ON PLANTING PLAN
3 - SUFFICIENT TO RECEIVE ROOT BALL AND AMENDMENTS IF REQUIRED
(4) - SEE DETAIL
5 - SEE SPECIAL PROVISIONS
6 - SEE STANDARD SPECIFICATIONS
(7) - AS SHOWN ON PLANS
8 - UNLESS OTHERWISE SHOWN ON PLANS
9 - FOLIAGE PROTECTOR REQUIRED
10 - ROOT PROTECTOR REQUIRED
11 - ROOT BARRIER REQUIRED
12 - STATE-FURNISHED
(13) - PERCENTAGE OF MIX

## CULTIVATION

| LOCATION | CULTIVATE SQYD | WEED GERMINATION SQYD |
|---|---|---|
| STA M1 44+00 TO 52+70 | 1039 | 1039 |
| | | |
| TOTAL | 1039 | 1039 |

## SOD

| LOCATION | QUANTITY SQYD | ORGANIC FERTILIZER LB |
|---|---|---|
| STA M1 44+00 TO 52+70 | 1039 | 56 |
| | | |
| TOTAL | 1039 | 56 |

# PLANT LEGEND AND QUANTITIES

NO SCALE

**PL-1**

STATE OF CALIFORNIA - DEPARTMENT OF TRANSPORTATION — Caltrans® — WATER QUALITY

SENIOR LANDSCAPE ARCHITECT: DAVID YAM

CALCULATED-DESIGNED BY: SALLY BANG — CHECKED BY: ANGELA KWAN

REVISED BY: SB — DATE REVISED: 3/17/14

LAST REVISION 03-17-14 — DATE PLOTTED => 01-APR-2014 — TIME PLOTTED => 13:15

| Dist | COUNTY | ROUTE | POST MILES TOTAL PROJECT | SHEET No. | TOTAL SHEETS |
|---|---|---|---|---|---|
| 04 | Ala | 80 | 6.2/6.4 | 8 | 13 |

LICENSED LANDSCAPE ARCHITECT

3-24-14

PLANS APPROVAL DATE

*THE STATE OF CALIFORNIA OR ITS OFFICERS OR AGENTS SHALL NOT BE RESPONSIBLE FOR THE ACCURACY OR COMPLETENESS OF SCANNED COPIES OF THIS PLAN SHEET.*

LICENSED LANDSCAPE ARCHITECT
SALLY BANG No.5068
Signature
11-30-15
Renewal Date
3-17-14
Date
STATE OF CALIFORNIA

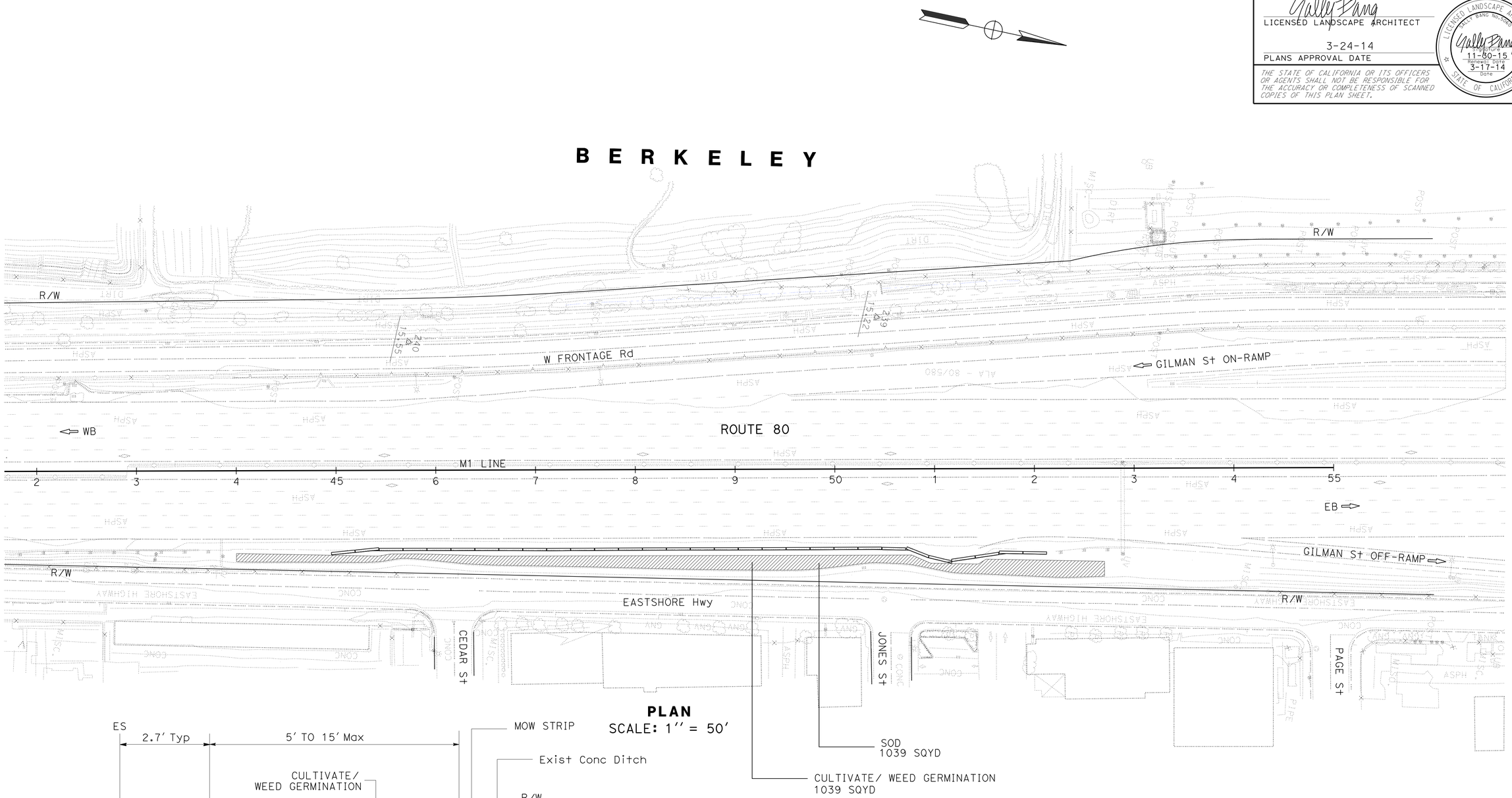


**PLAN**
SCALE: 1'' = 50'

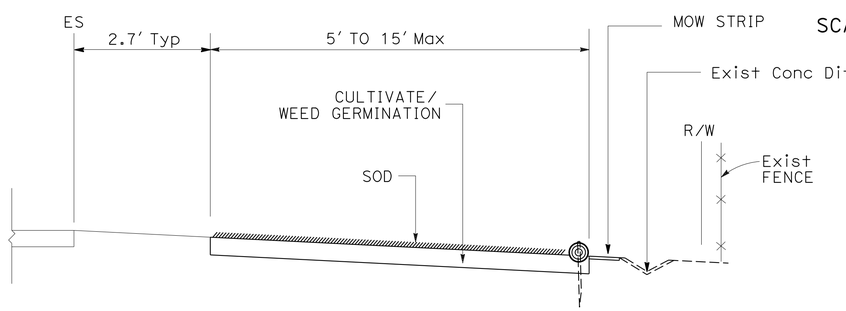


M1 44+00 TO M1 52+70
NO SCALE

# PLANTING PLAN

SCALE: AS SHOWN

*APPROVED FOR PLANTING WORK ONLY*

**PP- 1**

STATE OF CALIFORNIA - DEPARTMENT OF TRANSPORTATION
Caltrans
WATER QUALITY

SENIOR LANDSCAPE ARCHITECT: DAVID YAM
CALCULATED-DESIGNED BY: ANGELA KWAN
CHECKED BY: SALLY BANG
REVISED BY: SB
DATE REVISED: 3/17/14

LAST REVISION 03-17-14
DATE PLOTTED => 01-APR-2014
TIME PLOTTED => 13:15

| Dist | COUNTY | ROUTE | POST MILES TOTAL PROJECT | SHEET No. | TOTAL SHEETS |
|---|---|---|---|---|---|
| 04 | Ala | 80 | 6.2/6.4 | 9 | 13 |

Sally Bang
LICENSED LANDSCAPE ARCHITECT

3-24-14
PLANS APPROVAL DATE

THE STATE OF CALIFORNIA OR ITS OFFICERS OR AGENTS SHALL NOT BE RESPONSIBLE FOR THE ACCURACY OR COMPLETENESS OF SCANNED COPIES OF THIS PLAN SHEET.

## FIBER ROLLS

| SEQUENCE | ITEM | TYPE | REMARKS |
|---|---|---|---|
| INSTALL FIBER ROLLS BEFORE PLACING SOD. | FIBER ROLLS | TYPE B 8" TO 10" DIA | TYPE 1 FIBER ROLL INSTALLATION |

## EROSION CONTROL TYPE 1

| SEQUENCE | ITEM | MATERIAL | | APPLICATION RATE | DEPTH |
|---|---|---|---|---|---|
| | | DESCRIPTION | TYPE | | |
| 1 | IMPORTED TOPSOIL | - | - | 1040 CY/ACRE | |
| 2 | COMPOST | COMPOST | MEDIUM | 260 CY/ACRE | |
| 3 | INCORPORATE MATERIALS | COMPOST/ IMPORTED TOPSOIL | - | - | 8" |

## EROSION CONTROL QUANTITIES

| SHEET | IMPORTED TOPSOIL CY | COMPOST SQFT | INCORPORATE MATERIALS SQFT | FIBER ROLLS LF |
|---|---|---|---|---|
| EC-1 | 215 | 9353 | 9353 | 879 |
| | | | | |
| TOTAL | 215 | 9353 | 9353 | 879 |

# EROSION CONTROL LEGEND AND QUANTITIES

NO SCALE

**ECL-1**

LAST REVISION
DATE PLOTTED => 01-APR-2014
TIME PLOTTED => 13:15
03-17-14

| REVISED BY | DATE REVISED |
|---|---|
| SB | 3/17/14 |

CALCULATED-DESIGNED BY: SALLY BANG
CHECKED BY: ANGELA KWAN

SENIOR LANDSCAPE ARCHITECT: DAVID YAM

STATE OF CALIFORNIA - DEPARTMENT OF TRANSPORTATION
Caltrans®
WATER QUALITY

| Dist | COUNTY | ROUTE | POST MILES TOTAL PROJECT | SHEET No. | TOTAL SHEETS |
|---|---|---|---|---|---|
| 04 | Ala | 80 | 6.2/6.4 | 10 | 13 |

LICENSED LANDSCAPE ARCHITECT

3-24-14

PLANS APPROVAL DATE

*THE STATE OF CALIFORNIA OR ITS OFFICERS OR AGENTS SHALL NOT BE RESPONSIBLE FOR THE ACCURACY OR COMPLETENESS OF SCANNED COPIES OF THIS PLAN SHEET.*

LICENSED LANDSCAPE ARCHITECT — SALLY BANG No. 5066 — Signature — 11-30-15 Renewal Date — 3-17-14 Date — STATE OF CALIFORNIA

**LEGEND:**

EROSION CONTROL (TYPE 1)

FIBER ROLLS — FR — FR

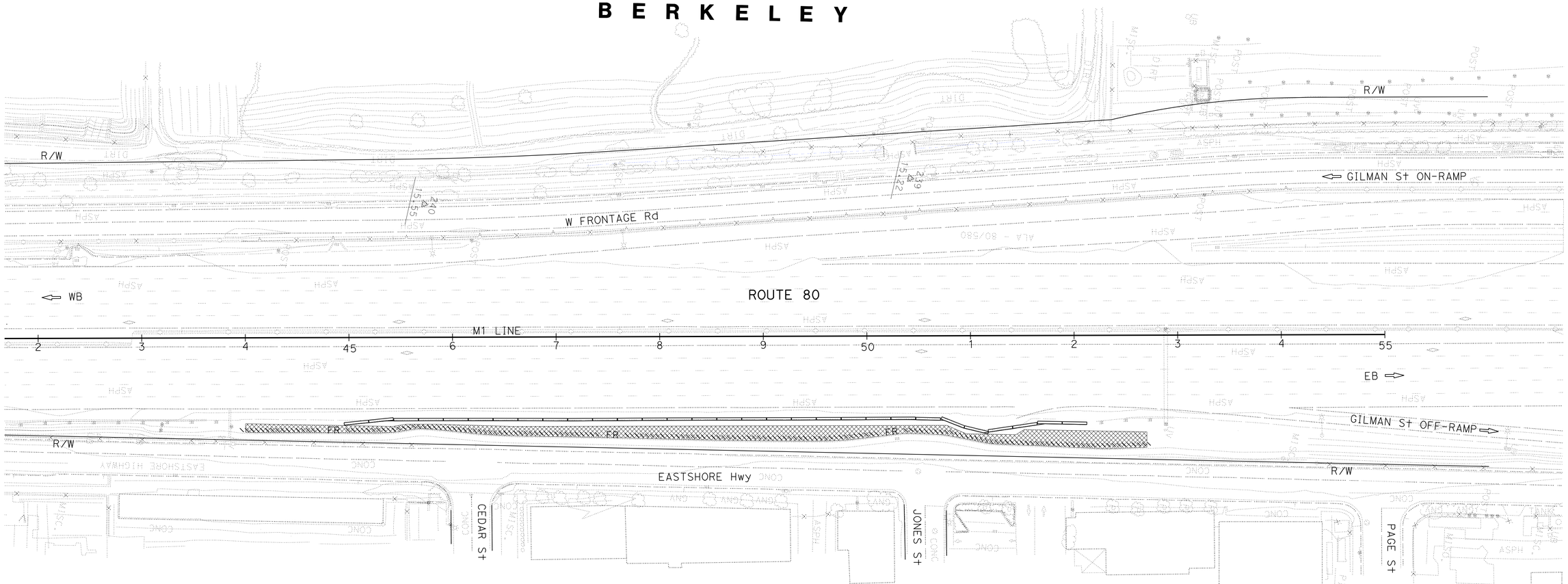


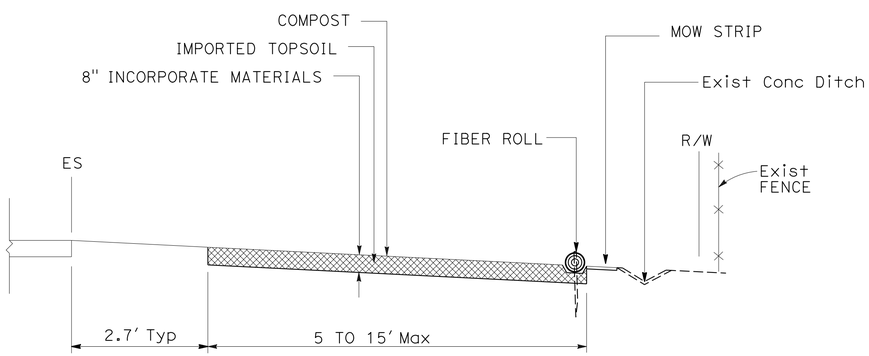


M1 44+00 TO 52+70
NO SCALE

*APPROVED FOR EROSION CONTROL WORK ONLY*

# EROSION CONTROL PLAN

SCALE: 1'' = 50'

**EC- 1**

STATE OF CALIFORNIA - DEPARTMENT OF TRANSPORTATION

Caltrans® WATER QUALITY

SENIOR LANDSCAPE ARCHITECT: DAVID YAM

CALCULATED-DESIGNED BY: SALLY BANG

CHECKED BY: ANGELA KWAN

REVISED BY: SB

DATE REVISED: 3/17/14

LAST REVISION 03-17-14

DATE PLOTTED => 01-APR-2014

TIME PLOTTED => 13:15

## M

| | |
|---|---|
| Maint | MAINTENANCE |
| Max | MAXIMUM |
| MB | METAL BEAM |
| MBB | METAL BEAM BARRIER |
| MBGR | METAL BEAM GUARD RAILING |
| Med | MEDIAN |
| MGS | MIDWEST GUARDRAIL SYSTEM |
| MH | MANHOLE |
| Min | MINIMUM |
| Misc | MISCELLANEOUS |
| Misc I & S | MISCELLANEOUS IRON AND STEEL |
| Mkr | MARKER |
| Mod | MODIFIED,<br>MODIFY |
| Mon | MONUMENT |
| MP | METAL PLATE |
| MPGR | METAL PLATE GUARD RAILING |
| MR | MOVEMENT RATING |
| MSE | MECHANICALLY STABILIZED EMBANKMENT |
| Mt | MOUNTAIN, MOUNT |
| Mtl | MATERIAL |
| MVP | MAINTENANCE VEHICLE PULLOUT |

## N

| | |
|---|---|
| N | NORTH |
| NB | NORTHBOUND |
| No. | NUMBER (MUST HAVE PERIOD) |
| Nos. | NUMBERS (MUST HAVE PERIOD) |
| NPS | NOMINAL PIPE SIZE |
| NS | NEAR SIDE |
| NSP | NEW STANDARD PLAN |
| NTS | NOT TO SCALE |

## O

| | |
|---|---|
| Oblr | OBLITERATE |
| OC | OVERCROSSING |
| OD | OUTSIDE DIAMETER |
| OF | OUTSIDE FACE |
| OG | ORIGINAL GROUND |
| OGAC | OPEN GRADED ASPHALT CONCRETE |
| OGFC | OPEN GRADED FRICTION COURSE |
| OH | OVERHEAD |
| OHWM | ORDINARY HIGH WATER MARK |
| O-O | OUT TO OUT |
| Opp | OPPOSITE |
| OSD | OVERSIDE DRAIN |

## P

| | |
|---|---|
| P | PAGE |
| PAP | PERFORATED ALUMINUM PIPE |
| PB | PULL BOX |
| PC | POINT OF CURVATURE,<br>PRECAST |
| PCC | POINT OF COMPOUND CURVE,<br>PORTLAND CEMENT CONCRETE |
| PCMS | PORTABLE CHANGEABLE MESSAGE SIGN |
| PCP | PERFORATED CONCRETE PIPE,<br>PRESTRESSED CONCRETE PIPE |
| PCVC | POINT OF COMPOUND VERTICAL CURVE |
| PEC | PERMIT TO ENTER AND CONSTRUCT |
| Ped | PEDESTRIAN |
| Ped OC | PEDESTRIAN OVERCROSSING |
| Ped UC | PEDESTRIAN UNDERCROSSING |
| Perm Mtl | PERMEABLE MATERIAL |

## P continued

| | |
|---|---|
| PG | PROFILE GRADE |
| PI | POINT OF INTERSECTION |
| PJP | PARTIAL JOINT PENETRATION |
| Pkwy | PARKWAY |
| ℄,PL | PLATE |
| P/L | PROPERTY LINE |
| PM | POST MILE,<br>TIME FROM NOON TO MIDNIGHT |
| PN | PAVING NOTCH |
| POC | POINT OF HORIZONTAL CURVE |
| POT | POINT OF TANGENT |
| POVC | POINT OF VERTICAL CURVE |
| PP | PIPE PILE,<br>PLASTIC PIPE,<br>POWER POLE |
| PPL | PREFORMED PERMEABLE LINER |
| PPP | PERFORATED PLASTIC PIPE |
| PRC | POINT OF REVERSE CURVE |
| PRF | PAVEMENT REINFORCING FABRIC |
| PRVC | POINT OF REVERSE VERTICAL CURVE |
| PS&E | PLANS, SPECIFICATIONS AND ESTIMATES |
| PS, P/S | PRESTRESSED |
| PSP | PERFORATED STEEL PIPE |
| PT | POINT OF TANGENCY |
| PVC | POLYVINYL CHLORIDE |
| Pvmt | PAVEMENT |

## Q

| | |
|---|---|
| Qty | QUANTITY |

## R

| | |
|---|---|
| R | RADIUS |
| R & D | REMOVE AND DISPOSE |
| R & S | REMOVE AND SALVAGE |
| R/C | RATE OF CHANGE |
| RCA | REINFORCED CONCRETE ARCH |
| RCB | REINFORCED CONCRETE BOX |
| RCP | REINFORCED CONCRETE PIPE |
| RCPA | REINFORCED CONCRETE PIPE ARCH |
| Rd | ROAD |
| Reinf | REINFORCED,<br>REINFORCEMENT,<br>REINFORCING |
| Rel | RELOCATE |
| Repl | REPLACEMENT |
| Ret | RETAINING |
| Rev | REVISED, REVISION |
| Rdwy | ROADWAY |
| RHMA | RUBBERIZED HOT MIX ASPHALT |
| Riv | RIVER |
| RM | ROAD-MIXED |
| RP | RADIUS POINT,<br>REFERENCE POINT |
| RR | RAILROAD |
| RSP | ROCK SLOPE PROTECTION,<br>REVISED STANDARD PLAN |
| Rt | RIGHT |
| Rte | ROUTE |
| RW | REDWOOD,<br>RETAINING WALL |
| R/W | RIGHT OF WAY |
| Rwy | RAILWAY |

## S

| | |
|---|---|
| S | SOUTH,<br>SUPPLEMENT |
| SAE | STRUCTURE APPROACH EMBANKMENT |
| Salv | SALVAGE |
| SAPP | STRUCTURAL ALUMINUM PLATE PIPE |
| SB | SOUTHBOUND |
| SC | SAND CUSHION |
| SCSP | SLOTTED CORRUGATED STEEL PIPE |
| SD | STORM DRAIN |
| Sec | SECOND,<br>SECTION |
| Sep | SEPARATION |
| SG | SUBGRADE |
| Shld | SHOULDER |
| Sht | SHEET |
| Sim | SIMILAR |
| ℄ | STATION LINE |
| SM | SELECTED MATERIAL |
| Spec | SPECIAL,<br>SPECIFICATIONS |
| SPP | SLOTTED PLASTIC PIPE |
| SS | SLOPE STAKE |
| SSBM | STRAP AND SADDLE BRACKET METHOD |
| SSD | STRUCTURAL SECTION DRAIN |
| SSPA | STRUCTURAL STEEL PLATE ARCH |
| SSPP | STRUCTURAL STEEL PLATE PIPE |
| SSPPA | STRUCTURAL STEEL PLATE PIPE ARCH |
| SSRP | STEEL SPIRAL RIB PIPE |
| St | STREET |
| Sta | STATION |
| STBB | SINGLE THRIE BEAM BARRIER |
| Std | STANDARD |
| Str | STRUCTURE |
| Surf | SURFACING |
| SW | SIDEWALK,<br>SOUND WALL |
| Swr | SEWER |
| Sym | SYMMETRICAL |
| S4S | SURFACE 4 SIDES |

## T

| | |
|---|---|
| T | SEMI-TANGENT |
| Tan | TANGENT |
| TBB | THRIE BEAM BARRIER |
| Tbr | TIMBER |
| TC | TOP OF CURB |
| TCB | TRAFFIC CONTROL BOX |
| TCE | TEMPORARY CONSTRUCTION EASEMENT |
| Tel | TELEPHONE |
| Temp | TEMPORARY |
| TG | TOP OF GRADE |
| Tot | TOTAL |
| TP | TELEPHONE POLE |
| TPB | TREATED PERMEABLE BASE |
| TPM | TREATED PERMEABLE MATERIAL |
| Trans | TRANSITION |

## T continued

| | |
|---|---|
| TS | TRANSVERSE,<br>TRAFFIC SIGNAL,<br>TUBULAR STEEL |
| Typ | TYPICAL |

## U

| | |
|---|---|
| UC | UNDERCROSSING |
| UD | UNDERDRAIN |
| UG | UNDERGROUND |
| UON | UNLESS OTHERWISE NOTED |
| UP | UNDERPASS |

## V

| | |
|---|---|
| V | VALVE,<br>DESIGN SPEED |
| Var | VARIABLE,<br>VARIES |
| VC | VERTICAL CURVE |
| VCP | VITRIFIED CLAY PIPE |
| Vert | VERTICAL |
| Via | VIADUCT |
| Vol | VOLUME |

## W

| | |
|---|---|
| W | WEST,<br>WIDTH |
| WB | WESTBOUND |
| WH | WEEP HOLE |
| WM | WIRE MESH |
| WS | WATER SURFACE |
| WSP | WELDED STEEL PIPE |
| Wt | WEIGHT |
| WV | WATER VALVE |
| WW | WINGWALL |
| WWLOL | WINGWALL LAYOUT LINE |

## X

| | |
|---|---|
| X Sec | CROSS SECTION |
| Xing | CROSSING |

## Y

| | |
|---|---|
| Yr | YEAR |
| Yrs | YEARS |

| Dist | COUNTY | ROUTE | POST MILES TOTAL PROJECT | SHEET No. | TOTAL SHEETS |
|---|---|---|---|---|---|
| 04 | Ala | 80 | 6.2/6.4 | 11 | 13 |

Grace M. Tsushima
REGISTERED CIVIL ENGINEER

July 19, 2013
PLANS APPROVAL DATE

REGISTERED PROFESSIONAL ENGINEER — Grace M. Tsushima — No. C49814 — Exp. 9-30-14 — CIVIL — STATE OF CALIFORNIA

THE STATE OF CALIFORNIA OR ITS OFFICERS OR AGENTS SHALL NOT BE RESPONSIBLE FOR THE ACCURACY OR COMPLETENESS OF SCANNED COPIES OF THIS PLAN SHEET.

TO ACCOMPANY PLANS DATED 3-24-14

### UNIT OF MEASUREMENT SYMBOLS:

Some of the symbols used in the project plan quantity tables and in the Bid Item List are:

TABLE A

| SYMBOL USED | DEFINITIONS |
|---|---|
| ACRE | ACRE |
| CF | CUBIC FOOT |
| CY | CUBIC YARD |
| EA | EACH |
| GAL | GALLON |
| LB | POUND |
| LF | LINEAR FOOT |
| SQFT | SQUARE FOOT |
| SQYD | SQUARE YARD |
| STA | 100 FEET |
| TAB | TABLET |
| TON | 2,000 POUNDS |

Some of the symbols used in the plans other than in the project plan quantity tables are:

TABLE B

| SYMBOL USED | DEFINITIONS |
|---|---|
| ksi | KIPS PER SQUARE INCH |
| ksf | KIPS PER SQUARE FOOT |
| psi | POUNDS PER SQUARE INCH |
| psf | POUNDS PER SQUARE FOOT |
| $lb/ft^3$, pcf | POUNDS PER CUBIC FOOT |
| tsf | TONS PER SQUARE FOOT |
| mph, MPH * | MILES PER HOUR |
| ø | NOMINAL DIAMETER |
| oz | OUNCE |
| lb | POUND |
| kip | 1,000 POUNDS |
| cal | CALORIE |
| ft | FOOT OR FEET |
| gal | GALLON |

* For use on a sign panel only

STATE OF CALIFORNIA
DEPARTMENT OF TRANSPORTATION

# ABBREVIATIONS (SHEET 2 OF 2)

NO SCALE

RSP A10B DATED JULY 19, 2013 SUPERSEDES STANDARD PLAN A10B DATED MAY 20, 2011 - PAGE 2 OF THE STANDARD PLANS BOOK DATED 2010.

**REVISED STANDARD PLAN RSP A10B**

2010 REVISED STANDARD PLAN RSP A10B

6-7-13

| Dist | COUNTY | ROUTE | POST MILES TOTAL PROJECT | SHEET No. | TOTAL SHEETS |
|---|---|---|---|---|---|
| 04 | Ala | 80 | 6.2/6.4 | 12 | 13 |

LICENSED LANDSCAPE ARCHITECT

July 19, 2013
PLANS APPROVAL DATE

Gregory A. Balzer 2015
10-31-15
2-28-15
Renewal Date
7-19-13
Date
LICENSED LANDSCAPE ARCHITECT
STATE OF CALIFORNIA

THE STATE OF CALIFORNIA OR ITS OFFICERS OR AGENTS SHALL NOT BE RESPONSIBLE FOR THE ACCURACY OR COMPLETENESS OF SCANNED COPIES OF THIS PLAN SHEET.

TO ACCOMPANY PLANS DATED 3-24-14

## A

| | |
|---|---|
| AB | AGGREGATE BASE |
| ABS | ACRYLONITRILE-BUTADIENE-STYRENE |
| AC | ASPHALT CONCRETE |
| ACC | ARMOR-CLAD CONDUCTORS |
| Adj | ADJACENT/ADJUSTABLE |
| AIC | AUXILIARY IRRIGATION CONTROLLER |
| Alt | ALTERNATIVE |
| AMEND | AMENDMENT |
| ARV | AIR RELEASE VALVE |
| AUTO | AUTOMATIC |
| AUX | AUXILIARY |
| AVB | ATMOSPHERIC VACUUM BREAKER |

## B

| | |
|---|---|
| B&B | BALLED AND BURLAPPED |
| B/B | BRASS/BRONZE |
| B/B/PL | BRASS/BRONZE/PLASTIC |
| B/PL | BRASS/PLASTIC |
| BFM | BONDED FIBER MATRIX |
| Bit Ctd | BITUMINOUS COATED |
| BP | BOOSTER PUMP |
| BPA | BACKFLOW PREVENTER ASSEMBLY |
| BPE | BACKFLOW PREVENTER ENCLOSURE |
| BV | BALL VALVE |

## C

| | |
|---|---|
| C | CONDUIT |
| CAP | CORRUGATED ALUMINUM PIPE |
| CARV | COMBINATION AIR RELEASE VALVE |
| CB | COUPLING BAND |
| CCA | CAM COUPLER ASSEMBLY |
| CEC | CONTROLLER ENCLOSURE CABINET |
| CHDPE | CORRUGATED HIGH DENSITY POLYETHYLENE |
| CL | CHAIN LINK |
| CNC | CONTROL AND NEUTRAL CONDUCTORS |
| Conc | CONCRETE |
| CP | COPPER PIPE |
| CS | COMPOST SOCK |
| CSP | CORRUGATED STEEL PIPE |
| CST | CENTER STRIP |
| CV | CHECK VALVE |

## D

| | |
|---|---|
| Dia | DIAMETER |
| DIP | DUCTILE IRON PIPE |
| DIT | DRIP IRRIGATION TUBING |
| DG | DECOMPOSED GRANITE |
| DN | DIAMETER NOMINAL |
| DVA | DRIP VALVE ASSEMBLY |

## E

| | |
|---|---|
| EC | EROSION CONTROL |
| ECTC | EROSION CONTROL TECHNOLOGY COUNCIL |
| Elect | ELECTRIC/ELECTRICAL |
| Elev | ELEVATION |
| ELL | ELBOW |
| ENCL | ENCLOSURE |
| EP | EDGE OF PAVEMENT |
| ES | EDGE OF SHOULDER |
| EST | END STRIP |
| ESTB | ESTABLISHMENT |
| ETW | EDGE OF TRAVELED WAY |

## F

| | |
|---|---|
| F | FULL CIRCLE |
| F/P | FULL/PART CIRCLE |
| FCV | FLOW CONTROL VALVE |
| FERT | FERTILIZER |
| FG | FINISHED GRADE |
| FH | FLEXIBLE HOSE |
| FIPT | FEMALE IRON PIPE THREAD |
| FIS | FERTILIZER INJECTOR SYSTEM |
| FL | FLOW LINE |
| FR | FIBER ROLL |
| FS | FLOW SENSOR |
| FSC | FLOW SENSOR CABLE |
| FV | FLUSH VALVE |

## G

| | |
|---|---|
| Galv | GALVANIZED |
| GARV | GARDEN VALVE |
| GARVA | GARDEN VALVE ASSEMBLY |
| GM | GRAVEL MULCH |
| GPH | GALLONS PER HOUR |
| GPM | GALLONS PER MINUTE |
| GSP | GALVANIZED STEEL PIPE |
| GV | GATE VALVE |

## H

| | |
|---|---|
| H | HALF CIRCLE |
| HDPE | HIGH DENSITY POLYETHYLENE |
| HP | HORSEPOWER/HINGE POINT |
| HPL | HIGH PRESSURE LINE |
| Hwy | HIGHWAY |

## I

| | |
|---|---|
| IC | IRRIGATION CONTROLLER |
| ICC | IRRIGATION CONTROLLER(S) IN CONTROLLER ENCLOSURE CABINET |
| ID | INSIDE DIAMETER |
| IFS | IRRIGATION FILTRATION SYSTEM |
| IPS | IRON PIPE SIZE |
| IPT | IRON PIPE THREAD |
| Irr | IRRIGATION |

## L

| | |
|---|---|
| L | LENGTH |

## M

| | |
|---|---|
| Max | MAXIMUM |
| MBGR | METAL BEAM GUARD RAILING |
| MCV | MANUAL CONTROL VALVE |
| MIC | MASTER IRRIGATION CONTROLLER |
| Min | MINIMUM |
| MIPT | MALE IRON PIPE THREAD |
| Misc | MISCELLANEOUS |
| Mtl | MATERIAL |
| MVP | MAINTENANCE VEHICLE PULLOUT |

## N

| | |
|---|---|
| NCN | NO COMMON NAME |
| NL | NOZZLE LINE |
| No. | NUMBER |
| NPT | NATIONAL PIPE THREAD |

## O

| | |
|---|---|
| O/C | ON CENTER |
| OD | OUTSIDE DIAMETER |
| OL | OVERLAP |

## P

| | |
|---|---|
| P | PART CIRCLE |
| PB | PULL BOX |
| PCC | PORTLAND CEMENT CONCRETE |
| PE | POLYETHYLENE |
| Pkt | PACKET |
| PL | PLASTIC |
| PLS | PURE LIVE SEED |
| PLT | PLANT/PLANTING |
| PLT ESTB | PLANT ESTABLISHMENT |
| PM | POST MILE |
| PR | PRESSURE RATED |
| PRLV | PRESSURE RELIEF VALVE |
| PRV | PRESSURE REGULATING VALVE |
| PVC | POLYVINYL CHLORIDE |
| Pvmt | PAVEMENT |

## Q

| | |
|---|---|
| Q | QUARTER CIRCLE |
| QCV | QUICK COUPLING VALVE |

NOTE:
For additional abbreviations, see Standard Plans A10A and A10B.

## R

| | |
|---|---|
| R | RADIUS |
| RCP | REINFORCED CONCRETE PIPE |
| RCV | REMOTE CONTROL VALVE |
| RCVM | REMOTE CONTROL VALVE (MASTER) |
| RCVMF | REMOTE CONTROL VALVE (MASTER) W/FLOW SENSOR |
| RCVP | REMOTE CONTROL VALVE W/PRESSURE REGULATOR |
| RCW | RECYCLED WATER |
| RECP | ROLLED EROSION CONTROL PRODUCT |
| REQ | REQUIRED |
| RICS | REMOTE IRRIGATION CONTROL SYSTEM |
| R/W | RIGHT OF WAY |

## S

| | |
|---|---|
| S | SLIP |
| SCH | SCHEDULE |
| SF | STATE-FURNISHED |
| Shld | SHOULDER |
| Sq | SQUARE |
| SST | SIDE STRIP |
| Sta | STATION |
| Std | STANDARD |
| SW | SIDEWALK/SOUND WALL |

## T

| | |
|---|---|
| T | THIRD CIRCLE/THREAD |
| TLS | TRUCK LOADING STANDPIPE |
| TQ | THREE QUARTER CIRCLE |
| TRM | TURF REINFORCEMENT MAT |
| TT | TWO-THIRDS CIRCLE |
| TWSA | TREE WELL SPRINKLER ASSEMBLY |
| Typ | TYPICAL |

## U

| | |
|---|---|
| UG | UNDERGROUND |

## W

| | |
|---|---|
| W | WIDTH |
| W/ | WITH |
| WM | WATER METER |
| WS | WYE STRAINER |
| WSA | WYE STRAINER ASSEMBLY |
| WSP | WELDED STEEL PIPE |
| WWM | WELDED WIRE MESH |

STATE OF CALIFORNIA
DEPARTMENT OF TRANSPORTATION

# LANDSCAPE AND EROSION CONTROL ABBREVIATIONS

NO SCALE

RSP H1 DATED JULY 19, 2013 SUPERSEDES STANDARD PLAN H1
DATED MAY 20, 2011 - PAGE 218 OF THE STANDARD PLANS BOOK DATED 2010.

**REVISED STANDARD PLAN RSP H1**

2010 REVISED STANDARD PLAN RSP H1

6-28-13

| Dist | COUNTY | ROUTE | POST MILES TOTAL PROJECT | SHEET No. | TOTAL SHEETS |
|---|---|---|---|---|---|
| 04 | Ala | 80 | 6.2/6.4 | 13 | 13 |

REGISTERED CIVIL ENGINEER

April 19, 2013
PLANS APPROVAL DATE

REGISTERED PROFESSIONAL ENGINEER — Gurinderpal Bhullar — No. C48815 — Exp. 9-30-14 CIVIL — STATE OF CALIFORNIA

THE STATE OF CALIFORNIA OR ITS OFFICERS OR AGENTS SHALL NOT BE RESPONSIBLE FOR THE ACCURACY OR COMPLETENESS OF SCANNED COPIES OF THIS PLAN SHEET.

TO ACCOMPANY PLANS DATED 3-24-14

## NOTES:

See Revised Standard Plan RSP T9 for tables.

Use cone spacing X for taper segment, Y for tangent segment or Z for conflict situations, as approriate, per Table 1, unless X, Y, or Z cone spacing is shown on this sheet.

Unless otherwise specified in the special provisions, all temporary warning signs shall have black legend on fluorescent orange background.

California codes are designated by (CA). Otherwise, Federal (MUTCD) codes are shown.

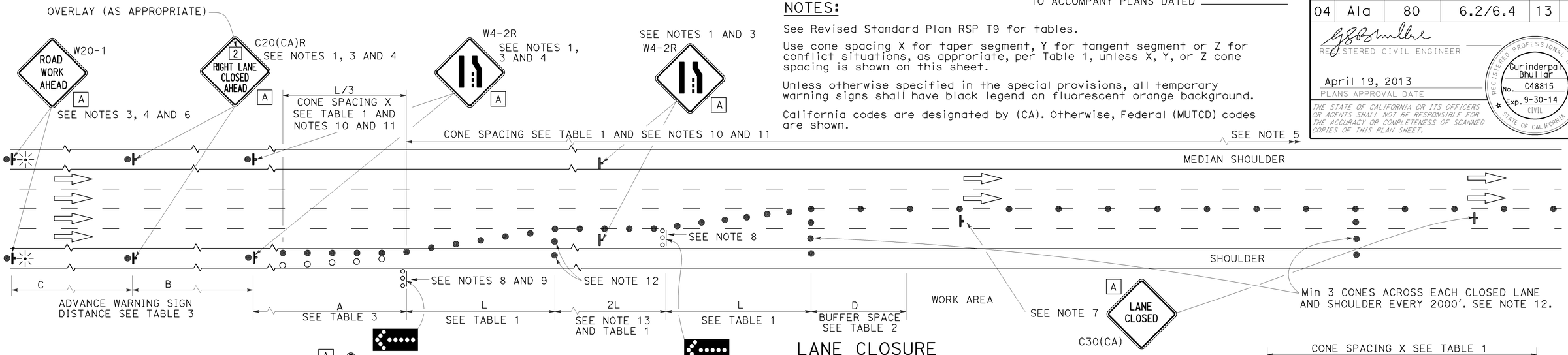


## LANE CLOSURE

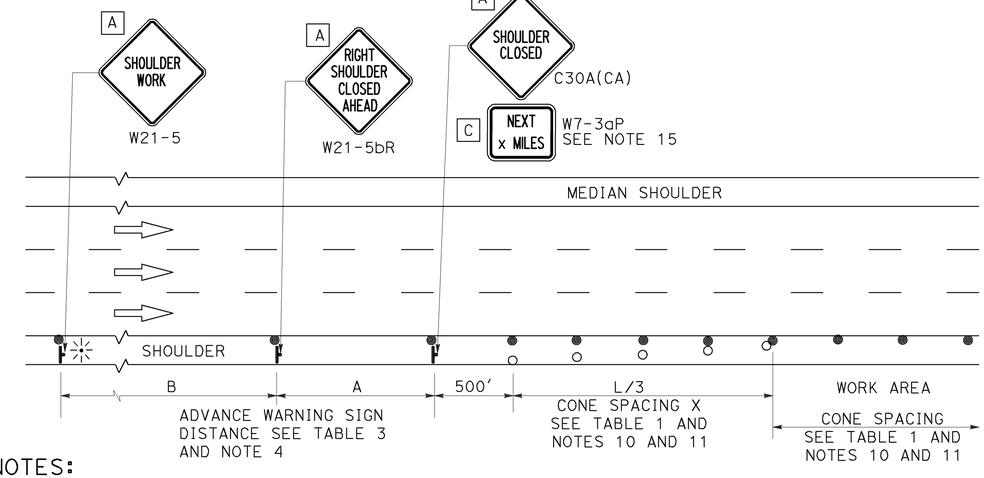


## SHOULDER CLOSURE

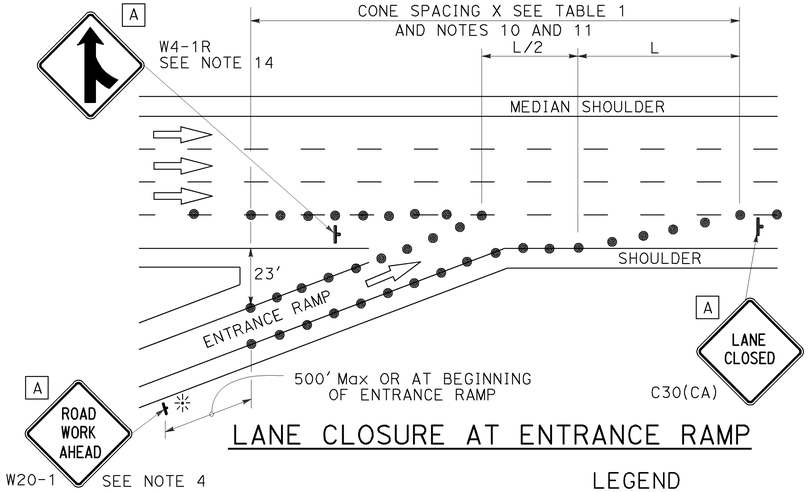


## LANE CLOSURE AT ENTRANCE RAMP

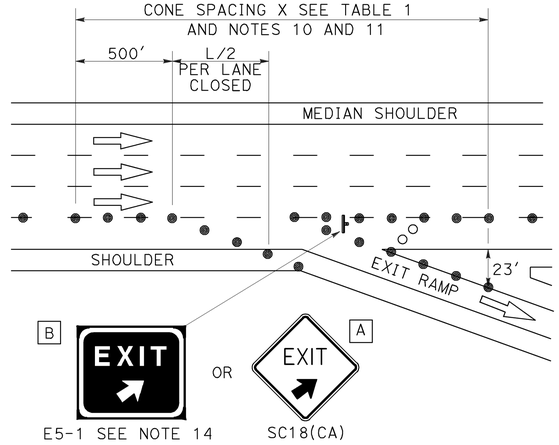


## LANE CLOSURE AT EXIT RAMP

## NOTES:

1. Median lane closures shall conform to the details as shown except that C20(CA)L and W4-2L signs shall be used.
2. At least one person shall be assigned to provide full time maintenance of traffic control devices for lane closures.
3. Duplicate sign installations are not required:
   a) On opposite shoulder if at least one-half of the available lanes remain open to traffic.
   b) In the median if the width of the median shoulder is less than 8' and the outside lanes are to be closed.
4. Each advance warning sign on each side of the roadway shall be equipped with at least two flags for daytime closure. Each flag shall be at least 16" x 16" in size and shall be orange or fluorescent red-orange in color. Flashing beacons shall be placed at the locations indicated for lane closure during hours of darkness.
5. A G20-2 "END ROAD WORK" sign, with minimum size of 48" x 24" as appropriate, shall be placed at the end of the lane closure unless the end of work area is obvious or ends within a larger project's limits.
6. If the W20-1 sign would follow within 2000' of a stationary W20-1 or G20-1 "ROAD WORK NEXT _____ MILES", use a C20(CA) sign for the first advance warning sign.
7. Place a C30(CA) sign every 2000' throughout length of lane closure.
8. One flashing arrow sign for each lane closed. The flashing arrow signs shall be Type I.
9. A minimum 1500' of sight distance shall be provided where possible for vehicles approaching the first flashing arrow sign. Lane closures shall not begin at top of crest vertical curve or on a horizontal curve.
10. All cones used for lane closures during the hours of darkness shall be fitted with retroreflective bands (or sleeves) as specified in the specifications.
11. Portable delineators, placed at one-half the spacing indicated for traffic cones may be used instead of cones for daytime closures only.
12. Unless otherwise specified in the special provisions, a minimum of 3 cones shall be placed transversely across each closed lane and shoulder at each location where a taper across a traffic lane ends and every 2000' as shown on the "Lane Closure" detail. Two Type II barricades may be used instead of the 3 cones. The transverse alignment of the cones or barricades on the closed shoulder may be shifted from the transverse alignment to provide access to the work.
13. Unless otherwise specified in the special provisions, the 2L tangent shown along lane lines shall be used between the L tapers required for each closed traffic lane.
14. Unless otherwise specified in the special provisions, the E5-1 or SC18(CA) and W4-1 signs shall be used as shown.
15. A W7-3aP "NEXT___MILES" plaque must be used if theshoulder closure extends beyond the distance that can be perceived by road users.

## LEGEND

- TRAFFIC CONE
- TRAFFIC CONE (OPTIONAL TAPER)
- TEMPORARY TRAFFIC CONTROL SIGN
- FLASHING ARROW SIGN (FAS)
- FAS SUPPORT OR TRAILER
- PORTABLE FLASHING BEACON

## SIGN PANEL SIZE (Min)

| | |
|---|---|
| A | 48" x 48" |
| B | 72" x 60" |
| C | 36" x 30" |

STATE OF CALIFORNIA
DEPARTMENT OF TRANSPORTATION

# TRAFFIC CONTROL SYSTEM FOR LANE CLOSURE ON FREEWAYS AND EXPRESSWAYS

NO SCALE

RSP T10 DATED APRIL 19, 2013 SUPERSEDES STANDARD PLAN T10 DATED MAY 20, 2011 - PAGE 237 OF THE STANDARD PLANS BOOK DATED 2010.

# REVISED STANDARD PLAN RSP T10

2010 REVISED STANDARD PLAN RSP T10

12-18-13