Dist	COUNTY	ROUTE	POST MILES TOTAL PROJECT	SHEET No.	TOTAL SHEETS
04	Ala	260	R0.8/R2.0	153	165

REGISTERED CIVIL ENGINEER — DATE 05-12-15

6-1-15
PLANS APPROVAL DATE

REGISTERED PROFESSIONAL ENGINEER — Edgardo A. Isidro — No. C 58507 — Exp. 12-31-16 — CIVIL — STATE OF CALIFORNIA

The State of California or its officers or agents shall not be responsible for the accuracy or completeness of scanned copies of this plan sheet.

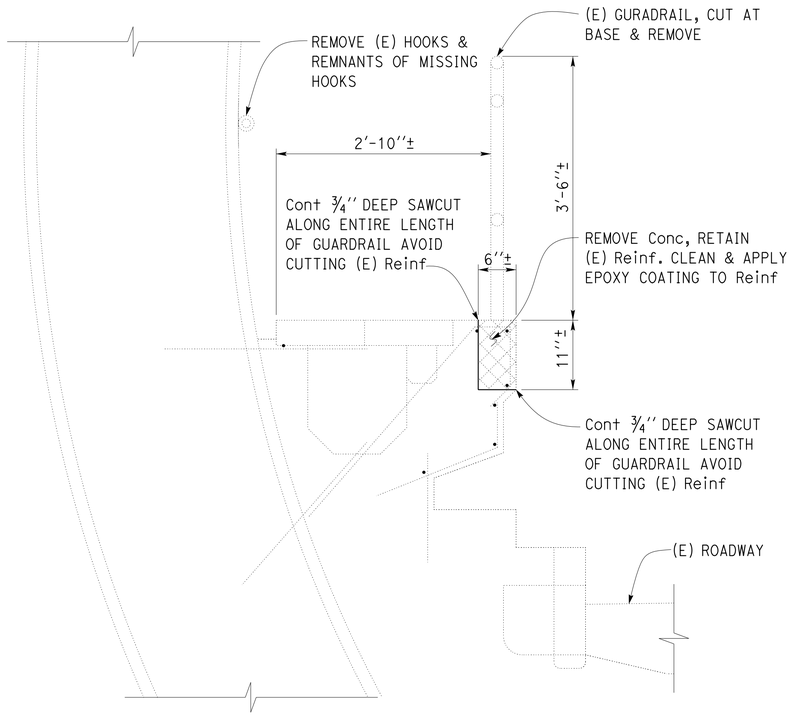

1 (E) GUARDRAIL REMOVAL AT PEDESTRIAN/BICYCLE WALKWAY IN TUBE

1'' = 1' - 0''

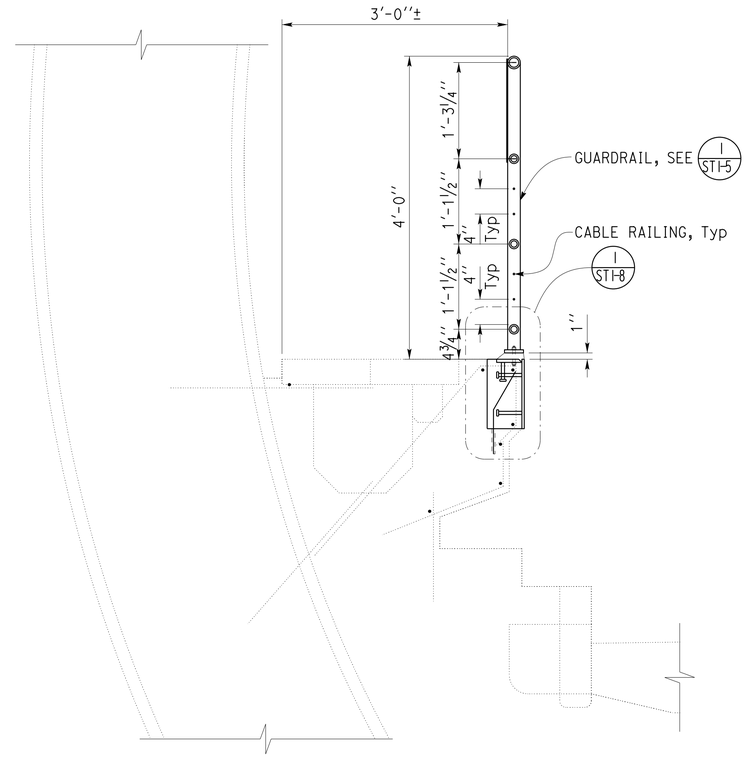

2 GUARDRAIL AT PEDESTRIAN/BICYCLE WALKWAY IN TUBE

1'' = 1' - 0''

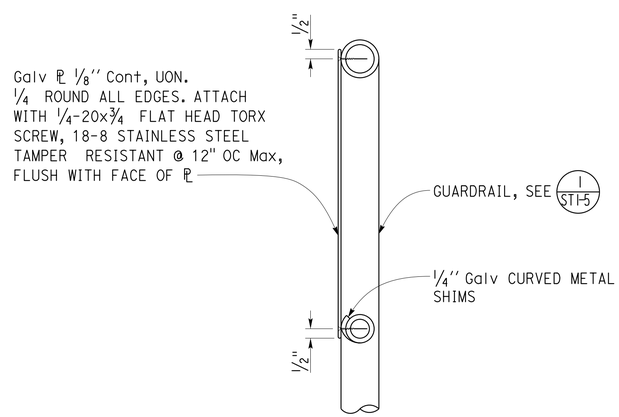

3 PLATE AT GUARDRAIL

3'' = 1' - 0''

2 REPLACED PER ADDENDUM No. 2 DATED JULY 20, 2015

DESIGN	BY Edgardo Isidro	CHECKED Bill Rocha	
DETAILS	BY Daniel Harakh	CHECKED Edgardo Isidro	
QUANTITIES	BY	CHECKED	

STATE OF CALIFORNIA — DEPARTMENT OF TRANSPORTATION

DIVISION OF ENGINEERING SERVICES — ARCHITECTURAL AND STRUCTURAL DESIGN

BRIDGE No. 33-106R — POST MILE R0.8/R2.0

POSEY TUBE BRIDGE REHABILITATION

POSEY TUBE GUARDRAIL — GUARDRAIL SECTION

SHEET ST1-2

UNIT: 3581 CONTRACT No.: 4A4800
PROJECT NUMBER & PHASE: 04000011371

DISREGARD PRINTS BEARING EARLIER REVISION DATES → REVISION DATES (PRELIMINARY STAGE ONLY) 07-31-13 09-05-13 09-24-13 10-04-13 10-08-13 10-14-13 11-21-13 02-18-14 05-11-15

SHEET OF

TAEMWW Imperial - CCSC Rev. 02/13

ORIGINAL SCALE IN INCHES FOR REDUCED PLANS 0 1 2 3

20-JUL-2015 11:02

P:\dist_04\0400001137_posey_webster_tube\expedite\Addenda\Addendum No. 2\st01_02.dgn

Dist	COUNTY	ROUTE	POST MILES TOTAL PROJECT	SHEET No.	TOTAL SHEETS
04	Ala	260	R0.8/R2.0	155	165

REGISTERED CIVIL ENGINEER — DATE 05-12-15

PLANS APPROVAL DATE 6-1-15

The State of California or its officers or agents shall not be responsible for the accuracy or completeness of scanned copies of this plan sheet.

REGISTERED PROFESSIONAL ENGINEER — Edgardo A. Isidro — No. C 58507 — Exp. 12-31-16 — CIVIL — STATE OF CALIFORNIA

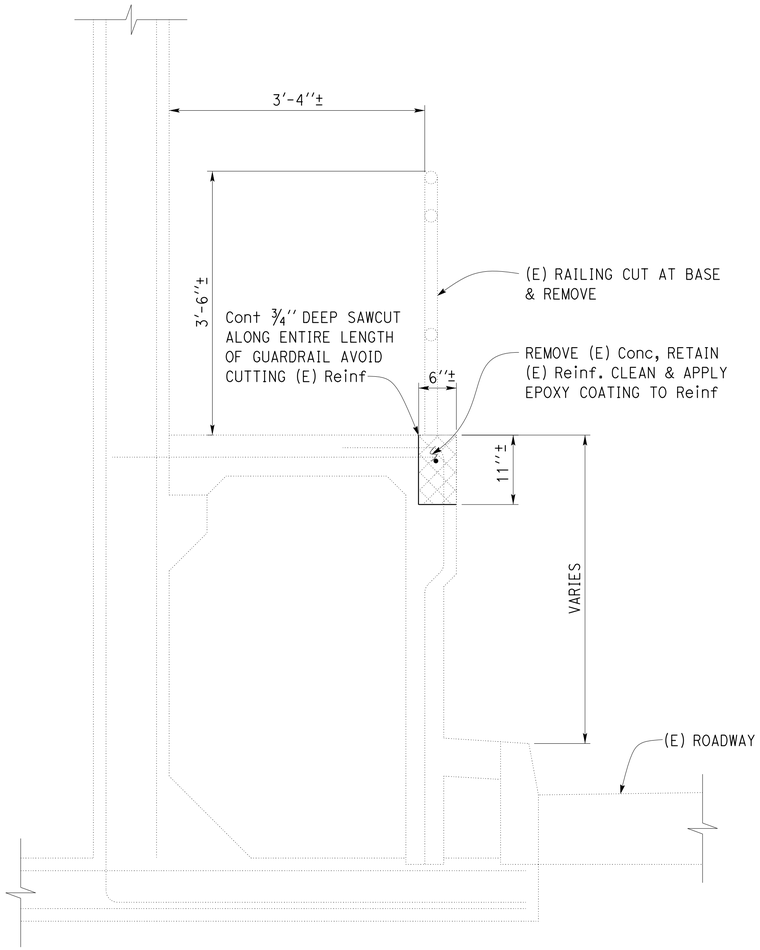

1 (E) GUARDRAIL REMOVAL AT TUNNEL APPROACHES

1'' = 1' - 0''

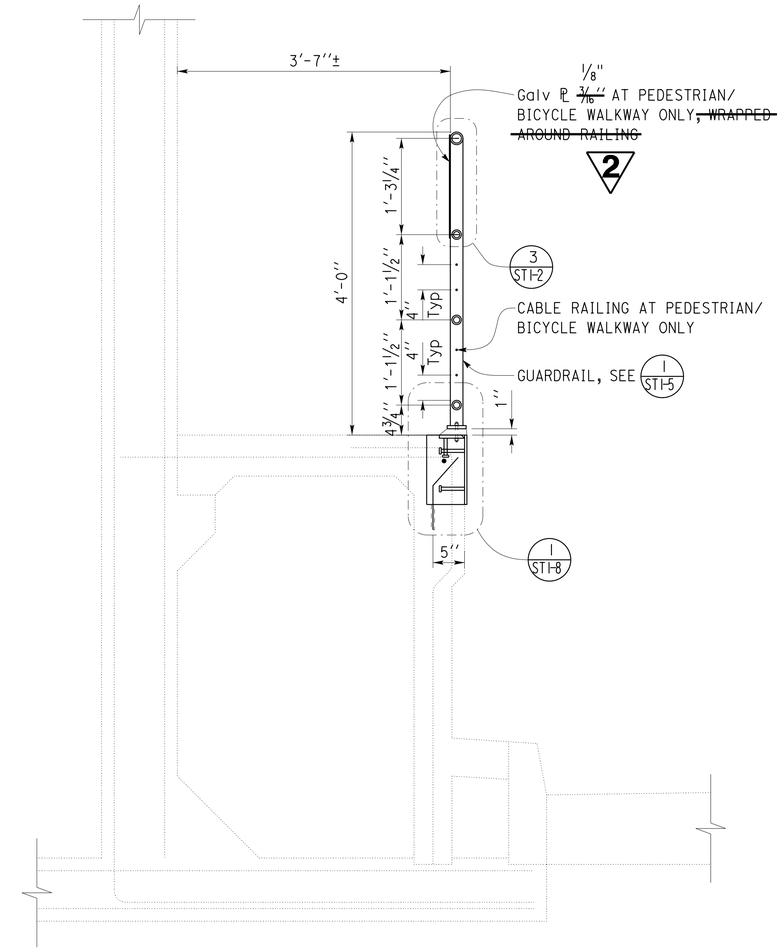

2 GUARDRAIL AT TUNNEL APPROACHES

1'' = 1' - 0''

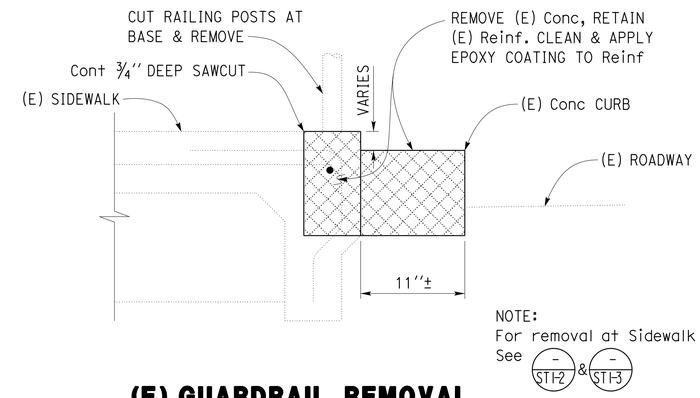

3 (E) GUARDRAIL REMOVAL AT TUNNEL APPROACHES

1½'' = 1' - 0''

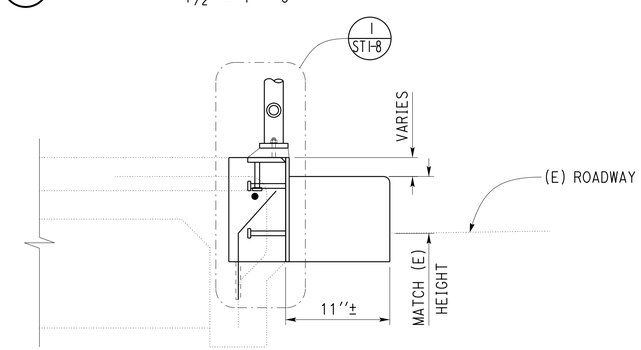

4 GUARDRAIL AT TUNNEL APPROACHES

1½'' = 1' - 0''

2 REPLACED PER ADDENDUM No. 2 DATED JULY 20, 2015

	BY	CHECKED
DESIGN	Edgardo Isidro	Bill Rocha
DETAILS	Daniel Harakh	Edgardo Isidro
QUANTITIES		

STATE OF CALIFORNIA — DEPARTMENT OF TRANSPORTATION

DIVISION OF ENGINEERING SERVICES — ARCHITECTURAL AND STRUCTURAL DESIGN

BRIDGE No. 33-106R — POST MILE R0.8/R2.0

POSEY TUBE BRIDGE REHABILITATION

POSEY TUBE GUARDRAIL — GUARDRAIL SECTION

SHEET ST1-4

TAEMWW Imperial - CCSC Rev. 02/13

ORIGINAL SCALE IN INCHES FOR REDUCED PLANS 0 1 2 3

UNIT: 3581 CONTRACT No.: 4A4800
PROJECT NUMBER & PHASE: 04000011371

DISREGARD PRINTS BEARING EARLIER REVISION DATES → 10-04-13 10-14-13 11-27-13 02-20-14 05-11-15

REVISION DATES (PRELIMINARY STAGE ONLY) — SHEET — OF

P:\dist_04\0400001137_posey_webster_tube\expedite\Addenda\Addendum No. 2\st01_04.dgn

20-JUL-2015 11:02

Dist	COUNTY	ROUTE	POST MILES TOTAL PROJECT	SHEET No.	TOTAL SHEETS
04	Ala	260	R0.8/R2.0	156	165

REGISTERED CIVIL ENGINEER — DATE 05-12-15

6-1-15
PLANS APPROVAL DATE

REGISTERED PROFESSIONAL ENGINEER — Edgardo A. Isidro — No. C 58507 — Exp. 12-31-16 — CIVIL — STATE OF CALIFORNIA

The State of California or its officers or agents shall not be responsible for the accuracy or completeness of scanned copies of this plan sheet.

2

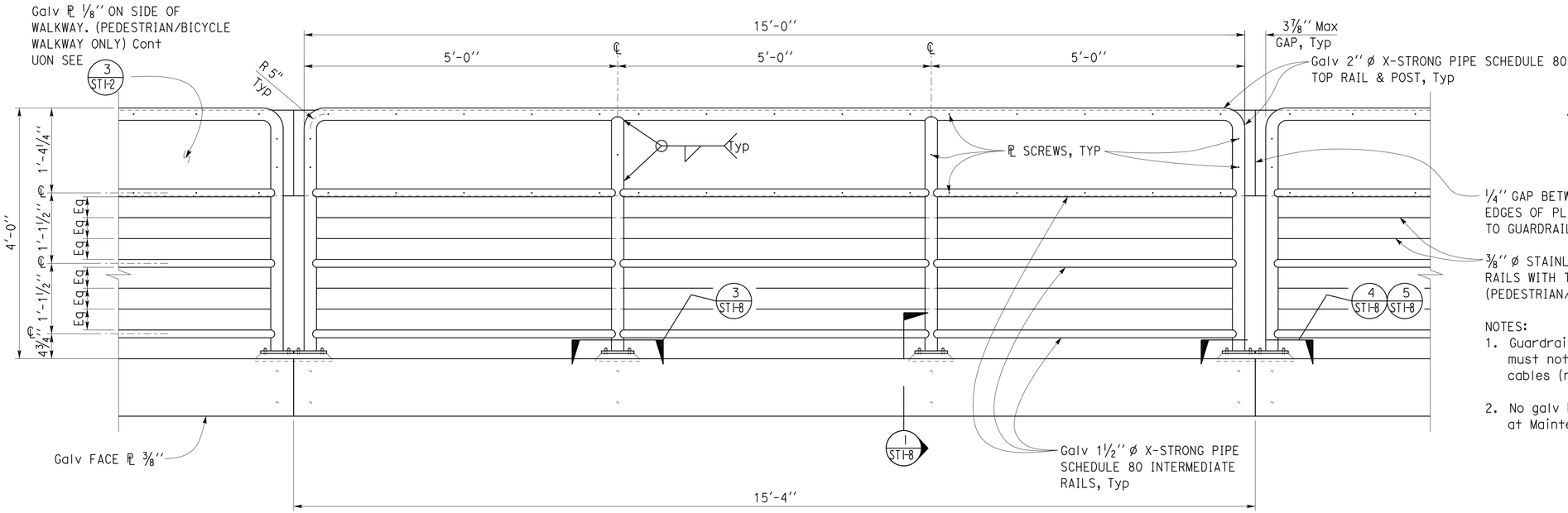

1/4'' GAP BETWEEN ADJACENT EDGES OF PLATES ATTACHED TO GUARDRAIL PIPES, Typ

3/8'' ø STAINLESS STEEL CABLE RAILS WITH TURNBUCKLES, Typ (PEDESTRIAN/BICYCLE WALKWAY ONLY)

NOTES:
1. Guardrail at Maintenance Walkway must not have access holes for cables (no cables).
2. No galv PL around railing Req'd at Maintenance Walkway.

1 TYPICAL GUARDRAIL
1'' = 1' - 0''

QUANTITIES

	WALKWAY	
GUARDRAIL	MAINTENANCE	4750 ± LF
	PEDESTRIAN/ BICYCLE	4750 ± LF
CHAIN LINK FENCE	MAINTENANCE	450 ± LF
	PEDESTRIAN/ BICYCLE	-
EXIT GATE DOOR	MAINTENANCE	17
	PEDESTRIAN/ BICYCLE	18

3 GUARDRAIL CHAIN LINK & GATE DOOR TABLE
NO SCALE

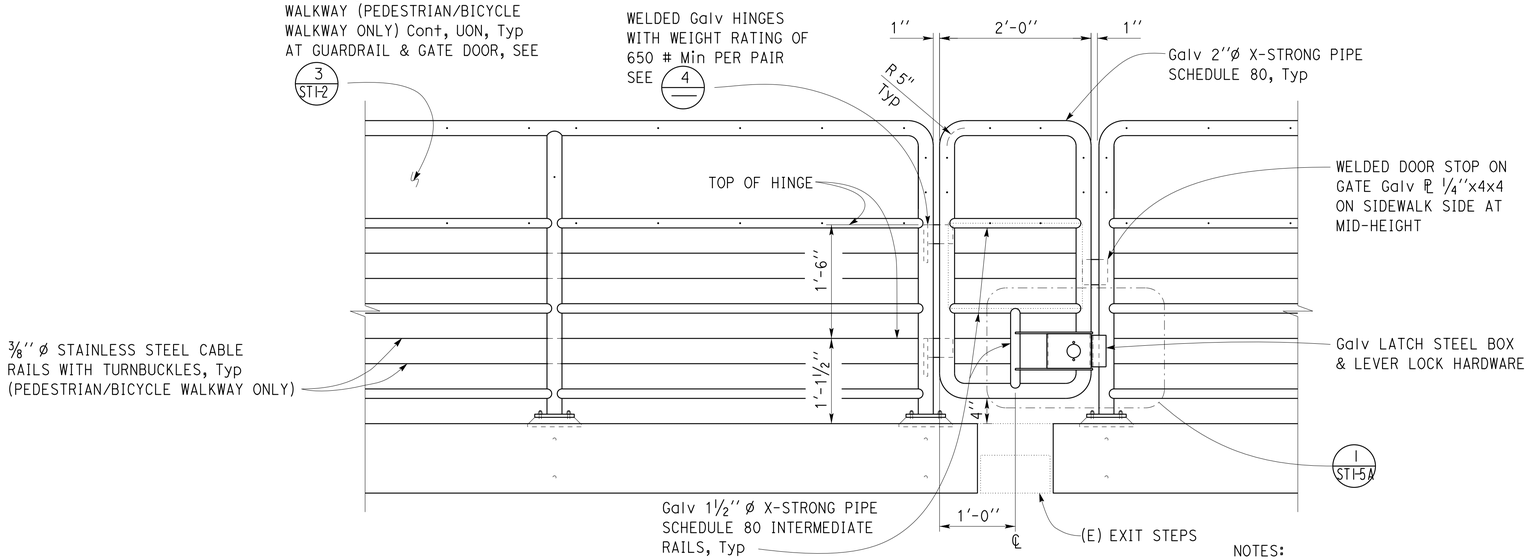

NOTES:
1. For Items not noted See 1
2. For 'Exit" Sign See 2 A1-1.1

2 EXIT GATE DOOR
1'' = 1' - 0''

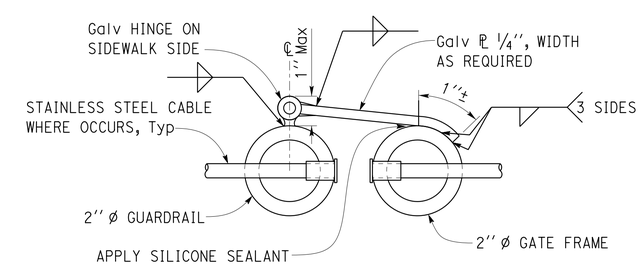

4 GATE HINGE DETAIL
NO SCALE

2 **REPLACED PER ADDENDUM No. 2 DATED JULY 20, 2015**

	BY	CHECKED
DESIGN	Edgardo Isidro	Bill Rocha
DETAILS	Daniel Harakh	Edgardo Isidro
QUANTITIES		

STATE OF CALIFORNIA — DEPARTMENT OF TRANSPORTATION

DIVISION OF ENGINEERING SERVICES — ARCHITECTURAL AND STRUCTURAL DESIGN

BRIDGE No. 33-106R — POST MILE R0.8/R2.0

POSEY TUBE BRIDGE REHABILITATION

POSEY TUBE GUARDRAIL — GUARDRAIL ELEVATIONS

SHEET ST1-5

TAEMWW Imperial - CCSC Rev. 02/13

ORIGINAL SCALE IN INCHES FOR REDUCED PLANS 0 1 2 3

UNIT: 3581 CONTRACT No.: 4A4800
PROJECT NUMBER & PHASE: 04000011371

DISREGARD PRINTS BEARING EARLIER REVISION DATES

REVISION DATES (PRELIMINARY STAGE ONLY) 11-27-13 02-04-14 02-19-14 02-24-14 02-26-14 05-11-15 10-04-13 10-16-13 11-14-13 — SHEET — OF

P:\dist_04\0400001137_posey_webster_tube\expedite\Addenda\Addendum No. 2\st01_05.dgn

20-JUL-2015 11:02