FOR NOTES AND ABBREVIATIONS, SEE SHEET DQ-1

Dist	COUNTY	ROUTE	POST MILES TOTAL PROJECT	SHEET No.	TOTAL SHEETS
04	SCI	101	48.7/52.0	301	993

REGISTERED CIVIL ENGINEER 05-13-11 DATE

7-11-11
PLANS APPROVAL DATE

REGISTERED PROFESSIONAL ENGINEER ANALETTE OCHOA No. C 55279 Exp. 12/31/12 CIVIL STATE OF CALIFORNIA

THE STATE OF CALIFORNIA OR ITS OFFICERS OR AGENTS SHALL NOT BE RESPONSIBLE FOR THE ACCURACY OR COMPLETENESS OF SCANNED COPIES OF THIS PLAN SHEET.

WRECO
1243 ALPINE ROAD
SUITE 108
WALNUT CREEK, CA 94596

SANTA CLARA VALLEY TRANSPORTATION AUTHORITY
3331 N FIRST STREET
SAN JOSE, CA 95134

DRAINAGE QUANTITIES

DRAINAGE SYSTEM No. ⬡	DRAINAGE UNIT ◯	REMOVE CULVERT (LF)	REMOVE INLET (EA)	REMOVE MH (EA)	REMOVE HEADWALL (EA)	REMOVE FES (EA)	REMOVE AUTOMATIC DRAINAGE GATE (EA)	REMOVE CONCRETE (MISCELLANEOUS) (CY)	CAP INLET (EA)	ADJUST INLET (EA)	18" ASP (LF)	12" ALTERNATIVE PIPE CULVERT (LF)	ALTERNATIVE PIPE CULVERT (TYPE A) 18" (LF)	ALTERNATIVE PIPE CULVERT (TYPE A) 24" (LF)	ALTERNATIVE PIPE CULVERT (TYPE A) 36" (LF)	ALTERNATIVE PIPE CULVERT (TYPE B) 18" (LF)	ALTERNATIVE PIPE CULVERT (TYPE B) 24" (LF)	ALTERNATIVE PIPE CULVERT (TYPE B) 30" (LF)	ALTERNATIVE PIPE CULVERT (TYPE B) 36" (LF)	ALTERNATIVE PIPE CULVERT (TYPE B) 42" (LF)	ALTERNATIVE PIPE CULVERT (TYPE B) 54" (LF)	14" x 23" OVAL RCP (CLASS III) (LF)	19" x 30" OVAL RCP (CLASS III) (LF)	18" CSP (LF)	18" AFES (EA)	24" AFES (EA)	30" AFES (EA)	36" AFES (EA)	24" TEE (N) (EA)	PIPE JOINT CLASSIFICATION (N)	MAXIMUM COVER (N) (LF)	DESCRIPTION	STATION	DRAINAGE PLAN No.	DRAINAGE SYSTEM No. ⬡	DRAINAGE UNIT ◯
15	c																																Abn Culv	116.96' Lt "C" 102+58.44 TO 80.43' Lt "C" 102+59.59	D-6	15	c
	d		1																														REMOVE DI	80.43' Lt "C" 102+59.59			d
16	a																																G2 DI w/ SGD (On Grade)	81.00' Lt "C" 101+50.00	D-6	16	a
	b															47														S	2.6	18" APC (B)	81.00' Lt "C" 101+50.00 TO 81.00' Lt "C" 102+00.00			b
	c																																G2 DI w/ SGD (In Grade Sag)	81.00' Lt "C" 102+00.00			c
	d															47														S	2.3	18" APC (B)	81.00' Lt "C" 102+00.00 TO 81.00' Lt "C" 102+50.00			d
	e																																G2 DI	81.00' Lt "C" 102+50.00			e
	f															347														S	2.3	18" APC (B)	81.00' Lt "C" 102+50.00 TO 81.00' Lt "C" 106+00.00			f
	g																																G2 DI	81.00' Lt "C" 106+00.00			g
	h															315														S	2.2	18" APC (B)	81.00' Lt "C" 106+00.00 TO 78.41' Lt "C" 109+17.58			h
	i																																G2 DI w/ SGD (In Grade Sag)	78.41' Lt "C" 109+17.58			i
17	a																																G2 DI	81.00' Lt "C" 113+00.00	D-7	17	a
	b															297														S	2.7	18" APC (B) w/ Conc Bkf	81.00' Lt "C" 113+00.00 TO 20.00' Lt "SANN-L" 116+00.00			b
	c																																G2 DI	20.00' Lt "SANN-L" 116+00.00			c
	d																					397								S	1.8	14"x23" OVAL RCP w/ Conc Bkf	20.00' Lt "SANN-L" 116+00.00 TO 26.80' Lt "SANN-L" 120+00.00			d
	e																																G2 DI w/ SGD (On Grade)	26.80' Lt "SANN-L" 120+00.00			e
	f																					47								S	1.9	14"x23" OVAL RCP w/ Conc Bkf	26.80' Lt "SANN-L" 120+00.00 TO 28.26' Lt "SANN-L" 120+50.00			f
	g																																G2 DI w/ SGD (On Grade)	28.26' Lt "SANN-L" 120+50.00			g
	h																					97								S	2.1	14"x23" OVAL RCP w/ Conc Bkf	28.26' Lt "SANN-L" 120+50.00 TO 31.17' Lt "SANN-L" 121+50.00			h
	i																																G2 DI w/ SGD (On Grade)	31.17' Lt "SANN-L" 121+50.00	D-8		i
	j																					215								S	2.2	14"x23" OVAL RCP w/ Conc Bkf	31.17' Lt "SANN-L" 121+50.00 TO 23.00' Lt "SANN" 123+67.49			j
	k																																G2 DI	23.00' Lt "SANN" 123+67.49			k
	l																					59								S	1.6	14"x23" OVAL RCP w/ Conc Bkf	23.00' Lt "SANN" 123+67.49 TO 23.00' Lt "SANN" 124+30.00			l
	m																																G2 DI w/ SGD (In Grade Sag)	23.00' Lt "SANN" 124+30.00			m
	n																					41								S	1.7	14"x23" OVAL RCP w/ Conc Bkf	23.00' Lt "SANN" 124+30.00 TO 23.01' Lt "SANN" 124+80.00			n
	o																																G2 DI w/ SGD (On Grade)	23.01' Lt "SANN" 124+80.00			o
	p																					38								S	1.8	14"x23" OVAL RCP w/ Conc Bkf (FSC)	23.01' Lt "SANN" 124+80.00 TO 17.38' Rt "SANN" 124+82.54			p
	q																																14"x23" Conc FES	17.38' Rt "SANN" 124+82.54			q
	r																																RSP (BACKING No. 2, METHOD B)	17.38' Rt "SANN" 124+82.54			r
SHEET TOTAL			1													1053						894											SHEET TOTAL				

DRAINAGE QUANTITIES DQ-19

CC 05/12/11
CC 12/16/10
CC 06/02/10
REVISED BY / DATE REVISED
CLAIRE COUGHLAN / ANALETTE OCHOA
CALCULATED-DESIGNED BY / CHECKED BY
CONSULTANT FUNCTIONAL SUPERVISOR: HAN-BIN LIANG
STATE OF CALIFORNIA - DEPARTMENT OF TRANSPORTATION
Caltrans

LAST REVISION 05-12-11
DATE PLOTTED => 15-JUL-2011
TIME PLOTTED => 11:06

FOR NOTES AND ABBREVIATIONS, SEE SHEET DQ-1

Dist	COUNTY	ROUTE	POST MILES TOTAL PROJECT	SHEET No.	TOTAL SHEETS
04	SCI	101	48.7/52.0	302	993

REGISTERED CIVIL ENGINEER 05-13-11 DATE

7-11-11
PLANS APPROVAL DATE

REGISTERED PROFESSIONAL ENGINEER ANALETTE OCHOA No. C 55279 Exp. 12/31/12 CIVIL STATE OF CALIFORNIA

THE STATE OF CALIFORNIA OR ITS OFFICERS OR AGENTS SHALL NOT BE RESPONSIBLE FOR THE ACCURACY OR COMPLETENESS OF SCANNED COPIES OF THIS PLAN SHEET.

WRECO
1243 ALPINE ROAD
SUITE 108
WALNUT CREEK, CA 94596

SANTA CLARA VALLEY TRANSPORTATION AUTHORITY
3331 N FIRST STREET
SAN JOSE, CA 95134

DRAINAGE QUANTITIES

DRAINAGE SYSTEM No.	DRAINAGE UNIT	ROCK SLOPE PROTECTION: BACKING No. 1, METHOD B (CY)	ROCK SLOPE PROTECTION: BACKING No 2, METHOD B (CY)	ROCK SLOPE PROTECTION: LIGHT, METHOD B (CY)	ROCK SLOPE PROTECTION: FABRIC (SQYD)	STRUCTURAL CONCRETE (HEADWALL) (CY)	CONCRETE BACKFILL (FAST SETTING CONCRETE) (CY)	MINOR CONCRETE: BACKFILL (CY)	MINOR CONCRETE: MINOR STRUCTURE (CY)	MINOR CONCRETE: DITCH LINING (CY)	MINOR CONCRETE: GUTTER DEPRESSION (CY)	PLACE HMA (Misc AREA) (SQYD)	MINOR HOT MIX ASPHALT (TON)	DITCH EXCAVATION (CY)	BAR REINFORCING STEEL (HEADWALL) (LB)	Misc IRON AND STEEL (LB)	WELDED WIRE FABRIC (6" x 6", W1.4 x W1.4)(N) (SQYD)	INLET FRAME AND GRATE (N): TYPE 24-12 (EA)	INLET FRAME AND GRATE (N): TYPE 18-9 (EA)	MH COVER (TYPE U45) (N) (EA)	HEIGHT OF INLET/MH (N) (LF)	CONCRETE COLLAR (N) (EA)	IMPORTED BIOFILTRATION SOIL (CY)	CLASS 1 PERMEABLE MATERIAL (CY)	ABANDON CULVERT (EA)	36" AUTOMATIC DRAINAGE GATE (EA)	42" AUTOMATIC DRAINAGE GATE (EA)	18" STEEL FLARED END SECTION (EA)	14"x23" OVAL SHAPED CONCRETE FLARED END SECTION (EA)	19"x30" OVAL SHAPED CONCRETE FLARED END SECTION (EA)	DESCRIPTION	STATION	DRAINAGE PLAN No.	DRAINAGE SYSTEM No.	DRAINAGE UNIT
15	c																								1.0						Abn Culv	116.96' Lt "C" 102+58.44 TO 80.43' Lt "C" 102+59.59	D-6	15	c
	d																														REMOVE DI	80.43' Lt "C" 102+59.59			d
16	a								1.6		1.2					326		1			4.2										G2 DI w/ SGD (On Grade)	81.00' Lt "C" 101+50.00	D-6	16	a
	b																														18" APC (B)	81.00' Lt "C" 101+50.00 TO 81.00' Lt "C" 102+00.00			b
	c								1.5		1.5					326		1			3.8										G2 DI w/ SGD (In Grade Sag)	81.00' Lt "C" 102+00.00			c
	d																														18" APC (B)	81.00' Lt "C" 102+00.00 TO 81.00' Lt "C" 102+50.00			d
	e								1.5							326		1			3.8										G2 DI	81.00' Lt "C" 102+50.00			e
	f																														18" APC (B)	81.00' Lt "C" 102+50.00 TO 81.00' Lt "C" 106+00.00			f
	g								1.5							326		1			3.8										G2 DI	81.00' Lt "C" 106+00.00			g
	h																														18" APC (B)	81.00' Lt "C" 106+00.00 TO 78.41' Lt "C" 109+17.58			h
	i								1.5		1.5					326		1			3.7										G2 DI w/ SGD (In Grade Sag)	78.41' Lt "C" 109+17.58			i
17	a								1.6							326		1			4.2										G2 DI	81.00' Lt "C" 113+00.00	D-7	17	a
	b							75.9																							18" APC (B) w/ Conc Bkf	81.00' Lt "C" 113+00.00 TO 20.00' Lt "SANN-L" 116+00.00			b
	c								1.3							326		1			2.8										G2 DI	20.00' Lt "SANN-L" 116+00.00			c
	d							94.7																							14"x23" OVAL RCP w/ Conc Bkf	20.00' Lt "SANN-L" 116+00.00 TO 26.80' Lt "SANN-L" 120+00.00			d
	e								1.3		1.2					326		1			3.0										G2 DI w/ SGD (On Grade)	26.80' Lt "SANN-L" 120+00.00			e
	f							11.2																							14"x23" OVAL RCP w/ Conc Bkf	26.80' Lt "SANN-L" 120+00.00 TO 28.26' Lt "SANN-L" 120+50.00			f
	g								1.4		1.2					326		1			3.2										G2 DI w/ SGD (On Grade)	28.26' Lt "SANN-L" 120+50.00			g
	h																														14"x23" OVAL RCP w/ Conc Bkf	28.26' Lt "SANN-L" 120+50.00 TO 31.17' Lt "SANN-L" 121+50.00			h
	i								1.4		1.2					326		1			3.4										G2 DI w/ SGD (On Grade)	31.17' Lt "SANN-L" 121+50.00	D-8		i
	j							51.3																							14"x23" OVAL RCP w/ Conc Bkf	31.17' Lt "SANN-L" 121+50.00 TO 23.00' Lt "SANN" 123+67.49			j
	k								1.2							326		1			2.7										G2 DI	23.00' Lt "SANN" 123+67.49			k
	l							14.1																							14"x23" OVAL RCP w/ Conc Bkf	23.00' Lt "SANN" 123+67.49 TO 23.00' Lt "SANN" 124+30.00			l
	m								1.2		1.5					326		1			2.4										G2 DI w/ SGD (In Grade Sag)	23.00' Lt "SANN" 124+30.00			m
	n							9.8																							14"x23" OVAL RCP w/ Conc Bkf	23.00' Lt "SANN" 124+30.00 TO 23.01' Lt "SANN" 124+80.00			n
	o								1.3		1.2					326		1			2.8										G2 DI w/ SGD (On Grade)	23.01' Lt "SANN" 124+80.00			o
	p						9.1																								14"x23" OVAL RCP w/ Conc Bkf (FSC)	23.01' Lt "SANN" 124+80.00 TO 17.38' Rt "SANN" 124+82.54			p
	q																												1		14"x23" Conc FES	17.38' Rt "SANN" 124+82.54			q
	r		4.4		17.0																										RSP (BACKING No. 2, METHOD B)	17.38' Rt "SANN" 124+82.54			r
SHEET TOTAL			4.4		17.0		9.1	256.9	18.3		10.1					4238		13							1.0				1		SHEET TOTAL				

DRAINAGE QUANTITIES DQ-20

CC 05/12/11
CC 12/16/10
CC 06/02/10
REVISED BY / DATE REVISED
CLAIRE COUGHLAN / ANALETTE OCHOA
CALCULATED-DESIGNED BY / CHECKED BY
CONSULTANT FUNCTIONAL SUPERVISOR: HAN-BIN LIANG
STATE OF CALIFORNIA - DEPARTMENT OF TRANSPORTATION
Caltrans

LAST REVISION 05-12-11
DATE PLOTTED => 15-JUL-2011
TIME PLOTTED => 11:06

FOR NOTES AND ABBREVIATIONS, SEE SHEET DQ-1

Dist	COUNTY	ROUTE	POST MILES TOTAL PROJECT	SHEET No.	TOTAL SHEETS
04	SCI	101	48.7/52.0	303	993

REGISTERED CIVIL ENGINEER 05-13-11 DATE

7-11-11
PLANS APPROVAL DATE

REGISTERED PROFESSIONAL ENGINEER ANALETTE OCHOA No. C 55279 Exp. 12/31/12 CIVIL STATE OF CALIFORNIA

THE STATE OF CALIFORNIA OR ITS OFFICERS OR AGENTS SHALL NOT BE RESPONSIBLE FOR THE ACCURACY OR COMPLETENESS OF SCANNED COPIES OF THIS PLAN SHEET.

WRECO
1243 ALPINE ROAD
SUITE 108
WALNUT CREEK, CA 94596

SANTA CLARA VALLEY TRANSPORTATION AUTHORITY
3331 N FIRST STREET
SAN JOSE, CA 95134

DRAINAGE QUANTITIES

DRAINAGE SYSTEM No. ⬡	DRAINAGE UNIT ◯	REMOVE CULVERT (LF)	REMOVE INLET (EA)	REMOVE MH (EA)	REMOVE HEADWALL (EA)	REMOVE FES (EA)	REMOVE AUTOMATIC DRAINAGE GATE (EA)	REMOVE CONCRETE (MISCELLANEOUS) (CY)	CAP INLET (EA)	ADJUST INLET (EA)	18" ASP (LF)	12" ALTERNATIVE PIPE CULVERT (LF)	ALTERNATIVE PIPE CULVERT (TYPE A) 18" (LF)	ALTERNATIVE PIPE CULVERT (TYPE A) 24" (LF)	ALTERNATIVE PIPE CULVERT (TYPE A) 36" (LF)	ALTERNATIVE PIPE CULVERT (TYPE B) 18" (LF)	ALTERNATIVE PIPE CULVERT (TYPE B) 24" (LF)	ALTERNATIVE PIPE CULVERT (TYPE B) 30" (LF)	ALTERNATIVE PIPE CULVERT (TYPE B) 36" (LF)	ALTERNATIVE PIPE CULVERT (TYPE B) 42" (LF)	ALTERNATIVE PIPE CULVERT (TYPE B) 54" (LF)	14" x 23" OVAL RCP (CLASS III) (LF)	19" x 30" OVAL RCP (CLASS III) (LF)	18" CSP (LF)	18" AFES (EA)	24" AFES (EA)	30" AFES (EA)	36" AFES (EA)	24" TEE (N) (EA)	PIPE JOINT CLASSIFICATION (N)	MAXIMUM COVER (N) (LF)	DESCRIPTION	STATION	DRAINAGE PLAN No.	DRAINAGE SYSTEM No. ⬡	DRAINAGE UNIT ◯
18	a																															G2 DI	81.00′ Rt "C" 113+00.00	D-7	18	a
	b																					297								S	1.2	14"x23" OVAL RCP w/ Conc Bkf	81.00′ Rt "C" 113+00.00 TO 81.17′ Rt "C" 116+00.00			b
	c																															G2 DI	81.17′ Rt "C" 116+00.00			c
	d																					197								S	1.3	14"x23" OVAL RCP w/ Conc Bkf	81.17′ Rt "C" 116+00.00 TO 83.00′ Rt "C" 118+00.00			d
	e																															G2 DI	83.00′ Rt "C" 118+00.00			e
	f																					47								S	1.2	14"x23" OVAL RCP w/ Conc Bkf	83.00′ Rt "C" 118+00.00 TO 83.00′ Rt "C" 118+50.00			f
	g																															G2 DI w/ SGD (In Grade Sag)	83.00′ Rt "C" 118+50.00			g
	h																					47								S	1.4	14"x23" OVAL RCP w/ Conc Bkf	83.00′ Rt "C" 118+50.00 TO 83.00′ Rt "C" 119+00.00			h
	i																															G2 DI w/ SGD (On Grade)	83.00′ Rt "C" 119+00.00			i
	j																															UNLINED V-DITCH	89.92′ Rt "C" 118+80.00 TO 25.62′ Rt "SASF" 120+27.73			j
	k																					117								S	1.9	14"x23" OVAL RCP w/ Conc Bkf	83.00′ Rt "C" 119+00.00 TO 20.00′ Rt "SASF" 120+27.86			k
	l																															G2 DI	20.00′ Rt "SASF" 120+27.86			l
	m															6														S	1.4	18" APC (B)	25.61′ Rt "SASF" 120+27.56 TO 20.00′ Rt "SASF" 120+27.86			m
	n																								1							18" AFES	25.61′ Rt "SASF" 120+27.56			n
	o																															RSP (BACKING No. 2, METHOD B)	25.61′ Rt "SASF" 120+27.56			o
	p																															UNLINED V-DITCH	25.62′ Rt "SASF" 120+27.73 TO 24.37′ Rt "SASF" 121+40.00			p
	q															69														S	1.5	18" APC (B) w/ Conc Bkf	20.00′ Rt "SASF" 120+27.86 TO 20.00′ Rt "SASF" 121+00.00			q
	r																															G2 DI w/ SGD (In Grade Sag)	20.00′ Rt "SASF" 121+00.00			r
	s															187														S	2.0	18" APC (B) w/ Conc Bkf	20.00′ Rt "SASF" 121+00.00 TO 20.00′ Rt "SASF" 122+90.00			s
	t																															G2 DI	20.00′ Rt "SASF" 122+90.00	D-9		t
	u															49														S	2.0	18" APC (B) w/ Conc Bkf	20.00′ Rt "SASF" 122+90.00 TO 20.00′ Rt "SASF" 123+40.95			u
	v																															G2 DI w/ SGD (In Grade Sag)	20.00′ Rt "SASF" 123+40.95			v
	w															66														S	1.8	18" APC (B) w/ Conc Bkf	20.00′ Rt "SASF" 123+40.95 TO 20.00′ Rt "SASF" 124+10.00			w
	x																															G2 DI w/ SGD (In Grade Sag)	20.00′ Rt "SASF" 124+10.00			x
	y															46														S	1.8	18" APC (B) w/ Conc Bkf	20.00′ Rt "SASF" 124+60.00 TO 20.00′ Rt "SASF" 124+10.00			y
	z																															G2 DI	20.00′ Rt "SASF" 124+60.00			z
	aa															28														S	1.8	18" APC (B) w/ Conc Bkf (FSC)	20.00′ Rt "SASF" 124+10.00 TO 10.66′ Rt "SASF" 124+10.35			aa
	ab																								1							18" AFES	10.66′ Rt "SASF" 124+10.35			ab
	ac																															RSP (BACKING No. 2, METHOD B)	10.66′ Rt "SASF" 124+10.35			ac
	ad																															LINED V-DITCH	82.66′ Rt "C" 124+20.00 TO 93.16′ Rt "C" 126+00.00			ad
SHEET TOTAL																451						705			2							SHEET TOTAL				

DRAINAGE QUANTITIES DQ-21

REVISED BY	DATE REVISED
CC	05/12/11
CC	12/16/10
CC	06/02/10

CALCULATED-DESIGNED BY: CLAIRE COUGHLAN
CHECKED BY: ANALETTE OCHOA
CONSULTANT FUNCTIONAL SUPERVISOR: HAN-BIN LIANG

STATE OF CALIFORNIA - DEPARTMENT OF TRANSPORTATION
Caltrans

FOR NOTES AND ABBREVIATIONS, SEE SHEET DQ-1

Dist	COUNTY	ROUTE	POST MILES TOTAL PROJECT	SHEET No.	TOTAL SHEETS
04	SCI	101	48.7/52.0	304	993

REGISTERED CIVIL ENGINEER 05-13-11 DATE

7-11-11
PLANS APPROVAL DATE

REGISTERED PROFESSIONAL ENGINEER ANALETTE OCHOA No. C 55279 Exp. 12/31/12 CIVIL STATE OF CALIFORNIA

THE STATE OF CALIFORNIA OR ITS OFFICERS OR AGENTS SHALL NOT BE RESPONSIBLE FOR THE ACCURACY OR COMPLETENESS OF SCANNED COPIES OF THIS PLAN SHEET.

WRECO
1243 ALPINE ROAD
SUITE 108
WALNUT CREEK, CA 94596

SANTA CLARA VALLEY TRANSPORTATION AUTHORITY
3331 N FIRST STREET
SAN JOSE, CA 95134

DRAINAGE QUANTITIES

DRAINAGE SYSTEM No.	DRAINAGE UNIT	ROCK SLOPE PROTECTION: BACKING No. 1, METHOD B (CY)	ROCK SLOPE PROTECTION: BACKING No 2, METHOD B (CY)	ROCK SLOPE PROTECTION: LIGHT, METHOD B (CY)	ROCK SLOPE PROTECTION: FABRIC (SQYD)	STRUCTURAL CONCRETE (HEADWALL) (CY)	CONCRETE BACKFILL (FAST SETTING CONCRETE) (CY)	MINOR CONCRETE: BACKFILL (CY)	MINOR CONCRETE: MINOR STRUCTURE (CY)	MINOR CONCRETE: DITCH LINING (CY)	MINOR CONCRETE: GUTTER DEPRESSION (CY)	PLACE HMA (Misc AREA) (SQYD)	MINOR HOT MIX ASPHALT (TON)	DITCH EXCAVATION (CY)	BAR REINFORCING STEEL (HEADWALL) (LB)	Misc IRON AND STEEL (LB)	WELDED WIRE FABRIC (6" x 6", W1.4 x W1.4)(N) (SQYD)	INLET FRAME AND GRATE (N): TYPE 24-12 (EA)	INLET FRAME AND GRATE (N): TYPE 18-9 (EA)	MH COVER (TYPE U45) (N) (EA)	HEIGHT OF INLET/MH (N) (LF)	CONCRETE COLLAR (N) (EA)	IMPORTED BIOFILTRATION SOIL (CY)	CLASS 1 PERMEABLE MATERIAL (CY)	ABANDON CULVERT (EA)	36" AUTOMATIC DRAINAGE GATE (EA)	42" AUTOMATIC DRAINAGE GATE (EA)	18" STEEL FLARED END SECTION (EA)	14"x23" OVAL SHAPED CONCRETE FLARED END SECTION (EA)	19"x30" OVAL SHAPED CONCRETE FLARED END SECTION (EA)	DESCRIPTION	STATION	DRAINAGE PLAN No.	DRAINAGE SYSTEM No.	DRAINAGE UNIT
18	a								1.2							326		1			2.4										G2 DI	81.00′ Rt "C" 113+00.00	D-7	18	a
	b							70.8																							14"x23" OVAL RCP w/ Conc Bkf	81.00′ Rt "C" 113+00.00 TO 81.17′ Rt "C" 116+00.00			b
	c								1.2							326		1			2.5										G2 DI	81.17′ Rt "C" 116+00.00			c
	d							47.0																							14"x23" OVAL RCP w/ Conc Bkf	81.17′ Rt "C" 116+00.00 TO 83.00′ Rt "C" 118+00.00			d
	e								1.2							326		1			2.4										G2 DI	83.00′ Rt "C" 118+00.00			e
	f							11.2																							14"x23" OVAL RCP w/ Conc Bkf	83.00′ Rt "C" 118+00.00 TO 83.00′ Rt "C" 118+50.00			f
	g								1.2		1.5					326		1			2.4										G2 DI w/ SGD (In Grade Sag)	83.00′ Rt "C" 118+50.00			g
	h							11.2																							14"x23" OVAL RCP w/ Conc Bkf	83.00′ Rt "C" 118+50.00 TO 83.00′ Rt "C" 119+00.00			h
	i								1.2		1.2					326		1			2.6										G2 DI w/ SGD (On Grade)	83.00′ Rt "C" 119+00.00			i
	j													1.6																	UNLINED V-DITCH	89.92′ Rt "C" 118+80.00 TO 25.62′ Rt "SASF" 120+27.73			j
	k							27.9																							14"x23" OVAL RCP w/ Conc Bkf	83.00′ Rt "C" 119+00.00 TO 20.00′ Rt "SASF" 120+27.86			k
	l								1.3							326		1			3.0										G2 DI	20.00′ Rt "SASF" 120+27.86			l
	m							1.5																							18" APC (B)	25.61′ Rt "SASF" 120+27.56 TO 20.00′ Rt "SASF" 120+27.86			m
	n																														18" AFES	25.61′ Rt "SASF" 120+27.56			n
	o		7.1		20.0																										RSP (BACKING No. 2, METHOD B)	25.61′ Rt "SASF" 120+27.56			o
	p													0.8																	UNLINED V-DITCH	25.62′ Rt "SASF" 120+27.73 TO 24.37′ Rt "SASF" 121+40.00			p
	q							17.6																							18" APC (B) w/ Conc Bkf	20.00′ Rt "SASF" 120+27.86 TO 20.00′ Rt "SASF" 121+00.00			q
	r								1.3		1.5					326		1			3.0										G2 DI w/ SGD (In Grade Sag)	20.00′ Rt "SASF" 121+00.00			r
	s							47.8																							18" APC (B) w/ Conc Bkf	20.00′ Rt "SASF" 121+00.00 TO 20.00′ Rt "SASF" 122+90.00			s
	t								1.4							326		1			3.5										G2 DI	20.00′ Rt "SASF" 122+90.00	D-9		t
	u							12.5																							18" APC (B) w/ Conc Bkf	20.00′ Rt "SASF" 122+90.00 TO 20.00′ Rt "SASF" 123+40.95			u
	v								1.3		1.5					326		1			3.1										G2 DI w/ SGD (In Grade Sag)	20.00′ Rt "SASF" 123+40.95			v
	w							16.9																							18" APC (B) w/ Conc Bkf	20.00′ Rt "SASF" 123+40.95 TO 20.00′ Rt "SASF" 124+10.00			w
	x								1.4		1.5					326		1			3.3										G2 DI w/ SGD (In Grade Sag)	20.00′ Rt "SASF" 124+10.00			x
	y							11.8																							18" APC (B) w/ Conc Bkf	20.00′ Rt "SASF" 124+60.00 TO 20.00′ Rt "SASF" 124+10.00			y
	z								1.4							326		1			3.2										G2 DI	20.00′ Rt "SASF" 124+60.00			z
	aa					7.2																									18" APC (B) w/ Conc Bkf (FSC)	20.00′ Rt "SASF" 124+10.00 TO 10.66′ Rt "SASF" 124+10.35			aa
	ab																														18" AFES	10.66′ Rt "SASF" 124+10.35			ab
	ac		9.5		25.0																										RSP (BACKING No. 2, METHOD B)	10.66′ Rt "SASF" 124+10.35			ac
	ad									18.0				50.6			54.1														LINED V-DITCH	82.66′ Rt "C" 124+20.00 TO 93.16′ Rt "C" 126+00.00			ad
SHEET TOTAL			16.6		45.0		7.2	276.2	14.0	18.0	7.0			53.0		3586	54.1	11													SHEET TOTAL				

DRAINAGE QUANTITIES DQ-22

REVISED BY	DATE REVISED
CC	05/12/11
CC	12/16/10
CC	06/02/10

CALCULATED-DESIGNED BY: CLAIRE COUGHLAN
CHECKED BY: ANALETTE OCHOA
CONSULTANT FUNCTIONAL SUPERVISOR: HAN-BIN LIANG

STATE OF CALIFORNIA - DEPARTMENT OF TRANSPORTATION
Caltrans

LAST REVISION 05-12-11
DATE PLOTTED => 15-JUL-2011
TIME PLOTTED => 11:06

FOR NOTES AND ABBREVIATIONS, SEE SHEET DQ-1

Dist	COUNTY	ROUTE	POST MILES TOTAL PROJECT	SHEET No.	TOTAL SHEETS
04	SCI	101	48.7/52.0	305	993

REGISTERED CIVIL ENGINEER 05-13-11 DATE

7-11-11
PLANS APPROVAL DATE

REGISTERED PROFESSIONAL ENGINEER ANALETTE OCHOA No. C 55279 Exp. 12/31/12 CIVIL STATE OF CALIFORNIA

THE STATE OF CALIFORNIA OR ITS OFFICERS OR AGENTS SHALL NOT BE RESPONSIBLE FOR THE ACCURACY OR COMPLETENESS OF SCANNED COPIES OF THIS PLAN SHEET.

WRECO
1243 ALPINE ROAD
SUITE 108
WALNUT CREEK, CA 94596

SANTA CLARA VALLEY
TRANSPORTATION AUTHORITY
3331 N FIRST STREET
SAN JOSE, CA 95134

DRAINAGE QUANTITIES

DRAINAGE SYSTEM No. ⬡	DRAINAGE UNIT ◯	REMOVE CULVERT (LF)	REMOVE INLET (EA)	REMOVE MH (EA)	REMOVE HEADWALL (EA)	REMOVE FES (EA)	REMOVE AUTOMATIC DRAINAGE GATE (EA)	REMOVE CONCRETE (MISCELLANEOUS) (CY)	CAP INLET (EA)	ADJUST INLET (EA)	18" ASP (LF)	12" ALTERNATIVE PIPE CULVERT (LF)	ALTERNATIVE PIPE CULVERT (TYPE A) (LF) 18"	24"	36"	ALTERNATIVE PIPE CULVERT (TYPE B) (LF) 18"	24"	30"	36"	42"	54"	14" x 23" OVAL RCP (CLASS III) (LF)	19" x 30" OVAL RCP (CLASS III) (LF)	18" CSP (LF)	18" AFES (EA)	24" AFES (EA)	30" AFES (EA)	36" AFES (EA)	24" TEE (N) (EA)	PIPE JOINT CLASSIFICATION (N)	MAXIMUM COVER (N) (LF)	DESCRIPTION	STATION	DRAINAGE PLAN No.	DRAINAGE SYSTEM No. ⬡	DRAINAGE UNIT ◯
19	a																															G2 DI w/ SGD (On Grade)	71.78′ Lt "C" 123+00.00	D-8	19	a
	b												47																S	2.7	18" APC (A)	71.78′ Lt "C" 123+00.00 TO 72.00′ Lt "C" 123+50.00			b
	c																														G2 DI w/ SGD (In Grade Sag)	72.00′ Lt "C" 123+50.00			c
	d												47																S	3.4	18" APC (A)	72.00′ Lt "C" 123+50.00 TO 72.00′ Lt "C" 124+00.00			d
	e																														G2 DI w/ SGD (On Grade)	72.00′ Lt "C" 124+00.00			e
	f															196													S	3.8	18" APC (B)	72.00′ Lt "C" 124+00.00 TO 72.00′ Lt "C" 125+99.25			f
	g	3																													REMOVE Culv (PORTION)	72.00′ Lt "C" 125+99.06 TO 70.06′ Lt "C" 125+99.16			g
	h																														G2 DI	72.00′ Lt "C" 125+99.25			h
	i												98																S	3.8	18" APC (A)	72.00′ Lt "C" 125+99.25 TO 72.00′ Lt "C" 127+00.00			i
	j																														G2 DI	72.00′ Lt "C" 127+00.00			j
	k															47													S	2.5	18" APC (B)	72.00′ Lt "C" 127+00.00 TO 71.00′ Lt "C" 127+50.00			k
	l																														G2 DI w/ SGD (In Grade Sag)	71.00′ Lt "C" 127+50.00			l
	m															47													S	2.1	18" APC (B)	71.00′ Lt "C" 127+50.00 TO 71.00′ Lt "C" 128+00.00			m
	n																														G2 DI w/ SGD (On Grade)	71.00′ Lt "C" 128+00.00			n
20	a																														RSP (BACKING No. 2, METHOD B)	133.33′ Lt "SANN-L" 125+51.59	D-8	20	a
	b																														DbI BIOFILTRATION SWALE	36.28′ Lt "SANN-L" 125+75.01 TO 133.33′ Lt "SANN-L" 125+51.59			b
	c																														RSP (BACKING No. 1, METHOD B)	33.61′ Lt "SANN-L" 125+90.32			c
	d																											1			24" TEE	33.61′ Lt "SANN-L" 125+90.32			d
	e																15												S	2.4	24" APC (B) w/ Conc Bkf	20.45′ Lt "SANN-L" 125+97.54 TO 33.61′ Lt "SANN-L" 125+90.32			e
	f																														GT4 DI	20.45′ Lt "SANN-L" 125+97.54			f
	g	2																													REMOVE Culv (PORTION)	18.48′ Lt "SANN-L" 125+99.12 TO 20.37′ Lt "SANN-L" 125+99.12			g
	h				1																										REMOVE HW	20.37′ Lt "SANN-L" 125+99.12			h
	i															100													S	3.1	18" APC (B) w/ Conc Bkf	22.50′ Lt "SANN-L" 127+00.00 TO 20.45′ Lt "SANN-L" 125+97.54			i
	j																														G2 DI	22.50′ Lt "SANN-L" 127+00.00			j
	k															53													S	1.8	18" APC (B) w/ Conc Bkf	23.00′ Lt "SANN-L" 127+60.00 TO 22.50′ Lt "SANN-L" 127+00.00			k
	l																														G2 DI	23.00′ Lt "SANN-L" 127+60.00			l
	m																					41							S	1.6	14"x23" OVAL RCP w/ Conc Bkf	23.00′ Lt "SANN-L" 127+60.00 TO 23.00′ Lt "SANN-L" 128+10.00			m
	n																														G2 DI w/ SGD (On Grade)	23.00′ Lt "SANN-L" 128+10.00			n
	o																					41							S	1.3	14"x23" OVAL RCP w/ Conc Bkf	23.00′ Lt "SANN-L" 128+10.00 TO 23.00′ Lt "SANN-L" 128+60.00			o
	p																														G2 DI	23.00′ Lt "SANN-L" 128+60.00			p
SHEET TOTAL		5			1								192			443	15					82						1			SHEET TOTAL				

DRAINAGE QUANTITIES DQ-23

CC 05/12/11
CC 12/16/10
CC 06/02/10
REVISED BY / DATE REVISED
CLAIRE COUGHLAN / ANALETTE OCHOA
CALCULATED-DESIGNED BY / CHECKED BY
CONSULTANT FUNCTIONAL SUPERVISOR: HAN-BIN LIANG
STATE OF CALIFORNIA - DEPARTMENT OF TRANSPORTATION
Caltrans

LAST REVISION 05-12-11
DATE PLOTTED => 15-JUL-2011
TIME PLOTTED => 11:06

FOR NOTES AND ABBREVIATIONS, SEE SHEET DQ-1

Dist	COUNTY	ROUTE	POST MILES TOTAL PROJECT	SHEET No.	TOTAL SHEETS
04	SCI	101	48.7/52.0	306	993

REGISTERED CIVIL ENGINEER 05-13-11 DATE

7-11-11
PLANS APPROVAL DATE

REGISTERED PROFESSIONAL ENGINEER ANALETTE OCHOA No. C 55279 Exp. 12/31/12 CIVIL STATE OF CALIFORNIA

THE STATE OF CALIFORNIA OR ITS OFFICERS OR AGENTS SHALL NOT BE RESPONSIBLE FOR THE ACCURACY OR COMPLETENESS OF SCANNED COPIES OF THIS PLAN SHEET.

WRECO
1243 ALPINE ROAD
SUITE 108
WALNUT CREEK, CA 94596

SANTA CLARA VALLEY TRANSPORTATION AUTHORITY
3331 N FIRST STREET
SAN JOSE, CA 95134

DRAINAGE QUANTITIES

DRAINAGE SYSTEM No.	DRAINAGE UNIT	ROCK SLOPE PROTECTION: BACKING No. 1, METHOD B (CY)	ROCK SLOPE PROTECTION: BACKING No 2, METHOD B (CY)	ROCK SLOPE PROTECTION: LIGHT, METHOD B (CY)	ROCK SLOPE PROTECTION: FABRIC (SQYD)	STRUCTURAL CONCRETE (HEADWALL) (CY)	CONCRETE BACKFILL (FAST SETTING CONCRETE) (CY)	MINOR CONCRETE: BACKFILL (CY)	MINOR CONCRETE: MINOR STRUCTURE (CY)	MINOR CONCRETE: DITCH LINING (CY)	MINOR CONCRETE: GUTTER DEPRESSION (CY)	PLACE HMA (Misc AREA) (SQYD)	MINOR HOT MIX ASPHALT (TON)	DITCH EXCAVATION (CY)	BAR REINFORCING STEEL (HEADWALL) (LB)	Misc IRON AND STEEL (LB)	WELDED WIRE FABRIC (6" x 6", W1.4 x W1.4)(N) (SQYD)	INLET FRAME AND GRATE (N): TYPE 24-12 (EA)	INLET FRAME AND GRATE (N): TYPE 18-9 (EA)	MH COVER (TYPE U45) (N) (EA)	HEIGHT OF INLET/MH (N) (LF)	CONCRETE COLLAR (N) (EA)	IMPORTED BIOFILTRATION SOIL (CY)	CLASS 1 PERMEABLE MATERIAL (CY)	ABANDON CULVERT (EA)	36" AUTOMATIC DRAINAGE GATE (EA)	42" AUTOMATIC DRAINAGE GATE (EA)	18" STEEL FLARED END SECTION (EA)	14"x23" OVAL SHAPED CONCRETE FLARED END SECTION (EA)	19"x30" OVAL SHAPED CONCRETE FLARED END SECTION (EA)	DESCRIPTION	STATION	DRAINAGE PLAN No.	DRAINAGE SYSTEM No.	DRAINAGE UNIT
19	a								1.5		1.2					326		1			3.8										G2 DI w/ SGD (On Grade)	71.78' Lt "C" 123+00.00	D-8	19	a
	b																														18" APC (A)	71.78' Lt "C" 123+00.00 TO 72.00' Lt "C" 123+50.00			b
	c								1.6		1.5					326		1			4.3										G2 DI w/ SGD (In Grade Sag)	72.00' Lt "C" 123+50.00			c
	d																														18" APC (A)	72.00' Lt "C" 123+50.00 TO 72.00' Lt "C" 124+00.00			d
	e								1.8		1.2					326		1			5.0										G2 DI w/ SGD (On Grade)	72.00' Lt "C" 124+00.00			e
	f																														18" APC (B)	72.00' Lt "C" 124+00.00 TO 72.00' Lt "C" 125+99.25			f
	g																														REMOVE Culv (PORTION)	72.00' Lt "C" 125+99.06 TO 70.06' Lt "C" 125+99.16			g
	h								1.9							326		1			5.3										G2 DI	72.00' Lt "C" 125+99.25			h
	i																														18" APC (A)	72.00' Lt "C" 125+99.25 TO 72.00' Lt "C" 127+00.00			i
	j								1.6							326		1			4.1										G2 DI	72.00' Lt "C" 127+00.00			j
	k																														18" APC (B)	72.00' Lt "C" 127+00.00 TO 71.00' Lt "C" 127+50.00			k
	l								1.5		1.5					326		1			3.7										G2 DI w/ SGD (In Grade Sag)	71.00' Lt "C" 127+50.00			l
	m																														18" APC (B)	71.00' Lt "C" 127+50.00 TO 71.00' Lt "C" 128+00.00			m
	n								1.5		1.2					326		1			3.6										G2 DI w/ SGD (On Grade)	71.00' Lt "C" 128+00.00			n
20	a		8.0		32.0																										RSP (BACKING No. 2, METHOD B)	133.33' Lt "SANN-L" 125+51.59	D-8	20	a
	b													96.3									239.7								DbI BIOFILTRATION SWALE	36.28' Lt "SANN-L" 125+75.01 TO 133.33' Lt "SANN-L" 125+51.59			b
	c	21.3			52.0																										RSP (BACKING No. 1, METHOD B)	33.61' Lt "SANN-L" 125+90.32			c
	d																														24" TEE	33.61' Lt "SANN-L" 125+90.32			d
	e							4.8																							24" APC (B) w/ Conc Bkf	20.45' Lt "SANN-L" 125+97.54 TO 33.61' Lt "SANN-L" 125+90.32			e
	f								2.4							652		2			4.7										GT4 DI	20.45' Lt "SANN-L" 125+97.54			f
	g																														REMOVE Culv (PORTION)	18.48' Lt "SANN-L" 125+99.12 TO 20.37' Lt "SANN-L" 125+99.12			g
	h																														REMOVE HW	20.37' Lt "SANN-L" 125+99.12			h
	i							25.5																							18" APC (B) w/ Conc Bkf	22.50' Lt "SANN-L" 127+00.00 TO 20.45' Lt "SANN-L" 125+97.54			i
	j								1.4							326		1			3.4										G2 DI	22.50' Lt "SANN-L" 127+00.00			j
	k							13.5																							18" APC (B) w/ Conc Bkf	23.00' Lt "SANN-L" 127+60.00 TO 22.50' Lt "SANN-L" 127+00.00			k
	l								1.2							326		1			2.7										G2 DI	23.00' Lt "SANN-L" 127+60.00			l
	m							9.8																							14"x23" OVAL RCP w/ Conc Bkf	23.00' Lt "SANN-L" 127+60.00 TO 23.00' Lt "SANN-L" 128+10.00			m
	n								1.2		1.2					326		1			2.4										G2 DI w/ SGD (On Grade)	23.00' Lt "SANN-L" 128+10.00			n
	o							9.8																							14"x23" OVAL RCP w/ Conc Bkf	23.00' Lt "SANN-L" 128+10.00 TO 23.00' Lt "SANN-L" 128+60.00			o
	p								1.2							326		1			2.5										G2 DI	23.00' Lt "SANN-L" 128+60.00			p
SHEET TOTAL		21.3	8.0		84.0			63.5	18.8		7.5			96.3		4238		13					239.7								SHEET TOTAL				

DRAINAGE QUANTITIES DQ-24

CC 05/12/11 | CC 12/16/10 | CC 06/02/10 | REVISED BY / DATE REVISED

CLAIRE COUGHLAN — ANALETTE OCHOA — CALCULATED-DESIGNED BY / CHECKED BY

CONSULTANT FUNCTIONAL SUPERVISOR: HAN-BIN LIANG

STATE OF CALIFORNIA - DEPARTMENT OF TRANSPORTATION — Caltrans

LAST REVISION 05-12-11 — DATE PLOTTED => 15-JUL-2011 — TIME PLOTTED => 11:06

FOR NOTES AND ABBREVIATIONS, SEE SHEET DQ-1

Dist	COUNTY	ROUTE	POST MILES TOTAL PROJECT	SHEET No.	TOTAL SHEETS
04	SCI	101	48.7/52.0	307	993

REGISTERED CIVIL ENGINEER 05-13-11 DATE

7-11-11
PLANS APPROVAL DATE

REGISTERED PROFESSIONAL ENGINEER ANALETTE OCHOA No. C 55279 Exp. 12/31/12 CIVIL STATE OF CALIFORNIA

THE STATE OF CALIFORNIA OR ITS OFFICERS OR AGENTS SHALL NOT BE RESPONSIBLE FOR THE ACCURACY OR COMPLETENESS OF SCANNED COPIES OF THIS PLAN SHEET.

WRECO
1243 ALPINE ROAD
SUITE 108
WALNUT CREEK, CA 94596

SANTA CLARA VALLEY
TRANSPORTATION AUTHORITY
3331 N FIRST STREET
SAN JOSE, CA 95134

DRAINAGE QUANTITIES

DRAINAGE SYSTEM No. ⬡	DRAINAGE UNIT ◯	REMOVE CULVERT (LF)	REMOVE INLET (EA)	REMOVE MH (EA)	REMOVE HEADWALL (EA)	REMOVE FES (EA)	REMOVE AUTOMATIC DRAINAGE GATE (EA)	REMOVE CONCRETE (MISCELLANEOUS) (CY)	CAP INLET (EA)	ADJUST INLET (EA)	18" ASP (LF)	12" ALTERNATIVE PIPE CULVERT (LF)	ALTERNATIVE PIPE CULVERT (TYPE A) (LF) 18"	24"	36"	ALTERNATIVE PIPE CULVERT (TYPE B) (LF) 18"	24"	30"	36"	42"	54"	14" x 23" OVAL RCP (CLASS III) (LF)	19" x 30" OVAL RCP (CLASS III) (LF)	18" CSP (LF)	18" AFES (EA)	24" AFES (EA)	30" AFES (EA)	36" AFES (EA)	24" TEE (N) (EA)	PIPE JOINT CLASSIFICATION (N)	MAXIMUM COVER (N) (LF)	DESCRIPTION	STATION	DRAINAGE PLAN No.	DRAINAGE SYSTEM No. ⬡	DRAINAGE UNIT ◯
21	a																															UNLINED V-DITCH	24.37′ Rt "SASF" 121+40.00 TO 28.38′ Rt "SASF" 125+40.00	D-9	21	a
	b																															RSP (BACKING No. 2, METHOD B)	31.26′ Rt "SASF" 125+42.50			b
	c																							1								18" AFES	31.26′ Rt "SASF" 125+42.50			c
	d												80																S	0.5	18" APC (A)	31.26′ Rt "SASF" 125+42.50 TO 34.02′ Lt "SASF" 125+87.36			d
	e																															UNLINED V-DITCH	28.38′ Rt "SASF" 125+40.00 TO 34.02′ Rt "SASF" 127+75.00			e
	f				1																											REMOVE HW	26.71′ Rt "SASF" 125+78.00			f
	g	42																														REMOVE Culv	26.71′ Rt "SASF" 125+78.00 TO 14.48′ Lt "SASF" 125+82.59			g
	h				1																											REMOVE HW	14.48′ Lt "SASF" 125+82.59			h
	i																							1								18" AFES	34.02′ Lt "SASF" 125+87.36			i
	j																															RSP (BACKING No. 2, METHOD B)	34.02′ Lt "SASF" 125+87.36			j
	k																															RSP (BACKING No. 2, METHOD B)	95.84′ Rt "C" 126+03.87			k
	l																															UNLINED TRAPEZOIDAL DITCH	95.84′ Rt "C" 126+03.87 TO 83.25′ Rt "C" 127+67.21			l
	m																															RSP (BACKING No. 2, METHOD B)	83.25′ Rt "C" 127+67.21			m
22	a				1																											REMOVE HW	81.09′ Rt "C" 128+66.39	D-9	22	a
	b																															G1 DI	81.09′ Rt "C" 128+66.39			b
	c															22													S	0.8	18" APC (B)	81.09′ Rt "C" 128+66.39 TO 92.66′ Rt "C" 128+87.17			c
	d																							1								18" AFES	92.66′ Rt "C" 128+87.17			d
	e																															RSP (LIGHT, METHOD B)	92.66′ Rt "C" 128+87.17			e
	f																															UNLINED TRAPEZOIDAL DITCH	97.75′ Rt "C" 128+90.00 TO 39.42′ Rt "SASF-L" 130+00.00			f
	g																															UNLINED TRAPEZOIDAL DITCH	39.42′ Rt "SASF-L" 130+00.00 TO 34.27′ Rt "SASF-L" 132+95.00			g
	h																															RSP (LIGHT, METHOD B)	30.79′ Rt "SASF-L" 133+00.00			h
	i																															HMA OVERSIDE DRAIN	23.85′ Rt "SASF-L" 133+00.00			i
SHEET TOTAL		42			3								80			22								3								SHEET TOTAL				

DRAINAGE QUANTITIES DQ-25

STATE OF CALIFORNIA - DEPARTMENT OF TRANSPORTATION
Caltrans

CONSULTANT FUNCTIONAL SUPERVISOR: HAN-BIN LIANG

CALCULATED-DESIGNED BY: ANALETTE OCHOA
CHECKED BY: CLAIRE COUGHLAN

REVISED BY / DATE REVISED:
CC 06/02/10
CC 12/16/10
CC 05/12/11

LAST REVISION 05-12-11
DATE PLOTTED => 15-JUL-2011
TIME PLOTTED => 11:06

FOR NOTES AND ABBREVIATIONS, SEE SHEET DQ-1

Dist	COUNTY	ROUTE	POST MILES TOTAL PROJECT	SHEET No.	TOTAL SHEETS
04	SCI	101	48.7/52.0	308	993

REGISTERED CIVIL ENGINEER 05-13-11 DATE

7-11-11
PLANS APPROVAL DATE

REGISTERED PROFESSIONAL ENGINEER ANALETTE OCHOA No. C 55279 Exp. 12/31/12 CIVIL STATE OF CALIFORNIA

THE STATE OF CALIFORNIA OR ITS OFFICERS OR AGENTS SHALL NOT BE RESPONSIBLE FOR THE ACCURACY OR COMPLETENESS OF SCANNED COPIES OF THIS PLAN SHEET.

WRECO
1243 ALPINE ROAD
SUITE 108
WALNUT CREEK, CA 94596

SANTA CLARA VALLEY TRANSPORTATION AUTHORITY
3331 N FIRST STREET
SAN JOSE, CA 95134

DRAINAGE QUANTITIES

DRAINAGE SYSTEM No.	DRAINAGE UNIT	ROCK SLOPE PROTECTION: BACKING No. 1, METHOD B (CY)	ROCK SLOPE PROTECTION: BACKING No 2, METHOD B (CY)	ROCK SLOPE PROTECTION: LIGHT, METHOD B (CY)	ROCK SLOPE PROTECTION: FABRIC (SQYD)	STRUCTURAL CONCRETE (HEADWALL) (CY)	CONCRETE BACKFILL (FAST SETTING CONCRETE) (CY)	MINOR CONCRETE: BACKFILL (CY)	MINOR CONCRETE: MINOR STRUCTURE (CY)	MINOR CONCRETE: DITCH LINING (CY)	MINOR CONCRETE: GUTTER DEPRESSION (CY)	PLACE HMA (Misc AREA) (SQYD)	MINOR HOT MIX ASPHALT (TON)	DITCH EXCAVATION (CY)	BAR REINFORCING STEEL (HEADWALL) (LB)	Misc IRON AND STEEL (LB)	WELDED WIRE FABRIC (6" x 6", W1.4 x W1.4)(N) (SQYD)	INLET FRAME AND GRATE (N): TYPE 24-12 (EA)	INLET FRAME AND GRATE (N): TYPE 18-9 (EA)	MH COVER (TYPE U45) (N) (EA)	HEIGHT OF INLET/MH (N) (LF)	CONCRETE COLLAR (N) (EA)	IMPORTED BIOFILTRATION SOIL (CY)	CLASS 1 PERMEABLE MATERIAL (CY)	ABANDON CULVERT (EA)	36" AUTOMATIC DRAINAGE GATE (EA)	42" AUTOMATIC DRAINAGE GATE (EA)	18" STEEL FLARED END SECTION (EA)	14"x23" OVAL SHAPED CONCRETE FLARED END SECTION (EA)	19"x30" OVAL SHAPED CONCRETE FLARED END SECTION (EA)	DESCRIPTION	STATION	DRAINAGE PLAN No.	DRAINAGE SYSTEM No.	DRAINAGE UNIT
21	a													10.7																	UNLINED V-DITCH	24.37' Rt "SASF" 121+40.00 TO 28.38' Rt "SASF" 125+40.00	D-9	21	a
	b		10.7		27.0																										RSP (BACKING No. 2, METHOD B)	31.26' Rt "SASF" 125+42.50			b
	c																														18" AFES	31.26' Rt "SASF" 125+42.50			c
	d																														18" APC (A)	31.26' Rt "SASF" 125+42.50 TO 34.02' Lt "SASF" 125+87.36			d
	e													12.6																	UNLINED V-DITCH	28.38' Rt "SASF" 125+40.00 TO 34.02' Rt "SASF" 127+75.00			e
	f																														REMOVE HW	26.71' Rt "SASF" 125+78.00			f
	g																														REMOVE Culv	26.71' Rt "SASF" 125+78.00 TO 14.48' Lt "SASF" 125+82.59			g
	h																														REMOVE HW	14.48' Lt "SASF" 125+82.59			h
	i																														18" AFES	34.02' Lt "SASF" 125+87.36			i
	j		3.5		14.0																										RSP (BACKING No. 2, METHOD B)	34.02' Lt "SASF" 125+87.36			j
	k		10.4		26.0																										RSP (BACKING No. 2, METHOD B)	95.84' Rt "C" 126+03.87			k
	l													35.4																	UNLINED TRAPEZOIDAL DITCH	95.84' Rt "C" 126+03.87 TO 83.25' Rt "C" 127+67.21			l
	m		2.6		10.0																										RSP (BACKING No. 2, METHOD B)	83.25' Rt "C" 127+67.21			m
22	a																														REMOVE HW	81.09' Rt "C" 128+66.39	D-9	22	a
	b								0.8							326		1			2.3										G1 DI	81.09' Rt "C" 128+66.39			b
	c																														18" APC (B)	81.09' Rt "C" 128+66.39 TO 92.66' Rt "C" 128+87.17			c
	d																														18" AFES	92.66' Rt "C" 128+87.17			d
	e			6.1	24.0																										RSP (LIGHT, METHOD B)	92.66' Rt "C" 128+87.17			e
	f													53.4																	UNLINED TRAPEZOIDAL DITCH	97.75' Rt "C" 128+90.00 TO 39.42' Rt "SASF-L" 130+00.00			f
	g													58.7																	UNLINED TRAPEZOIDAL DITCH	39.42' Rt "SASF-L" 130+00.00 TO 34.27' Rt "SASF-L" 132+95.00			g
	h			5.5	15.0																										RSP (LIGHT, METHOD B)	30.79' Rt "SASF-L" 133+00.00			h
	i											2.6	0.9																		HMA OVERSIDE DRAIN	23.85' Rt "SASF-L" 133+00.00			i
SHEET TOTAL			27.2	11.6	116.0				0.8			2.6	0.9	170.8		326		1													SHEET TOTAL				

DRAINAGE QUANTITIES DQ-26

STATE OF CALIFORNIA - DEPARTMENT OF TRANSPORTATION
Caltrans

CONSULTANT FUNCTIONAL SUPERVISOR: HAN-BIN LIANG

CALCULATED-DESIGNED BY: CLAIRE COUGHLAN
CHECKED BY: ANALETTE OCHOA

REVISED BY / DATE REVISED:
CC 06/02/10
CC 12/16/10
CC 05/12/11

LAST REVISION 05-12-11
DATE PLOTTED => 15-JUL-2011
TIME PLOTTED => 11:06

FOR NOTES AND ABBREVIATIONS, SEE SHEET DQ-1

Dist	COUNTY	ROUTE	POST MILES TOTAL PROJECT	SHEET No.	TOTAL SHEETS
04	SCI	101	48.7/52.0	309	993

REGISTERED CIVIL ENGINEER 05-13-11 DATE

7-11-11
PLANS APPROVAL DATE

REGISTERED PROFESSIONAL ENGINEER ANALETTE OCHOA No. C 55279 Exp. 12/31/12 CIVIL STATE OF CALIFORNIA

THE STATE OF CALIFORNIA OR ITS OFFICERS OR AGENTS SHALL NOT BE RESPONSIBLE FOR THE ACCURACY OR COMPLETENESS OF SCANNED COPIES OF THIS PLAN SHEET.

WRECO
1243 ALPINE ROAD
SUITE 108
WALNUT CREEK, CA 94596

SANTA CLARA VALLEY
TRANSPORTATION AUTHORITY
3331 N FIRST STREET
SAN JOSE, CA 95134

DRAINAGE QUANTITIES

DRAINAGE SYSTEM No. ⬡	DRAINAGE UNIT ◯	REMOVE CULVERT (LF)	REMOVE INLET (EA)	REMOVE MH (EA)	REMOVE HEADWALL (EA)	REMOVE FES (EA)	REMOVE AUTOMATIC DRAINAGE GATE (EA)	REMOVE CONCRETE (MISCELLANEOUS) (CY)	CAP INLET (EA)	ADJUST INLET (EA)	18" ASP (LF)	12" ALTERNATIVE PIPE CULVERT (LF)	ALTERNATIVE PIPE CULVERT (TYPE A) 18" (LF)	ALTERNATIVE PIPE CULVERT (TYPE A) 24" (LF)	ALTERNATIVE PIPE CULVERT (TYPE A) 36" (LF)	ALTERNATIVE PIPE CULVERT (TYPE B) 18" (LF)	ALTERNATIVE PIPE CULVERT (TYPE B) 24" (LF)	ALTERNATIVE PIPE CULVERT (TYPE B) 30" (LF)	ALTERNATIVE PIPE CULVERT (TYPE B) 36" (LF)	ALTERNATIVE PIPE CULVERT (TYPE B) 42" (LF)	ALTERNATIVE PIPE CULVERT (TYPE B) 54" (LF)	14" x 23" OVAL RCP (CLASS III) (LF)	19" x 30" OVAL RCP (CLASS III) (LF)	18" CSP (LF)	18" AFES (EA)	24" AFES (EA)	30" AFES (EA)	36" AFES (EA)	24" TEE (N) (EA)	PIPE JOINT CLASSIFICATION (N)	MAXIMUM COVER (N) (LF)	DESCRIPTION	STATION	DRAINAGE PLAN No.	DRAINAGE SYSTEM No. ⬡	DRAINAGE UNIT ◯
23	a																																G2 DI	20.00' Lt "SANF" 136+10.00	D-10	23	a
	b																					46									S	1.3	14"x23" OVAL RCP w/ Conc Bkf	20.00' Lt "SANF" 136+10.00 TO 20.00' Lt "SANF" 136+52.94			b
	c																																G2 DI w/ SGD (In Grade Sag)	20.00' Lt "SANF" 136+52.94			c
	d																					49									S	1.9	14"x23" OVAL RCP w/ Conc Bkf	20.00' Lt "SANF" 136+52.94 TO 20.00' Lt "SANF" 137+10.00			d
	e																																G2 DI	20.00' Lt "SANF" 137+10.00			e
	f															287															S	3.6	18" APC (B) w/ Conc Bkf	20.00' Lt "SANF" 137+10.00 TO 20.30' Lt "SANF" 140+00.00			f
	g																																G2 DI w/ SGD (On Grade)	20.30' Lt "SANF" 140+00.00			g
	h															47															S	3.9	18" APC (B)	20.30' Lt "SANF" 140+00.00 TO 83.00' Lt "C" 140+50.00			h
	i																																G2 DI w/ SGD (In Grade Sag)	83.00' Lt "C" 140+50.00			i
	j																			47											S	2.1	42" APC (B)	83.00' Lt "C" 140+50.00 TO 83.00' Lt "C" 141+00.00			j
	k																																G2 DI w/ SGD (On Grade)	83.00' Lt "C" 141+00.00			k
	l																			96											S	2.7	42" APC (B)	83.00' Lt "C" 141+00.00 TO 79.00' Lt "C" 142+00.00			l
	m																																G2 DI	79.00' Lt "C" 142+00.00			m
	n																			47											S	2.8	42" APC (B)	79.00' Lt "C" 142+00.00 TO 80.93' Lt "C" 142+46.16			n
	o																																G2 DI w/ SGD (On Grade)	80.93' Lt "C" 142+46.16			o
	p																			47											S	2.9	42" APC (B)	80.93' Lt "C" 142+46.16 TO 83.00' Lt "C" 143+00.00			p
	q																																G2 DI w/ SGD (In Grade Sag)	83.00' Lt "C" 143+00.00			q
	r																			22											S	3.1	42" APC (B)	83.00' Lt "C" 143+00.00 TO 83.00' Lt "C" 143+25.00			r
	s																																G2 DI w/ SGD (On Grade)	83.00' Lt "C" 143+25.00			s
	t																			12											S	3.3	42" APC (B)	83.00' Lt "C" 143+25.00 TO 80.05' Lt "C" 143+40.00			t
	u																																42" AUTOMATIC DRAINAGE GATE	80.05' Lt "C" 143+40.00			u
	v																																G2 MH (PRESSURE MH FRAME & COVER)	80.05' Lt "C" 143+40.00			v
	w															7															S	3.4	18" APC (B) w/ Conc COLLAR	80.05' Lt "C" 143+40.00 TO 80.38' Lt "C" 143+48.85			w
SHEET TOTAL																341				271		95												SHEET TOTAL				

DRAINAGE QUANTITIES DQ-27

REVISED BY	DATE REVISED
CC	05/12/11
CC	12/16/10
CC	06/02/10

CALCULATED-DESIGNED BY: CLAIRE COUGHLAN
CHECKED BY: ANALETTE OCHOA
CONSULTANT FUNCTIONAL SUPERVISOR: HAN-BIN LIANG

STATE OF CALIFORNIA - DEPARTMENT OF TRANSPORTATION
Caltrans

FOR NOTES AND ABBREVIATIONS, SEE SHEET DQ-1

Dist	COUNTY	ROUTE	POST MILES TOTAL PROJECT	SHEET No.	TOTAL SHEETS
04	SCI	101	48.7/52.0	310	993

REGISTERED CIVIL ENGINEER 05-13-11 DATE

7-11-11
PLANS APPROVAL DATE

REGISTERED PROFESSIONAL ENGINEER ANALETTE OCHOA No. C 55279 Exp. 12/31/12 CIVIL STATE OF CALIFORNIA

THE STATE OF CALIFORNIA OR ITS OFFICERS OR AGENTS SHALL NOT BE RESPONSIBLE FOR THE ACCURACY OR COMPLETENESS OF SCANNED COPIES OF THIS PLAN SHEET.

WRECO
1243 ALPINE ROAD
SUITE 108
WALNUT CREEK, CA 94596

SANTA CLARA VALLEY
TRANSPORTATION AUTHORITY
3331 N FIRST STREET
SAN JOSE, CA 95134

DRAINAGE QUANTITIES

DRAINAGE SYSTEM No.	DRAINAGE UNIT	ROCK SLOPE PROTECTION: BACKING No. 1, METHOD B (CY)	ROCK SLOPE PROTECTION: BACKING No 2, METHOD B (CY)	ROCK SLOPE PROTECTION: LIGHT, METHOD B (CY)	ROCK SLOPE PROTECTION: FABRIC (SQYD)	STRUCTURAL CONCRETE (HEADWALL) (CY)	CONCRETE BACKFILL (FAST SETTING CONCRETE) (CY)	MINOR CONCRETE: BACKFILL (CY)	MINOR CONCRETE: MINOR STRUCTURE (CY)	MINOR CONCRETE: DITCH LINING (CY)	MINOR CONCRETE: GUTTER DEPRESSION (CY)	PLACE HMA (Misc AREA) (SQYD)	MINOR HOT MIX ASPHALT (TON)	DITCH EXCAVATION (CY)	BAR REINFORCING STEEL (HEADWALL) (LB)	Misc IRON AND STEEL (LB)	WELDED WIRE FABRIC (6" x 6", W1.4 x W1.4)(N) (SQYD)	INLET FRAME AND GRATE (N): TYPE 24-12 (EA)	INLET FRAME AND GRATE (N): TYPE 18-9 (EA)	MH COVER (TYPE U45) (N) (EA)	HEIGHT OF INLET/MH (N) (LF)	CONCRETE COLLAR (N) (EA)	IMPORTED BIOFILTRATION SOIL (CY)	CLASS 1 PERMEABLE MATERIAL (CY)	ABANDON CULVERT (EA)	36" AUTOMATIC DRAINAGE GATE (EA)	42" AUTOMATIC DRAINAGE GATE (EA)	18" STEEL FLARED END SECTION (EA)	14"x23" OVAL SHAPED CONCRETE FLARED END SECTION (EA)	19"x30" OVAL SHAPED CONCRETE FLARED END SECTION (EA)	DESCRIPTION	STATION	DRAINAGE PLAN No.	DRAINAGE SYSTEM No.	DRAINAGE UNIT
23	a								1.2							326		1			2.4										G2 DI	20.00′ Lt "SANF" 136+10.00	D-10	23	a
	b							11.0																							14"x23" OVAL RCP w/ Conc Bkf	20.00′ Lt "SANF" 136+10.00 TO 20.00′ Lt "SANF" 136+52.94			b
	c								1.2		1.5					326		1			2.5										G2 DI w/ SGD (In Grade Sag)	20.00′ Lt "SANF" 136+52.94			c
	d							11.7																							14"x23" OVAL RCP w/ Conc Bkf	20.00′ Lt "SANF" 136+52.94 TO 20.00′ Lt "SANF" 137+10.00			d
	e								1.3							326		1			3.1										G2 DI	20.00′ Lt "SANF" 137+10.00			e
	f							73.3																							18" APC (B) w/ Conc Bkf	20.00′ Lt "SANF" 137+10.00 TO 20.30′ Lt "SANF" 140+00.00			f
	g								1.9		1.2					326		1			5.2										G2 DI w/ SGD (On Grade)	20.30′ Lt "SANF" 140+00.00			g
	h																														18" APC (B)	20.30′ Lt "SANF" 140+00.00 TO 83.00′ Lt "C" 140+50.00			h
	i								1.9		1.5					326		1			5.5										G2 DI w/ SGD (In Grade Sag)	83.00′ Lt "C" 140+50.00			i
	j																														42" APC (B)	83.00′ Lt "C" 140+50.00 TO 83.00′ Lt "C" 141+00.00			j
	k								2.0		1.2					326		1			5.7										G2 DI w/ SGD (On Grade)	83.00′ Lt "C" 141+00.00			k
	l																														42" APC (B)	83.00′ Lt "C" 141+00.00 TO 79.00′ Lt "C" 142+00.00			l
	m								2.2							326		1			6.3										G2 DI	79.00′ Lt "C" 142+00.00			m
	n																														42" APC (B)	79.00′ Lt "C" 142+00.00 TO 80.93′ Lt "C" 142+46.16			n
	o								2.2		1.2					326		1			6.4										G2 DI w/ SGD (On Grade)	80.93′ Lt "C" 142+46.16			o
	p																														42" APC (B)	80.93′ Lt "C" 142+46.16 TO 83.00′ Lt "C" 143+00.00			p
	q								2.2		1.5					326		1			6.5										G2 DI w/ SGD (In Grade Sag)	83.00′ Lt "C" 143+00.00			q
	r																														42" APC (B)	83.00′ Lt "C" 143+00.00 TO 83.00′ Lt "C" 143+25.00			r
	s								2.2		1.2					326		1			6.7										G2 DI w/ SGD (On Grade)	83.00′ Lt "C" 143+25.00			s
	t																														42" APC (B)	83.00′ Lt "C" 143+25.00 TO 80.05′ Lt "C" 143+40.00			t
	u																										1				42" AUTOMATIC DRAINAGE GATE	80.05′ Lt "C" 143+40.00			u
	v								2.3							435				1	7.0										G2 MH (PRESSURE MH FRAME & COVER)	80.05′ Lt "C" 143+40.00			v
	w																						1								18" APC (B) w/ Conc COLLAR	80.05′ Lt "C" 143+40.00 TO 80.38′ Lt "C" 143+48.85			w
SHEET TOTAL								96.0	20.6		9.0					3695		10		1		1					1				SHEET TOTAL				

DRAINAGE QUANTITIES DQ-28

REVISED BY	DATE REVISED
CC	05/12/11
CC	12/16/10
CC	06/02/10

CALCULATED-DESIGNED BY: CLAIRE COUGHLAN
CHECKED BY: ANALETTE OCHOA
CONSULTANT FUNCTIONAL SUPERVISOR: HAN-BIN LIANG

STATE OF CALIFORNIA - DEPARTMENT OF TRANSPORTATION
Caltrans

LAST REVISION 05-12-11
DATE PLOTTED => 15-JUL-2011
TIME PLOTTED => 11:07

FOR NOTES AND ABBREVIATIONS, SEE SHEET DQ-1

Dist	COUNTY	ROUTE	POST MILES TOTAL PROJECT	SHEET No.	TOTAL SHEETS
04	SCI	101	48.7/52.0	311	993

REGISTERED CIVIL ENGINEER 05-13-11 DATE

7-11-11
PLANS APPROVAL DATE

REGISTERED PROFESSIONAL ENGINEER ANALETTE OCHOA No. C 55279 Exp. 12/31/12 CIVIL STATE OF CALIFORNIA

THE STATE OF CALIFORNIA OR ITS OFFICERS OR AGENTS SHALL NOT BE RESPONSIBLE FOR THE ACCURACY OR COMPLETENESS OF SCANNED COPIES OF THIS PLAN SHEET.

WRECO
1243 ALPINE ROAD
SUITE 108
WALNUT CREEK, CA 94596

SANTA CLARA VALLEY
TRANSPORTATION AUTHORITY
3331 N FIRST STREET
SAN JOSE, CA 95134

DRAINAGE QUANTITIES

DRAINAGE SYSTEM No. ⬡	DRAINAGE UNIT ◯	REMOVE CULVERT (LF)	REMOVE INLET (EA)	REMOVE MH (EA)	REMOVE HEADWALL (EA)	REMOVE FES (EA)	REMOVE AUTOMATIC DRAINAGE GATE (EA)	REMOVE CONCRETE (MISCELLANEOUS) (CY)	CAP INLET (EA)	ADJUST INLET (EA)	18" ASP (LF)	12" ALTERNATIVE PIPE CULVERT (LF)	ALTERNATIVE PIPE CULVERT (TYPE A) 18" (LF)	ALTERNATIVE PIPE CULVERT (TYPE A) 24" (LF)	ALTERNATIVE PIPE CULVERT (TYPE A) 36" (LF)	ALTERNATIVE PIPE CULVERT (TYPE B) 18" (LF)	ALTERNATIVE PIPE CULVERT (TYPE B) 24" (LF)	ALTERNATIVE PIPE CULVERT (TYPE B) 30" (LF)	ALTERNATIVE PIPE CULVERT (TYPE B) 36" (LF)	ALTERNATIVE PIPE CULVERT (TYPE B) 42" (LF)	ALTERNATIVE PIPE CULVERT (TYPE B) 54" (LF)	14" x 23" OVAL RCP (CLASS III) (LF)	19" x 30" OVAL RCP (CLASS III) (LF)	18" CSP (LF)	18" AFES (EA)	24" AFES (EA)	30" AFES (EA)	36" AFES (EA)	24" TEE (N) (EA)	PIPE JOINT CLASSIFICATION (N)	MAXIMUM COVER (N) (LF)	DESCRIPTION	STATION	DRAINAGE PLAN No.	DRAINAGE SYSTEM No. ⬡	DRAINAGE UNIT ◯
24	a										58																			S		18" ASP w/ END CAP	2.79' Rt "C" 137+48.31 TO 1.82' Rt "C" 138+07.64	D-10	24	a
	b									1																						Adj DI	1.82' Rt "C" 138+07.64			b
	c										87																			S		18" ASP	1.82' Rt "C" 138+07.64 TO 1.26' Rt "C" 138+98.00			c
	d									1																						Adj DI	1.26' Rt "C" 138+98.00			d
	e										50																			S		18" ASP	1.26' Rt "C" 138+98.00 TO 1.81' Rt "C" 139+51.22			e
	f									1																						Adj DI	1.81' Rt "C" 139+51.22			f
	g										49																			S		18" ASP w/ END CAP	1.81' Rt "C" 139+51.22 TO 2.38' Rt "C" 140+00.00			g
	h									1																						Adj DI	1.44' Rt "C" 140+98.47			h
	i										282																			S		18" ASP	1.67' Rt "C" 143+83.81 TO 1.44' Rt "C" 140+98.47			i
	j									1																						Adj DI	1.67' Rt "C" 143+83.81			j
	k										113																			S		18" ASP	1.47' Rt "C" 144+99.46 TO 1.67' Rt "C" 143+83.81			k
	l									1																						Adj DI	1.47' Rt "C" 144+99.46			l
	m										97																			S		18" ASP	0.99' Rt "C" 145+99.27 TO 1.47' Rt "C" 144+99.46			m
	n									1																						Adj DI	0.99' Rt "C" 145+99.27			n
	o										49																			S		18" ASP w/ END CAP	1.68' Rt "C" 146+50.00 TO 0.99' Rt "C" 145+99.27			o
	p									1																						Adj DI	1.52' Rt "C" 147+97.48	D-11		p
	q										101																			S		18" ASP w/ END CAP	1.52' Rt "C" 147+97.48 TO 2.02' Rt "C" 149+00.00	D-11		q
	r																															UNLINED V-DITCH	86.05' Rt "C" 135+50.00 TO 87.33' Rt "C" 144+62.00	D-10		r
	s	87																														REMOVE Culv	1.54' Rt "C" 138+07.64 TO 0.95' Rt "C" 138+97.90			s
	t																															UNLINED V-DITCH	84.22' Rt "C" 144+95.88 TO 84.77' Rt "C" 151+50.00			t
	u																															RSP (BACKING No. 2, METHOD B)	84.77' Rt "C" 151+50.00			u
25	a															9														S	4.6	18" APC (B) w/ Conc COLLAR	80.38' Lt "C" 143+48.85 TO 80.05' Lt "C" 143+60.00	D-10	25	a
	b																															G2 MH (PRESSURE MH FRAME & COVER)	80.05' Lt "C" 143+60.00			b
	c																															36" AUTOMATIC DRAINAGE GATE	80.05' Lt "C" 143+60.00			c
	d																		37											S	3.0	36" APC (B)	80.05' Lt "C" 143+60.00 TO 83.00' Lt "C" 144+00.00			d
	e																															G2 DI w/ SGD (On Grade)	83.00' Lt "C" 144+00.00			e
	f																		347											S	3.0	36" APC (B)	83.00' Lt "C" 144+00.00 TO 83.00' Lt "C" 147+50.00			f
	g																															G2 DI w/ SGD (On Grade)	83.00' Lt "C" 147+50.00	D-11		g
	h																		47											S	2.8	36" APC (B)	83.00' Lt "C" 147+50.00 TO 83.00' Lt "C" 148+00.00			h
	i																															G2 DI w/ SGD (In Grade Sag)	83.00' Lt "C" 148+00.00			i
	j																		47											S	2.4	36" APC (B)	83.00' Lt "C" 148+00.00 TO 83.00' Lt "C" 148+00.00			j
	k																															G2 DI	83.00' Lt "C" 148+50.00			k
SHEET TOTAL		87								8	886					9			478													SHEET TOTAL				

DRAINAGE QUANTITIES DQ-29

CC 05/12/11
CC 12/16/10
CC 06/02/10
REVISED BY / DATE REVISED
CLAIRE COUGHLAN / ANALETTE OCHOA
CALCULATED-DESIGNED BY / CHECKED BY
CONSULTANT FUNCTIONAL SUPERVISOR: HAN-BIN LIANG
STATE OF CALIFORNIA - DEPARTMENT OF TRANSPORTATION
Caltrans

LAST REVISION 05-12-11
DATE PLOTTED => 15-JUL-2011
TIME PLOTTED => 11:07

FOR NOTES AND ABBREVIATIONS, SEE SHEET DQ-1

Dist	COUNTY	ROUTE	POST MILES TOTAL PROJECT	SHEET No.	TOTAL SHEETS
04	SCI	101	48.7/52.0	312	993

REGISTERED CIVIL ENGINEER 05-13-11 DATE

7-11-11
PLANS APPROVAL DATE

REGISTERED PROFESSIONAL ENGINEER ANALETTE OCHOA No. C 55279 Exp. 12/31/12 CIVIL STATE OF CALIFORNIA

THE STATE OF CALIFORNIA OR ITS OFFICERS OR AGENTS SHALL NOT BE RESPONSIBLE FOR THE ACCURACY OR COMPLETENESS OF SCANNED COPIES OF THIS PLAN SHEET.

WRECO
1243 ALPINE ROAD
SUITE 108
WALNUT CREEK, CA 94596

SANTA CLARA VALLEY TRANSPORTATION AUTHORITY
3331 N FIRST STREET
SAN JOSE, CA 95134

DRAINAGE QUANTITIES

DRAINAGE SYSTEM No.	DRAINAGE UNIT	ROCK SLOPE PROTECTION: BACKING No. 1, METHOD B (CY)	ROCK SLOPE PROTECTION: BACKING No 2, METHOD B (CY)	ROCK SLOPE PROTECTION: LIGHT, METHOD B (CY)	ROCK SLOPE PROTECTION: FABRIC (SQYD)	STRUCTURAL CONCRETE (HEADWALL) (CY)	CONCRETE BACKFILL (FAST SETTING CONCRETE) (CY)	MINOR CONCRETE: BACKFILL (CY)	MINOR CONCRETE: MINOR STRUCTURE (CY)	MINOR CONCRETE: DITCH LINING (CY)	MINOR CONCRETE: GUTTER DEPRESSION (CY)	PLACE HMA (Misc AREA) (SQYD)	MINOR HOT MIX ASPHALT (TON)	DITCH EXCAVATION (CY)	BAR REINFORCING STEEL (HEADWALL) (LB)	Misc IRON AND STEEL (LB)	WELDED WIRE FABRIC (6" x 6", W1.4 x W1.4)(N) (SQYD)	INLET FRAME AND GRATE (N): TYPE 24-12 (EA)	INLET FRAME AND GRATE (N): TYPE 18-9 (EA)	MH COVER (TYPE U45) (N) (EA)	HEIGHT OF INLET/MH (N) (LF)	CONCRETE COLLAR (N) (EA)	IMPORTED BIOFILTRATION SOIL (CY)	CLASS 1 PERMEABLE MATERIAL (CY)	ABANDON CULVERT (EA)	36" AUTOMATIC DRAINAGE GATE (EA)	42" AUTOMATIC DRAINAGE GATE (EA)	18" STEEL FLARED END SECTION (EA)	14"x23" OVAL SHAPED CONCRETE FLARED END SECTION (EA)	19"x30" OVAL SHAPED CONCRETE FLARED END SECTION (EA)	DESCRIPTION	STATION	DRAINAGE PLAN No.	DRAINAGE SYSTEM No.	DRAINAGE UNIT
24	a																														18" ASP w/ END CAP	2.79' Rt "C" 137+48.31 TO 1.82' Rt "C" 138+07.64	D-10	24	a
	b																														Adj DI	1.82' Rt "C" 138+07.64			b
	c																														18" ASP	1.82' Rt "C" 138+07.64 TO 1.26' Rt "C" 138+98.00			c
	d																														Adj DI	1.26' Rt "C" 138+98.00			d
	e																														18" ASP	1.26' Rt "C" 138+98.00 TO 1.81' Rt "C" 139+51.22			e
	f																														Adj DI	1.81' Rt "C" 139+51.22			f
	g																														18" ASP w/ END CAP	1.81' Rt "C" 139+51.22 TO 2.38' Rt "C" 140+00.00			g
	h																														Adj DI	1.44' Rt "C" 140+98.47			h
	i																														18" ASP	1.67' Rt "C" 143+83.81 TO 1.44' Rt "C" 140+98.47			i
	j																														Adj DI	1.67' Rt "C" 143+83.81			j
	k																														18" ASP	1.47' Rt "C" 144+99.46 TO 1.67' Rt "C" 143+83.81			k
	l																														Adj DI	1.47' Rt "C" 144+99.46			l
	m																														18" ASP	0.99' Rt "C" 145+99.27 TO 1.47' Rt "C" 144+99.46			m
	n																														Adj DI	0.99' Rt "C" 145+99.27			n
	o																														18" ASP w/ END CAP	1.68' Rt "C" 146+50.00 TO 0.99' Rt "C" 145+99.27			o
	p																														Adj DI	1.52' Rt "C" 147+97.48	D-11		p
	q																														18" ASP w/ END CAP	1.52' Rt "C" 147+97.48 TO 2.02' Rt "C" 149+00.00	D-11		q
	r													610.7																	UNLINED V-DITCH	86.05' Rt "C" 135+50.00 TO 87.33' Rt "C" 144+62.00	D-10		r
	s																														REMOVE Culv	1.54' Rt "C" 138+07.64 TO 0.95' Rt "C" 138+97.90			s
	t													151.4																	UNLINED V-DITCH	84.22' Rt "C" 144+95.88 TO 84.77' Rt "C" 151+50.00			t
	u		2.6		10.0																										RSP (BACKING No. 2, METHOD B)	84.77' Rt "C" 151+50.00			u
25	a																					1									18" APC (B) w/ Conc COLLAR	80.38' Lt "C" 143+48.85 TO 80.05' Lt "C" 143+60.00	D-10	25	a
	b							2.1							435				1	6.2											G2 MH (PRESSURE MH FRAME & COVER)	80.05' Lt "C" 143+60.00			b
	c																									1					36" AUTOMATIC DRAINAGE GATE	80.05' Lt "C" 143+60.00			c
	d																														36" APC (B)	80.05' Lt "C" 143+60.00 TO 83.00' Lt "C" 144+00.00			d
	e							2.1		1.2					326			1		6.0											G2 DI w/ SGD (On Grade)	83.00' Lt "C" 144+00.00			e
	f																														36" APC (B)	83.00' Lt "C" 144+00.00 TO 83.00' Lt "C" 147+50.00			f
	g							2.1		1.2					326			1		5.9											G2 DI w/ SGD (On Grade)	83.00' Lt "C" 147+50.00	D-11		g
	h																														36" APC (B)	83.00' Lt "C" 147+50.00 TO 83.00' Lt "C" 148+00.00			h
	i							2.0		1.5					326			1		5.5											G2 DI w/ SGD (In Grade Sag)	83.00' Lt "C" 148+00.00			i
	j																														36" APC (B)	83.00' Lt "C" 148+50.00 TO 83.00' Lt "C" 148+00.00			j
	k							2.0							326			1		5.5											G2 DI	83.00' Lt "C" 148+50.00			k
SHEET TOTAL			2.6		10.0			10.2		3.8				762.1	1739			4	1			1				1					SHEET TOTAL				

DRAINAGE QUANTITIES DQ-30

STATE OF CALIFORNIA - DEPARTMENT OF TRANSPORTATION
Caltrans

CONSULTANT FUNCTIONAL SUPERVISOR: HAN-BIN LIANG

CALCULATED-DESIGNED BY: CLAIRE COUGHLAN
CHECKED BY: ANALETTE OCHOA

REVISED BY / DATE REVISED:
CC 06/02/10
CC 12/16/10
CC 05/12/11

LAST REVISION 05-12-11
DATE PLOTTED => 15-JUL-2011
TIME PLOTTED => 11:07

FOR NOTES AND ABBREVIATIONS, SEE SHEET DQ-1

Dist	COUNTY	ROUTE	POST MILES TOTAL PROJECT	SHEET No.	TOTAL SHEETS
04	SCI	101	48.7/52.0	313	993

REGISTERED CIVIL ENGINEER 05-13-11 DATE

7-11-11
PLANS APPROVAL DATE

REGISTERED PROFESSIONAL ENGINEER ANALETTE OCHOA No. C 55279 Exp. 12/31/12 CIVIL STATE OF CALIFORNIA

THE STATE OF CALIFORNIA OR ITS OFFICERS OR AGENTS SHALL NOT BE RESPONSIBLE FOR THE ACCURACY OR COMPLETENESS OF SCANNED COPIES OF THIS PLAN SHEET.

WRECO
1243 ALPINE ROAD
SUITE 108
WALNUT CREEK, CA 94596

SANTA CLARA VALLEY
TRANSPORTATION AUTHORITY
3331 N FIRST STREET
SAN JOSE, CA 95134

DRAINAGE QUANTITIES

DRAINAGE SYSTEM No. ⬡	DRAINAGE UNIT ◯	REMOVE CULVERT (LF)	REMOVE INLET (EA)	REMOVE MH (EA)	REMOVE HEADWALL (EA)	REMOVE FES (EA)	REMOVE AUTOMATIC DRAINAGE GATE (EA)	REMOVE CONCRETE (MISCELLANEOUS) (CY)	CAP INLET (EA)	ADJUST INLET (EA)	18" ASP (LF)	12" ALTERNATIVE PIPE CULVERT (LF)	ALTERNATIVE PIPE CULVERT (TYPE A) 18" (LF)	ALTERNATIVE PIPE CULVERT (TYPE A) 24" (LF)	ALTERNATIVE PIPE CULVERT (TYPE A) 36" (LF)	ALTERNATIVE PIPE CULVERT (TYPE B) 18" (LF)	ALTERNATIVE PIPE CULVERT (TYPE B) 24" (LF)	ALTERNATIVE PIPE CULVERT (TYPE B) 30" (LF)	ALTERNATIVE PIPE CULVERT (TYPE B) 36" (LF)	ALTERNATIVE PIPE CULVERT (TYPE B) 42" (LF)	ALTERNATIVE PIPE CULVERT (TYPE B) 54" (LF)	14" x 23" OVAL RCP (CLASS III) (LF)	19" x 30" OVAL RCP (CLASS III) (LF)	18" CSP (LF)	18" AFES (EA)	24" AFES (EA)	30" AFES (EA)	36" AFES (EA)	24" TEE (N) (EA)	PIPE JOINT CLASSIFICATION (N)	MAXIMUM COVER (N) (LF)	DESCRIPTION	STATION	DRAINAGE PLAN No.	DRAINAGE SYSTEM No. ⬡	DRAINAGE UNIT ◯
25	l															147														S	4.0	18" APC (B)	83.00′ Lt "C" 148+50.00 TO 79.00′ Lt "C" 150+00.00	D-11	25	l
	m																															G2 DI w/ SGD (On Grade)	79.00′ Lt "C" 150+00.00			m
	n															97														S	3.9	18" APC (B)	83.00′ Lt "C" 151+00.00 TO 79.00′ Lt "C" 150+00.00			n
	o																															G2 DI w/ SGD (On Grade)	83.00′ Lt "C" 151+00.00			o
26	a	10																														REMOVE Culv (PORTION)	69.37′ Rt "C" 151+48.11 TO 79.00′ Rt "C" 151+49.45	D-11	26	a
	b																															G2 DI	71.31′ Rt "C" 151+48.41			b
	c															49														S	2.9	18" APC (B)	71.00′ Rt "C" 152+00.00 TO 71.31′ Rt "C" 151+48.41			c
	d																															G2 DI	71.00′ Rt "C" 152+00.00			d
	e															47														S	2.4	18" APC (B) w/ Conc Bkf	71.00′ Rt "C" 152+50.00 TO 71.00′ Rt "C" 152+00.00			e
	f																															G2 DI w/ SGD (In Grade Sag)	71.00′ Rt "C" 152+50.00			f
	g															47														S	1.8	18" APC (B) w/ Conc Bkf	71.00′ Rt "C" 153+00.00 TO 71.00′ Rt "C" 152+50.00			g
	h																															G2 DI w/ SGD (On Grade)	71.00′ Rt "C" 153+00.00			h
	i															97														S	1.7	18" APC (B) w/ Conc Bkf	71.00′ Rt "C" 154+00.00 TO 71.00′ Rt "C" 153+00.00			i
	j																															G2 DI w/ SGD (On Grade)	71.00′ Rt "C" 154+00.00			j
	k															47														S	1.5	18" APC (B) w/ Conc Bkf	71.00′ Rt "C" 154+50.00 TO 71.00′ Rt "C" 154+00.00			k
	l																															G2 DI w/ SGD (On Grade)	71.00′ Rt "C" 154+50.00			l
	m															147														S	1.3	18" APC (B) w/ Conc Bkf	71.00′ Rt "C" 156+00.00 TO 71.00′ Rt "C" 154+50.00			m
	n																															G2 DI w/ SGD (On Grade)	71.00′ Rt "C" 156+00.00			n
	o																					147								S	1.4	14"x23" OVAL RCP w/ Conc Bkf	71.00′ Rt "C" 157+50.00 TO 71.00′ Rt "C" 156+00.00			o
	p																															G2 DI w/ SGD (On Grade)	71.00′ Rt "C" 157+50.00			p
	q																					147								S	1.3	14"x23" OVAL RCP w/ Conc Bkf	71.00′ Rt "C" 159+00.00 TO 71.00′ Rt "C" 157+50.00			q
	r																															G2 DI w/ SGD (On Grade)	71.00′ Rt "C" 159+00.00			r
SHEET TOTAL		10														531						294										SHEET TOTAL				

DRAINAGE QUANTITIES DQ-31

REVISED BY	DATE REVISED
CC	05/12/11
CC	12/16/10
CC	06/02/10

CALCULATED-DESIGNED BY: CLAIRE COUGHLAN
CHECKED BY: ANALETTE OCHOA
CONSULTANT FUNCTIONAL SUPERVISOR: HAN-BIN LIANG

STATE OF CALIFORNIA - DEPARTMENT OF TRANSPORTATION
Caltrans

LAST REVISION 05-12-11
DATE PLOTTED => 15-JUL-2011
TIME PLOTTED => 11:07

FOR NOTES AND ABBREVIATIONS, SEE SHEET DQ-1

Dist	COUNTY	ROUTE	POST MILES TOTAL PROJECT	SHEET No.	TOTAL SHEETS
04	SCI	101	48.7/52.0	314	993

REGISTERED CIVIL ENGINEER 05-13-11 DATE

7-11-11
PLANS APPROVAL DATE

REGISTERED PROFESSIONAL ENGINEER ANALETTE OCHOA No. C 55279 Exp. 12/31/12 CIVIL STATE OF CALIFORNIA

THE STATE OF CALIFORNIA OR ITS OFFICERS OR AGENTS SHALL NOT BE RESPONSIBLE FOR THE ACCURACY OR COMPLETENESS OF SCANNED COPIES OF THIS PLAN SHEET.

WRECO
1243 ALPINE ROAD
SUITE 108
WALNUT CREEK, CA 94596

SANTA CLARA VALLEY TRANSPORTATION AUTHORITY
3331 N FIRST STREET
SAN JOSE, CA 95134

DRAINAGE QUANTITIES

DRAINAGE SYSTEM No.	DRAINAGE UNIT	ROCK SLOPE PROTECTION: BACKING No. 1, METHOD B (CY)	ROCK SLOPE PROTECTION: BACKING No 2, METHOD B (CY)	ROCK SLOPE PROTECTION: LIGHT, METHOD B (CY)	ROCK SLOPE PROTECTION: FABRIC (SQYD)	STRUCTURAL CONCRETE (HEADWALL) (CY)	CONCRETE BACKFILL (FAST SETTING CONCRETE) (CY)	MINOR CONCRETE: BACKFILL (CY)	MINOR CONCRETE: MINOR STRUCTURE (CY)	MINOR CONCRETE: DITCH LINING (CY)	MINOR CONCRETE: GUTTER DEPRESSION (CY)	PLACE HMA (Misc AREA) (SQYD)	MINOR HOT MIX ASPHALT (TON)	DITCH EXCAVATION (CY)	BAR REINFORCING STEEL (HEADWALL) (LB)	Misc IRON AND STEEL (LB)	WELDED WIRE FABRIC (6" x 6", W1.4 x W1.4)(N) (SQYD)	INLET FRAME AND GRATE (N): TYPE 24-12 (EA)	INLET FRAME AND GRATE (N): TYPE 18-9 (EA)	MH COVER (TYPE U45) (N) (EA)	HEIGHT OF INLET/MH (N) (LF)	CONCRETE COLLAR (N) (EA)	IMPORTED BIOFILTRATION SOIL (CY)	CLASS 1 PERMEABLE MATERIAL (CY)	ABANDON CULVERT (EA)	36" AUTOMATIC DRAINAGE GATE (EA)	42" AUTOMATIC DRAINAGE GATE (EA)	18" STEEL FLARED END SECTION (EA)	14"x23" OVAL SHAPED CONCRETE FLARED END SECTION (EA)	19"x30" OVAL SHAPED CONCRETE FLARED END SECTION (EA)	DESCRIPTION	STATION	DRAINAGE PLAN No.	DRAINAGE SYSTEM No.	DRAINAGE UNIT
25	l																													18" APC (B)	83.00′ Lt "C" 148+50.00 TO 79.00′ Lt "C" 150+00.00	D-11	25	l
	m								2.0		1.2					326		1			5.5									G2 DI w/ SGD (On Grade)	79.00′ Lt "C" 150+00.00			m
	n																													18" APC (B)	83.00′ Lt "C" 151+00.00 TO 79.00′ Lt "C" 150+00.00			n
	o								1.9		1.2					326		1			5.3									G2 DI w/ SGD (On Grade)	83.00′ Lt "C" 151+00.00			o
26	a																													REMOVE Culv (PORTION)	69.37′ Rt "C" 151+48.11 TO 79.00′ Rt "C" 151+49.45	D-11	26	a
	b								1.7							326		1			4.6									G2 DI	71.31′ Rt "C" 151+48.41			b
	c																													18" APC (B)	71.00′ Rt "C" 152+00.00 TO 71.31′ Rt "C" 151+48.41			c
	d								1.6							326		1			4.0									G2 DI	71.00′ Rt "C" 152+00.00			d
	e							12.0																						18" APC (B) w/ Conc Bkf	71.00′ Rt "C" 152+50.00 TO 71.00′ Rt "C" 152+00.00			e
	f								1.4		1.5					326		1			3.4									G2 DI w/ SGD (In Grade Sag)	71.00′ Rt "C" 152+50.00			f
	g							12.0																						18" APC (B) w/ Conc Bkf	71.00′ Rt "C" 153+00.00 TO 71.00′ Rt "C" 152+50.00			g
	h								1.4		1.2					326		1			3.3									G2 DI w/ SGD (On Grade)	71.00′ Rt "C" 153+00.00			h
	i							24.8																						18" APC (B) w/ Conc Bkf	71.00′ Rt "C" 154+00.00 TO 71.00′ Rt "C" 153+00.00			i
	j								1.3		1.2					326		1			3.1									G2 DI w/ SGD (On Grade)	71.00′ Rt "C" 154+00.00			j
	k							12.0																						18" APC (B) w/ Conc Bkf	71.00′ Rt "C" 154+50.00 TO 71.00′ Rt "C" 154+00.00			k
	l								1.3		1.2					326		1			2.9									G2 DI w/ SGD (On Grade)	71.00′ Rt "C" 154+50.00			l
	m							37.6																						18" APC (B) w/ Conc Bkf	71.00′ Rt "C" 156+00.00 TO 71.00′ Rt "C" 154+50.00			m
	n								1.2		1.2					326		1			2.7									G2 DI w/ SGD (On Grade)	71.00′ Rt "C" 156+00.00			n
	o							35.1																						14"x23" OVAL RCP w/ Conc Bkf	71.00′ Rt "C" 157+50.00 TO 71.00′ Rt "C" 156+00.00			o
	p								1.2		1.2					326		1			2.4									G2 DI w/ SGD (On Grade)	71.00′ Rt "C" 157+50.00			p
	q							35.1																						14"x23" OVAL RCP w/ Conc Bkf	71.00′ Rt "C" 159+00.00 TO 71.00′ Rt "C" 157+50.00			q
	r								1.1		1.2					326		1			2.3									G2 DI w/ SGD (On Grade)	71.00′ Rt "C" 159+00.00			r
SHEET TOTAL								168.5	16.1		10.7					3586		11												SHEET TOTAL				

DRAINAGE QUANTITIES DQ-32

STATE OF CALIFORNIA - DEPARTMENT OF TRANSPORTATION
Caltrans

CONSULTANT FUNCTIONAL SUPERVISOR: HAN-BIN LIANG

CALCULATED-DESIGNED BY: ANALETTE OCHOA
CHECKED BY: CLAIRE COUGHLAN

REVISED BY / DATE REVISED: CC 06/02/10; CC 12/16/10; CC 05/12/11

LAST REVISION 05-12-11
DATE PLOTTED => 15-JUL-2011
TIME PLOTTED => 11:07

FOR NOTES AND ABBREVIATIONS, SEE SHEET DQ-1

Dist	COUNTY	ROUTE	POST MILES TOTAL PROJECT	SHEET No.	TOTAL SHEETS
04	SCI	101	48.7/52.0	315	993

REGISTERED CIVIL ENGINEER — DATE: 05-13-11

PLANS APPROVAL DATE: 7-11-11

REGISTERED PROFESSIONAL ENGINEER — ANALETTE OCHOA — No. C 55279 — Exp. 12/31/12 — CIVIL — STATE OF CALIFORNIA

THE STATE OF CALIFORNIA OR ITS OFFICERS OR AGENTS SHALL NOT BE RESPONSIBLE FOR THE ACCURACY OR COMPLETENESS OF SCANNED COPIES OF THIS PLAN SHEET.

WRECO
1243 ALPINE ROAD
SUITE 108
WALNUT CREEK, CA 94596

SANTA CLARA VALLEY TRANSPORTATION AUTHORITY
3331 N FIRST STREET
SAN JOSE, CA 95134

DRAINAGE QUANTITIES

DRAINAGE SYSTEM No. ⬡	DRAINAGE UNIT ◯	REMOVE CULVERT (LF)	REMOVE INLET (EA)	REMOVE MH (EA)	REMOVE HEADWALL (EA)	REMOVE FES (EA)	REMOVE AUTOMATIC DRAINAGE GATE (EA)	REMOVE CONCRETE (MISCELLANEOUS) (CY)	CAP INLET (EA)	ADJUST INLET (EA)	18" ASP (LF)	12" ALTERNATIVE PIPE CULVERT (LF)	ALTERNATIVE PIPE CULVERT (TYPE A) 18" (LF)	ALTERNATIVE PIPE CULVERT (TYPE A) 24" (LF)	ALTERNATIVE PIPE CULVERT (TYPE A) 36" (LF)	ALTERNATIVE PIPE CULVERT (TYPE B) 18" (LF)	ALTERNATIVE PIPE CULVERT (TYPE B) 24" (LF)	ALTERNATIVE PIPE CULVERT (TYPE B) 30" (LF)	ALTERNATIVE PIPE CULVERT (TYPE B) 36" (LF)	ALTERNATIVE PIPE CULVERT (TYPE B) 42" (LF)	ALTERNATIVE PIPE CULVERT (TYPE B) 54" (LF)	14" x 23" OVAL RCP (CLASS III) (LF)	19" x 30" OVAL RCP (CLASS III) (LF)	18" CSP (LF)	18" AFES (EA)	24" AFES (EA)	30" AFES (EA)	36" AFES (EA)	24" TEE (N) (EA)	PIPE JOINT CLASSIFICATION (N)	MAXIMUM COVER (N) (LF)	DESCRIPTION	STATION	DRAINAGE PLAN No.	DRAINAGE SYSTEM No. ⬡	DRAINAGE UNIT ◯
27	a																																G2 DI w/ SGD (In Grade Sag)	83.00′ Lt "C" 152+88.62	D-11	27	a
	b																					48									S	1.5	14"x23" OVAL RCP w/ Conc Bkf	83.00′ Lt "C" 152+88.62 TO 20.97′ Lt "ANN" 153+40.00			b
	c																																G2 DI	20.97′ Lt "ANN" 153+40.00			c
	d															257															S	2.2	18" APC (B) w/ Conc Bkf	20.97′ Lt "ANN" 153+40.00 TO 20.36′ Lt "ANN" 156+00.00			d
	e																																G2 DI	20.36′ Lt "ANN" 156+00.00			e
	f															147															S	2.5	18" APC (B)	20.36′ Lt "ANN" 156+00.00 TO 26.69′ Lt "ANN" 157+50.00			f
	g																																G2 DI	26.69′ Lt "ANN" 157+50.00			g
	h															147															S	2.5	18" APC (B) w/ Conc Bkf	26.69′ Lt "ANN" 157+50.00 TO 37.14′ Lt "ANN" 159+00.00			h
	i																																G2 DI	37.14′ Lt "ANN" 159+00.00			i
	j															33															S	1.6	18" APC (B)	37.14′ Lt "ANN" 159+00.00 TO 50.78′ Lt "ANN" 159+39.08			j
	k																								1								18" AFES	50.78′ Lt "ANN" 159+39.08			k
	l												28																		S	2.5	18" APC (A)	26.69′ Lt "ANN" 157+50.00 TO 68.94′ Lt "C" 157+50.00			l
	m																																G2 DI w/ SGD (On Grade)	68.94′ Lt "C" 157+50.00			m
	n												54																		S	2.2	18" APC (A) w/ Conc Bkf (FSC)	71.00′ Lt "C" 159+00.00 TO 37.14′ Lt "ANN" 159+00.00			n
	o																																G2 DI w/ SGD (On Grade)	71.00′ Lt "C" 159+00.00			o
28	a																																G2 DI w/ PCC APRON	80.05′ Lt "C" 159+76.75	D-11	28	a
29	a																																RSP (BACKING No. 2, METHOD B)	46.60′ Lt "ANN" 159+48.04	D-11	29	a
	b																								1								18" AFES	46.60′ Lt "ANN" 159+48.04			b
	c																								1								18" AFES	47.31′ Lt "ANN" 159+53.69			c
	d															87															S	2.1	18" APC (B) w/ Conc Bkf (FSC)	80.05′ Lt "C" 159+76.75 TO 46.60′ Lt "ANN" 159+48.04			d
	e															87															S	2.1	18" APC (B) w/ Conc Bkf (FSC)	80.05′ Lt "C" 159+76.75 TO 47.31′ Lt "ANN" 159+53.69			e
	f				1																												REMOVE HW	23.59′ Lt "ANN" 159+54.97			f
	g	65																															REMOVE Culv	23.59′ Lt "ANN" 159+54.97 TO 80.05′ Lt "C" 159+76.75			g
	h		1																														REMOVE DI	80.05′ Lt "C" 159+76.75			h
30	a												21																		S	1.5	18" APC (A)	60.26′ Lt "ANF" 161+45.53 TO 38.64′ Lt "ANF" 161+38.60	D-12	30	a
	b																								1								18" AFES	60.26′ Lt "ANF" 161+45.53			b
	c																																RSP (BACKING No. 2, METHOD B)	60.26′ Lt "ANF" 161+45.53			c
	d																																UNLINED V-DITCH	55.33′ Lt "ANF" 166+80.00 TO 69.52′ Lt "ANF" 161+40.00			d
SHEET TOTAL		65	1		1								103			758						48			4								SHEET TOTAL				

DRAINAGE QUANTITIES DQ-33

REVISED BY	DATE REVISED
CC	05/12/11
CC	12/16/10
CC	06/02/10

CALCULATED-DESIGNED BY: CLAIRE COUGHLAN
CHECKED BY: ANALETTE OCHOA
CONSULTANT FUNCTIONAL SUPERVISOR: HAN-BIN LIANG

STATE OF CALIFORNIA - DEPARTMENT OF TRANSPORTATION
Caltrans

LAST REVISION 05-12-11
DATE PLOTTED => 15-JUL-2011
TIME PLOTTED => 12:44

FOR NOTES AND ABBREVIATIONS, SEE SHEET DQ-1

Dist	COUNTY	ROUTE	POST MILES TOTAL PROJECT	SHEET No.	TOTAL SHEETS
04	SCI	101	48.7/52.0	316	993

REGISTERED CIVIL ENGINEER 05-13-11 DATE

7-11-11
PLANS APPROVAL DATE

REGISTERED PROFESSIONAL ENGINEER ANALETTE OCHOA No. C 55279 Exp. 12/31/12 CIVIL STATE OF CALIFORNIA

THE STATE OF CALIFORNIA OR ITS OFFICERS OR AGENTS SHALL NOT BE RESPONSIBLE FOR THE ACCURACY OR COMPLETENESS OF SCANNED COPIES OF THIS PLAN SHEET.

WRECO
1243 ALPINE ROAD
SUITE 108
WALNUT CREEK, CA 94596

SANTA CLARA VALLEY TRANSPORTATION AUTHORITY
3331 N FIRST STREET
SAN JOSE, CA 95134

DRAINAGE QUANTITIES

DRAINAGE SYSTEM No.	DRAINAGE UNIT	ROCK SLOPE PROTECTION: BACKING No. 1, METHOD B (CY)	ROCK SLOPE PROTECTION: BACKING No 2, METHOD B (CY)	ROCK SLOPE PROTECTION: LIGHT, METHOD B (CY)	ROCK SLOPE PROTECTION: FABRIC (SQYD)	STRUCTURAL CONCRETE (HEADWALL) (CY)	CONCRETE BACKFILL (FAST SETTING CONCRETE) (CY)	MINOR CONCRETE: BACKFILL (CY)	MINOR CONCRETE: MINOR STRUCTURE (CY)	MINOR CONCRETE: DITCH LINING (CY)	MINOR CONCRETE: GUTTER DEPRESSION (CY)	PLACE HMA (Misc AREA) (SQYD)	MINOR HOT MIX ASPHALT (TON)	DITCH EXCAVATION (CY)	BAR REINFORCING STEEL (HEADWALL) (LB)	Misc IRON AND STEEL (LB)	WELDED WIRE FABRIC (6" x 6", W1.4 x W1.4)(N) (SQYD)	INLET FRAME AND GRATE (N): TYPE 24-12 (EA)	INLET FRAME AND GRATE (N): TYPE 18-9 (EA)	MH COVER (TYPE U45) (N) (EA)	HEIGHT OF INLET/MH (N) (LF)	CONCRETE COLLAR (N) (EA)	IMPORTED BIOFILTRATION SOIL (CY)	CLASS 1 PERMEABLE MATERIAL (CY)	ABANDON CULVERT (EA)	36" AUTOMATIC DRAINAGE GATE (EA)	42" AUTOMATIC DRAINAGE GATE (EA)	18" STEEL FLARED END SECTION (EA)	14"x23" OVAL SHAPED CONCRETE FLARED END SECTION (EA)	19"x30" OVAL SHAPED CONCRETE FLARED END SECTION (EA)	DESCRIPTION	STATION	DRAINAGE PLAN No.	DRAINAGE SYSTEM No.	DRAINAGE UNIT
27	a								1.1		1.5					326		1			2.3										G2 DI w/ SGD (In Grade Sag)	83.00′ Lt "C" 152+88.62	D-11	27	a
	b							11.4																							14"x23" OVAL RCP w/ Conc Bkf	83.00′ Lt "C" 152+88.62 TO 20.97′ Lt "ANN" 153+40.00			b
	c								1.2							326		1			2.7										G2 DI	20.97′ Lt "ANN" 153+40.00			c
	d							65.7																							18" APC (B) w/ Conc Bkf	20.97′ Lt "ANN" 153+40.00 TO 20.36′ Lt "ANN" 156+00.00			d
	e								1.5							326		1			3.7										G2 DI	20.36′ Lt "ANN" 156+00.00			e
	f																														18" APC (B)	20.36′ Lt "ANN" 156+00.00 TO 26.69′ Lt "ANN" 157+50.00			f
	g								1.6							326		1			4.0										G2 DI	26.69′ Lt "ANN" 157+50.00			g
	h																														18" APC (B) w/ Conc Bkf	26.69′ Lt "ANN" 157+50.00 TO 37.14′ Lt "ANN" 159+00.00			h
	i								1.3							326		1			3.1										G2 DI	37.14′ Lt "ANN" 159+00.00			i
	j																														18" APC (B)	37.14′ Lt "ANN" 159+00.00 TO 50.78′ Lt "ANN" 159+39.08			j
	k																														18" AFES	50.78′ Lt "ANN" 159+39.08			k
	l																														18" APC (A)	26.69′ Lt "ANN" 157+50.00 TO 68.94′ Lt "C" 157+50.00			l
	m								1.6		1.2					326		1			4.0										G2 DI w/ SGD (On Grade)	68.94′ Lt "C" 157+50.00			m
	n						13.8																								18" APC (A) w/ Conc Bkf (FSC)	71.00′ Lt "C" 159+00.00 TO 37.14′ Lt "ANN" 159+00.00			n
	o								1.5		1.2					326		1			3.7										G2 DI w/ SGD (On Grade)	71.00′ Lt "C" 159+00.00			o
28	a								1.5		0.4					326	4.2	1			3.6										G2 DI w/ PCC APRON	80.05′ Lt "C" 159+76.75	D-11	28	a
29	a		27.4		52.0																										RSP (BACKING No. 2, METHOD B)	46.60′ Lt "ANN" 159+48.04	D-11	29	a
	b																														18" AFES	46.60′ Lt "ANN" 159+48.04			b
	c																														18" AFES	47.31′ Lt "ANN" 159+53.69			c
	d						22.2																								18" APC (B) w/ Conc Bkf (FSC)	80.05′ Lt "C" 159+76.75 TO 46.60′ Lt "ANN" 159+48.04			d
	e						22.2																								18" APC (B) w/ Conc Bkf (FSC)	80.05′ Lt "C" 159+76.75 TO 47.31′ Lt "ANN" 159+53.69			e
	f																														REMOVE HW	23.59′ Lt "ANN" 159+54.97			f
	g																														REMOVE Culv	23.59′ Lt "ANN" 159+54.97 TO 80.05′ Lt "C" 159+76.75			g
	h																														REMOVE DI	80.05′ Lt "C" 159+76.75			h
30	a																														18" APC (A)	60.26′ Lt "ANF" 161+45.53 TO 38.64′ Lt "ANF" 161+38.60	D-12	30	a
	b																														18" AFES	60.26′ Lt "ANF" 161+45.53			b
	c		3.9		16.0																										RSP (BACKING No. 2, METHOD B)	60.26′ Lt "ANF" 161+45.53			c
	d													40.0																	UNLINED V-DITCH	55.33′ Lt "ANF" 166+80.00 TO 69.52′ Lt "ANF" 161+40.00			d
SHEET TOTAL			31.3		68.0		58.2	77.1	11.3		4.2			40.0		2608	4.2	8													SHEET TOTAL				

DRAINAGE QUANTITIES DQ-34

CC	05/12/11	CLAIRE COUGHLAN	ANALETTE OCHOA
CC	12/16/10	CALCULATED-DESIGNED BY	CHECKED BY
CC	06/02/10	CONSULTANT FUNCTIONAL SUPERVISOR	HAN-BIN LIANG
REVISED BY	DATE REVISED		

STATE OF CALIFORNIA - DEPARTMENT OF TRANSPORTATION

Caltrans

LAST REVISION 05-12-11 | DATE PLOTTED => 15-JUL-2011 | TIME PLOTTED => 12:44

FOR NOTES AND ABBREVIATIONS, SEE SHEET DQ-1

Dist	COUNTY	ROUTE	POST MILES TOTAL PROJECT	SHEET No.	TOTAL SHEETS
04	SCI	101	48.7/52.0	317	993

REGISTERED CIVIL ENGINEER 05-13-11 DATE

7-11-11
PLANS APPROVAL DATE

REGISTERED PROFESSIONAL ENGINEER ANALETTE OCHOA No. C 55279 Exp. 12/31/12 CIVIL STATE OF CALIFORNIA

THE STATE OF CALIFORNIA OR ITS OFFICERS OR AGENTS SHALL NOT BE RESPONSIBLE FOR THE ACCURACY OR COMPLETENESS OF SCANNED COPIES OF THIS PLAN SHEET.

WRECO
1243 ALPINE ROAD
SUITE 108
WALNUT CREEK, CA 94596

SANTA CLARA VALLEY TRANSPORTATION AUTHORITY
3331 N FIRST STREET
SAN JOSE, CA 95134

DRAINAGE QUANTITIES

DRAINAGE SYSTEM No.	DRAINAGE UNIT	REMOVE CULVERT (LF)	REMOVE INLET (EA)	REMOVE MH (EA)	REMOVE HEADWALL (EA)	REMOVE FES (EA)	REMOVE AUTOMATIC DRAINAGE GATE (EA)	REMOVE CONCRETE (MISCELLANEOUS) (CY)	CAP INLET (EA)	ADJUST INLET (EA)	18" ASP (LF)	12" ALTERNATIVE PIPE CULVERT (LF)	ALTERNATIVE PIPE CULVERT (TYPE A) (LF) 18"	24"	36"	ALTERNATIVE PIPE CULVERT (TYPE B) (LF) 18"	24"	30"	36"	42"	54"	14" x 23" OVAL RCP (CLASS III) (LF)	19" x 30" OVAL RCP (CLASS III) (LF)	18" CSP (LF)	18" AFES (EA)	24" AFES (EA)	30" AFES (EA)	36" AFES (EA)	24" TEE (N) (EA)	PIPE JOINT CLASSIFICATION (N)	MAXIMUM COVER (N) (LF)	DESCRIPTION	STATION	DRAINAGE PLAN No.	DRAINAGE SYSTEM No.	DRAINAGE UNIT
31	a																															RSP (BACKING No. 2, METHOD B)	60.58′ Lt "ANF" 162+00.69	D-12	31	a
	b																								1							18" AFES	60.58′ Lt "ANF" 162+00.69			b
	c												66																	S	2.2	18" APC (A)	7.22′ Rt "ANF" 162+00.08 TO 60.58′ Lt "ANF" 162+00.69			c
	d																															G2 DI w/ PCC APRON	7.22′ Rt "ANF" 162+00.08			d
	e												154																	S	2.2	18" APC (A)	9.24′ Rt "ANF" 163+57.29 TO 7.22′ Rt "ANF" 162+00.08			e
	f																															G2 MH	9.24′ Rt "ANF" 163+57.29			f
	g				1																											REMOVE HW	9.24′ Rt "ANF" 163+57.29			g
32	a																															RSP (BACKING No. 2, METHOD B)	113.81′ Lt "C" 163+42.06	D-12	32	a
	b																								1							18" AFES	113.81′ Lt "C" 163+42.06			b
	c															69														S	1.7	18" APC (B)	113.81′ Lt "C" 163+42.06 TO 80.25′ Lt "C" 163+50.00			c
	d																															G2 DI	80.25′ Lt "C" 163+50.00			d
	e															47														S	1.6	18" APC (B) w/ Conc Bkf	80.25′ Lt "C" 163+50.00 TO 78.87′ Lt "C" 164+00.00			e
	f																															G2 DI w/ SGD (In Grade Sag)	78.87′ Lt "C" 164+00.00			f
	g															47														S	1.3	18" APC (B) w/ Conc Bkf	78.87′ Lt "C" 164+00.00 TO 78.00′ Lt "C" 164+50.00			g
	h																															G2 DI w/ SGD (On Grade)	78.00′ Lt "C" 164+50.00			h
	i															147														S	1.2	18" APC (B) w/ Conc Bkf	78.00′ Lt "C" 164+50.00 TO 78.00′ Lt "C" 166+00.00			i
	j																															G2 DI w/ SGD (On Grade)	78.00′ Lt "C" 166+00.00			j
	k			1																												REMOVE MH	33.72′ Lt "ANF" 165+01.25			k
	l	22																														REMOVE Culv	9.73′ Lt "ANF" 165+02.81 TO 33.72′ Lt "ANF" 165+01.25			l
	m					1																										REMOVE FES	9.73′ Lt "ANF" 165+02.81			m
	n	176																														REMOVE Culv	33.72′ Lt "ANF" 165+01.25 TO 8.16′ Lt "ANF" 166+96.55			n
	o			1																												REMOVE MH	8.16′ Lt "ANF" 166+96.55			o
	p	35																														REMOVE Culv	8.16′ Lt "ANF" 166+96.55 TO 43.18′ Lt "ANF" 167+11.98			p
	q		1																													REMOVE DI	43.18′ Lt "ANF" 167+11.98			q
	r	42																														REMOVE Culv	43.18′ Lt "ANF" 167+11.98 TO 33.69′ Lt "ANF" 167+58.30			r
	s					1																										REMOVE FES	33.69′ Lt "ANF" 167+58.30			s
SHEET TOTAL		275	1	2	1	2							220			310									2							SHEET TOTAL				

DRAINAGE QUANTITIES DQ-35

REVISED BY	DATE REVISED
CC	05/12/11
CC	12/16/10
CC	06/02/10

CALCULATED-DESIGNED BY: CLAIRE COUGHLAN
CHECKED BY: ANALETTE OCHOA
CONSULTANT FUNCTIONAL SUPERVISOR: HAN-BIN LIANG

STATE OF CALIFORNIA - DEPARTMENT OF TRANSPORTATION
Caltrans

LAST REVISION 05-12-11
DATE PLOTTED => 15-JUL-2011
TIME PLOTTED => 12:44

FOR NOTES AND ABBREVIATIONS, SEE SHEET DQ-1

Dist	COUNTY	ROUTE	POST MILES TOTAL PROJECT	SHEET No.	TOTAL SHEETS
04	SCI	101	48.7/52.0	318	993

REGISTERED CIVIL ENGINEER 05-13-11 DATE

7-11-11
PLANS APPROVAL DATE

REGISTERED PROFESSIONAL ENGINEER ANALETTE OCHOA No. C 55279 Exp. 12/31/12 CIVIL STATE OF CALIFORNIA

THE STATE OF CALIFORNIA OR ITS OFFICERS OR AGENTS SHALL NOT BE RESPONSIBLE FOR THE ACCURACY OR COMPLETENESS OF SCANNED COPIES OF THIS PLAN SHEET.

WRECO
1243 ALPINE ROAD
SUITE 108
WALNUT CREEK, CA 94596

SANTA CLARA VALLEY TRANSPORTATION AUTHORITY
3331 N FIRST STREET
SAN JOSE, CA 95134

DRAINAGE QUANTITIES

DRAINAGE SYSTEM No.	DRAINAGE UNIT	ROCK SLOPE PROTECTION: BACKING No. 1, METHOD B (CY)	ROCK SLOPE PROTECTION: BACKING No 2, METHOD B (CY)	ROCK SLOPE PROTECTION: LIGHT, METHOD B (CY)	ROCK SLOPE PROTECTION: FABRIC (SQYD)	STRUCTURAL CONCRETE (HEADWALL) (CY)	CONCRETE BACKFILL (FAST SETTING CONCRETE) (CY)	MINOR CONCRETE: BACKFILL (CY)	MINOR CONCRETE: MINOR STRUCTURE (CY)	MINOR CONCRETE: DITCH LINING (CY)	MINOR CONCRETE: GUTTER DEPRESSION (CY)	PLACE HMA (Misc AREA) (SQYD)	MINOR HOT MIX ASPHALT (TON)	DITCH EXCAVATION (CY)	BAR REINFORCING STEEL (HEADWALL) (LB)	Misc IRON AND STEEL (LB)	WELDED WIRE FABRIC (6" x 6", W1.4 x W1.4)(N) (SQYD)	INLET FRAME AND GRATE (N): TYPE 24-12 (EA)	INLET FRAME AND GRATE (N): TYPE 18-9 (EA)	MH COVER (TYPE U45) (N) (EA)	HEIGHT OF INLET/MH (N) (LF)	CONCRETE COLLAR (N) (EA)	IMPORTED BIOFILTRATION SOIL (CY)	CLASS 1 PERMEABLE MATERIAL (CY)	ABANDON CULVERT (EA)	36" AUTOMATIC DRAINAGE GATE (EA)	42" AUTOMATIC DRAINAGE GATE (EA)	18" STEEL FLARED END SECTION (EA)	14"x23" OVAL SHAPED CONCRETE FLARED END SECTION (EA)	19"x30" OVAL SHAPED CONCRETE FLARED END SECTION (EA)	DESCRIPTION	STATION	DRAINAGE PLAN No.	DRAINAGE SYSTEM No.	DRAINAGE UNIT
31	a		3.5		14.0																									RSP (BACKING No. 2, METHOD B)	60.58′ Lt "ANF" 162+00.69	D-12	31	a
	b																													18" AFES	60.58′ Lt "ANF" 162+00.69			b
	c																													18" APC (A)	7.22′ Rt "ANF" 162+00.08 TO 60.58′ Lt "ANF" 162+00.69			c
	d								1.5		0.4					326	4.2	1			3.7									G2 DI w/ PCC APRON	7.22′ Rt "ANF" 162+00.08			d
	e																													18" APC (A)	9.24′ Rt "ANF" 163+57.29 TO 7.22′ Rt "ANF" 162+00.08			e
	f								1.5							435				1	3.6									G2 MH	9.24′ Rt "ANF" 163+57.29			f
	g																													REMOVE HW	9.24′ Rt "ANF" 163+57.29			g
32	a		3.5		14.0																									RSP (BACKING No. 2, METHOD B)	113.81′ Lt "C" 163+42.06	D-12	32	a
	b																													18" AFES	113.81′ Lt "C" 163+42.06			b
	c																													18" APC (B)	113.81′ Lt "C" 163+42.06 TO 80.25′ Lt "C" 163+50.00			c
	d								1.4							326		1			3.2									G2 DI	80.25′ Lt "C" 163+50.00			d
	e							12.0																						18" APC (B) w/ Conc Bkf	80.25′ Lt "C" 163+50.00 TO 78.87′ Lt "C" 164+00.00			e
	f								1.3		1.5					326		1			2.8									G2 DI w/ SGD (In Grade Sag)	78.87′ Lt "C" 164+00.00			f
	g							12.0																						18" APC (B) w/ Conc Bkf	78.87′ Lt "C" 164+00.00 TO 78.00′ Lt "C" 164+50.00			g
	h								1.2		1.2					326		1			2.7									G2 DI w/ SGD (On Grade)	78.00′ Lt "C" 164+50.00			h
	i							37.6																						18" APC (B) w/ Conc Bkf	78.00′ Lt "C" 164+50.00 TO 78.00′ Lt "C" 166+00.00			i
	j								1.2		1.2					326		1			2.7									G2 DI w/ SGD (On Grade)	78.00′ Lt "C" 166+00.00			j
	k																													REMOVE MH	33.72′ Lt "ANF" 165+01.25			k
	l																													REMOVE Culv	9.73′ Lt "ANF" 165+02.81 TO 33.72′ Lt "ANF" 165+01.25			l
	m																													REMOVE FES	9.73′ Lt "ANF" 165+02.81			m
	n																													REMOVE Culv	33.72′ Lt "ANF" 165+01.25 TO 8.16′ Lt "ANF" 166+96.55			n
	o																													REMOVE MH	8.16′ Lt "ANF" 166+96.55			o
	p																													REMOVE Culv	8.16′ Lt "ANF" 166+96.55 TO 43.18′ Lt "ANF" 167+11.98			p
	q																													REMOVE DI	43.18′ Lt "ANF" 167+11.98			q
	r																													REMOVE Culv	43.18′ Lt "ANF" 167+11.98 TO 33.69′ Lt "ANF" 167+58.30			r
	s																													REMOVE FES	33.69′ Lt "ANF" 167+58.30			s
SHEET TOTAL			7.0		28.0			61.6	8.0		4.2					2065	4.2	5		1										SHEET TOTAL				

DRAINAGE QUANTITIES DQ-36

REVISED BY	DATE REVISED
CC	05/12/11
CC	12/16/10
CC	06/02/10

CALCULATED-DESIGNED BY: CLAIRE COUGHLAN
CHECKED BY: ANALETTE OCHOA
CONSULTANT FUNCTIONAL SUPERVISOR: HAN-BIN LIANG

STATE OF CALIFORNIA - DEPARTMENT OF TRANSPORTATION
Caltrans

LAST REVISION 05-12-11
DATE PLOTTED => 15-JUL-2011
TIME PLOTTED => 12:44

FOR NOTES AND ABBREVIATIONS, SEE SHEET DQ-1

Dist	COUNTY	ROUTE	POST MILES TOTAL PROJECT	SHEET No.	TOTAL SHEETS
04	SCI	101	48.7/52.0	319	993

REGISTERED CIVIL ENGINEER 05-13-11 DATE

7-11-11
PLANS APPROVAL DATE

REGISTERED PROFESSIONAL ENGINEER ANALETTE OCHOA No. C 55279 Exp. 12/31/12 CIVIL STATE OF CALIFORNIA

THE STATE OF CALIFORNIA OR ITS OFFICERS OR AGENTS SHALL NOT BE RESPONSIBLE FOR THE ACCURACY OR COMPLETENESS OF SCANNED COPIES OF THIS PLAN SHEET.

WRECO
1243 ALPINE ROAD
SUITE 108
WALNUT CREEK, CA 94596

SANTA CLARA VALLEY
TRANSPORTATION AUTHORITY
3331 N FIRST STREET
SAN JOSE, CA 95134

DRAINAGE QUANTITIES

DRAINAGE SYSTEM No.	DRAINAGE UNIT	REMOVE CULVERT (LF)	REMOVE INLET (EA)	REMOVE MH (EA)	REMOVE HEADWALL (EA)	REMOVE FES (EA)	REMOVE AUTOMATIC DRAINAGE GATE (EA)	REMOVE CONCRETE (MISCELLANEOUS) (CY)	CAP INLET (EA)	ADJUST INLET (EA)	18" ASP (LF)	12" ALTERNATIVE PIPE CULVERT (LF)	ALTERNATIVE PIPE CULVERT (TYPE A) (LF) 18"	24"	36"	ALTERNATIVE PIPE CULVERT (TYPE B) (LF) 18"	24"	30"	36"	42"	54"	14" x 23" OVAL RCP (CLASS III) (LF)	19" x 30" OVAL RCP (CLASS III) (LF)	18" CSP (LF)	18" AFES (EA)	24" AFES (EA)	30" AFES (EA)	36" AFES (EA)	24" TEE (N) (EA)	PIPE JOINT CLASSIFICATION (N)	MAXIMUM COVER (N) (LF)	DESCRIPTION	STATION	DRAINAGE PLAN No.	DRAINAGE SYSTEM No.	DRAINAGE UNIT
33	a																															BIOFILTRATION SWALE	49.67′ Lt "ANF" 165+10.00 TO 44.02′ Lt "ANF" 166+90.00	D-12	33	a
	b																															ROCK BERM IN BIOFILTRATION SWALE	47.26′ Lt "ANF" 166+30.00			b
	c																															ROCK BERM IN BIOFILTRATION SWALE	48.83′ Lt "ANF" 165+70.00			c
	d																															RSP (BACKING No. 2, METHOD B)	45.77′ Lt "ANF" 165+10.52			d
	e																								1							18" AFES	45.77′ Lt "ANF" 165+10.52			e
	f															13														S	2.7	18" APC (B)	33.72′ Lt "ANF" 165+01.25 TO 45.77′ Lt "ANF" 165+10.52			f
	g																															G2 DI	33.72′ Lt "ANF" 165+01.25			g
	h															11														S	3.1	18" APC (B)	21.00′ Lt "ANF" 165+00.00 TO 33.72′ Lt "ANF" 165+01.25			h
	i																															G2 DI	21.00′ Lt "ANF" 165+00.00			i
	j															87														S	3.1	18" APC (B) w/ Conc Bkf	21.00′ Lt "ANF" 165+90.00 TO 21.00′ Lt "ANF" 165+00.00			j
	k																															G1 DI	21.00′ Lt "ANF" 165+90.00			k
	l												37																	P	0.7	18" APC (A) w/ Conc Bkf (FSC)	18.10′ Rt "ANF" 165+90.00 TO 21.00′ Lt "ANF" 165+90.00			l
	m																								1							18" AFES	18.10′ Rt "ANF" 165+90.00			m
	n																															RSP (BACKING No. 2, METHOD B)	18.10′ Rt "ANF" 165+90.00			n
34	a																															HMA OVERSIDE DRAIN	21.00′ Lt "ANF" 166+90.00	D-12	34	a
	b																															RSP (LIGHT, METHOD B)	40.47′ Lt "ANF" 166+97.60			b
	c																															UNLINED TRAPEZOIDAL DITCH	44.03′ Lt "ANF" 166+95.00 TO 32.00′ Lt "ANF" 167+45.00			c
	d																															RSP (LIGHT, METHOD B)	28.29′ Lt "ANF" 167+50.00			d
	e																															HMA OVERSIDE DRAIN	21.00′ Lt "ANF" 167+50.00			e
35	a																															19"x30" Conc FES	31.12′ Lt "ANF" 167+57.95	D-12	35	a
	b																						131							S	1.2	19"x30" OVAL RCP w/ Conc Bkf	31.12′ Lt "ANF" 167+57.95 TO 20.00′ Lt "ANF" 168+90.00			b
	c																															GDO DI	20.00′ Lt "ANF" 168+90.00			c
	d																						407							S	1.8	19"x30" OVAL RCP w/ Conc Bkf	90.06′ Lt "C" 173+00.00 TO 20.00′ Lt "ANF" 168+90.00			d
	e																															GT4 DI	90.06′ Lt "C" 173+00.00	D-14		e
	f															197														S	2.1	18" APC (B) w/ Conc Bkf	83.71′ Lt "C" 175+00.00 TO 90.06′ Lt "C" 173+00.00			f
	g																															GT4 DI	83.71′ Lt "C" 175+00.00			g
	h															447														S	2.1	18" APC (B) w/ Conc Bkf	83.00′ Lt "C" 179+50.00 TO 83.71′ Lt "C" 175+00.00			h
	i																															GT4 DI	83.00′ Lt "C" 179+50.00			i
	j															447														S	2.2	18" APC (B) w/ Conc Bkf	83.00′ Lt "C" 184+00.00 TO 83.00′ Lt "C" 179+50.00			j
	k																															GT4 DI	83.00′ Lt "C" 184+00.00			k
	l												147																	S	2.3	18" APC (A) w/ Conc Bkf	83.00′ Lt "C" 184+00.00 TO 83.00′ Lt "CSN" 185+50.00			l
	m																															G2 DI w/ SGD (On Grade)	83.00′ Lt "CSN" 185+50.00			m
SHEET TOTAL													184			1202							538		2							SHEET TOTAL				

DRAINAGE QUANTITIES DQ-37

REVISED BY	DATE REVISED
CC	05/12/11
CC	12/16/10
CC	06/02/10

CALCULATED-DESIGNED BY: CLAIRE COUGHLAN
CHECKED BY: ANALETTE OCHOA
CONSULTANT FUNCTIONAL SUPERVISOR: HAN-BIN LIANG

STATE OF CALIFORNIA - DEPARTMENT OF TRANSPORTATION
Caltrans

LAST REVISION 05-12-11
DATE PLOTTED => 15-JUL-2011
TIME PLOTTED => 12:45

FOR NOTES AND ABBREVIATIONS, SEE SHEET DQ-1

Dist	COUNTY	ROUTE	POST MILES TOTAL PROJECT	SHEET No.	TOTAL SHEETS
04	SCI	101	48.7/52.0	320	993

REGISTERED CIVIL ENGINEER 05-13-11 DATE

7-11-11
PLANS APPROVAL DATE

REGISTERED PROFESSIONAL ENGINEER ANALETTE OCHOA No. C 55279 Exp. 12/31/12 CIVIL STATE OF CALIFORNIA

THE STATE OF CALIFORNIA OR ITS OFFICERS OR AGENTS SHALL NOT BE RESPONSIBLE FOR THE ACCURACY OR COMPLETENESS OF SCANNED COPIES OF THIS PLAN SHEET.

WRECO
1243 ALPINE ROAD
SUITE 108
WALNUT CREEK, CA 94596

SANTA CLARA VALLEY TRANSPORTATION AUTHORITY
3331 N FIRST STREET
SAN JOSE, CA 95134

DRAINAGE QUANTITIES

DRAINAGE SYSTEM No.	DRAINAGE UNIT	ROCK SLOPE PROTECTION: BACKING No. 1, METHOD B (CY)	ROCK SLOPE PROTECTION: BACKING No 2, METHOD B (CY)	ROCK SLOPE PROTECTION: LIGHT, METHOD B (CY)	ROCK SLOPE PROTECTION: FABRIC (SQYD)	STRUCTURAL CONCRETE (HEADWALL) (CY)	CONCRETE BACKFILL (FAST SETTING CONCRETE) (CY)	MINOR CONCRETE: BACKFILL (CY)	MINOR CONCRETE: MINOR STRUCTURE (CY)	MINOR CONCRETE: DITCH LINING (CY)	MINOR CONCRETE: GUTTER DEPRESSION (CY)	PLACE HMA (Misc AREA) (SQYD)	MINOR HOT MIX ASPHALT (TON)	DITCH EXCAVATION (CY)	BAR REINFORCING STEEL (HEADWALL) (LB)	Misc IRON AND STEEL (LB)	WELDED WIRE FABRIC (6" x 6", W1.4 x W1.4)(N) (SQYD)	INLET FRAME AND GRATE (N): TYPE 24-12 (EA)	INLET FRAME AND GRATE (N): TYPE 18-9 (EA)	MH COVER (TYPE U45) (N) (EA)	HEIGHT OF INLET/MH (N) (LF)	CONCRETE COLLAR (N) (EA)	IMPORTED BIOFILTRATION SOIL (CY)	CLASS 1 PERMEABLE MATERIAL (CY)	ABANDON CULVERT (EA)	36" AUTOMATIC DRAINAGE GATE (EA)	42" AUTOMATIC DRAINAGE GATE (EA)	18" STEEL FLARED END SECTION (EA)	14"x23" OVAL SHAPED CONCRETE FLARED END SECTION (EA)	19"x30" OVAL SHAPED CONCRETE FLARED END SECTION (EA)	DESCRIPTION	STATION	DRAINAGE PLAN No.	DRAINAGE SYSTEM No.	DRAINAGE UNIT
33	a													165.9									165.8								BIOFILTRATION SWALE	49.67′ Lt "ANF" 165+10.00 TO 44.02′ Lt "ANF" 166+90.00	D-12	33	a
	b													1.6										0.8							ROCK BERM IN BIOFILTRATION SWALE	47.26′ Lt "ANF" 166+30.00			b
	c													1.6										0.8							ROCK BERM IN BIOFILTRATION SWALE	48.83′ Lt "ANF" 165+70.00			c
	d		6.3		22.0																										RSP (BACKING No. 2, METHOD B)	45.77′ Lt "ANF" 165+10.52			d
	e																														18" AFES	45.77′ Lt "ANF" 165+10.52			e
	f																														18" APC (B)	33.72′ Lt "ANF" 165+01.25 TO 45.77′ Lt "ANF" 165+10.52			f
	g								1.6							326		1			4.2										G2 DI	33.72′ Lt "ANF" 165+01.25			g
	h																														18" APC (B)	21.00′ Lt "ANF" 165+00.00 TO 33.72′ Lt "ANF" 165+01.25			h
	i								1.7							326		1			4.6										G2 DI	21.00′ Lt "ANF" 165+00.00			i
	j							22.2																							18" APC (B) w/ Conc Bkf	21.00′ Lt "ANF" 165+90.00 TO 21.00′ Lt "ANF" 165+00.00			j
	k								0.9							326		1			2.7										G1 DI	21.00′ Lt "ANF" 165+90.00			k
	l						9.5																								18" APC (A) w/ Conc Bkf (FSC)	18.10′ Rt "ANF" 165+90.00 TO 21.00′ Lt "ANF" 165+90.00			l
	m																														18" AFES	18.10′ Rt "ANF" 165+90.00			m
	n		14.2		34.0																										RSP (BACKING No. 2, METHOD B)	18.10′ Rt "ANF" 165+90.00			n
34	a											2.6	0.9																		HMA OVERSIDE DRAIN	21.00′ Lt "ANF" 166+90.00	D-12	34	a
	b			7.8	20.0																										RSP (LIGHT, METHOD B)	40.47′ Lt "ANF" 166+97.60			b
	c													21.4																	UNLINED TRAPEZOIDAL DITCH	44.03′ Lt "ANF" 166+95.00 TO 32.00′ Lt "ANF" 167+45.00			c
	d			20.0	41.0																										RSP (LIGHT, METHOD B)	28.29′ Lt "ANF" 167+50.00			d
	e											2.6	0.9																		HMA OVERSIDE DRAIN	21.00′ Lt "ANF" 167+50.00			e
35	a																													1	19"x30" Conc FES	31.12′ Lt "ANF" 167+57.95	D-12	35	a
	b							39.4																							19"x30" OVAL RCP w/ Conc Bkf	31.12′ Lt "ANF" 167+57.95 TO 20.00′ Lt "ANF" 168+90.00			b
	c								1.6							634		2			2.8										GDO DI	20.00′ Lt "ANF" 168+90.00			c
	d							122.5																							19"x30" OVAL RCP w/ Conc Bkf	90.06′ Lt "C" 173+00.00 TO 20.00′ Lt "ANF" 168+90.00			d
	e								1.9							652		2			3.5										GT4 DI	90.06′ Lt "C" 173+00.00	D-14		e
	f							50.3																							18" APC (B) w/ Conc Bkf	83.71′ Lt "C" 175+00.00 TO 90.06′ Lt "C" 173+00.00			f
	g								2.0							652		2			3.8										GT4 DI	83.71′ Lt "C" 175+00.00			g
	h							114.2																							18" APC (B) w/ Conc Bkf	83.00′ Lt "C" 179+50.00 TO 83.71′ Lt "C" 175+00.00			h
	i								2.0							652		2			3.8										GT4 DI	83.00′ Lt "C" 179+50.00			i
	j																														18" APC (B) w/ Conc Bkf	83.00′ Lt "C" 184+00.00 TO 83.00′ Lt "C" 179+50.00			j
	k								2.1							652		2			3.9										GT4 DI	83.00′ Lt "C" 184+00.00			k
	l							37.6																							18" APC (A) w/ Conc Bkf	83.00′ Lt "C" 184+00.00 TO 83.00′ Lt "CSN" 185+50.00			l
	m								1.3		1.2					326		1			2.8										G2 DI w/ SGD (On Grade)	83.00′ Lt "CSN" 185+50.00			m
SHEET TOTAL			20.5	27.8	117.0		9.5	386.2	15.1		1.2	5.2	1.8	190.5		4546		14					165.8	1.5						1	SHEET TOTAL				

DRAINAGE QUANTITIES DQ-38

CC	05/12/11	REVISED BY	CLAIRE COUGHLAN
CC	12/16/10	DATE REVISED	ANALETTE OCHOA
CC	06/02/10	CALCULATED-DESIGNED BY	
		CHECKED BY	
		CONSULTANT FUNCTIONAL SUPERVISOR	HAN-BIN LIANG

STATE OF CALIFORNIA - DEPARTMENT OF TRANSPORTATION

Caltrans

LAST REVISION 05-12-11 | DATE PLOTTED => 15-JUL-2011 | TIME PLOTTED => 12:45

FOR NOTES AND ABBREVIATIONS, SEE SHEET DQ-1

Dist	COUNTY	ROUTE	POST MILES TOTAL PROJECT	SHEET No.	TOTAL SHEETS
04	SCI	101	48.7/52.0	321	993

REGISTERED CIVIL ENGINEER 05-13-11 DATE

7-11-11
PLANS APPROVAL DATE

REGISTERED PROFESSIONAL ENGINEER ANALETTE OCHOA No. C 55279 Exp. 12/31/12 CIVIL STATE OF CALIFORNIA

THE STATE OF CALIFORNIA OR ITS OFFICERS OR AGENTS SHALL NOT BE RESPONSIBLE FOR THE ACCURACY OR COMPLETENESS OF SCANNED COPIES OF THIS PLAN SHEET.

WRECO
1243 ALPINE ROAD
SUITE 108
WALNUT CREEK, CA 94596

SANTA CLARA VALLEY
TRANSPORTATION AUTHORITY
3331 N FIRST STREET
SAN JOSE, CA 95134

DRAINAGE QUANTITIES

DRAINAGE SYSTEM No.	DRAINAGE UNIT	REMOVE CULVERT (LF)	REMOVE INLET (EA)	REMOVE MH (EA)	REMOVE HEADWALL (EA)	REMOVE FES (EA)	REMOVE AUTOMATIC DRAINAGE GATE (EA)	REMOVE CONCRETE (MISCELLANEOUS) (CY)	CAP INLET (EA)	ADJUST INLET (EA)	18" ASP (LF)	12" ALTERNATIVE PIPE CULVERT (LF)	ALTERNATIVE PIPE CULVERT (TYPE A) 18" (LF)	ALTERNATIVE PIPE CULVERT (TYPE A) 24" (LF)	ALTERNATIVE PIPE CULVERT (TYPE A) 36" (LF)	ALTERNATIVE PIPE CULVERT (TYPE B) 18" (LF)	ALTERNATIVE PIPE CULVERT (TYPE B) 24" (LF)	ALTERNATIVE PIPE CULVERT (TYPE B) 30" (LF)	ALTERNATIVE PIPE CULVERT (TYPE B) 36" (LF)	ALTERNATIVE PIPE CULVERT (TYPE B) 42" (LF)	ALTERNATIVE PIPE CULVERT (TYPE B) 54" (LF)	14" x 23" OVAL RCP (CLASS III) (LF)	19" x 30" OVAL RCP (CLASS III) (LF)	18" CSP (LF)	18" AFES (EA)	24" AFES (EA)	30" AFES (EA)	36" AFES (EA)	24" TEE (N) (EA)	PIPE JOINT CLASSIFICATION (N)	MAXIMUM COVER (N) (LF)	DESCRIPTION	STATION	DRAINAGE PLAN No.	DRAINAGE SYSTEM No.	DRAINAGE UNIT
36	a				1																												REMOVE HW	75.37′ Rt "C" 160+95.74	D-11	36	a
	b	8																															REMOVE Culv (PORTION)	75.37′ Rt "C" 160+95.74 TO 71.00′ Rt "C" 160+90.88			b
	c																																G2 DI	71.00′ Rt "C" 160+90.88			c
	d																		88												S	1.3	36" APC (B)	71.00′ Rt "C" 160+90.88 TO 20.95′ Lt "CSN" 161+86.57			d
	e																																G1 DI	20.95′ Lt "CSN" 161+86.57	D-13		e
	f				1																												REMOVE HW	85.65′ Rt "C" 161+92.61			f
	g																	56													S	1.5	30" APC (B) w/ Conc Bkf (FSC)	20.95′ Lt "CSN" 161+86.57 TO 25.75′ Rt "CSN" 162+24.42			g
	h	53																															REMOVE Culv	86.37′ Rt "C" 161+90.30 TO 31.28′ Rt "CSN" 162+26.35			h
	i	52																															REMOVE Culv	84.67′ Rt "C" 161+95.50 TO 31.64′ Rt "CSN" 162+28.17			i
	j				1																												REMOVE HW	31.39′ Rt "CSN" 162+29.09			j
	k																	12													S	1.3	30" APC (B)	25.75′ Rt "CSN" 162+24.42 TO 37.39′ Rt "CSN" 162+28.03			k
	l																										1						30" AFES	37.39′ Rt "CSN" 162+28.03			l
	m																																RSP (BACKING No. 2, METHOD B)	37.39′ Rt "CSN" 162+28.03			m
37	a																																G2 DI	25.74′ Rt "CSN" 162+24.42	D-13	37	a
	b															22															S	2.5	18" APC (B)	25.74′ Rt "CSN" 162+24.42 TO 23.39′ Rt "CSN" 162+50.00			b
	c																																G4 DI	23.39′ Rt "CSN" 162+50.00			c
	d															42															S	2.6	18" APC (B)	23.39′ Rt "CSN" 162+50.00 TO 19.76′ Rt "CSN" 163+00.00			d
	e																																G4 DI	19.76′ Rt "CSN" 163+00.00			e
	f																					97									S	2.7	14"x23" OVAL RCP	19.76′ Rt "CSN" 163+00.00 TO 78.00′ Rt "C" 164+00.00			f
	g																																G4 DI	78.00′ Rt "C" 164+00.00			g
	h										147																				S		18" ASP w/ END CAP	78.00′ Rt "C" 164+00.00 TO 77.61′ Rt "C" 165+50.00			h
SHEET TOTAL		113			3						147					64		68	88			97					1						SHEET TOTAL				

DRAINAGE QUANTITIES DQ-39

CC	CC	CC	REVISED BY	CLAIRE COUGHLAN	CALCULATED-DESIGNED BY	CONSULTANT FUNCTIONAL SUPERVISOR	STATE OF CALIFORNIA - DEPARTMENT OF TRANSPORTATION
05/12/11	12/16/10	06/02/10	DATE REVISED	ANALETTE OCHOA	CHECKED BY	HAN-BIN LIANG	Caltrans

LAST REVISION 05-12-11 DATE PLOTTED => 15-JUL-2011 TIME PLOTTED => 12:45

FOR NOTES AND ABBREVIATIONS, SEE SHEET DQ-1

Dist	COUNTY	ROUTE	POST MILES TOTAL PROJECT	SHEET No.	TOTAL SHEETS
04	SCI	101	48.7/52.0	322	993

REGISTERED CIVIL ENGINEER 05-13-11 DATE

7-11-11
PLANS APPROVAL DATE

REGISTERED PROFESSIONAL ENGINEER ANALETTE OCHOA No. C 55279 Exp. 12/31/12 CIVIL STATE OF CALIFORNIA

THE STATE OF CALIFORNIA OR ITS OFFICERS OR AGENTS SHALL NOT BE RESPONSIBLE FOR THE ACCURACY OR COMPLETENESS OF SCANNED COPIES OF THIS PLAN SHEET.

WRECO
1243 ALPINE ROAD
SUITE 108
WALNUT CREEK, CA 94596

SANTA CLARA VALLEY
TRANSPORTATION AUTHORITY
3331 N FIRST STREET
SAN JOSE, CA 95134

DRAINAGE QUANTITIES

DRAINAGE SYSTEM No. ⬡	DRAINAGE UNIT ◯	ROCK SLOPE PROTECTION: BACKING No. 1, METHOD B (CY)	ROCK SLOPE PROTECTION: BACKING No 2, METHOD B (CY)	ROCK SLOPE PROTECTION: LIGHT, METHOD B (CY)	ROCK SLOPE PROTECTION: FABRIC (SQYD)	STRUCTURAL CONCRETE (HEADWALL) (CY)	CONCRETE BACKFILL (FAST SETTING CONCRETE) (CY)	MINOR CONCRETE: BACKFILL (CY)	MINOR CONCRETE: MINOR STRUCTURE (CY)	MINOR CONCRETE: DITCH LINING (CY)	MINOR CONCRETE: GUTTER DEPRESSION (CY)	PLACE HMA (Misc AREA) (SQYD)	MINOR HOT MIX ASPHALT (TON)	DITCH EXCAVATION (CY)	BAR REINFORCING STEEL (HEADWALL) (LB)	Misc IRON AND STEEL (LB)	WELDED WIRE FABRIC (6" x 6", W1.4 x W1.4)(N) (SQYD)	INLET FRAME AND GRATE (N): TYPE 24-12 (EA)	INLET FRAME AND GRATE (N): TYPE 18-9 (EA)	MH COVER (TYPE U45) (N) (EA)	HEIGHT OF INLET/MH (N) (LF)	CONCRETE COLLAR (N) (EA)	IMPORTED BIOFILTRATION SOIL (CY)	CLASS 1 PERMEABLE MATERIAL (CY)	ABANDON CULVERT (EA)	36" AUTOMATIC DRAINAGE GATE (EA)	42" AUTOMATIC DRAINAGE GATE (EA)	18" STEEL FLARED END SECTION (EA)	14"x23" OVAL SHAPED CONCRETE FLARED END SECTION (EA)	19"x30" OVAL SHAPED CONCRETE FLARED END SECTION (EA)	DESCRIPTION	STATION	DRAINAGE PLAN No.	DRAINAGE SYSTEM No. ⬡	DRAINAGE UNIT ◯
36	a																													REMOVE HW	75.37′ Rt "C" 160+95.74	D-11	36	a
	b																													REMOVE Culv (PORTION)	75.37′ Rt "C" 160+95.74 TO 71.00′ Rt "C" 160+90.88			b
	c								1.8							326		1			4.8									G2 DI	71.00′ Rt "C" 160+90.88			c
	d																													36" APC (B)	71.00′ Rt "C" 160+90.88 TO 20.95′ Lt "CSN" 161+86.57			d
	e								1.2							326		1			4.0									G1 DI	20.95′ Lt "CSN" 161+86.57	D-13		e
	f																													REMOVE HW	85.65′ Rt "C" 161+92.61			f
	g						22.1																							30" APC (B) w/ Conc Bkf (FSC)	20.95′ Lt "CSN" 161+86.57 TO 25.75′ Rt "CSN" 162+24.42			g
	h																													REMOVE Culv	86.37′ Rt "C" 161+90.30 TO 31.28′ Rt "CSN" 162+26.35			h
	i																													REMOVE Culv	84.67′ Rt "C" 161+95.50 TO 31.64′ Rt "CSN" 162+28.17			i
	j																													REMOVE HW	31.39′ Rt "CSN" 162+29.09			j
	k																													30" APC (B)	25.75′ Rt "CSN" 162+24.42 TO 37.39′ Rt "CSN" 162+28.03			k
	l																													30" AFES	37.39′ Rt "CSN" 162+28.03			l
	m		14.2		34.0																									RSP (BACKING No. 2, METHOD B)	37.39′ Rt "CSN" 162+28.03			m
37	a								1.5							326		1			3.8									G2 DI	25.74′ Rt "CSN" 162+24.42	D-13	37	a
	b																													18" APC (B)	25.74′ Rt "CSN" 162+24.42 TO 23.39′ Rt "CSN" 162+50.00			b
	c								1.5							249			1		4.0									G4 DI	23.39′ Rt "CSN" 162+50.00			c
	d																													18" APC (B)	23.39′ Rt "CSN" 162+50.00 TO 19.76′ Rt "CSN" 163+00.00			d
	e								1.5							249			1		4.1									G4 DI	19.76′ Rt "CSN" 163+00.00			e
	f																													14"x23" OVAL RCP	19.76′ Rt "CSN" 163+00.00 TO 78.00′ Rt "C" 164+00.00			f
	g								1.4							249			1		3.4									G4 DI	78.00′ Rt "C" 164+00.00			g
	h																													18" ASP w/ END CAP	78.00′ Rt "C" 164+00.00 TO 77.61′ Rt "C" 165+50.00			h
SHEET TOTAL			14.2		34.0		22.1		8.9							1725		3	3											SHEET TOTAL				

DRAINAGE QUANTITIES DQ-40

REVISED BY	DATE REVISED
CC	05/12/11
CC	12/16/10
CC	06/02/10

CLAIRE COUGHLAN — ANALETTE OCHOA — CALCULATED-DESIGNED BY — CHECKED BY

CONSULTANT FUNCTIONAL SUPERVISOR: HAN-BIN LIANG

STATE OF CALIFORNIA - DEPARTMENT OF TRANSPORTATION

Caltrans

LAST REVISION 05-12-11 — DATE PLOTTED => 15-JUL-2011 — TIME PLOTTED => 12:45

FOR NOTES AND ABBREVIATIONS, SEE SHEET DQ-1

Dist	COUNTY	ROUTE	POST MILES TOTAL PROJECT	SHEET No.	TOTAL SHEETS
04	SCI	101	48.7/52.0	323	993

REGISTERED CIVIL ENGINEER 05-13-11 DATE

7-11-11
PLANS APPROVAL DATE

REGISTERED PROFESSIONAL ENGINEER ANALETTE OCHOA No. C 55279 Exp. 12/31/12 CIVIL STATE OF CALIFORNIA

THE STATE OF CALIFORNIA OR ITS OFFICERS OR AGENTS SHALL NOT BE RESPONSIBLE FOR THE ACCURACY OR COMPLETENESS OF SCANNED COPIES OF THIS PLAN SHEET.

WRECO
1243 ALPINE ROAD
SUITE 108
WALNUT CREEK, CA 94596

SANTA CLARA VALLEY TRANSPORTATION AUTHORITY
3331 N FIRST STREET
SAN JOSE, CA 95134

DRAINAGE QUANTITIES

DRAINAGE SYSTEM No.	DRAINAGE UNIT	REMOVE CULVERT (LF)	REMOVE INLET (EA)	REMOVE MH (EA)	REMOVE HEADWALL (EA)	REMOVE FES (EA)	REMOVE AUTOMATIC DRAINAGE GATE (EA)	REMOVE CONCRETE (MISCELLANEOUS) (CY)	CAP INLET (EA)	ADJUST INLET (EA)	18" ASP (LF)	12" ALTERNATIVE PIPE CULVERT (LF)	ALTERNATIVE PIPE CULVERT (TYPE A) 18" (LF)	ALTERNATIVE PIPE CULVERT (TYPE A) 24" (LF)	ALTERNATIVE PIPE CULVERT (TYPE A) 36" (LF)	ALTERNATIVE PIPE CULVERT (TYPE B) 18" (LF)	ALTERNATIVE PIPE CULVERT (TYPE B) 24" (LF)	ALTERNATIVE PIPE CULVERT (TYPE B) 30" (LF)	ALTERNATIVE PIPE CULVERT (TYPE B) 36" (LF)	ALTERNATIVE PIPE CULVERT (TYPE B) 42" (LF)	ALTERNATIVE PIPE CULVERT (TYPE B) 54" (LF)	14" x 23" OVAL RCP (CLASS III) (LF)	19" x 30" OVAL RCP (CLASS III) (LF)	18" CSP (LF)	18" AFES (EA)	24" AFES (EA)	30" AFES (EA)	36" AFES (EA)	24" TEE (N) (EA)	PIPE JOINT CLASSIFICATION (N)	MAXIMUM COVER (N) (LF)	DESCRIPTION	STATION	DRAINAGE PLAN No.	DRAINAGE SYSTEM No.	DRAINAGE UNIT
38	a																																HMA OVERSIDE DRAIN	32.00′ Rt "RSF" 168+00.00	D-13	38	a
	b																																RSP (LIGHT, METHOD B)	38.30′ Rt "RSF" 168+00.00			b
	c																																UNLINED V-DITCH	81.25′ Rt "RSF" 167+11.01 TO 38.30′ Rt "RSF" 168+00.00			c
	d																																RSP (BACKING No. 2, METHOD B)	37.78′ Rt "RSF" 167+56.30			d
	e																								1								18" AFES	40.68′ Rt "RSF" 167+57.02			e
	f																								1								18" AFES	37.87′ Rt "RSF" 167+52.69			f
	g				1																												REMOVE HW	37.78′ Rt "RSF" 167+56.30			g
	h	12																															REMOVE Culv	37.78′ Rt "RSF" 167+56.30 TO 27.05′ Rt "RSF" 167+61.85			h
	i		1																														REMOVE DI	27.05′ Rt "RSF" 167+61.85			i
	j															76														S	2.0	18" APC (B) w/ Conc Bkf (FSC)	26.10′ Lt "RSF" 167+95.89 TO 37.87′ Rt "RSF" 167+52.69			j
	k															76														S	2.0	18" APC (B) w/ Conc Bkf (FSC)	24.06′ Lt "RSF" 167+99.46 TO 40.68′ Rt "RSF" 167+57.02			k
	l	34																															REMOVE Culv	27.05′ Rt "RSF" 167+61.85 TO 5.83′ Lt "RSF" 167+72.02			l
	m				1																												REMOVE HW	5.83′ Lt "RSF" 167+72.02			m
	n																									1							18" AFES	26.10′ Lt "RSF" 167+95.89			n
	o																									1							18" AFES	24.06′ Lt "RSF" 167+99.46			o
	p																																RSP (BACKING No. 2, METHOD B)	18.46′ Lt "RSF" 167+94.58			p
	q																																BIOFILTRATION SWALE	101.04′ Rt "C" 168+00.00 TO 97.80′ Rt "C" 169+00.00			q
39	a							4.9																									REMOVE Conc (MISC)	44.63′ Rt "RSN" 167+99.00 TO 44.17′ Rt "RSN" 166+78.00	D-13	39	a
	b																																LINED V-DITCH	42.60′ Rt "RSN" 166+80.82 TO 42.01′ Rt "RSN" 167+50.00			b
	c							0.1																									REMOVE Conc (MISC)	41.25′ Rt "RSN" 166+81.11			c
	d																																UNLINED V-DITCH	43.45′ Rt "RSN" 166+78.00 TO 42.68′ Rt "RSN" 167+60.00			d
	e	53																															REMOVE Culv	41.25′ Rt "RSN" 166+81.11 TO 38.54′ Rt "RSN" 167+32.29			e
	f		1																														REMOVE DI	38.54′ Rt "RSN" 167+32.29			f
	g																																G4 DI (Mod)	37.94′ Rt "RSN" 167+90.00			g
	h																					34								S	1.5	14"x23" OVAL RCP w/ Conc Bkf	37.94′ Rt "RSN" 167+90.00 TO 37.36′ Rt "RSN" 168+34.84			h
	i	166																															REMOVE Culv	41.25′ Rt "RSN" 166+81.11 TO 31.27′ Rt "RSN" 169+30.14			i
	j																																G4 DI (Mod)	37.36′ Rt "RSN" 168+34.84			j
	k																					115								S	1.2	14"x23" OVAL RCP w/ Conc Bkf (FSC)	28.22′ Lt "RSN" 168+20.00 TO 37.36′ Rt "RSN" 168+34.84			k
	l																																14"x23" Conc FES	30.10′ Rt "RSF" 168+04.69			l
	m					1																											REMOVE FES	37.37′ Rt "RSN" 168+93.54			m
	n					1																											REMOVE FES	32.70′ Rt "RSN" 170+57.05			n
	o	229																															REMOVE Culv	32.70′ Rt "RSN" 170+57.05 TO 33.06′ Rt "RSN" 173+94.93			o
SHEET TOTAL		494	2		2	2		5.0								152						149			4								SHEET TOTAL				

DRAINAGE QUANTITIES DQ-41

STATE OF CALIFORNIA - DEPARTMENT OF TRANSPORTATION
Caltrans

CONSULTANT FUNCTIONAL SUPERVISOR: HAN-BIN LIANG

CALCULATED-DESIGNED BY: CLAIRE COUGHLAN
CHECKED BY: ANALETTE OCHOA

REVISED BY / DATE REVISED:
CC 06/02/10
CC 12/16/10
CC 05/12/11

LAST REVISION 05-12-11
DATE PLOTTED => 15-JUL-2011
TIME PLOTTED => 12:45

FOR NOTES AND ABBREVIATIONS, SEE SHEET DQ-1

Dist	COUNTY	ROUTE	POST MILES TOTAL PROJECT	SHEET No.	TOTAL SHEETS
04	SCI	101	48.7/52.0	324	993

REGISTERED CIVIL ENGINEER 05-13-11 DATE

7-11-11
PLANS APPROVAL DATE

REGISTERED PROFESSIONAL ENGINEER ANALETTE OCHOA No. C 55279 Exp. 12/31/12 CIVIL STATE OF CALIFORNIA

THE STATE OF CALIFORNIA OR ITS OFFICERS OR AGENTS SHALL NOT BE RESPONSIBLE FOR THE ACCURACY OR COMPLETENESS OF SCANNED COPIES OF THIS PLAN SHEET.

WRECO
1243 ALPINE ROAD
SUITE 108
WALNUT CREEK, CA 94596

SANTA CLARA VALLEY TRANSPORTATION AUTHORITY
3331 N FIRST STREET
SAN JOSE, CA 95134

DRAINAGE QUANTITIES

DRAINAGE SYSTEM No.	DRAINAGE UNIT	ROCK SLOPE PROTECTION: BACKING No. 1, METHOD B (CY)	ROCK SLOPE PROTECTION: BACKING No 2, METHOD B (CY)	ROCK SLOPE PROTECTION: LIGHT, METHOD B (CY)	ROCK SLOPE PROTECTION: FABRIC (SQYD)	STRUCTURAL CONCRETE (HEADWALL) (CY)	CONCRETE BACKFILL (FAST SETTING CONCRETE) (CY)	MINOR CONCRETE: BACKFILL (CY)	MINOR CONCRETE: MINOR STRUCTURE (CY)	MINOR CONCRETE: DITCH LINING (CY)	MINOR CONCRETE: GUTTER DEPRESSION (CY)	PLACE HMA (Misc AREA) (SQYD)	MINOR HOT MIX ASPHALT (TON)	DITCH EXCAVATION (CY)	BAR REINFORCING STEEL (HEADWALL) (LB)	Misc IRON AND STEEL (LB)	WELDED WIRE FABRIC (6" x 6", W1.4 x W1.4)(N) (SQYD)	INLET FRAME AND GRATE (N): TYPE 24-12 (EA)	INLET FRAME AND GRATE (N): TYPE 18-9 (EA)	MH COVER (TYPE U45) (N) (EA)	HEIGHT OF INLET/MH (N) (LF)	CONCRETE COLLAR (N) (EA)	IMPORTED BIOFILTRATION SOIL (CY)	CLASS 1 PERMEABLE MATERIAL (CY)	ABANDON CULVERT (EA)	36" AUTOMATIC DRAINAGE GATE (EA)	42" AUTOMATIC DRAINAGE GATE (EA)	18" STEEL FLARED END SECTION (EA)	14"x23" OVAL SHAPED CONCRETE FLARED END SECTION (EA)	19"x30" OVAL SHAPED CONCRETE FLARED END SECTION (EA)	DESCRIPTION	STATION	DRAINAGE PLAN No.	DRAINAGE SYSTEM No.	DRAINAGE UNIT
38	a											2.6	0.9																		HMA OVERSIDE DRAIN	32.00′ Rt "RSF" 168+00.00	D-13	38	a
	b			7.8	20.0																										RSP (LIGHT, METHOD B)	38.30′ Rt "RSF" 168+00.00			b
	c													7.9																	UNLINED V-DITCH	81.25′ Rt "RSF" 167+11.01 TO 38.30′ Rt "RSF" 168+00.00			c
	d		6.0		21.0																										RSP (BACKING No. 2, METHOD B)	37.78′ Rt "RSF" 167+56.30			d
	e																														18" AFES	40.68′ Rt "RSF" 167+57.02			e
	f																														18" AFES	37.87′ Rt "RSF" 167+52.69			f
	g																														REMOVE HW	37.78′ Rt "RSF" 167+56.30			g
	h																														REMOVE Culv	37.78′ Rt "RSF" 167+56.30 TO 27.05′ Rt "RSF" 167+61.85			h
	i																														REMOVE DI	27.05′ Rt "RSF" 167+61.85			i
	j						19.4																								18" APC (B) w/ Conc Bkf (FSC)	26.10′ Lt "RSF" 167+95.89 TO 37.87′ Rt "RSF" 167+52.69			j
	k						19.4																								18" APC (B) w/ Conc Bkf (FSC)	24.06′ Lt "RSF" 167+99.46 TO 40.68′ Rt "RSF" 167+57.02			k
	l																														REMOVE Culv	27.05′ Rt "RSF" 167+61.85 TO 5.83′ Lt "RSF" 167+72.02			l
	m																														REMOVE HW	5.83′ Lt "RSF" 167+72.02			m
	n																														18" AFES	26.10′ Lt "RSF" 167+95.89			n
	o																														18" AFES	24.06′ Lt "RSF" 167+99.46			o
	p		6.0		21.0																										RSP (BACKING No. 2, METHOD B)	18.46′ Lt "RSF" 167+94.58			p
	q													40.7									100.8								BIOFILTRATION SWALE	101.04′ Rt "C" 168+00.00 TO 97.80′ Rt "C" 169+00.00			q
39	a																														REMOVE Conc (MISC)	44.63′ Rt "RSN" 167+99.00 TO 44.17′ Rt "RSN" 166+78.00	D-13	39	a
	b								1.5					0.8			4.4														LINED V-DITCH	42.60′ Rt "RSN" 166+80.82 TO 42.01′ Rt "RSN" 167+50.00			b
	c																														REMOVE Conc (MISC)	41.25′ Rt "RSN" 166+81.11			c
	d													0.6																	UNLINED V-DITCH	43.45′ Rt "RSN" 166+78.00 TO 42.68′ Rt "RSN" 167+60.00			d
	e																														REMOVE Culv	41.25′ Rt "RSN" 166+81.11 TO 38.54′ Rt "RSN" 167+32.29			e
	f																														REMOVE DI	38.54′ Rt "RSN" 167+32.29			f
	g								1.2							249			1		2.6										G4 DI (Mod)	37.94′ Rt "RSN" 167+90.00			g
	h							8.1																							14"x23" OVAL RCP w/ Conc Bkf	37.94′ Rt "RSN" 167+90.00 TO 37.36′ Rt "RSN" 168+34.84			h
	i																														REMOVE Culv	41.25′ Rt "RSN" 166+81.11 TO 31.27′ Rt "RSN" 169+30.14			i
	j								1.1							249			1		2.4										G4 DI (Mod)	37.36′ Rt "RSN" 168+34.84			j
	k						27.4																								14"x23" OVAL RCP w/ Conc Bkf (FSC)	28.22′ Lt "RSN" 168+20.00 TO 37.36′ Rt "RSN" 168+34.84			k
	l																												1		14"x23" Conc FES	30.10′ Rt "RSF" 168+04.69			l
	m																														REMOVE FES	37.37′ Rt "RSN" 168+93.54			m
	n																														REMOVE FES	32.70′ Rt "RSN" 170+57.05			n
	o																														REMOVE Culv	32.70′ Rt "RSN" 170+57.05 TO 33.06′ Rt "RSN" 173+94.93			o
SHEET TOTAL			12.0	7.8	62.0		66.3	8.1	2.3	1.5		2.6	0.9	50.0		498	4.4		2				100.8						1		SHEET TOTAL				

DRAINAGE QUANTITIES DQ-42

CC 05/12/11
CC 12/16/10
CC 06/02/10
REVISED BY / DATE REVISED
CLAIRE COUGHLAN / ANALETTE OCHOA
CALCULATED-DESIGNED BY / CHECKED BY
CONSULTANT FUNCTIONAL SUPERVISOR: HAN-BIN LIANG
STATE OF CALIFORNIA - DEPARTMENT OF TRANSPORTATION
Caltrans

LAST REVISION 05-12-11
DATE PLOTTED => 15-JUL-2011
TIME PLOTTED => 12:45

FOR NOTES AND ABBREVIATIONS, SEE SHEET DQ-1

Dist	COUNTY	ROUTE	POST MILES TOTAL PROJECT	SHEET No.	TOTAL SHEETS
04	SCI	101	48.7/52.0	325	993

REGISTERED CIVIL ENGINEER 05-13-11 DATE

7-11-11
PLANS APPROVAL DATE

REGISTERED PROFESSIONAL ENGINEER ANALETTE OCHOA No. C 55279 Exp. 12/31/12 CIVIL STATE OF CALIFORNIA

THE STATE OF CALIFORNIA OR ITS OFFICERS OR AGENTS SHALL NOT BE RESPONSIBLE FOR THE ACCURACY OR COMPLETENESS OF SCANNED COPIES OF THIS PLAN SHEET.

WRECO
1243 ALPINE ROAD
SUITE 108
WALNUT CREEK, CA 94596

SANTA CLARA VALLEY TRANSPORTATION AUTHORITY
3331 N FIRST STREET
SAN JOSE, CA 95134

DRAINAGE QUANTITIES

DRAINAGE SYSTEM No. ⬡	DRAINAGE UNIT ◯	REMOVE CULVERT (LF)	REMOVE INLET (EA)	REMOVE MH (EA)	REMOVE HEADWALL (EA)	REMOVE FES (EA)	REMOVE AUTOMATIC DRAINAGE GATE (EA)	REMOVE CONCRETE (MISCELLANEOUS) (CY)	CAP INLET (EA)	ADJUST INLET (EA)	18" ASP (LF)	12" ALTERNATIVE PIPE CULVERT (LF)	ALTERNATIVE PIPE CULVERT (TYPE A) 18" (LF)	ALTERNATIVE PIPE CULVERT (TYPE A) 24" (LF)	ALTERNATIVE PIPE CULVERT (TYPE A) 36" (LF)	ALTERNATIVE PIPE CULVERT (TYPE B) 18" (LF)	ALTERNATIVE PIPE CULVERT (TYPE B) 24" (LF)	ALTERNATIVE PIPE CULVERT (TYPE B) 30" (LF)	ALTERNATIVE PIPE CULVERT (TYPE B) 36" (LF)	ALTERNATIVE PIPE CULVERT (TYPE B) 42" (LF)	ALTERNATIVE PIPE CULVERT (TYPE B) 54" (LF)	14" x 23" OVAL RCP (CLASS III) (LF)	19" x 30" OVAL RCP (CLASS III) (LF)	18" CSP (LF)	18" AFES (EA)	24" AFES (EA)	30" AFES (EA)	36" AFES (EA)	24" TEE (N) (EA)	PIPE JOINT CLASSIFICATION (N)	MAXIMUM COVER (N) (LF)	DESCRIPTION	STATION	DRAINAGE PLAN No.	DRAINAGE SYSTEM No. ⬡	DRAINAGE UNIT ◯
40	a																															RSP (BACKING No. 2, METHOD B)	94.48′ Rt "C" 169+08.74	D-13	40	a
	b																									1						24 AFES	97.80′ Rt "C" 169+00.00			b
	c																44													S	2.6	24" APC (B)	16.31′ Rt "RSN" 169+46.93 TO 97.80′ Rt "C" 169+00.00			c
	d																															G2 DI w/ PCC APRON	16.31′ Rt "RSN" 169+46.93			d
	e																45													S	2.5	24" APC (B)	33.14′ Rt "RSN" 169+50.00 TO 16.31′ Rt "RSN" 169+46.93			e
	f																															G2 DI	33.14′ Rt "RSN" 169+50.00			f
	g																							5						DD	1.1	18" CSP	36.23′ Rt "RSN" 169+52.39 TO 33.14′ Rt "RSN" 169+50.00			g
	h																															STEEL AFES	36.23′ Rt "RSN" 169+52.39			h
	i																															RSP (BACKING No. 2, METHOD B)	40.43′ Rt "RSN" 169+50.00			i
	j																															UNLINED V-DITCH	33.78′ Rt "RSN" 170+75.00 TO 39.06′ Rt "RSN" 169+50.00			j
	k															46														S	3.1	18" APC (B) w/ Conc Bkf	35.88′ Rt "RSN" 168+90.00 TO 33.21′ Rt "RSN" 169+50.00			k
	l																															G2 DI	35.88′ Rt "RSN" 168+90.00			l
	m																41													S	2.8	24" APC (B)	29.25′ Rt "RSN" 170+00.00 TO 33.21′ Rt "RSN" 169+50.00			m
	n																															G2 DI	29.25′ Rt "RSN" 170+00.00			n
	o															42														S	3.2	18" APC (B)	23.95′ Rt "RSN" 170+70.00 TO 29.25′ Rt "RSN" 170+00.00			o
	p																															G2 DI	23.95′ Rt "RSN" 170+70.00			p
	q															45														S	3.0	18" APC (B)	28.34′ Rt "RSN" 171+19.75 TO 23.95′ Rt "RSN" 170+70.00			q
	r																															G2 DI	28.34′ Rt "RSN" 171+19.75			r
	s															49														S	2.3	18" APC (B) w/ Conc Bkf	34.67′ Rt "RSN" 171+70.00 TO 28.34′ Rt "RSN" 171+19.75			s
	t																															UNLINED V-DITCH	87.85′ Rt "C" 176+00.00 TO 33.78′ Rt "RSN" 170+75.00			t
	u																															G2 DI w/ SGD (In Grade Sag)	34.67′ Rt "RSN" 171+70.00	D-14		u
	v															47														S	1.7	18" APC (B) w/ Conc Bkf	31.61′ Rt "RSN" 172+20.00 TO 34.67′ Rt "RSN" 171+70.00			v
	w																															G2 DI	31.61′ Rt "RSN" 172+20.00			w
	x															120														S	2.2	18" APC (B) w/ Conc Bkf	20.04′ Rt "RSN" 173+42.67 TO 31.61′ Rt "RSN" 172+20.00			x
	y																															G2 DI	20.04′ Rt "RSN" 173+42.67			y
	z															254														S	2.1	18" APC (B) w/ Conc Bkf	79.00′ Rt "C" 176+00.00 TO 20.04′ Rt "C" 173+42.67			z
	aa																															G2 DI	79.00′ Rt "C" 176+00.00			aa
	ab																							9						DD	1.3	18" CSP	79.00′ Rt "C" 176+00.00 TO 86.62′ Rt "C" 176+05.55			ab
	ac																															STEEL AFES	86.62′ Rt "C" 176+05.55			ac
	ad																															RSP (BACKING No. 2, METHOD B)	86.62′ Rt "C" 176+05.55			ad
	ae																															UNLINED V-DITCH	87.85′ Rt "C" 176+10.00 TO 80.64′ Rt "C" 185+75.00			ae
	af												43																	S	3.0	18" APC (A)	65.00′ Rt "C" 169+85.00 TO 16.31′ Rt "RSN" 169+46.93	D-13		af
	ag																															G2 DI	65.00′ Rt "C" 169+85.00			ag
SHEET TOTAL													43			603	130							14		1						SHEET TOTAL				

DRAINAGE QUANTITIES DQ-43

STATE OF CALIFORNIA - DEPARTMENT OF TRANSPORTATION
Caltrans

CONSULTANT FUNCTIONAL SUPERVISOR: HAN-BIN LIANG

CALCULATED-DESIGNED BY: ANALETTE OCHOA
CHECKED BY: CLAIRE COUGHLAN

REVISED BY / DATE REVISED:
CC 06/02/10
CC 12/16/10
CC 05/12/11

LAST REVISION 05-12-11
DATE PLOTTED => 15-JUL-2011
TIME PLOTTED => 12:54

FOR NOTES AND ABBREVIATIONS, SEE SHEET DQ-1

Dist	COUNTY	ROUTE	POST MILES TOTAL PROJECT	SHEET No.	TOTAL SHEETS
04	SCI	101	48.7/52.0	326	993

REGISTERED CIVIL ENGINEER 05-13-11 DATE

7-11-11
PLANS APPROVAL DATE

REGISTERED PROFESSIONAL ENGINEER ANALETTE OCHOA No. C 55279 Exp. 12/31/12 CIVIL STATE OF CALIFORNIA

THE STATE OF CALIFORNIA OR ITS OFFICERS OR AGENTS SHALL NOT BE RESPONSIBLE FOR THE ACCURACY OR COMPLETENESS OF SCANNED COPIES OF THIS PLAN SHEET.

WRECO
1243 ALPINE ROAD
SUITE 108
WALNUT CREEK, CA 94596

SANTA CLARA VALLEY TRANSPORTATION AUTHORITY
3331 N FIRST STREET
SAN JOSE, CA 95134

DRAINAGE QUANTITIES

DRAINAGE SYSTEM No.	DRAINAGE UNIT	ROCK SLOPE PROTECTION: BACKING No. 1, METHOD B (CY)	ROCK SLOPE PROTECTION: BACKING No 2, METHOD B (CY)	ROCK SLOPE PROTECTION: LIGHT, METHOD B (CY)	ROCK SLOPE PROTECTION: FABRIC (SQYD)	STRUCTURAL CONCRETE (HEADWALL) (CY)	CONCRETE BACKFILL (FAST SETTING CONCRETE) (CY)	MINOR CONCRETE: BACKFILL (CY)	MINOR CONCRETE: MINOR STRUCTURE (CY)	MINOR CONCRETE: DITCH LINING (CY)	MINOR CONCRETE: GUTTER DEPRESSION (CY)	PLACE HMA (Misc AREA) (SQYD)	MINOR HOT MIX ASPHALT (TON)	DITCH EXCAVATION (CY)	BAR REINFORCING STEEL (HEADWALL) (LB)	Misc IRON AND STEEL (LB)	WELDED WIRE FABRIC (6" x 6", W1.4 x W1.4)(N) (SQYD)	INLET FRAME AND GRATE (N): TYPE 24-12 (EA)	INLET FRAME AND GRATE (N): TYPE 18-9 (EA)	MH COVER (TYPE U45) (N) (EA)	HEIGHT OF INLET/MH (N) (LF)	CONCRETE COLLAR (N) (EA)	IMPORTED BIOFILTRATION SOIL (CY)	CLASS 1 PERMEABLE MATERIAL (CY)	ABANDON CULVERT (EA)	36" AUTOMATIC DRAINAGE GATE (EA)	42" AUTOMATIC DRAINAGE GATE (EA)	18" STEEL FLARED END SECTION (EA)	14"x23" OVAL SHAPED CONCRETE FLARED END SECTION (EA)	19"x30" OVAL SHAPED CONCRETE FLARED END SECTION (EA)	DESCRIPTION	STATION	DRAINAGE PLAN No.	DRAINAGE SYSTEM No.	DRAINAGE UNIT
40	a		5.0		19.0																										RSP (BACKING No. 2, METHOD B)	94.48′ R† "C" 169+08.74	D-13	40	a
	b					1.2									75																24 AFES	97.80′ R† "C" 169+00.00			b
	c																														24" APC (B)	16.31′ R† "RSN" 169+46.93 TO 97.80′ R† "C" 169+00.00			c
	d								1.7		0.4					326	4.2	1			4.6										G2 DI w/ PCC APRON	16.31′ R† "RSN" 169+46.93			d
	e																														24" APC (B)	33.14′ R† "RSN" 169+50.00 TO 16.31′ R† "RSN" 169+46.93			e
	f								1.7							326		1			4.5										G2 DI	33.14′ R† "RSN" 169+50.00			f
	g																														18" CSP	36.23′ R† "RSN" 169+52.39 TO 33.14′ R† "RSN" 169+50.00			g
	h																											1			STEEL AFES	36.23′ R† "RSN" 169+52.39			h
	i		4.1		13.0																										RSP (BACKING No. 2, METHOD B)	40.43′ R† "RSN" 169+50.00			i
	j													26.0																	UNLINED V-DITCH	33.78′ R† "RSN" 170+75.00 TO 39.06′ R† "RSN" 169+50.00			j
	k							11.8																							18" APC (B) w/ Conc Bkf	35.88′ R† "RSN" 168+90.00 TO 33.21′ R† "RSN" 169+50.00			k
	l								1.2							326		1			2.8										G2 DI	35.88′ R† "RSN" 168+90.00			l
	m																														24" APC (B)	29.25′ R† "RSN" 170+00.00 TO 33.21′ R† "RSN" 169+50.00			m
	n								1.8							326		1			4.8										G2 DI	29.25′ R† "RSN" 170+00.00			n
	o																														18" APC (B)	23.95′ R† "RSN" 170+70.00 TO 29.25′ R† "RSN" 170+00.00			o
	p								1.7							326		1			4.6										G2 DI	23.95′ R† "RSN" 170+70.00			p
	q																														18" APC (B)	28.34′ R† "RSN" 171+19.75 TO 23.95′ R† "RSN" 170+70.00			q
	r								1.5							326		1			3.9										G2 DI	28.34′ R† "RSN" 171+19.75			r
	s							12.5																							18" APC (B) w/ Conc Bkf	34.67′ R† "RSN" 171+70.00 TO 28.34′ R† "RSN" 171+19.75			s
	t													34.7																	UNLINED V-DITCH	87.85′ R† "C" 176+00.00 TO 33.78′ R† "RSN" 170+75.00			t
	u								1.4		1.5					326		1			3.2										G2 DI w/ SGD (In Grade Sag)	34.67′ R† "RSN" 171+70.00	D-14		u
	v							12.0																							18" APC (B) w/ Conc Bkf	31.61′ R† "RSN" 172+20.00 TO 34.67′ R† "RSN" 171+70.00			v
	w								1.4							326		1			3.3										G2 DI	31.61′ R† "RSN" 172+20.00			w
	x							30.7																							18" APC (B) w/ Conc Bkf	20.04′ R† "RSN" 173+42.67 TO 31.61′ R† "RSN" 172+20.00			x
	y								1.5							326		1			3.7										G2 DI	20.04′ R† "RSN" 173+42.67			y
	z							64.9																							18" APC (B) w/ Conc Bkf	79.00′ R† "C" 176+00.00 TO 20.04′ R† "C" 173+42.67			z
	aa								1.3							326		1			3.0										G2 DI	79.00′ R† "C" 176+00.00			aa
	ab																														18" CSP	79.00′ R† "C" 176+00.00 TO 86.62′ R† "C" 176+05.55			ab
	ac																											1			STEEL AFES	86.62′ R† "C" 176+05.55			ac
	ad		5.7		16.0																										RSP (BACKING No. 2, METHOD B)	86.62′ R† "C" 176+05.55			ad
	ae													208.0																	UNLINED V-DITCH	87.85′ R† "C" 176+10.00 TO 80.64′ R† "C" 185+75.00			ae
	af																														18" APC (A)	65.00′ R† "C" 169+85.00 TO 16.31′ R† "RSN" 169+46.93	D-13		af
	ag								1.6							326		1			4.2										G2 DI	65.00′ R† "C" 169+85.00			ag
SHEET TOTAL			14.8		48.0	1.2		131.8	16.8		1.9			268.7	75	3586	4.2	11										2			SHEET TOTAL				

DRAINAGE QUANTITIES DQ-44

CC 05/12/11
CC 12/16/10
CC 06/02/10
REVISED BY / DATE REVISED
CLAIRE COUGHLAN / ANALETTE OCHOA
CALCULATED-DESIGNED BY / CHECKED BY
CONSULTANT FUNCTIONAL SUPERVISOR: HAN-BIN LIANG
STATE OF CALIFORNIA - DEPARTMENT OF TRANSPORTATION
Caltrans

LAST REVISION 05-12-11
DATE PLOTTED => 15-JUL-2011
TIME PLOTTED => 12:45

FOR NOTES AND ABBREVIATIONS, SEE SHEET DQ-1

Dist	COUNTY	ROUTE	POST MILES TOTAL PROJECT	SHEET No.	TOTAL SHEETS
04	SCI	101	48.7/52.0	327	993

REGISTERED CIVIL ENGINEER 05-13-11 DATE

7-11-11
PLANS APPROVAL DATE

REGISTERED PROFESSIONAL ENGINEER ANALETTE OCHOA No. C 55279 Exp. 12/31/12 CIVIL STATE OF CALIFORNIA

THE STATE OF CALIFORNIA OR ITS OFFICERS OR AGENTS SHALL NOT BE RESPONSIBLE FOR THE ACCURACY OR COMPLETENESS OF SCANNED COPIES OF THIS PLAN SHEET.

WRECO
1243 ALPINE ROAD
SUITE 108
WALNUT CREEK, CA 94596

SANTA CLARA VALLEY
TRANSPORTATION AUTHORITY
3331 N FIRST STREET
SAN JOSE, CA 95134

DRAINAGE QUANTITIES

DRAINAGE SYSTEM No.	DRAINAGE UNIT	REMOVE CULVERT (LF)	REMOVE INLET (EA)	REMOVE MH (EA)	REMOVE HEADWALL (EA)	REMOVE FES (EA)	REMOVE AUTOMATIC DRAINAGE GATE (EA)	REMOVE CONCRETE (MISCELLANEOUS) (CY)	CAP INLET (EA)	ADJUST INLET (EA)	18" ASP (LF)	12" ALTERNATIVE PIPE CULVERT (LF)	ALTERNATIVE PIPE CULVERT (TYPE A) 18" (LF)	ALTERNATIVE PIPE CULVERT (TYPE A) 24" (LF)	ALTERNATIVE PIPE CULVERT (TYPE A) 36" (LF)	ALTERNATIVE PIPE CULVERT (TYPE B) 18" (LF)	ALTERNATIVE PIPE CULVERT (TYPE B) 24" (LF)	ALTERNATIVE PIPE CULVERT (TYPE B) 30" (LF)	ALTERNATIVE PIPE CULVERT (TYPE B) 36" (LF)	ALTERNATIVE PIPE CULVERT (TYPE B) 42" (LF)	ALTERNATIVE PIPE CULVERT (TYPE B) 54" (LF)	14" x 23" OVAL RCP (CLASS III) (LF)	19" x 30" OVAL RCP (CLASS III) (LF)	18" CSP (LF)	18" AFES (EA)	24" AFES (EA)	30" AFES (EA)	36" AFES (EA)	24" TEE (N) (EA)	PIPE JOINT CLASSIFICATION (N)	MAXIMUM COVER (N) (LF)	DESCRIPTION	STATION	DRAINAGE PLAN No.	DRAINAGE SYSTEM No.	DRAINAGE UNIT
40	ah												62																	S	2.6	18" APC (A)	65.00′ Rt "C" 170+50.00 TO 65.00′ Rt "C" 169+85.00	D-13	40	ah
	ai																															G2 DI	65.00′ Rt "C" 170+50.00			ai
41	a		1																													REMOVE DI	65.45′ Lt "C" 186+71.38	D-15	41	a
	b	41																														REMOVE Culv	65.45′ Lt "C" 186+71.38 TO 68.44′ Lt "C" 187+14.68			b
	c		1																													REMOVE DI	67.15′ Lt "C" 187+14.77			c
	d	20																														REMOVE Culv	68.44′ Lt "C" 187+14.68 TO 89.75′ Lt "C" 187+14.64			d
	e																															G2 DI w/ SGD (In Grade Sag)	83.41′ Lt "C" 187+00.00			e
	f												12																	P	7.5	18" APC (A)	83.41′ Lt "C" 187+00.00 TO 83.54′ Lt "C" 187+14.63			f
	g																															G2 DI	83.54′ Lt "C" 187+14.63			g
	h												5																	P	7.6	18" APC (A)	83.54′ Lt "C" 187+14.63 TO 89.75′ Lt "C" 187+14.64			h
	i						1																									REMOVE AUTOMATIC DRAINAGE GATE	90.16′ Lt "C" 186+79.40			i
	j	34																														REMOVE Culv	90.16′ Lt "C" 186+79.40 TO 89.75′ Lt "C" 187+14.64			j
	k														46															S	5.0	36" APC (A)	89.75′ Lt "C" 187+14.64 TO 99.69′ Lt "C" 186+67.30			k
	l																															42" AUTOMATIC DRAINAGE GATE	99.69′ Lt "C" 186+67.30			l
	m	5																														REMOVE Culv (PORTION)	117.66′ Lt "C" 186+61.68 TO 117.34′ Lt "C" 186+66.54			m
	n																				5									S	10.0	54" APC (B) w/ Conc COLLAR	117.14′ Lt "C" 186+66.55 TO 116.81′ Lt "C" 186+71.54			n
	o									1																						Adj DI	89.07′ Lt "C" 188+79.34			o
42	a																															RSP (BACKING No. 2, METHOD B)	84.11′ Rt "C" 188+73.25	D-15	42	a
	b																															LINED V-DITCH	84.11′ Rt "C" 188+73.25 TO 89.76′ Rt "C" 197+22.99			b
	c				1																											REMOVE HW	77.81′ Rt "C" 197+23.51			c
	d															8														S	2.1	18" APC (B) w/ Conc COLLAR	77.81′ Rt "C" 197+23.51 TO 85.04′ Rt "C" 197+23.51			d
	e																															STRAIGHT HW	85.04′ Rt "C" 197+23.51			e
	f																															RSP (BACKING No. 2, METHOD B)	85.04′ Rt "C" 197+23.51			f
	g																															RSP (BACKING No. 2, METHOD B)	84.80′ Rt "C" 197+76.84			g
	h																															G2 DI	74.85′ Lt "C" 196+30.00			h
	i															224														S	4.0	18" APC (B)	74.85′ Lt "C" 196+30.00 TO 82.80′ Lt "C" 198+57.27			i
	j										224																			S		18" ASP	74.85′ Lt "C" 196+30.00 TO 82.80′ Lt "C" 198+57.27			j
	k																															G2 DI w/ SGD (On Grade)	82.80′ Lt "C" 198+57.27			k
	l															66														S	4.1	18" APC (B)	82.80′ Lt "C" 198+57.27 TO 88.18′ Lt "C" 199+26.60			l
	m									1																						Adj DI	88.18′ Lt "C" 199+26.60			m
SHEET TOTAL		100	2		1		1			2	224		79		46	298					5											SHEET TOTAL				

DRAINAGE QUANTITIES DQ-45

STATE OF CALIFORNIA - DEPARTMENT OF TRANSPORTATION
Caltrans

CONSULTANT FUNCTIONAL SUPERVISOR: HAN-BIN LIANG

CALCULATED-DESIGNED BY: CLAIRE COUGHLAN
CHECKED BY: ANALETTE OCHOA

REVISED BY / DATE REVISED:
CC 05/12/11
CC 12/16/10
CC 06/02/10

LAST REVISION 05-12-11
DATE PLOTTED => 15-JUL-2011
TIME PLOTTED => 12:45

FOR NOTES AND ABBREVIATIONS, SEE SHEET DQ-1

Dist	COUNTY	ROUTE	POST MILES TOTAL PROJECT	SHEET No.	TOTAL SHEETS
04	SCI	101	48.7/52.0	328	993

REGISTERED CIVIL ENGINEER 05-13-11 DATE

7-11-11
PLANS APPROVAL DATE

REGISTERED PROFESSIONAL ENGINEER ANALETTE OCHOA No. C 55279 Exp. 12/31/12 CIVIL STATE OF CALIFORNIA

THE STATE OF CALIFORNIA OR ITS OFFICERS OR AGENTS SHALL NOT BE RESPONSIBLE FOR THE ACCURACY OR COMPLETENESS OF SCANNED COPIES OF THIS PLAN SHEET.

WRECO
1243 ALPINE ROAD
SUITE 108
WALNUT CREEK, CA 94596

SANTA CLARA VALLEY TRANSPORTATION AUTHORITY
3331 N FIRST STREET
SAN JOSE, CA 95134

DRAINAGE QUANTITIES

DRAINAGE SYSTEM No.	DRAINAGE UNIT	ROCK SLOPE PROTECTION: BACKING No. 1, METHOD B (CY)	ROCK SLOPE PROTECTION: BACKING No 2, METHOD B (CY)	ROCK SLOPE PROTECTION: LIGHT, METHOD B (CY)	ROCK SLOPE PROTECTION: FABRIC (SQYD)	STRUCTURAL CONCRETE (HEADWALL) (CY)	CONCRETE BACKFILL (FAST SETTING CONCRETE) (CY)	MINOR CONCRETE: BACKFILL (CY)	MINOR CONCRETE: MINOR STRUCTURE (CY)	MINOR CONCRETE: DITCH LINING (CY)	MINOR CONCRETE: GUTTER DEPRESSION (CY)	PLACE HMA (Misc AREA) (SQYD)	MINOR HOT MIX ASPHALT (TON)	DITCH EXCAVATION (CY)	BAR REINFORCING STEEL (HEADWALL) (LB)	Misc IRON AND STEEL (LB)	WELDED WIRE FABRIC (6" x 6", W1.4 x W1.4)(N) (SQYD)	INLET FRAME AND GRATE (N): TYPE 24-12 (EA)	INLET FRAME AND GRATE (N): TYPE 18-9 (EA)	MH COVER (TYPE U45) (N) (EA)	HEIGHT OF INLET/MH (N) (LF)	CONCRETE COLLAR (N) (EA)	IMPORTED BIOFILTRATION SOIL (CY)	CLASS 1 PERMEABLE MATERIAL (CY)	ABANDON CULVERT (EA)	36" AUTOMATIC DRAINAGE GATE (EA)	42" AUTOMATIC DRAINAGE GATE (EA)	18" STEEL FLARED END SECTION (EA)	14"x23" OVAL SHAPED CONCRETE FLARED END SECTION (EA)	19"x30" OVAL SHAPED CONCRETE FLARED END SECTION (EA)	DESCRIPTION	STATION	DRAINAGE PLAN No.	DRAINAGE SYSTEM No.	DRAINAGE UNIT
40	ah																														18" APC (A)	65.00' Rt "C" 170+50.00 TO 65.00' Rt "C" 169+85.00	D-13	40	ah
	ai								1.5							326		1			3.8										G2 DI	65.00' Rt "C" 170+50.00			ai
41	a																														REMOVE DI	65.45' Lt "C" 186+71.38	D-15	41	a
	b																														REMOVE Culv	65.45' Lt "C" 186+71.38 TO 68.44' Lt "C" 187+14.68			b
	c																														REMOVE DI	67.15' Lt "C" 187+14.77			c
	d																														REMOVE Culv	68.44' Lt "C" 187+14.68 TO 89.75' Lt "C" 187+14.64			d
	e								3.5		1.5					326		1			8.1										G2 DI w/ SGD (In Grade Sag)	83.41' Lt "C" 187+00.00			e
	f																														18" APC (A)	83.41' Lt "C" 187+00.00 TO 83.54' Lt "C" 187+14.63			f
	g								3.9							326		1			9.2										G2 DI	83.54' Lt "C" 187+14.63			g
	h																														18" APC (A)	83.54' Lt "C" 187+14.63 TO 89.75' Lt "C" 187+14.64			h
	i																														REMOVE AUTOMATIC DRAINAGE GATE	90.16' Lt "C" 186+79.40			i
	j																														REMOVE Culv	90.16' Lt "C" 186+79.40 TO 89.75' Lt "C" 187+14.64			j
	k																														36" APC (A)	89.75' Lt "C" 187+14.64 TO 99.69' Lt "C" 186+67.30			k
	l																										1				42" AUTOMATIC DRAINAGE GATE	99.69' Lt "C" 186+67.30			l
	m																														REMOVE Culv (PORTION)	117.66' Lt "C" 186+61.68 TO 117.34' Lt "C" 186+66.54			m
	n																					1									54" APC (B) w/ Conc COLLAR	117.14' Lt "C" 186+66.55 TO 116.81' Lt "C" 186+71.54			n
	o																														Adj DI	89.07' Lt "C" 188+79.34			o
42	a		14.5		32.0																										RSP (BACKING No. 2, METHOD B)	84.11' Rt "C" 188+73.25	D-15	42	a
	b									75.6				188.8			226.9														LINED V-DITCH	84.11' Rt "C" 188+73.25 TO 89.76' Rt "C" 197+22.99			b
	c																														REMOVE HW	77.81' Rt "C" 197+23.51			c
	d																					1									18" APC (B) w/ Conc COLLAR	77.81' Rt "C" 197+23.51 TO 85.04' Rt "C" 197+23.51			d
	e					0.9									50																STRAIGHT HW	85.04' Rt "C" 197+23.51			e
	f		4.8		16.0																										RSP (BACKING No. 2, METHOD B)	85.04' Rt "C" 197+23.51			f
	g		7.8		27.0																										RSP (BACKING No. 2, METHOD B)	84.80' Rt "C" 197+76.84			g
	h								1.7							326		1			4.5										G2 DI	74.85' Lt "C" 196+30.00			h
	i																														18" APC (B)	74.85' Lt "C" 196+30.00 TO 82.80' Lt "C" 198+57.27			i
	j																														18" ASP	74.85' Lt "C" 196+30.00 TO 82.80' Lt "C" 198+57.27			j
	k								2.0		1.2					326		1			5.6										G2 DI w/ SGD (On Grade)	82.80' Lt "C" 198+57.27			k
	l																														18" APC (B)	82.80' Lt "C" 198+57.27 TO 88.18' Lt "C" 199+26.60			l
	m																														Adj DI	88.18' Lt "C" 199+26.60			m
SHEET TOTAL			27.1		75.0	0.9			12.5	75.6	2.6			188.8	50	1630	226.9	5				2					1				SHEET TOTAL				

DRAINAGE QUANTITIES DQ-46

REVISED BY	DATE REVISED
CC	05/12/11
CC	12/16/10
CC	06/02/10

CALCULATED-DESIGNED BY: CLAIRE COUGHLAN
CHECKED BY: ANALETTE OCHOA
CONSULTANT FUNCTIONAL SUPERVISOR: HAN-BIN LIANG

STATE OF CALIFORNIA - DEPARTMENT OF TRANSPORTATION
Caltrans

LAST REVISION 05-12-11
DATE PLOTTED => 15-JUL-2011
TIME PLOTTED => 12:45

FOR NOTES AND ABBREVIATIONS, SEE SHEET DQ-1

Dist	COUNTY	ROUTE	POST MILES TOTAL PROJECT	SHEET No.	TOTAL SHEETS
04	SCI	101	48.7/52.0	329	993

REGISTERED CIVIL ENGINEER — DATE 05-13-11

7-11-11
PLANS APPROVAL DATE

REGISTERED PROFESSIONAL ENGINEER — ANALETTE OCHOA — No. C 55279 — Exp. 12/31/12 — CIVIL — STATE OF CALIFORNIA

THE STATE OF CALIFORNIA OR ITS OFFICERS OR AGENTS SHALL NOT BE RESPONSIBLE FOR THE ACCURACY OR COMPLETENESS OF SCANNED COPIES OF THIS PLAN SHEET.

WRECO
1243 ALPINE ROAD
SUITE 108
WALNUT CREEK, CA 94596

SANTA CLARA VALLEY
TRANSPORTATION AUTHORITY
3331 N FIRST STREET
SAN JOSE, CA 95134

DRAINAGE QUANTITIES

DRAINAGE SYSTEM No.	DRAINAGE UNIT	REMOVE CULVERT (LF)	REMOVE INLET (EA)	REMOVE MH (EA)	REMOVE HEADWALL (EA)	REMOVE FES (EA)	REMOVE AUTOMATIC DRAINAGE GATE (EA)	REMOVE CONCRETE (MISCELLANEOUS) (CY)	CAP INLET (EA)	ADJUST INLET (EA)	18" ASP (LF)	12" ALTERNATIVE PIPE CULVERT (LF)	ALTERNATIVE PIPE CULVERT (TYPE A) 18" (LF)	ALTERNATIVE PIPE CULVERT (TYPE A) 24" (LF)	ALTERNATIVE PIPE CULVERT (TYPE A) 36" (LF)	ALTERNATIVE PIPE CULVERT (TYPE B) 18" (LF)	ALTERNATIVE PIPE CULVERT (TYPE B) 24" (LF)	ALTERNATIVE PIPE CULVERT (TYPE B) 30" (LF)	ALTERNATIVE PIPE CULVERT (TYPE B) 36" (LF)	ALTERNATIVE PIPE CULVERT (TYPE B) 42" (LF)	ALTERNATIVE PIPE CULVERT (TYPE B) 54" (LF)	14" x 23" OVAL RCP (CLASS III) (LF)	19" x 30" OVAL RCP (CLASS III) (LF)	18" CSP (LF)	18" AFES (EA)	24" AFES (EA)	30" AFES (EA)	36" AFES (EA)	24" TEE (N) (EA)	PIPE JOINT CLASSIFICATION (N)	MAXIMUM COVER (N) (LF)	DESCRIPTION	STATION	DRAINAGE PLAN No.	DRAINAGE SYSTEM No.	DRAINAGE UNIT
43	a																		3												S	6.5	36" APC (B)	84.98' Lt "C" 188+79.34 TO 89.07' Lt "C" 188+79.34	D-15	43	a
	b																																G2 DI w/ SGD (On Grade)	84.98' Lt "C" 188+79.34			b
	c	162																															REMOVE Culv	89.07' Lt "C" 188+79.34 TO 89.43' Lt "C" 190+44.23			c
	d																		252												S	6.4	36" APC (B)	84.98' Lt "C" 188+79.34 TO 89.37' Lt "C" 191+34.51			d
	e		1																														REMOVE DI	89.43' Lt "C" 190+44.23			e
	f	10																															REMOVE Culv	89.43' Lt "C" 190+44.23 TO 78.02' Lt "C" 190+44.47			f
	g		1																														REMOVE DI	78.02' Lt "C" 190+44.47			g
	h	85																															REMOVE Culv	89.43' Lt "C" 190+44.23 TO 83.72' Lt "C" 191+35.00			h
	i																																G2 DI w/ SGD (On Grade)	89.37' Lt "C" 191+34.51			i
	j																		3												S	19.4	36" APC (B)	89.37' Lt "C" 191+34.51 TO 83.70' Lt "C" 191+35.05			j
	k								1																								CAP DI	83.70' Lt "C" 191+35.05			k
	l																																G2 DI w/ SGD (In Grade Sag)	91.08' Lt "C" 192+19.55			l
	m																6														S	5.8	24" APC (B)	91.08' Lt "C" 192+19.55 TO 81.03' Lt "C" 192+19.76			m
	n								1																								CAP DI	81.03' Lt "C" 192+19.76			n
	o	114																															REMOVE Culv	81.38' Lt "C" 192+19.85 TO 83.53' Lt "C" 193+37.19			o
	p																114														S	5.8	24" APC (B)	20.00' Lt "SHNN" 193+36.00 TO 91.08' Lt "C" 192+19.55			p
	q		1																														REMOVE DI	83.53' Lt "C" 193+37.19			q
	r																																G2 DI w/ SGD (On Grade)	20.00' Lt "SHNN" 193+36.00			r
	s															180															S	5.6	24" APC (A)	21.66' Lt "C" 195+18.94 TO 20.00' Lt "SHNN" 193+36.00			s
	t	179																															REMOVE Culv	83.53' Lt "C" 193+37.19 TO 21.66' Lt "SHNN" 195+18.94			t
	u									1																							Adj DI	21.66' Lt "SHNN" 195+18.94			u
	v									1																							Adj DI	23.61' Lt "SHNN" 195+51.55			v
	w									1																							Adj DI	26.41' Lt "SHNN" 195+84.22			w
	x									1																							Adj DI	37.53' Lt "SHNN" 198+13.30			x
	y	64																															REMOVE Culv	37.15' Lt "SHNN" 198+13.05 TO 42.00' Lt "SHNN" 198+85.00			y
	z																41														S	2.7	24" APC (B) w/ Conc Bkf	40.64' Lt "SHNN" 198+60.12 TO 37.53' Lt "SHNN" 198+13.30			z
	aa																																G2 DI w/ SGD (In Grade Sag)	40.64' Lt "SHNN" 198+60.12	D-16		aa
	ab																24														S	1.5	24" APC (B) w/ Conc Bkf	42.13' Lt "SHNN" 198+84.45 TO 40.64' Lt "SHNN" 198+60.12			ab
	ac									1																							Adj DI	42.13' Lt "SHNN" 198+84.45			ac
	ad									1																							Adj DI	42.67' Lt "SHNN" 199+23.51			ad
SHEET TOTAL		614	3						2	6						180			185		258												SHEET TOTAL				

DRAINAGE QUANTITIES DQ-47

CC 05/12/11 | CC 12/16/10 | CC 06/02/10 | REVISED BY / DATE REVISED

CLAIRE COUGHLAN — ANALETTE OCHOA — CALCULATED-DESIGNED BY — CHECKED BY

CONSULTANT FUNCTIONAL SUPERVISOR: HAN-BIN LIANG

STATE OF CALIFORNIA - DEPARTMENT OF TRANSPORTATION — Caltrans

LAST REVISION 05-12-11 — DATE PLOTTED => 15-JUL-2011 — TIME PLOTTED => 12:46

FOR NOTES AND ABBREVIATIONS, SEE SHEET DQ-1

Dist	COUNTY	ROUTE	POST MILES TOTAL PROJECT	SHEET No.	TOTAL SHEETS
04	SCI	101	48.7/52.0	330	993

REGISTERED CIVIL ENGINEER 05-13-11 DATE

7-11-11
PLANS APPROVAL DATE

REGISTERED PROFESSIONAL ENGINEER ANALETTE OCHOA No. C 55279 Exp. 12/31/12 CIVIL STATE OF CALIFORNIA

THE STATE OF CALIFORNIA OR ITS OFFICERS OR AGENTS SHALL NOT BE RESPONSIBLE FOR THE ACCURACY OR COMPLETENESS OF SCANNED COPIES OF THIS PLAN SHEET.

WRECO
1243 ALPINE ROAD
SUITE 108
WALNUT CREEK, CA 94596

SANTA CLARA VALLEY
TRANSPORTATION AUTHORITY
3331 N FIRST STREET
SAN JOSE, CA 95134

DRAINAGE QUANTITIES

DRAINAGE SYSTEM No.	DRAINAGE UNIT	ROCK SLOPE PROTECTION: BACKING No. 1, METHOD B (CY)	ROCK SLOPE PROTECTION: BACKING No 2, METHOD B (CY)	ROCK SLOPE PROTECTION: LIGHT, METHOD B (CY)	ROCK SLOPE PROTECTION: FABRIC (SQYD)	STRUCTURAL CONCRETE (HEADWALL) (CY)	CONCRETE BACKFILL (FAST SETTING CONCRETE) (CY)	MINOR CONCRETE: BACKFILL (CY)	MINOR CONCRETE: MINOR STRUCTURE (CY)	MINOR CONCRETE: DITCH LINING (CY)	MINOR CONCRETE: GUTTER DEPRESSION (CY)	PLACE HMA (Misc AREA) (SQYD)	MINOR HOT MIX ASPHALT (TON)	DITCH EXCAVATION (CY)	BAR REINFORCING STEEL (HEADWALL) (LB)	Misc IRON AND STEEL (LB)	WELDED WIRE FABRIC (6" x 6", W1.4 x W1.4)(N) (SQYD)	INLET FRAME AND GRATE (N): TYPE 24-12 (EA)	INLET FRAME AND GRATE (N): TYPE 18-9 (EA)	MH COVER (TYPE U45) (N) (EA)	HEIGHT OF INLET/MH (N) (LF)	CONCRETE COLLAR (N) (EA)	IMPORTED BIOFILTRATION SOIL (CY)	CLASS 1 PERMEABLE MATERIAL (CY)	ABANDON CULVERT (EA)	36" AUTOMATIC DRAINAGE GATE (EA)	42" AUTOMATIC DRAINAGE GATE (EA)	18" STEEL FLARED END SECTION (EA)	14"x23" OVAL SHAPED CONCRETE FLARED END SECTION (EA)	19"x30" OVAL SHAPED CONCRETE FLARED END SECTION (EA)	DESCRIPTION	STATION	DRAINAGE PLAN No.	DRAINAGE SYSTEM No.	DRAINAGE UNIT
43	a																														36" APC (B)	84.98′ Lt "C" 188+79.34 TO 89.07′ Lt "C" 188+79.34	D-15	43	a
	b								4.0		1.2					326		1			9.5										G2 DI w/ SGD (On Grade)	84.98′ Lt "C" 188+79.34			b
	c																														REMOVE Culv	89.07′ Lt "C" 188+79.34 TO 89.43′ Lt "C" 190+44.23			c
	d																														36" APC (B)	84.98′ Lt "C" 188+79.34 TO 89.37′ Lt "C" 191+34.51			d
	e																														REMOVE DI	89.43′ Lt "C" 190+44.23			e
	f																														REMOVE Culv	89.43′ Lt "C" 190+44.23 TO 78.02′ Lt "C" 190+44.47			f
	g																														REMOVE DI	78.02′ Lt "C" 190+44.47			g
	h																														REMOVE Culv	89.43′ Lt "C" 190+44.23 TO 83.72′ Lt "C" 191+35.00			h
	i								3.8		1.2					326		1			9.0										G2 DI w/ SGD (On Grade)	89.37′ Lt "C" 191+34.51			i
	j																														36" APC (B)	89.37′ Lt "C" 191+34.51 TO 83.70′ Lt "C" 191+35.05			j
	k																														CAP DI	83.70′ Lt "C" 191+35.05			k
	l								2.5		1.5					326		1			7.8										G2 DI w/ SGD (In Grade Sag)	91.08′ Lt "C" 192+19.55			l
	m																														24" APC (B)	91.08′ Lt "C" 192+19.55 TO 81.03′ Lt "C" 192+19.76			m
	n																														CAP DI	81.03′ Lt "C" 192+19.76			n
	o																														REMOVE Culv	81.38′ Lt "C" 192+19.85 TO 83.53′ Lt "C" 193+37.19			o
	p																														24" APC (B)	20.00′ Lt "SHNN" 193+36.00 TO 91.08′ Lt "C" 192+19.55			p
	q																														REMOVE DI	83.53′ Lt "C" 193+37.19			q
	r								2.5		1.2					326		1			7.5										G2 DI w/ SGD (On Grade)	20.00′ Lt "SHNN" 193+36.00			r
	s																														24" APC (A)	21.66′ Lt "C" 195+18.94 TO 20.00′ Lt "SHNN" 193+36.00			s
	t																														REMOVE Culv	83.53′ Lt "C" 193+37.19 TO 21.66′ Lt "SHNN" 195+18.94			t
	u																														Adj DI	21.66′ Lt "SHNN" 195+18.94			u
	v																														Adj DI	23.61′ Lt "SHNN" 195+51.55			v
	w																														Adj DI	26.41′ Lt "SHNN" 195+84.22			w
	x																														Adj DI	37.53′ Lt "SHNN" 198+13.30			x
	y																														REMOVE Culv	37.15′ Lt "SHNN" 198+13.05 TO 42.00′ Lt "SHNN" 198+85.00			y
	z							13.2																							24" APC (B) w/ Conc Bkf	40.64′ Lt "SHNN" 198+60.12 TO 37.53′ Lt "SHNN" 198+13.30			z
	aa								1.5		1.5					326		1			3.6										G2 DI w/ SGD (In Grade Sag)	40.64′ Lt "SHNN" 198+60.12	D-16		aa
	ab							7.7																							24" APC (B) w/ Conc Bkf	42.13′ Lt "SHNN" 198+84.45 TO 40.64′ Lt "SHNN" 198+60.12			ab
	ac																														Adj DI	42.13′ Lt "SHNN" 198+84.45			ac
	ad																														Adj DI	42.67′ Lt "SHNN" 199+23.51			ad
SHEET TOTAL								21.0	14.3		6.4					1630		5													SHEET TOTAL				

DRAINAGE QUANTITIES DQ-48

STATE OF CALIFORNIA - DEPARTMENT OF TRANSPORTATION
Caltrans

CONSULTANT FUNCTIONAL SUPERVISOR: HAN-BIN LIANG

CALCULATED-DESIGNED BY: CLAIRE COUGHLAN
CHECKED BY: ANALETTE OCHOA

REVISED BY / DATE REVISED:
CC 06/02/10
CC 12/16/10
CC 05/12/11

LAST REVISION 05-12-11
DATE PLOTTED => 15-JUL-2011
TIME PLOTTED => 12:46

FOR NOTES AND ABBREVIATIONS, SEE SHEET DQ-1

Dist	COUNTY	ROUTE	POST MILES TOTAL PROJECT	SHEET No.	TOTAL SHEETS
04	SCI	101	48.7/52.0	331	993

REGISTERED CIVIL ENGINEER 05-13-11 DATE

7-11-11
PLANS APPROVAL DATE

REGISTERED PROFESSIONAL ENGINEER ANALETTE OCHOA No. C 55279 Exp. 12/31/12 CIVIL STATE OF CALIFORNIA

THE STATE OF CALIFORNIA OR ITS OFFICERS OR AGENTS SHALL NOT BE RESPONSIBLE FOR THE ACCURACY OR COMPLETENESS OF SCANNED COPIES OF THIS PLAN SHEET.

WRECO
1243 ALPINE ROAD
SUITE 108
WALNUT CREEK, CA 94596

SANTA CLARA VALLEY TRANSPORTATION AUTHORITY
3331 N FIRST STREET
SAN JOSE, CA 95134

DRAINAGE QUANTITIES

DRAINAGE SYSTEM No.	DRAINAGE UNIT	REMOVE CULVERT (LF)	REMOVE INLET (EA)	REMOVE MH (EA)	REMOVE HEADWALL (EA)	REMOVE FES (EA)	REMOVE AUTOMATIC DRAINAGE GATE (EA)	REMOVE CONCRETE (MISCELLANEOUS) (CY)	CAP INLET (EA)	ADJUST INLET (EA)	18" ASP (LF)	12" ALTERNATIVE PIPE CULVERT (LF)	ALTERNATIVE PIPE CULVERT (TYPE A) (LF) 18"	24"	36"	ALTERNATIVE PIPE CULVERT (TYPE B) (LF) 18"	24"	30"	36"	42"	54"	14" x 23" OVAL RCP (CLASS III) (LF)	19" x 30" OVAL RCP (CLASS III) (LF)	18" CSP (LF)	18" AFES (EA)	24" AFES (EA)	30" AFES (EA)	36" AFES (EA)	24" TEE (N) (EA)	PIPE JOINT CLASSIFICATION (N)	MAXIMUM COVER (N) (LF)	DESCRIPTION	STATION	DRAINAGE PLAN No.	DRAINAGE SYSTEM No.	DRAINAGE UNIT
44	a																															G2 DI w/ SGD (In Grade Sag)	1.00′ Rt "C" 197+10.00	D-15	44	a
	b															18													S	3.2	18" APC (B)	1.00′ Rt "C" 197+10.00 TO 1.76′ Rt "C" 197+31.00			b
	c									1																					Adj DI	1.76′ Rt "C" 197+31.00			c
	d	38																													REMOVE Culv	1.76′ Rt "C" 197+31.00 TO 2.05′ Rt "C" 197+69.34			d
	e															66													S	2.9	18" APC (B)	1.76′ Rt "C" 197+31.01 TO 2.33′ Rt "C" 198+00.00			e
	f		1																												REMOVE DI	2.05′ Rt "C" 197+69.34			f
	g																														G2 DI	2.70′ Rt "C" 198+00.00			g
	h	59																													REMOVE Culv	2.05′ Rt "C" 197+69.34 TO 2.00′ Rt "C" 198+30.77			h
	i															47													S	2.8	18" APC (B)	2.33′ Rt "C" 198+00.00 TO 3.29′ Rt "C" 198+50.00			i
	j	59																													REMOVE Culv	2.05′ Rt "C" 197+69.34 TO 2.00′ Rt "C" 198+30.77			j
	k		1																												REMOVE DI	2.00′ Rt "C" 198+30.77			k
	l	24																													REMOVE Culv	2.00′ Rt "C" 198+30.77 TO 3.32′ Rt "C" 198+57.81			l
	m																														G2 DI w/ SGD (On Grade)	3.29′ Rt "C" 198+50.00			m
	n		1																												REMOVE DI	3.32′ Rt "C" 198+57.81	D-16		n
	o	82																													REMOVE Culv	3.32′ Rt "C" 198+57.81 TO 3.87′ Rt "C" 199+42.46			o
	p															47													S	2.3	18" APC (B)	3.29′ Rt "C" 198+50.00 TO 4.66′ Rt "C" 199+00.00			p
	q																														G2 DI w/ SGD (In Grade Sag)	4.66′ Rt "C" 199+00.00			q
	r															40													S	2.2	18" APC (B)	4.66′ Rt "C" 199+00.00 TO 3.87′ Rt "C" 199+42.50			r
	s		1																												REMOVE DI	3.87′ Rt "C" 199+42.46			s
	t																														G2 DI w/ SGD (On Grade)	3.87′ Rt "C" 199+42.50			t
	u	52																													REMOVE Culv	3.87′ Rt "C" 199+42.46 TO 3.87′ Rt "C" 199+97.51			u
	v															52													S	2.1	18" APC (B) w/ Conc Bkf	3.87′ Rt "C" 199+42.50 TO 3.87′ Rt "C" 199+97.46			v
	w		1																												REMOVE DI	3.87′ Rt "C" 199+97.51			w
	x																														G2 DI w/ SGD (On Grade)	3.87′ Rt "C" 199+97.46			x
	y	300																													REMOVE Culv	3.87′ Rt "C" 199+97.46 TO 1.77′ Rt "C" 203+00.00			y
	z															150													S	2.1	18" APC (B) w/ Conc Bkf	1.00′ Rt "C" 201+50.00 TO 3.87′ Rt "C" 199+97.46			z
	aa																														G2 DI	1.00′ Rt "C" 201+50.00			aa
	ab									1																					Adj DI	1.77′ Rt "C" 203+00.00			ab
	ac																														G2 DI w/ SGD (In Grade Sag)	1.00′ Rt "C" 204+00.00			ac
	ad	50																													REMOVE Culv (PORTION)	1.77′ Rt "C" 204+50.00 TO 1.00′ Rt "C" 205+00.00			ad
	ae															97													S	1.8	18" APC (B) w/ Conc Bkf	1.00′ Rt "C" 204+00.00 TO 1.00′ Rt "C" 204+99.55			ae
	af									1																					Adj DI w/ SGD (On Grade)	1.00′ Rt "C" 204+99.55			af
	ag									1																					Adj DI	1.00′ Rt "C" 207+79.29			ag
SHEET TOTAL		664	5							4						517															SHEET TOTAL				

DRAINAGE QUANTITIES DQ-49

CC	05/12/11	CC	12/16/10	CC	06/02/10

REVISED BY / DATE REVISED

CLAIRE COUGHLAN — ANALETTE OCHOA

CALCULATED-DESIGNED BY — CHECKED BY

CONSULTANT FUNCTIONAL SUPERVISOR: HAN-BIN LIANG

STATE OF CALIFORNIA - DEPARTMENT OF TRANSPORTATION

Caltrans

LAST REVISION 05-12-11

DATE PLOTTED => 15-JUL-2011
TIME PLOTTED => 12:46

FOR NOTES AND ABBREVIATIONS, SEE SHEET DQ-1

Dist	COUNTY	ROUTE	POST MILES TOTAL PROJECT	SHEET No.	TOTAL SHEETS
04	SCI	101	48.7/52.0	332	993

REGISTERED CIVIL ENGINEER 05-13-11 DATE

7-11-11
PLANS APPROVAL DATE

REGISTERED PROFESSIONAL ENGINEER ANALETTE OCHOA No. C 55279 Exp. 12/31/12 CIVIL STATE OF CALIFORNIA

THE STATE OF CALIFORNIA OR ITS OFFICERS OR AGENTS SHALL NOT BE RESPONSIBLE FOR THE ACCURACY OR COMPLETENESS OF SCANNED COPIES OF THIS PLAN SHEET.

WRECO
1243 ALPINE ROAD
SUITE 108
WALNUT CREEK, CA 94596

SANTA CLARA VALLEY
TRANSPORTATION AUTHORITY
3331 N FIRST STREET
SAN JOSE, CA 95134

DRAINAGE QUANTITIES

DRAINAGE SYSTEM No.	DRAINAGE UNIT	ROCK SLOPE PROTECTION: BACKING No. 1, METHOD B (CY)	ROCK SLOPE PROTECTION: BACKING No 2, METHOD B (CY)	ROCK SLOPE PROTECTION: LIGHT, METHOD B (CY)	ROCK SLOPE PROTECTION: FABRIC (SQYD)	STRUCTURAL CONCRETE (HEADWALL) (CY)	CONCRETE BACKFILL (FAST SETTING CONCRETE) (CY)	MINOR CONCRETE: BACKFILL (CY)	MINOR CONCRETE: MINOR STRUCTURE (CY)	MINOR CONCRETE: DITCH LINING (CY)	MINOR CONCRETE: GUTTER DEPRESSION (CY)	PLACE HMA (Misc AREA) (SQYD)	MINOR HOT MIX ASPHALT (TON)	DITCH EXCAVATION (CY)	BAR REINFORCING STEEL (HEADWALL) (LB)	Misc IRON AND STEEL (LB)	WELDED WIRE FABRIC (6" x 6", W1.4 x W1.4)(N) (SQYD)	INLET FRAME AND GRATE (N): TYPE 24-12 (EA)	INLET FRAME AND GRATE (N): TYPE 18-9 (EA)	MH COVER (TYPE U45) (N) (EA)	HEIGHT OF INLET/MH (N) (LF)	CONCRETE COLLAR (N) (EA)	IMPORTED BIOFILTRATION SOIL (CY)	CLASS 1 PERMEABLE MATERIAL (CY)	ABANDON CULVERT (EA)	36" AUTOMATIC DRAINAGE GATE (EA)	42" AUTOMATIC DRAINAGE GATE (EA)	18" STEEL FLARED END SECTION (EA)	14"x23" OVAL SHAPED CONCRETE FLARED END SECTION (EA)	19"x30" OVAL SHAPED CONCRETE FLARED END SECTION (EA)	DESCRIPTION	STATION	DRAINAGE PLAN No.	DRAINAGE SYSTEM No.	DRAINAGE UNIT
44	a								1.7		1.5					326		1			4.5										G2 DI w/ SGD (In Grade Sag)	1.00' Rt "C" 197+10.00	D-15	44	a
	b																														18" APC (B)	1.00' Rt "C" 197+10.00 TO 1.76' Rt "C" 197+31.00			b
	c																														Adj DI	1.76' Rt "C" 197+31.00			c
	d																														REMOVE Culv	1.76' Rt "C" 197+31.00 TO 2.05' Rt "C" 197+69.34			d
	e																														18" APC (B)	1.76' Rt "C" 197+31.01 TO 2.33' Rt "C" 198+00.00			e
	f																														REMOVE DI	2.05' Rt "C" 197+69.34			f
	g								1.7							326		1			4.6										G2 DI	2.70' Rt "C" 198+00.00			g
	h																														REMOVE Culv	2.05' Rt "C" 197+69.34 TO 2.00' Rt "C" 198+30.77			h
	i																														18" APC (B)	2.33' Rt "C" 198+00.00 TO 3.29' Rt "C" 198+50.00			i
	j																														REMOVE Culv	2.05' Rt "C" 197+69.34 TO 2.00' Rt "C" 198+30.77			j
	k																														REMOVE DI	2.00' Rt "C" 198+30.77			k
	l																														REMOVE Culv	2.00' Rt "C" 198+30.77 TO 3.32' Rt "C" 198+57.81			l
	m								1.6		1.2					326		1			4.2										G2 DI w/ SGD (On Grade)	3.29' Rt "C" 198+50.00			m
	n																														REMOVE DI	3.32' Rt "C" 198+57.81	D-16		n
	o																														REMOVE Culv	3.32' Rt "C" 198+57.81 TO 3.87' Rt "C" 199+42.46			o
	p																														18" APC (B)	3.29' Rt "C" 198+50.00 TO 4.66' Rt "C" 199+00.00			p
	q								1.6		1.5					326		1			4.1										G2 DI w/ SGD (In Grade Sag)	4.66' Rt "C" 199+00.00			q
	r																														18" APC (B)	4.66' Rt "C" 199+00.00 TO 3.87' Rt "C" 199+42.50			r
	s																														REMOVE DI	3.87' Rt "C" 199+42.46			s
	t								1.5		1.2					326		1			3.9										G2 DI w/ SGD (On Grade)	3.87' Rt "C" 199+42.50			t
	u																														REMOVE Culv	3.87' Rt "C" 199+42.46 TO 3.87' Rt "C" 199+97.51			u
	v							13.3																							18" APC (B) w/ Conc Bkf	3.87' Rt "C" 199+42.50 TO 3.87' Rt "C" 199+97.46			v
	w																														REMOVE DI	3.87' Rt "C" 199+97.51			w
	x								1.5		1.2					326		1			3.7										G2 DI w/ SGD (On Grade)	3.87' Rt "C" 199+97.46			x
	y																														REMOVE Culv	3.87' Rt "C" 199+97.46 TO 1.77' Rt "C" 203+00.00			y
	z							38.3																							18" APC (B) w/ Conc Bkf	1.00' Rt "C" 201+50.00 TO 3.87' Rt "C" 199+97.46			z
	aa								1.5							326		1			3.8										G2 DI	1.00' Rt "C" 201+50.00			aa
	ab																														Adj DI	1.77' Rt "C" 203+00.00			ab
	ac								1.4		1.5					326		1			3.2										G2 DI w/ SGD (In Grade Sag)	1.00' Rt "C" 204+00.00			ac
	ad																														REMOVE Culv (PORTION)	1.77' Rt "C" 204+50.00 TO 1.00' Rt "C" 205+00.00			ad
	ae							24.8																							18" APC (B) w/ Conc Bkf	1.00' Rt "C" 204+00.00 TO 1.00' Rt "C" 204+99.55			ae
	af										1.2																				Adj DI w/ SGD (On Grade)	1.00' Rt "C" 204+99.55			af
	ag																														Adj DI	1.00' Rt "C" 207+79.29			ag
SHEET TOTAL								76.4	12.5		9.0					2608		8													SHEET TOTAL				

DRAINAGE QUANTITIES DQ-50

CC 05/12/11
CC 12/16/10
CC 06/02/10
REVISED BY / DATE REVISED

CLAIRE COUGHLAN — ANALETTE OCHOA — CALCULATED-DESIGNED BY / CHECKED BY

CONSULTANT FUNCTIONAL SUPERVISOR: HAN-BIN LIANG

STATE OF CALIFORNIA - DEPARTMENT OF TRANSPORTATION

Caltrans

LAST REVISION 05-12-11 — DATE PLOTTED => 15-JUL-2011 — TIME PLOTTED => 12:46

FOR NOTES AND ABBREVIATIONS, SEE SHEET DQ-1

Dist	COUNTY	ROUTE	POST MILES TOTAL PROJECT	SHEET No.	TOTAL SHEETS
04	SCI	101	48.7/52.0	333	993

REGISTERED CIVIL ENGINEER 05-13-11 DATE

7-11-11
PLANS APPROVAL DATE

REGISTERED PROFESSIONAL ENGINEER ANALETTE OCHOA No. C 55279 Exp. 12/31/12 CIVIL STATE OF CALIFORNIA

THE STATE OF CALIFORNIA OR ITS OFFICERS OR AGENTS SHALL NOT BE RESPONSIBLE FOR THE ACCURACY OR COMPLETENESS OF SCANNED COPIES OF THIS PLAN SHEET.

WRECO
1243 ALPINE ROAD
SUITE 108
WALNUT CREEK, CA 94596

SANTA CLARA VALLEY TRANSPORTATION AUTHORITY
3331 N FIRST STREET
SAN JOSE, CA 95134

DRAINAGE QUANTITIES

DRAINAGE SYSTEM No. ⬡	DRAINAGE UNIT ◯	REMOVE CULVERT (LF)	REMOVE INLET (EA)	REMOVE MH (EA)	REMOVE HEADWALL (EA)	REMOVE FES (EA)	REMOVE AUTOMATIC DRAINAGE GATE (EA)	REMOVE CONCRETE (MISCELLANEOUS) (CY)	CAP INLET (EA)	ADJUST INLET (EA)	18" ASP (LF)	12" ALTERNATIVE PIPE CULVERT (LF)	ALTERNATIVE PIPE CULVERT (TYPE A) (LF) 18"	24"	36"	ALTERNATIVE PIPE CULVERT (TYPE B) (LF) 18"	24"	30"	36"	42"	54"	14" x 23" OVAL RCP (CLASS III) (LF)	19" x 30" OVAL RCP (CLASS III) (LF)	18" CSP (LF)	18" AFES (EA)	24" AFES (EA)	30" AFES (EA)	36" AFES (EA)	24" TEE (N) (EA)	PIPE JOINT CLASSIFICATION (N)	MAXIMUM COVER (N) (LF)	DESCRIPTION	STATION	DRAINAGE PLAN No.	DRAINAGE SYSTEM No. ⬡	DRAINAGE UNIT ◯
44	ah	3																														REMOVE Culv (PORTION)	1.00′ Rt "C" 208+48.50 TO 1.00′ Rt "C" 208+50.00	D-16	44	ah
	ai																															G2 DI	1.00′ Rt "C" 208+50.00			ai
	aj									1																						Adj DI	1.00′ Rt "C" 209+50.00			aj
45	a																									1						30" AFES	89.73′ Rt "C" 197+46.26	D-15	45	a
	b																	29											S	2.9	30" APC (B)	89.73′ Rt "C" 197+46.26 TO 85.80′ Rt "C" 197+76.84			b
	c																														G2 DI w/ PCC APRON	85.80′ Rt "C" 197+76.84			c
	d					1																									REMOVE FES	85.80′ Rt "C" 197+76.84			d
	e				1																										REMOVE HW	84.73′ Rt "C" 198+94.17	D-16		e
	f																														G2 DI w/ PCC APRON	84.73′ Rt "C" 198+94.17			f
	g																	42											S	2.2	30" APC (B)	84.73′ Rt "C" 198+94.17 TO 87.13′ Rt "C" 199+39.13			g
	h																														G2 DI w/ PCC APRON	87.13′ Rt "C" 199+39.13			h
	i															31													S	2.7	18" APC (B)	87.13′ Rt "C" 199+39.13 TO 95.69′ Rt "C" 199+69.63			i
	j																								1						18" AFES	95.69′ Rt "C" 199+69.63			j
	k																														RSP (BACKING No. 2, METHOD B)	85.65′ Rt "C" 199+39.14			k
	l																														BIOFILTRATION SWALE	96.01′ Rt "C" 199+50.00 TO 95.77′ Rt "C" 200+83.31			l
	m																														RSP (BACKING No. 2, METHOD B)	93.02′ Rt "C" 201+00.00			m
	n																									1					30" AFES	95.93′ Rt "C" 200+83.31			n
	o																	147											S	3.2	30" APC (B)	95.93′ Rt "C" 200+83.31 TO 8.64′ Lt "OMSN" 202+25.54			o
	p																														G2 MH	8.64′ Lt "OMSN" 202+25.54			p
	q				1																										REMOVE HW	90.62′ Rt "C" 202+136.88			q
	r		1																												REMOVE DI	24.66′ Rt "OMSN" 202+26.76			r
	s																														G2 DI	27.60′ Rt "OMSN" 202+26.76			s
	t																					63							S	1.8	14"x23" OVAL RCP w/ Conc Bkf	30.00′ Rt "OMSN" 201+60.00 TO 27.60′ Rt "OMSN" 202+26.76			t
	u																														G2 DI w/ SGD (In Grade Sag)	30.00′ Rt "OMSN" 201+60.00			u
	v																					45							S	1.6	14"x23" OVAL RCP w/ Conc Bkf	30.00′ Rt "OMSN" 201+10.00 TO 30.00′ Rt "OMSN" 201+60.00			v
	w																														G2 DI	30.00′ Rt "OMSN" 201+10.00			w
	x	144																													REMOVE Culv	38.07′ Rt "OMSN" 200+60.00 TO 24.66′ Rt "OMSN" 202+26.76			x
	y		1																												REMOVE DI	38.07′ Rt "OMSN" 200+60.00			y
	z									1																					Adj DI	29.68′ Rt "OMSN" 203+45.00			z
	aa									1																					Adj DI	96.26′ Rt "C" 206+41.00			aa
	ab									1																					Adj DI	99.87′ Rt "C" 207+80.00			ab
SHEET TOTAL		147	2		2	1				4						31		218				108			1		2				SHEET TOTAL				

DRAINAGE QUANTITIES DQ-51

REVISED BY	DATE REVISED
CC	05/12/11
CC	12/16/10
CC	06/02/10

CALCULATED-DESIGNED BY: CLAIRE COUGHLAN
CHECKED BY: ANALETTE OCHOA
CONSULTANT FUNCTIONAL SUPERVISOR: HAN-BIN LIANG

STATE OF CALIFORNIA - DEPARTMENT OF TRANSPORTATION
Caltrans

LAST REVISION 05-12-11
DATE PLOTTED => 15-JUL-2011
TIME PLOTTED => 12:46

FOR NOTES AND ABBREVIATIONS, SEE SHEET DQ-1

Dist	COUNTY	ROUTE	POST MILES TOTAL PROJECT	SHEET No.	TOTAL SHEETS
04	SCI	101	48.7/52.0	334	993

REGISTERED CIVIL ENGINEER 05-13-11 DATE

7-11-11
PLANS APPROVAL DATE

REGISTERED PROFESSIONAL ENGINEER ANALETTE OCHOA No. C 55279 Exp. 12/31/12 CIVIL STATE OF CALIFORNIA

THE STATE OF CALIFORNIA OR ITS OFFICERS OR AGENTS SHALL NOT BE RESPONSIBLE FOR THE ACCURACY OR COMPLETENESS OF SCANNED COPIES OF THIS PLAN SHEET.

WRECO
1243 ALPINE ROAD
SUITE 108
WALNUT CREEK, CA 94596

SANTA CLARA VALLEY TRANSPORTATION AUTHORITY
3331 N FIRST STREET
SAN JOSE, CA 95134

DRAINAGE QUANTITIES

DRAINAGE SYSTEM No.	DRAINAGE UNIT	ROCK SLOPE PROTECTION: BACKING No. 1, METHOD B (CY)	ROCK SLOPE PROTECTION: BACKING No 2, METHOD B (CY)	ROCK SLOPE PROTECTION: LIGHT, METHOD B (CY)	ROCK SLOPE PROTECTION: FABRIC (SQYD)	STRUCTURAL CONCRETE (HEADWALL) (CY)	CONCRETE BACKFILL (FAST SETTING CONCRETE) (CY)	MINOR CONCRETE: BACKFILL (CY)	MINOR CONCRETE: MINOR STRUCTURE (CY)	MINOR CONCRETE: DITCH LINING (CY)	MINOR CONCRETE: GUTTER DEPRESSION (CY)	PLACE HMA (Misc AREA) (SQYD)	MINOR HOT MIX ASPHALT (TON)	DITCH EXCAVATION (CY)	BAR REINFORCING STEEL (HEADWALL) (LB)	Misc IRON AND STEEL (LB)	WELDED WIRE FABRIC (6" x 6", W1.4 x W1.4)(N) (SQYD)	INLET FRAME AND GRATE (N): TYPE 24-12 (EA)	INLET FRAME AND GRATE (N): TYPE 18-9 (EA)	MH COVER (TYPE U45) (N) (EA)	HEIGHT OF INLET/MH (N) (LF)	CONCRETE COLLAR (N) (EA)	IMPORTED BIOFILTRATION SOIL (CY)	CLASS 1 PERMEABLE MATERIAL (CY)	ABANDON CULVERT (EA)	36" AUTOMATIC DRAINAGE GATE (EA)	42" AUTOMATIC DRAINAGE GATE (EA)	18" STEEL FLARED END SECTION (EA)	14"x23" OVAL SHAPED CONCRETE FLARED END SECTION (EA)	19"x30" OVAL SHAPED CONCRETE FLARED END SECTION (EA)	DESCRIPTION	STATION	DRAINAGE PLAN No.	DRAINAGE SYSTEM No.	DRAINAGE UNIT
44	ah																														REMOVE Culv (PORTION)	1.00′ Rt "C" 208+48.50 TO 1.00′ Rt "C" 208+50.00	D-16	44	ah
	ai								1.5							326		1			3.9										G2 DI	1.00′ Rt "C" 208+50.00			ai
	aj																														Adj DI	1.00′ Rt "C" 209+50.00			aj
45	a																														30" AFES	89.73′ Rt "C" 197+46.26	D-15	45	a
	b																														30" APC (B)	89.73′ Rt "C" 197+46.26 TO 85.80′ Rt "C" 197+76.84			b
	c								2.0		0.4					326	4.2	1			5.5										G2 DI w/ PCC APRON	85.80′ Rt "C" 197+76.84			c
	d																														REMOVE FES	85.80′ Rt "C" 197+76.84			d
	e																														REMOVE HW	84.73′ Rt "C" 198+94.17	D-16		e
	f								1.8		0.4					326	4.2	1			4.8										G2 DI w/ PCC APRON	84.73′ Rt "C" 198+94.17			f
	g							16.6																							30" APC (B)	84.73′ Rt "C" 198+94.17 TO 87.13′ Rt "C" 199+39.13			g
	h								1.7		0.4					326	4.2	1			4.7										G2 DI w/ PCC APRON	87.13′ Rt "C" 199+39.13			h
	i																														18" APC (B)	87.13′ Rt "C" 199+39.13 TO 95.69′ Rt "C" 199+69.63			i
	j																														18" AFES	95.69′ Rt "C" 199+69.63			j
	k		11.9		30.0																										RSP (BACKING No. 2, METHOD B)	85.65′ Rt "C" 199+39.14			k
	l													39.3									73.6								BIOFILTRATION SWALE	96.01′ Rt "C" 199+50.00 TO 95.77′ Rt "C" 200+83.31			l
	m		7.8		27.0																										RSP (BACKING No. 2, METHOD B)	93.02′ Rt "C" 201+00.00			m
	n																														30" AFES	95.93′ Rt "C" 200+83.31			n
	o																														30" APC (B)	95.93′ Rt "C" 200+83.31 TO 8.64′ Lt "OMSN" 202+25.54			o
	p								2.1							435				1	5.9										G2 MH	8.64′ Lt "OMSN" 202+25.54			p
	q																														REMOVE HW	90.62′ Rt "C" 202+136.88			q
	r																														REMOVE DI	24.66′ Rt "OMSN" 202+26.76			r
	s								1.3							326		1			3.0										G2 DI	27.60′ Rt "OMSN" 202+26.76			s
	t							15.0																							14"x23" OVAL RCP w/ Conc Bkf	30.00′ Rt "OMSN" 201+60.00 TO 27.60′ Rt "OMSN" 202+26.76			t
	u								1.2		1.5					326		1			2.4										G2 DI w/ SGD (In Grade Sag)	30.00′ Rt "OMSN" 201+60.00			u
	v							10.7																							14"x23" OVAL RCP w/ Conc Bkf	30.00′ Rt "OMSN" 201+10.00 TO 30.00′ Rt "OMSN" 201+60.00			v
	w								1.3							326		1			2.8										G2 DI	30.00′ Rt "OMSN" 201+10.00			w
	x																														REMOVE Culv	38.07′ Rt "OMSN" 200+60.00 TO 24.66′ Rt "OMSN" 202+26.76			x
	y																														REMOVE DI	38.07′ Rt "OMSN" 200+60.00			y
	z																														Adj DI	29.68′ Rt "OMSN" 203+45.00			z
	aa																														Adj DI	96.26′ Rt "C" 206+41.00			aa
	ab																														Adj DI	99.87′ Rt "C" 207+80.00			ab
SHEET TOTAL			19.7		57.0			42.3	12.7		2.7			39.3		2717	12.5	7		1			73.6								SHEET TOTAL				

DRAINAGE QUANTITIES DQ-52

REVISED BY	DATE REVISED
CC	05/12/11
CC	12/16/10
CC	06/02/10

CALCULATED-DESIGNED BY: CLAIRE COUGHLAN
CHECKED BY: ANALETTE OCHOA
CONSULTANT FUNCTIONAL SUPERVISOR: HAN-BIN LIANG
STATE OF CALIFORNIA - DEPARTMENT OF TRANSPORTATION
Caltrans

LAST REVISION 05-12-11
DATE PLOTTED => 15-JUL-2011
TIME PLOTTED => 12:46

FOR NOTES AND ABBREVIATIONS, SEE SHEET DQ-1

Dist	COUNTY	ROUTE	POST MILES TOTAL PROJECT	SHEET No.	TOTAL SHEETS
04	SCI	101	48.7/52.0	335	993

REGISTERED CIVIL ENGINEER 05-13-11 DATE

7-11-11
PLANS APPROVAL DATE

REGISTERED PROFESSIONAL ENGINEER ANALETTE OCHOA No. C 55279 Exp. 12/31/12 CIVIL STATE OF CALIFORNIA

THE STATE OF CALIFORNIA OR ITS OFFICERS OR AGENTS SHALL NOT BE RESPONSIBLE FOR THE ACCURACY OR COMPLETENESS OF SCANNED COPIES OF THIS PLAN SHEET.

WRECO
1243 ALPINE ROAD
SUITE 108
WALNUT CREEK, CA 94596

SANTA CLARA VALLEY TRANSPORTATION AUTHORITY
3331 N FIRST STREET
SAN JOSE, CA 95134

DRAINAGE QUANTITIES

DRAINAGE SYSTEM No. ⬡	DRAINAGE UNIT ◯	REMOVE CULVERT (LF)	REMOVE INLET (EA)	REMOVE MH (EA)	REMOVE HEADWALL (EA)	REMOVE FES (EA)	REMOVE AUTOMATIC DRAINAGE GATE (EA)	REMOVE CONCRETE (MISCELLANEOUS) (CY)	CAP INLET (EA)	ADJUST INLET (EA)	18" ASP (LF)	12" ALTERNATIVE PIPE CULVERT (LF)	ALTERNATIVE PIPE CULVERT (TYPE A) (LF) 18"	24"	36"	ALTERNATIVE PIPE CULVERT (TYPE B) (LF) 18"	24"	30"	36"	42"	54"	14" x 23" OVAL RCP (CLASS III) (LF)	19" x 30" OVAL RCP (CLASS III) (LF)	18" CSP (LF)	18" AFES (EA)	24" AFES (EA)	30" AFES (EA)	36" AFES (EA)	24" TEE (N) (EA)	PIPE JOINT CLASSIFICATION (N)	MAXIMUM COVER (N) (LF)	DESCRIPTION	STATION	DRAINAGE PLAN No.	DRAINAGE SYSTEM No. ⬡	DRAINAGE UNIT ◯
46	a									1																						Adj DI	21.97′ Rt "SHSF" 212+31.87	D-17	46	a
	b												89																S	2.1	18" APC (A) w/ Conc Bkf	21.97′ Rt "SHSF" 212+31.87 TO 24.33′ Rt "SHSF" 213+23.31			b
	c	90																													REMOVE Culv	21.97′ Rt "SHSF" 212+31.87 TO 24.01′ Rt "SHSF" 213+23.49			c
	d																														G2 DI	24.33′ Rt "SHSF" 213+23.31			d
	e									1																					Adj DI	91.63′ Rt "C" 214+15.82			e
	f															73													S	1.9	18" APC (B) w/ Conc Bkf	84.00′ Rt "C" 213+48.00 TO 91.63′ Rt "C" 214+15.82			f
	g																														G2 DI	84.00′ Rt "C" 213+48.00			g
	h										84																		S		18" ASP	81.00′ Rt "C" 212+55.00 TO 84.00′ Rt "C" 213+48.00			h
47	a																														G2 DI	24.22′ Rt "SHSF" 214+15.00	D-17	47	a
	b															43													S	1.2	18" APC (B) w/ Conc Bkf	24.22′ Rt "SHSF" 214+15.00 TO 23.04′ Rt "SHSF" 214+65.00			b
	c																														G2 DI w/ SGD (In Grade Sag)	23.04′ Rt "SHSF" 214+65.00			c
	d															10													S	1.4	18" APC (B) w/ Conc Bkf	23.04′ Rt "SHSF" 214+65.00 TO 21.83′ Rt "SHSF" 214+79.95			d
	e									1																					Adj DI	21.83′ Rt "SHSF" 214+79.95			e
	f												30																S	1.6	18" APC (A) w/ Conc Bkf	21.83′ Rt "SHSF" 214+79.95 TO 21.67′ Rt "SHSF" 215+15.00			f
	g																														G2 DI	21.67′ Rt "SHSF" 215+15.00			g
48	a										218																				18" ASP w/ End Cap	68.00′ Rt "C" 35+30.29 TO 69.00′ Rt "C" 37+50.00	D-1	48	a
	b																														G2 DI w/ SGD (On Grade)	69.00′ Rt "C" 37+50.00			b
	c															87													S	2.0	18" APC (B) w/ Conc Bkf	69.00′ Rt "C" 37+50.00 TO 69.00′ Rt "C" 38+40.00			c
	d																														G2 DI w/ SGD (On Grade)	69.00′ Rt "C" 38+40.00			d
	e															57													S	2.0	18" APC (B) w/ Conc Bkf	69.00′ Rt "C" 38+40.00 TO 71.65′ Rt "C" 39+00.00			e
	f																														G2 DI w/ SGD (In Grade Sag)	71.65′ Rt "C" 39+00.00			f
	g															147													S	1.7	18" APC (B) w/ Conc Bkf	71.65′ Rt "C" 39+00.00 TO 71.97′ Rt "C" 39+50.00			g
	h																														G2 DI w/ SGD (On Grade)	71.97′ Rt "C" 39+50.00			h
	i																					297							S	1.3	14"x23" OVAL RCP w/ Conc Bkf	71.97′ Rt "C" 39+50.00 TO 69.00′ Rt "C" 42+50.00			i
	j																														G2 DI w/ SGD (On Grade)	69.00′ Rt "C" 42+50.00			j
	k										97																		S		18" ASP	69.00′ Rt "C" 42+50.00 TO 69.00′ Rt "C" 43+50.00			k
	l																														G4 DI Cleanout	69.00′ Rt "C" 43+50.00			l
	m															4													S	4.7	18" APC (B)	69.00′ Rt "C" 38+40.00 TO 7.23′ Lt "ESN" 38+40.00			m
	n																														G2 DI	7.23′ Lt "ESN" 38+40.00			n
	o															42													S	4.7	18" APC (B)	7.23′ Lt "ESN" 38+40.00 TO 36.91′ Rt "ESN" 38+42.80			o
	p																														18" PIPE Culv STRAIGHT HW	36.91′ Rt "ESN" 38+42.80			p
SHEET TOTAL		90								3	399		119			463						297									SHEET TOTAL				

DRAINAGE QUANTITIES DQ-53

REVISED BY	DATE REVISED
CC	05/12/11
CC	12/16/10
CC	06/02/10

CALCULATED-DESIGNED BY: CLAIRE COUGHLAN
CHECKED BY: ANALETTE OCHOA
CONSULTANT FUNCTIONAL SUPERVISOR: HAN-BIN LIANG

STATE OF CALIFORNIA - DEPARTMENT OF TRANSPORTATION
Caltrans

LAST REVISION 05-12-11
DATE PLOTTED => 15-JUL-2011
TIME PLOTTED => 12:46

FOR NOTES AND ABBREVIATIONS, SEE SHEET DQ-1

Dist	COUNTY	ROUTE	POST MILES TOTAL PROJECT	SHEET No.	TOTAL SHEETS
04	SCI	101	48.7/52.0	336	993

REGISTERED CIVIL ENGINEER 05-13-11 DATE

7-11-11
PLANS APPROVAL DATE

REGISTERED PROFESSIONAL ENGINEER ANALETTE OCHOA No. C 55279 Exp. 12/31/12 CIVIL STATE OF CALIFORNIA

THE STATE OF CALIFORNIA OR ITS OFFICERS OR AGENTS SHALL NOT BE RESPONSIBLE FOR THE ACCURACY OR COMPLETENESS OF SCANNED COPIES OF THIS PLAN SHEET.

WRECO
1243 ALPINE ROAD
SUITE 108
WALNUT CREEK, CA 94596

SANTA CLARA VALLEY TRANSPORTATION AUTHORITY
3331 N FIRST STREET
SAN JOSE, CA 95134

DRAINAGE QUANTITIES

DRAINAGE SYSTEM No.	DRAINAGE UNIT	ROCK SLOPE PROTECTION: BACKING No. 1, METHOD B (CY)	ROCK SLOPE PROTECTION: BACKING No 2, METHOD B (CY)	ROCK SLOPE PROTECTION: LIGHT, METHOD B (CY)	ROCK SLOPE PROTECTION: FABRIC (SQYD)	STRUCTURAL CONCRETE (HEADWALL) (CY)	CONCRETE BACKFILL (FAST SETTING CONCRETE) (CY)	MINOR CONCRETE: BACKFILL (CY)	MINOR CONCRETE: MINOR STRUCTURE (CY)	MINOR CONCRETE: DITCH LINING (CY)	MINOR CONCRETE: GUTTER DEPRESSION (CY)	PLACE HMA (Misc AREA) (SQYD)	MINOR HOT MIX ASPHALT (TON)	DITCH EXCAVATION (CY)	BAR REINFORCING STEEL (HEADWALL) (LB)	Misc IRON AND STEEL (LB)	WELDED WIRE FABRIC (6" x 6", W1.4 x W1.4)(N) (SQYD)	INLET FRAME AND GRATE (N): TYPE 24-12 (EA)	INLET FRAME AND GRATE (N): TYPE 18-9 (EA)	MH COVER (TYPE U45) (N) (EA)	HEIGHT OF INLET/MH (N) (LF)	CONCRETE COLLAR (N) (EA)	IMPORTED BIOFILTRATION SOIL (CY)	CLASS 1 PERMEABLE MATERIAL (CY)	ABANDON CULVERT (EA)	36" AUTOMATIC DRAINAGE GATE (EA)	42" AUTOMATIC DRAINAGE GATE (EA)	18" STEEL FLARED END SECTION (EA)	14"x23" OVAL SHAPED CONCRETE FLARED END SECTION (EA)	19"x30" OVAL SHAPED CONCRETE FLARED END SECTION (EA)	DESCRIPTION	STATION	DRAINAGE PLAN No.	DRAINAGE SYSTEM No.	DRAINAGE UNIT
46	a																														Adj DI	21.97′ Rt "SHSF" 212+31.87	D-17	46	a
	b							22.7																							18" APC (A) w/ Conc Bkf	21.97′ Rt "SHSF" 212+31.87 TO 24.33′ Rt "SHSF" 213+23.31			b
	c																														REMOVE Culv	21.97′ Rt "SHSF" 212+31.87 TO 24.01′ Rt "SHSF" 213+23.49			c
	d								1.2							326		1			2.8										G2 DI	24.33′ Rt "SHSF" 213+23.31			d
	e																														Adj DI	91.63′ Rt "C" 214+15.82			e
	f							18.6																							18" APC (B) w/ Conc Bkf	84.00′ Rt "C" 213+48.00 TO 91.63′ Rt "C" 214+15.82			f
	g								1.3							326		1			3.1										G2 DI	84.00′ Rt "C" 213+48.00			g
	h																														18" ASP	81.00′ Rt "C" 212+55.00 TO 84.00′ Rt "C" 213+48.00			h
47	a								1.2							326		1			2.7										G2 DI	24.22′ Rt "SHSF" 214+15.00	D-17	47	a
	b							11.0																							18" APC (B) w/ Conc Bkf	24.22′ Rt "SHSF" 214+15.00 TO 23.04′ Rt "SHSF" 214+65.00			b
	c								1.2	1.5						326		1			2.7										G2 DI w/ SGD (In Grade Sag)	23.04′ Rt "SHSF" 214+65.00			c
	d							2.6																							18" APC (B) w/ Conc Bkf	23.04′ Rt "SHSF" 214+65.00 TO 21.83′ Rt "SHSF" 214+79.95			d
	e																														Adj DI	21.83′ Rt "SHSF" 214+79.95			e
	f							7.7																							18" APC (A) w/ Conc Bkf	21.83′ Rt "SHSF" 214+79.95 TO 21.67′ Rt "SHSF" 215+15.00			f
	g								1.3							326		1			3.1										G2 DI	21.67′ Rt "SHSF" 215+15.00			g
48	a																														18" ASP w/ End Cap	68.00′ Rt "C" 35+30.29 TO 69.00′ Rt "C" 37+50.00	D-1	48	a
	b								1.4	1.2						326		1			3.4										G2 DI w/ SGD (On Grade)	69.00′ Rt "C" 37+50.00			b
	c							22.2																							18" APC (B) w/ Conc Bkf	69.00′ Rt "C" 37+50.00 TO 69.00′ Rt "C" 38+40.00			c
	d								1.4	1.2						326		1			3.5										G2 DI w/ SGD (On Grade)	69.00′ Rt "C" 38+40.00			d
	e							14.6																							18" APC (B) w/ Conc Bkf	69.00′ Rt "C" 38+40.00 TO 71.65′ Rt "C" 39+00.00			e
	f								1.4	1.5						326		1			3.2										G2 DI w/ SGD (In Grade Sag)	71.65′ Rt "C" 39+00.00			f
	g							37.6																							18" APC (B) w/ Conc Bkf	71.65′ Rt "C" 39+00.00 TO 71.97′ Rt "C" 39+50.00			g
	h								1.3	1.2						326		1			2.8										G2 DI w/ SGD (On Grade)	71.97′ Rt "C" 39+50.00			h
	i							70.8																							14"x23" OVAL RCP w/ Conc Bkf	71.97′ Rt "C" 39+50.00 TO 69.00′ Rt "C" 42+50.00			i
	j								1.2	1.2						326		1			2.5										G2 DI w/ SGD (On Grade)	69.00′ Rt "C" 42+50.00			j
	k																														18" ASP	69.00′ Rt "C" 42+50.00 TO 69.00′ Rt "C" 43+50.00			k
	l								0.9							249			1		1.5										G4 DI Cleanout	69.00′ Rt "C" 43+50.00			l
	m							1.0																							18" APC (B)	69.00′ Rt "C" 38+40.00 TO 7.23′ Lt "ESN" 38+40.00			m
	n								2.1							326		1			6.2										G2 DI	7.23′ Lt "ESN" 38+40.00			n
	o							10.7																							18" APC (B)	7.23′ Lt "ESN" 38+40.00 TO 36.91′ Rt "ESN" 38+42.80			o
	p					0.9									50																18" PIPE Culv STRAIGHT HW	36.91′ Rt "ESN" 38+42.80			p
SHEET TOTAL						0.9		219.5	16.0		7.5				50	3835		11	1												SHEET TOTAL				

DRAINAGE QUANTITIES DQ-54

CC	05/12/11
CC	12/16/10
CC	06/02/10
REVISED BY	DATE REVISED
CLAIRE COUGHLAN	ANALETTE OCHOA
CALCULATED-DESIGNED BY	CHECKED BY
CONSULTANT FUNCTIONAL SUPERVISOR	HAN-BIN LIANG

STATE OF CALIFORNIA - DEPARTMENT OF TRANSPORTATION

Caltrans

LAST REVISION 05-12-11 | DATE PLOTTED => 15-JUL-2011 | TIME PLOTTED => 12:46

FOR NOTES AND ABBREVIATIONS, SEE SHEET DQ-1

Dist	COUNTY	ROUTE	POST MILES TOTAL PROJECT	SHEET No.	TOTAL SHEETS
04	SCI	101	48.7/52.0	337	993

REGISTERED CIVIL ENGINEER 05-13-11 DATE

7-11-11
PLANS APPROVAL DATE

REGISTERED PROFESSIONAL ENGINEER ANALETTE OCHOA No. C 55279 Exp. 12/31/12 CIVIL STATE OF CALIFORNIA

THE STATE OF CALIFORNIA OR ITS OFFICERS OR AGENTS SHALL NOT BE RESPONSIBLE FOR THE ACCURACY OR COMPLETENESS OF SCANNED COPIES OF THIS PLAN SHEET.

WRECO
1243 ALPINE ROAD
SUITE 108
WALNUT CREEK, CA 94596

SANTA CLARA VALLEY
TRANSPORTATION AUTHORITY
3331 N FIRST STREET
SAN JOSE, CA 95134

DRAINAGE QUANTITIES

DRAINAGE SYSTEM No.	DRAINAGE UNIT	REMOVE CULVERT (LF)	REMOVE INLET (EA)	REMOVE MH (EA)	REMOVE HEADWALL (EA)	REMOVE FES (EA)	REMOVE AUTOMATIC DRAINAGE GATE (EA)	REMOVE CONCRETE (MISCELLANEOUS) (CY)	CAP INLET (EA)	ADJUST INLET (EA)	18" ASP (LF)	12" ALTERNATIVE PIPE CULVERT (LF)	ALTERNATIVE PIPE CULVERT (TYPE A) (LF) 18"	24"	36"	ALTERNATIVE PIPE CULVERT (TYPE B) (LF) 18"	24"	30"	36"	42"	54"	14" x 23" OVAL RCP (CLASS III) (LF)	19" x 30" OVAL RCP (CLASS III) (LF)	18" CSP (LF)	18" AFES (EA)	24" AFES (EA)	30" AFES (EA)	36" AFES (EA)	24" TEE (N) (EA)	PIPE JOINT CLASSIFICATION (N)	MAXIMUM COVER (N) (LF)	DESCRIPTION	STATION	DRAINAGE PLAN No.	DRAINAGE SYSTEM No.	DRAINAGE UNIT
48	q																															RSP (BACKING No. 2, METHOD B)	36.91′ Rt "ESN" 38+42.80	D-1	48	q
	r															157													S	4.7	18" APC (B)	7.23′ Lt "ESN" 38+40.00 TO 4.65′ Lt "ESN" 40+00.00			r
	s																														G2 DI w/ SGD (On Grade)	4.65′ Lt "ESN" 40+00.00			s
	t															47													S	2.2	18" APC (B) w/ Conc Bkf	4.65′ Lt "ESN" 40+00.00 TO 5.00′ Lt "ESN" 40+50.00			t
	u																														G2 DI w/ SGD (In Grade Sag)	5.00′ Lt "ESN" 40+50.00			u
	v										274																				18" ASP w/ End Cap	5.00′ Lt "ESN" 40+50.00 TO 4.00′ Lt "ESN" 43+25.00			v
	w		1																												REMOVE DI	72.31′ Rt "C" 38+48.76			w
	x	45																													REMOVE Culv	72.31′ Rt "C" 38+48.76 TO 36.24′ Rt "ESN" 43+48.97	D-1		x
	y				1																										REMOVE HW	36.24′ Rt "ESN" 38+48.97			y
49	a																														G2 DI w/ SGD (In Grade Sag)	71.49′ Lt "C" 38+17.45	D-1	49	a
	b																					80							S	1.2	14"x23" OVAL RCP w/ Conc Bkf	71.49′ Lt "C" 38+17.45 TO 71.14′ Lt "C" 39+00.00			b
	c																														G2 DI w/ SGD (On Grade)	71.14′ Lt "C" 39+00.00			c
	d															47													S	1.2	18" APC (B) w/ Conc Bkf	71.14′ Lt "C" 39+00.00 TO 72.03′ Lt "C" 39+50.00			d
	e																														G2 DI w/ SGD (In Grade Sag)	72.03′ Lt "C" 39+50.00			e
	f															47													S	1.4	18" APC (B) w/ Conc Bkf	72.03′ Lt "C" 39+50.00 TO 72.10′ Lt "C" 40+00.00			f
	g																														G2 DI w/ SGD (On Grade)	72.10′ Lt "C" 40+00.00			g
	h															122													S	2.0	18" APC (B) w/ Conc Bkf	72.10′ Lt "C" 40+00.00 TO 69.00′ Lt "C" 41+25.42			h
	i																														G2 DI w/ SGD (On Grade)	69.00′ Lt "C" 41+25.42			i
	j										99																				18" ASP w/ End Cap	69.00′ Lt "C" 41+25.42 TO 68.00′ Lt "C" 42+25.00			j
	k															6													S	2.7	18" APC (B)	69.00′ Lt "C" 41+25.42 TO 5.00′ Rt "ENF" 41+24.00			k
	l		1																												REMOVE DI	9.82′ Rt "ENF" 41+23.56			l
	m	5																													REMOVE Culv (PORTION)	9.82′ Rt "ENF" 41+23.56 TO 3.05′ Rt "ENF" 41+23.99			m
	n																														G2 DI w/ SGD (On Grade)	5.00′ Rt "ENF" 41+24.00			n
	o															71													S	2.7	18" APC (B)	5.00′ Rt "ENF" 41+24.00 TO 5.00′ Rt "ENF" 40+50.00			o
	p																														G2 DI w/ SGD (In Grade Sag)	5.00′ Rt "ENF" 40+50.00			p
	q															47													S	2.3	18" APC (B)	5.00′ Rt "ENF" 40+50.00 TO 4.42′ Rt "ENF" 40+00.00			q
	r																														G2 DI	4.42′ Rt "ENF" 40+00.00			r
	s										225																				18" ASP w/ End Cap	5.00′ Rt "ENF" 41+24.00 TO 4.00′ Rt "ENF" 43+50.00			s
SHEET TOTAL		50	2		1						598					544						80										SHEET TOTAL				

DRAINAGE QUANTITIES DQ-55

STATE OF CALIFORNIA - DEPARTMENT OF TRANSPORTATION
Caltrans

CONSULTANT FUNCTIONAL SUPERVISOR: HAN-BIN LIANG

CALCULATED-DESIGNED BY: CLAIRE COUGHLAN
CHECKED BY: ANALETTE OCHOA

REVISED BY / DATE REVISED:
CC 06/02/10
CC 12/16/10
CC 05/12/11

LAST REVISION 05-12-11
DATE PLOTTED => 15-JUL-2011
TIME PLOTTED => 12:46

FOR NOTES AND ABBREVIATIONS, SEE SHEET DQ-1

Dist	COUNTY	ROUTE	POST MILES TOTAL PROJECT	SHEET No.	TOTAL SHEETS
04	SCI	101	48.7/52.0	338	993

REGISTERED CIVIL ENGINEER 05-13-11 DATE

7-11-11
PLANS APPROVAL DATE

REGISTERED PROFESSIONAL ENGINEER ANALETTE OCHOA No. C 55279 Exp. 12/31/12 CIVIL STATE OF CALIFORNIA

THE STATE OF CALIFORNIA OR ITS OFFICERS OR AGENTS SHALL NOT BE RESPONSIBLE FOR THE ACCURACY OR COMPLETENESS OF SCANNED COPIES OF THIS PLAN SHEET.

WRECO
1243 ALPINE ROAD
SUITE 108
WALNUT CREEK, CA 94596

SANTA CLARA VALLEY TRANSPORTATION AUTHORITY
3331 N FIRST STREET
SAN JOSE, CA 95134

DRAINAGE QUANTITIES

DRAINAGE SYSTEM No.	DRAINAGE UNIT	ROCK SLOPE PROTECTION: BACKING No. 1, METHOD B (CY)	ROCK SLOPE PROTECTION: BACKING No 2, METHOD B (CY)	ROCK SLOPE PROTECTION: LIGHT, METHOD B (CY)	ROCK SLOPE PROTECTION: FABRIC (SQYD)	STRUCTURAL CONCRETE (HEADWALL) (CY)	CONCRETE BACKFILL (FAST SETTING CONCRETE) (CY)	MINOR CONCRETE: BACKFILL (CY)	MINOR CONCRETE: MINOR STRUCTURE (CY)	MINOR CONCRETE: DITCH LINING (CY)	MINOR CONCRETE: GUTTER DEPRESSION (CY)	PLACE HMA (Misc AREA) (SQYD)	MINOR HOT MIX ASPHALT (TON)	DITCH EXCAVATION (CY)	BAR REINFORCING STEEL (HEADWALL) (LB)	Misc IRON AND STEEL (LB)	WELDED WIRE FABRIC (6" x 6", W1.4 x W1.4)(N) (SQYD)	INLET FRAME AND GRATE (N): TYPE 24-12 (EA)	INLET FRAME AND GRATE (N): TYPE 18-9 (EA)	MH COVER (TYPE U45) (N) (EA)	HEIGHT OF INLET/MH (N) (LF)	CONCRETE COLLAR (N) (EA)	IMPORTED BIOFILTRATION SOIL (CY)	CLASS 1 PERMEABLE MATERIAL (CY)	ABANDON CULVERT (EA)	36" AUTOMATIC DRAINAGE GATE (EA)	42" AUTOMATIC DRAINAGE GATE (EA)	18" STEEL FLARED END SECTION (EA)	14"x23" OVAL SHAPED CONCRETE FLARED END SECTION (EA)	19"x30" OVAL SHAPED CONCRETE FLARED END SECTION (EA)	DESCRIPTION	STATION	DRAINAGE PLAN No.	DRAINAGE SYSTEM No.	DRAINAGE UNIT
48	q		2.6		10.0																									RSP (BACKING No. 2, METHOD B)	36.91′ Rt "ESN" 38+42.80	D-1	48	q
	r																													18" APC (B)	7.23′ Lt "ESN" 38+40.00 TO 4.65′ Lt "ESN" 40+00.00			r
	s								1.5		1.2					326		1			3.7									G2 DI w/ SGD (On Grade)	4.65′ Lt "ESN" 40+00.00			s
	t							12.0																						18" APC (B) w/ Conc Bkf	4.65′ Lt "ESN" 40+00.00 TO 5.00′ Lt "ESN" 40+50.00			t
	u								1.4		1.5					326		1			3.4									G2 DI w/ SGD (In Grade Sag)	5.00′ Lt "ESN" 40+50.00			u
	v																													18" ASP w/ End Cap	5.00′ Lt "ESN" 40+50.00 TO 4.00′ Lt "ESN" 43+25.00			v
	w																													REMOVE DI	72.31′ Rt "C" 38+48.76			w
	x																													REMOVE Culv	72.31′ Rt "C" 38+48.76 TO 36.24′ Rt "ESN" 43+48.97	D-1		x
	y																													REMOVE HW	36.24′ Rt "ESN" 38+48.97			y
49	a								1.1		1.5					326		1			2.4									G2 DI w/ SGD (In Grade Sag)	71.49′ Lt "C" 38+17.45	D-1	49	a
	b							19.1																						14"x23" OVAL RCP w/ Conc Bkf	71.49′ Lt "C" 38+17.45 TO 71.14′ Lt "C" 39+00.00			b
	c								1.2		1.2					326		1			2.6									G2 DI w/ SGD (On Grade)	71.14′ Lt "C" 39+00.00			c
	d							12.0																						18" APC (B) w/ Conc Bkf	71.14′ Lt "C" 39+00.00 TO 72.03′ Lt "C" 39+50.00			d
	e								1.2		1.5					326		1			2.7									G2 DI w/ SGD (In Grade Sag)	72.03′ Lt "C" 39+50.00			e
	f							12.0																						18" APC (B) w/ Conc Bkf	72.03′ Lt "C" 39+50.00 TO 72.10′ Lt "C" 40+00.00			f
	g								1.3		1.2					326		1			2.9									G2 DI w/ SGD (On Grade)	72.10′ Lt "C" 40+00.00			g
	h							31.2																						18" APC (B) w/ Conc Bkf	72.10′ Lt "C" 40+00.00 TO 69.00′ Lt "C" 41+25.42			h
	i								1.4		1.2					326		1			3.5									G2 DI w/ SGD (On Grade)	69.00′ Lt "C" 41+25.42			i
	j																													18" ASP w/ End Cap	69.00′ Lt "C" 41+25.42 TO 68.00′ Lt "C" 42+25.00			j
	k																													18" APC (B)	69.00′ Lt "C" 41+25.42 TO 5.00′ Rt "ENF" 41+24.00			k
	l																													REMOVE DI	9.82′ Rt "ENF" 41+23.56			l
	m																													REMOVE Culv (PORTION)	9.82′ Rt "ENF" 41+23.56 TO 3.05′ Rt "ENF" 41+23.99			m
	n								1.6		1.2					326		1			4.2									G2 DI w/ SGD (On Grade)	5.00′ Rt "ENF" 41+24.00			n
	o																													18" APC (B)	5.00′ Rt "ENF" 41+24.00 TO 5.00′ Rt "ENF" 40+50.00			o
	p								1.5		1.5					326		1			3.8									G2 DI w/ SGD (In Grade Sag)	5.00′ Rt "ENF" 40+50.00			p
	q																													18" APC (B)	5.00′ Rt "ENF" 40+50.00 TO 4.42′ Rt "ENF" 40+00.00			q
	r								1.5							326		1			3.8									G2 DI	4.42′ Rt "ENF" 40+00.00			r
	s																													18" ASP w/ End Cap	5.00′ Rt "ENF" 41+24.00 TO 4.00′ Rt "ENF" 43+50.00			s
SHEET TOTAL			2.6		10.0			86.3	13.8		11.6					3260		10												SHEET TOTAL				

DRAINAGE QUANTITIES DQ-56

STATE OF CALIFORNIA - DEPARTMENT OF TRANSPORTATION
Caltrans

CONSULTANT FUNCTIONAL SUPERVISOR: HAN-BIN LIANG

CALCULATED-DESIGNED BY: CLAIRE COUGHLAN
CHECKED BY: ANALETTE OCHOA

REVISED BY / DATE REVISED:
CC 06/02/10
CC 12/16/10
CC 05/12/11

LAST REVISION 05-12-11
DATE PLOTTED => 15-JUL-2011
TIME PLOTTED => 12:47

FOR NOTES AND ABBREVIATIONS, SEE SHEET DQ-1

Dist	COUNTY	ROUTE	POST MILES TOTAL PROJECT	SHEET No.	TOTAL SHEETS
04	SCI	101	48.7/52.0	339	993

REGISTERED CIVIL ENGINEER 05-13-11 DATE

7-11-11
PLANS APPROVAL DATE

REGISTERED PROFESSIONAL ENGINEER ANALETTE OCHOA No. C 55279 Exp. 12/31/12 CIVIL STATE OF CALIFORNIA

THE STATE OF CALIFORNIA OR ITS OFFICERS OR AGENTS SHALL NOT BE RESPONSIBLE FOR THE ACCURACY OR COMPLETENESS OF SCANNED COPIES OF THIS PLAN SHEET.

WRECO
1243 ALPINE ROAD
SUITE 108
WALNUT CREEK, CA 94596

SANTA CLARA VALLEY
TRANSPORTATION AUTHORITY
3331 N FIRST STREET
SAN JOSE, CA 95134

DRAINAGE QUANTITIES

DRAINAGE SYSTEM No.	DRAINAGE UNIT	REMOVE CULVERT (LF)	REMOVE INLET (EA)	REMOVE MH (EA)	REMOVE HEADWALL (EA)	REMOVE FES (EA)	REMOVE AUTOMATIC DRAINAGE GATE (EA)	REMOVE CONCRETE (MISCELLANEOUS) (CY)	CAP INLET (EA)	ADJUST INLET (EA)	18" ASP (LF)	12" ALTERNATIVE PIPE CULVERT (LF)	ALTERNATIVE PIPE CULVERT (TYPE A) 18" (LF)	ALTERNATIVE PIPE CULVERT (TYPE A) 24" (LF)	ALTERNATIVE PIPE CULVERT (TYPE A) 36" (LF)	ALTERNATIVE PIPE CULVERT (TYPE B) 18" (LF)	ALTERNATIVE PIPE CULVERT (TYPE B) 24" (LF)	ALTERNATIVE PIPE CULVERT (TYPE B) 30" (LF)	ALTERNATIVE PIPE CULVERT (TYPE B) 36" (LF)	ALTERNATIVE PIPE CULVERT (TYPE B) 42" (LF)	ALTERNATIVE PIPE CULVERT (TYPE B) 54" (LF)	14" x 23" OVAL RCP (CLASS III) (LF)	19" x 30" OVAL RCP (CLASS III) (LF)	18" CSP (LF)	18" AFES (EA)	24" AFES (EA)	30" AFES (EA)	36" AFES (EA)	24" TEE (N) (EA)	PIPE JOINT CLASSIFICATION (N)	MAXIMUM COVER (N) (LF)	DESCRIPTION	STATION	DRAINAGE PLAN No.	DRAINAGE SYSTEM No.	DRAINAGE UNIT
50	a										124																						18" ASP w/ End Cap	68.00' Lt "C" 42+75.00 TO 69.00' Lt "C" 44+00.00	D-2	50	a
	b																																G2 DI w/ SGD (In Grade Sag)	69.00' Lt "C" 44+00.00			b
	c															22														S	2.2	18" APC (B)	69.00' Lt "C" 44+00.00 TO 69.00' Lt "C" 44+25.00			c
	d																															G2 DI w/ SGD (On Grade)	69.00' Lt "C" 44+25.00			d
	e															47														S	2.4	18" APC (B)	69.00' Lt "C" 44+25.00 TO 69.00' Lt "C" 44+75.00			e
	f																															G2 DI w/ SGD (On Grade)	69.00' Lt "C" 44+75.00			f
	g															22														S	2.6	18" APC (B)	69.00' Lt "C" 44+75.00 TO 69.00' Lt "C" 45+00.00		50	g
	h																															G2 DI w/ SGD (In Grade Sag)	69.00' Lt "C" 45+00.00			h
	i															58														S	2.6	18" APC (B)	69.00' Lt "C" 45+00.00 TO 45.00' Lt "ENF" 44+97.88			i
	j																								1							18" AFES	45.00' Lt "ENF" 44+97.88			j
	k															47														S	2.6	18" APC (B)	69.00' Lt "C" 45+00.00 TO 69.00' Lt "C" 45+50.00			k
	l																															G2 DI w/ SGD (On Grade)	69.00' Lt "C" 45+50.00			l
	m															97														S	2.3	18" APC (B)	69.00' Lt "C" 45+50.00 TO 69.00' Lt "C" 46+50.00			m
	n																															G2 DI w/ SGD (In Grade Sag)	69.00' Lt "C" 46+50.00			n
	o										224																					18" ASP w/ End Cap	69.00' Lt "C" 46+50.00 TO 68.00' Lt "C" 48+75.00			o
											348					293								1							SHEET TOTAL				
									2																							SHEET TOTAL FROM DQ-59				
SHEET TOTAL																																SHEET TOTAL				
GRAND TOTAL		4090	35	3	22	6	1	5.0	8	28	2749	3	2568	180	50	11123	3533	738	2071	271	5	3380	947	14	19	2	3	1	1			GRAND TOTAL				

DRAINAGE QUANTITIES DQ-57

REVISED BY	DATE REVISED
CC	05/12/11
CC	12/16/10
CC	06/02/10

CALCULATED-DESIGNED BY: CLAIRE COUGHLAN
CHECKED BY: ANALETTE OCHOA
CONSULTANT FUNCTIONAL SUPERVISOR: HAN-BIN LIANG

STATE OF CALIFORNIA - DEPARTMENT OF TRANSPORTATION
Caltrans

LAST REVISION 05-12-11
DATE PLOTTED => 15-JUL-2011
TIME PLOTTED => 12:47

FOR NOTES AND ABBREVIATIONS, SEE SHEET DQ-1

Dist	COUNTY	ROUTE	POST MILES TOTAL PROJECT	SHEET No.	TOTAL SHEETS
04	SCI	101	48.7/52.0	340	993

REGISTERED CIVIL ENGINEER 05-13-11 DATE

7-11-11
PLANS APPROVAL DATE

REGISTERED PROFESSIONAL ENGINEER ANALETTE OCHOA No. C 55279 Exp. 12/31/12 CIVIL STATE OF CALIFORNIA

THE STATE OF CALIFORNIA OR ITS OFFICERS OR AGENTS SHALL NOT BE RESPONSIBLE FOR THE ACCURACY OR COMPLETENESS OF SCANNED COPIES OF THIS PLAN SHEET.

WRECO
1243 ALPINE ROAD
SUITE 108
WALNUT CREEK, CA 94596

SANTA CLARA VALLEY TRANSPORTATION AUTHORITY
3331 N FIRST STREET
SAN JOSE, CA 95134

DRAINAGE QUANTITIES

DRAINAGE SYSTEM No.	DRAINAGE UNIT	ROCK SLOPE PROTECTION: BACKING No. 1, METHOD B (CY)	ROCK SLOPE PROTECTION: BACKING No 2, METHOD B (CY)	ROCK SLOPE PROTECTION: LIGHT, METHOD B (CY)	ROCK SLOPE PROTECTION: FABRIC (SQYD)	STRUCTURAL CONCRETE (HEADWALL) (CY)	CONCRETE BACKFILL (FAST SETTING CONCRETE) (CY)	MINOR CONCRETE: BACKFILL (CY)	MINOR CONCRETE: MINOR STRUCTURE (CY)	MINOR CONCRETE: DITCH LINING (CY)	MINOR CONCRETE: GUTTER DEPRESSION (CY)	PLACE HMA (Misc AREA) (SQYD)	MINOR HOT MIX ASPHALT (TON)	DITCH EXCAVATION (CY)	BAR REINFORCING STEEL (HEADWALL) (LB)	Misc IRON AND STEEL (LB)	WELDED WIRE FABRIC (6" x 6", W1.4 x W1.4)(N) (SQYD)	INLET FRAME AND GRATE (N): TYPE 24-12 (EA)	INLET FRAME AND GRATE (N): TYPE 18-9 (EA)	MH COVER (TYPE U45) (N) (EA)	HEIGHT OF INLET/MH (N) (LF)	CONCRETE COLLAR (N) (EA)	IMPORTED BIOFILTRATION SOIL (CY)	CLASS 1 PERMEABLE MATERIAL (CY)	ABANDON CULVERT (EA)	36" AUTOMATIC DRAINAGE GATE (EA)	42" AUTOMATIC DRAINAGE GATE (EA)	18" STEEL FLARED END SECTION (EA)	14"x23" OVAL SHAPED CONCRETE FLARED END SECTION (EA)	19"x30" OVAL SHAPED CONCRETE FLARED END SECTION (EA)	DESCRIPTION	STATION	DRAINAGE PLAN No.	DRAINAGE SYSTEM No.	DRAINAGE UNIT
50	a																														18" ASP w/ End Cap	68.00' Lt "C" 42+75.00 TO 69.00' Lt "C" 44+00.00	D-2	50	a
	b								1.4		1.5					326		1			3.5										G2 DI w/ SGD (In Grade Sag)	69.00' Lt "C" 44+00.00			b
	c							5.6																							18" APC (B)	69.00' Lt "C" 44+00.00 TO 69.00' Lt "C" 44+25.00			c
	d								1.5		1.2					326		1			3.7										G2 DI w/ SGD (On Grade)	69.00' Lt "C" 44+25.00			d
	e																														18" APC (B)	69.00' Lt "C" 44+25.00 TO 69.00' Lt "C" 44+75.00			e
	f								1.5		1.2					326		1			3.9										G2 DI w/ SGD (On Grade)	69.00' Lt "C" 44+75.00			f
	g																														18" APC (B)	69.00' Lt "C" 44+75.00 TO 69.00' Lt "C" 45+00.00		50	g
	h								1.6		1.5					326		1			4.1										G2 DI w/ SGD (In Grade Sag)	69.00' Lt "C" 45+00.00			h
	i							14.8																							18" APC (B)	69.00' Lt "C" 45+00.00 TO 45.00' Lt "ENF" 44+97.88			i
	j																														18" AFES	45.00' Lt "ENF" 44+97.88			j
	k																														18" APC (B)	69.00' Lt "C" 45+00.00 TO 69.00' Lt "C" 45+50.00			k
	l								1.5		1.2					326		1			3.8										G2 DI w/ SGD (On Grade)	69.00' Lt "C" 45+50.00			l
	m							24.8																							18" APC (B)	69.00' Lt "C" 45+50.00 TO 69.00' Lt "C" 46+50.00			m
	n								1.4		1.5					326		1			3.5										G2 DI w/ SGD (In Grade Sag)	69.00' Lt "C" 46+50.00			n
	o																														18" ASP w/ End Cap	69.00' Lt "C" 46+50.00 TO 68.00' Lt "C" 48+75.00			o
								45.2	9.0		7.8					1956.0		6.0													SHEET TOTAL				
									6.5					9.4		1739		4		1											SHEET TOTAL FROM DQ-59				
SHEET TOTAL																															SHEET TOTAL				
GRAND TOTAL		21.3	248.6	47.2	879.0	3.0	278.4	3142.9	441.1	134.9	198.2	10.4	3.7	1983	175	91658	429.7	265	9	7	552.5	11	704.4	2	5.0	1	2	2	2	2	GRAND TOTAL				

DRAINAGE QUANTITIES DQ-58

STATE OF CALIFORNIA - DEPARTMENT OF TRANSPORTATION
Caltrans

CONSULTANT FUNCTIONAL SUPERVISOR: HAN-BIN LIANG

CALCULATED-DESIGNED BY: CLAIRE COUGHLAN
CHECKED BY: ANALETTE OCHOA

REVISED BY / DATE REVISED:
CC 06/02/10
CC 12/16/10
CC 05/12/11

LAST REVISION 05-12-11
DATE PLOTTED => 15-JUL-2011
TIME PLOTTED => 12:47

FOR NOTES AND ABBREVIATIONS, SEE SHEET DQ-1

Dist	COUNTY	ROUTE	POST MILES TOTAL PROJECT	SHEET No.	TOTAL SHEETS
04	SCI	101	48.7/52.0	341	993

REGISTERED CIVIL ENGINEER 05-13-11 DATE

7-11-11
PLANS APPROVAL DATE

REGISTERED PROFESSIONAL ENGINEER ANALETTE OCHOA No. C 55279 Exp. 12/31/12 CIVIL STATE OF CALIFORNIA

THE STATE OF CALIFORNIA OR ITS OFFICERS OR AGENTS SHALL NOT BE RESPONSIBLE FOR THE ACCURACY OR COMPLETENESS OF SCANNED COPIES OF THIS PLAN SHEET.

WRECO
1243 ALPINE ROAD
SUITE 108
WALNUT CREEK, CA 94596

SANTA CLARA VALLEY
TRANSPORTATION AUTHORITY
3331 N FIRST STREET
SAN JOSE, CA 95134

TEMPORARY DRAINAGE QUANTITIES

DRAINAGE SYSTEM No. ⬡	DRAINAGE UNIT ◯	18" Temp Culv (LF)	DITCH EXCAVATION (CY)	MINOR CONCRETE (MINOR STRUCTURE) (CY)	Misc IRON AND STEEL (LB)	CAP DI (EA)	Temp CREEK DIVERSION SYSTEM (LS)	FRAME AND GRATE (TYPE 24-12) (N) (EA)	MH COVER (TYPE U45) (N) (EA)	PIPE JOINT CLASSIFICATION (N)	DESCRIPTION	STATION	DRAINAGE PLAN No.	DRAINAGE SYSTEM No. ⬡	DRAINAGE UNIT ◯
500	a	103								S	18" Temp Culv	27.77′ Rt "OSN" 39+51.52 TO 3.87′ Rt "OSN" 38+55.88	D-19	500	a
	b			1.3	326	1		1			CAP G2 DI	3.87′ Rt "OSN" 38+55.88			b
															c
501	a			1.3	326			1			Temp G2 DI	54.04′ Rt "C" 38+48.75	D-18	501	a
	b	16								S	18" Temp Culv	54.04′ Rt "C" 38+48.75 TO 72.31′ Rt "C" 38+48.75			b
															a
502	a	32								S	18" Temp Culv	33.42′ Rt "ONF" 45+36.65 TO 15.60′ Rt "ONF" 45+61.48	D-21	502	a
	b			1.3	326	1		1			CAP G2 DI	15.60′ Rt "ONF" 45+61.48			b
503	a						1				Temp CREEK DIVERSION SYSTEM No. 1	"C" 72+00 (MATADERO CREEK)	D-22	503	a
504	a						1				Temp CREEK DIVERSION SYSTEM No. 2	"C" 110+00 (ADOBE CREEK/BARRON CREEK)	D-24	504	a
505	a		9.4								Temp UNLINED DITCH	Rt "C" 168+95.00 TO Rt "C" 172+70.00	D-25	505	a
506	c			1.3	435				1		Temp G2 MH	15.83′ Lt "RSF" 167+72.02	D-26	506	a
	b	52								S	18" Temp Culv	15.83′ Lt "RSF" 167+72.02 TO 44.57′ Lt "RSF" 168+04.44			b
507	a						1				Temp CREEK DIVERSION SYSTEM No. 3	"C" 187+50 (PERMANENTE CREEK)	D-27	507	a
508	a			1.3	326			1			Temp G2 DI	53.56′ Rt "C" 41+24.48	D-20	508	a
	b	17								S	18" Temp Culv	53.56′ Rt "C" 41+24.48 TO 72.58′ Rt "C" 41+24.87			b
SHEET TOTAL		220	9.4 *	6.5 *	1739 *	2 *	3	4 *	1 *						

(N) NOT A SEPARATE PAY ITEM, FOR INFORMATION ONLY
* QUANTITIES INCLUDED IN GRAND TOTAL ON DQ-57 & DQ-58

DRAINAGE QUANTITIES DQ-59

	CC	CC	CC	REVISED BY	CLAIRE COUGHLAN	CALCULATED-DESIGNED BY	CONSULTANT FUNCTIONAL SUPERVISOR	STATE OF CALIFORNIA - DEPARTMENT OF TRANSPORTATION
DATE REVISED	05/12/11	12/16/10	06/02/10	ANALETTE OCHOA	CHECKED BY	HAN-BIN LIANG	Caltrans

Dist	COUNTY	ROUTE	POST MILES TOTAL PROJECT	SHEET No.	TOTAL SHEETS
04	SCI	101	48.7/52.0	342	993

REGISTERED CIVIL ENGINEER — DATE: 05-13-11

7-11-11
PLANS APPROVAL DATE

REGISTERED PROFESSIONAL ENGINEER — ANALETTE OCHOA — No. C 55279 — Exp. 12/31/12 — CIVIL — STATE OF CALIFORNIA

THE STATE OF CALIFORNIA OR ITS OFFICERS OR AGENTS SHALL NOT BE RESPONSIBLE FOR THE ACCURACY OR COMPLETENESS OF SCANNED COPIES OF THIS PLAN SHEET.

WRECO
1243 ALPINE ROAD
SUITE 108
WALNUT CREEK, CA 94596

SANTA CLARA VALLEY
TRANSPORTATION AUTHORITY
3331 N FIRST STREET
SAN JOSE, CA 95134

NOTE:

FOR ACCURATE RIGHT OF WAY DATA, CONTACT RIGHT OF WAY ENGINEERING AT THE DISTRICT OFFICE.

LEGEND:

- EXIST DRAINAGE INLET
- GUTTER/DITCH FLOW LINE
- +00 / CL/V/O / A / 5′ — STATION / CLEANOUT/VENT/OUTLET / TYPE OF CLEANOUT, VENT OR OUTLET / LENGTH OF CLEANOUT, VENT OR OUTLET
- DRAINAGE INLET
- EDGE DRAIN

NOTES:

1. FOR SIZE AND ELEVATION OF EDGE DRAIN, SEE SHEET EDQ-1.
2. ALL TIES ARE TO CENTER OF DRAINAGE STRUCTURE OR AS NOTED.

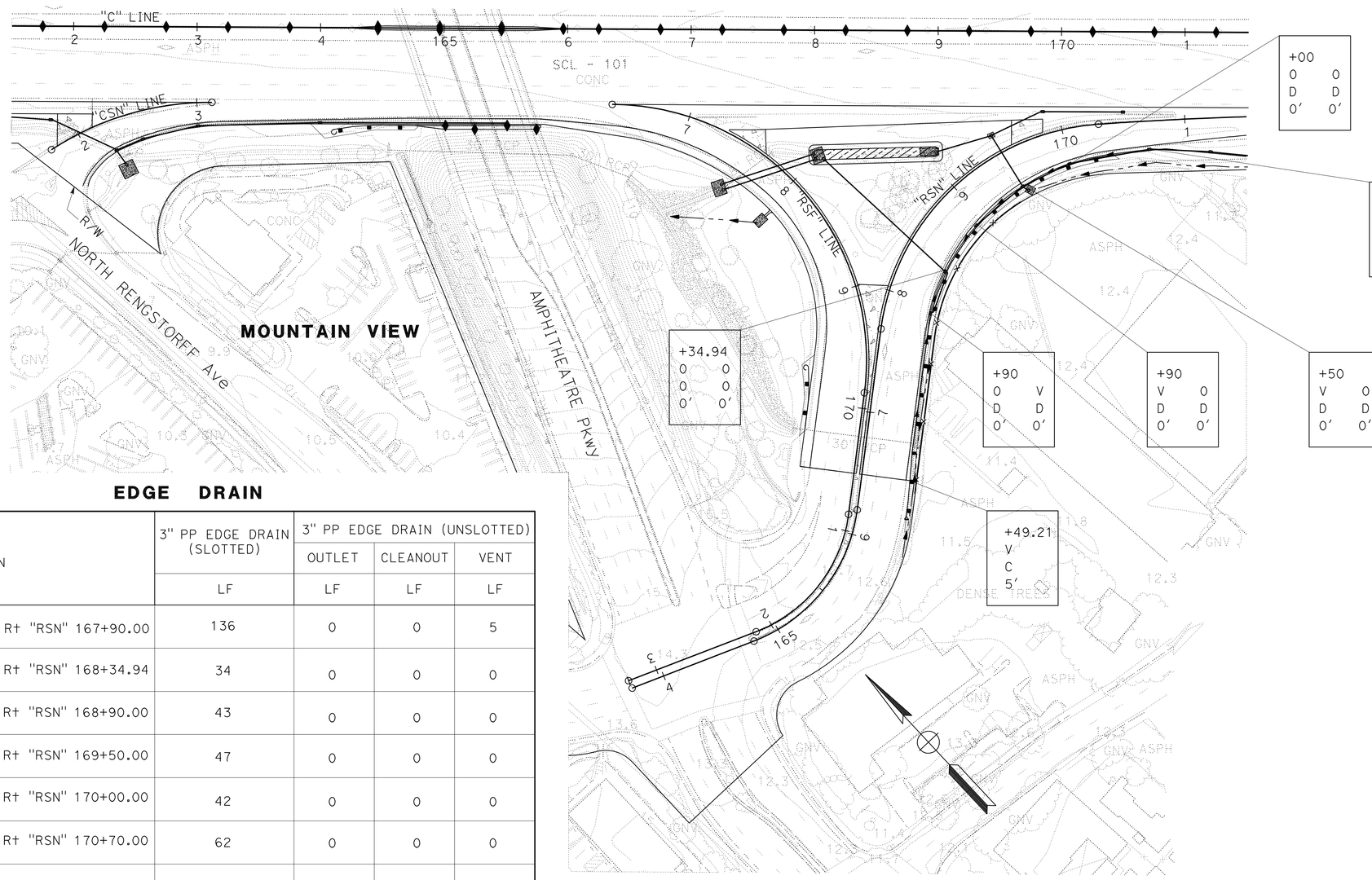

EDGE DRAIN

STATION	3" PP EDGE DRAIN (SLOTTED)	3" PP EDGE DRAIN (UNSLOTTED)		
		OUTLET	CLEANOUT	VENT
	LF	LF	LF	LF
R+ "RSN" 166+49.21 TO R+ "RSN" 167+90.00	136	0	0	5
R+ "RSN" 167+90.00 TO R+ "RSN" 168+34.94	34	0	0	0
R+ "RSN" 168+34.94 TO R+ "RSN" 168+90.00	43	0	0	0
R+ "RSN" 168+90.00 TO R+ "RSN" 169+50.00	47	0	0	0
R+ "RSN" 169+50.00 TO R+ "RSN" 170+00.00	42	0	0	0
R+ "RSN" 170+00.00 TO R+ "RSN" 170+70.00	62	0	0	0
SUBTOTAL	364	0	0	5
TOTAL	364	5		

THIS PLAN ACCURATE FOR EDGE DRAINAGE WORK ONLY

EDGE DRAIN PLAN

SCALE: 1" = 50′

ED-1

REVISED BY	DATE REVISED
CC	05/12/11
CC	12/16/10
CC	06/02/10

CALCULATED-DESIGNED BY: CLAIRE COUGHLAN
CHECKED BY: ANALETTE OCHOA
CONSULTANT FUNCTIONAL SUPERVISOR: HAN-BIN LIANG

STATE OF CALIFORNIA - DEPARTMENT OF TRANSPORTATION
Caltrans

LAST REVISION 05-12-11 | DATE PLOTTED => 15-JUL-2011 | TIME PLOTTED => 12:47

Dist	COUNTY	ROUTE	POST MILES TOTAL PROJECT	SHEET No.	TOTAL SHEETS
04	SCI	101	48.7/52.0	343	993

REGISTERED CIVIL ENGINEER 01-31-11 DATE

7-11-11
PLANS APPROVAL DATE

REGISTERED PROFESSIONAL ENGINEER ANALETTE OCHOA No. C 55279 Exp. 12/31/12 CIVIL STATE OF CALIFORNIA

THE STATE OF CALIFORNIA OR ITS OFFICERS OR AGENTS SHALL NOT BE RESPONSIBLE FOR THE ACCURACY OR COMPLETENESS OF SCANNED COPIES OF THIS PLAN SHEET.

WRECO
1243 ALPINE ROAD
SUITE 108
WALNUT CREEK, CA 94596

SANTA CLARA VALLEY
TRANSPORTATION AUTHORITY
3331 N FIRST STREET
SAN JOSE, CA 95134

EDGE DRAIN

STATION	3" PP EDGE DRAIN (SLOTTED)	3" PP EDGE DRAIN (UNSLOTTED)		
		OUTLET	CLEANOUT	VENT
	LF	LF	LF	LF
R† "RSN" 166+49.21 TO R† "RSN" 167+90.00	136	0	0	5
R† "RSN" 167+90.00 TO R† "RSN" 168+34.94	34	0	0	0
R† "RSN" 168+34.94 TO R† "RSN" 168+90.00	43	0	0	0
R† "RSN" 168+90.00 TO R† "RSN" 169+50.00	47	0	0	0
R† "RSN" 169+50.00 TO R† "RSN" 170+00.00	42	0	0	0
R† "RSN" 170+00.00 TO R† "RSN" 170+70.00	62	0	0	0
SUBTOTAL	364	0	0	5
TOTAL	364	5		

EDGE DRAIN QUANTITIES

EDQ-1

REVISED BY	DATE REVISED
CC	06/02/10
CC	12/16/10

CALCULATED-DESIGNED BY: CLAIRE COUGHLAN
CHECKED BY: ANALETTE OCHOA
CONSULTANT FUNCTIONAL SUPERVISOR: HAN-BIN LIANG

STATE OF CALIFORNIA - DEPARTMENT OF TRANSPORTATION
Caltrans

LAST REVISION 12-16-10 | DATE PLOTTED => 15-JUL-2011 | TIME PLOTTED => 12:47

Dist	COUNTY	ROUTE	POST MILES TOTAL PROJECT	SHEET No.	TOTAL SHEETS
04	SCI	101	48.7/52.0	344	993

REGISTERED CIVIL ENGINEER 05/13/11 DATE

7-11-11
PLANS APPROVAL DATE

REGISTERED PROFESSIONAL ENGINEER Christopher Lillie No. C61288 Exp. 06/30/11 CIVIL STATE OF CALIFORNIA

THE STATE OF CALIFORNIA OR ITS OFFICERS OR AGENTS SHALL NOT BE RESPONSIBLE FOR THE ACCURACY OR COMPLETENESS OF SCANNED COPIES OF THIS PLAN SHEET.

URS Corporation
100 W San Fernando St
Suite 200
San Jose, CA 95113

Santa Clara Valley
Transportation Authority
3331 N First Street
San Jose, CA 95134

LEGEND:

- WATER LINE - EXISTING
- U/G CABLE TV LINE - EXISTING
- U/G ELECTRICAL CONDUIT - EXISTING
- SANITARY SEWER LINE - EXISTING
- NATURAL GAS LINE - EXISTING
- U/G TELEPHONE LINE - EXISTING
- U/G COMMUNICATION LINE - EXISTING
- AERIAL ELECTRICAL LINE - EXISTING
- AERIAL CABLE TV LINE - EXISTING
- JOINT OVERHEAD - EXISTING
- JOINT TRENCH - EXISTING

LEGEND Cont

- UTILITY NUMBER
- POTHOLE
- NATURAL GAS LINE - PROPOSED
- AERIAL ELECTRICAL LINE - PROPOSED
- JOINT OVERHEAD - PROPOSED
- ABANDONED UTILITY LINE

ABBREVIATIONS:

ABS	ASBESTOS CONCRETE PIPE	KV	KILOVOLTS
ACP	ACRYLONITRILE BUTADIENE STYRENE	LDSP	LIGHT DUTY STEEL POLE
BWP	BAR WRAPPED PIPE	MH	MANHOLE
CATV	CABLE TELEVISION	OH	OVERHEAD
CAV	COMBINATION AIR VALVE	PA	PARALLEL
CIP	CORRUGATED IRON PIPE	PCP	POLYMER CONCRETE PIPE
CLA	CITY OF LOS ALTOS	PH	POTHOLE
CMP	CORRUGATED METAL PIPE	PVC	POLYVINYL CHLORIDE PIPE
CMV	CITY OF MOUNTAIN VIEW	RCP	REINFORCED CONCRETE PIPE
COMM	COMMUNICATION	SS	SANITARY SEWER
CPA	CITY OF PALO ALTO	TR	TRANSVERSE
CSP	CORRUGATED STEEL PIPE	TSP	TUBULAR STEEL POLE
DIP	DUCTILE IRON PIPE	U/G	UNDERGROUND
HDPE	HIGH DENSITY POLYETHYLENE		

ABBREVIATIONS Cont

V	VALVE
VCP	VITRIFIED CONCRETE PIPE

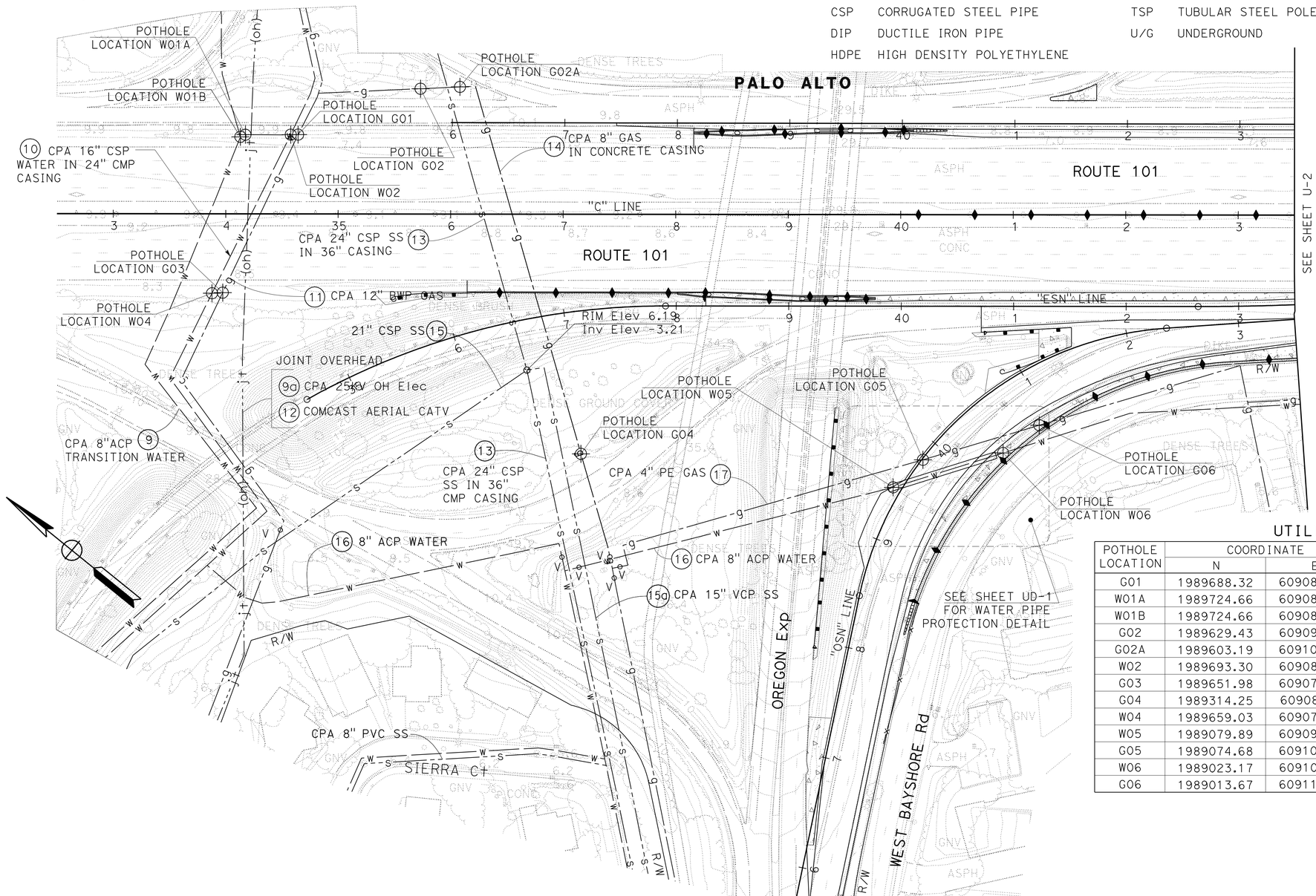

NOTES:

1. FOR ACCURATE RIGHT OF WAY DATA, CONTACT RIGHT OF WAY ENGINEERING AT THE DISTRICT OFFICE
2. FOR UTILITY DETAILS SEE SHEETS UD-1 THROUGH UD-9
3. LOCATIONS OF UTILITY FACILITIES SHOWN ON THESE PLANS ARE APPROXIMATE AND SHALL BE VERIFIED BY THE CONTRACTOR PRIOR TO CONSTRUCTION
4. ALL DEPTHS SHOWN REFER TO THE TOP OF PIPE ELEVATION UNLESS OTHERWISE INDICATED
5. IT SHALL BE THE CONTRACTOR'S RESPONSIBILITY TO IDENTIFY, LOCATE, AND PROTECT ALL UNDERGROUND AND OVERHEAD UTILITIES. THE CONTRACTOR SHALL NOTIFY THE ENGINEER AND UTILITY OWNER FOR ANY UTILITY OBSTRUCTION DURING CONSTRUCTION.
6. THE CONTRACTOR SHALL NOTIFY THE UTILITY OWNERS PRIOR TO WORKING NEAR THE HIGH AND LOW RISK UTILITIES.

UTILITY LOCATIONS

POTHOLE LOCATION	COORDINATE N	COORDINATE E	GROUND Elev	DEPTH	TYPE	SIZE (in)	OWNER
G01	1989688.32	6090889.73	7.73	2.67	GAS	12.0	CPA
W01A	1989724.66	6090860.16	7.98	5.00	WATER	8.0	CPA
W01B	1989724.66	6090855.98	8.00	4.92	WATER	8.0	CPA
G02	1989629.43	6090989.94	8.00	4.00	GAS	8.0	CPA
G02A	1989603.19	6091013.20	10.05	8.83	GAS	8.0	CPA
W02	1989693.30	6090885.44	7.69	3.67	WATER	16.0	CPA
G03	1989651.98	6090738.38	8.43	2.67	GAS	12.0	CPA
G04	1989314.25	6090827.31	8.09	5.33	GAS	8.0	CPA
W04	1989659.03	6090731.92	8.35	5.50	WATER	16.0	CPA
W05	1989079.89	6090987.78	7.15	4.33	WATER	8.0	CPA
G05	1989074.68	6091014.50	6.74	3.58	GAS	4.0	CPA
W06	1989023.17	6091064.04	7.880	4.33	WATER	8.0	CPA
G06	1989013.67	6091103.49	7.66	4.75	GAS	4.0	CPA

THIS PLAN ACCURATE FOR UTILITY INFORMATION ONLY

UTILITY PLAN

SCALE: 1" = 50'

U-1

STATE OF CALIFORNIA - DEPARTMENT OF TRANSPORTATION
Caltrans

CONSULTANT FUNCTIONAL SUPERVISOR: CHRISTOPHER LILLIE
CALCULATED-DESIGNED BY: SARAH CHRISTENSEN
CHECKED BY: LAN HO
REVISED BY: S C
DATE REVISED: 05/12/11

LAST REVISION 05-12-11
DATE PLOTTED => 15-JUL-2011
TIME PLOTTED => 13:12

Dist	COUNTY	ROUTE	POST MILES TOTAL PROJECT	SHEET No.	TOTAL SHEETS
04	SCI	101	48.7/52.0	345	993

REGISTERED CIVIL ENGINEER 05/13/11 DATE

7-11-11
PLANS APPROVAL DATE

REGISTERED PROFESSIONAL ENGINEER Christopher Lillie No. C61288 Exp. 06/30/11 CIVIL STATE OF CALIFORNIA

THE STATE OF CALIFORNIA OR ITS OFFICERS OR AGENTS SHALL NOT BE RESPONSIBLE FOR THE ACCURACY OR COMPLETENESS OF SCANNED COPIES OF THIS PLAN SHEET.

URS Corporation
100 W San Fernando St
Suite 200
San Jose, CA 95113

Santa Clara Valley
Transportation Authority
3331 N First Street
San Jose, CA 95134

NOTE:

FOR ACCURATE RIGHT OF WAY DATA, CONTACT
RIGHT OF WAY ENGINEERING AT THE DISTRICT OFFICE.

UTILITY LOCATIONS

POTHOLE LOCATION	COORDINATE N	COORDINATE E	GROUND Elev	DEPTH	TYPE	SIZE (in)	OWNER
C01	1988377.10	6091734.12	8.07	4.00	COMM	2-4.0	NEXTLINK
E01	1988558.09	6091851.74	6.76	7.00	ELEC	-	CPA
TV01	1988219.24	6092152.60	5.89	0.83	CATV	-	COMCAST
C02	1988262.87	6091838.58	8.06	4.08	COMM	2-4.0	NEXTLINK
E02	1988529.40	6091826.73	7.82	8.00	ELEC	-	CPA
T02	1988558.09	6091851.74	6.76	7.00	TEL	-	AT&T
TV02	1988102.37	6092226.42	6.01	0.13	CATV	-	COMCAST
C03	1988288.52	6092177.31	4.94	3.83	COMM	-	MCI
E03	1988408.06	6091730.31	5.54	6.00	ELEC	-	CPA
C04	1988147.55	6092211.11	5.20	3.00	COMM	-	CPA
E04	1988200.59	6092171.96	5.10	2.25	ELEC	-	CPA

POTHOLE LOCATION	COORDINATE N	COORDINATE E	GROUND Elev	DEPTH	TYPE	SIZE (in)	OWNER
T04	1988529.40	6091826.73	7.82	8.00	TEL	-	AT&T
E05	1988147.55	6092211.11	5.20	3.00	ELEC	-	CPA
RW05	1988010.03	6092272.74	7.01	5.25	REC. WATER	30.0	CPA
T05	1988422.82	6091715.25	5.17	9.00	TEL	-	AT&T
RW06	1988258.42	6092111.25	7.86	5.67	REC. WATER	30.0	CPA
T06	1988408.06	6091730.31	5.89	6.00	TEL	-	AT&T
W07	1988580.79	6091835.49	5.98	6.17	WATER	12.0	CPA
W08	1988551.19	6091810.29	8.00	7.17	WATER	12.0	CPA
W09	1988427.42	6091710.37	5.08	4.75	WATER	12.0	CPA
W10	1988217.08	6092137.38	7.14	4.00	WATER	12.0	CPA
W11	1988036.11	6092266.11	6.47	4.00	WATER	12.0	CPA
GP15	1988678.31	6091991.94	6.20	5.17	GAS	36.0	PG&E
GP16	1988659.99	6092019.10	5.27	5.58	GAS	36.0	PG&E
GP17	1988383.63	6092112.36	5.13	3.58	GAS	36.0	PG&E
GP18	1988105.51	6092267.73	3.80	7.50	GAS	36.0	PG&E
G30	1988445.277	6091715.332	7.57	3.67	GAS	UNKNOWN	UNKNOWN
G31	1988284.242	6092108.975	7.11	4.92	GAS	4.0	CPA

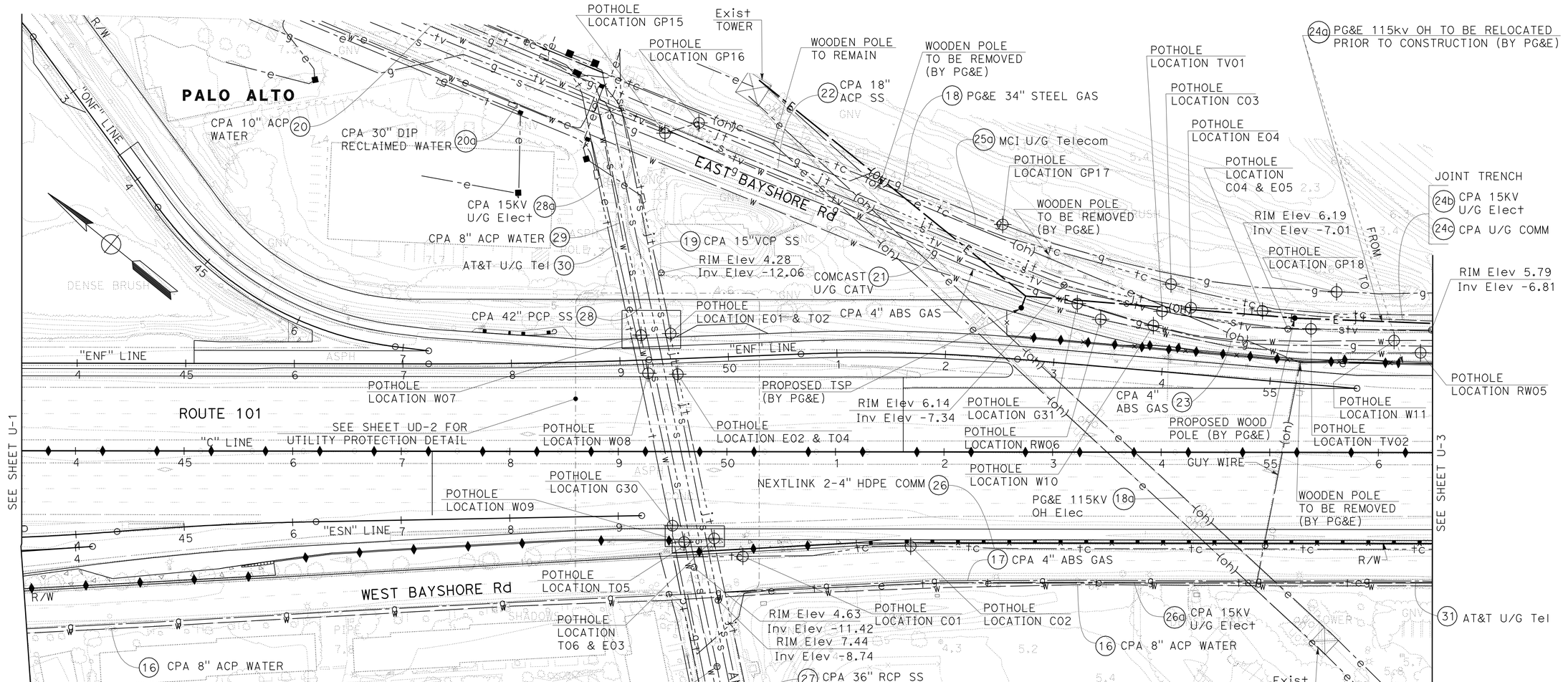

FOR NOTES, ABBREVIATIONS AND LEGEND SEE SHEET U-1

THIS PLAN ACCURATE FOR UTILITY INFORMATION ONLY

UTILITY PLAN

SCALE: 1" = 50'

U-2

STATE OF CALIFORNIA - DEPARTMENT OF TRANSPORTATION

Caltrans

CONSULTANT FUNCTIONAL SUPERVISOR: CHRISTOPHER LILLIE

CALCULATED-DESIGNED BY: SARAH CHRISTENSEN

CHECKED BY: LAN HO

REVISED BY: S C

DATE REVISED: 05/12/11

LAST REVISION 05-12-11

DATE PLOTTED => 15-JUL-2011
TIME PLOTTED => 13:12

Dist	COUNTY	ROUTE	POST MILES TOTAL PROJECT	SHEET No.	TOTAL SHEETS
04	SCI	101	48.7/52.0	346	993

REGISTERED CIVIL ENGINEER 05/13/11 DATE

7-11-11
PLANS APPROVAL DATE

REGISTERED PROFESSIONAL ENGINEER Christopher Lillie No. C61288 Exp. 06/30/11 CIVIL STATE OF CALIFORNIA

THE STATE OF CALIFORNIA OR ITS OFFICERS OR AGENTS SHALL NOT BE RESPONSIBLE FOR THE ACCURACY OR COMPLETENESS OF SCANNED COPIES OF THIS PLAN SHEET.

URS Corporation
100 W San Fernando St
Suite 200
San Jose, CA 95113

Santa Clara Valley
Transportation Authority
3331 N First Street
San Jose, CA 95134

NOTE:

FOR ACCURATE RIGHT OF WAY DATA, CONTACT
RIGHT OF WAY ENGINEERING AT THE DISTRICT OFFICE.

UTILITY LOCATIONS

POTHOLE LOCATION	COORDINATE N	COORDINATE E	GROUND Elev	DEPTH	TYPE	SIZE (in)	OWNER
RW01	1987077.50	6093032.93	9.43	1.25	REC.WATER	30.0	CPA
RW02	1987303.79	6092842.82	6.59	4.83	REC.WATER	30.0	CPA
RW03	1987542.96	6092650.23	7.28	3.67	REC.WATER	30.0	CPA
TV03	1987596.10	6092630.04	7.02	1.50	CATV	-	COMCAST
RW04	1987776.42	6092461.23	6.95	5.17	REC.WATER	30.0	CPA
C05	1987862.62	6092429.03	5.37	2.50	COMM	-	MCI
C06	1987610.64	6092632.87	5.94	2.92	COMM	-	MCI
E06	1987862.64	6092429.00	5.38	2.67	ELEC	-	CPA
C07	1987232.48	6092653.41	7.79	4.58	COMM	-	NEXTLINK
E07	1987610.66	6092632.88	5.85	3.25	ELEC	-	CPA
C08	1987350.02	6092843.25	5.13	4.92	COMM	-	MCI
E08	1987349.98	6092843.24	5.13	5.00	ELEC	-	CPA
C09	1987111.90	6093032.45	7.99	2.42	COMM	-	MCI

POTHOLE LOCATION TABLE

POTHOLE LOCATION	COORDINATE N	COORDINATE E	GROUND Elev	DEPTH	TYPE	SIZE (in)	OWNER
E09	1987111.93	6093032.43	8.04	3.83	ELEC	-	CPA
E10	1987060.81	6093012.63	8.87	7.67	ELEC	-	CPA
E11	1986971.49	6092885.45	5.56	7.08	ELEC	-	CPA
T12	1987111.92	6093032.44	7.97	2.42	TEL	-	AT&T
T13	1986971.49	6092885.45	5.56	7.08	TEL	-	AT&T
T14	1987060.81	6093012.63	8.87	7.67	TEL	-	AT&T
GP19	1987958.71	6092385.29	4.92	8.00	GAS	36.0	PG&E
GP20	1987699.82	6092594.38	3.87	6.67	GAS	36.0	PG&E
E23	1987046.96	6093042.65	9.94	2.00	ELEC	-	CPA
W26	1987590.87	6092624.68	7.22	3.67	WATER	10.0	CPA
G32	1987180.52	6092955.90	7.48	4.75	GAS	4.0	CPA

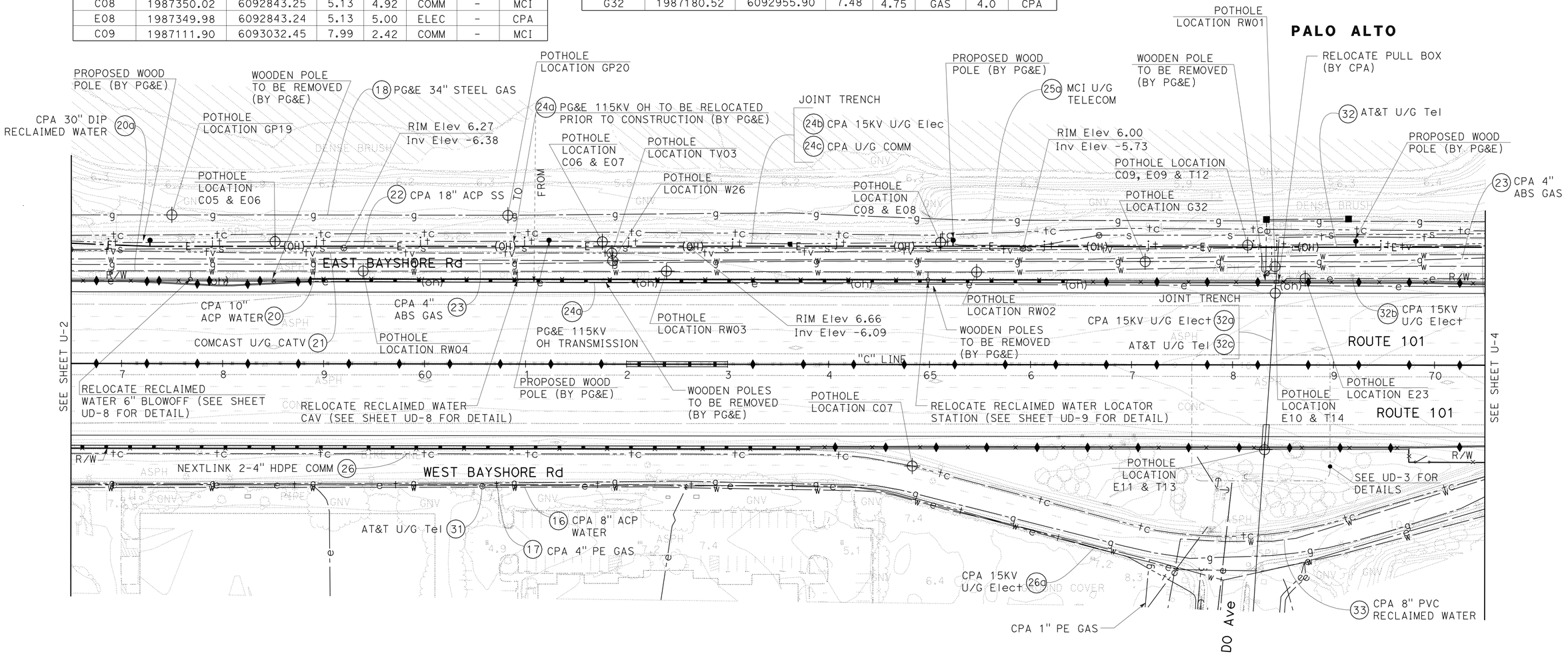

FOR NOTES, ABBREVIATIONS AND LEGEND SEE SHEET U-1

UTILITY PLAN

SCALE: 1" = 50'

U-3

THIS PLAN ACCURATE FOR UTILITY INFORMATION ONLY

STATE OF CALIFORNIA - DEPARTMENT OF TRANSPORTATION

Caltrans

CONSULTANT FUNCTIONAL SUPERVISOR: CHRISTOPHER LILLIE

CALCULATED-DESIGNED BY: SARAH CHRISTENSEN

CHECKED BY: LAN HO

REVISED BY: S C

DATE REVISED: 05/12/11

LAST REVISION 05-12-11 | DATE PLOTTED => 15-JUL-2011 | TIME PLOTTED => 13:13

Dist	COUNTY	ROUTE	POST MILES TOTAL PROJECT	SHEET No.	TOTAL SHEETS
04	SCI	101	48.7/52.0	347	993

REGISTERED CIVIL ENGINEER 01/31/11 DATE

7-11-11
PLANS APPROVAL DATE

REGISTERED PROFESSIONAL ENGINEER Christopher Lillie No. C61288 Exp. 06/30/11 CIVIL STATE OF CALIFORNIA

THE STATE OF CALIFORNIA OR ITS OFFICERS OR AGENTS SHALL NOT BE RESPONSIBLE FOR THE ACCURACY OR COMPLETENESS OF SCANNED COPIES OF THIS PLAN SHEET.

URS Corporation
100 W San Fernando St
Suite 200
San Jose, CA 95113

Santa Clara Valley
Transportation Authority
3331 N First Street
San Jose, CA 95134

NOTE:

FOR ACCURATE RIGHT OF WAY DATA, CONTACT RIGHT OF WAY ENGINEERING AT THE DISTRICT OFFICE.

UTILITY LOCATIONS

POTHOLE LOCATION	COORDINATE N	COORDINATE E	GROUND Elev	DEPTH	TYPE	SIZE (in)	OWNER
TV04	1986892.30	6093208.71	11.44	2.50	CATV	-	COMCAST
TV05	1986612.13	6093429.91	10.19	0.83	CATV	-	COMCAST
G08	1986684.89	6093400.13	10.69	8.50	GAS	36.0	PG&E
G09	1986632.00	6093383.23	11.17	6.33	GAS	36.0	PG&E
C10	1986893.79	6093213.62	10.95	2.25	COMM	-	MCI
G10	1986337.60	6093621.03	6.68	5.50	GAS	36.0	PG&E
C11	1986726.63	6093075.29	12.52	19.08	COMM	-	NEXTLINK

POTHOLE LOCATION	COORDINATE N	COORDINATE E	GROUND Elev	DEPTH	TYPE	SIZE (in)	OWNER
G11	1986016.75	6093879.45	6.89	6.25	GAS	36.0	PG&E
E13	1986834.95	6093210.24	12.59	1.08	ELEC	-	CPA
W13	1986905.46	6093187.07	11.93	3.67	WATER	10.0	CPA
C14	1986223.70	6093485.04	7.12	5.58	COMM	-	MCI
E14	1986694.99	6093370.56	10.86	3.08	ELEC	-	CPA
W14	1986608.93	6093425.87	8.98	3.50	WATER	10.0	CPA
E15	1986559.67	6093502.62	8.98	2.75	ELEC	-	CPA
T19	1986489.79	6093528.72	7.98	7.17	TEL	-	AT&T
TV21	1986908.00	6093457.85	9.54	0.75	CATV	-	COMCAST
E24	1987046.96	6093185.85	12.32	2.17	ELEC	-	CPA
G33	1986859.08	6093225.44	11.95	4.08	GAS	4.0	CPA

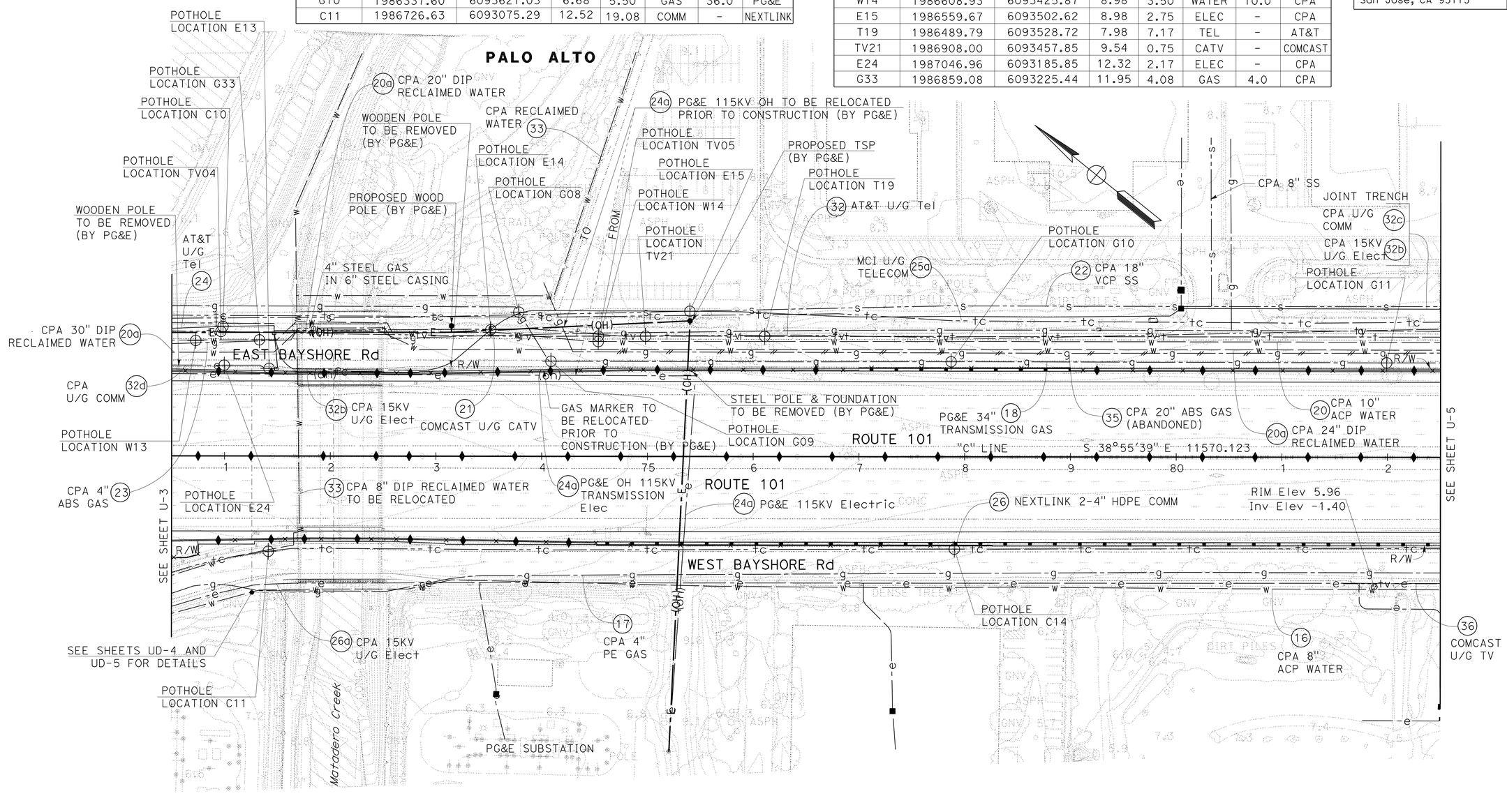

FOR NOTES, ABBREVIATIONS AND LEGEND SEE SHEET U-1

UTILITY PLAN

SCALE: 1" = 50'

U-4

THIS PLAN ACCURATE FOR UTILITY INFORMATION ONLY

STATE OF CALIFORNIA - DEPARTMENT OF TRANSPORTATION
Caltrans

CONSULTANT FUNCTIONAL SUPERVISOR: CHRISTOPHER LILLIE
CALCULATED-DESIGNED BY: SARAH CHRISTENSEN
CHECKED BY: LAN HO
REVISED BY: S C
DATE REVISED: 01-24-11

LAST REVISION 01-24-11
DATE PLOTTED => 15-JUL-2011
TIME PLOTTED => 13:13

Dist	COUNTY	ROUTE	POST MILES TOTAL PROJECT	SHEET No.	TOTAL SHEETS
04	SCI	101	48.7/52.0	348	993

REGISTERED CIVIL ENGINEER 01/31/11 DATE

7-11-11
PLANS APPROVAL DATE

REGISTERED PROFESSIONAL ENGINEER Christopher Lillie No. C61288 Exp. 06/30/11 CIVIL STATE OF CALIFORNIA

THE STATE OF CALIFORNIA OR ITS OFFICERS OR AGENTS SHALL NOT BE RESPONSIBLE FOR THE ACCURACY OR COMPLETENESS OF SCANNED COPIES OF THIS PLAN SHEET.

URS Corporation
100 W San Fernando St
Suite 200
San Jose, CA 95113

Santa Clara Valley
Transportation Authority
3331 N First Street
San Jose, CA 95134

NOTE:

FOR ACCURATE RIGHT OF WAY DATA, CONTACT RIGHT OF WAY ENGINEERING AT THE DISTRICT OFFICE.

UTILITY LOCATIONS

POTHOLE LOCATION	COORDINATE N	COORDINATE E	GROUND Elev	DEPTH	TYPE	SIZE (in)	OWNER
G12	1985863.698	6094003.073	7.249	7.000	GAS	36.0	PG&E
G13	1985523.532	6094280.001	7.444	9.000	GAS	36.0	PG&E
G14	1985522.831	6094309.477	6.826	8.667	GAS	36.0	PG&E
C15	1985510.762	6094063.576	7.366	4.833	COMM	-	NEXTLINK

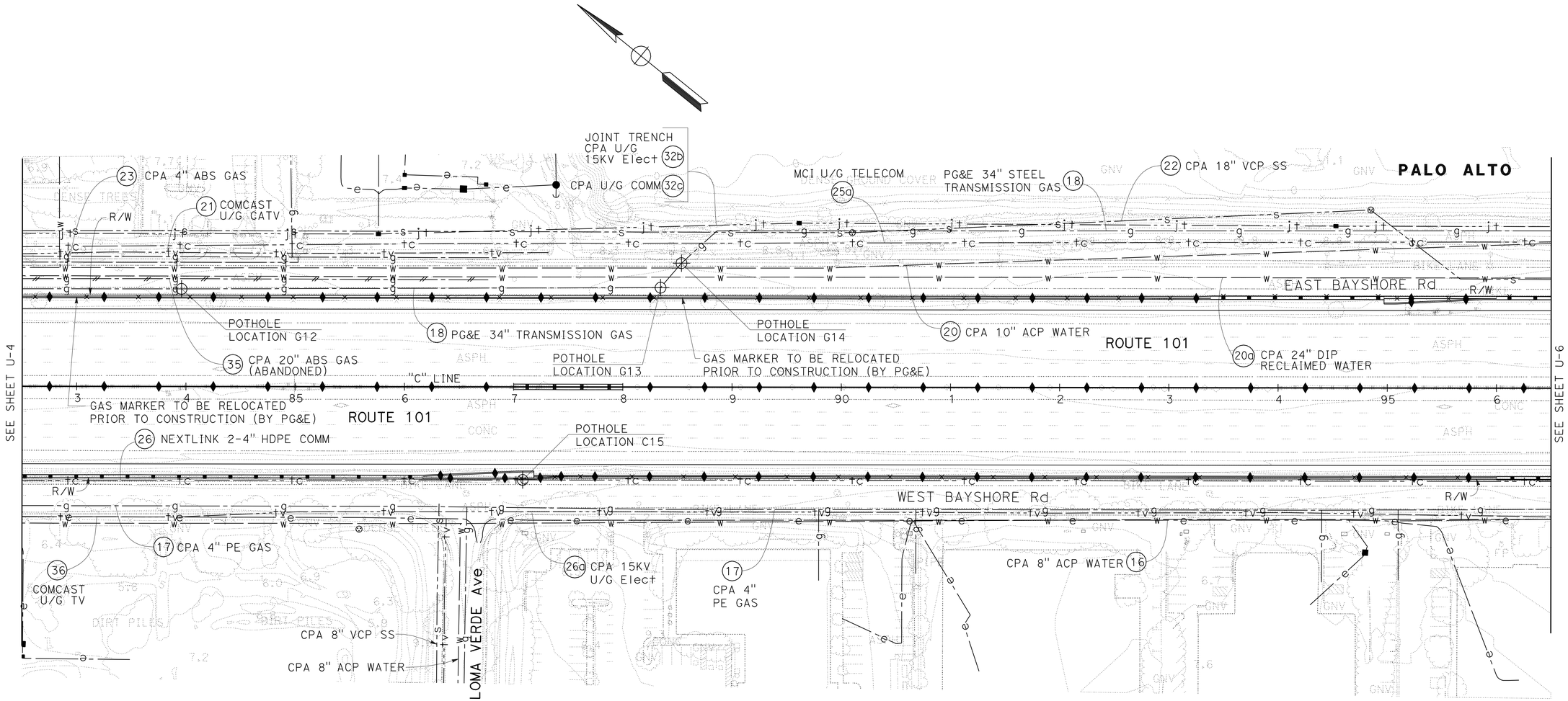

FOR NOTES, ABBREVIATIONS AND LEGEND SEE SHEET U-1

UTILITY PLAN

SCALE: 1" = 50'

U-5

THIS PLAN ACCURATE FOR UTILITY INFORMATION ONLY

STATE OF CALIFORNIA - DEPARTMENT OF TRANSPORTATION

Caltrans

CONSULTANT FUNCTIONAL SUPERVISOR: CHRISTOPHER LILLIE

CALCULATED-DESIGNED BY: SARAH CHRISTENSEN

CHECKED BY: LAN HO

REVISED BY: S C

DATE REVISED: 01/24/11

LAST REVISION 01-24-11 | DATE PLOTTED => 15-JUL-2011 | TIME PLOTTED => 13:13

Dist	COUNTY	ROUTE	POST MILES TOTAL PROJECT	SHEET No.	TOTAL SHEETS
04	SCI	101	48.7/52.0	349	993

REGISTERED CIVIL ENGINEER 01/31/11 DATE

7-11-11
PLANS APPROVAL DATE

REGISTERED PROFESSIONAL ENGINEER Christopher Lillie No. C61288 Exp. 06/30/11 CIVIL STATE OF CALIFORNIA

THE STATE OF CALIFORNIA OR ITS OFFICERS OR AGENTS SHALL NOT BE RESPONSIBLE FOR THE ACCURACY OR COMPLETENESS OF SCANNED COPIES OF THIS PLAN SHEET.

URS Corporation
100 W San Fernando St
Suite 200
San Jose, CA 95113

Santa Clara Valley
Transportation Authority
3331 N First Street
San Jose, CA 95134

NOTE:

FOR ACCURATE RIGHT OF WAY DATA, CONTACT
RIGHT OF WAY ENGINEERING AT THE DISTRICT OFFICE.

UTILITY LOCATIONS

POTHOLE LOCATION	COORDINATE N	COORDINATE E	GROUND Elev	DEPTH	TYPE	SIZE (in)	OWNER
C16	1983911.08	6095355.19	11.91	5.00	COMM	-	NEXTLINK

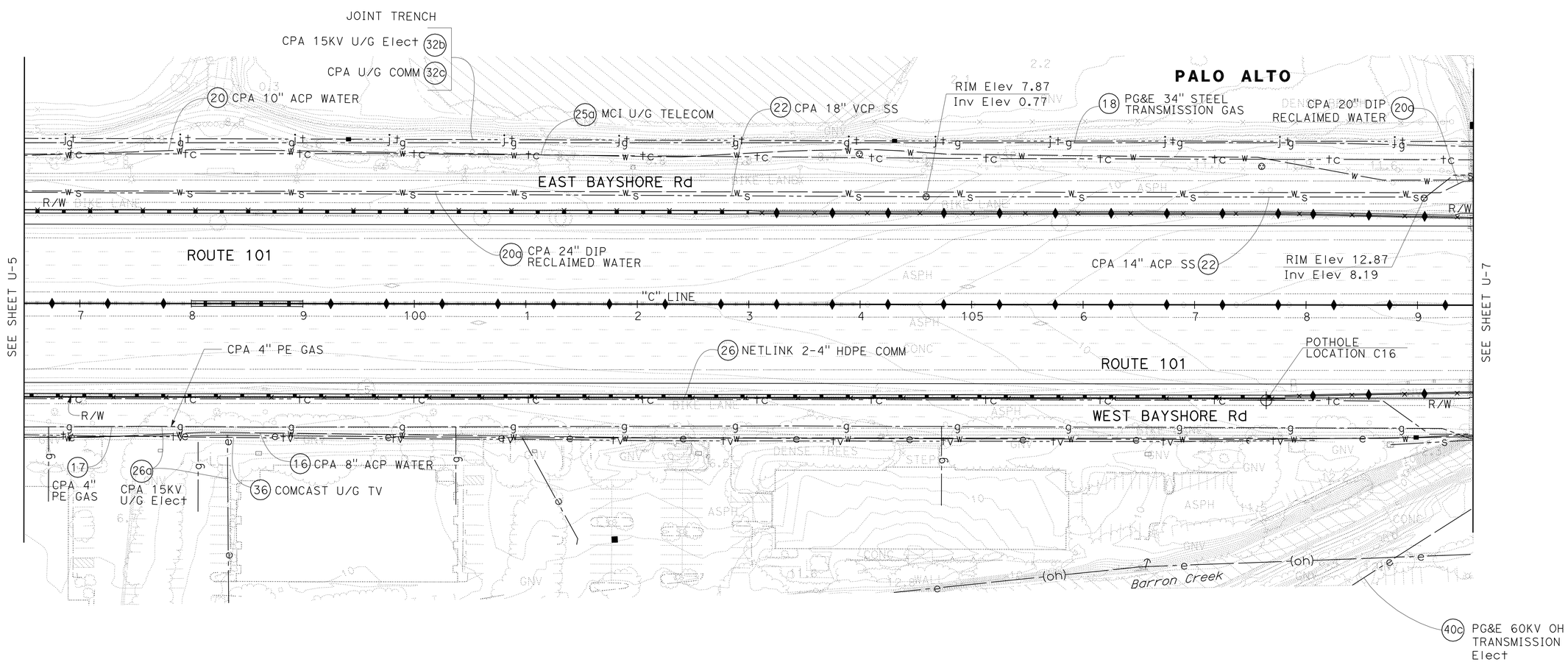

FOR NOTES, ABBREVIATIONS AND/OR LEGEND SEE SHEET U-1

THIS PLAN ACCURATE FOR UTILITY INFORMATION ONLY

UTILITY PLAN

SCALE: 1" = 50'

U-6

STATE OF CALIFORNIA - DEPARTMENT OF TRANSPORTATION

Caltrans

CONSULTANT FUNCTIONAL SUPERVISOR: CHRISTOPHER LILLIE

CALCULATED-DESIGNED BY: SARAH CHRISTENSEN | CHECKED BY: LAN HO

REVISED BY: S C | DATE REVISED: 01/24/11

LAST REVISION | DATE PLOTTED => 15-JUL-2011 | TIME PLOTTED => 13:13
01-24-11

Dist	COUNTY	ROUTE	POST MILES TOTAL PROJECT	SHEET No.	TOTAL SHEETS
04	SCI	101	48.7/52.0	350	993

REGISTERED CIVIL ENGINEER 01/31/11 DATE

7-11-11
PLANS APPROVAL DATE

REGISTERED PROFESSIONAL ENGINEER Christopher Lillie No. C61288 Exp. 06/30/11 CIVIL STATE OF CALIFORNIA

THE STATE OF CALIFORNIA OR ITS OFFICERS OR AGENTS SHALL NOT BE RESPONSIBLE FOR THE ACCURACY OR COMPLETENESS OF SCANNED COPIES OF THIS PLAN SHEET.

URS Corporation
100 W San Fernando St
Suite 200
San Jose, CA 95113

Santa Clara Valley
Transportation Authority
3331 N First Street
San Jose, CA 95134

NOTE:

FOR ACCURATE RIGHT OF WAY DATA, CONTACT
RIGHT OF WAY ENGINEERING AT THE DISTRICT OFFICE.

UTILITY LOCATIONS

POTHOLE LOCATION	COORDINATE N	COORDINATE E	GROUND Elev	DEPTH	TYPE	SIZE (in)	OWNER
GP13	1983518.35	6095651.43	10.91	2.75	GAS	4.0	CPA
W15	1983515.20	6095647.96	10.63	3.50	WATER	8.0	CPA
E16	1983502.85	6095634.78	10.38	3.50	ELEC	-	CPA
G34	1983592.78	6095891.31	9.40	10.00	GAS	24.0	PG&E
C17	1983803.16	6095714.67	12.02	1.33	COMM	-	MCI

POTHOLE LOCATION	COORDINATE N	COORDINATE E	GROUND Elev	DEPTH	TYPE	SIZE (in)	OWNER
G35	1983536.03	6095976.49	8.53	9.50	GAS	24.0	PG&E
W16	1983401.93	6095976.49	5.19	4.92	WATER	14.0	CPA
W17	1983300.91	6095850.23	7.82	5.17	WATER	14.0	CPA
C18	1983476.39	6095671.29	9.73	5.58	COMM	-	NEXTLINK
C19	1983551.73	6095854.04	8.36	8.75	COMM	-	MCI
C21	1983317.79	6095834.44	7.74	8.58	COMM	-	NEXTLINK

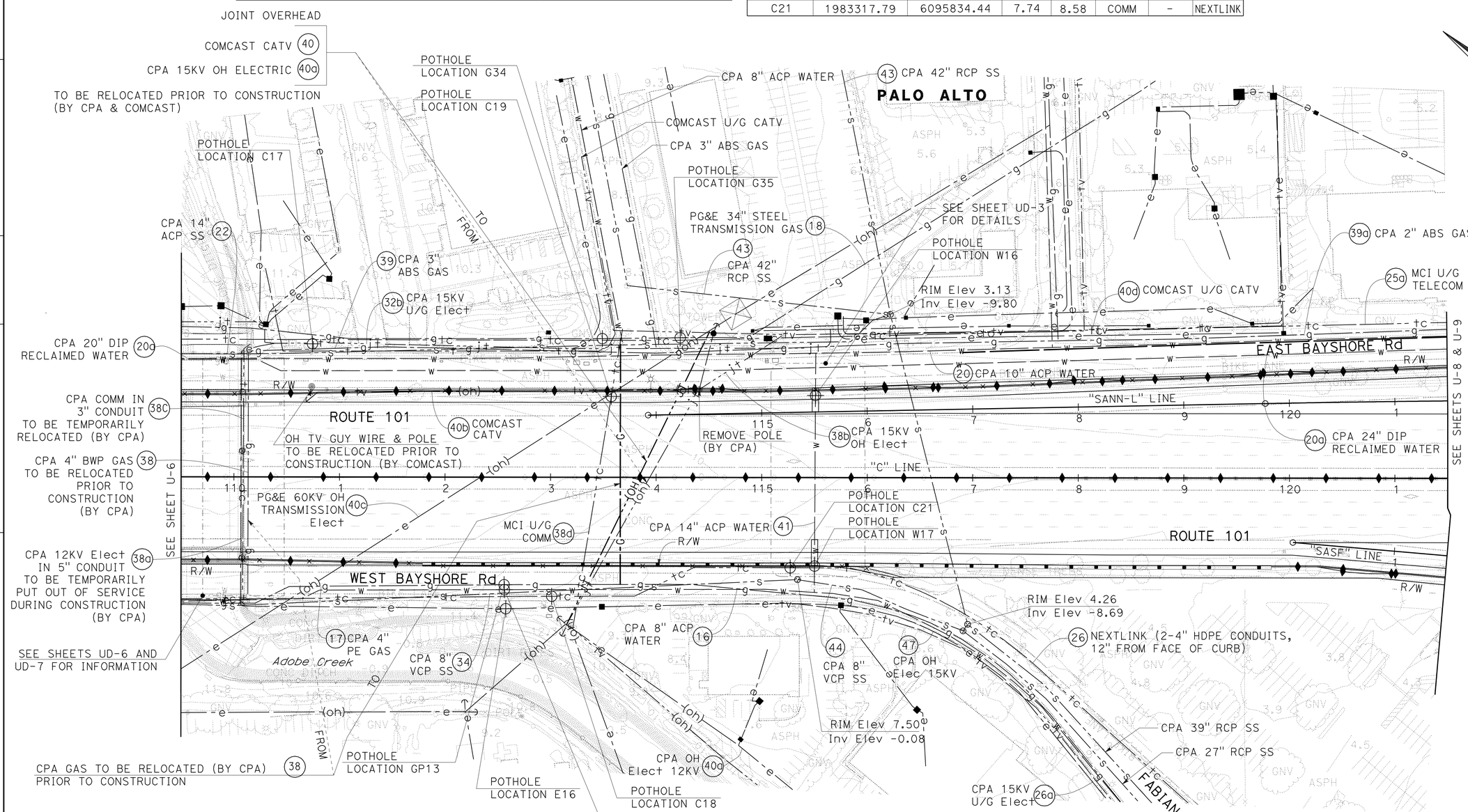

FOR NOTES, ABBREVIATIONS AND LEGEND SEE SHEET U-1

THIS PLAN ACCURATE FOR UTILITY INFORMATION ONLY

UTILITY PLAN

SCALE: 1" = 50'

U-7

STATE OF CALIFORNIA - DEPARTMENT OF TRANSPORTATION
Caltrans

CONSULTANT FUNCTIONAL SUPERVISOR: CHRISTOPHER LILLIE
CALCULATED-DESIGNED BY: SARAH CHRISTENSEN
CHECKED BY: LAN HO
REVISED BY: S C
DATE REVISED: 01/24/11

LAST REVISION DATE PLOTTED => 15-JUL-2011
TIME PLOTTED => 13:14
01-24-11

Dist	COUNTY	ROUTE	POST MILES TOTAL PROJECT	SHEET No.	TOTAL SHEETS
04	SCI	101	48.7/52.0	351	993

REGISTERED CIVIL ENGINEER 05/13/11 DATE

7-11-11
PLANS APPROVAL DATE

REGISTERED PROFESSIONAL ENGINEER Christopher Lillie No. C61288 Exp. 06/30/11 CIVIL STATE OF CALIFORNIA

THE STATE OF CALIFORNIA OR ITS OFFICERS OR AGENTS SHALL NOT BE RESPONSIBLE FOR THE ACCURACY OR COMPLETENESS OF SCANNED COPIES OF THIS PLAN SHEET.

URS Corporation
100 W San Fernando St
Suite 200
San Jose, CA 95113

Santa Clara Valley
Transportation Authority
3331 N First Street
San Jose, CA 95134

NOTE:

FOR ACCURATE RIGHT OF WAY DATA, CONTACT
RIGHT OF WAY ENGINEERING AT THE DISTRICT OFFICE.

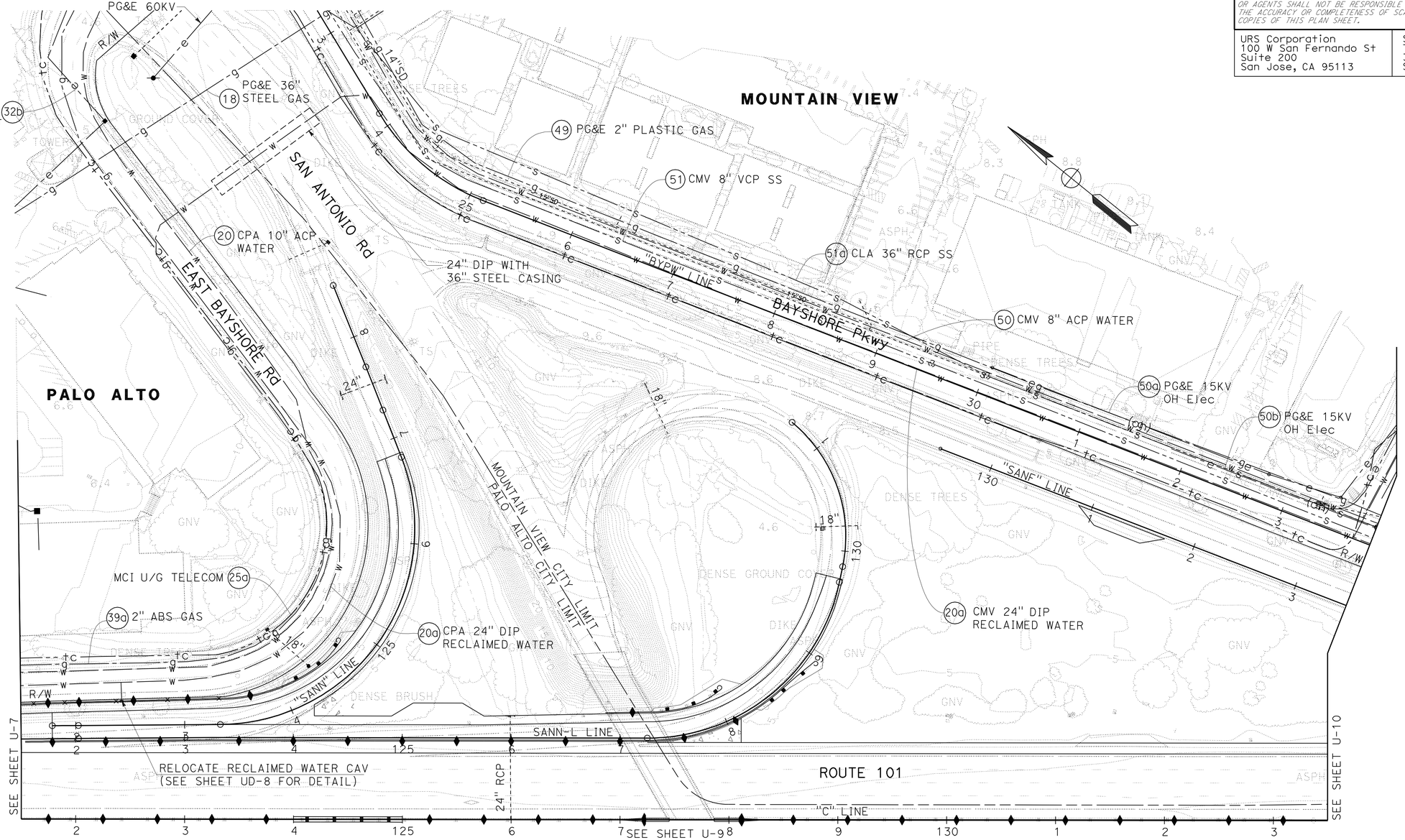

FOR NOTES, ABBREVIATIONS AND LEGEND SEE SHEET U-1

UTILITY PLAN

SCALE: 1" = 50'

U-8

THIS PLAN ACCURATE FOR UTILITY INFORMATION ONLY

STATE OF CALIFORNIA - DEPARTMENT OF TRANSPORTATION

Caltrans

CONSULTANT FUNCTIONAL SUPERVISOR: CHRISTOPHER LILLIE

CALCULATED-DESIGNED BY: SARAH CHRISTENSEN

CHECKED BY: LAN HO

REVISED BY: S C

DATE REVISED: 05/12/11

LAST REVISION 05-12-11 | DATE PLOTTED => 15-JUL-2011 | TIME PLOTTED => 13:14

Dist	COUNTY	ROUTE	POST MILES TOTAL PROJECT	SHEET No.	TOTAL SHEETS
04	SCI	101	48.7/52.0	352	993

REGISTERED CIVIL ENGINEER 05/13/11 DATE

7-11-11
PLANS APPROVAL DATE

REGISTERED PROFESSIONAL ENGINEER Christopher Lillie No. C61288 Exp. 06/30/11 CIVIL STATE OF CALIFORNIA

THE STATE OF CALIFORNIA OR ITS OFFICERS OR AGENTS SHALL NOT BE RESPONSIBLE FOR THE ACCURACY OR COMPLETENESS OF SCANNED COPIES OF THIS PLAN SHEET.

URS Corporation
100 W San Fernando St
Suite 200
San Jose, CA 95113

Santa Clara Valley
Transportation Authority
3331 N First Street
San Jose, CA 95134

NOTE:

FOR ACCURATE RIGHT OF WAY DATA, CONTACT
RIGHT OF WAY ENGINEERING AT THE DISTRICT OFFICE.

MOUNTAIN VIEW

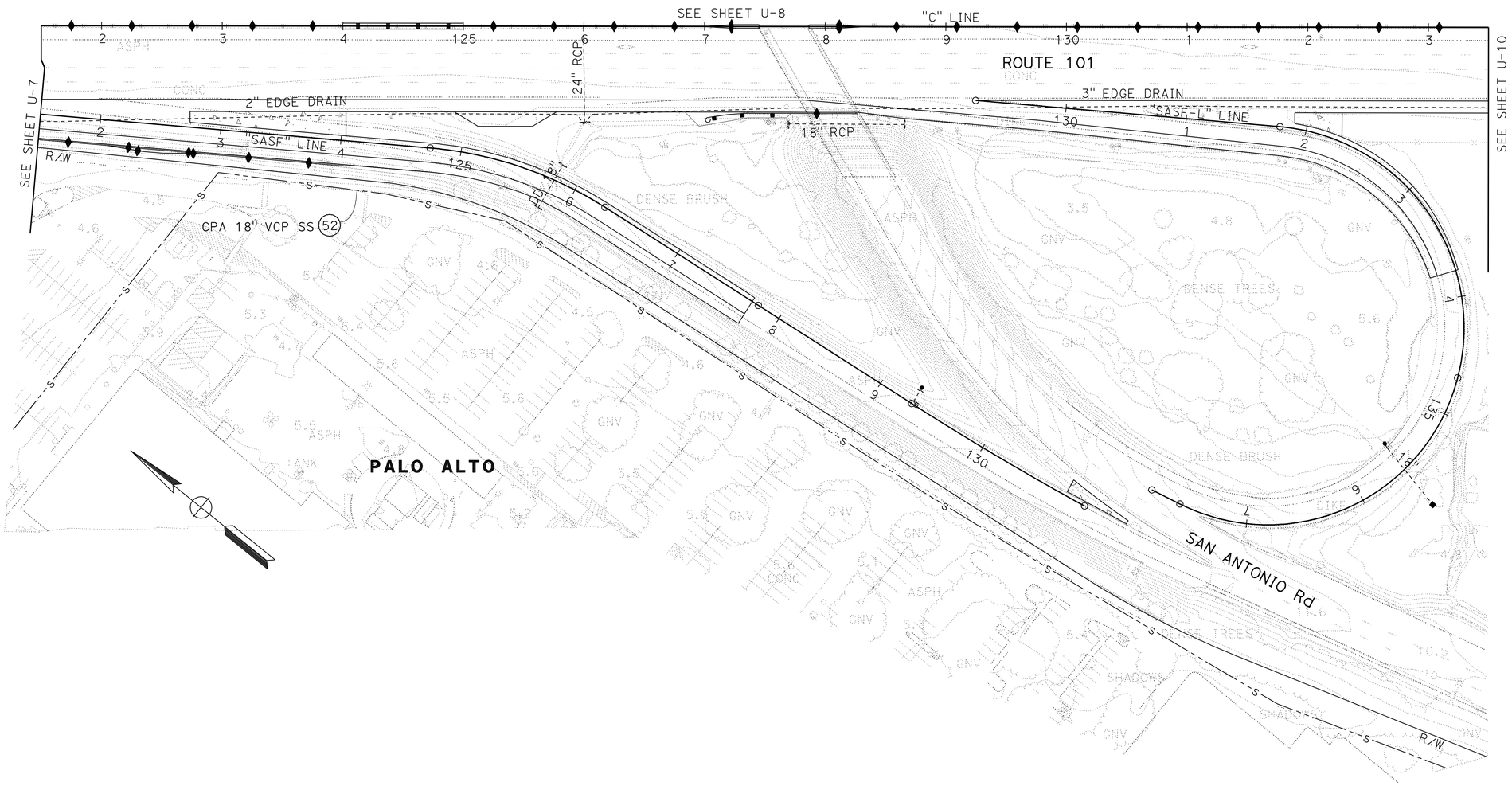

FOR NOTES, ABBREVIATIONS AND LEGEND SEE SHEET U-1

THIS PLAN ACCURATE FOR UTILITY INFORMATION ONLY

UTILITY PLAN

SCALE: 1" = 50'

U-9

STATE OF CALIFORNIA - DEPARTMENT OF TRANSPORTATION
Caltrans

CONSULTANT FUNCTIONAL SUPERVISOR: CHRISTOPHER LILLIE
CALCULATED-DESIGNED BY: SARAH CHRISTENSEN
CHECKED BY: LAN HO
REVISED BY: S C
DATE REVISED: 05/12/11

LAST REVISION 05-12-11 | DATE PLOTTED => 15-JUL-2011 | TIME PLOTTED => 13:14

BORDER LAST REVISED 7/2/2010 | USERNAME => trmartin | DGN FILE => 0400001126ka009.dgn | RELATIVE BORDER SCALE IS IN INCHES 0 1 2 3 | UNIT 0712 | PROJECT NUMBER & PHASE 04000011261

Dist	COUNTY	ROUTE	POST MILES TOTAL PROJECT	SHEET No.	TOTAL SHEETS
04	SCI	101	48.7/52.0	353	993

REGISTERED CIVIL ENGINEER 05/13/11 DATE

7-11-11
PLANS APPROVAL DATE

REGISTERED PROFESSIONAL ENGINEER Christopher Lillie No. C61288 Exp. 06/30/11 CIVIL STATE OF CALIFORNIA

THE STATE OF CALIFORNIA OR ITS OFFICERS OR AGENTS SHALL NOT BE RESPONSIBLE FOR THE ACCURACY OR COMPLETENESS OF SCANNED COPIES OF THIS PLAN SHEET.

URS Corporation
100 W San Fernando St
Suite 200
San Jose, CA 95113

Santa Clara Valley
Transportation Authority
3331 N First Street
San Jose, CA 95134

NOTE:

FOR ACCURATE RIGHT OF WAY DATA, CONTACT RIGHT OF WAY ENGINEERING AT THE DISTRICT OFFICE.

UTILITY LOCATIONS

POTHOLE LOCATION	COORDINATE N	COORDINATE E	GROUND Elev	DEPTH	TYPE	SIZE (in)	OWNER
T17	1981428.09	6097570.96	6.66	7.83	TEL	-	AT&T
T18	1981327.20	6097463.94	8.55	8.75	TEL	-	AT&T

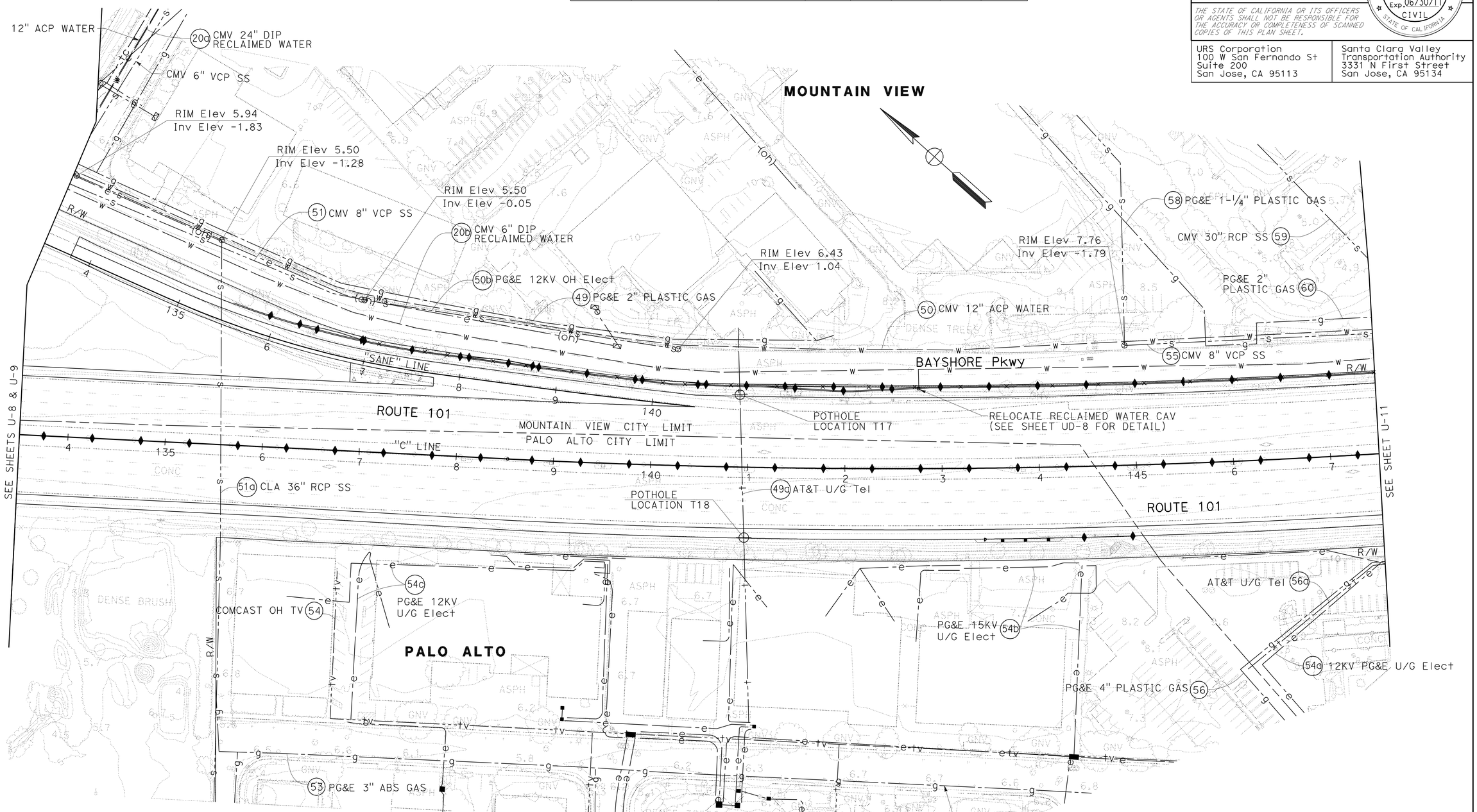

FOR NOTES, ABBREVIATIONS AND LEGEND SEE SHEET U-1

UTILITY PLAN

SCALE: 1" = 50'

U-10

THIS PLAN ACCURATE FOR UTILITY INFORMATION ONLY

STATE OF CALIFORNIA - DEPARTMENT OF TRANSPORTATION

Caltrans

CONSULTANT FUNCTIONAL SUPERVISOR: CHRISTOPHER LILLIE

CALCULATED-DESIGNED BY: SARAH CHRISTENSEN

CHECKED BY: LAN HO

REVISED BY: S C

DATE REVISED: 05/12/11

LAST REVISION 05-12-11 DATE PLOTTED => 15-JUL-2011 TIME PLOTTED => 13:14

Dist	COUNTY	ROUTE	POST MILES TOTAL PROJECT	SHEET No.	TOTAL SHEETS
04	SCI	101	48.7/52.0	354	993

REGISTERED CIVIL ENGINEER 01/31/11 DATE

7-11-11
PLANS APPROVAL DATE

REGISTERED PROFESSIONAL ENGINEER Christopher Lillie No. C61288 Exp. 06/30/11 CIVIL STATE OF CALIFORNIA

THE STATE OF CALIFORNIA OR ITS OFFICERS OR AGENTS SHALL NOT BE RESPONSIBLE FOR THE ACCURACY OR COMPLETENESS OF SCANNED COPIES OF THIS PLAN SHEET.

URS Corporation
100 W San Fernando St
Suite 200
San Jose, CA 95113

Santa Clara Valley
Transportation Authority
3331 N First Street
San Jose, CA 95134

NOTE:

FOR ACCURATE RIGHT OF WAY DATA, CONTACT RIGHT OF WAY ENGINEERING AT THE DISTRICT OFFICE.

UTILITY LOCATIONS

POTHOLE LOCATION	COORDINATE N	COORDINATE E	GROUND Elev	DEPTH	TYPE	SIZE (in)	OWNER
G15	1980165.57	6098936.09	9.42	4.83	GAS	34.0	PG&E
G16	1980134.75	6098934.34	10.08	6.00	GAS	34.0	PG&E
G17	1980087.02	6098931.44	9.00	4.33	GAS	34.0	PG&E
G18	1979889.54	6098909.00	5.92	7.00	GAS	34.0	PG&E
W18	1980165.65	6098957.23	9.24	6.75	WATER	14.0	CMV
W19	1980133.26	6098953.50	9.47	6.92	WATER	14.0	CMV
W20	1980072.00	6098946.99	9.32	6.00	WATER	14.0	CMV

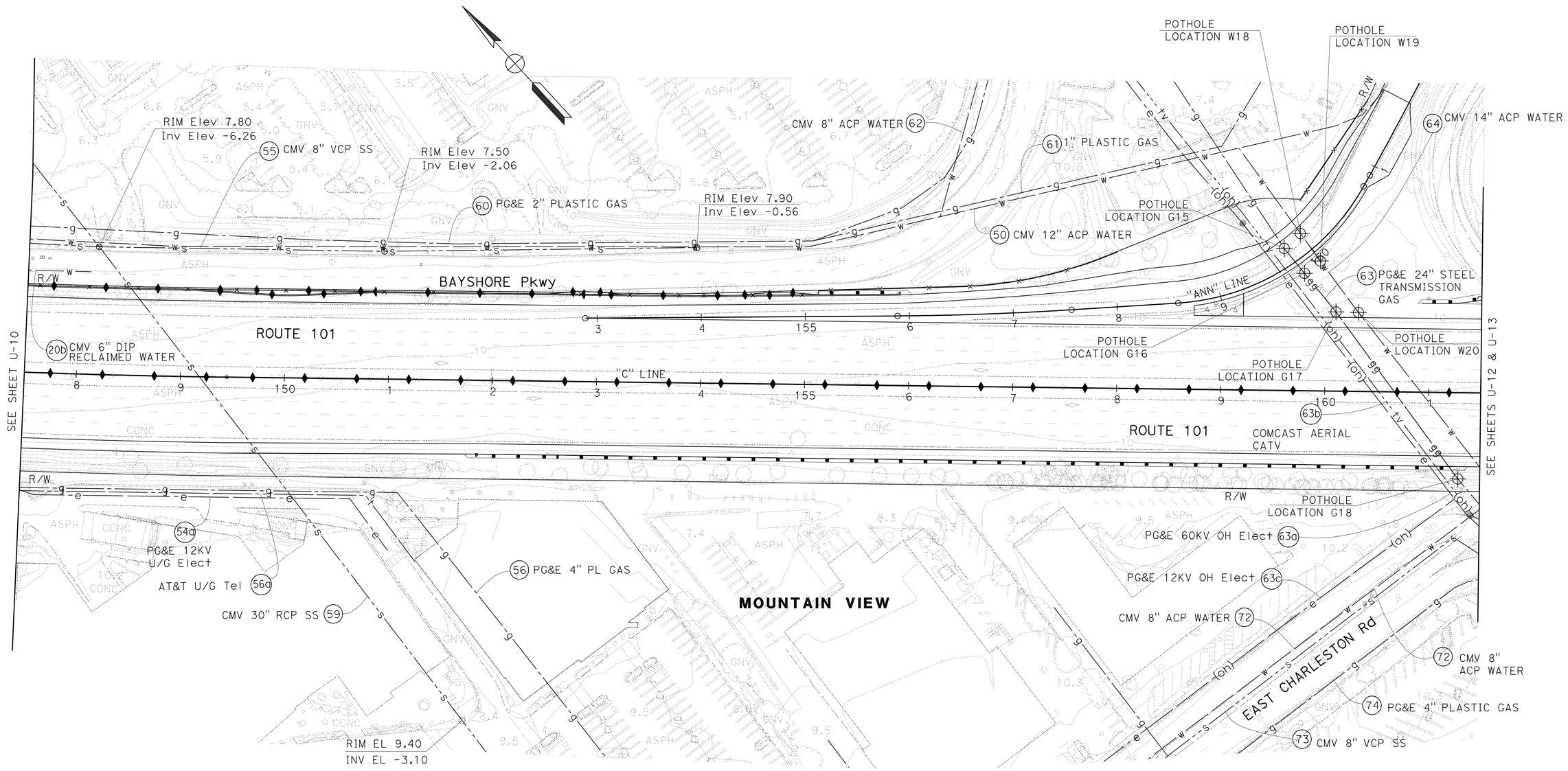

FOR NOTES, ABBREVIATIONS AND LEGEND SEE SHEET U-1

UTILITY PLAN

SCALE: 1" = 50'

U-11

THIS PLAN ACCURATE FOR UTILITY INFORMATION ONLY

STATE OF CALIFORNIA - DEPARTMENT OF TRANSPORTATION

Caltrans

CONSULTANT FUNCTIONAL SUPERVISOR: CHRISTOPHER LILLIE

CALCULATED-DESIGNED BY: SARAH CHRISTENSEN | CHECKED BY: LAN HO

REVISED BY: S C | DATE REVISED: 01-24-11

LAST REVISION 01-24-11 | DATE PLOTTED => 15-JUL-2011 | TIME PLOTTED => 13:15

Dist	COUNTY	ROUTE	POST MILES TOTAL PROJECT	SHEET No.	TOTAL SHEETS
04	SCI	101	48.7/52.0	355	993

REGISTERED CIVIL ENGINEER 01/31/11 DATE

7-11-11
PLANS APPROVAL DATE

REGISTERED PROFESSIONAL ENGINEER Christopher Lillie No. C61288 Exp. 06/30/11 CIVIL STATE OF CALIFORNIA

THE STATE OF CALIFORNIA OR ITS OFFICERS OR AGENTS SHALL NOT BE RESPONSIBLE FOR THE ACCURACY OR COMPLETENESS OF SCANNED COPIES OF THIS PLAN SHEET.

URS Corporation
100 W San Fernando St
Suite 200
San Jose, CA 95113

Santa Clara Valley
Transportation Authority
3331 N First Street
San Jose, CA 95134

NOTE:

FOR ACCURATE RIGHT OF WAY DATA, CONTACT
RIGHT OF WAY ENGINEERING AT THE DISTRICT OFFICE.

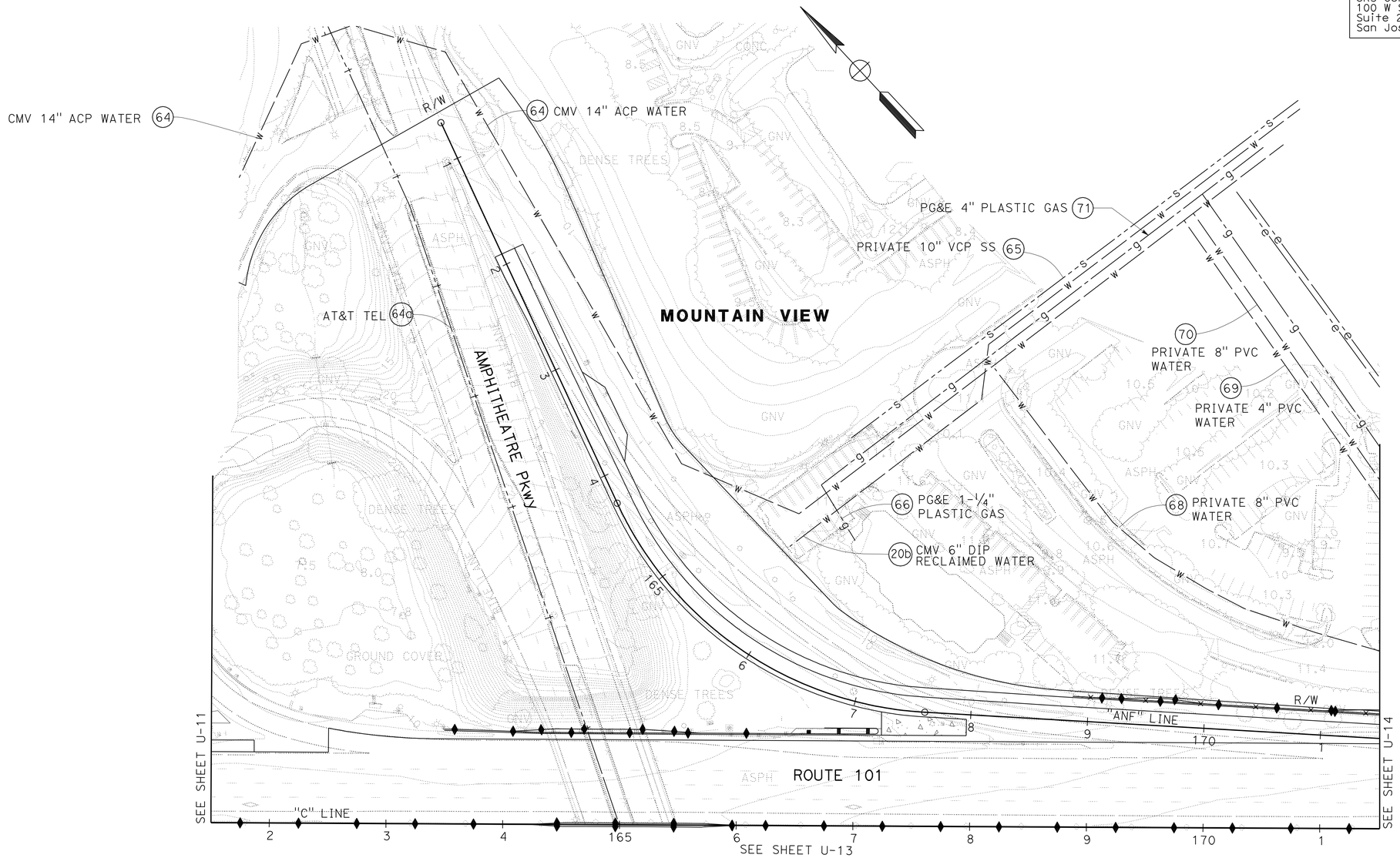

FOR NOTES, ABBREVIATIONS AND LEGEND SEE SHEET U-1

UTILITY PLAN

SCALE: 1" = 50'

U-12

THIS PLAN ACCURATE FOR UTILITY INFORMATION ONLY

STATE OF CALIFORNIA - DEPARTMENT OF TRANSPORTATION

Caltrans

CONSULTANT FUNCTIONAL SUPERVISOR: CHRISTOPHER LILLIE

CALCULATED-DESIGNED BY: SARAH CHRISTENSEN

CHECKED BY: LAN HO

REVISED BY: S C

DATE REVISED: 01/24/11

LAST REVISION 01/24/11

DATE PLOTTED => 15-JUL-2011
TIME PLOTTED => 13:15

Dist	COUNTY	ROUTE	POST MILES TOTAL PROJECT	SHEET No.	TOTAL SHEETS
04	SCI	101	48.7/52.0	356	993

REGISTERED CIVIL ENGINEER 01/31/11 DATE

7-11-11
PLANS APPROVAL DATE

REGISTERED PROFESSIONAL ENGINEER Christopher Lillie No. C61288 Exp. 06/30/11 CIVIL STATE OF CALIFORNIA

THE STATE OF CALIFORNIA OR ITS OFFICERS OR AGENTS SHALL NOT BE RESPONSIBLE FOR THE ACCURACY OR COMPLETENESS OF SCANNED COPIES OF THIS PLAN SHEET.

URS Corporation
100 W San Fernando St
Suite 200
San Jose, CA 95113

Santa Clara Valley
Transportation Authority
3331 N First Street
San Jose, CA 95134

NOTE:

FOR ACCURATE RIGHT OF WAY DATA, CONTACT
RIGHT OF WAY ENGINEERING AT THE DISTRICT OFFICE.

UTILITY LOCATIONS

POTHOLE LOCATION	COORDINATE N	COORDINATE E	GROUND Elev	DEPTH	TYPE	SIZE (in)	OWNER
W21	1979870.50	6098931.15	6.56	2.50	WATER	14.0	CMV

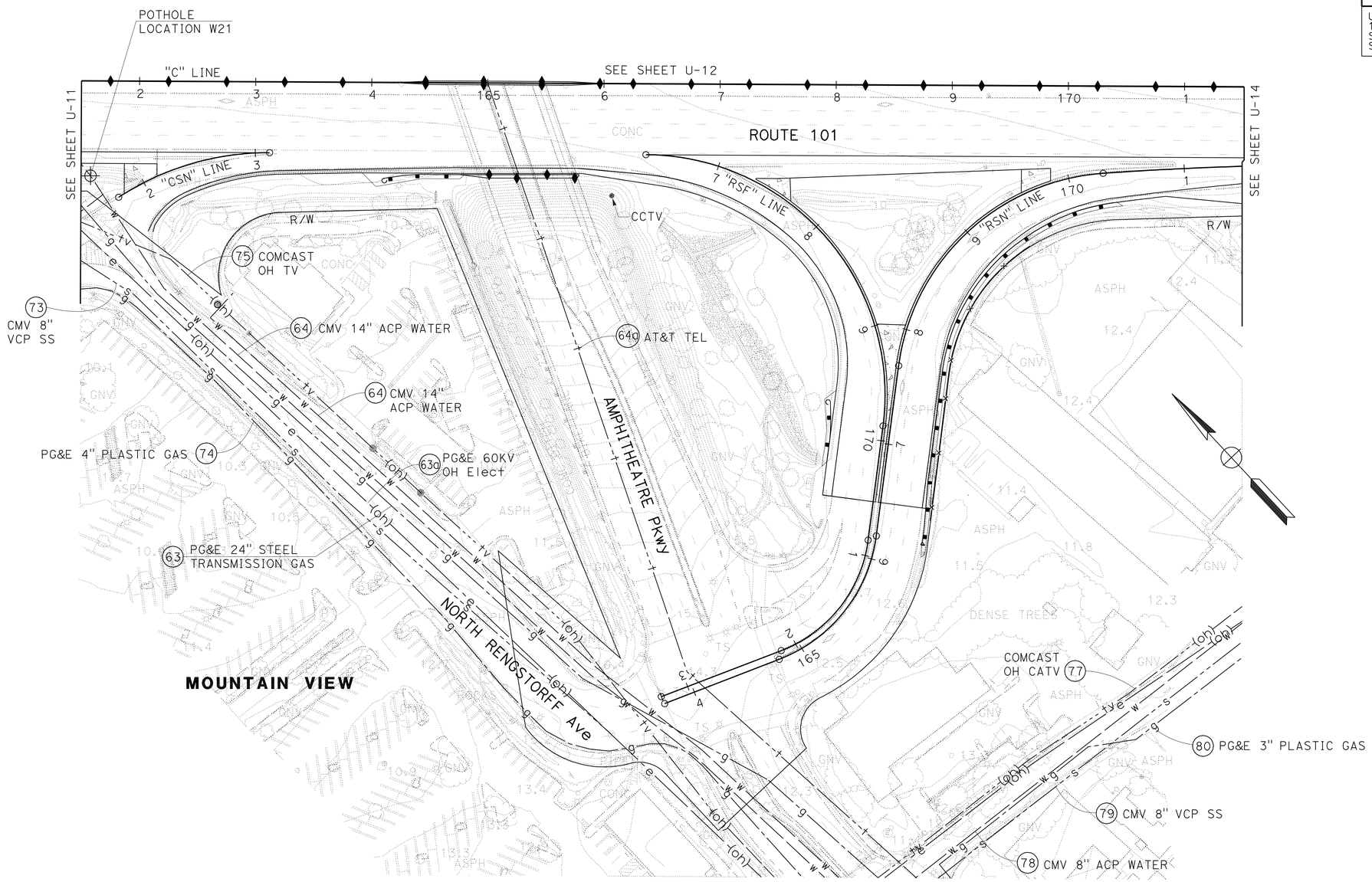

FOR NOTES, ABBREVIATIONS AND LEGEND SEE SHEET U-1

THIS PLAN ACCURATE FOR UTILITY INFORMATION ONLY

UTILITY PLAN

SCALE: 1" = 50'

U-13

STATE OF CALIFORNIA - DEPARTMENT OF TRANSPORTATION

Caltrans

CONSULTANT FUNCTIONAL SUPERVISOR: CHRISTOPHER LILLIE

CALCULATED-DESIGNED BY: SARAH CHRISTENSEN

CHECKED BY: LAN HO

REVISED BY: S C

DATE REVISED: 01/24/11

LAST REVISION 01/24/11 DATE PLOTTED => 15-JUL-2011 TIME PLOTTED => 13:15

Dist	COUNTY	ROUTE	POST MILES TOTAL PROJECT	SHEET No.	TOTAL SHEETS
04	SCI	101	48.7/52.0	357	993

REGISTERED CIVIL ENGINEER 01/31/11 DATE

7-11-11
PLANS APPROVAL DATE

REGISTERED PROFESSIONAL ENGINEER Christopher Lillie No. C61288 Exp. 06/30/11 CIVIL STATE OF CALIFORNIA

THE STATE OF CALIFORNIA OR ITS OFFICERS OR AGENTS SHALL NOT BE RESPONSIBLE FOR THE ACCURACY OR COMPLETENESS OF SCANNED COPIES OF THIS PLAN SHEET.

URS Corporation
100 W San Fernando St
Suite 200
San Jose, CA 95113

Santa Clara Valley
Transportation Authority
3331 N First Street
San Jose, CA 95134

NOTE:

FOR ACCURATE RIGHT OF WAY DATA, CONTACT
RIGHT OF WAY ENGINEERING AT THE DISTRICT OFFICE.

UTILITY LOCATIONS

POTHOLE LOCATION	COORDINATE N	COORDINATE E	GROUND Elev	DEPTH	TYPE	SIZE (in)	OWNER
GP14	1978844.91	6099998.86	12.91	3.33	GAS	1.0	PG&E
T15	1979011.95	6100069.74	14.43	8.33	TEL	-	AT&T
T16	1978901.43	6099971.83	14.76	6.83	TEL	-	AT&T
G19	1978978.41	6100104.02	14.90	6.25	GAS	4.0	PG&E
G20	1978871.90	6100002.55	14.63	5.58	GAS	4.0	PG&E
G21	1978272.48	6100633.94	19.41	5.08	GAS	3.0	PG&E
G22	1978384.40	6100740.14	19.76	5.33	GAS	3.0	PG&E

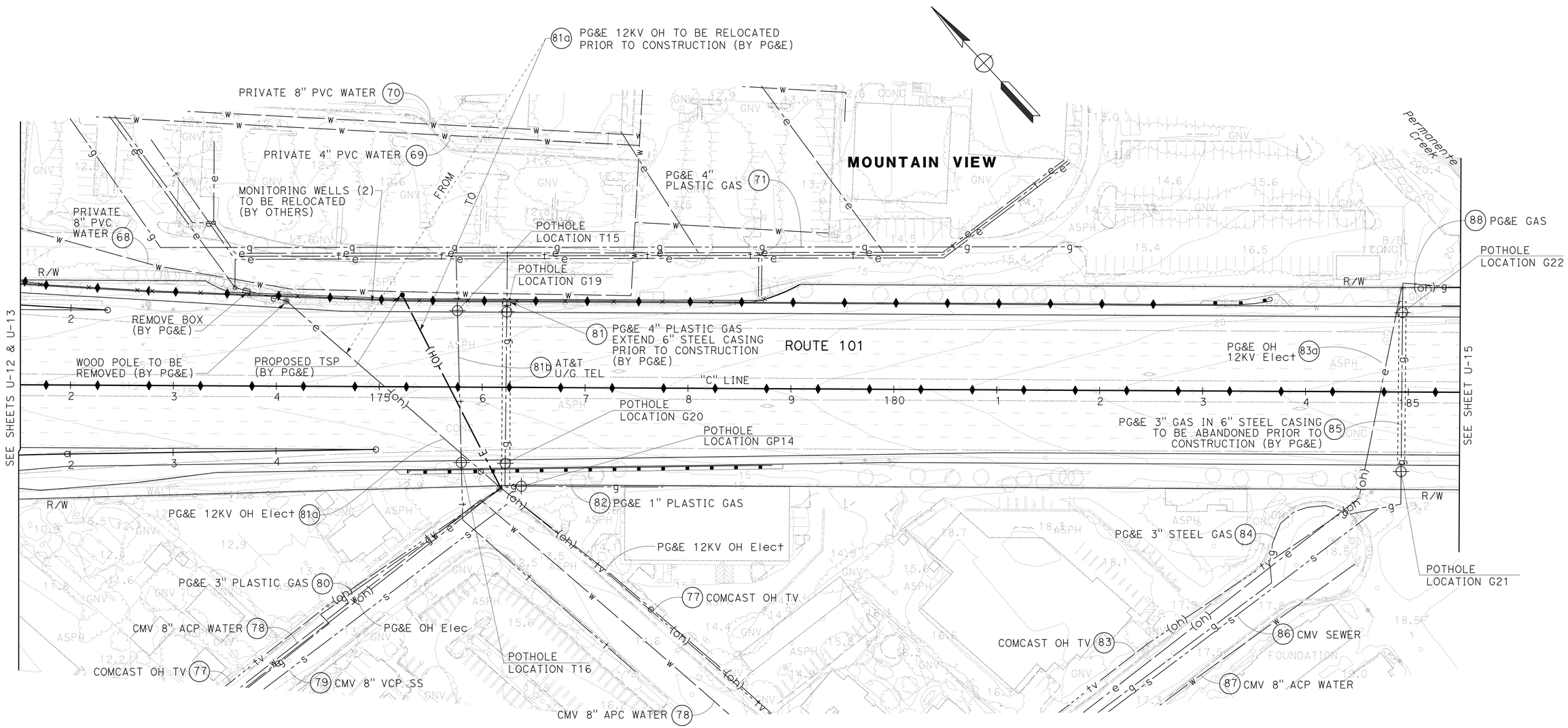

FOR NOTES, ABBREVIATIONS AND LEGEND SEE SHEET U-1

UTILITY PLAN

SCALE: 1" = 50'

U-14

THIS PLAN ACCURATE FOR UTILITY INFORMATION ONLY

STATE OF CALIFORNIA - DEPARTMENT OF TRANSPORTATION

Caltrans

CONSULTANT FUNCTIONAL SUPERVISOR: CHRISTOPHER LILLIE

CALCULATED-DESIGNED BY: SARAH CHRISTENSEN | CHECKED BY: LAN HO

REVISED BY: S C | DATE REVISED: 01/24/11

LAST REVISION 01-24-11 | DATE PLOTTED => 15-JUL-2011 | TIME PLOTTED => 13:15

Dist	COUNTY	ROUTE	POST MILES TOTAL PROJECT	SHEET No.	TOTAL SHEETS
04	SCI	101	48.7/52.0	358	993

REGISTERED CIVIL ENGINEER 01/31/11 DATE

7-11-11
PLANS APPROVAL DATE

REGISTERED PROFESSIONAL ENGINEER Christopher Lillie No. C61288 Exp. 06/30/11 CIVIL STATE OF CALIFORNIA

THE STATE OF CALIFORNIA OR ITS OFFICERS OR AGENTS SHALL NOT BE RESPONSIBLE FOR THE ACCURACY OR COMPLETENESS OF SCANNED COPIES OF THIS PLAN SHEET.

URS Corporation
100 W San Fernando St
Suite 200
San Jose, CA 95113

Santa Clara Valley
Transportation Authority
3331 N First Street
San Jose, CA 95134

NOTE:

FOR ACCURATE RIGHT OF WAY DATA, CONTACT
RIGHT OF WAY ENGINEERING AT THE DISTRICT OFFICE.

UTILITY LOCATIONS

POTHOLE LOCATION	COORDINATE N	COORDINATE E	GROUND Elev	DEPTH	TYPE	SIZE (in)	OWNER
W25	1977931.69	6101248.89	20.47	3.17	WATER	14.0	CMV
G23	1978316.27	6100840.98	19.18	3.42	GAS	4.0	PG&E
G24	1978260.12	6100862.03	20.87	2.00	GAS	4.0	PG&E
G25	1978256.63	6100906.38	19.79	3.50	GAS	4.0	PG&E

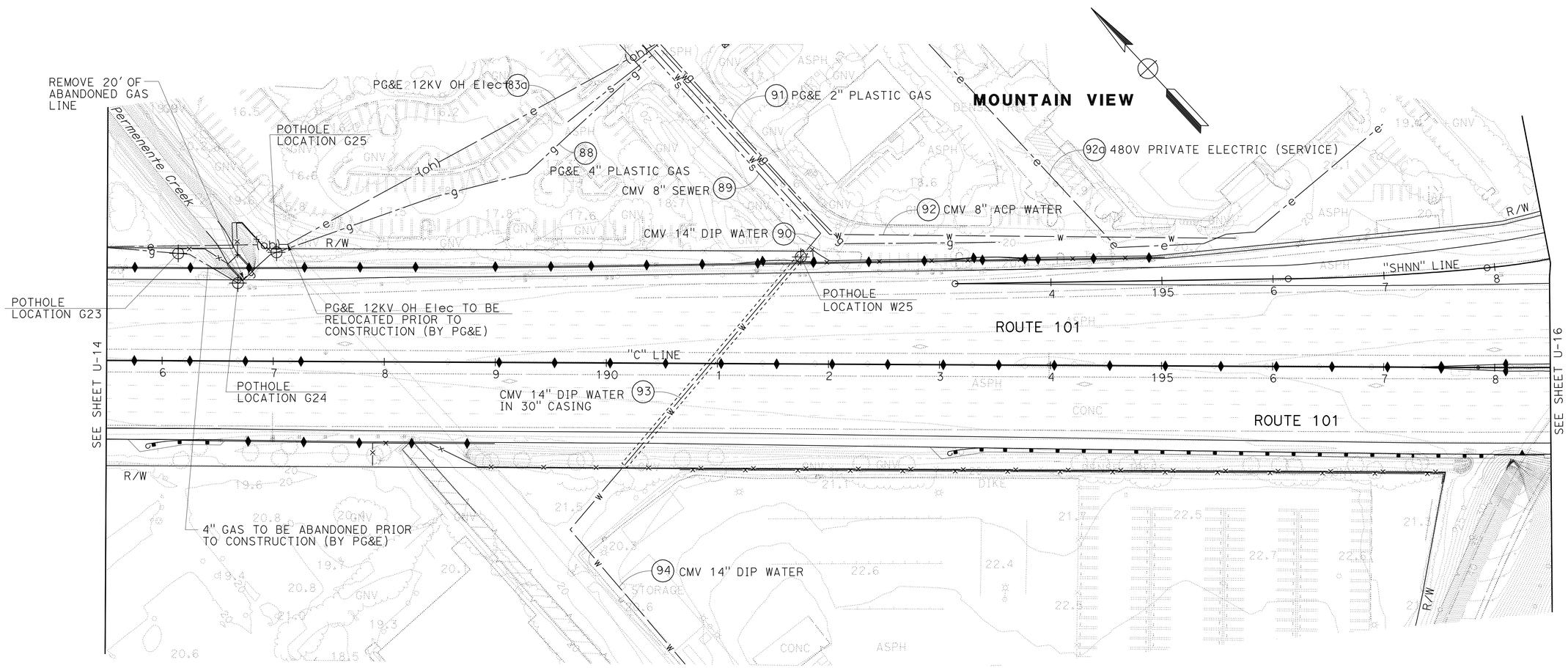

FOR NOTES, ABBREVIATIONS AND LEGEND SEE SHEET U-1

THIS PLAN ACCURATE FOR UTILITY INFORMATION ONLY

UTILITY PLAN

SCALE: 1" = 50'

U-15

STATE OF CALIFORNIA - DEPARTMENT OF TRANSPORTATION

Caltrans

CONSULTANT FUNCTIONAL SUPERVISOR: CHRISTOPHER LILLIE

CALCULATED-DESIGNED BY: SARAH CHRISTENSEN | CHECKED BY: LAN HO

REVISED BY: S C | DATE REVISED: 01/24/11

LAST REVISION 01-24-11 | DATE PLOTTED => 15-JUL-2011 | TIME PLOTTED => 13:15

Dist	COUNTY	ROUTE	POST MILES TOTAL PROJECT	SHEET No.	TOTAL SHEETS
04	SCI	101	48.7/52.0	359	993

REGISTERED CIVIL ENGINEER 01/31/11 DATE

7-11-11
PLANS APPROVAL DATE

REGISTERED PROFESSIONAL ENGINEER Christopher Lillie No. C61288 Exp. 06/30/11 CIVIL STATE OF CALIFORNIA

THE STATE OF CALIFORNIA OR ITS OFFICERS OR AGENTS SHALL NOT BE RESPONSIBLE FOR THE ACCURACY OR COMPLETENESS OF SCANNED COPIES OF THIS PLAN SHEET.

URS Corporation
100 W San Fernando St
Suite 200
San Jose, CA 95113

Santa Clara Valley
Transportation Authority
3331 N First Street
San Jose, CA 95134

NOTE:

FOR ACCURATE RIGHT OF WAY DATA, CONTACT
RIGHT OF WAY ENGINEERING AT THE DISTRICT OFFICE.

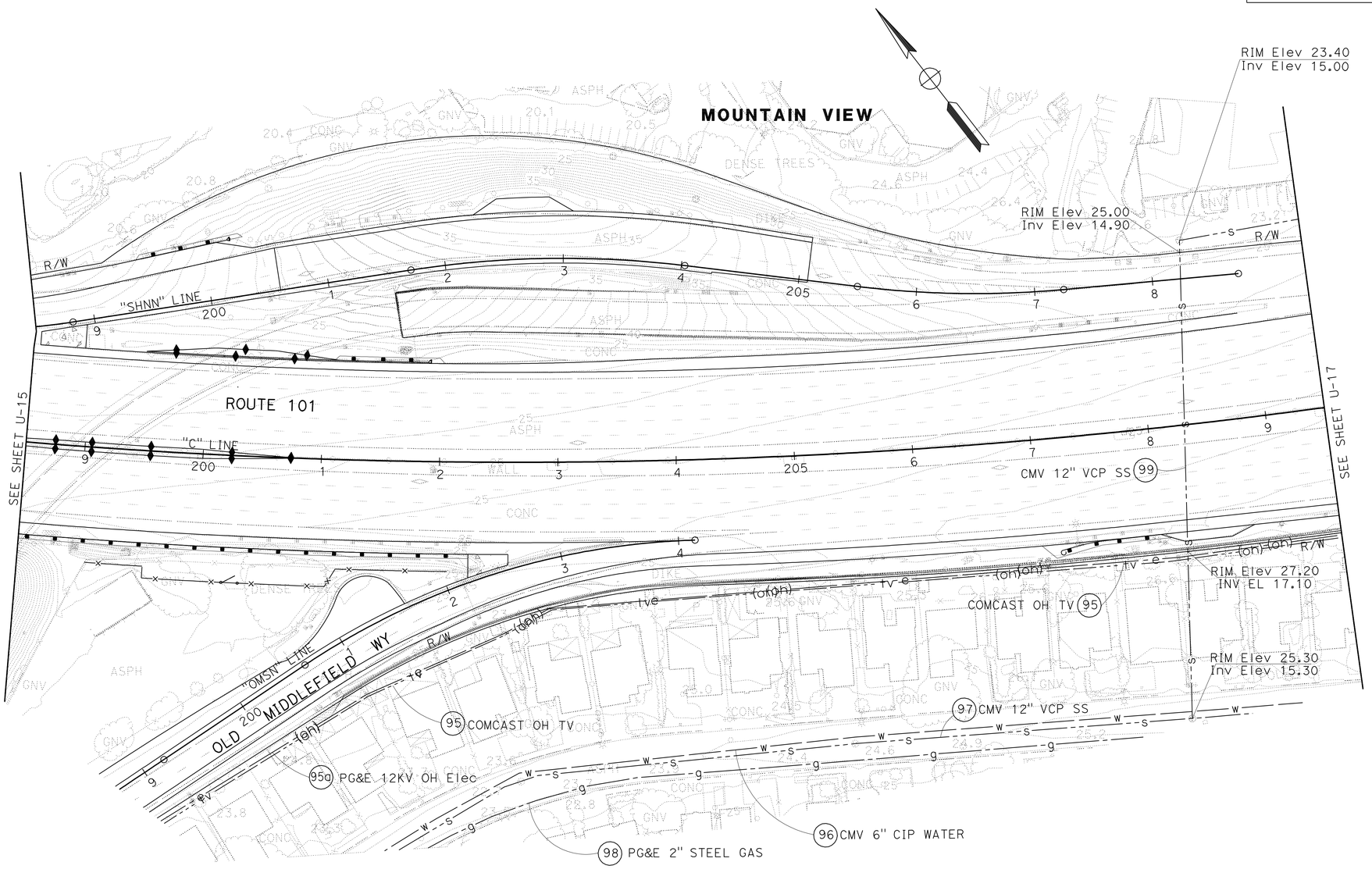

FOR NOTES, ABBREVIATIONS AND LEGEND SEE SHEET U-1

THIS PLAN ACCURATE FOR UTILITY INFORMATION ONLY

UTILITY PLAN

SCALE: 1" = 50'

U-16

STATE OF CALIFORNIA - DEPARTMENT OF TRANSPORTATION

Caltrans

CONSULTANT FUNCTIONAL SUPERVISOR: CHRISTOPHER LILLIE

CALCULATED-DESIGNED BY: SARAH CHRISTENSEN

CHECKED BY: LAN HO

REVISED BY: S C

DATE REVISED: 01/24/11

LAST REVISION DATE PLOTTED => 15-JUL-2011
01-24-11 TIME PLOTTED => 13:16

BORDER LAST REVISED 7/2/2010

USERNAME => trmartin
DGN FILE => 0400001126ka016.dgn

RELATIVE BORDER SCALE IS IN INCHES 0 1 2 3

UNIT 0712

PROJECT NUMBER & PHASE 04000011261

Dist	COUNTY	ROUTE	POST MILES TOTAL PROJECT	SHEET No.	TOTAL SHEETS
04	SCI	101	48.7/52.0	360	993

REGISTERED CIVIL ENGINEER 01/31/11 DATE

7-11-11
PLANS APPROVAL DATE

REGISTERED PROFESSIONAL ENGINEER Christopher Lillie No. C61288 Exp. 06/30/11 CIVIL STATE OF CALIFORNIA

THE STATE OF CALIFORNIA OR ITS OFFICERS OR AGENTS SHALL NOT BE RESPONSIBLE FOR THE ACCURACY OR COMPLETENESS OF SCANNED COPIES OF THIS PLAN SHEET.

URS Corporation
100 W San Fernando St
Suite 200
San Jose, CA 95113

Santa Clara Valley
Transportation Authority
3331 N First Street
San Jose, CA 95134

NOTE:

FOR ACCURATE RIGHT OF WAY DATA, CONTACT
RIGHT OF WAY ENGINEERING AT THE DISTRICT OFFICE.

UTILITY LOCATIONS

POTHOLE LOCATION	COORDINATE N	COORDINATE E	GROUND Elev	DEPTH	TYPE	SIZE (in)	OWNER
E20	1976607.32	6102600.75	27.46	1.00	ELEC	-	CALTRANS
E21	1976553.02	6102700.01	27.72	1.00	ELEC	-	CALTRANS
E22	1976490.31	6102801.34	27.75	1.00	ELEC	-	CALTRANS
G26	1976701.36	6102956.36	26.75	8.00	GAS	8.0	PG&E
G27	1976477.35	6102829.92	27.87	5.67	GAS	8.0	PG&E

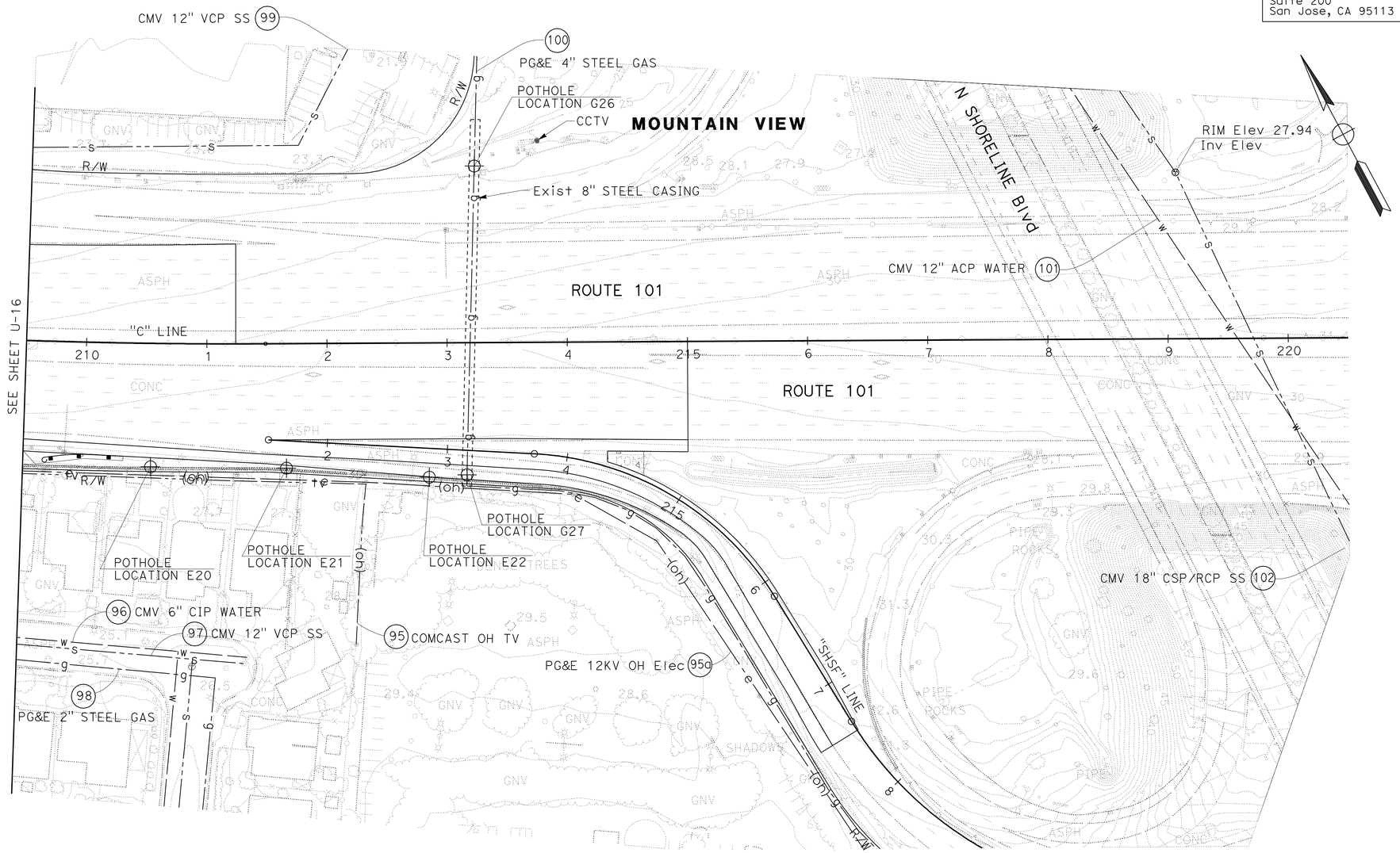

FOR NOTES, ABBREVIATIONS AND LEGEND SEE SHEET U-1.

THIS PLAN ACCURATE FOR UTILITY INFORMATION ONLY

UTILITY PLAN

SCALE: 1" = 50'

U-17

STATE OF CALIFORNIA - DEPARTMENT OF TRANSPORTATION

Caltrans

CONSULTANT FUNCTIONAL SUPERVISOR: CHRISTOPHER LILLIE

CALCULATED-DESIGNED BY: SARAH CHRISTENSEN

CHECKED BY: LAN HO

REVISED BY: S C

DATE REVISED: 01/24/11

LAST REVISION 01/24/11 | DATE PLOTTED => 15-JUL-2011 | TIME PLOTTED => 13:16

Dist	COUNTY	ROUTE	POST MILES TOTAL PROJECT	SHEET No.	TOTAL SHEETS
04	SCI	101	48.7/52.0	361	993

REGISTERED CIVIL ENGINEER 05/13/11 DATE

7-11-11
PLANS APPROVAL DATE

REGISTERED PROFESSIONAL ENGINEER Christopher Lillie No. C61288 Exp. 06/30/11 CIVIL STATE OF CALIFORNIA

THE STATE OF CALIFORNIA OR ITS OFFICERS OR AGENTS SHALL NOT BE RESPONSIBLE FOR THE ACCURACY OR COMPLETENESS OF SCANNED COPIES OF THIS PLAN SHEET.

URS Corporation
100 W San Fernando St
Suite 200
San Jose, CA 95113

Santa Clara Valley
Transportation Authority
3331 N First Street
San Jose, CA 95134

NOTE:

FOR ACCURATE RIGHT OF WAY DATA, CONTACT
RIGHT OF WAY ENGINEERING AT THE DISTRICT OFFICE.

UTILITY INFORMATION

UTILITY No.	SHEET No.	OWNER	UTILITY DESCRIPTION	DIRECTION	LOCATION
9	U-1	CITY OF PALO ALTO	8" TRANSITION WATER	TR	"C" 33+50
9a	U-1	CITY OF PALO ALTO	OH ELECTRICAL, 25KV	TR	"C" 34+20
10	U-1	CITY OF PALO ALTO	16" CSP WATER in 24" CMP CASING	TR	"C" 34+10
11	U-1	CITY OF PALO ALTO	12" GAS	TR	"C" 34+20
12	U-1	COMCAST	OH CATV	TR	"C" 34+20
13	U-1	CITY OF PALO ALTO	24" CSP SS in 36" CASING	TR	"C" 36+30
14	U-1	PG&E	8" GAS	TR	"C" 36+80
15	U-1	CITY OF PALO ALTO	21" CSP SS	-	OREGON Exp (WEST) INTERCHANGE
15a	U-1	CITY OF PALO ALTO	15" VCP SS	-	OREGON Exp (WEST) INTERCHANGE
16	U-1, U-2, U-3, U-4, U-5, U-6, U-7	CITY OF PALO ALTO	8" ACP WATER	PA	"C" 35+00 TO 119+00 WEST BAYSHORE Rd
17	U-1, U-2, U-3, U-4, U-5, U-6, U-7	CITY OF PALO ALTO	4" PE GAS	PA	"C" 37+00 TO 119+00 WEST BAYSHORE Rd
18	U-1, U-2, U-3, U-4, U-5, U-6, U-7, U-8	PG&E	34" STEEL TRANSMISSION GAS	PA	EMBARCADERO Rd INTERCHANGE TO SAN ANTONIO Ave INTERCHANGE, EAST OF NB 101
18a	U-2	PG&E	OH ELECTRICAL 115KV Transmission	TR	"C" 54+00
19	U-2	CITY OF PALO ALTO	15" VCP SEWER	TR	"C" 49+60
20	U-2, U-3, U-4, U-5, U-6, U-7, U-8	CITY OF PALO ALTO	10" ACP WATER	PA	EMBARCADERO Rd INTERCHANGE TO SAN ANTONIO Ave INTERCHANGE, EAST OF NB 101
20a	U-2, U-3, U-4, U-5, U-6, U-7, U-8, U-10, U-11	CPA/CMV	20", 24" & 30" DIP RECLAIMED WATER LINE	PA	EMBARCADERO Rd INTERCHANGE TO SAN ANTONIO Ave INTERCHANGE, EAST OF NB 101
20b	U-10, U-11, U-12	CMV	6" DIP RECYCLED WATER LINE	PA	SAN ANTONIO Ave INTERCHANGE TO "C" 148+00, EAST OF NB 101
21	U-2, U-3, U-4, U-5	COMCAST	U/G CATV	PA	EMBARCADERO Rd INTERCHANGE TO "C" 87+50, EAST OF NB 101
22	U-2, U-3, U-4, U-5, U-6, U-7	CITY OF PALO ALTO	18" VCP SEWER	PA	EMBARCADERO Rd INTERCHANGE TO "C" 116+00, EAST OF NB 101
23	U-2, U-3, U-4, U-5	CITY OF PALO ALTO	4" ABS GAS	PA	EMBARCADERO Rd INTERCHANGE TO "C" 71+70, EAST OF NB 101
24	U-2, U-3, U-4	AT&T	U/G TELEPHONE	PA	AMARILLO Ave TO "C" 116+00, EAST OF NB 101
24a	U-2, U-3, U-4	PG&E	OH ELECTRICAL, 115kV TRANSMISSION	PA	EAST OF NB 101 FROM AMARILLO TO "C" 76+00
24b	U-2, U-3	CITY OF PALO ALTO	U/G ELECTRICAL, 15kV	PA	EAST OF NB 101 FROM AMARILLO TO "C" 68+30
24c	U-2, U-3	CITY OF PALO ALTO	U/G COMMUNICATION	PA	EAST OF NB 101 FROM AMARILLO TO "C" 68+30
25	U-2	AT&T	U/G TELEPHONE	TR	"C" 49+80
25a	U-2, U-3, U-4, U-5, U-6, U-7, U-8	MCI	U/G TELEPHONE COMM	PA	"C" 50+00 TO 124+50 ON EAST BAYSHORE Rd
26	U-2, U-3, U-4, U-5, U-6, U-7	NEXTLINK	COMM 2-4" HDPE CONDUITS, (12" FROM FACE OF CURB)	PA	AMARILLO Ave TO FABIAN Wy, WEST BAYSHORE Rd
26a	U-2, U-3, U-4, U-5, U-6, U-7	CITY OF PALO ALTO	U/G ELECTRICAL, 15kV	PA	AMARILLO Ave TO FABIAN Wy, WEST BAYSHORE Rd
27	U-2	CITY OF PALO ALTO	36" RCP SS	TR	"C" 49+80
28	U-2	CITY OF PALO ALTO	42" RCP SS	TR	"C" 49+50
28a	U-2	CITY OF PALO ALTO	U/G ELECTRICAL, 15kV	TR	"C" 49+40
28b	U-2	CITY OF PALO ALTO	U/G ELECTRICAL, 15kV	TR	"C" 49+70
29	U-2	CITY OF PALO ALTO	WATER	TR	"C" 49+40
30	U-2	AT&T	U/G TELEPHONE	TR	"C" 49+30
31	U-2, U-3	AT&T	U/G TELEPHONE, 2"-4" HDPE, (12" FROM FACE OF CURB)	PA	AMARILLO Ave TO "C" 68+00, WEST OF SB 101
32	U-3, U-4	AT&T	U/G TELEPHONE	PA	"C" 68+50 TO 80+00 on EAST BAYSHORE Rd
32a	U-3	CITY OF PALO ALTO	U/G ELECTRICAL, 15kV	TR	"C" 68+30
32b	U-3, U-4, U-5, U-6, U-7, U-8	CITY OF PALO ALTO	U/G ELECTRICAL, 15kV	PA	"C" 68+70 TO SAN ANTONIO Rd, EAST OF NB LANE
32c	U-3	AT&T	U/G TELEPHONE	TR	"C" 68+50
32d	U-3, U-4	CPA	U/G COMMUNICATION	PA	"C" 68+40 TO 72+00
33	U-3, U-4	CITY OF PALO ALTO	8" DIP RECLAIMED WATER	TR	"C" 71+70
34	U-4, U-5, U-6, U-7	CITY OF PALO ALTO	8" VCP SS	PA	"C" 73+40 TO 104+80, WEST OF SB 101
35	U-4, U-5	CITY OF PALO ALTO	20" ABS GAS (ABANDONED)	PA	"C" 74+00 TO 86+70, EAST OF NB 101
36	U-4, U-5, U-6	COMCAST	U/G CATV	PA	"C" 81+60 TO 108+10, WEST OF SB 101
38	U-7	CITY OF PALO ALTO	4" BWP GAS, TO BE RELOCATED (BY CPA)	TR	"C" 110+10
38a	U-7	CITY OF PALO ALTO	U/G ELECTRICAL, 15kV in 5" STEEL CONDUIT	TR	"C" 110+10
38b	U-7	CITY OF PALO ALTO	OH ELECTRICAL, 15kV	PA	"C" 109+40 TO 114+50, EAST OF NB 101
38d	U-7	MCI	U/G TELEPHONE COMM	TR	"C" 113+50
39	U-7	CITY OF PALO ALTO	3" ABS GAS	PA	"C" 110+20 TO SAN ANTONIO INTERCHANGE, EAST OF NB 101
39a	U-7, U-8	CITY OF PALO ALTO	2" ABS GAS	PA	"C" 117+80 TO SAN ANTONIO ON E BAYSHORE Rd
38c	U-7	CITY OF PALO ALTO	U/G COMMUNICATION in 3" STEEL CONDUIT	TR	"C" 110+10

UTILITY PLAN

U-18

STATE OF CALIFORNIA - DEPARTMENT OF TRANSPORTATION
Caltrans

CONSULTANT FUNCTIONAL SUPERVISOR: CHRISTOPHER LILLIE
CALCULATED-DESIGNED BY: SARAH CHRISTENSEN
CHECKED BY: LAN HO
REVISED BY: S C
DATE REVISED: 05/12/11

LAST REVISION 05-12-11
DATE PLOTTED => 15-JUL-2011
TIME PLOTTED => 13:16

Dist	COUNTY	ROUTE	POST MILES TOTAL PROJECT	SHEET No.	TOTAL SHEETS
04	SCI	101	48.7/52.0	362	993

REGISTERED CIVIL ENGINEER 01/31/11 DATE

7-11-11
PLANS APPROVAL DATE

REGISTERED PROFESSIONAL ENGINEER Christopher Lillie No. C61288 Exp. 06/30/11 CIVIL STATE OF CALIFORNIA

THE STATE OF CALIFORNIA OR ITS OFFICERS OR AGENTS SHALL NOT BE RESPONSIBLE FOR THE ACCURACY OR COMPLETENESS OF SCANNED COPIES OF THIS PLAN SHEET.

URS Corporation
100 W San Fernando St
Suite 200
San Jose, CA 95113

Santa Clara Valley
Transportation Authority
3331 N First Street
San Jose, CA 95134

UTILITY INFORMATION

UTILITY No.	SHEET No.	OWNER	UTILITY DESCRIPTION	DIRECTION	LOCATION
40	U-7	COMCAST	OH CATV	TR	"C" 113+90
40a	U-7	CITY OF PALO ALTO	OH ELECTRICAL, 15 kV	-	"C" 114+50 TO 115+00, EAST OF NB 101
40b	U-7	COMCAST	OH CATV	PA	"C" 114+50 TO 115+00, EAST OF NB 101
40c	U-6, U-7	PG&E	OH ELECTRICAL, 60kV TRANSMISSION	TR	"C" 113+10
40d	U-7	COMCAST	U/G CATV	PA	"C" 118+00 ON E BAYSHORE Rd & CORPORATION Wy
41	U-7	CITY OF PALO ALTO	14" ACP WATER	TR	"C" 115+60
42	U-7	PG&E	30" STEEL GAS	PA	"C" 110+00 TO 114+80, EAST OF NB 101
43	U-7	CITY OF PALO ALTO	42" RCP SS	TR	"C" 115+60
44	U-7	CITY OF PALO ALTO	8" VCP SS	-	FABIAN Way
47	U-7	COMCAST	U/G CATV	-	FABIAN Way
49	U-8, U-10	PG&E	2" PLASTIC GAS	PA	BAYSHORE Pkwy TO "C" 141+90, EAST OF NB 101
49a	U-10	AT&T	U/G TELEPHONE	TR	"C" 141+00
50	U-8, U-10, U-11	CITY OF MOUNTAIN VIEW	12" ACP WATER	PA	BAYSHORE Pkwy TO "C" 159+40, EAST OF NB 101
50a	U-8	PG&E	OH ELECTRICAL, 12kV	PA	SAN ANTONIO Rd AND BAYSHORE Pkwy
50b	U-8, U-10	PG&E	OH ELECTRICAL, 12kV	PA	SAN ANTONIO Rd TO "C" 139+60, EAST OF NB 101
51	U-8, U-10	CITY OF MOUNTAIN VIEW	8" VCP SS	PA	BAYSHORE Pkwy NEAR SAN ANTONIO INTERCHANGE, EAST OF NB 101
51a	U-8, U-10	City OF Los AlTOs	36" RCP SS	TR	"C" 135+50
52	U-9	CITY OF PALO ALTO	18" VCP SS	PA	SAN ANTONIO INTERCHANGE, WEST OF SB 101
53	U-10	CITY OF PALO ALTO	3" ABS GAS	PA	"C" 136+00 TO 146+00, WEST OF SB 101
54	U-10	COMCAST	OH CATV	PA	"C" 136+80 TO 147+00, WEST OF SB 101
54a	U-10, U-11	PG&E	U/G ELECTRICAL, 12kV	-	WEST OF SB 101
54b	U-10	PG&E	U/G ELECTRICAL, 15kV	-	WEST OF SB 101
54c	U-10	PG&E	U/G ELECTRICAL, 12kV	PA	"C" 145+50 TO 147+50, WEST OF SB 101
55	U-10, U-11	CITY OF MOUNTAIN VIEW	8" VCP SS	PA	BAYSHORE Pkwy Exit TO "C" 142+00
56	U-10, U-11	PG&E	4" PLASTIC GAS	PA	"C" 147+60 TO 151+20, WEST OF SB 101
56a	U-10, U-11	AT&T	U/G TELEPHONE	PA	"C" 147+60 TO 151+20, WEST OF SB 101
58	U-10	PG&E	1¼" PLASTIC GAS	PA	"C" 145+70
59	U-10, U-11	CITY OF MOUNTAIN VIEW	30" RCP SS	TR	"C" 149+10
60	U-10, U-11	PG&E	2" PLASTIC GAS	PA	"C" 145+70 TO AMPHITHEATRE Pkwy INTERCHANGE, EAST OF NB 101
61	U-11	PG&E	1" PLASTIC GAS	PA	"C" 154+90, EAST OF NB 101
62	U-11	CITY OF MOUNTAIN VIEW	8" ACP WATER	PA	"C" 156+20, EAST OF NB 101
63	U-11, U-13	PG&E	24" STEEL TRANSMISSION GAS	TR	"C" 160+80
63a	U-11, U-13	PG&E	OH ELECTRICAL, 60kV	TR	"C" 160+20
63b	U-11, U-13	PG&E	OH ELECTRICAL, UNKNOWN VOLTAGE	TR	"C" 161+50
63c	U-11, U-13	PG&E	OH ELECTRICAL, 12kv	-	-
64	U-11, U-12, U-13	CITY OF MOUNTAIN VIEW	14" ACP WATER	TR	"C" 161+00
64a	U-12, U-13	AT&T	TELEPHONE	TR	"C" 165+00
65	U-12	PG&E	10" VCP GAS	PA	LANDINGS Dr
66	U-12	PG&E	1¼" PLASTIC GAS	PA	LANDINGS Dr
67	U-12	CITY OF MOUNTAIN VIEW	12" ACP WATER	-	LANDINGS Dr
68	U-12, U-14	Private	8" PVC WATER	PA	Landmark Pkwy TO "C" 179+50, EAST OF NB 101
69	U-12, U-14	Private	4" PVC WATER	-	LANDINGS Dr TO "C" 177+50, EAST OF NB 101
70	U-12, U-14	Private	8" PVC WATER	-	LANDINGS Dr TO "C" 177+50, EAST OF NB 101
71	U-12, U-14	PG&E	4" PLASTIC GAS	-	LANDINGS Dr TO "C" 181+80, EAST OF NB 101
72	U-11, U-13	CITY OF MOUNTAIN VIEW	8" ACP WATER	-	CHARLESTON Rd TO "C" 161+70, WEST OF SB 101
73	U-11, U-13	CITY OF MOUNTAIN VIEW	8" VCP SS	-	CHARLESTON Rd TO NORTH RENGSTORFF Ave, WEST OF SB 101
74	U-11, U-13	PG&E	4" PLASTIC GAS	-	CHARLESTON Rd TO NORTH RENGSTORFF Ave, WEST OF SB 101
75	U-13	COMCAST	OH CATV	PA	CHARLESTON Rd TO NORTH RENGSTORFF Ave, WEST OF SB 101
76	U-13	CITY OF MOUNTAIN VIEW	14" ACP WATER	-	RENGSTORFF Ave
77	U-13, U-14	COMCAST	OH CATV	-	LEGHORN St TO SIERRA VISTA Ave
78	U-13, U-14	CITY OF MOUNTAIN VIEW	8" ACP WATER	-	LEGHORN St TO SIERRA VISTA Ave

UTILITY PLAN

U-19

STATE OF CALIFORNIA - DEPARTMENT OF TRANSPORTATION
Caltrans

CONSULTANT FUNCTIONAL SUPERVISOR: CHRISTOPHER LILLIE
CALCULATED-DESIGNED BY: SARAH CHRISTENSEN
CHECKED BY: LAN HO
REVISED BY: S C
DATE REVISED: 01/24/11

LAST REVISION 01-24-11 | DATE PLOTTED => 15-JUL-2011 | TIME PLOTTED => 13:16

Dist	COUNTY	ROUTE	POST MILES TOTAL PROJECT	SHEET No.	TOTAL SHEETS
04	SCI	101	48.7/52.0	363	993

REGISTERED CIVIL ENGINEER 01/31/11 DATE

7-11-11
PLANS APPROVAL DATE

REGISTERED PROFESSIONAL ENGINEER Christopher Lillie No. C61288 Exp. 06/30/11 CIVIL STATE OF CALIFORNIA

THE STATE OF CALIFORNIA OR ITS OFFICERS OR AGENTS SHALL NOT BE RESPONSIBLE FOR THE ACCURACY OR COMPLETENESS OF SCANNED COPIES OF THIS PLAN SHEET.

URS Corporation
100 W San Fernando St
Suite 200
San Jose, CA 95113

Santa Clara Valley
Transportation Authority
3331 N First Street
San Jose, CA 95134

UTILITY INFORMATION

UTILITY No.	SHEET No.	OWNER	UTILITY DESCRIPTION	DIRECTION	LOCATION
79	U-13, U-14	CITY OF MOUNTAIN VIEW	8" VCP SS	-	LEGHORN St
80	U-13, U-14	PG&E	3" PLASTIC GAS	-	LEGHORN St TO "C" 176+20, WEST OF SB 101
81	U-14	PG&E	4" PLASTIC GAS in 6" STEEL CASING	TR	"C" 176+20
81a	U-14	PG&E	OH ELECTRICAL, 12kV	TR	"C" 174+90
81b	U-14	AT&T	U/G TELEPHONE	TR	"C" 174+90
82	U-14	PG&E	1" PLASTIC GAS	PA	"C" 176+20 TO 177+70, WEST OF SB 101
83	U-14	COMCAST	OH CATV	-	PLYMOUTH St
83a	U-14, U-15	PG&E	OH ELECTRICAL, 12kV	TR	"C" 184+80
84	U-14	PG&E	3" STEEL GAS	-	PLYMOUTH St
85	U-14	PG&E	3" GAS in 6" STEEL CASING	TR	"C" 184+80
86	U-14	CITY OF MOUNTAIN VIEW	SEWER (UNKNOWN SIZE)	-	PLYMOUTH St
87	U-14	CITY OF MOUNTAIN VIEW	8" ACP WATER	-	PLYMOUTH St
88	U-14, U-15	PG&E	4" GAS	PA	"C" 185+00 TO 188+00, EAST OF NB 101
89	U-15	CITY OF MOUNTAIN VIEW	8" SEWER	-	"C" 190+00 TO 191+80 DIAGONAL, EAST OF NB 101
90	U-15	CITY OF MOUNTAIN VIEW	14" DIP WATER	-	"C" 190+00 TO 191+80 DIAGONAL, EAST OF NB 101
91	U-15	PG&E	2" PLASTIC GAS	-	"C" 192+30 TO 193+60, EAST OF NB 101
92	U-15	CITY OF MOUNTAIN VIEW	8" ACP WATER	PA	"C" 192+30 TO 196+10
92a	U-15	PRIVATE	480V PRIVATE ELECTRIC (SERVICE)	PA	"C" 193+50 TO 196+10
93	U-15	CITY OF MOUNTAIN VIEW	14" DIP WATER in 30" CASING	TR	"C" 191+20
94	U-15	CITY OF MOUNTAIN VIEW	14" DIP WATER	-	"C" 190+40, CONNECTING TO 93, EAST OF NB 101
95	U-16, U-17	COMCAST	OH CATV	PA	OLD MIDDLEFIELD Wy TO "C" 212+40 WEST OF SB LANE
95a	U-16, U-17	PG&E	OH ELECTRICAL, 12kV	PA	OLD MIDDLEFIELD Wy TO SHORELINE Blvd, WEST OF SB LANE
96	U-16, U-17	CITY OF MOUNTAIN VIEW	6" CIP WATER	-	SPRING St
97	U-16, U-17	CITY OF MOUNTAIN VIEW	12" VCP SS	-	SPRING St
98	U-16, U-17	PG&E	2" STEEL GAS	-	SPRING St
99	U-16	CITY OF MOUNTAIN VIEW	12" VCP SS LINED WITH INSITUFORM	TR	"C" 208+30
100	U-17	PG&E	4" STEEL GAS IN 8" STEEL CASING	TR	"C" 213+60
101	U-17	CITY OF MOUNTAIN VIEW	12" ACP WATER	TR	"C" 219+60
102	U-17	CITY OF MOUNTAIN VIEW	18" CSP/RCP SS	TR	"C" 219+60

UTILITY PLAN

U-20

REVISED BY: S C — DATE REVISED: 01/24/11
SARAH CHRISTENSEN — LAN HO
CALCULATED-DESIGNED BY — CHECKED BY
CONSULTANT FUNCTIONAL SUPERVISOR: CHRISTOPHER LILLIE
STATE OF CALIFORNIA - DEPARTMENT OF TRANSPORTATION
Caltrans

LAST REVISION 01/24/11 — DATE PLOTTED => 15-JUL-2011 — TIME PLOTTED => 13:16

Dist	COUNTY	ROUTE	POST MILES TOTAL PROJECT	SHEET No.	TOTAL SHEETS
04	SCI	101	48.7/52.0	364	993

REGISTERED CIVIL ENGINEER 05/13/11 DATE

7-11-11
PLANS APPROVAL DATE

REGISTERED PROFESSIONAL ENGINEER Christopher Lillie No. C61288 Exp. 06/30/11 CIVIL STATE OF CALIFORNIA

THE STATE OF CALIFORNIA OR ITS OFFICERS OR AGENTS SHALL NOT BE RESPONSIBLE FOR THE ACCURACY OR COMPLETENESS OF SCANNED COPIES OF THIS PLAN SHEET.

URS Corporation
100 W San Fernando St
Suite 200
San Jose, CA 95113

Santa Clara Valley
Transportation Authority
3331 N First Street
San Jose, CA 95134

NOTE:

FOR ACCURATE RIGHT OF WAY DATA, CONTACT
RIGHT OF WAY ENGINEERING AT THE DISTRICT OFFICE.

NOTE:

1. SEE SHEET U-1 FOR POTHOLE INFORMATION
2. SEE LAYOUT & TYPICAL SECTIONS FOR PAVEMENT INFORMATION

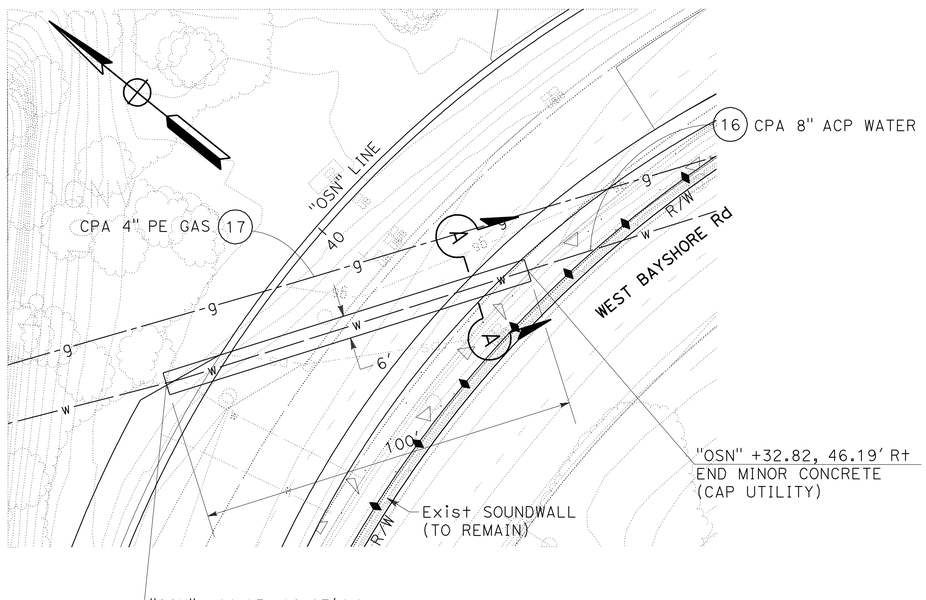

PLAN
SCALE: 1" = 20'

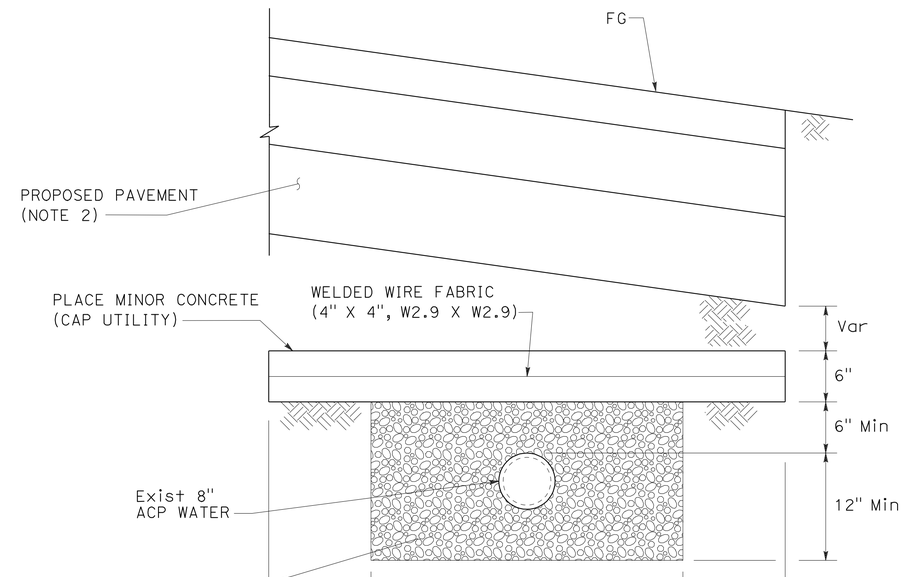

SECTION A-A
CONCRETE CAP ON Exist 8" ACP WATER
NO SCALE

WATER PIPE PROTECTION DETAIL
WATER CROSSING AT THE OREGON EXPRESSWAY SOUTHBOUND ON-RAMP

FOR NOTES, ABBREVIATIONS AND LEGEND SEE SHEET U-1

UTILITY DETAILS
SCALE AS SHOWN
UD-1

STATE OF CALIFORNIA - DEPARTMENT OF TRANSPORTATION
Caltrans
CONSULTANT FUNCTIONAL SUPERVISOR: CHRISTOPHER LILLIE
CALCULATED-DESIGNED BY: SARAH CHRISTENSEN
CHECKED BY: LAN HO
REVISED BY: S C
DATE REVISED: 05/12/11

LAST REVISION 05-12-11
DATE PLOTTED => 15-JUL-2011
TIME PLOTTED => 12:29

Dist	COUNTY	ROUTE	POST MILES TOTAL PROJECT	SHEET No.	TOTAL SHEETS
04	SCI	101	48.7/52.0	365	993

REGISTERED CIVIL ENGINEER 05/13/11 DATE

7-11-11
PLANS APPROVAL DATE

REGISTERED PROFESSIONAL ENGINEER Christopher Lillie No. C61288 Exp. 06/30/11 CIVIL STATE OF CALIFORNIA

THE STATE OF CALIFORNIA OR ITS OFFICERS OR AGENTS SHALL NOT BE RESPONSIBLE FOR THE ACCURACY OR COMPLETENESS OF SCANNED COPIES OF THIS PLAN SHEET.

URS Corporation
100 W San Fernando St
Suite 200
San Jose, CA 95113

Santa Clara Valley
Transportation Authority
3331 N First Street
San Jose, CA 95134

NOTE:

FOR ACCURATE RIGHT OF WAY DATA, CONTACT RIGHT OF WAY ENGINEERING AT THE DISTRICT OFFICE.

NOTE:

1. SEE SHEET U-2 FOR POTHOLE INFORMATION
2. SEE LAYOUTS & TYPICAL SECTIONS FOR PAVEMENT INFORMATION

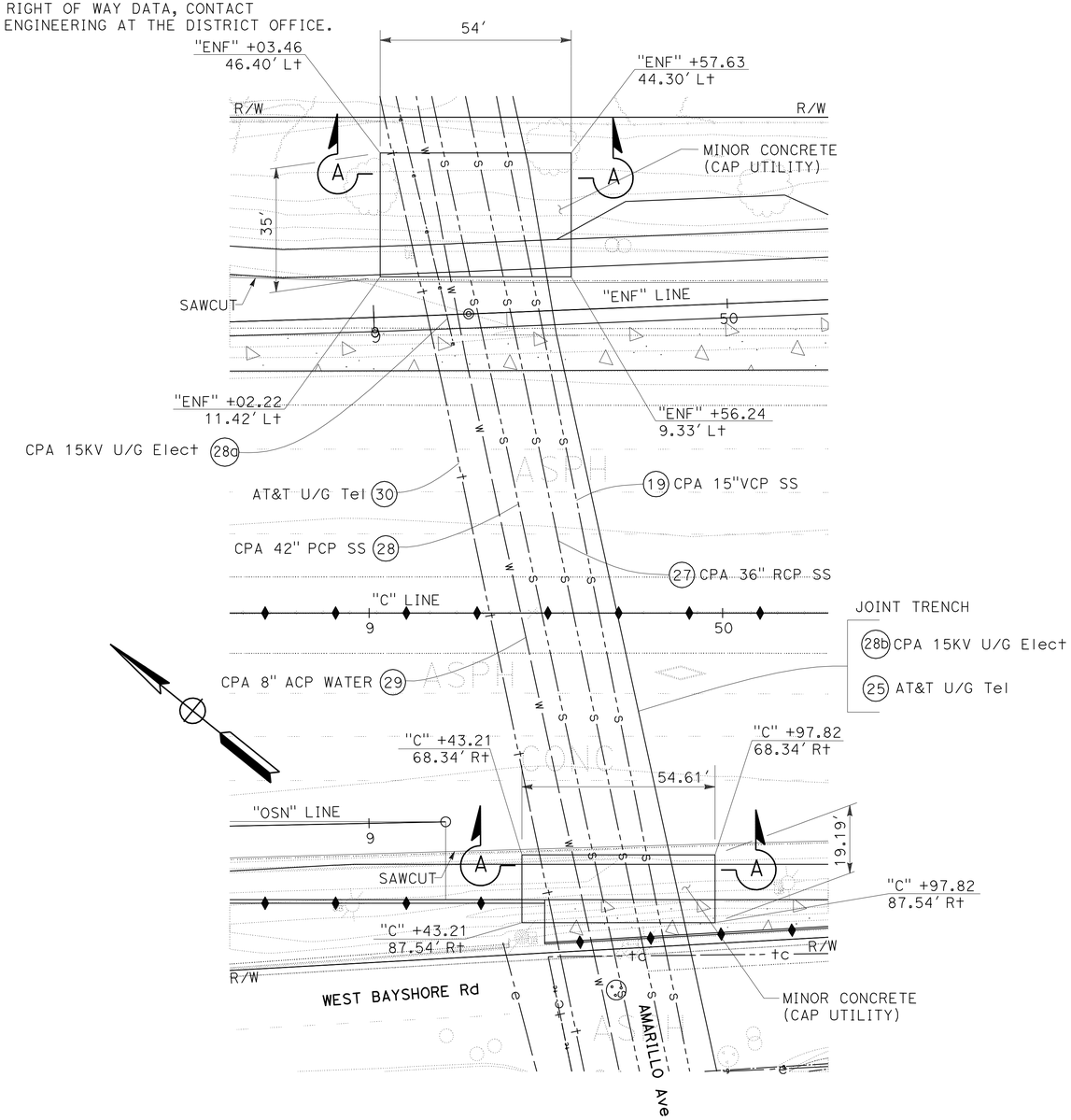

PLAN
SCALE: 1" = 20'

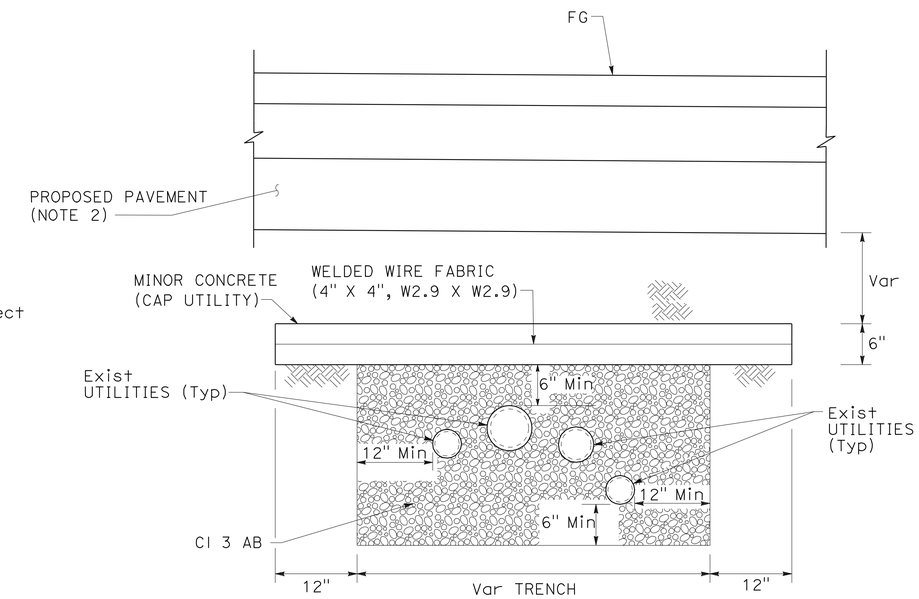

SECTION A-A
Typ
CONCRETE CAP ON Exist UTILITY CROSSINGS AT AMARILLO Ave
NO SCALE

FOR NOTES, ABBREVIATIONS AND LEGEND SEE SHEET U-1

UTILITY PROTECTION DETAIL
UTILITY CROSSINGS AT AMARILLO Ave

UTILITY DETAILS
SCALE AS SHOWN
UD-2

STATE OF CALIFORNIA - DEPARTMENT OF TRANSPORTATION
Caltrans

CONSULTANT FUNCTIONAL SUPERVISOR: CHRISTOPHER LILLIE
CALCULATED-DESIGNED BY: SARAH CHRISTENSEN
CHECKED BY: LAN HO
REVISED BY: S C
DATE REVISED: 05/12/11

LAST REVISION 05-12-11
DATE PLOTTED => 15-JUL-2011
TIME PLOTTED => 12:29

Dist	COUNTY	ROUTE	POST MILES TOTAL PROJECT	SHEET No.	TOTAL SHEETS
04	SCI	101	48.7/52.0	366	993

REGISTERED CIVIL ENGINEER 05/13/11 DATE

7-11-11
PLANS APPROVAL DATE

REGISTERED PROFESSIONAL ENGINEER M. Laderman No. C22563 Exp. 12/31/11 CIVIL STATE OF CALIFORNIA

THE STATE OF CALIFORNIA OR ITS OFFICERS OR AGENTS SHALL NOT BE RESPONSIBLE FOR THE ACCURACY OR COMPLETENESS OF SCANNED COPIES OF THIS PLAN SHEET.

CSG CONSULTANTS, Inc.
1700 S Amphlet Blvd,
3rd Floor
San Mateo, CA 94402

Santa Clara Valley
Transportation Authority
3331 N First Street
San Jose, CA 95134

NOTE:

FOR ACCURATE RIGHT OF WAY DATA, CONTACT
RIGHT OF WAY ENGINEERING AT THE DISTRICT OFFICE.

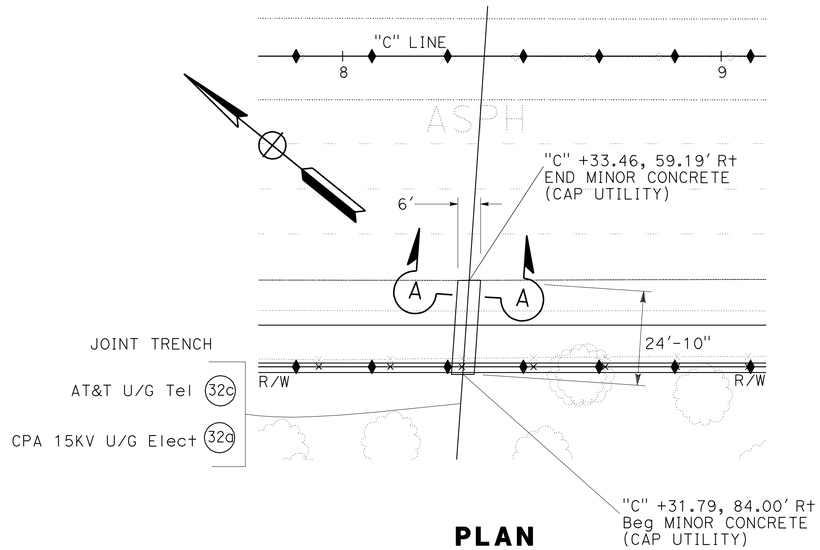

PLAN
SCALE: 1" = 20'

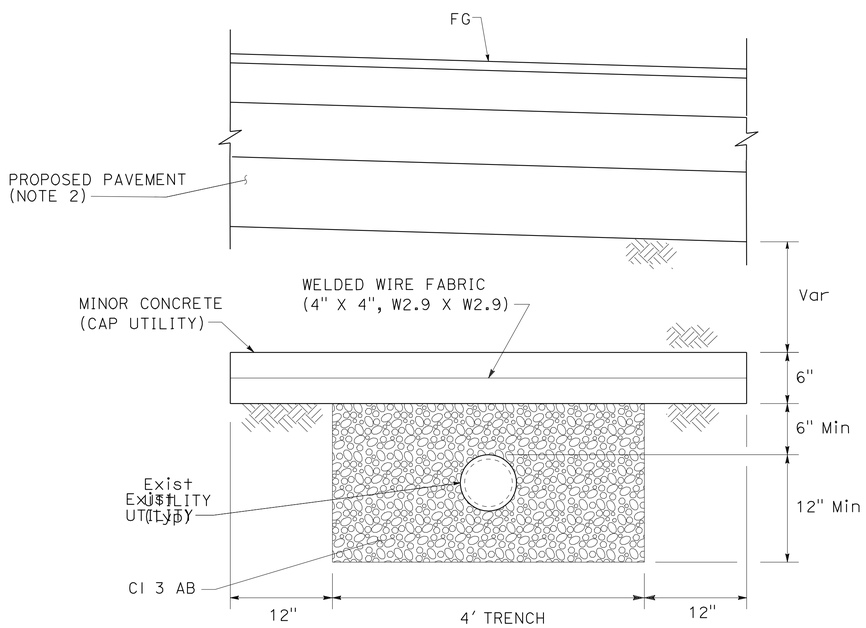

SECTION A-A
CONCRETE CAP ON Exist UTILITIES (Typ)
NO SCALE

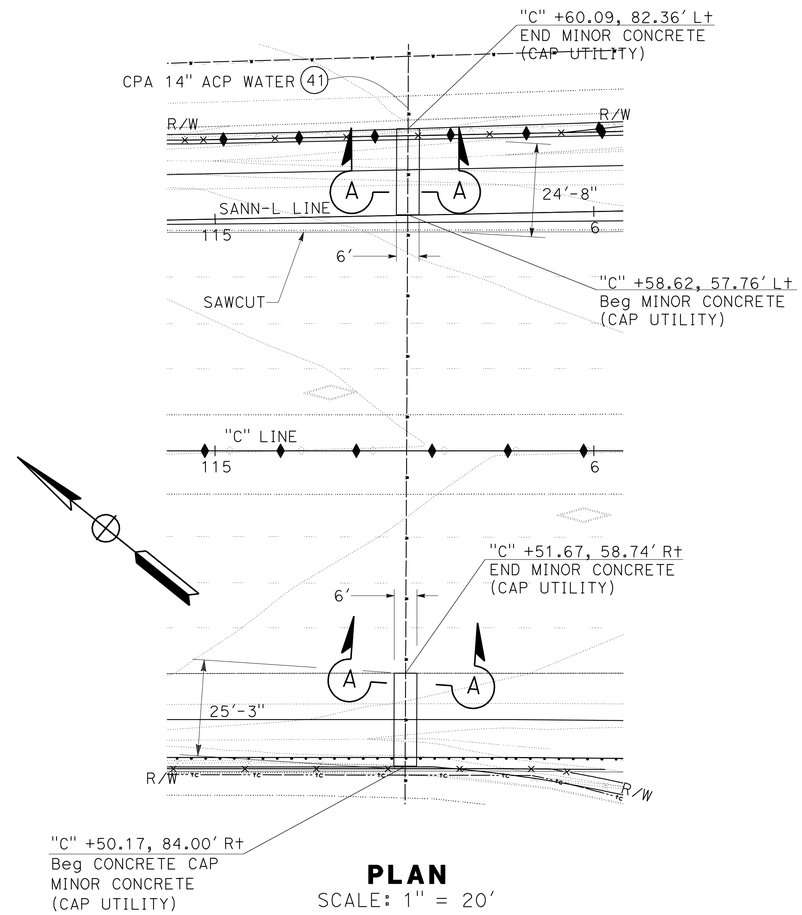

PLAN
SCALE: 1" = 20'

NOTE:

1. SEE UTILITY PLANS FOR POTHOLE INFORMATION
2. SEE LAYOUTS & TYPICAL SECTION FOR PAVEMENT INFORMATION

FOR NOTES, ABBREVIATIONS AND LEGEND SEE SHEET U-1

UTILITY PROTECTION DETAIL
(Typ)

UTILITY DETAILS
SCALE AS SHOWN

UD-3

STATE OF CALIFORNIA - DEPARTMENT OF TRANSPORTATION
Caltrans

CONSULTANT FUNCTIONAL SUPERVISOR: MICHAEL LADERMAN
CALCULATED-DESIGNED BY: KAVEH FOROUHI
CHECKED BY: MICHAEL LADERMAN
REVISED BY
DATE REVISED

LAST REVISION 05-12-11
DATE PLOTTED => 15-JUL-2011
TIME PLOTTED => 12:30

Dist	COUNTY	ROUTE	POST MILES TOTAL PROJECT	SHEET No.	TOTAL SHEETS
04	SCI	101	48.7/52.0	367	993

REGISTERED CIVIL ENGINEER 01/31/11 DATE

7-11-11
PLANS APPROVAL DATE

REGISTERED PROFESSIONAL ENGINEER M. Laderman No. C22563 Exp. 12/31/11 CIVIL STATE OF CALIFORNIA

THE STATE OF CALIFORNIA OR ITS OFFICERS OR AGENTS SHALL NOT BE RESPONSIBLE FOR THE ACCURACY OR COMPLETENESS OF SCANNED COPIES OF THIS PLAN SHEET.

CSG CONSULTANTS, Inc.
1700 S Amphlet Blvd,
3rd Floor
San Mateo, CA 94402

Santa Clara Valley
Transportation Authority
3331 N First Street
San Jose, CA 95134

NOTE:

FOR ACCURATE RIGHT OF WAY DATA, CONTACT
RIGHT OF WAY ENGINEERING AT THE DISTRICT OFFICE.

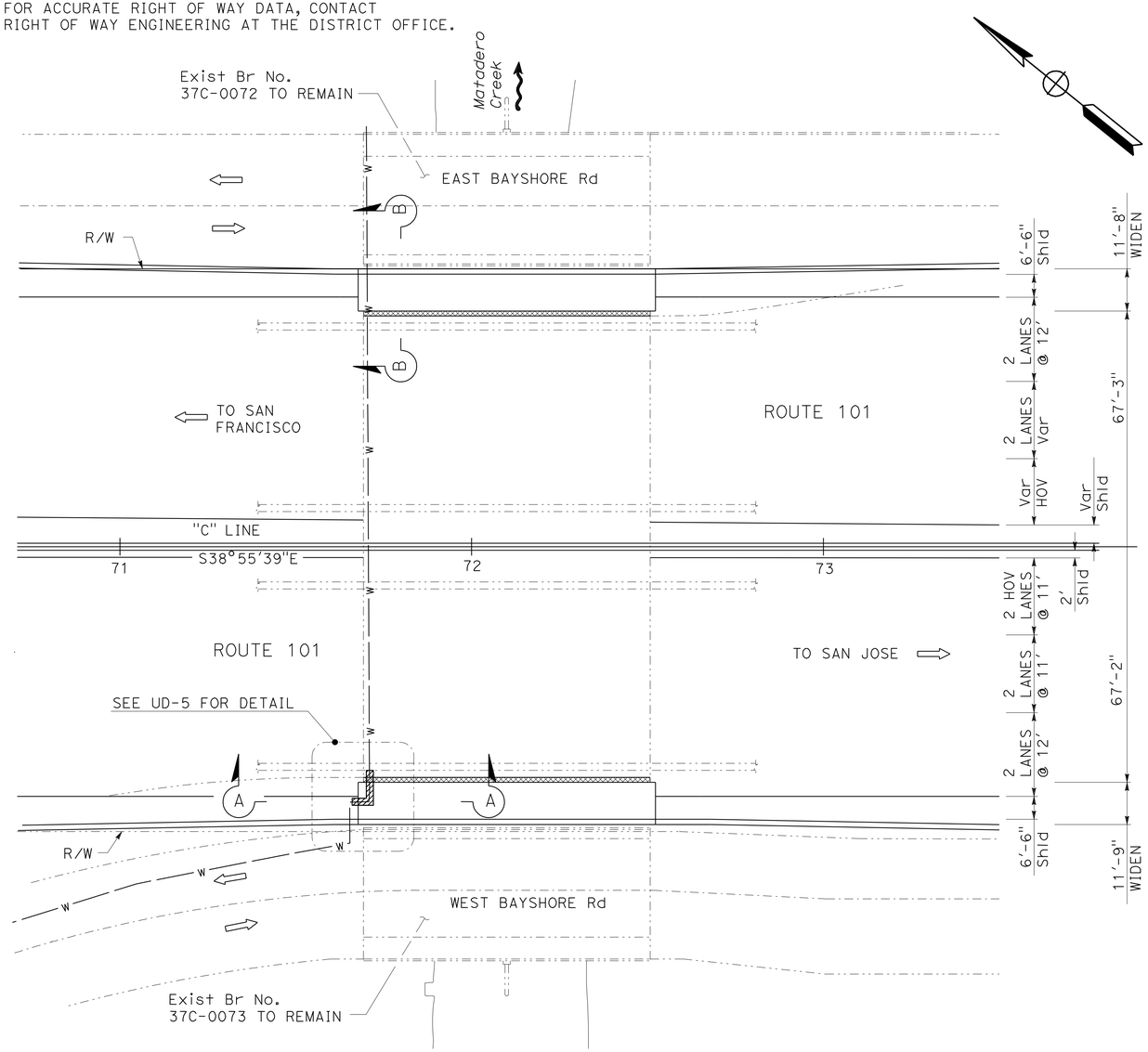

MATADERO CREEK SITE PLAN

SCALE: 1" = 20'

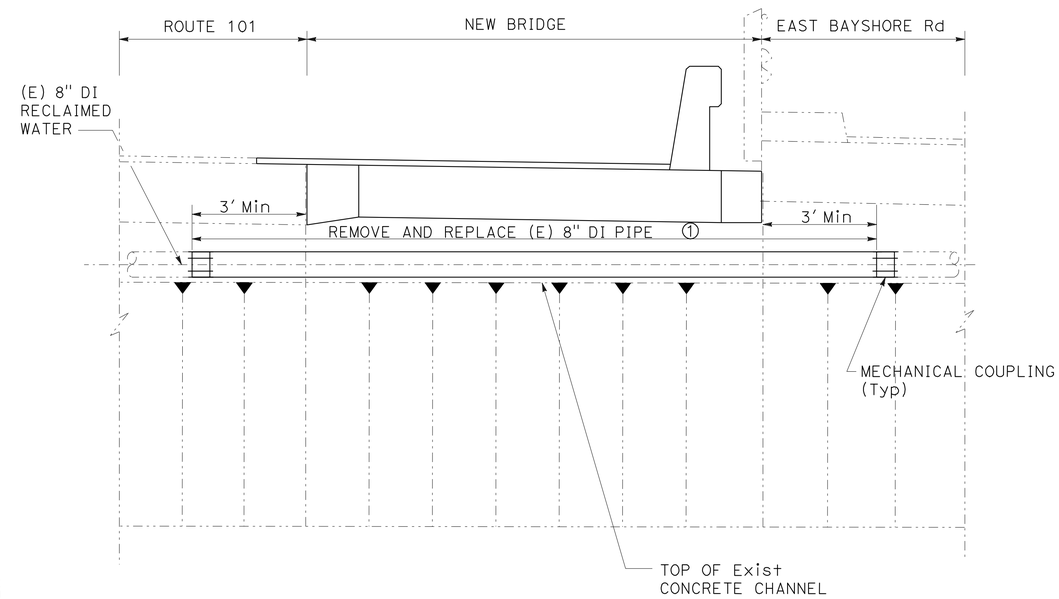

SECTION B-B

SCALE: 1/2" = 1'

LEGEND:

- EXISITING STRUCTURE
- BRIDGE REMOVAL (PORTION
- DIRECTION OF TRAFFIC
- DIRECTION OF FLOW
- TOP / BOTTOM — SLOPE
- FACILITIES TO BE DEMOLISHED
- w — RECLAIMED WATER - EXISTING

THIS PLAN ACCURATE FOR UTILITY INFORMATION ONLY

NOTE:

1. MAINTAIN A TEMPORARY 8" Dia BYPASS BETWEEN 8 PM TO 6AM
2. SEE UD-5 FOR SECTION A-A

ABBREVIATIONS:

DI = DUCTILE IRON

UTILITY DETAILS MATADERO CREEK SITE PLAN AND ELEVATION

SCALE AS SHOWN

UD-4

STATE OF CALIFORNIA - DEPARTMENT OF TRANSPORTATION
Caltrans

CONSULTANT FUNCTIONAL SUPERVISOR: MICHAEL LADERMAN
CALCULATED-DESIGNED BY: KAVEH FOROUHI
CHECKED BY: MICHAEL LADERMAN
REVISED BY
DATE REVISED

LAST REVISION 01/24/11
DATE PLOTTED => 15-JUL-2011
TIME PLOTTED => 12:30

Dist	COUNTY	ROUTE	POST MILES TOTAL PROJECT	SHEET No.	TOTAL SHEETS
04	SCI	101	48.7/52.0	368	993

REGISTERED CIVIL ENGINEER 01/31/11 DATE

7-11-11
PLANS APPROVAL DATE

REGISTERED PROFESSIONAL ENGINEER M. Laderman No. C22563 Exp. 12/31/11 CIVIL STATE OF CALIFORNIA

THE STATE OF CALIFORNIA OR ITS OFFICERS OR AGENTS SHALL NOT BE RESPONSIBLE FOR THE ACCURACY OR COMPLETENESS OF SCANNED COPIES OF THIS PLAN SHEET.

CSG CONSULTANTS, Inc.
1700 S Amphlet Blvd,
3rd Floor
San Mateo, CA 94402

Santa Clara Valley
Transportation Authority
3331 N First Street
San Jose, CA 95134

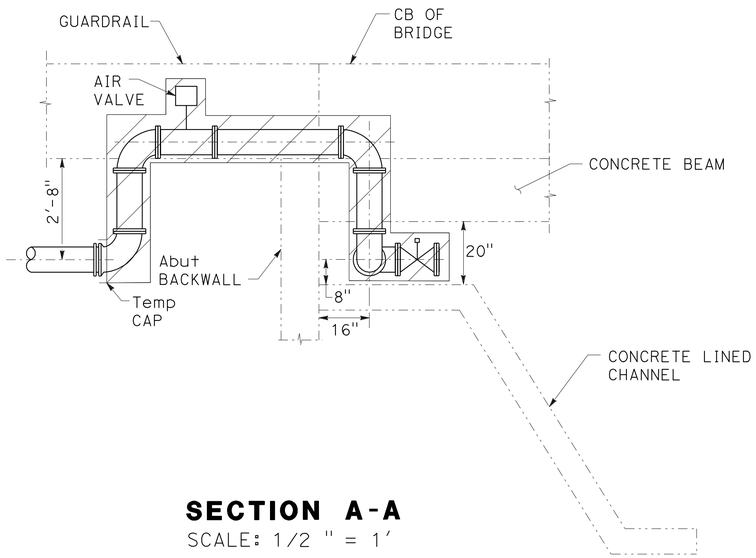

SECTION A-A
SCALE: 1/2 " = 1'

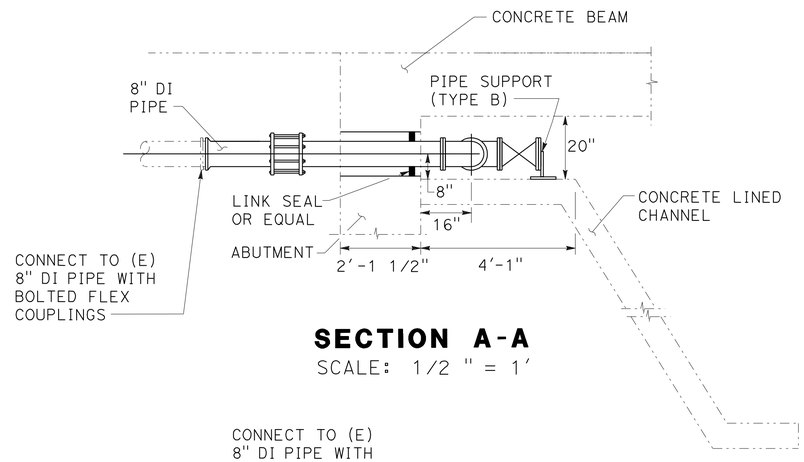

SECTION A-A
SCALE: 1/2 " = 1'

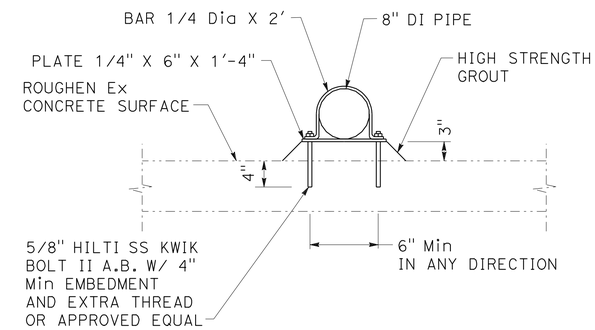

TYPE A PIPE SUPPORT
SCALE: 1" = 1'

NOTES:

1. WRAP BURIED PIPE WITH POLYETHYLENE ENCASEMENT
2. FOR LEGEND AND ABBREVIATIONS, SEE SHEET UD-4

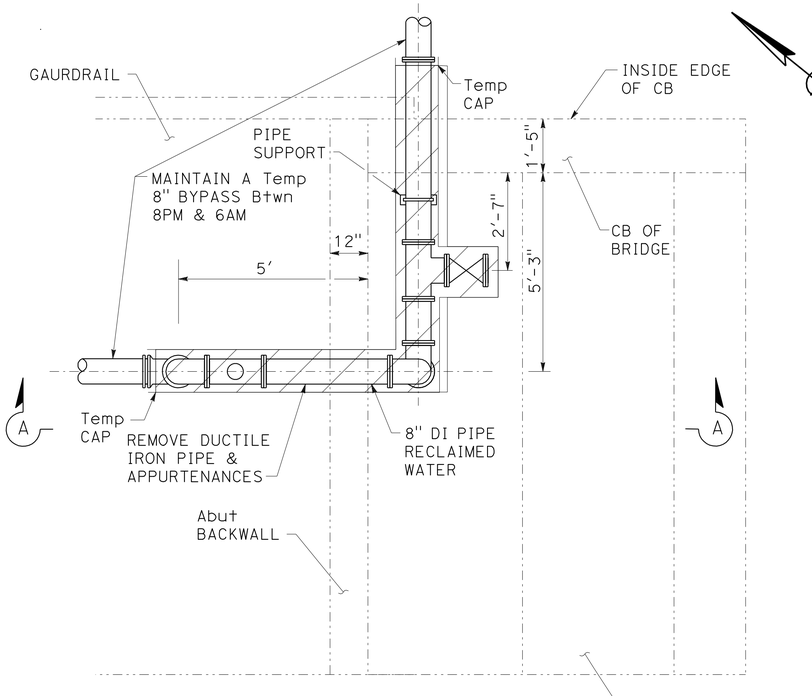

DEMOLITION PLAN
SCALE: 1/2" = 1'

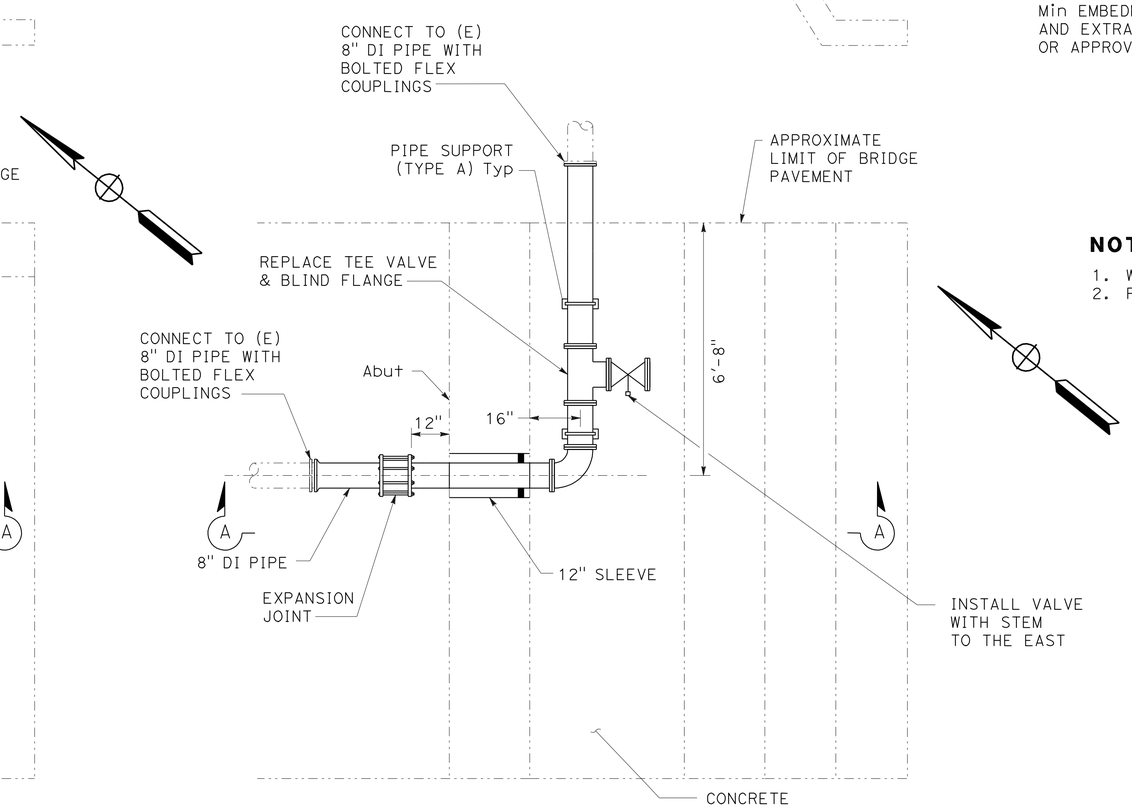

IMPROVEMENT PLAN
SCALE: 1/2" = 1'

UTILITY DETAILS MATADERO CREEK WEST SIDE

SCALE AS SHOWN

UD-5

STATE OF CALIFORNIA - DEPARTMENT OF TRANSPORTATION
Caltrans

CONSULTANT FUNCTIONAL SUPERVISOR: MICHAEL LADERMAN
CALCULATED-DESIGNED BY: KAVEH FOROUHI
CHECKED BY: MICHAEL LADERMAN
REVISED BY
DATE REVISED

LAST REVISION 01/24/11
DATE PLOTTED => 15-JUL-2011
TIME PLOTTED => 12:30

Dist	COUNTY	ROUTE	POST MILES TOTAL PROJECT	SHEET No.	TOTAL SHEETS
04	SCI	101	48.7/52.0	369	993

REGISTERED CIVIL ENGINEER 01/31/11 DATE

7-11-11
PLANS APPROVAL DATE

REGISTERED PROFESSIONAL ENGINEER M. Laderman No. C22563 Exp. 12/31/11 CIVIL STATE OF CALIFORNIA

THE STATE OF CALIFORNIA OR ITS OFFICERS OR AGENTS SHALL NOT BE RESPONSIBLE FOR THE ACCURACY OR COMPLETENESS OF SCANNED COPIES OF THIS PLAN SHEET.

CSG CONSULTANTS, Inc.
1700 S Amphlet Blvd,
3rd Floor
San Mateo, CA 94402

Santa Clara Valley
Transportation Authority
3331 N First Street
San Jose, CA 95134

FOR ACCURATE RIGHT OF WAY DATA, CONTACT
RIGHT OF WAY ENGINEERING AT THE DISTRICT OFFICE.

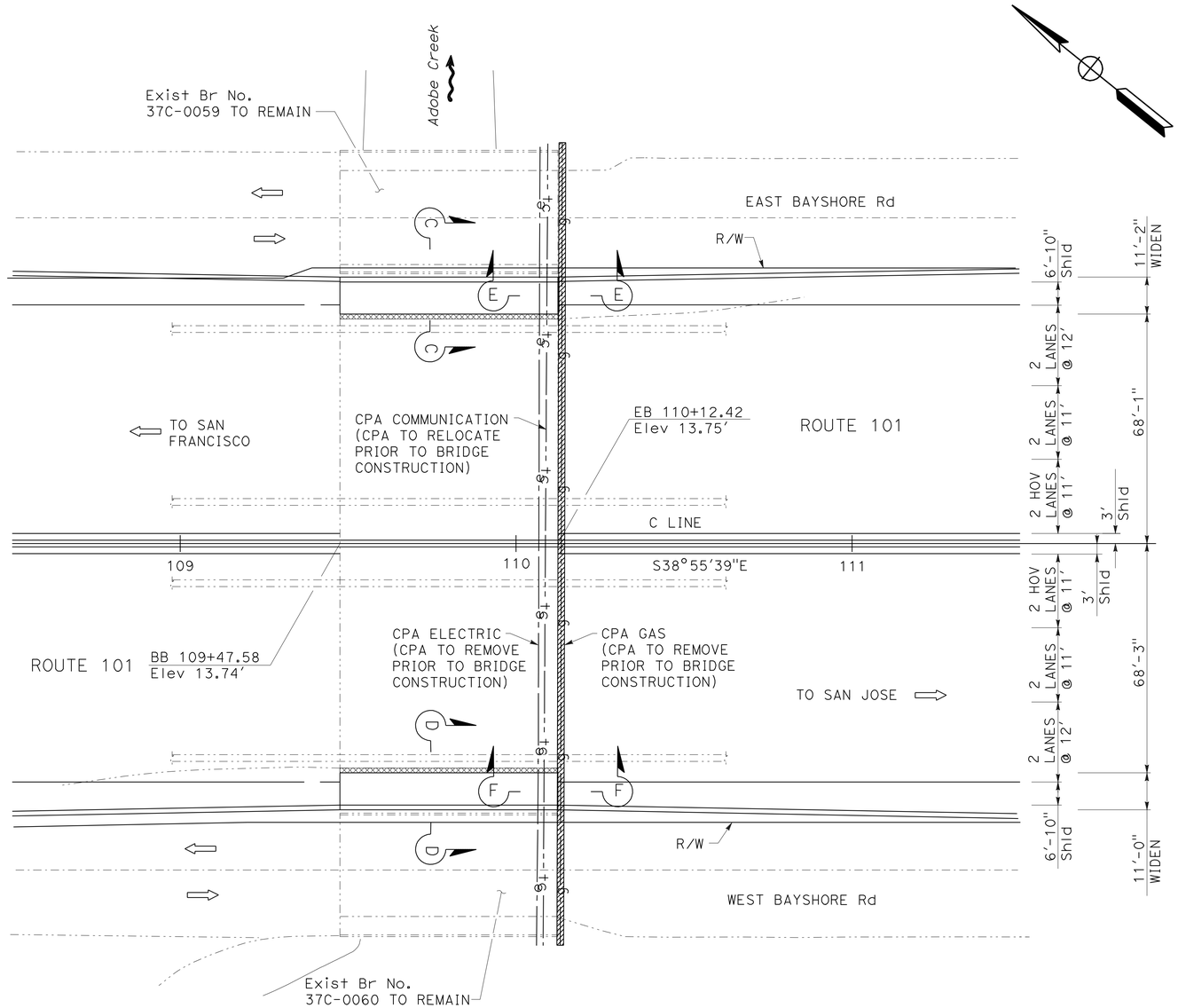

LEGEND:

- EXISTING STRUCTURE
- BRIDGE REMOVAL (PORTION)
- DIRECTION OF TRAFFIC
- DIRECTION OF FLOW
- SLOPE (TOP / BOTTOM)
- FACILITIES TO BE DEMOLISHED (BY CPA)
- —g— NATURAL GAS LINE - EXISTING
- —e— ELECTRICAL CONDUIT - EXISTING
- --tc-- COMMUNICATION CONDUIT - EXISTING

NOTE:

1. SEE UD-7 FOR SECTION C-C, SECTION D-D, SECTION E-E AND SECTION F-F
2. THE REMOVAL OF THE GAS LINE SHALL OCCUR FOLLOWING THE REMOVAL OF THE ELECTRIC AND RELOCATION OF THE COMMUNICATION.

ABBREVEATIONS:

DI = DUCTILE IRON
(N) = NEW

ADOBE CREEK SITE PLAN

FOR INFORMATION ONLY

UTILITY DETAILS ADOBE CREEK SITE PLAN

SCALE: 1" = 20'

UD-6

STATE OF CALIFORNIA - DEPARTMENT OF TRANSPORTATION

Caltrans

CONSULTANT FUNCTIONAL SUPERVISOR: MICHAEL LADERMAN

CALCULATED-DESIGNED BY: KAVEH FOROUHI

CHECKED BY: MICHAEL LADERMAN

REVISED BY

DATE REVISED

LAST REVISION 01/24/11

DATE PLOTTED => 15-JUL-2011
TIME PLOTTED => 12:30

Dist	COUNTY	ROUTE	POST MILES TOTAL PROJECT	SHEET No.	TOTAL SHEETS
04	SCI	101	48.7/52.0	370	993

REGISTERED CIVIL ENGINEER 01/31/11 DATE

7-11-11
PLANS APPROVAL DATE

REGISTERED PROFESSIONAL ENGINEER M. Laderman No. C22563 Exp. 12/31/11 CIVIL STATE OF CALIFORNIA

THE STATE OF CALIFORNIA OR ITS OFFICERS OR AGENTS SHALL NOT BE RESPONSIBLE FOR THE ACCURACY OR COMPLETENESS OF SCANNED COPIES OF THIS PLAN SHEET.

CSG CONSULTANTS, Inc.
1700 S Amphlet Blvd,
3rd Floor
San Mateo, CA 94402

Santa Clara Valley
Transportation Authority
3331 N First Street
San Jose, CA 95134

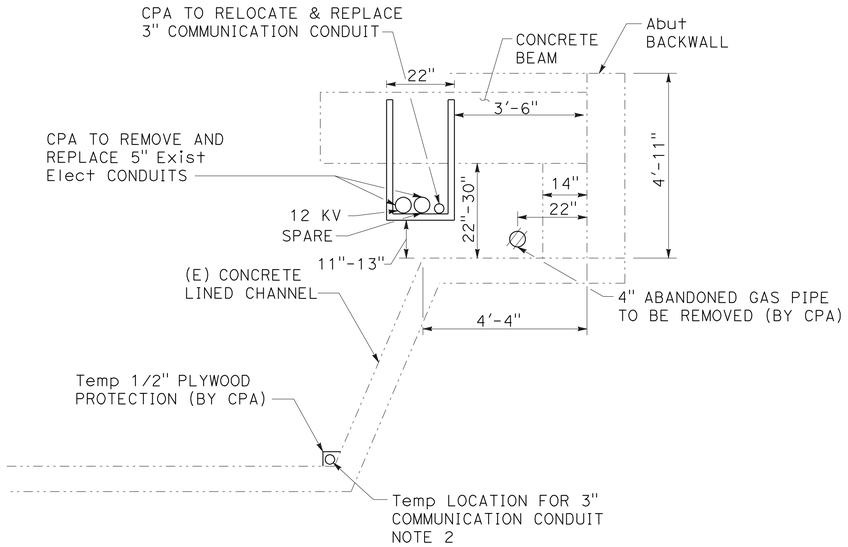

SECTION E-E

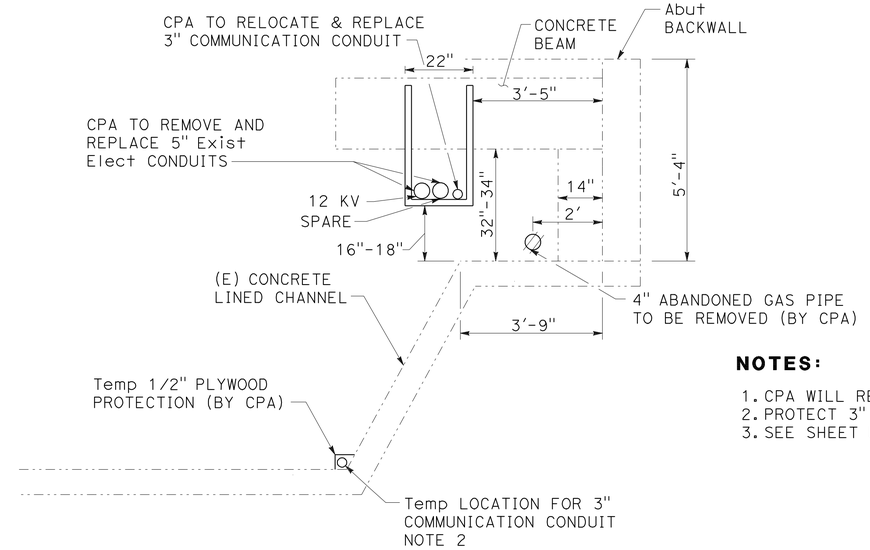

SECTION F-F

NOTES:

1. CPA WILL REMOVE AND REPLACE Elect CABLE & CONDUITS
2. PROTECT 3" CONDUIT IN PLACE DURING BRIDGE CONSTRUCTION
3. SEE SHEET UD-6 FOR LEGEND AND ABBREVIATIONS

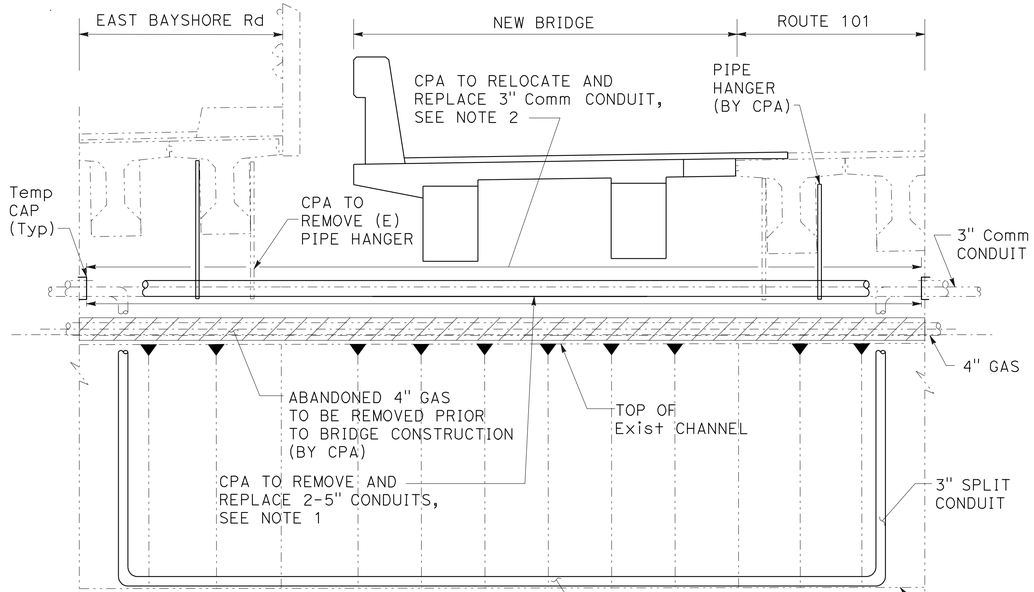

SECTION C-C

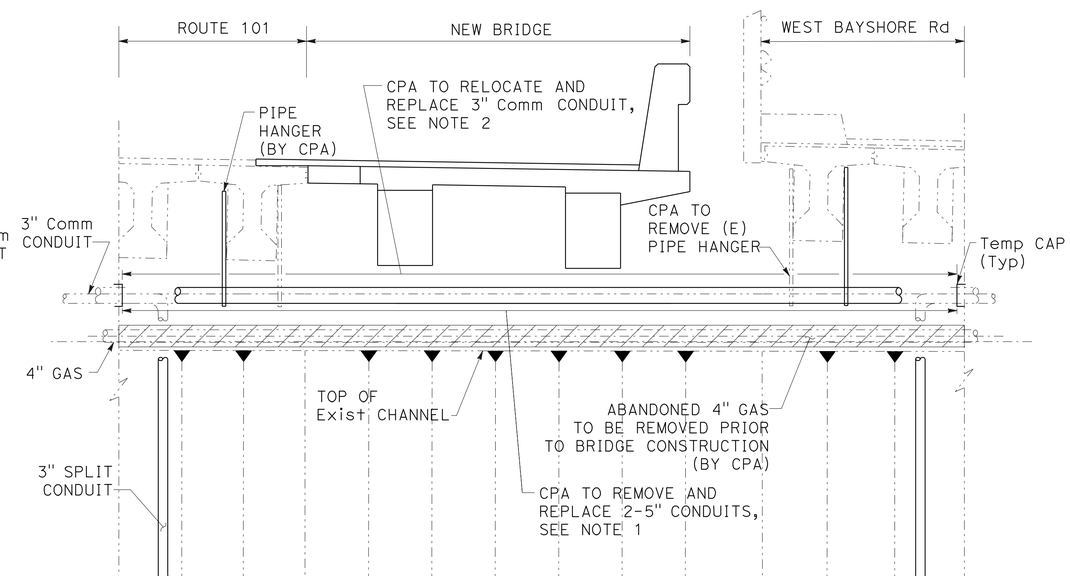

SECTION D-D

UTILITY DETAILS ADOBE CREEK CROSS SECTIONS & ELEVATIONS

SCALE: 1/2" = 1'

FOR INFORMATION ONLY

UD-7

STATE OF CALIFORNIA - DEPARTMENT OF TRANSPORTATION
Caltrans

CONSULTANT FUNCTIONAL SUPERVISOR: MICHAEL LADERMAN
CALCULATED-DESIGNED BY: KAVEH FOROUHI
CHECKED BY: MICHAEL LADERMAN
REVISED BY
DATE REVISED

LAST REVISION 01/24/11
DATE PLOTTED => 15-JUL-2011
TIME PLOTTED => 12:30

Dist	COUNTY	ROUTE	POST MILES TOTAL PROJECT	SHEET No.	TOTAL SHEETS
04	SCI	101	48.7/52.0	371	993

REGISTERED CIVIL ENGINEER 05/13/11 DATE

7-11-11
PLANS APPROVAL DATE

REGISTERED PROFESSIONAL ENGINEER M. Laderman No. C22563 Exp. 12/31/11 CIVIL STATE OF CALIFORNIA

THE STATE OF CALIFORNIA OR ITS OFFICERS OR AGENTS SHALL NOT BE RESPONSIBLE FOR THE ACCURACY OR COMPLETENESS OF SCANNED COPIES OF THIS PLAN SHEET.

CSG CONSULTANTS, Inc.
1700 S Amphlet Blvd,
3rd Floor
San Mateo, CA 94402

Santa Clara Valley
Transportation Authority
3331 N First Street
San Jose, CA 95134

NOTES:

1. USE CHRISTY B1017 OR EQUAL H20 BOX & LID WITH STEEL CHECKER PLATE LID MARKED "RECLAIMED WATER" PAINT LID PURPLE
2. USE CHRISTY B1324 OR EQUAL H20 BOX & LID WITH STEEL CHECKER PLATE LID MARKED "RECLAIMED WATER" PAINT LID PURPLE
3. ALL DIMENSIONS ARE APPROXIMATE

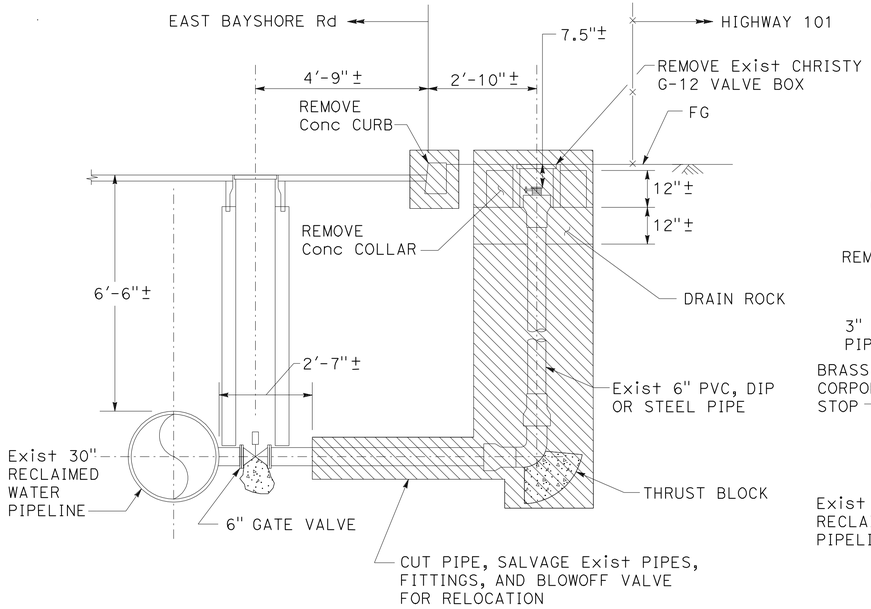

TYPICAL BLOWOFF VALVE REMOVAL

SCALE: 1/2" = 1'

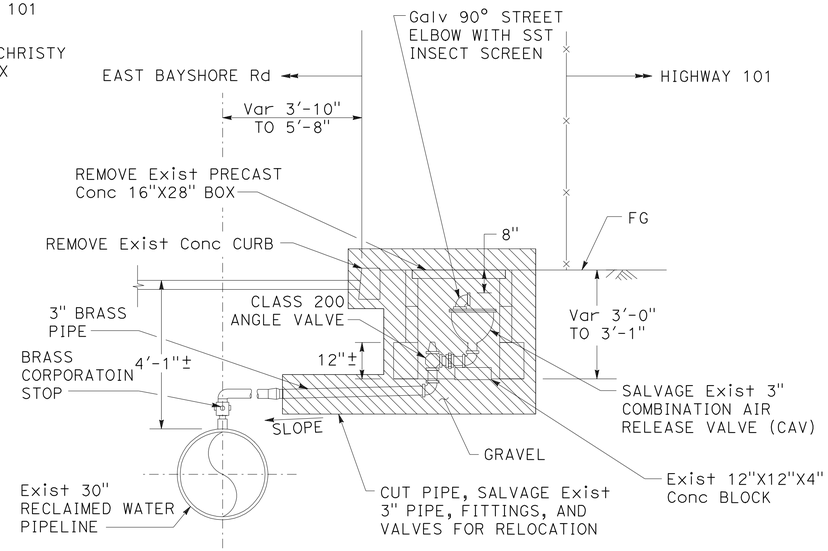

TYPICAL CAV REMOVAL

SCALE: 1/2" = 1'

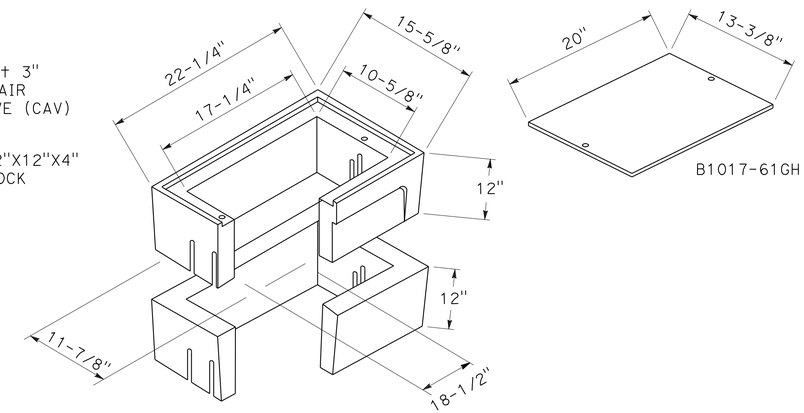

CHRISTY BOX-B1017

NO SCALE

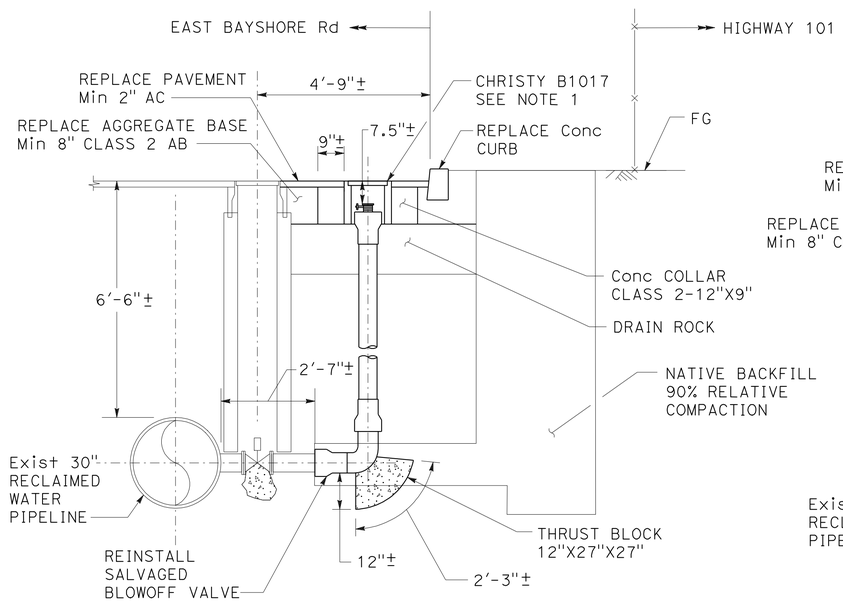

TYPICAL BLOWOFF VALVE REPLACEMENT

SCALE: 1/2" = 1'

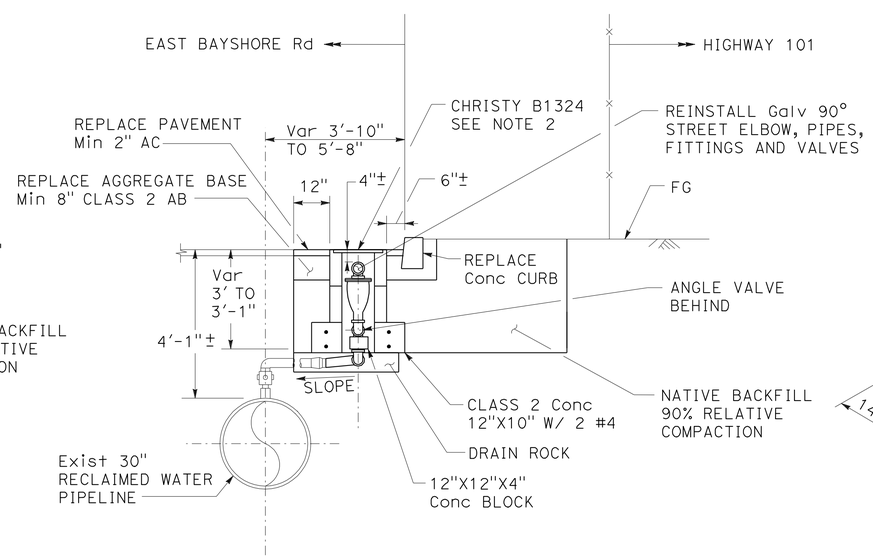

TYPICAL CAV REPLACEMENT

SCALE: 1/2" = 1'

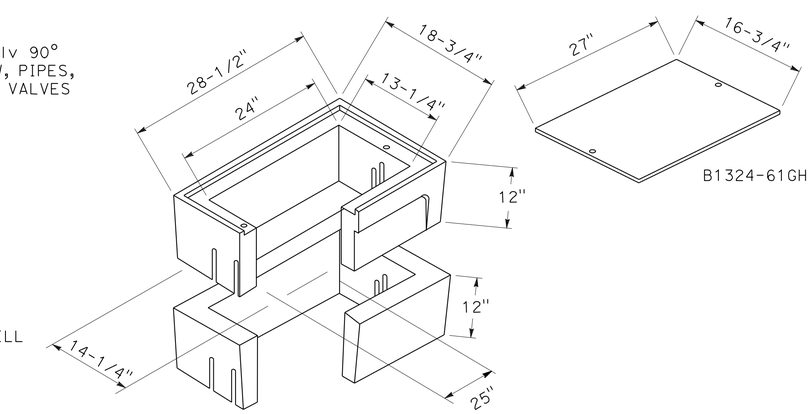

CHRISTY BOX-B1324

NO SCALE

LEGEND:

- CONCRETE
- REMOVE UTILITY

UTILITY DETAILS

SCALE AS SHOWN

UD-8

STATE OF CALIFORNIA - DEPARTMENT OF TRANSPORTATION

Caltrans

CONSULTANT FUNCTIONAL SUPERVISOR: MICHAEL LADERMAN

CALCULATED-DESIGNED BY: KAVEH FOROUHI

CHECKED BY: MICHAEL LADERMAN

REVISED BY

DATE REVISED

LAST REVISION 05/12/11 | DATE PLOTTED => 15-JUL-2011 | TIME PLOTTED => 12:30

Dist	COUNTY	ROUTE	POST MILES TOTAL PROJECT	SHEET No.	TOTAL SHEETS
04	SCI	101	48.7/52.0	372	993

REGISTERED CIVIL ENGINEER 05/13/11 DATE

7-11-11
PLANS APPROVAL DATE

REGISTERED PROFESSIONAL ENGINEER M. Laderman No. C22563 Exp. 12/31/11 CIVIL STATE OF CALIFORNIA

THE STATE OF CALIFORNIA OR ITS OFFICERS OR AGENTS SHALL NOT BE RESPONSIBLE FOR THE ACCURACY OR COMPLETENESS OF SCANNED COPIES OF THIS PLAN SHEET.

CSG CONSULTANTS, Inc.
1700 S Amphlet Blvd,
3rd Floor
San Mateo, CA 94402

Santa Clara Valley
Transportation Authority
3331 N First Street
San Jose, CA 95134

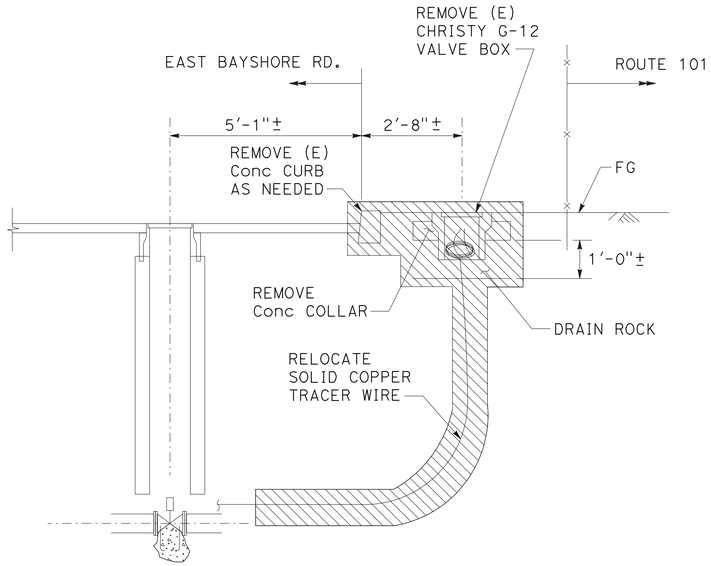

TYPICAL LOCATOR STATION REMOVAL

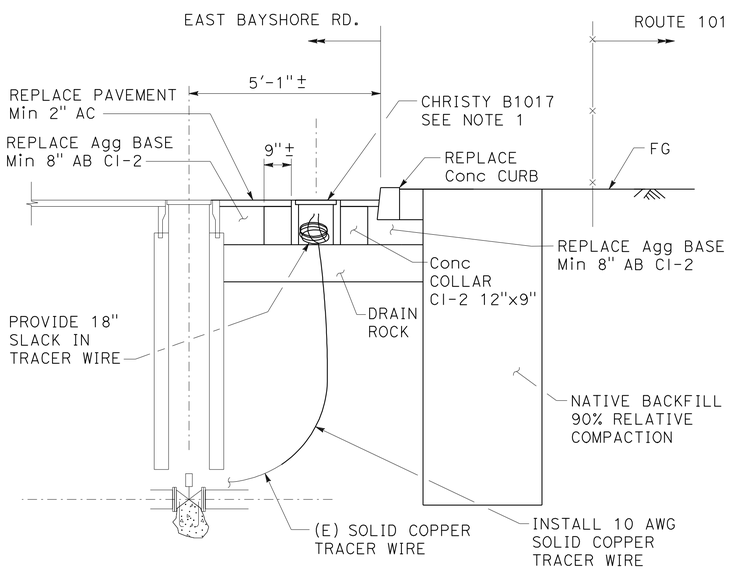

TYPICAL LOCATOR STATION REPLACEMENT

NOTES:

1. USE CHRISTY B1017 OR EQUAL H20 BOX & LID W/STEEL CHECKER PLATE LID MARKED "RECLAIMED WATER" PAINT LID PURPLE

LEGEND:

CONCRETE

REMOVE UTILITY

UTILITY DETAILS

SCALE: 1/2" = 1'

UD-9

REVISED BY	DATE REVISED
KAVEH FOROUHI	MICHAEL LADERMAN

CALCULATED-DESIGNED BY	CHECKED BY

CONSULTANT FUNCTIONAL SUPERVISOR: MICHAEL LADERMAN

STATE OF CALIFORNIA - DEPARTMENT OF TRANSPORTATION

Caltrans

LAST REVISION 05/12/11 | DATE PLOTTED => 15-JUL-2011 | TIME PLOTTED => 12:30

Dist	COUNTY	ROUTE	POST MILES TOTAL PROJECT	SHEET No.	TOTAL SHEETS
04	SCI	101	48.7/52.0	373	993

REGISTERED CIVIL ENGINEER 05/13/11 DATE

7-11-11
PLANS APPROVAL DATE

REGISTERED PROFESSIONAL ENGINEER Christopher Lillie No. C61288 Exp. 06/30/11 CIVIL STATE OF CALIFORNIA

THE STATE OF CALIFORNIA OR ITS OFFICERS OR AGENTS SHALL NOT BE RESPONSIBLE FOR THE ACCURACY OR COMPLETENESS OF SCANNED COPIES OF THIS PLAN SHEET.

URS Corporation
100 W San Fernando St
Suite 200
San Jose, CA 95113

Santa Clara Valley
Transportation Authority
3331 N First Street
San Jose, CA 95134

MINOR CONCRETE (CAP UTILITY)

SHEET	STATION	MINOR CONCRETE (CAP UTILITY)	CLASS 3 AB	WELDED WIRE FABRIC (4" x 4", W2.9 x W2.9)
		CY	CY	SQYD
UD-1	"OSN" 39+44.15 L+ TO "OSN" 40+32.82 R+	11.1	22.2	66.7
UD-2	"C" 49+43.21 R+ TO "C" 49+97.82 R+	19.4	243.0	116.4
UD-2	"ENF" 49+02.22 L+ TO "ENF" 49+57.63 L+	35.0	438.1	210.0
UD-3	"C" 68+31.79 R+ TO 68+33.46 R+	2.8	5.5	16.6
UD-3	"C" 115+50.17 R+ TO 115+51.67 R+	2.8	5.6	16.8
UD-3	"C" 115+58.62 L+ TO 115+60.09 L+	2.7	5.5	16.4
	TOTAL	73.8	719.9*	442.9

* QUANTITY INCLUDED IN PAVEMENT STRUCTURE QUANTITIES SUMMARY

RELOCATE VALVE (RECLAIMED WATER)

SHEET	STATION	RELOCATE CAV VALVE	RELOCATE BLOWOFF VALVE	RELOCATE LOCATOR STATION
		EA	EA	EA
U-3	"C" 57+70 L+		1	
U-3	"C" 60+90 L+	1		
U-3	"C" 65+00 L+			1
U-8	"SANN" 122+40 L+	1		
U-10	"C" 142+80 L+	1		
	TOTAL	3	1	1

REMOVE GAS PIPE

SHEET	STATION	REMOVE GAS PIPE
		LF
U-15	"C" 187+10 L+	20.0
	TOTAL	20.0

UTILITY QUANTITIES
UQ-1

STATE OF CALIFORNIA - DEPARTMENT OF TRANSPORTATION
Caltrans

CONSULTANT FUNCTIONAL SUPERVISOR: CHRISTOPHER LILLIE
CALCULATED-DESIGNED BY: SARAH CHRISTENSEN
CHECKED BY: LAN HO
REVISED BY: S C
DATE REVISED: 05/12/11

LAST REVISION 05-12-11
DATE PLOTTED => 15-JUL-2011
TIME PLOTTED => 12:30

Dist	COUNTY	ROUTE	POST MILES TOTAL PROJECT	SHEET No.	TOTAL SHEETS
04	SCI	101	48.7/52.0	374	993

REGISTERED CIVIL ENGINEER 01/31/11 DATE

7-11-11
PLANS APPROVAL DATE

REGISTERED PROFESSIONAL ENGINEER RUTA JARIWALA No. C-73840 Exp. 6/30/11 CIVIL STATE OF CALIFORNIA

THE STATE OF CALIFORNIA OR ITS OFFICERS OR AGENTS SHALL NOT BE RESPONSIBLE FOR THE ACCURACY OR COMPLETENESS OF SCANNED COPIES OF THIS PLAN SHEET.

URS Corporation
100 W San Fernando St
Suite 200
San Jose, CA 95113

Santa Clara Valley
Transportation Authority
3331 N First Street
San Jose, CA 95134

NOTES

1. LOCATION OF CONSTRUCTION AREA SIGNS SHOWN ARE APPROXIMATE, EXACT LOCATION AND POSITION OF SIGNS TO BE DETERMINED BY THE ENGINEER.
2. FOR SPECIAL SIGN DETAILS, SEE SHEET CS-22 THRU CS-26.
3. ALL DIMENSIONS ARE IN INCHES UNLESS OTHERWISE SHOWN.
4. DURING AN EVENT AT THE AMPHITHEATRE, THIS RAMP SHALL REMAIN OPEN DURING CLOSURE HOURS. ADJACENT RAMPS TO THE NORTH AND SOUTH OF THIS RAMP SHALL ALSO REMAIN OPEN.

LEGEND

- ONE POST CONSTRUCTION AREA SIGN LOCATION
- TWO POST CONSTRUCTION AREA SIGN LOCATION
- DIRECTION OF DETOUR
- PCMS — PORTABLE CHANGEABLE MESSAGE SIGN
- ✱ — CONSTRUCTION AREA CLOSED TO TRAFFIC
- (X) — CONSTRUCTION AREA SIGN NUMBER

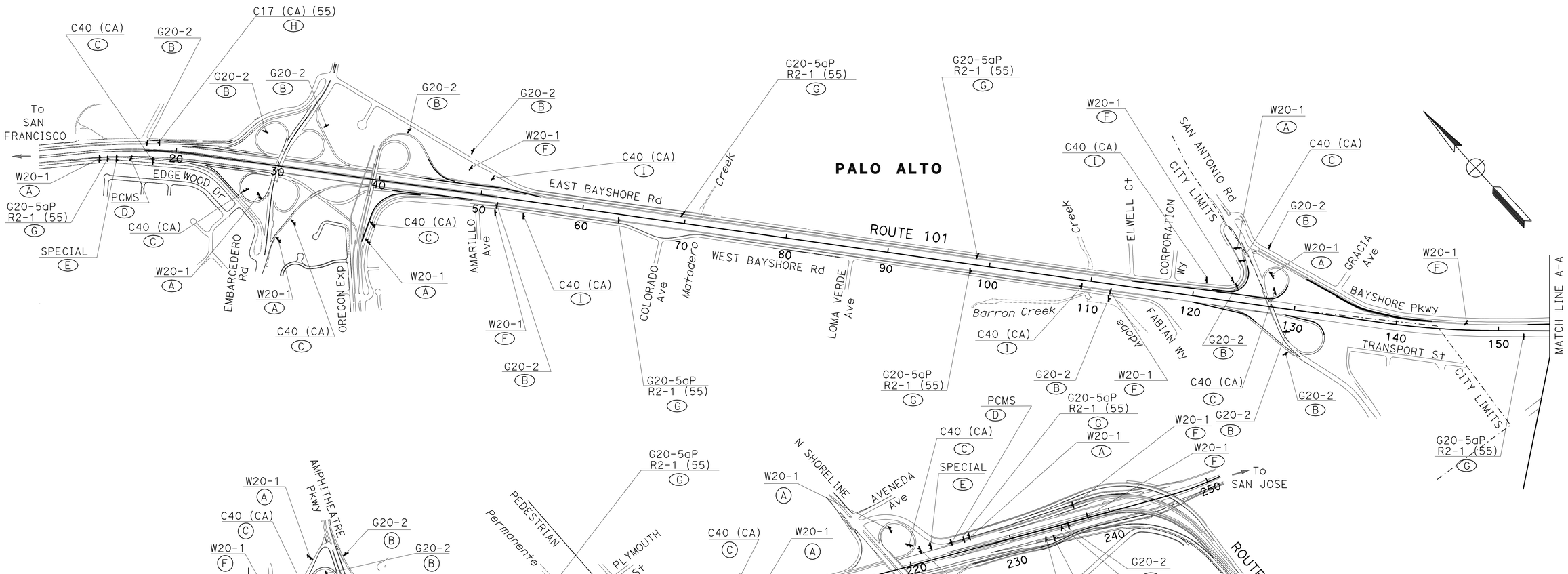

CONSTRUCTION AREA SIGNS

NO SCALE

THIS PLAN ACCURATE FOR CONSTRUCTION AREA SIGN WORK ONLY

CS-1

STATE OF CALIFORNIA - DEPARTMENT OF TRANSPORTATION

Caltrans

CONSULTANT FUNCTIONAL SUPERVISOR: CHRISTOPHER LILLIE

CALCULATED-DESIGNED BY: AILEEN CABICO

CHECKED BY: RUTA JARIWALA

REVISED BY: A C

DATE REVISED: 01/24/11

LAST REVISION 01-24-11 | DATE PLOTTED => 15-JUL-2011 | TIME PLOTTED => 12:30

BORDER LAST REVISED 7/2/2010 | USERNAME => s124496 | DGN FILE => 04000011261a001.dgn | RELATIVE BORDER SCALE IS IN INCHES 0 1 2 3 | UNIT 0712 | PROJECT NUMBER & PHASE 04000011261

Dist	COUNTY	ROUTE	POST MILES TOTAL PROJECT	SHEET No.	TOTAL SHEETS
04	SCI	101	48.7/52.0	375	993

REGISTERED CIVIL ENGINEER 05/13/11 DATE

7-11-11
PLANS APPROVAL DATE

REGISTERED PROFESSIONAL ENGINEER
RUTA JARIWALA
No. C-73840
Exp. 6/30/11
CIVIL
STATE OF CALIFORNIA

THE STATE OF CALIFORNIA OR ITS OFFICERS OR AGENTS SHALL NOT BE RESPONSIBLE FOR THE ACCURACY OR COMPLETENESS OF SCANNED COPIES OF THIS PLAN SHEET.

URS Corporation
100 W San Fernando St
Suite 200
San Jose, CA 95113

Santa Clara Valley
Transportation Authority
3331 N First Street
San Jose, CA 95134

NOTES

1. THE PCMS SHOULD BE INSTALLED AND TURNED ON SEVEN (7) DAYS PRIOR TO US 101 SB ON-RAMP CLOUSURE. THE PCMS MESSAGE SHOULD READ.....

US 101 SB ON-RAMP CLOSED ON	→	DATE & TIME

2. DURING US 101 SB ON-RAMP CLOSURE, THE PCMS MESSAGE SHOULD READ.....

US 101 SB ON-RAMP CLOSED	→	USE DETOUR

3. THE SPECIAL A SIGN SHOULD BE INSTALLED SEVEN (7) DAYS PRIOR TO US 101 ON-RAMP CLOSURE.

US 101 SB ON-RAMP CLOSURE

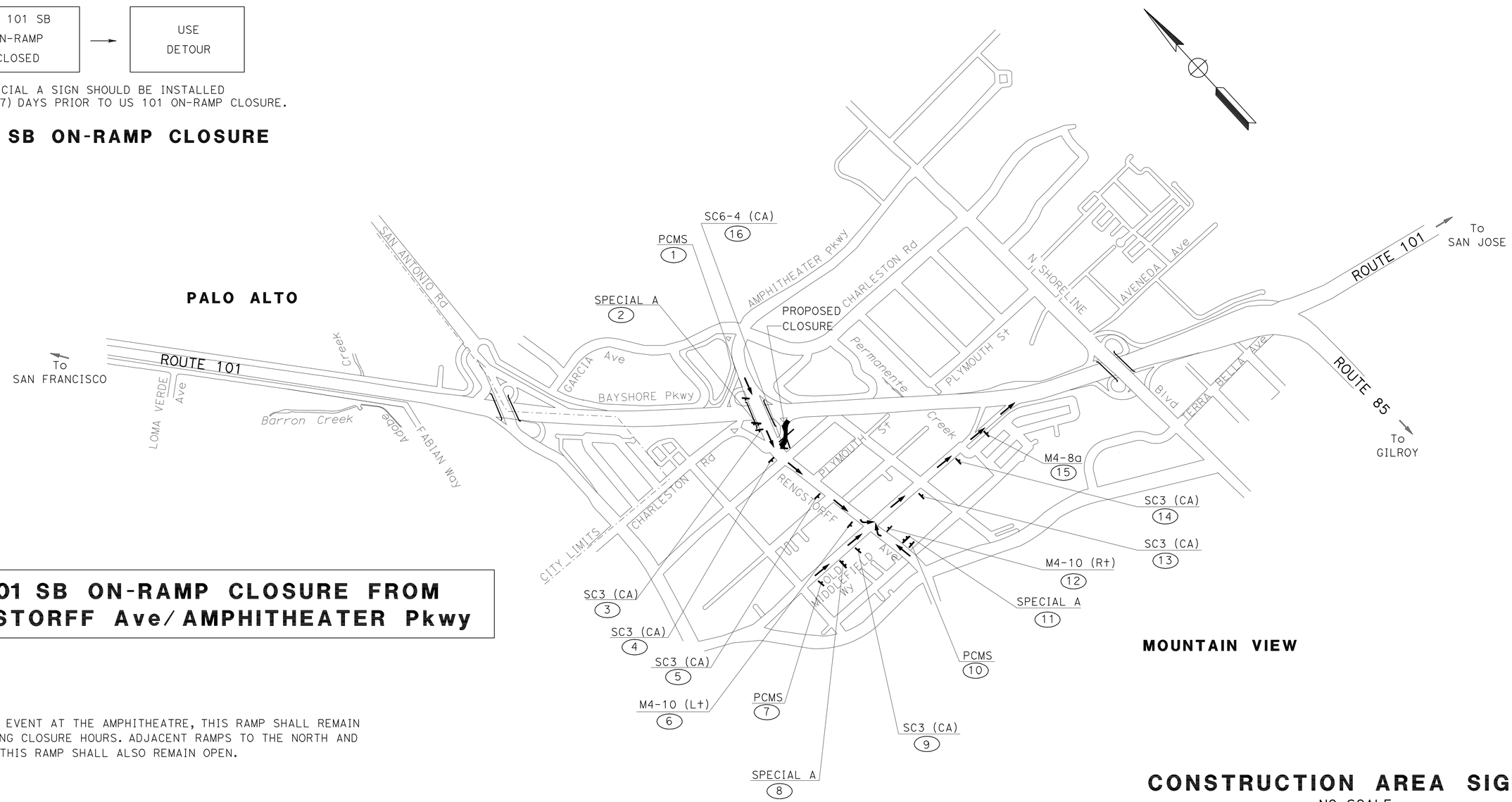

US 101 SB ON-RAMP CLOSURE FROM RENGSTORFF Ave/ AMPHITHEATER Pkwy

NOTE: DURING AN EVENT AT THE AMPHITHEATRE, THIS RAMP SHALL REMAIN OPEN DURING CLOSURE HOURS. ADJACENT RAMPS TO THE NORTH AND SOUTH OF THIS RAMP SHALL ALSO REMAIN OPEN.

FOR NOTES AND LEGEND SEE SHEET CS-1	FOR SPECIAL SIGN DETAILS SEE SHEETS CS-23 THROUGH CS-27.

THIS PLAN ACCURATE FOR CONSTRUCTION AREA SIGN WORK ONLY

CONSTRUCTION AREA SIGNS

NO SCALE

CS-2

REVISED BY	DATE REVISED
A C	05/11/11

AILEEN CABICO — CALCULATED-DESIGNED BY
RUTA JARIWALA — CHECKED BY
CHRISTOPHER LILLIE — CONSULTANT FUNCTIONAL SUPERVISOR

STATE OF CALIFORNIA - DEPARTMENT OF TRANSPORTATION
Caltrans

LAST REVISION 05-11-11 | DATE PLOTTED => 15-JUL-2011 | TIME PLOTTED => 12:30

Dist	COUNTY	ROUTE	POST MILES TOTAL PROJECT	SHEET No.	TOTAL SHEETS
04	SCI	101	48.7/52.0	376	993

REGISTERED CIVIL ENGINEER 05/13/11 DATE

7-11-11
PLANS APPROVAL DATE

REGISTERED PROFESSIONAL ENGINEER RUTA JARIWALA No. C-73840 Exp. 6/30/11 CIVIL STATE OF CALIFORNIA

THE STATE OF CALIFORNIA OR ITS OFFICERS OR AGENTS SHALL NOT BE RESPONSIBLE FOR THE ACCURACY OR COMPLETENESS OF SCANNED COPIES OF THIS PLAN SHEET.

URS Corporation
100 W San Fernando St
Suite 200
San Jose, CA 95113

Santa Clara Valley
Transportation Authority
3331 N First Street
San Jose, CA 95134

NOTES

1. THE PCMS SHOULD BE INSTALLED AND TURNED ON SEVEN (7) DAYS PRIOR TO US 101 NB ON-RAMP CLOSURE. THE PCMS SHOULD READ.....

US 101 NB ON-RAMP CLOSED ON	→	DATE & TIME

2. DURING US 101 NB ON-RAMP CLOSURE, THE PCMS MESSAGE SHOULD READ.....

US 101 NB ON-RAMP CLOSED	→	USE DETOUR

3. THE SPECIAL B SIGN SHOULD BE INSTALLED SEVEN (7) DAYS PRIOR TO US 101 NB ON-RAMP CLOSURE.

US 101 NB ON-RAMP CLOSURE

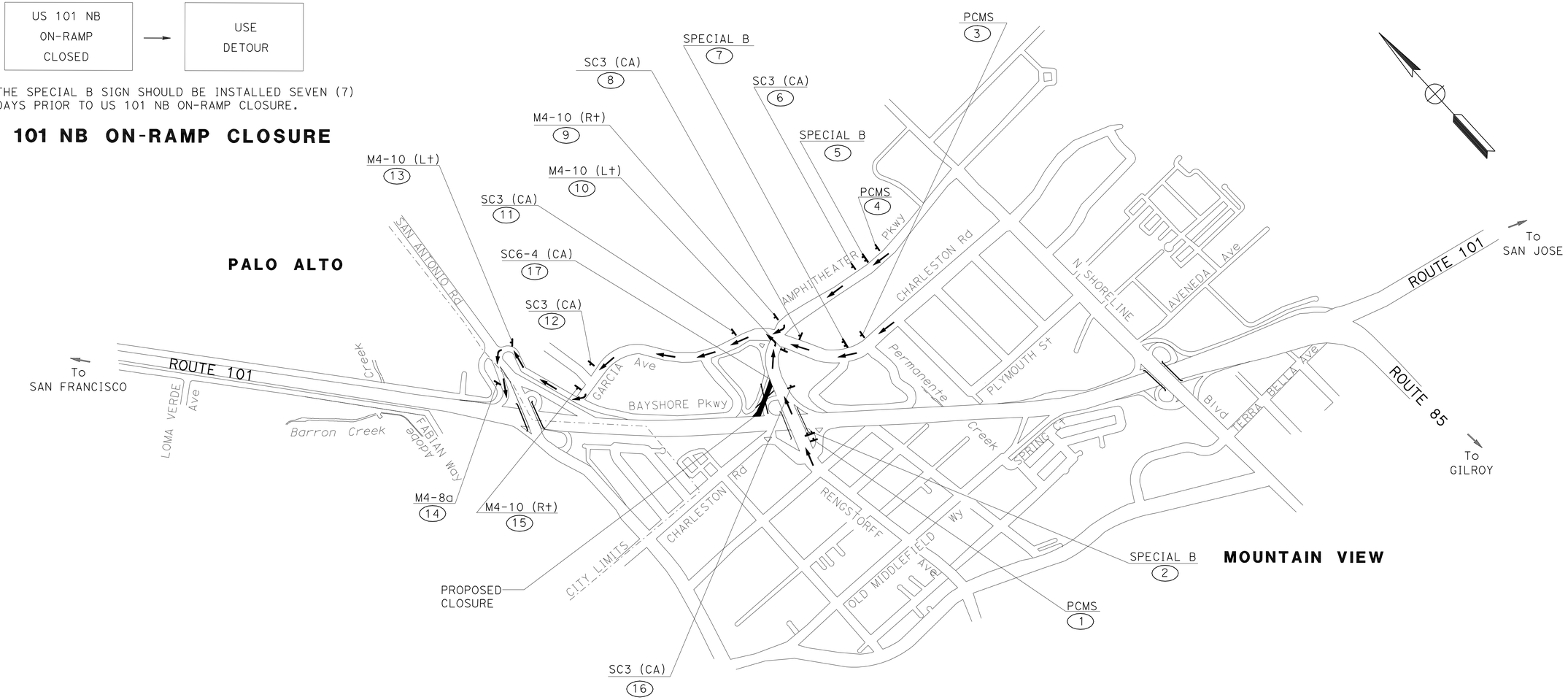

NOTE: DURING AN EVENT AT THE AMPHITHEATRE, THIS RAMP SHALL REMAIN OPEN DURING CLOSURE HOURS. ADJACENT RAMPS TO THE NORTH AND SOUTH OF THIS RAMP SHALL ALSO REMAIN OPEN.

FOR NOTES AND LEGEND SEE SHEET CS-1	FOR SPECIAL SIGN DETAILS SEE SHEETS CS-23 THROUGH CS-27.

US 101 NB ON-RAMP CLOSURE FROM RENGSTORFF Ave/ AMPHITHEATER Pkwy

THIS PLAN ACCURATE FOR CONSTRUCTION AREA SIGN WORK ONLY

CONSTRUCTION AREA SIGNS
NO SCALE

CS-3

A C	05/11/11	AILEEN CABICO	RUTA JARIWALA
REVISED BY	DATE REVISED	CALCULATED-DESIGNED BY	CHECKED BY

CONSULTANT FUNCTIONAL SUPERVISOR: CHRISTOPHER LILLIE

STATE OF CALIFORNIA - DEPARTMENT OF TRANSPORTATION

Caltrans

LAST REVISION 05-11-11 | DATE PLOTTED => 15-JUL-2011 | TIME PLOTTED => 12:30

Dist	COUNTY	ROUTE	POST MILES TOTAL PROJECT	SHEET No.	TOTAL SHEETS
04	SCI	101	48.7/52.0	377	993

REGISTERED CIVIL ENGINEER 05/13/11 DATE

7-11-11
PLANS APPROVAL DATE

REGISTERED PROFESSIONAL ENGINEER RUTA JARIWALA No. C-73840 Exp. 6/30/11 CIVIL STATE OF CALIFORNIA

THE STATE OF CALIFORNIA OR ITS OFFICERS OR AGENTS SHALL NOT BE RESPONSIBLE FOR THE ACCURACY OR COMPLETENESS OF SCANNED COPIES OF THIS PLAN SHEET.

URS Corporation
100 W San Fernando St
Suite 200
San Jose, CA 95113

Santa Clara Valley
Transportation Authority
3331 N First Street
San Jose, CA 95134

NOTES

1. THE PCMS SHOULD BE INSTALLED AND TURNED ON SEVEN (7) DAYS PRIOR TO NB AMPHITHEATER Pkwy OFF-RAMP CLOSURE. THE PCMS MESSAGE SHOULD READ.....

NB AMPHITHEATER Pkwy OFF-RAMP CLOSED ON	→	DATE & TIME

2. DURING NB AMPHITHEATER Pkwy OFF-RAMP CLOSURE, THE PCMS MESSAGE SHOULD READ.....

NB AMPHITHEATER Pkwy OFF-RAMP CLOSED	→	USE DETOUR

3. THE SPECIAL C SIGN SHOULD BE INSTALLED SEVEN (7) DAYS PRIOR TO US 101 NB OFF-RAMP CLOSURE.

NB AMPHITHEATER Pkwy OFF-RAMP CLOSURE

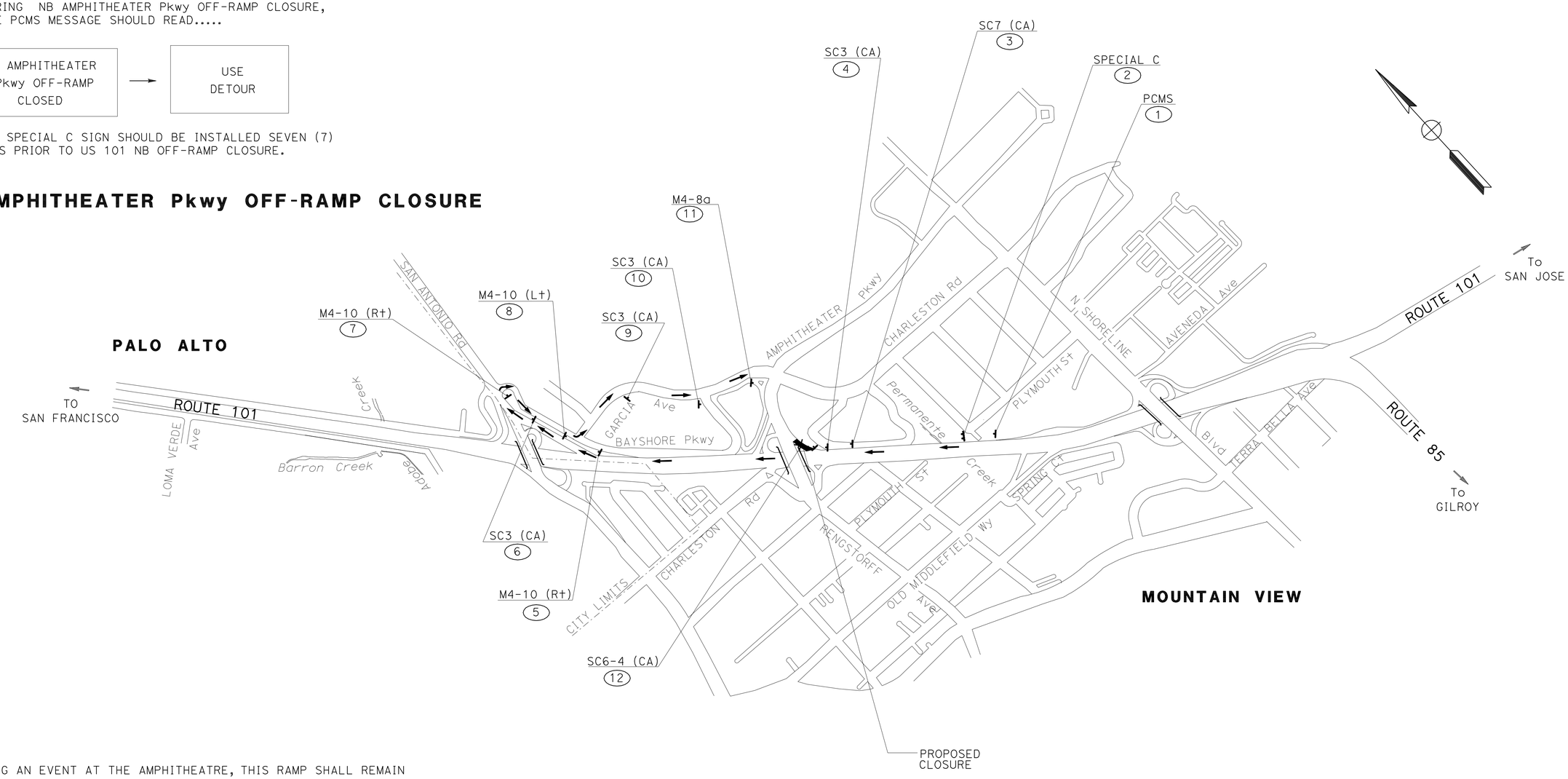

NOTE: DURING AN EVENT AT THE AMPHITHEATRE, THIS RAMP SHALL REMAIN OPEN DURING CLOSURE HOURS. ADJACENT RAMPS TO THE NORTH AND SOUTH OF THIS RAMP SHALL ALSO REMAIN OPEN.

FOR NOTES AND LEGEND SEE SHEET CS-1	FOR SPECIAL SIGN DETAILS SEE SHEETS CS-23 THROUGH CS-27.

US 101 NB OFF-RAMP CLOSURE TO NB AMPHITHEATER Pkwy

THIS PLAN ACCURATE FOR CONSTRUCTION AREA SIGN WORK ONLY

CONSTRUCTION AREA SIGNS

NO SCALE

CS-4

REVISED BY	DATE REVISED
A C	05/11/11

AILEEN CABICO — RUTA JARIWALA

CALCULATED-DESIGNED BY — CHECKED BY

CONSULTANT FUNCTIONAL SUPERVISOR — CHRISTOPHER LILLIE

STATE OF CALIFORNIA - DEPARTMENT OF TRANSPORTATION

Caltrans

LAST REVISION 05-11-11 | DATE PLOTTED => 15-JUL-2011 | TIME PLOTTED => 12:30

Dist	COUNTY	ROUTE	POST MILES TOTAL PROJECT	SHEET No.	TOTAL SHEETS
04	SCI	101	48.7/52.0	378	993

REGISTERED CIVIL ENGINEER 05/13/11 DATE

7-11-11
PLANS APPROVAL DATE

REGISTERED PROFESSIONAL ENGINEER RUTA JARIWALA No. C-73840 Exp. 6/30/11 CIVIL STATE OF CALIFORNIA

THE STATE OF CALIFORNIA OR ITS OFFICERS OR AGENTS SHALL NOT BE RESPONSIBLE FOR THE ACCURACY OR COMPLETENESS OF SCANNED COPIES OF THIS PLAN SHEET.

URS Corporation
100 W San Fernando St
Suite 200
San Jose, CA 95113

Santa Clara Valley
Transportation Authority
3331 N First Street
San Jose, CA 95134

NOTES

1. THE PCMS SHOULD BE INSTALLED AND TURNED ON SEVEN (7) DAYS PRIOR TO NB SAN ANTONIO Rd OFF-RAMP CLOSURE. THE PCMS MESSAGE SHOULD READ.....

NB SAN ANTONIO Rd OFF-RAMP CLOSED ON → DATE & TIME

2. DURING NB SAN ANTONIO Rd OFF-RAMP CLOSURE, THE PCMS MESSAGE SHOULD READ.....

NB SAN ANTONIO Rd OFF-RAMP CLOSED → USE DETOUR

3. THE SPECIAL D SIGN SHOULD BE INSTALLED SEVEN (7) DAYS PRIOR TO US 101 NB OFF-RAMP CLOSURE.

NB SAN ANTONIO Rd OFF-RAMP CLOSURE

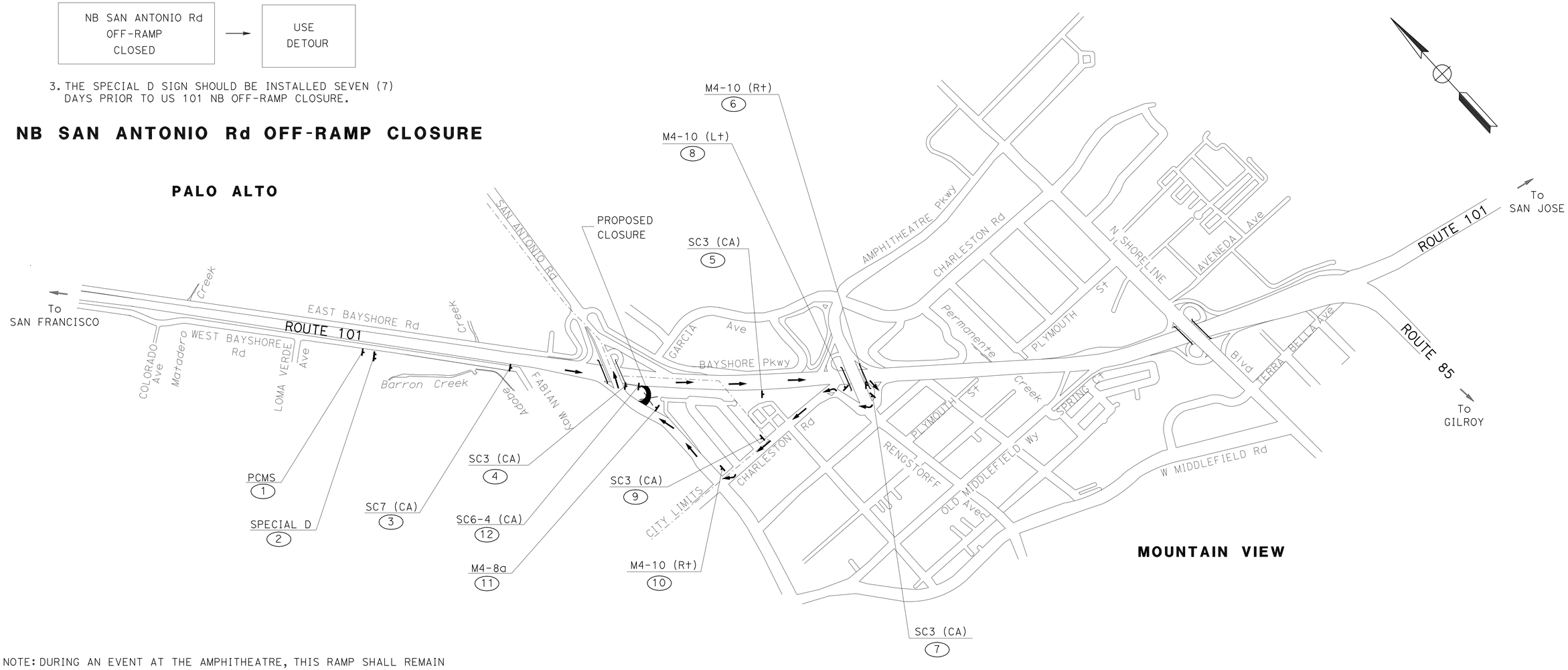

NOTE: DURING AN EVENT AT THE AMPHITHEATRE, THIS RAMP SHALL REMAIN OPEN DURING CLOSURE HOURS. ADJACENT RAMPS TO THE NORTH AND SOUTH OF THIS RAMP SHALL ALSO REMAIN OPEN.

FOR NOTES AND LEGEND SEE SHEET CS-1	FOR SPECIAL SIGN DETAILS SEE SHEETS CS-23 THROUGH CS-27.

US 101 SB OFF-RAMP CLOSURE TO NB SAN ANTONIO Rd

THIS PLAN ACCURATE FOR CONSTRUCTION AREA SIGN WORK ONLY

CONSTRUCTION AREA SIGNS

NO SCALE

CS-5

REVISED BY	DATE REVISED
A C	05/11/11

AILEEN CABICO — RUTA JARIWALA

CALCULATED-DESIGNED BY — CHECKED BY

CONSULTANT FUNCTIONAL SUPERVISOR — CHRISTOPHER LILLIE

STATE OF CALIFORNIA - DEPARTMENT OF TRANSPORTATION — Caltrans

LAST REVISION 05-11-11 | DATE PLOTTED => 15-JUL-2011 | TIME PLOTTED => 12:30

Dist	COUNTY	ROUTE	POST MILES TOTAL PROJECT	SHEET No.	TOTAL SHEETS
04	SCI	101	48.7/52.0	379	993

REGISTERED CIVIL ENGINEER 05/13/11 DATE

7-11-11
PLANS APPROVAL DATE

REGISTERED PROFESSIONAL ENGINEER RUTA JARIWALA No. C-73840 Exp. 6/30/11 CIVIL STATE OF CALIFORNIA

THE STATE OF CALIFORNIA OR ITS OFFICERS OR AGENTS SHALL NOT BE RESPONSIBLE FOR THE ACCURACY OR COMPLETENESS OF SCANNED COPIES OF THIS PLAN SHEET.

URS Corporation
100 W San Fernando St
Suite 200
San Jose, CA 95113

Santa Clara Valley
Transportation Authority
3331 N First Street
San Jose, CA 95134

NOTES

1. THE PCMS SHOULD BE INSTALLED AND TURNED ON SEVEN (7) DAYS PRIOR TO US 101 SB OFF-RAMP CLOSURE. THE PCMS MESSAGE SHOULD READ.....

US 101 SB OFF-RAMP CLOSED ON → DATE & TIME

2. DURING US 101 SB OFF-RAMP CLOSURE, THE PCMS MESSAGE SHOULD READ.....

US 101 SB OFF-RAMP CLOSED → USE DETOUR

3. THE SPECIAL E SIGN SHOULD BE INSTALLED SEVEN (7) DAYS PRIOR TO US 101 SB OFF-RAMP CLOSURE.

US 101 SB OFF-RAMP CLOSURE

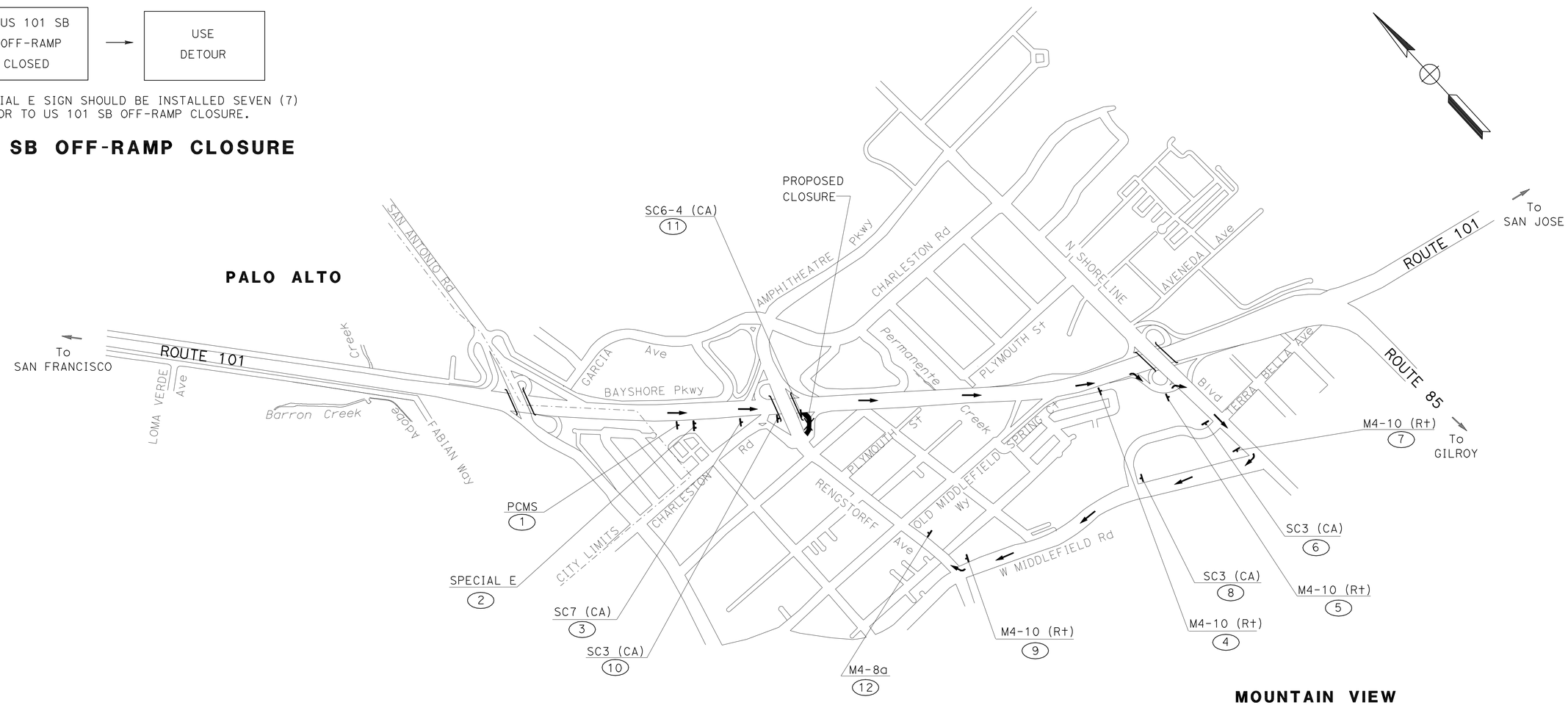

NOTE: DURING AN EVENT AT THE AMPHITHEATRE, THIS RAMP SHALL REMAIN OPEN DURING CLOSURE HOURS. ADJACENT RAMPS TO THE NORTH AND SOUTH OF THIS RAMP SHALL ALSO REMAIN OPEN.

FOR NOTES AND LEGEND SEE SHEET CS-1	FOR SPECIAL SIGN DETAILS SEE SHEETS CS-23 THROUGH CS-27.

US 101 SB OFF RAMP CLOSURE TO RENGSTORFF Ave

THIS PLAN ACCURATE FOR CONSTRUCTION AREA SIGN WORK ONLY

CONSTRUCTION AREA SIGNS

NO SCALE

CS-6

REVISED BY	DATE REVISED
A C	05/11/11

AILEEN CABICO — CALCULATED-DESIGNED BY
RUTA JARIWALA — CHECKED BY
CHRISTOPHER LILLIE — CONSULTANT FUNCTIONAL SUPERVISOR

STATE OF CALIFORNIA - DEPARTMENT OF TRANSPORTATION

LAST REVISION 05-11-11 | DATE PLOTTED => 15-JUL-2011 | TIME PLOTTED => 12:31

Dist	COUNTY	ROUTE	POST MILES TOTAL PROJECT	SHEET No.	TOTAL SHEETS
04	SCI	101	48.7/52.0	380	993

REGISTERED CIVIL ENGINEER 05/13/11 DATE

7-11-11
PLANS APPROVAL DATE

REGISTERED PROFESSIONAL ENGINEER RUTA JARIWALA No. C-73840 Exp. 6/30/11 CIVIL STATE OF CALIFORNIA

THE STATE OF CALIFORNIA OR ITS OFFICERS OR AGENTS SHALL NOT BE RESPONSIBLE FOR THE ACCURACY OR COMPLETENESS OF SCANNED COPIES OF THIS PLAN SHEET.

URS Corporation
100 W San Fernando St
Suite 200
San Jose, CA 95113

Santa Clara Valley
Transportation Authority
3331 N First Street
San Jose, CA 95134

NOTES

1. THE PCMS SHOULD BE INSTALLED AND TURNED ON SEVEN (7) DAYS PRIOR TO US 101 NB ON-RAMP CLOSURE. THE PCMS MESSAGE SHOULD READ.....

US 101 NB ON-RAMP CLOSED ON	→	DATE & TIME

2. DURING US 101 NB ON-RAMP CLOSURE, THE PCMS MESSAGE SHOULD READ.....

US 101 NB ON-RAMP CLOSED	→	USE DETOUR

3. THE SPECIAL B SIGN SHOULD BE INSTALLED SEVEN (7) DAYS PRIOR TO US 101 NB ON-RAMP CLOSURE.

US 101 NB ON-RAMP CLOSURE

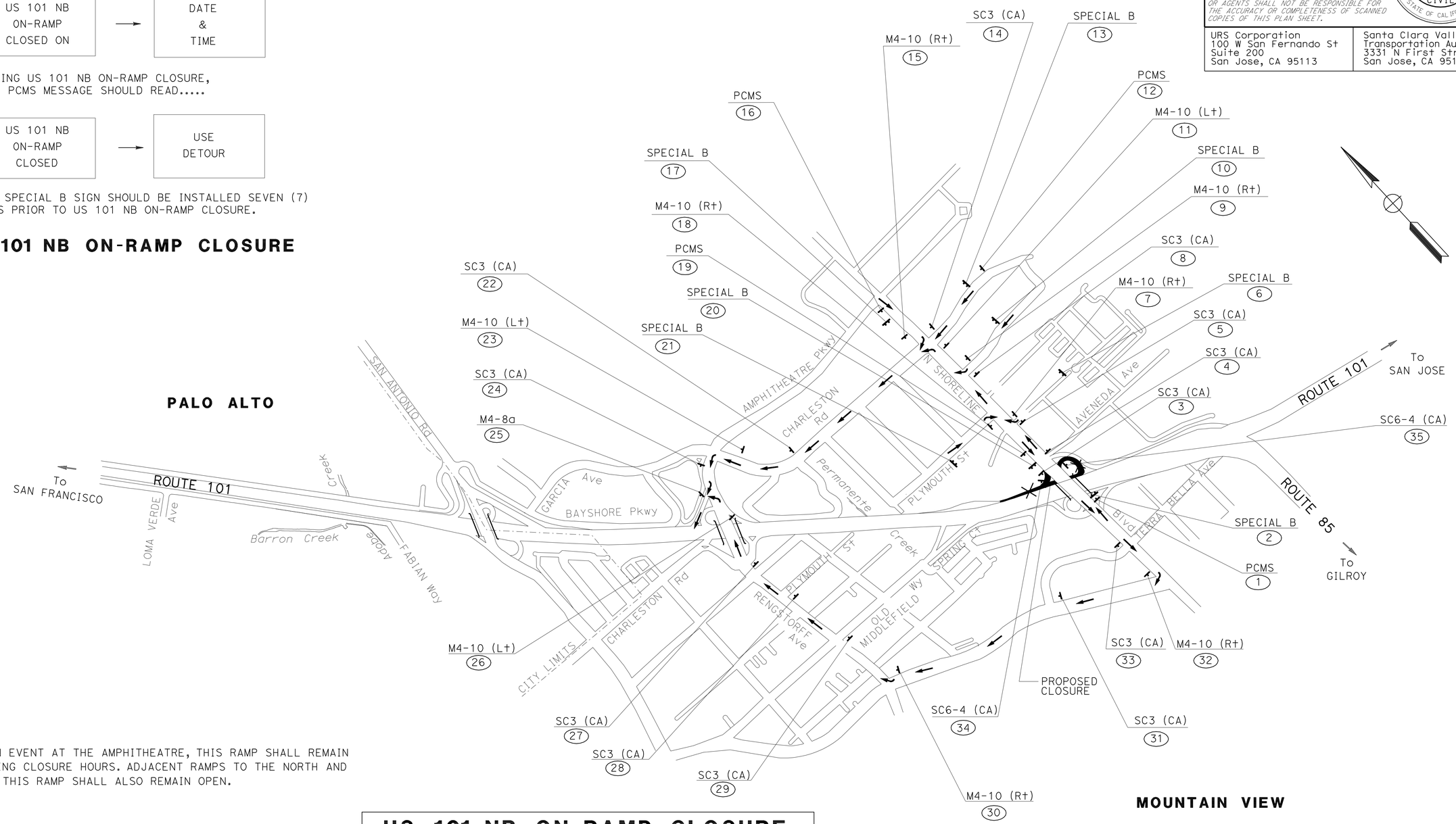

NOTE: DURING AN EVENT AT THE AMPHITHEATRE, THIS RAMP SHALL REMAIN OPEN DURING CLOSURE HOURS. ADJACENT RAMPS TO THE NORTH AND SOUTH OF THIS RAMP SHALL ALSO REMAIN OPEN.

US 101 NB ON-RAMP CLOSURE FROM N SHORELINE Blvd

FOR NOTES AND LEGEND SEE SHEET CS-1	FOR SPECIAL SIGN DETAILS SEE SHEETS CS-23 THROUGH CS-27.

CONSTRUCTION AREA SIGNS

NO SCALE

CS-7

THIS PLAN ACCURATE FOR CONSTRUCTION AREA SIGN WORK ONLY

A C	05/11/11
REVISED BY	DATE REVISED
AILEEN CABICO	RUTA JARIWALA
CALCULATED-DESIGNED BY	CHECKED BY
CONSULTANT FUNCTIONAL SUPERVISOR	CHRISTOPHER LILLIE

STATE OF CALIFORNIA - DEPARTMENT OF TRANSPORTATION
Caltrans

LAST REVISION 05-11-11 | DATE PLOTTED => 15-JUL-2011 | TIME PLOTTED => 12:47

Dist	COUNTY	ROUTE	POST MILES TOTAL PROJECT	SHEET No.	TOTAL SHEETS
04	SCI	101	48.7/52.0	381	993

REGISTERED CIVIL ENGINEER 05/13/11 DATE

7-11-11
PLANS APPROVAL DATE

REGISTERED PROFESSIONAL ENGINEER RUTA JARIWALA No. C-73840 Exp. 6/30/11 CIVIL STATE OF CALIFORNIA

THE STATE OF CALIFORNIA OR ITS OFFICERS OR AGENTS SHALL NOT BE RESPONSIBLE FOR THE ACCURACY OR COMPLETENESS OF SCANNED COPIES OF THIS PLAN SHEET.

URS Corporation
100 W San Fernando St
Suite 200
San Jose, CA 95113

Santa Clara Valley
Transportation Authority
3331 N First Street
San Jose, CA 95134

NOTES

1. THE PCMS SHOULD BE INSTALLED AND TURNED ON SEVEN (7) DAYS PRIOR TO US 101 NB ON-RAMP CLOSURE. THE PCMS MESSAGE SHOULD READ.....

US 101 NB ON-RAMP CLOSED ON	→	DATE & TIME

2. DURING US 101 NB ON-RAMP CLOSURE, THE PCMS MESSAGE SHOULD READ.....

US 101 NB ON-RAMP CLOSED	→	USE DETOUR

3. THE SPECIAL B SIGN SHOULD BE INSTALLED SEVEN (7) DAYS PRIOR TO US 101 NB ON-RAMP CLOSURE.

US 101 NB ON-RAMP CLOSURE

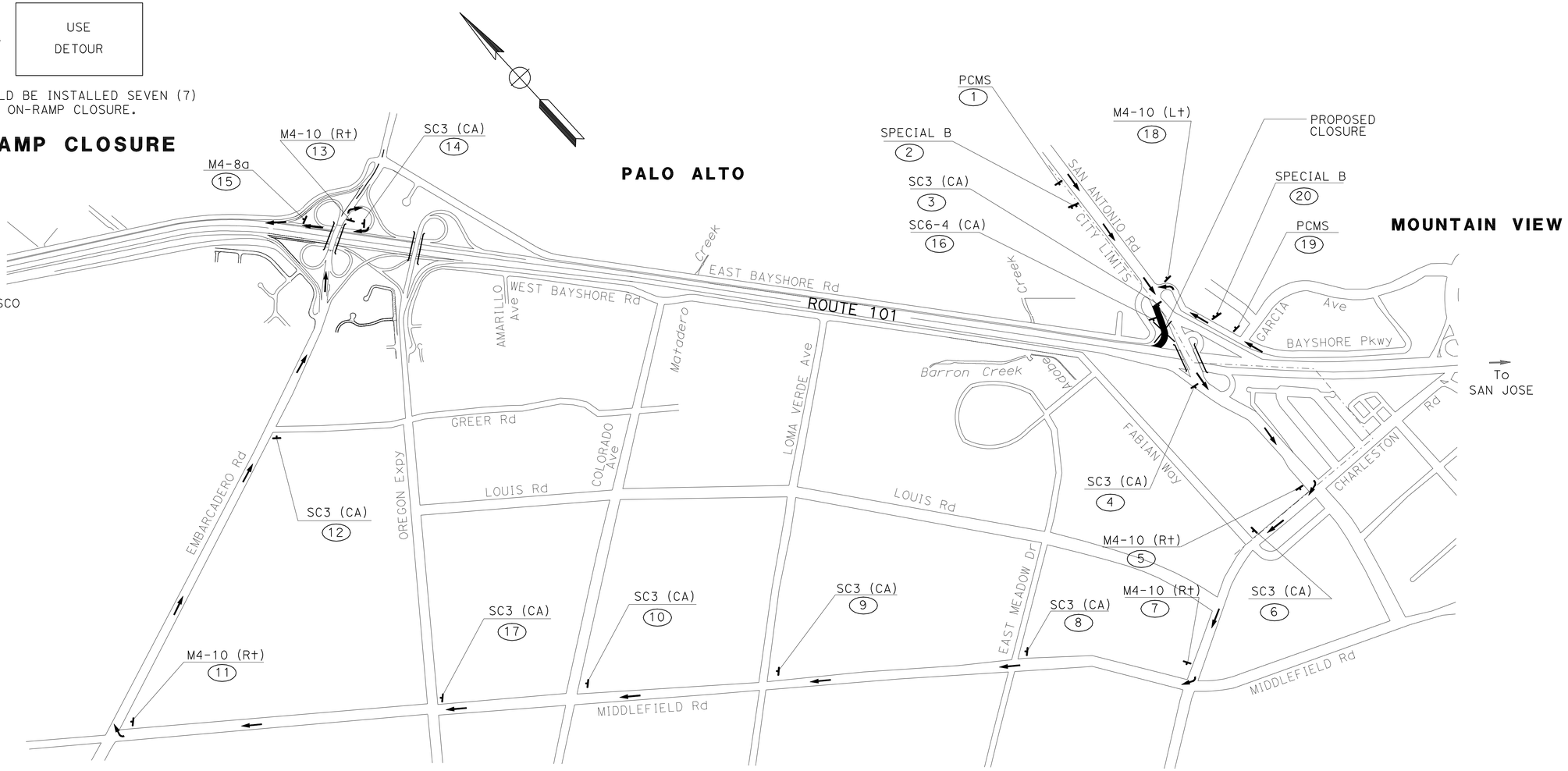

NOTE: DURING AN EVENT AT THE AMPHITHEATRE, THIS RAMP SHALL REMAIN OPEN DURING CLOSURE HOURS. ADJACENT RAMPS TO THE NORTH AND SOUTH OF THIS RAMP SHALL ALSO REMAIN OPEN.

FOR NOTES AND LEGEND SEE SHEET CS-1	FOR SPECIAL SIGN DETAILS SEE SHEETS CS-23 THROUGH CS-27.

US 101 NB ON-RAMP CLOSURE FROM SB SAN ANTONIO Rd

THIS PLAN ACCURATE FOR CONSTRUCTION AREA SIGN WORK ONLY

CONSTRUCTION AREA SIGNS

NO SCALE

CS-8

STATE OF CALIFORNIA - DEPARTMENT OF TRANSPORTATION
Caltrans

CONSULTANT FUNCTIONAL SUPERVISOR: CHRISTOPHER LILLIE
CALCULATED-DESIGNED BY: AILEEN CABICO
CHECKED BY: RUTA JARIWALA
REVISED BY: A C
DATE REVISED: 05/11/11

LAST REVISION 05-11-11
DATE PLOTTED => 15-JUL-2011
TIME PLOTTED => 12:47

Dist	COUNTY	ROUTE	POST MILES TOTAL PROJECT	SHEET No.	TOTAL SHEETS
04	SCI	101	48.7/52.0	382	993

REGISTERED CIVIL ENGINEER 05/13/11 DATE

7-11-11
PLANS APPROVAL DATE

REGISTERED PROFESSIONAL ENGINEER RUTA JARIWALA No. C-73840 Exp. 6/30/11 CIVIL STATE OF CALIFORNIA

THE STATE OF CALIFORNIA OR ITS OFFICERS OR AGENTS SHALL NOT BE RESPONSIBLE FOR THE ACCURACY OR COMPLETENESS OF SCANNED COPIES OF THIS PLAN SHEET.

URS Corporation
100 W San Fernando St
Suite 200
San Jose, CA 95113

Santa Clara Valley
Transportation Authority
3331 N First Street
San Jose, CA 95134

NOTES

1. THE PCMS SHOULD BE INSTALLED AND TURNED ON SEVEN (7) DAYS PRIOR TO US 101 NB OFF-RAMP CLOSURE. THE PCMS MESSAGE SHOULD READ.....

US 101 NB OFF-RAMP CLOSED ON	→	DATE & TIME

2. DURING US 101 NB OFF-RAMP CLOSURE, THE PCMS MESSAGE SHOULD READ.....

US 101 NB OFF-RAMP CLOSED	→	USE DETOUR

3. THE SPECIAL H SIGN SHOULD BE INSTALLED SEVEN (7) DAYS PRIOR TO US 101 NB OFF-RAMP CLOSURE.

US 101 NB OFF-RAMP CLOSURE

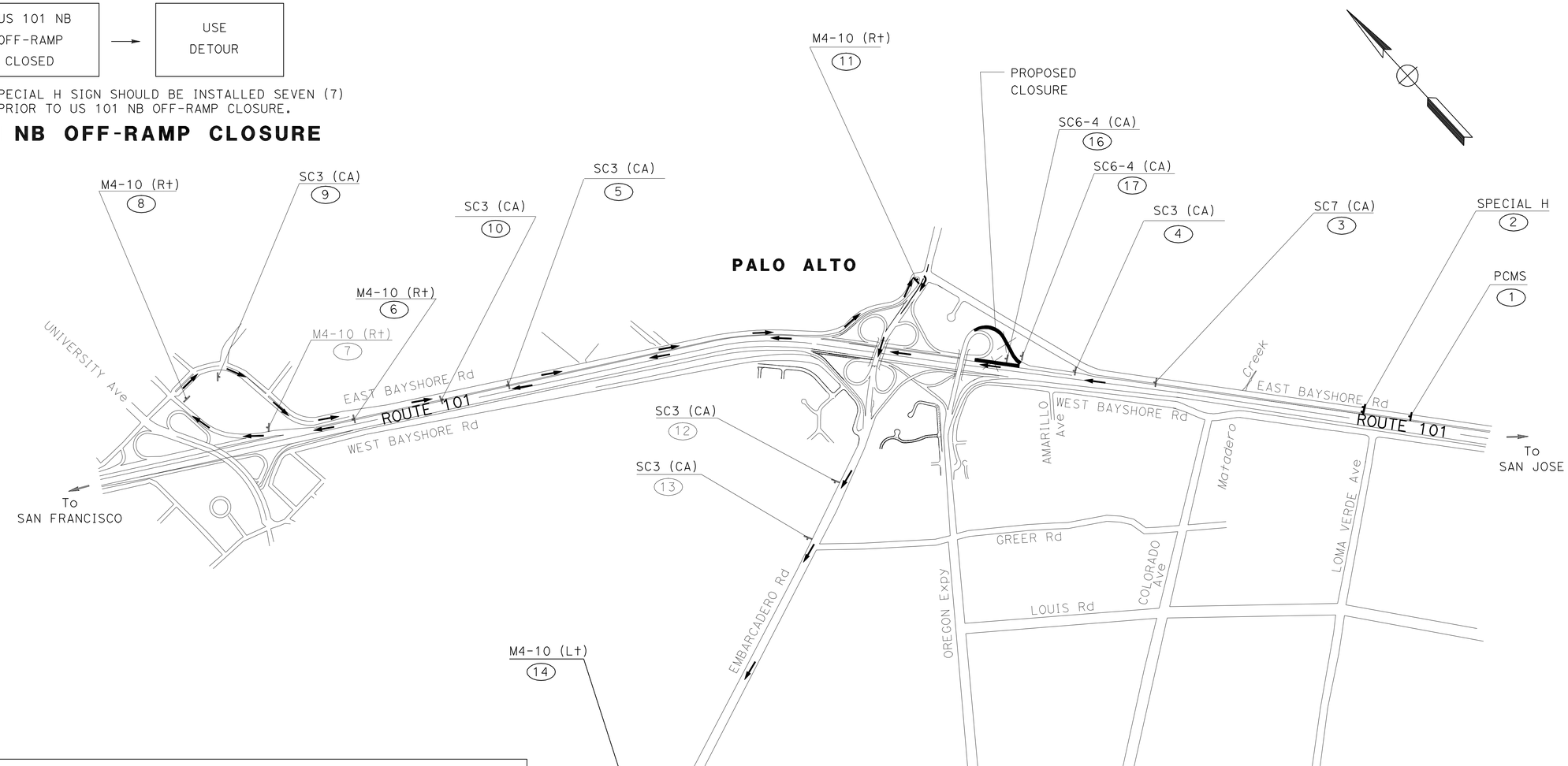

US 101 NB OFF-RAMP CLOSURE TO OREGON Expy/EMBARCADERO Rd

FOR NOTES AND LEGEND SEE SHEET CS-1	FOR SPECIAL SIGN DETAILS SEE SHEETS CS-23 THROUGH CS-27.

THIS PLAN ACCURATE FOR CONSTRUCTION AREA SIGN WORK ONLY

CONSTRUCTION AREA SIGNS

NO SCALE

CS-9

A C	05/11/11
REVISED BY	DATE REVISED
AILEEN CABICO	RUTA JARIWALA
CALCULATED-DESIGNED BY	CHECKED BY
CONSULTANT FUNCTIONAL SUPERVISOR	CHRISTOPHER LILLIE

STATE OF CALIFORNIA - DEPARTMENT OF TRANSPORTATION

Caltrans

LAST REVISION 05-11-11 DATE PLOTTED => 15-JUL-2011 TIME PLOTTED => 12:47

Dist	COUNTY	ROUTE	POST MILES TOTAL PROJECT	SHEET No.	TOTAL SHEETS
04	SCI	101	48.7/52.0	383	993

REGISTERED CIVIL ENGINEER 05/13/11 DATE

7-11-11
PLANS APPROVAL DATE

REGISTERED PROFESSIONAL ENGINEER
RUTA JARIWALA
No. C-73840
Exp. 6/30/11
CIVIL
STATE OF CALIFORNIA

THE STATE OF CALIFORNIA OR ITS OFFICERS OR AGENTS SHALL NOT BE RESPONSIBLE FOR THE ACCURACY OR COMPLETENESS OF SCANNED COPIES OF THIS PLAN SHEET.

URS Corporation
100 W San Fernando St
Suite 200
San Jose, CA 95113

Santa Clara Valley
Transportation Authority
3331 N First Street
San Jose, CA 95134

NOTES

1. THE PCMS SHOULD BE INSTALLED AND TURNED ON SEVEN (7) DAYS PRIOR TO US 101 SB ON-RAMP CLOSURE. THE PCMS MESSAGE SHOULD READ.....

US 101 SB ON-RAMP CLOSED ON	→	DATE & TIME

2. DURING US 101 SB ON-RAMP CLOSURE, THE PCMS MESSAGE SHOULD READ.....

US 101 SB ON-RAMP CLOSED	→	USE DETOUR

3. THE SPECIAL A SIGN SHOULD BE INSTALLED SEVEN (7) DAYS PRIOR TO US 101 SB ON-RAMP CLOSURE.

US 101 SB ON-RAMP CLOSURE

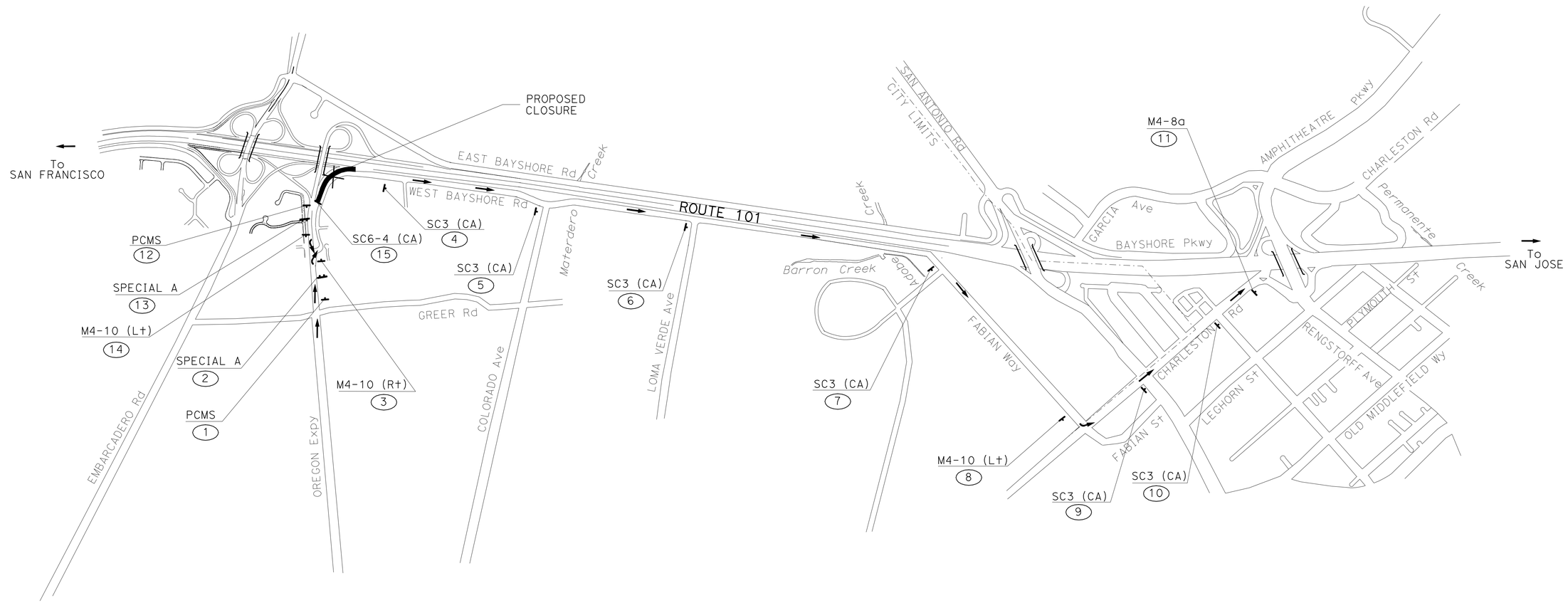

FOR NOTES AND LEGEND SEE SHEET CS-1	FOR SPECIAL SIGN DETAILS SEE SHEETS CS-23 THROUGH CS-27.

US 101 SB ON RAMP CLOSURE FROM OREGON Expy

THIS PLAN ACCURATE FOR CONSTRUCTION AREA SIGN WORK ONLY

CONSTRUCTION AREA SIGNS

NO SCALE

CS-10

A C	05/11/11
REVISED BY	DATE REVISED
AILEEN CABICO	RUTA JARIWALA
CALCULATED-DESIGNED BY	CHECKED BY
CONSULTANT FUNCTIONAL SUPERVISOR	CHRISTOPHER LILLIE

STATE OF CALIFORNIA - DEPARTMENT OF TRANSPORTATION
Caltrans

LAST REVISION 05-11-11 | DATE PLOTTED => 15-JUL-2011 | TIME PLOTTED => 12:47

Dist	COUNTY	ROUTE	POST MILES TOTAL PROJECT	SHEET No.	TOTAL SHEETS
04	SCI	101	48.7/52.0	384	993

REGISTERED CIVIL ENGINEER 05/13/11 DATE

7-11-11
PLANS APPROVAL DATE

REGISTERED PROFESSIONAL ENGINEER RUTA JARIWALA No. C-73840 Exp. 6/30/11 CIVIL STATE OF CALIFORNIA

THE STATE OF CALIFORNIA OR ITS OFFICERS OR AGENTS SHALL NOT BE RESPONSIBLE FOR THE ACCURACY OR COMPLETENESS OF SCANNED COPIES OF THIS PLAN SHEET.

URS Corporation
100 W San Fernando St
Suite 200
San Jose, CA 95113

Santa Clara Valley
Transportation Authority
3331 N First Street
San Jose, CA 95134

NOTES

1. THE PCMS SHOULD BE INSTALLED AND TURNED ON SEVEN (7) DAYS PRIOR TO US 101 SB ON-RAMP CLOSURE. THE PCMS MESSAGE SHOULD READ.....

US 101 SB ON-RAMP CLOSED ON	→	DATE & TIME

2. DURING US 101 SB ON-RAMP CLOSURE, THE PCMS MESSAGE SHOULD READ.....

US 101 SB ON-RAMP CLOSED	→	USE DETOUR

3. THE SPECIAL A SIGN SHOULD BE INSTALLED SEVEN (7) DAYS PRIOR TO US 101 SB ON-RAMP CLOSURE.

US 101 SB ON-RAMP CLOSURE

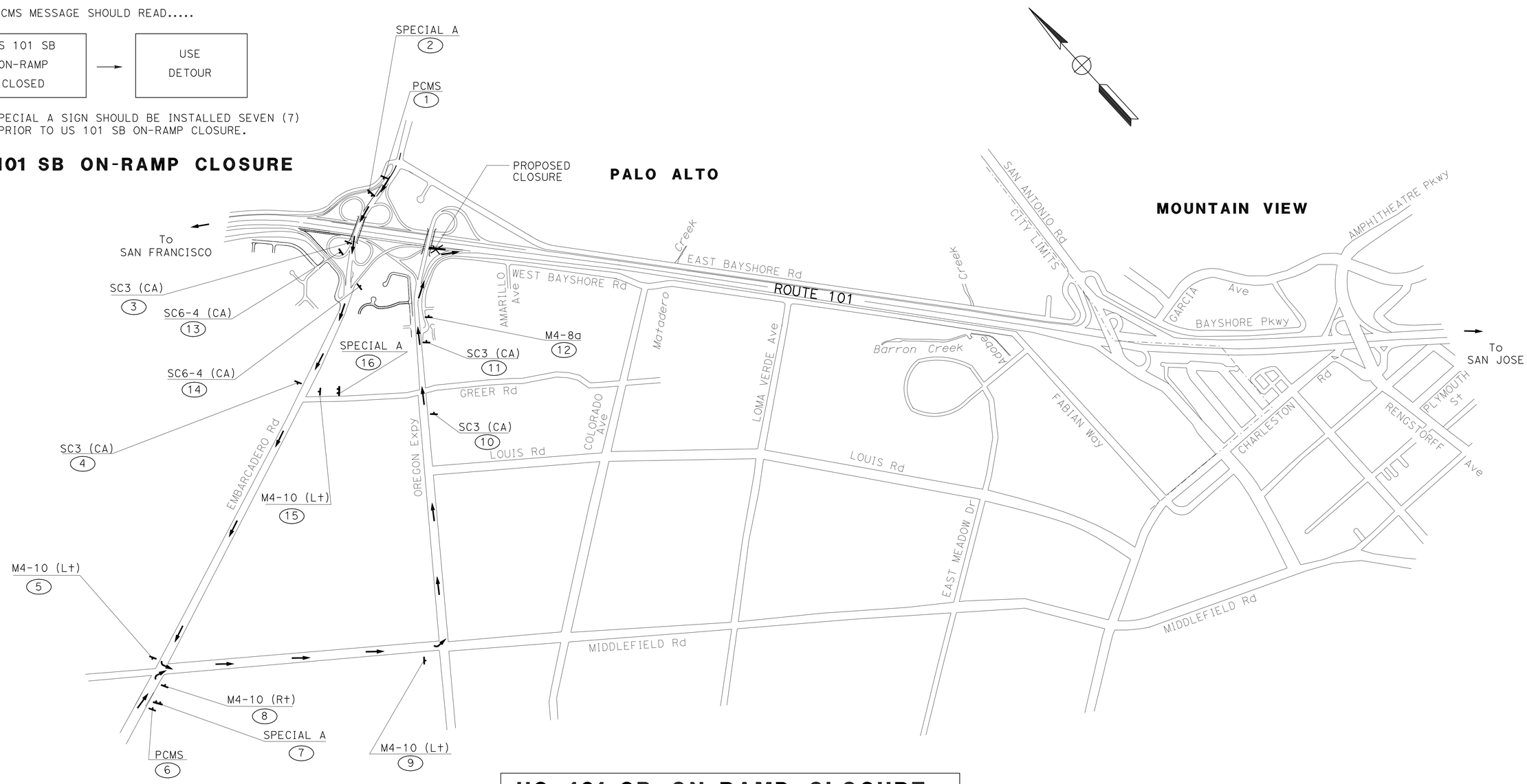

FOR NOTES AND LEGEND SEE SHEET CS-1	FOR SPECIAL SIGN DETAILS SEE SHEETS CS-23 THROUGH CS-27.

US 101 SB ON-RAMP CLOSURE FROM EMBARCADERO Rd

THIS PLAN ACCURATE FOR CONSTRUCTION AREA SIGN WORK ONLY

CONSTRUCTION AREA SIGNS

NO SCALE

CS-11

A C	05/11/11	AILEEN CABICO	RUTA JARIWALA
REVISED BY	DATE REVISED	CALCULATED-DESIGNED BY	CHECKED BY

CONSULTANT FUNCTIONAL SUPERVISOR: CHRISTOPHER LILLIE

STATE OF CALIFORNIA - DEPARTMENT OF TRANSPORTATION

Caltrans

LAST REVISION 05-11-11 | DATE PLOTTED => 15-JUL-2011 | TIME PLOTTED => 12:48

Dist	COUNTY	ROUTE	POST MILES TOTAL PROJECT	SHEET No.	TOTAL SHEETS
04	SCI	101	48.7/52.0	385	993

REGISTERED CIVIL ENGINEER 05/13/11 DATE

7-11-11
PLANS APPROVAL DATE

REGISTERED PROFESSIONAL ENGINEER RUTA JARIWALA No. C-73840 Exp. 6/30/11 CIVIL STATE OF CALIFORNIA

THE STATE OF CALIFORNIA OR ITS OFFICERS OR AGENTS SHALL NOT BE RESPONSIBLE FOR THE ACCURACY OR COMPLETENESS OF SCANNED COPIES OF THIS PLAN SHEET.

URS Corporation
100 W San Fernando St
Suite 200
San Jose, CA 95113

Santa Clara Valley
Transportation Authority
3331 N First Street
San Jose, CA 95134

NOTES

1. THE PCMS SHOULD BE INSTALLED AND TURNED ON SEVEN (7) DAYS PRIOR TO SB RENGSTORFF Ave OFF-RAMP CLOSURE. THE PCMS MESSAGE SHOULD READ.....

SB RENGSTORFF Ave OFF-RAMP CLOSED ON → DATE & TIME

2. DURING SB RENGSTORFF Ave OFF-RAMP CLOSURE, THE PCMS MESSAGE SHOULD READ.....

SB RENGSTORFF Ave OFF-RAMP CLOSED → USE DETOUR

3. THE SPECIAL K SIGN SHOULD BE INSTALLED SEVEN (7) DAYS PRIOR TO US 101 SB OFF-RAMP CLOSURE.

SB RENGSTORFF AVE OFF-RAMP CLOSURE

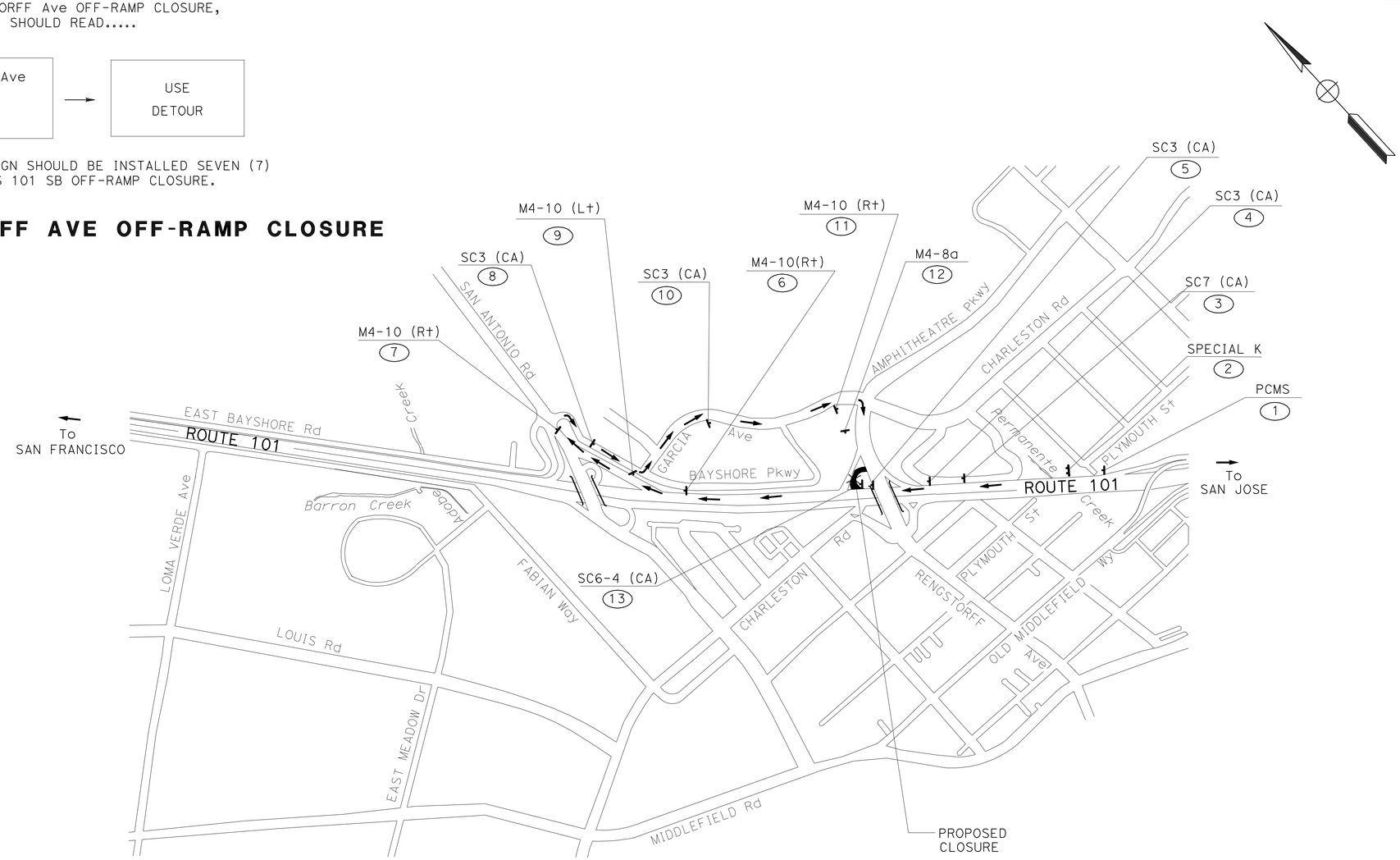

FOR NOTES AND LEGEND SEE SHEET CS-1	FOR SPECIAL SIGN DETAILS SEE SHEETS CS-23 THROUGH CS-27.

US 101 NB OFF-RAMP CLOSURE TO SB RENGSTORFF Ave

THIS PLAN ACCURATE FOR CONSTRUCTION AREA SIGN WORK ONLY

CONSTRUCTION AREA SIGNS
NO SCALE

CS-12

STATE OF CALIFORNIA - DEPARTMENT OF TRANSPORTATION
Caltrans

CONSULTANT FUNCTIONAL SUPERVISOR: CHRISTOPHER LILLIE
CALCULATED-DESIGNED BY: AILEEN CABICO
CHECKED BY: RUTA JARIWALA
REVISED BY: A C
DATE REVISED: 05/11/11

LAST REVISION 05-11-11 DATE PLOTTED => 15-JUL-2011 TIME PLOTTED => 12:48

Dist	COUNTY	ROUTE	POST MILES TOTAL PROJECT	SHEET No.	TOTAL SHEETS
04	SCI	101	48.7/52.0	386	993

REGISTERED CIVIL ENGINEER 05/13/11 DATE

7-11-11
PLANS APPROVAL DATE

REGISTERED PROFESSIONAL ENGINEER RUTA JARIWALA No. C-73840 Exp. 6/30/11 CIVIL STATE OF CALIFORNIA

THE STATE OF CALIFORNIA OR ITS OFFICERS OR AGENTS SHALL NOT BE RESPONSIBLE FOR THE ACCURACY OR COMPLETENESS OF SCANNED COPIES OF THIS PLAN SHEET.

URS Corporation
100 W San Fernando St
Suite 200
San Jose, CA 95113

Santa Clara Valley
Transportation Authority
3331 N First Street
San Jose, CA 95134

NOTES

1. THE PCMS SHOULD BE INSTALLED AND TURNED ON SEVEN (7) DAYS PRIOR TO US 101 NB ON-RAMP CLOSURE. THE PCMS MESSAGE SHOULD READ.....

US 101 NB ON-RAMP CLOSED ON	→	DATE & TIME

2. DURING US 101 NB ON-RAMP CLOSURE, THE PCMS MESSAGE SHOULD READ.....

US 101 NB ON-RAMP CLOSED	→	USE DETOUR

3. THE SPECIAL B SIGN SHOULD BE INSTALLED SEVEN (7) DAYS PRIOR TO US 101 NB ON-RAMP CLOSURE.

US 101 NB ON-RAMP CLOSURE

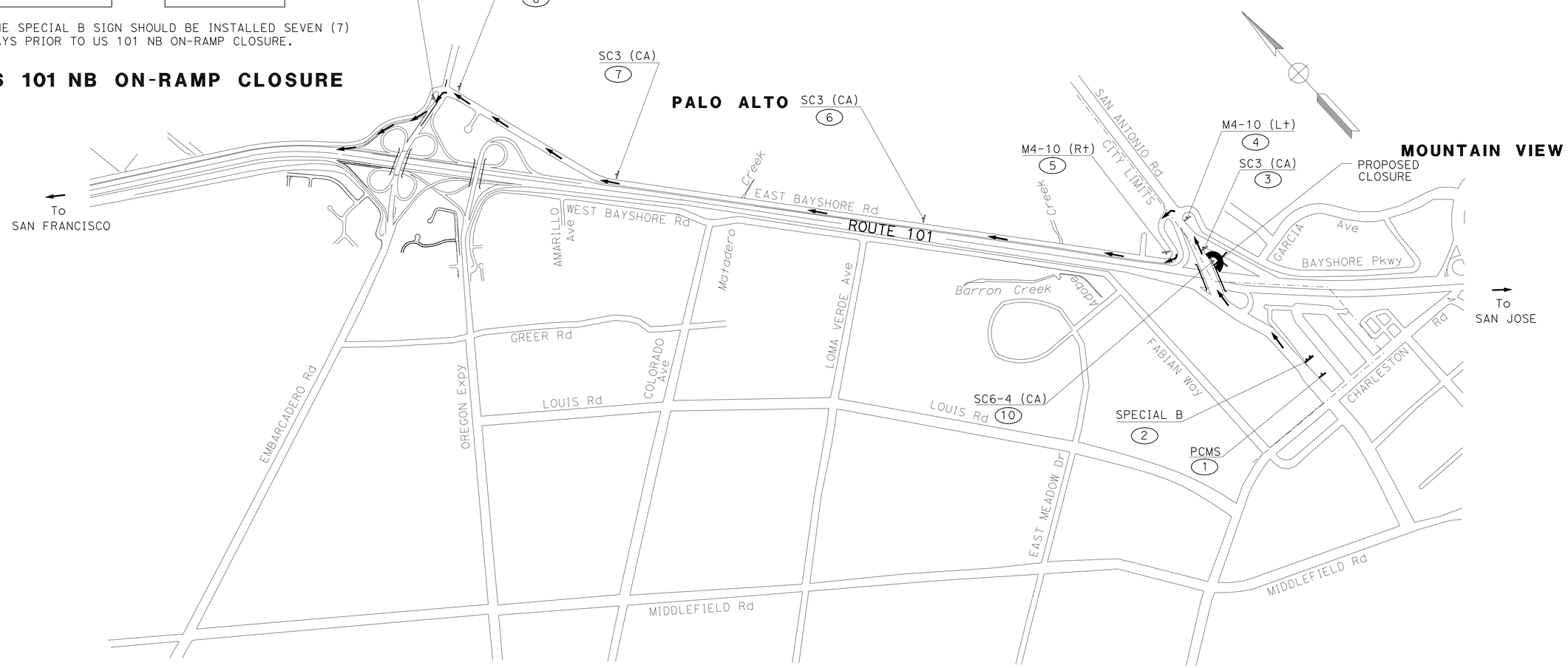

FOR NOTES AND LEGEND SEE SHEET CS-1	FOR SPECIAL SIGN DETAILS SEE SHEETS CS-23 THROUGH CS-27.

US 101 NB ON-RAMP CLOSURE FROM NB SAN ANTONIO Rd

THIS PLAN ACCURATE FOR CONSTRUCTION AREA SIGN WORK ONLY

CONSTRUCTION AREA SIGNS

NO SCALE

CS-13

REVISED BY	DATE REVISED
A C	05-11-11

AILEEN CABICO — RUTA JARIWALA — CALCULATED-DESIGNED BY — CHECKED BY

CONSULTANT FUNCTIONAL SUPERVISOR: CHRISTOPHER LILLIE

STATE OF CALIFORNIA - DEPARTMENT OF TRANSPORTATION

Caltrans

LAST REVISION 05-11-11 — DATE PLOTTED => 15-JUL-2011 — TIME PLOTTED => 12:48

Dist	COUNTY	ROUTE	POST MILES TOTAL PROJECT	SHEET No.	TOTAL SHEETS
04	SCI	101	48.7/52.0	387	993

REGISTERED CIVIL ENGINEER 05/13/11 DATE

7-11-11
PLANS APPROVAL DATE

REGISTERED PROFESSIONAL ENGINEER
RUTA JARIWALA
No. C-73840
Exp. 6/30/11
CIVIL
STATE OF CALIFORNIA

THE STATE OF CALIFORNIA OR ITS OFFICERS OR AGENTS SHALL NOT BE RESPONSIBLE FOR THE ACCURACY OR COMPLETENESS OF SCANNED COPIES OF THIS PLAN SHEET.

URS Corporation
100 W San Fernando St
Suite 200
San Jose, CA 95113

Santa Clara Valley
Transportation Authority
3331 N First Street
San Jose, CA 95134

NOTES

1. THE PCMS SHOULD BE INSTALLED AND TURNED ON SEVEN (7) DAYS PRIOR TO SB SAN ANTONIO Rd OFF-RAMP CLOSURE. THE PCMS MESSAGE SHOULD READ.....

SB SAN ANTONIO Rd OFF-RAMP CLOSED ON	→	DATE & TIME

2. DURING SB SAN ANTONIO Rd OFF-RAMP CLOSURE, THE PCMS MESSAGE SHOULD READ.....

SB SAN ANTONIO Rd OFF-RAMP CLOSED	→	USE DETOUR

3. THE SPECIAL M SIGN SHOULD BE INSTALLED SEVEN (7) DAYS PRIOR TO US 101 SB OFF-RAMP CLOSURE.

SB SAN ANTONIO Rd OFF-RAMP CLOSURE

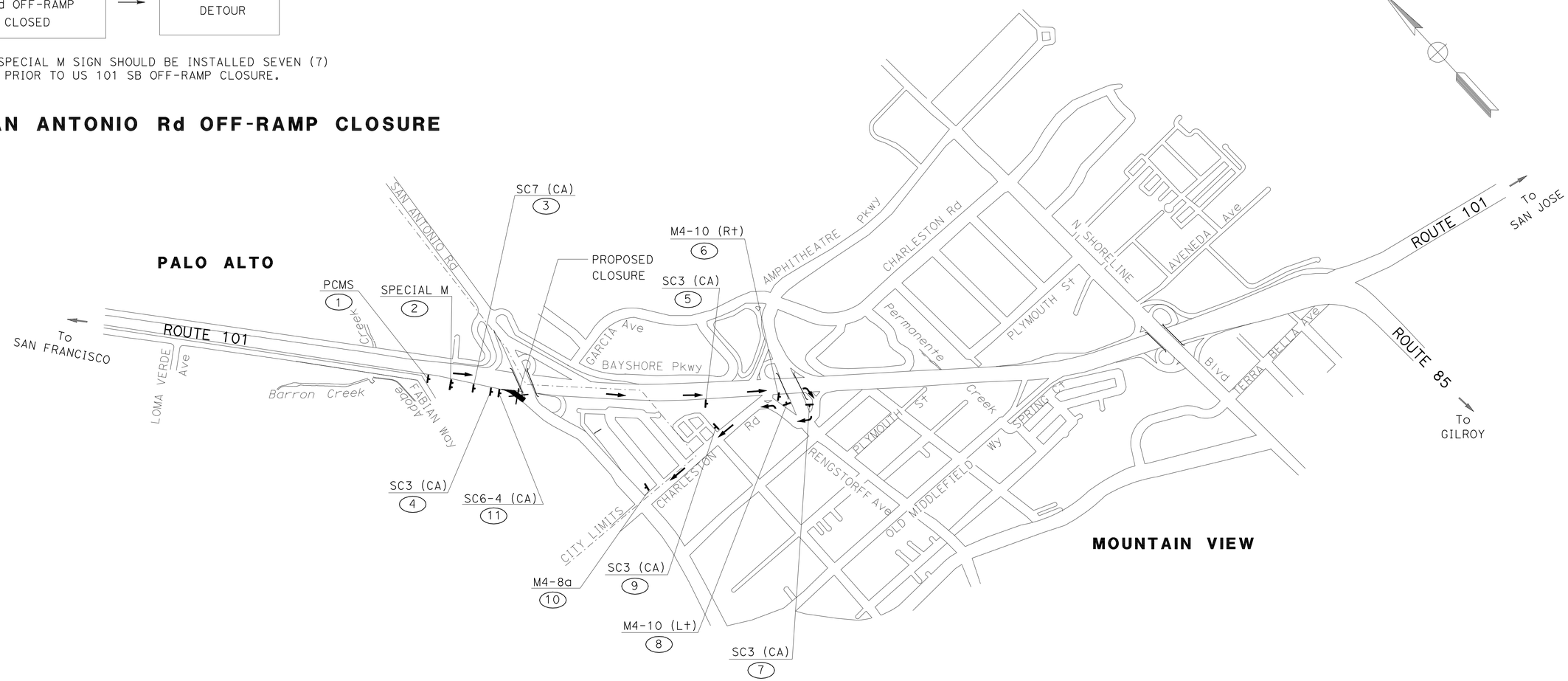

FOR NOTES AND LEGEND SEE SHEET CS-1	FOR SPECIAL SIGN DETAILS SEE SHEETS CS-23 THROUGH CS-27.

US 101 SB OFF-RAMP CLOSURE TO SB SAN ANTONIO Rd

THIS PLAN ACCURATE FOR CONSTRUCTION AREA SIGN WORK ONLY

CONSTRUCTION AREA SIGNS
NO SCALE

CS-14

REVISED BY	A C	AILEEN CABICO	CALCULATED-DESIGNED BY
DATE REVISED	05/11/11	RUTA JARIWALA	CHECKED BY

CONSULTANT FUNCTIONAL SUPERVISOR: CHRISTOPHER LILLIE

STATE OF CALIFORNIA - DEPARTMENT OF TRANSPORTATION
Caltrans

LAST REVISION 05-11-11 | DATE PLOTTED => 15-JUL-2011 | TIME PLOTTED => 12:48

Dist	COUNTY	ROUTE	POST MILES TOTAL PROJECT	SHEET No.	TOTAL SHEETS
04	SCI	101	48.7/52.0	388	993

REGISTERED CIVIL ENGINEER 05/13/11 DATE

7-11-11
PLANS APPROVAL DATE

REGISTERED PROFESSIONAL ENGINEER RUTA JARIWALA No. C-73840 Exp. 6/30/11 CIVIL STATE OF CALIFORNIA

THE STATE OF CALIFORNIA OR ITS OFFICERS OR AGENTS SHALL NOT BE RESPONSIBLE FOR THE ACCURACY OR COMPLETENESS OF SCANNED COPIES OF THIS PLAN SHEET.

URS Corporation
100 W San Fernando St
Suite 200
San Jose, CA 95113

Santa Clara Valley
Transportation Authority
3331 N First Street
San Jose, CA 95134

NOTES

1. THE PCMS SHOULD BE INSTALLED AND TURNED ON SEVEN (7) DAYS PRIOR TO SB OLD MIDDLEFILD WAY ON-RAMP CLOSURE. THE PCMS MESSAGE SHOULD READ.....

SB OLD MIDDLEFIELD WAY ON-RAMP CLOSED ON	→	DATE & TIME

2. DURING SB OLD MIDDLEFIELD WAY ON-RAMP CLOSURE, THE PCMS MESSAGE SHOULD READ.....

SB OLD MIDDLEFIELD WAY ON-RAMP CLOSED	→	USE DETOUR

3. THE SPECIAL N SIGN SHOULD BE INSTALLED SEVEN (7) DAYS PRIOR TO US 101 SB OFF-RAMP CLOSURE.

SB OLD MIDDLEFIELD WAY ON-RAMP CLOSURE

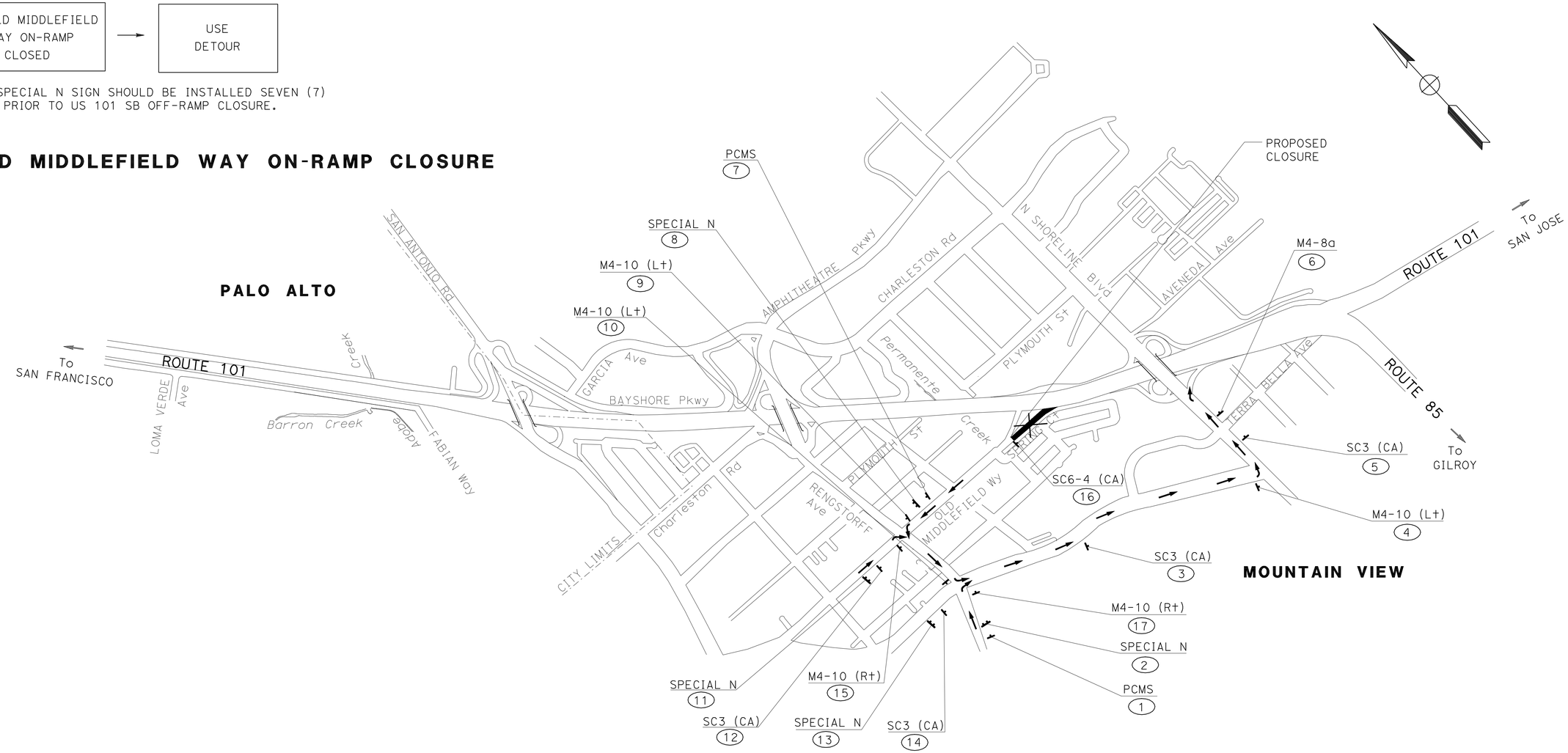

US 101 SB ON-RAMP CLOSURE FROM OLD MIDDLEFIELD WAY

FOR NOTES AND LEGEND SEE SHEET CS-1	FOR SPECIAL SIGN DETAILS SEE SHEETS CS-23 THROUGH CS-27.

THIS PLAN ACCURATE FOR CONSTRUCTION AREA SIGN WORK ONLY

CONSTRUCTION AREA SIGNS

NO SCALE

CS-15

REVISED BY	DATE REVISED
A C	05-11-11

AILEEN CABICO — RUTA JARIWALA

CALCULATED-DESIGNED BY — CHECKED BY

CONSULTANT FUNCTIONAL SUPERVISOR: CHRISTOPHER LILLIE

STATE OF CALIFORNIA - DEPARTMENT OF TRANSPORTATION

Caltrans

LAST REVISION 05-11-11 | DATE PLOTTED => 15-JUL-2011 | TIME PLOTTED => 12:48

Dist	COUNTY	ROUTE	POST MILES TOTAL PROJECT	SHEET No.	TOTAL SHEETS
04	SCI	101	48.7/52.0	389	993

REGISTERED CIVIL ENGINEER 05/13/11 DATE

7-11-11
PLANS APPROVAL DATE

REGISTERED PROFESSIONAL ENGINEER
RUTA JARIWALA
No. C-73840
Exp. 6/30/11
CIVIL
STATE OF CALIFORNIA

THE STATE OF CALIFORNIA OR ITS OFFICERS OR AGENTS SHALL NOT BE RESPONSIBLE FOR THE ACCURACY OR COMPLETENESS OF SCANNED COPIES OF THIS PLAN SHEET.

URS Corporation
100 W San Fernando St
Suite 200
San Jose, CA 95113

Santa Clara Valley
Transportation Authority
3331 N First Street
San Jose, CA 95134

NOTES

1. THE PCMS SHOULD BE INSTALLED AND TURNED ON SEVEN (7) DAYS PRIOR TO SB CHARLESTON Rd ON-RAMP CLOSURE. THE PCMS MESSAGE SHOULD READ.....

SB CHARLESTON Rd ON-RAMP CLOSED ON	→	DATE & TIME

2. DURING SB CHARLESTON Rd ON-RAMP CLOSURE, THE PCMS MESSAGE SHOULD READ.....

SB CHARLESTON Rd ON-RAMP CLOSED	→	USE DETOUR

3. THE SPECIAL O SIGN SHOULD BE INSTALLED SEVEN (7) DAYS PRIOR TO US 101 SB ON-RAMP CLOSURE.

SB CHARLESTON Rd ON-RAMP CLOSURE

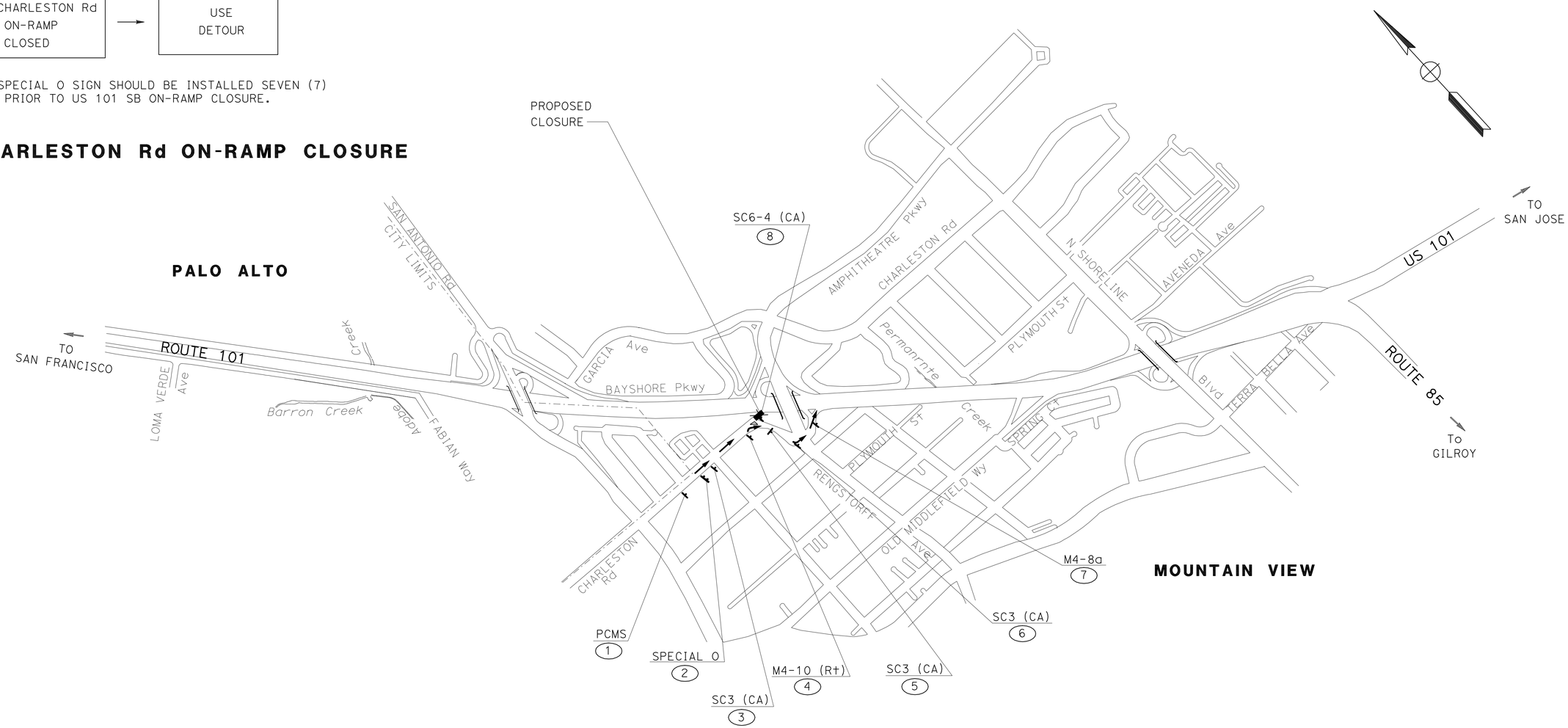

FOR NOTES AND LEGEND SEE SHEET CS-1	FOR SPECIAL SIGN DETAILS SEE SHEETS CS-23 THROUGH CS-27.

US 101 SB ON RAMP CLOSURE FROM CHARLESTON Rd

THIS PLAN ACCURATE FOR CONSTRUCTION AREA SIGN WORK ONLY

CONSTRUCTION AREA SIGNS

NO SCALE

CS-16

STATE OF CALIFORNIA - DEPARTMENT OF TRANSPORTATION
Caltrans

CONSULTANT FUNCTIONAL SUPERVISOR: CHRISTOPHER LILLIE
CALCULATED-DESIGNED BY: AILEEN CABICO
CHECKED BY: RUTA JARIWALA
REVISED BY: A C
DATE REVISED: 05/11/11

LAST REVISION 05-11-11
DATE PLOTTED => 15-JUL-2011
TIME PLOTTED => 12:48

Dist	COUNTY	ROUTE	POST MILES TOTAL PROJECT	SHEET No.	TOTAL SHEETS
04	SCI	101	48.7/52.0	390	993

REGISTERED CIVIL ENGINEER 05/13/11 DATE

7-11-11
PLANS APPROVAL DATE

REGISTERED PROFESSIONAL ENGINEER
RUTA JARIWALA
No. C-73840
Exp. 6/30/11
CIVIL
STATE OF CALIFORNIA

THE STATE OF CALIFORNIA OR ITS OFFICERS OR AGENTS SHALL NOT BE RESPONSIBLE FOR THE ACCURACY OR COMPLETENESS OF SCANNED COPIES OF THIS PLAN SHEET.

URS Corporation
100 W San Fernando St
Suite 200
San Jose, CA 95113

Santa Clara Valley
Transportation Authority
3331 N First Street
San Jose, CA 95134

NOTES

1. THE PCMS SHOULD BE INSTALLED AND TURNED ON SEVEN (7) DAYS PRIOR TO SHORELINE Blvd OFF-RAMP CLOSURE. THE PCMS MESSAGE SHOULD READ.....

SHORELINE Blvd OFF-RAMP CLOSED ON	→	DATE & TIME

2. DURING SHORELINE Blvd OFF-RAMP CLOSURE, THE PCMS MESSAGE SHOULD READ.....

SHORELINE Blvd OFF-RAMP CLOSED	→	USE DETOUR

3. THE SPECIAL P SIGN SHOULD BE INSTALLED SEVEN (7) DAYS PRIOR TO US 101 SB OFF-RAMP CLOSURE.

SHORELINE Blvd OFF-RAMP CLOSURE

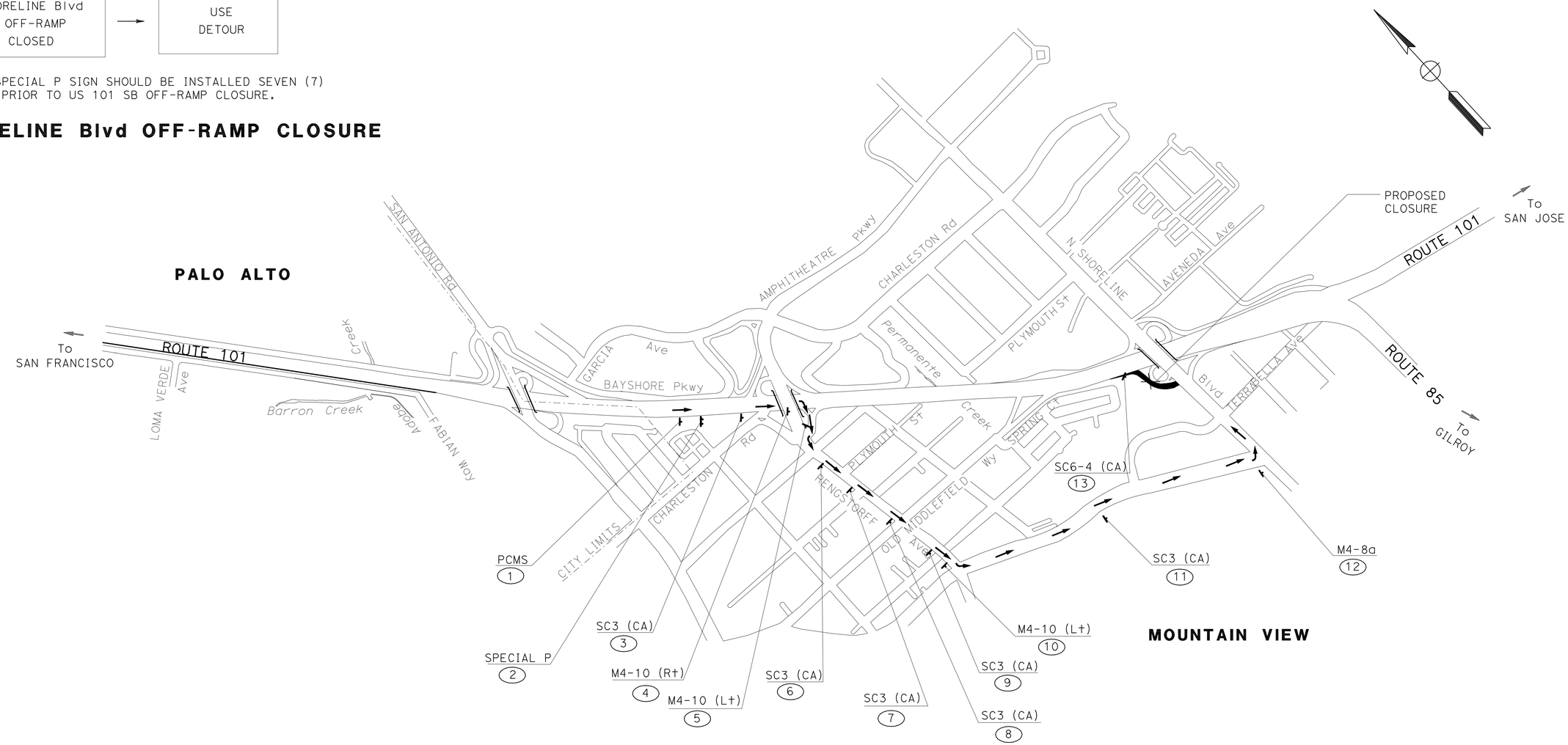

US 101 SB OFF-RAMP CLOSURE TO SHORELINE Blvd

FOR NOTES AND LEGEND SEE SHEET CS-1	FOR SPECIAL SIGN DETAILS SEE SHEETS CS-23 THROUGH CS-27.

THIS PLAN ACCURATE FOR CONSTRUCTION AREA SIGN WORK ONLY

CONSTRUCTION AREA SIGNS
NO SCALE

CS-17

A C	05/11/11
REVISED BY	DATE REVISED
AILEEN CABICO	RUTA JARIWALA
CALCULATED-DESIGNED BY	CHECKED BY
CONSULTANT FUNCTIONAL SUPERVISOR	CHRISTOPHER LILLIE

STATE OF CALIFORNIA - DEPARTMENT OF TRANSPORTATION
Caltrans

LAST REVISION 05-11-11 | DATE PLOTTED => 15-JUL-2011 | TIME PLOTTED => 12:48

Dist	COUNTY	ROUTE	POST MILES TOTAL PROJECT	SHEET No.	TOTAL SHEETS
04	SCI	101	48.7/52.0	391	993

REGISTERED CIVIL ENGINEER 05/13/11 DATE

7-11-11
PLANS APPROVAL DATE

REGISTERED PROFESSIONAL ENGINEER RUTA JARIWALA No. C-73840 Exp. 6/30/11 CIVIL STATE OF CALIFORNIA

THE STATE OF CALIFORNIA OR ITS OFFICERS OR AGENTS SHALL NOT BE RESPONSIBLE FOR THE ACCURACY OR COMPLETENESS OF SCANNED COPIES OF THIS PLAN SHEET.

URS Corporation
100 W San Fernando St
Suite 200
San Jose, CA 95113

Santa Clara Valley
Transportation Authority
3331 N First Street
San Jose, CA 95134

NOTES

1. THE PCMS SHOULD BE INSTALLED AND TURNED ON SEVEN (7) DAYS PRIOR TO US 101 NB OFF-RAMP CLOSURE. THE PCMS MESSAGE SHOULD READ.....

US 101 NB OFF-RAMP CLOSED ON	→	DATE & TIME

2. DURING US 101 NB OFF-RAMP CLOSURE, THE PCMS MESSAGE SHOULD READ.....

US 101 NB OFF-RAMP CLOSED	→	USE DETOUR

3. THE SPECIAL H SIGN SHOULD BE INSTALLED SEVEN (7) DAYS PRIOR TO US 101 SB OFF-RAMP CLOSURE.

US 101 NB OFF-RAMP CLOSURE

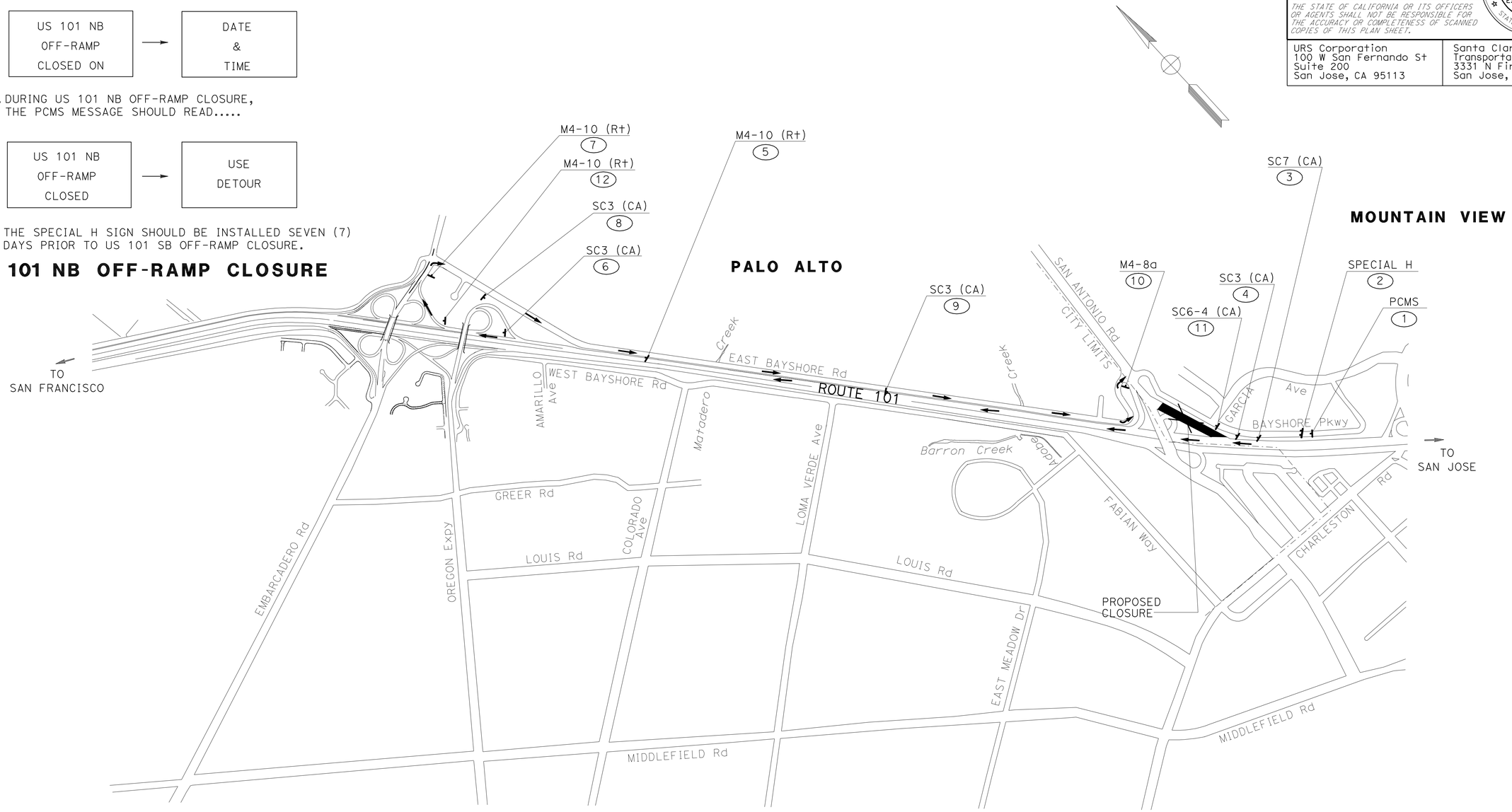

FOR NOTES AND LEGEND SEE SHEET CS-1	FOR SPECIAL SIGN DETAILS SEE SHEETS CS-23 THROUGH CS-27.

US 101 NB OFF-RAMP CLOSURE TO SAN ANTONIO Rd

THIS PLAN ACCURATE FOR CONSTRUCTION AREA SIGN WORK ONLY

CONSTRUCTION AREA SIGNS

NO SCALE

CS-18

STATE OF CALIFORNIA - DEPARTMENT OF TRANSPORTATION
Caltrans

CONSULTANT FUNCTIONAL SUPERVISOR: CHRISTOPHER LILLIE
CALCULATED-DESIGNED BY: AILEEN CABICO
CHECKED BY: RUTA JARIWALA
REVISED BY: A C
DATE REVISED: 05/11/11

LAST REVISION 05-11-11
DATE PLOTTED => 15-JUL-2011
TIME PLOTTED => 12:48

Dist	COUNTY	ROUTE	POST MILES TOTAL PROJECT	SHEET No.	TOTAL SHEETS
04	SCI	101	48.7/52.0	392	993

REGISTERED CIVIL ENGINEER 05/13/11 DATE

7-11-11
PLANS APPROVAL DATE

REGISTERED PROFESSIONAL ENGINEER
RUTA JARIWALA
No. C-73840
Exp. 6/30/11
CIVIL
STATE OF CALIFORNIA

THE STATE OF CALIFORNIA OR ITS OFFICERS OR AGENTS SHALL NOT BE RESPONSIBLE FOR THE ACCURACY OR COMPLETENESS OF SCANNED COPIES OF THIS PLAN SHEET.

URS Corporation
100 W San Fernando St
Suite 200
San Jose, CA 95113

Santa Clara Valley
Transportation Authority
3331 N First Street
San Jose, CA 95134

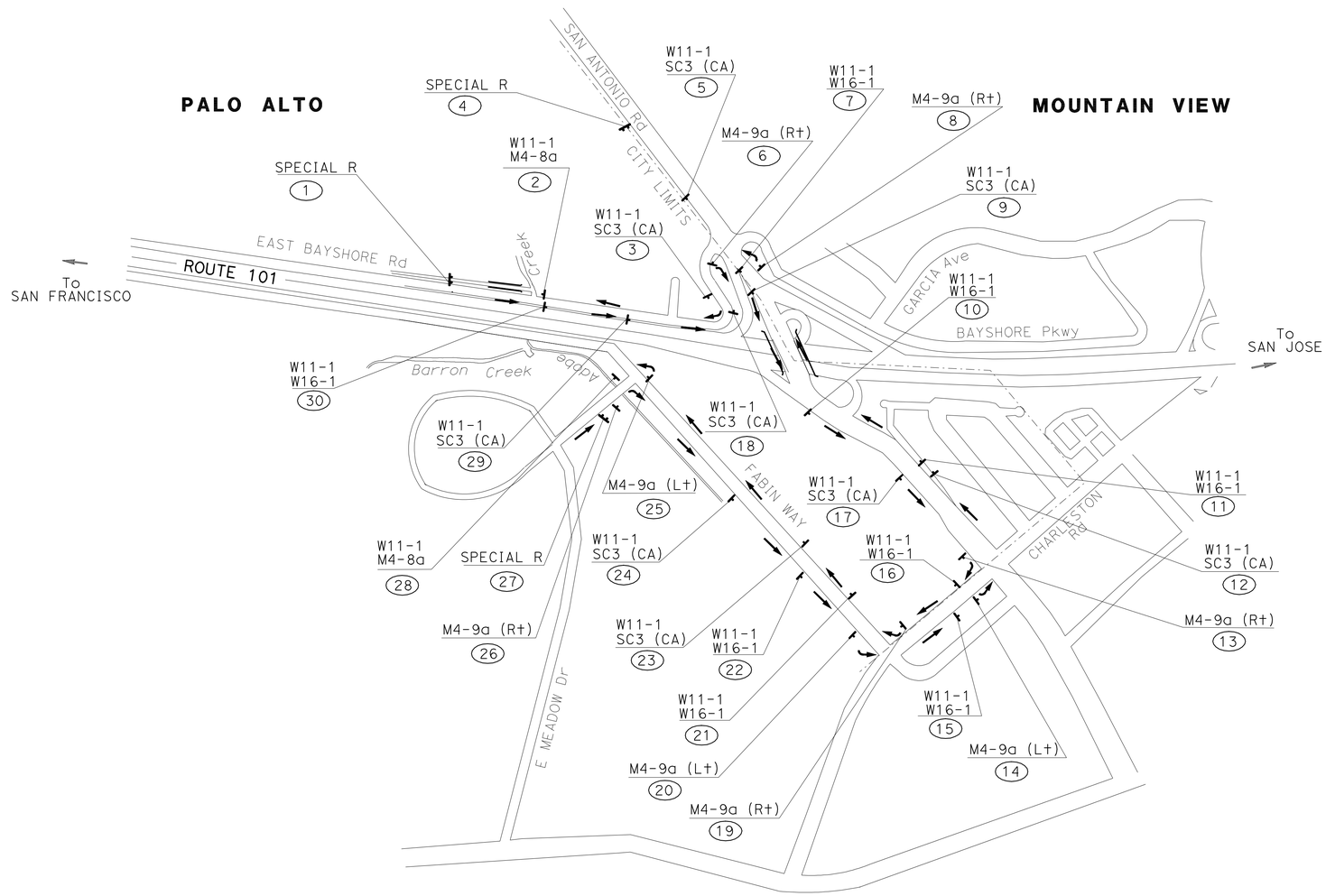

ADOBE CREEK CLOSURE
US 101 UNDERCROSSING

FOR NOTES AND LEGEND SEE SHEET CS-1	FOR SPECIAL SIGN DETAILS SEE SHEETS CS-23 THROUGH CS-27.

THIS PLAN ACCURATE FOR CONSTRUCTION AREA SIGN WORK ONLY

CONSTRUCTION AREA SIGNS
NO SCALE

CS-19

STATE OF CALIFORNIA - DEPARTMENT OF TRANSPORTATION
Caltrans

CONSULTANT FUNCTIONAL SUPERVISOR: CHRISTOPHER LILLIE
CALCULATED-DESIGNED BY: AILEEN CABICO
CHECKED BY: RUTA JARIWALA
REVISED BY: A C
DATE REVISED: 05/11/11

LAST REVISION 05-11-11
DATE PLOTTED => 15-JUL-2011
TIME PLOTTED => 12:49

Dist	COUNTY	ROUTE	POST MILES TOTAL PROJECT	SHEET No.	TOTAL SHEETS
04	SCI	101	48.7/52.0	393	993

REGISTERED CIVIL ENGINEER 05/13/11 DATE

7-11-11
PLANS APPROVAL DATE

REGISTERED PROFESSIONAL ENGINEER RUTA JARIWALA No. C-73840 Exp. 6/30/11 CIVIL STATE OF CALIFORNIA

THE STATE OF CALIFORNIA OR ITS OFFICERS OR AGENTS SHALL NOT BE RESPONSIBLE FOR THE ACCURACY OR COMPLETENESS OF SCANNED COPIES OF THIS PLAN SHEET.

URS Corporation
100 W San Fernando St
Suite 200
San Jose, CA 95113

Santa Clara Valley
Transportation Authority
3331 N First Street
San Jose, CA 95134

NOTES

1. THE PCMS SHOULD BE INSTALLED AND TURNED ON SEVEN (7) DAYS PRIOR TO US 101 SB ON-RAMP CLOSURE. THE PCMS MESSAGE SHOULD READ.....

US 101 SB ON-RAMP CLOSED ON	→	DATE & TIME

2. DURING US 101 SB ON-RAMP CLOSURE, THE PCMS MESSAGE SHOULD READ.....

US 101 SB ON-RAMP CLOSED	→	USE DETOUR

3. THE SPECIAL A SIGN SHOULD BE INSTALLED SEVEN (7) DAYS PRIOR TO US 101 SB ON-RAMP CLOSURE.

US 101 SB ON-RAMP CLOSURE

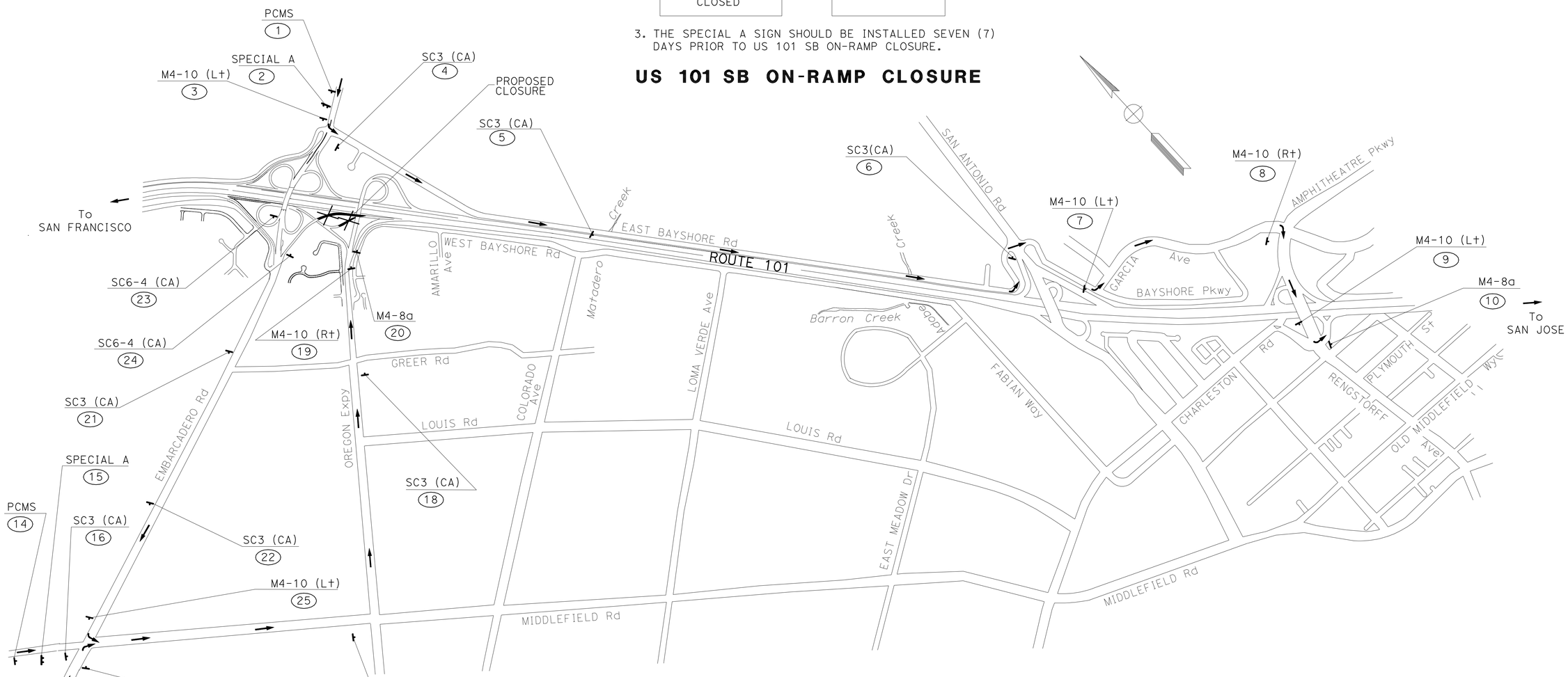

FOR NOTES AND/OR LEGEND SEE SHEET CS-1	FOR SPECIAL SIGN DETAILS SEE SHEETS CS-23 THROUGH CS-27.

US 101 SB LONG TERM ON-RAMP CLOSURE FROM EMBARCADERO Rd

CONSTRUCTION AREA SIGNS

NO SCALE

CS-20

STATE OF CALIFORNIA - DEPARTMENT OF TRANSPORTATION
Caltrans

CONSULTANT FUNCTIONAL SUPERVISOR: CHRISTOPHER LILLIE

CALCULATED-DESIGNED BY: AILEEN CABICO
CHECKED BY: RUTA JARIWALA

REVISED BY: A C
DATE REVISED: 05/11/11

LAST REVISION 05-11-11
DATE PLOTTED => 15-JUL-2011
TIME PLOTTED => 12:49

Dist	COUNTY	ROUTE	POST MILES TOTAL PROJECT	SHEET No.	TOTAL SHEETS
04	SCI	101	48.7/52.0	394	993

REGISTERED CIVIL ENGINEER 01/31/11 DATE

7-11-11
PLANS APPROVAL DATE

REGISTERED PROFESSIONAL ENGINEER
RUTA JARIWALA
No. C-73840
Exp. 6/30/11
CIVIL
STATE OF CALIFORNIA

THE STATE OF CALIFORNIA OR ITS OFFICERS OR AGENTS SHALL NOT BE RESPONSIBLE FOR THE ACCURACY OR COMPLETENESS OF SCANNED COPIES OF THIS PLAN SHEET.

URS Corporation
100 W San Fernando St
Suite 200
San Jose, CA 95113

Santa Clara Valley
Transportation Authority
3331 N First Street
San Jose, CA 95134

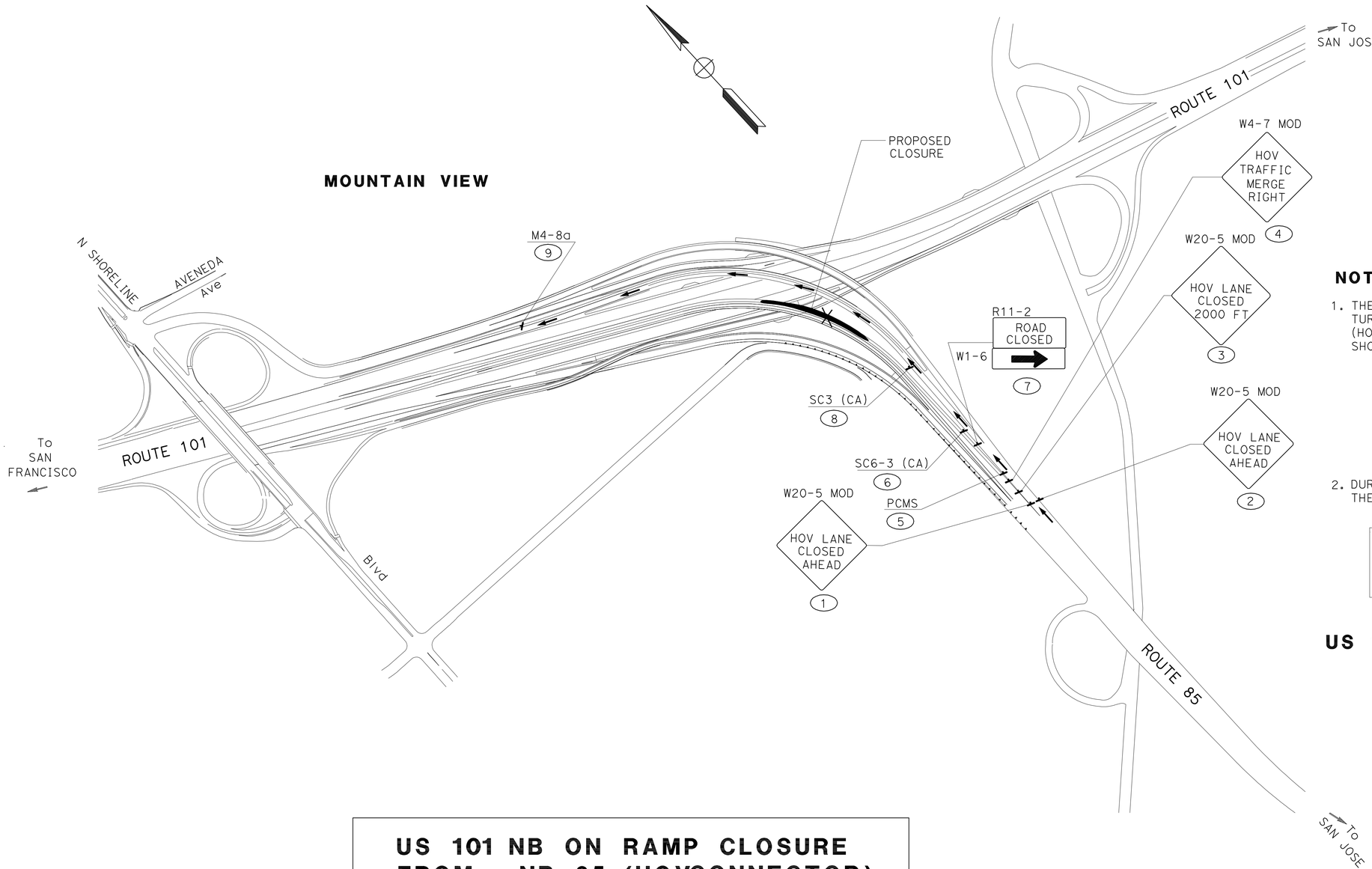

NOTES

1. THE PCMS SHOULD BE INSTALLED AND TURNED ON PRIOR TO US 101 NB ON-RAMP (HOV CONNECTOR) CLOSURE.THE PCMS MESSAGE SHOULD READ.....

HOV LANE CLOSED ON → DATE & TIME

2. DURING US 101 NB ON-RAMP (HOV CONNECTOR) CLOSURE, THE PCMS MESSAGE SHOULD READ.....

HOV LANE CLOSED → USE DETOUR

US 101 NB ON-RAMP CLOSURE (HOV CONNECTOR)

US 101 NB ON RAMP CLOSURE FROM NB 85 (HOVCONNECTOR)

CONSTRUCTION AREA SIGNS

NO SCALE

CS-21

THIS PLAN ACCURATE FOR CONSTRUCTION AREA SIGN WORK ONLY

STATE OF CALIFORNIA - DEPARTMENT OF TRANSPORTATION
Caltrans

CONSULTANT FUNCTIONAL SUPERVISOR: CHRISTOPHER LILLIE
CALCULATED-DESIGNED BY: AILEEN CABICO
CHECKED BY: RUTA JARIWALA
REVISED BY: A C
DATE REVISED: 01/24/11

LAST REVISION DATE PLOTTED => 15-JUL-2011
01-24-11 TIME PLOTTED => 12:49

Dist	COUNTY	ROUTE	POST MILES TOTAL PROJECT	SHEET No.	TOTAL SHEETS
04	SCI	101	48.7/52.0	395	993

REGISTERED CIVIL ENGINEER 05/13/11 DATE

7-11-11
PLANS APPROVAL DATE

REGISTERED PROFESSIONAL ENGINEER RUTA JARIWALA No. C-73840 Exp. 6/30/11 CIVIL STATE OF CALIFORNIA

THE STATE OF CALIFORNIA OR ITS OFFICERS OR AGENTS SHALL NOT BE RESPONSIBLE FOR THE ACCURACY OR COMPLETENESS OF SCANNED COPIES OF THIS PLAN SHEET.

URS Corporation
100 W San Fernando St
Suite 200
San Jose, CA 95113

Santa Clara Valley
Transportation Authority
3331 N First Street
San Jose, CA 95134

NOTES

1. THE PCMS SHOULD BE INSTALLED AND TURNED ON SEVEN (7) DAYS PRIOR TO OLD MIDDLEFIELD Way OFF-RAMP CLOSURE. THE PCMS MESSAGE SHOULD READ.....

OLD MIDDLEFIELD Way OFF-RAMP CLOSED ON	→	DATE & TIME

2. DURING US 101 SB ON-RAMP CLOSURE, THE PCMS MESSAGE SHOULD READ.....

OLD MIDDLEFIELD Way OFF-RAMP CLOSED	→	USE DETOUR

3. THE SPECIAL T SIGN SHOULD BE INSTALLED SEVEN (7) DAYS PRIOR TO OLD MIDDLEFIELD Way OFF-RAMP CLOSURE.

OLD MIDDLEFIELD WAY OFF-RAMP CLOSURE

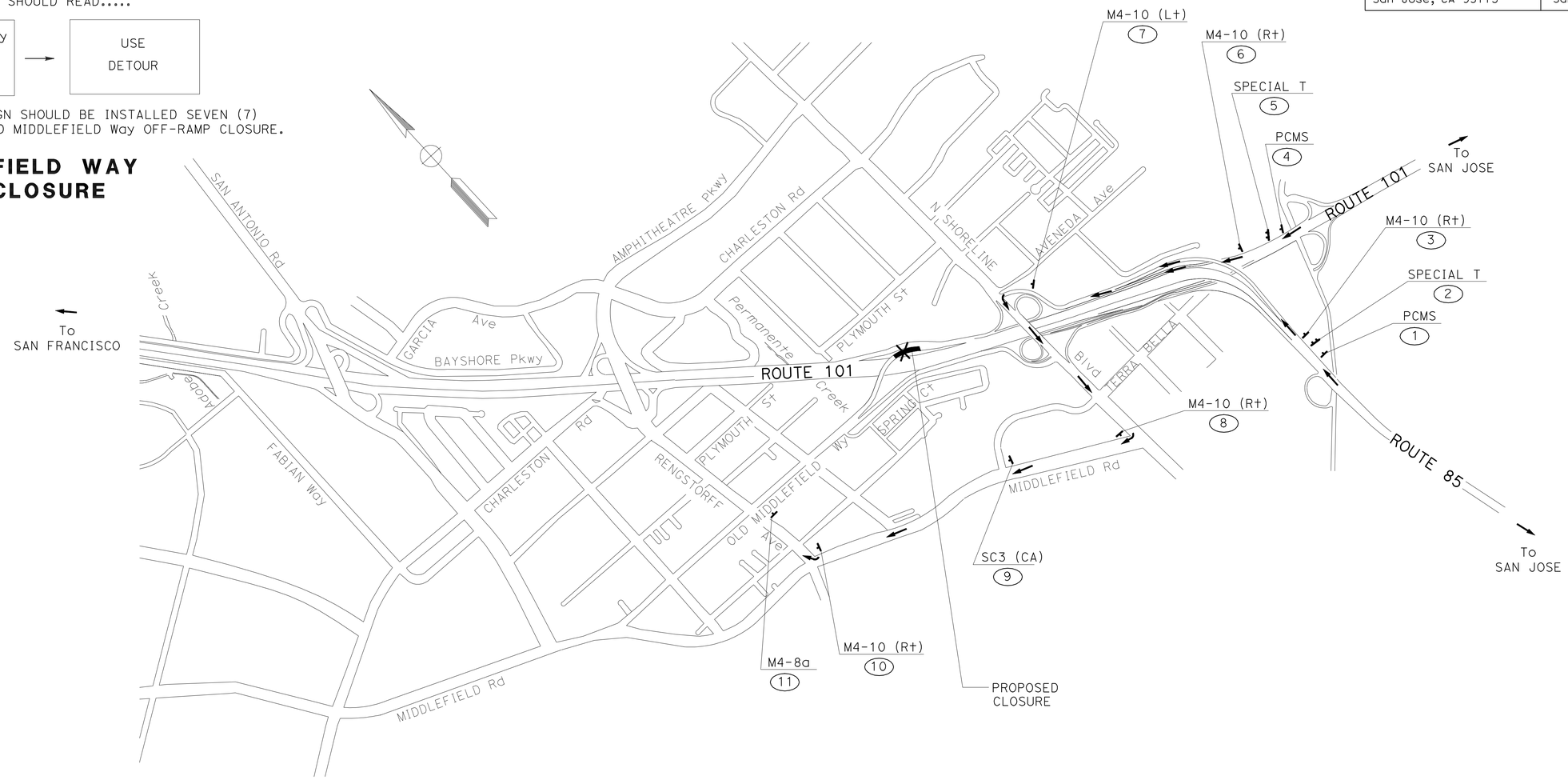

DETOUR DURING IMPLEMENTING LANESEPARATION SYSTEM (OLD MIDDLEFIELD WAY OFF-RAMP) STA 204+64.34 TO 212+99.58

FOR NOTES AND/OR LEGEND SEE SHEET CS-1	FOR SPECIAL SIGN DETAILS SEE SHEETS CS-23 THROUGH CS-27.

CONSTRUCTION AREA SIGNS

NO SCALE

CS-22

THIS PLAN ACCURATE FOR CONSTRUCTION AREA SIGN WORK ONLY

REVISED BY	A C
DATE REVISED	05/11/11
CALCULATED-DESIGNED BY	AILEEN CABICO
CHECKED BY	RUTA JARIWALA
CONSULTANT FUNCTIONAL SUPERVISOR	CHRISTOPHER LILLIE

STATE OF CALIFORNIA - DEPARTMENT OF TRANSPORTATION

Caltrans

LAST REVISION DATE PLOTTED => 15-JUL-2011
05-11-11 TIME PLOTTED => 12:49

Dist	COUNTY	ROUTE	POST MILES TOTAL PROJECT	SHEET No.	TOTAL SHEETS
04	SCI	101	48.7/52.0	396	993

REGISTERED CIVIL ENGINEER 01/31/11 DATE

7-11-11
PLANS APPROVAL DATE

REGISTERED PROFESSIONAL ENGINEER RUTA JARIWALA No. C-73840 Exp. 6/30/11 CIVIL STATE OF CALIFORNIA

THE STATE OF CALIFORNIA OR ITS OFFICERS OR AGENTS SHALL NOT BE RESPONSIBLE FOR THE ACCURACY OR COMPLETENESS OF SCANNED COPIES OF THIS PLAN SHEET.

URS Corporation
100 W San Fernando St
Suite 200
San Jose, CA 95113

Santa Clara Valley
Transportation Authority
3331 N First Street
San Jose, CA 95134

NOTE: FOR ALL SIGN PANELS, BACKGROUND IS ORANGE COLOR AND LEGEND IS BLACK

72" × 72"

US 101 SB
ON-RAMP
CLOSED ON

DATE
TIME

6" CAP CALTRANS SERIES E
6" CAP CALTRANS SERIES E
6" CAP CALTRANS SERIES E
5" CAP CALTRANS SERIES E (42" X 24")

72" × 72"

US 101 SB
ON-RAMP
CLOSED

USE
DETOUR

6" CAP CALTRANS SERIES E
6" CAP CALTRANS SERIES E
6" CAP CALTRANS SERIES E
5" CAP CALTRANS SERIES E (42" X 24")

SPECIAL (A)

INSTALL SIGN 7 DAYS
PRIOR TO US 101 SB
ON-RAMP CLOSURE

72" × 72"

US 101 NB
ON-RAMP
CLOSED ON

DATE
TIME

6" CAP CALTRANS SERIES E
6" CAP CALTRANS SERIES E
6" CAP CALTRANS SERIES E
5" CAP CALTRANS SERIES E (42" X 24")

72" × 72"

US 101 NB
ON-RAMP
CLOSED

USE
DETOUR

6" CAP CALTRANS SERIES E
6" CAP CALTRANS SERIES E
6" CAP CALTRANS SERIES E
5" CAP CALTRANS SERIES E (42" X 24")

SPECIAL (B)

INSTALL SIGN 7 DAYS
PRIOR TO US 101 NB
ON-RAMP CLOSURE

72" × 72"

NB AMPHITHEATER
Pkwy OFF-RAMP
CLOSED ON

DATE
TIME

6" CAP CALTRANS SERIES E
6" CAP CALTRANS SERIES E
6" CAP CALTRANS SERIES E
5" CAP CALTRANS SERIES E (42" X 24")

72" × 72"

NB AMPHITHEATER
Pkwy OFF-RAMP
CLOSED

USE
DETOUR

6" CAP CALTRANS SERIES E
6" CAP CALTRANS SERIES E
6" CAP CALTRANS SERIES E
5" CAP CALTRANS SERIES E (42" X 24")

SPECIAL (C)

INSTALL SIGN 7 DAYS
PRIOR TO NB AMPHITHEATER Pkwy
OFF-RAMP CLOSURE

72" × 72"

NB SAN ANTONIO Rd
OFF-RAMP
CLOSED ON

DATE
TIME

6" CAP CALTRANS SERIES E
6" CAP CALTRANS SERIES E
6" CAP CALTRANS SERIES E
5" CAP CALTRANS SERIES E (42" X 24")

72" × 72"

NB SAN ANTONIO Rd
OFF-RAMP
CLOSED

USE
DETOUR

6" CAP CALTRANS SERIES E
6" CAP CALTRANS SERIES E
6" CAP CALTRANS SERIES E
5" CAP CALTRANS SERIES E (42" X 24")

SPECIAL (D)

INSTALL SIGN 7 DAYS
PRIOR TO NB SAN ANTONIO Rd
OFF-RAMP CLOSURE

THIS PLAN ACCURATE FOR CONSTURCTION AREA SIGN WORK ONLY.

CONSTRUCTION AREA SIGNS

NO SCALE

CS-23

REVISED BY	DATE REVISED
A C	01/24/11

AILEEN CABICO — CALCULATED-DESIGNED BY
RUTA JARIWALA — CHECKED BY
CHRISTOPHER LILLIE — CONSULTANT FUNCTIONAL SUPERVISOR

STATE OF CALIFORNIA - DEPARTMENT OF TRANSPORTATION
Caltrans

LAST REVISION 01-24-11 | DATE PLOTTED => 15-JUL-2011 TIME PLOTTED => 12:49

NOTE: FOR ALL SIGN PANELS, BACKGROUND IS ORANGE COLOR AND LEGEND IS BLACK

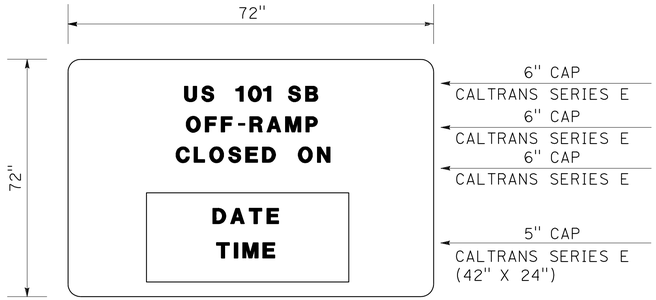

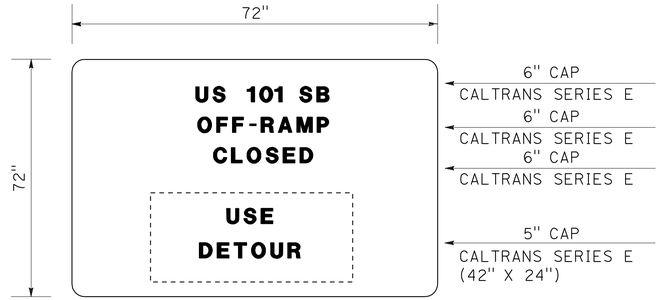

SPECIAL (E)

INSTALL SIGN 7 DAYS
PRIOR TO US 101 SB
OFF-RAMP CLOSURE

SPECIAL (F) AND (G)
NOT USED

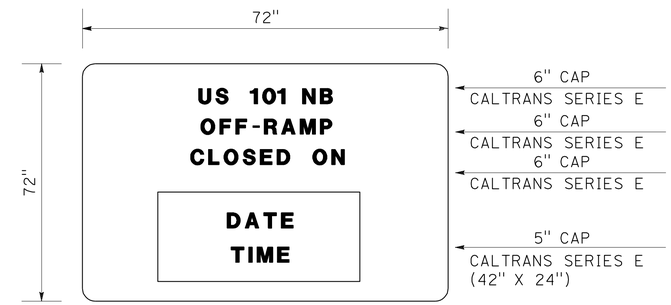

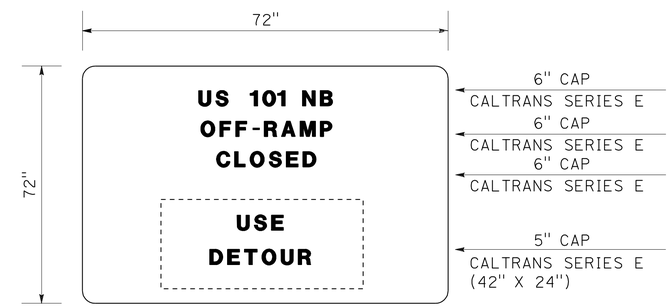

SPECIAL (H)

INSTALL SIGN 7 DAYS
PRIOR TO US 101 NB
OFF-RAMP CLOSURE

THIS PLAN ACCURATE FOR CONSTRUCTION AREA SIGN WORK ONLY.

CONSTRUCTION AREA SIGNS

NO SCALE

CS-24

Dist	COUNTY	ROUTE	POST MILES TOTAL PROJECT	SHEET No.	TOTAL SHEETS
04	SCI	101	48.7/52.0	397	993

REGISTERED CIVIL ENGINEER 05/13/11 DATE

7-11-11
PLANS APPROVAL DATE

REGISTERED PROFESSIONAL ENGINEER
RUTA JARIWALA
No. C-73840
Exp. 6/30/11
CIVIL
STATE OF CALIFORNIA

THE STATE OF CALIFORNIA OR ITS OFFICERS OR AGENTS SHALL NOT BE RESPONSIBLE FOR THE ACCURACY OR COMPLETENESS OF SCANNED COPIES OF THIS PLAN SHEET.

URS Corporation
100 W San Fernando St
Suite 200
San Jose, CA 95113

Santa Clara Valley
Transportation Authority
3331 N First Street
San Jose, CA 95134

STATE OF CALIFORNIA - DEPARTMENT OF TRANSPORTATION
Caltrans

CONSULTANT FUNCTIONAL SUPERVISOR: CHRISTOPHER LILLIE
CALCULATED-DESIGNED BY: AILEEN CABICO
CHECKED BY: RUTA JARIWALA
REVISED BY: A C
DATE REVISED: 05/11/11

LAST REVISION 05-11-11 | DATE PLOTTED => 15-JUL-2011 | TIME PLOTTED => 12:49

NOTE: FOR ALL SIGN PANELS, BACKGROUND IS ORANGE COLOR AND LEGEND IS BLACK

SPECIAL (I) (J) AND (L)
NOT USED

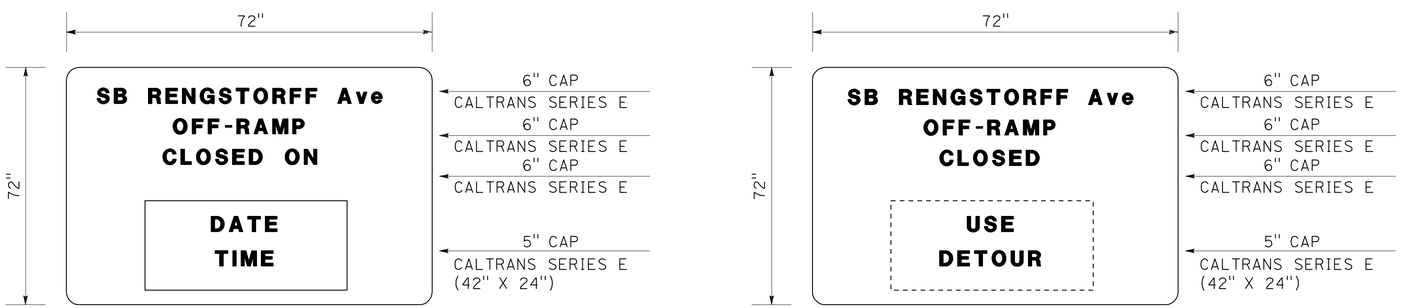

SPECIAL (K)

INSTALL SIGN 7 DAYS
PRIOR TO RENGSTORFF
Ave OFF-RAMP CLOSURE

THIS PLAN ACCURATE FOR CONSTRUCTION AREA SIGN WORK ONLY.

CONSTRUCTION AREA SIGNS

NO SCALE

CS-25

Dist	COUNTY	ROUTE	POST MILES TOTAL PROJECT	SHEET No.	TOTAL SHEETS
04	SCI	101	48.7/52.0	398	993

REGISTERED CIVIL ENGINEER 05/13/11 DATE

7-11-11
PLANS APPROVAL DATE

REGISTERED PROFESSIONAL ENGINEER
RUTA JARIWALA
No. C-73840
Exp. 6/30/11
CIVIL
STATE OF CALIFORNIA

THE STATE OF CALIFORNIA OR ITS OFFICERS OR AGENTS SHALL NOT BE RESPONSIBLE FOR THE ACCURACY OR COMPLETENESS OF SCANNED COPIES OF THIS PLAN SHEET.

URS Corporation
100 W San Fernando St
Suite 200
San Jose, CA 95113

Santa Clara Valley
Transportation Authority
3331 N First Street
San Jose, CA 95134

STATE OF CALIFORNIA - DEPARTMENT OF TRANSPORTATION
Caltrans

CONSULTANT FUNCTIONAL SUPERVISOR: CHRISTOPHER LILLIE
CALCULATED-DESIGNED BY: AILEEN CABICO
CHECKED BY: RUTA JARIWALA
REVISED BY: A C
DATE REVISED: 05/11/11

LAST REVISION 05-11-11
DATE PLOTTED => 15-JUL-2011
TIME PLOTTED => 12:49

NOTE: FOR ALL SIGN PANELS, BACKGROUND IS ORANGE COLOR AND LEGEND IS BLACK

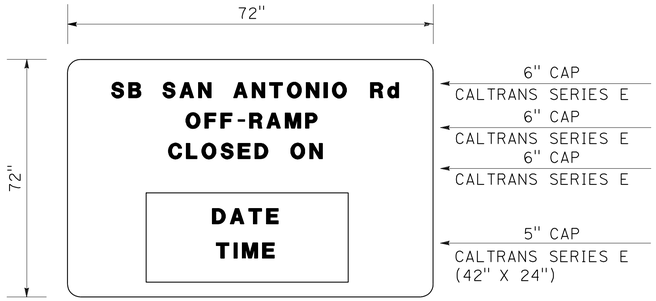

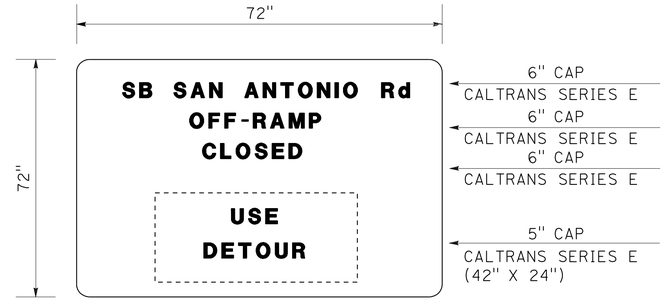

SPECIAL (M)

INSTALL SIGN 7 DAYS
PRIOR TO SB SAN ANTONIO Rd
OFF-RAMP CLOSURE

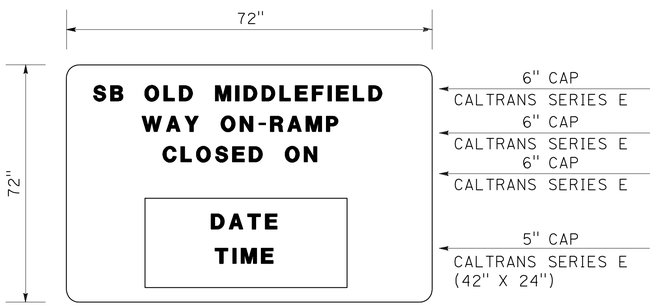

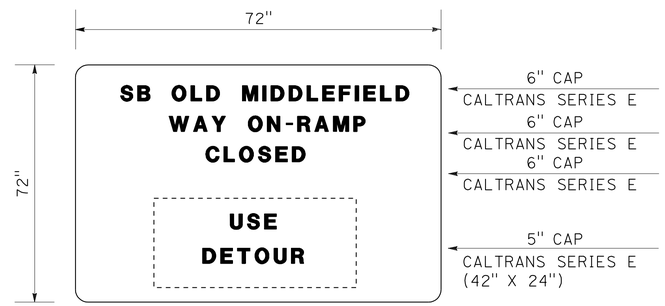

SPECIAL (N)

INSTALL SIGN 7 DAYS
PRIOR TO SB OLD MIDDLEFIELD
WAY ON-RAMP CLOSURE

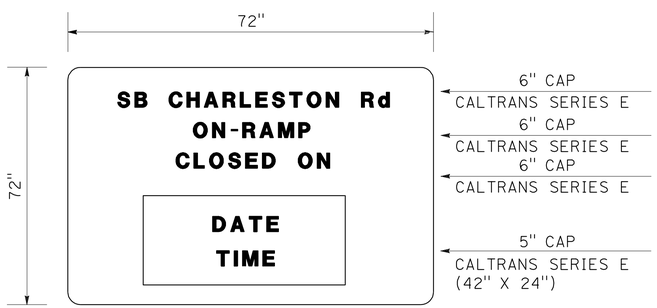

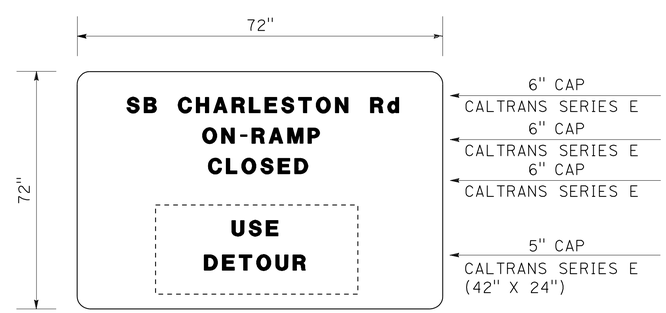

SPECIAL (O)

INSTALL SIGN 7 DAYS
PRIOR TO SB CHARLESTON Rd
ON-RAMP CLOSURE

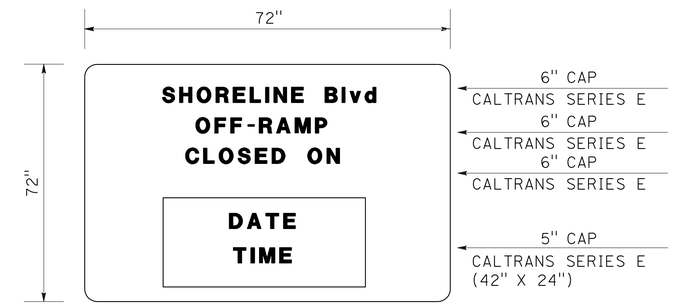

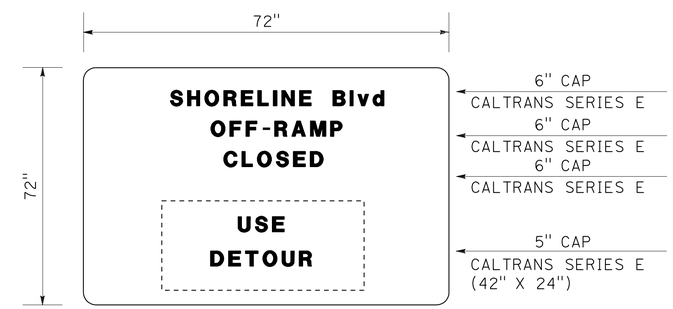

SPECIAL (P)

INSTALL SIGN 7 DAYS
PRIOR TO SHORELINE Blvd
OFF-RAMP CLOSURE

THIS PLAN ACCURATE FOR CONSTRUCTION AREA SIGN WORK ONLY.

CONSTRUCTION AREA SIGNS

NO SCALE

CS-26

Dist	COUNTY	ROUTE	POST MILES TOTAL PROJECT	SHEET No.	TOTAL SHEETS
04	SCI	101	48.7/52.0	399	993

REGISTERED CIVIL ENGINEER 01/31/11 DATE

7-11-11
PLANS APPROVAL DATE

REGISTERED PROFESSIONAL ENGINEER RUTA JARIWALA No. C-73840 Exp. 6/30/11 CIVIL STATE OF CALIFORNIA

THE STATE OF CALIFORNIA OR ITS OFFICERS OR AGENTS SHALL NOT BE RESPONSIBLE FOR THE ACCURACY OR COMPLETENESS OF SCANNED COPIES OF THIS PLAN SHEET.

URS Corporation
100 W San Fernando St
Suite 200
San Jose, CA 95113

Santa Clara Valley
Transportation Authority
3331 N First Street
San Jose, CA 95134

STATE OF CALIFORNIA - DEPARTMENT OF TRANSPORTATION
Caltrans

CONSULTANT FUNCTIONAL SUPERVISOR: CHRISTOPHER LILLIE
CALCULATED-DESIGNED BY: AILEEN CABICO
CHECKED BY: RUTA JARIWALA
REVISED BY: A C
DATE REVISED: 01/24/11

LAST REVISION 01-24-11 | DATE PLOTTED => 15-JUL-2011 | TIME PLOTTED => 12:49

Dist	COUNTY	ROUTE	POST MILES TOTAL PROJECT	SHEET No.	TOTAL SHEETS
04	SCI	101	48.7/52.0	400	993

REGISTERED CIVIL ENGINEER 05/13/11 DATE

7-11-11
PLANS APPROVAL DATE

REGISTERED PROFESSIONAL ENGINEER
RUTA JARIWALA
No. C-73840
Exp. 6/30/11
CIVIL
STATE OF CALIFORNIA

THE STATE OF CALIFORNIA OR ITS OFFICERS OR AGENTS SHALL NOT BE RESPONSIBLE FOR THE ACCURACY OR COMPLETENESS OF SCANNED COPIES OF THIS PLAN SHEET.

URS Corporation
100 W San Fernando St
Suite 200
San Jose, CA 95113

Santa Clara Valley
Transportation Authority
3331 N First Street
San Jose, CA 95134

NOTE: FOR ALL SIGN PANELS, BACKGROUND IS ORANGE COLOR AND LEGEND IS BLACK

SPECIAL (Q) AND (S)
NOT USED

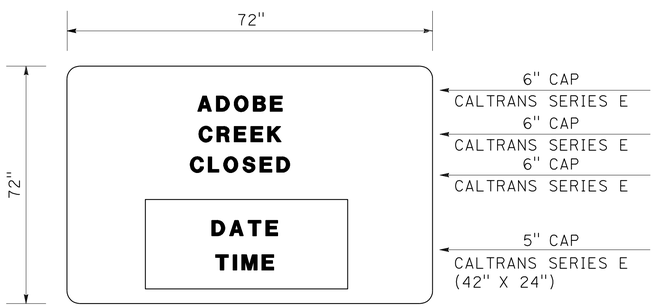

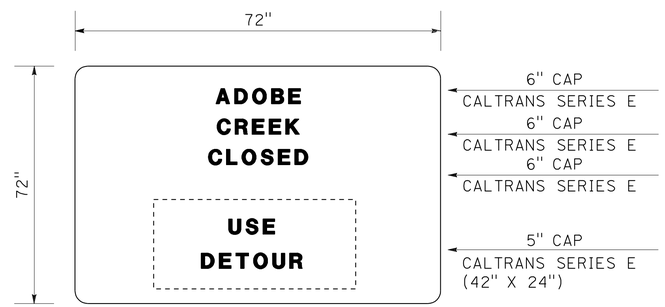

SPECIAL (R)

INSTALL SIGN 7 DAYS
PRIOR TO ADOBE
CREEK CLOSURE

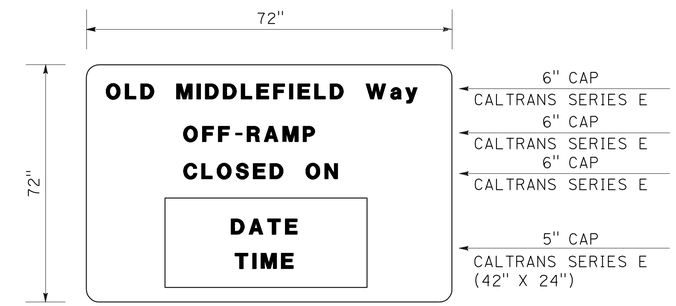

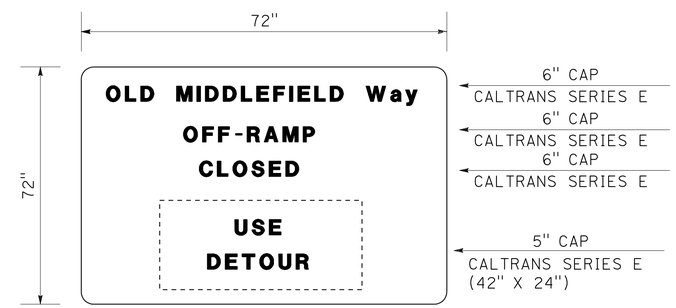

SPECIAL (T)

INSTALL SIGN 7 DAYS
PRIOR TO
OLD MIDDLEFIELD Way
OFF-RAMP CLOSURE

CONSTRUCTION AREA SIGNS

NO SCALE

CS-27

STATE OF CALIFORNIA - DEPARTMENT OF TRANSPORTATION
Caltrans

CONSULTANT FUNCTIONAL SUPERVISOR: CHRISTOPHER LILLIE
CALCULATED-DESIGNED BY: AILEEN CABICO
CHECKED BY: RUTA JARIWALA
REVISED BY: A C
DATE REVISED: 05-11-11

LAST REVISION 05-11-11
DATE PLOTTED => 15-JUL-2011
TIME PLOTTED => 13:55