DIST	COUNTY	ROUTE	POST MILES TOTAL PROJECT	SHEET No.	TOTAL SHEETS
04	Nap	29	47.0/47.2	101	146

Mary K Beall 3/15/14
REGISTERED CIVIL ENGINEER DATE

June 23, 2014
PLANS APPROVAL DATE

REGISTERED PROFESSIONAL ENGINEER
MARY K. BEALL
No. C76357
Exp. 12/31/14
CIVIL
STATE OF CALIFORNIA

The State of California or its officers or agents shall not be responsible for the accuracy or completeness of scanned copies of this plan sheet.

GENERAL NOTES
LOAD AND RESISTANCE FACTOR DESIGN
Superstructure
with LOAD FACTOR DESIGN
Substructure

DESIGN:

AASHTO LRFD Bridge Design Specifications, 4th edition with the 2007 Interims and the California Amendments v2011 except that abutments are designed using Bridge Design Specifications (2000) ('96 AASHTO w/Revisions by Caltrans) with SERVICE-I Limit State loads from AASHTO LRFD.

SEISMIC DESIGN:

Caltrans Seismic Design Criteria (SDC), Version 1.6 dated Nov, 2010

DEAD LOAD:

Includes 35 psf for future wearing surface.

LIVE LOADING:

HL93 and permit design load.

SEISMIC LOADING:

Soil profile type D
Magnitude group 7.25 +/- 0.25
Peak Rock Acceleration 0.45g

CONCRETE:

fy = 60 ksi
f'c = 3.6 ksi
n = 8
See prestressing notes.

DESIGN SCOUR ELEVATION:

Abutment 1 = 1698'
Abutment 2 = 1696.5'

SPREAD FOOTING DATA TABLE

Location	Permissible Gross Contact Stress (ksf)	Allowable Gross Bearing Capacity (ksf)
Abut 1	N/A	26
Abut 2	N/A	26

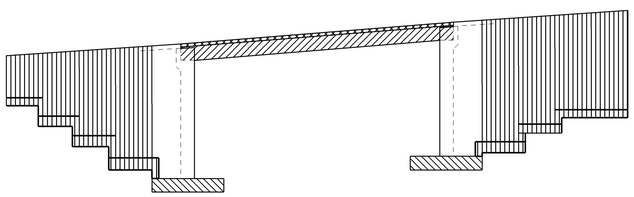

VIEW TOWARDS SOUTH

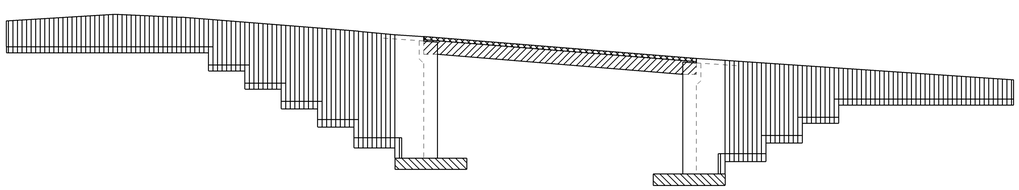

VIEW TOWARDS NORTH

- Structural Concrete, Bridge
- Structural Concrete, Bridge Footing
- Prestressed Precast I girder (Prestressed concrete)
- Structural Concrete, Retaining Wall
- Structural Concrete, Bridge Deck (4 ksi @ 28 days)

CONCRETE STRENGTH AND TYPE LIMITS

No Scale

INDEX TO PLANS

SHEET NO.	TITLE
1	GENERAL PLAN
2	INDEX TO PLANS
3	DECK CONTOURS
4	FOUNDATION PLAN
5	ABUTMENT 1 LAYOUT
6	ABUTMENT 2 LAYOUT
7	ABUTMENT DETAILS No.1
8	ABUTMENT DETAILS No.2
9	ABUTMENT DETAILS No.3
10	ABUTMENT DETAILS No.4
11	ABUTMENT DETAILS No.5
12	ABUTMENT DETAILS No.6
13	ABUTMENT DETAILS No.7
14	TYPICAL SECTION
15	GIRDER LAYOUT
16	PRECAST PRESTRESSED I GIRDER
17	STRUCTURE APPROACH TYPE EQ(10)
18	STRUCTURE DRAINAGE DETAILS
19	ARCHITECTURAL TREATMENT DETAILS No. 1
20	ARCHITECTURAL TREATMENT DETAILS No. 2
21	ARCHITECTURAL TREATMENT DETAILS - TYPE 736
22	ARCHITECTURAL TREATMENT DETAILS - TYPE 742
23	TUBULAR BICYCLE RAILING ON 736 BARRIER
24	TUBULAR BICYCLE RAILING ON 742 BARRIER
25	EXISTING BRIDGE REMOVAL DETAILS No. 1
26	EXISTING BRIDGE REMOVAL DETAILS No. 2
27	LOG OF TEST BORINGS 1 OF 4
28	LOG OF TEST BORINGS 2 OF 4
29	LOG OF TEST BORINGS 3 OF 4
30	LOG OF TEST BORINGS 4 OF 4

STANDARD PLANS DATED 2010

	DETAIL	DESCRIPTION
	A10A	ABBREVIATIONS (SHEET 1 OF 2)
RSP	A10B	ABBREVIATIONS (SHEET 2 OF 2)
	A10C	LINES AND SYMBOLS (SHEET 1 OF 3)
	A10D	LINES AND SYMBOLS (SHEET 2 OF 3)
	A10E	LINES AND SYMBOLS (SHEET 3 OF 3)
	A10F	LEGEND - SOIL (SHEET 1 OF 2)
	A10G	LEGEND - SOIL (SHEET 2 OF 2)
	A10H	LEGEND - ROCK
	A62C	LIMITS OF PAYMENT FOR EXCAVATION AND BACKFILL - BRIDGE
	B0-1	BRIDGE DETAILS
	B0-3	BRIDGE DETAILS
	B0-5	BRIDGE DETAILS
	B0-13	BRIDGE DETAILS
RSP	B3-1A	RETAINING WALL TYPE 1 (CASE 1)
	B3-6	RETAINING WALL DETAILS No. 2
	B6-21	JOINT SEALS (MAX MOVEMENT RATING = 2")
RSP	B11-56	CONCRETE BARRIER TYPE 736
RSP	B11-57	CONCRETE BARRIER TYPE 742

STANDARD PLAN SHEET NO.
DETAIL NO.

DESIGN	BY Nora Kyo	CHECKED Mary Beall	
DETAILS	BY E. Hallstrom	CHECKED Mary Beall	
QUANTITIES	BY Nora Kyo	CHECKED E. Hallstrom/M. Beall	

STATE OF CALIFORNIA
DEPARTMENT OF TRANSPORTATION

DIVISION OF ENGINEERING SERVICES
STRUCTURE DESIGN
DESIGN BRANCH 8

BRIDGE NO. 21-0113
POST MILE 47.13

TROUTDALE CREEK BRIDGE (REPLACEMENT)
INDEX TO PLANS

STRUCTURES DESIGN DETAIL SHEET (ENGLISH) (REV. 09-01-10)

ORIGINAL SCALE IN INCHES FOR REDUCED PLANS 0 1 2 3

UNIT: 3593
PROJECT NUMBER & PHASE: 04000011041
CONTRACT NO.: 04-4A0901

DISREGARD PRINTS BEARING EARLIER REVISION DATES

REVISION DATES: 8/8/13 9/24/13 10/17/13 3/15/14

SHEET 2 OF 30

FILE => 21-0113-a-itp.dgn

USERNAME => s126550 DATE PLOTTED => 08-JUL-2014 TIME PLOTTED => 16:14

DIST	COUNTY	ROUTE	POST MILES TOTAL PROJECT	SHEET No.	TOTAL SHEETS
04	Nap	29	47.0/47.2	102	146

Mary K Beall 3/15/14
REGISTERED CIVIL ENGINEER DATE

June 23, 2014
PLANS APPROVAL DATE

REGISTERED PROFESSIONAL ENGINEER
MARY K. BEALL
No. C76357
Exp. 12/31/14
CIVIL
STATE OF CALIFORNIA

The State of California or its officers or agents shall not be responsible for the accuracy or completeness of scanned copies of this plan sheet.

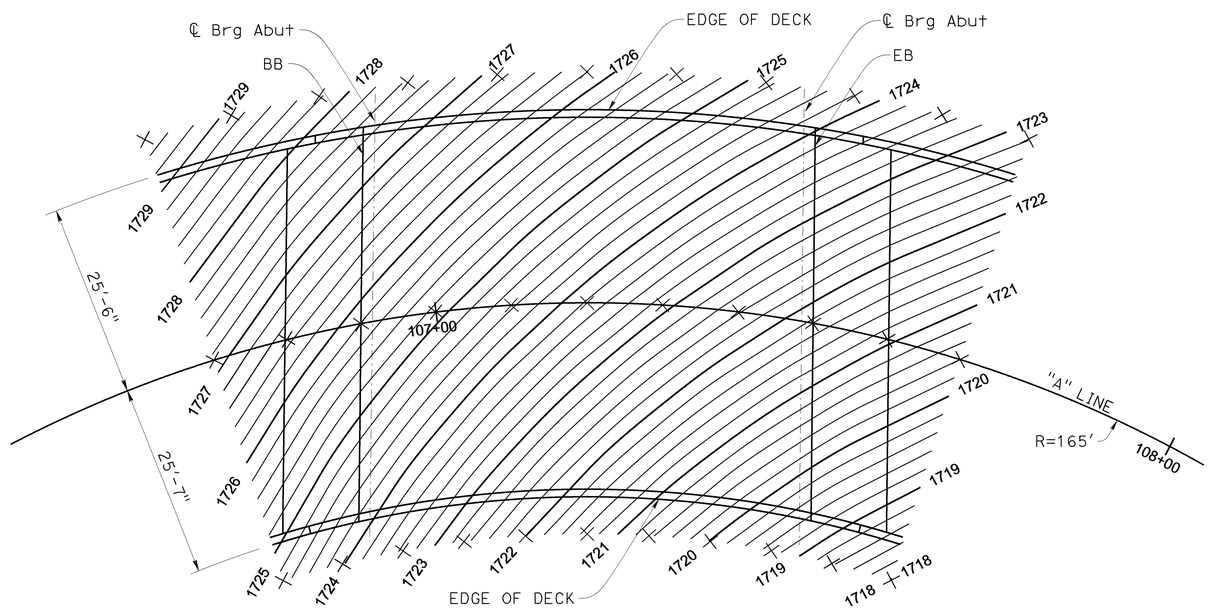

NOTES:
0.2' Contour interval
X - Indicates 10' station interval along layout line
Contours do not include camber

DECK CONTOURS
1"=10'-0"

Note:
The contractor shall verify all controlling field dimensions before ordering or fabricating any material.

	BY	CHECKED
DESIGN	Nora Kyo	Mary Beall
DETAILS	E. Hallstrom	Mary Beall
QUANTITIES	Nora Kyo	E. Hallstrom/M. Beall

STATE OF CALIFORNIA
DEPARTMENT OF TRANSPORTATION

DIVISION OF ENGINEERING SERVICES
STRUCTURE DESIGN
DESIGN BRANCH 8

BRIDGE NO. 21-0113
POST MILE 47.13

TROUTDALE CREEK BRIDGE (REPLACEMENT)
DECK COUNTOURS

STRUCTURES DESIGN DETAIL SHEET (ENGLISH) (REV. 09-01-10)

ORIGINAL SCALE IN INCHES FOR REDUCED PLANS 0 1 2 3

UNIT: 3593
PROJECT NUMBER & PHASE: 04000011041
CONTRACT NO.: 04-4A0901

DISREGARD PRINTS BEARING EARLIER REVISION DATES

REVISION DATES: 8/6/13 8/14/13 9/3/13 3/15/14

SHEET 3 OF 30

FILE => 21-0113-d-dc.dgn

USERNAME => s128530 DATE PLOTTED => 08-JUL-2014 TIME PLOTTED => 16:16

DIST	COUNTY	ROUTE	POST MILES TOTAL PROJECT	SHEET No.	TOTAL SHEETS
04	Nap	29	47.0/47.2	103	146

Mary K Beall 3/15/14
REGISTERED CIVIL ENGINEER DATE

June 23, 2014
PLANS APPROVAL DATE

REGISTERED PROFESSIONAL ENGINEER MARY K. BEALL No. C76357 Exp. 12/31/14 CIVIL STATE OF CALIFORNIA

The State of California or its officers or agents shall not be responsible for the accuracy or completeness of electronic copies of this plan sheet.

CURVE DATA

No.	R	Δ	T	L
Ⓐ	165.00	109°12'42"	232.23	314.51
Ⓑ	850.00	15°49'19"	118.11	234.72
Ⓒ	18.35	45°54'12"	7.77	14.70
Ⓓ	139.42	19°16'30"	23.67	46.90
Ⓔ	139.42	25°40'27"	31.77	62.47

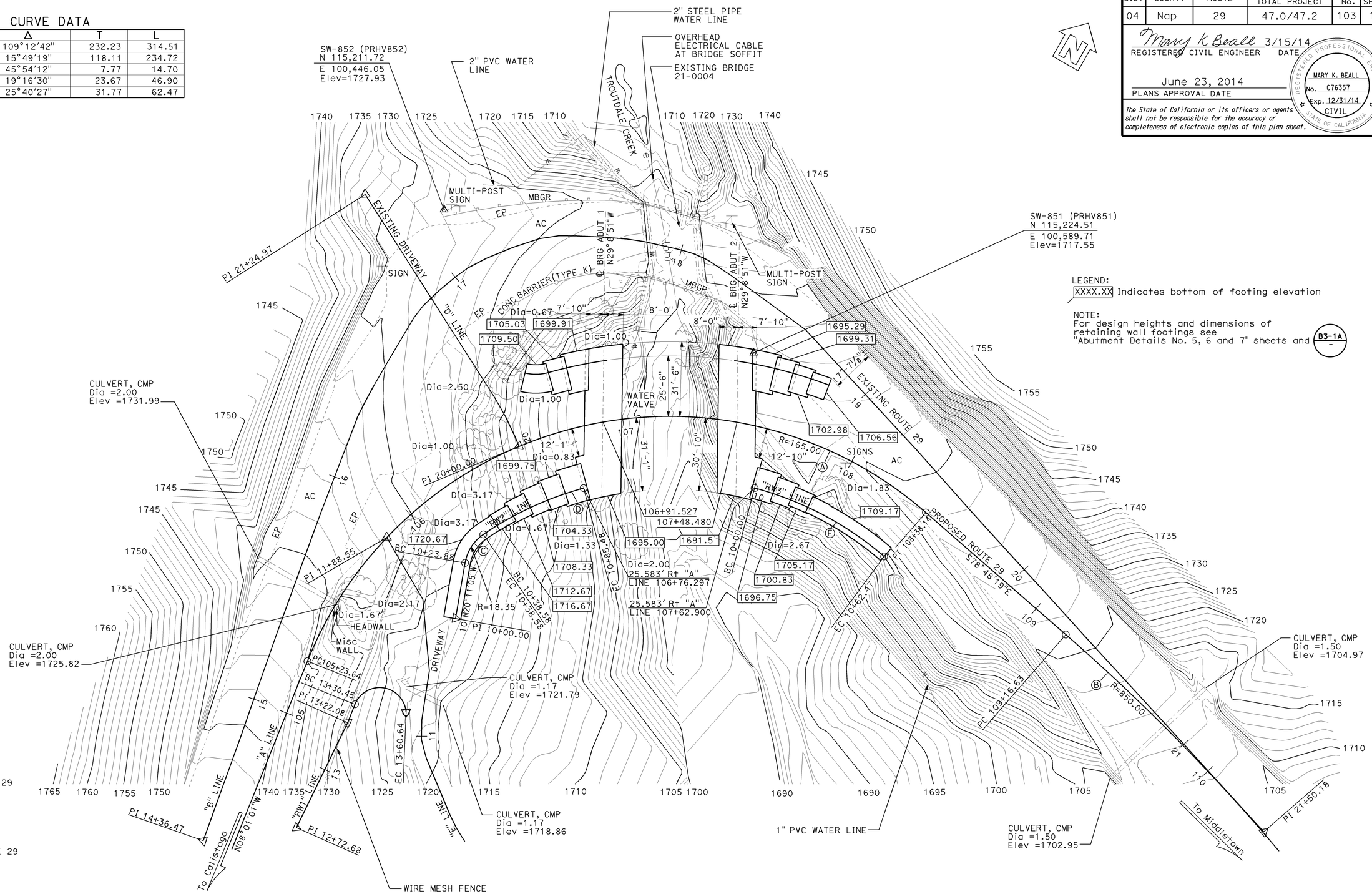

LEGEND:
XXXX.XX Indicates bottom of footing elevation

NOTE:
For design heights and dimensions of retaining wall footings see "Abutment Details No. 5, 6 and 7" sheets and B3-1A

SURVEY CONTROL

SW-851 (PRHV851)
Fnd 1" IP w/ CTPP
30.10 FT Lt. NEW ROUTE 29
Sta. 107+50.10
N 115,224.51
E 100,589.71
Elev. = 1717.55

SW-852 (PRHV852)
Fnd 1" IP w/ CTP
104.74 FT Lt. NEW ROUTE 29
Sta. 106+60.22
N 115,211.72
E 100,446.05
Elev. = 1727.93

PRELIMINARY INVESTIGATION SECTION

SCALE 1"=20'	VERT.DATUM NGVD29	PHOTOGRAMMETRY AS OF: X			
	HORZ.DATUM ARBITRARY	SURVEYED	BY DISTRICT/PI	CHECKED	BY D. IVY 04/2013
	ALIGNMENT TIES Dist TRAVERSE SHEET	DRAFTED	BY T. ZOLNIKOV 04/2013	CHECKED	BY S. SOU 04/2013

	BY	CHECKED
DESIGN	Nora Kyo	Nirav Shah
DETAILS	E. Hallstrom	Mary Beall
QUANTITIES	Nora Kyo	E. Hallstrom/M. Beall

STATE OF CALIFORNIA
DEPARTMENT OF TRANSPORTATION

DIVISION OF ENGINEERING SERVICES
STRUCTURE DESIGN
DESIGN BRANCH 8

BRIDGE NO. 21-0113
POST MILE 47.13

TROUTDALE CREEK BRIDGE (REPLACEMENT)
FOUNDATION PLAN

STRUCTURES FOUNDATION PLAN SHEET (ENGLISH) (REV. 09-01-10)

ORIGINAL SCALE IN INCHES FOR REDUCED PLANS 0 1 2 3

UNIT: 3646
PROJECT NUMBER & PHASE: 04000011041
CONTRACT NO.: 04-4A0901

DISREGARD PRINTS BEARING EARLIER REVISION DATES
REVISION DATES 04/24/13 04/27/13 08/12/13 3/15/14

SHEET 4 OF 30

FILE => 21-0113-e-fpl01.dgn

USERNAME => s128530 DATE PLOTTED => 09-JUL-2014 TIME PLOTTED => 07:48

DIST	COUNTY	ROUTE	POST MILES TOTAL PROJECT	SHEET No.	TOTAL SHEETS
04	Nap	29	47.0/47.2	104	146

Mary K Beall 3/15/14
REGISTERED CIVIL ENGINEER DATE

June 23, 2014
PLANS APPROVAL DATE

REGISTERED PROFESSIONAL ENGINEER
MARY K. BEALL
No. C76357
Exp. 12/31/14
CIVIL
STATE OF CALIFORNIA

The State of California or its officers or agents shall not be responsible for the accuracy or completeness of scanned copies of this plan sheet.

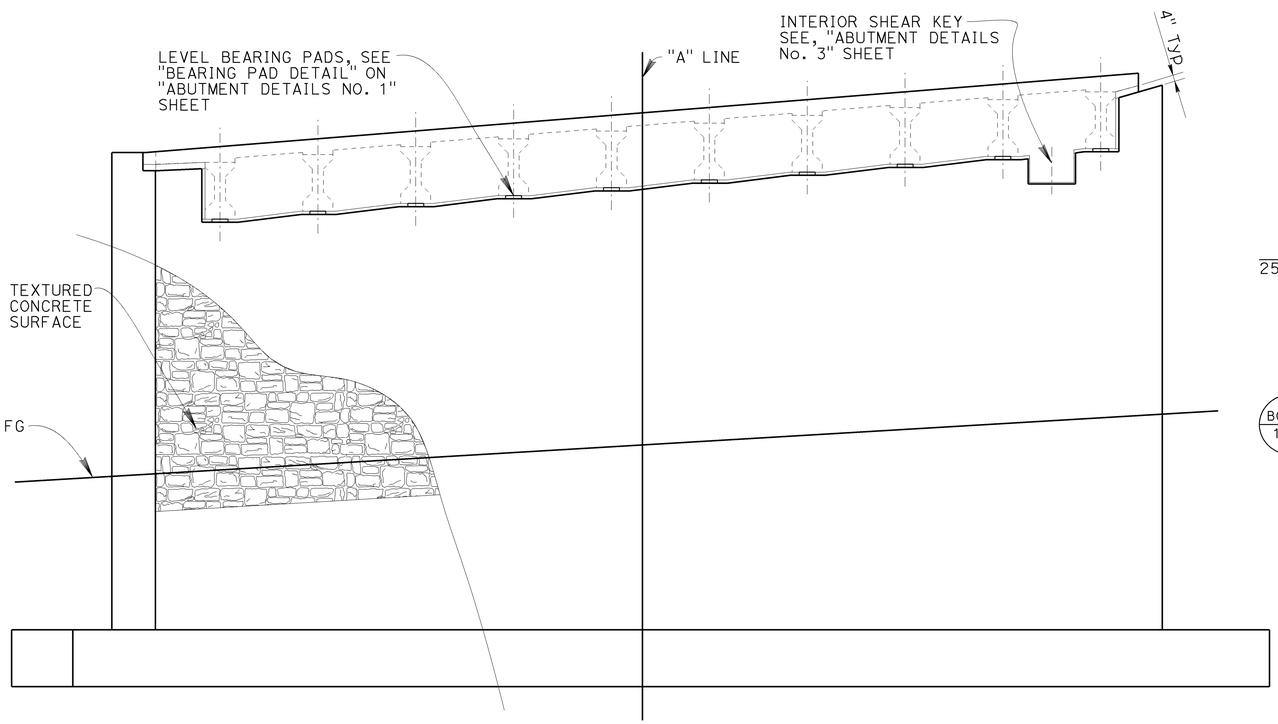

ELEVATION
1/4"=1'-0"

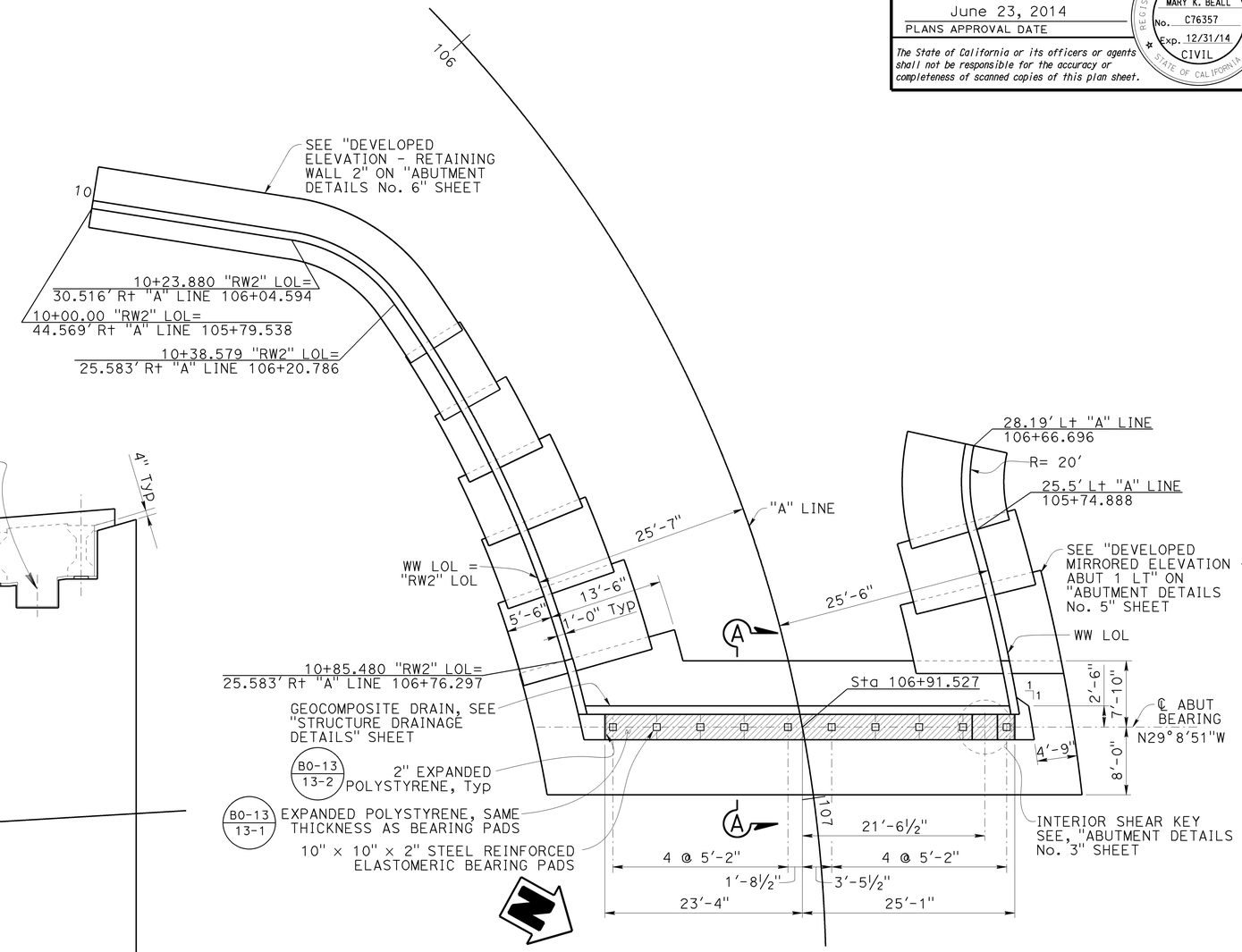

Note: For Section A-A see "ABUTMENT DETAILS NO. 1" sheet

PLAN
1/8"=1'-0"

Note:
The contractor shall verify all controlling field dimensions before ordering or fabricating any material.

DESIGN	BY Nora Kyo	CHECKED Mary Beall	
DETAILS	BY E. Hallstrom	CHECKED Mary Beall	
QUANTITIES	BY Nora Kyo	CHECKED E. Hallstrom/M. Beall	

STATE OF CALIFORNIA
DEPARTMENT OF TRANSPORTATION

DIVISION OF ENGINEERING SERVICES
STRUCTURE DESIGN
DESIGN BRANCH 8

BRIDGE NO. 21-0113
POST MILE 47.13

TROUTDALE CREEK BRIDGE (REPLACEMENT)
ABUTMENT 1 LAYOUT

STRUCTURES DESIGN DETAIL SHEET (ENGLISH) (REV. 09-01-10)

ORIGINAL SCALE IN INCHES FOR REDUCED PLANS 0 1 2 3

UNIT: 3593
PROJECT NUMBER & PHASE: 04000011041
CONTRACT NO.: 04-4A0901

DISREGARD PRINTS BEARING EARLIER REVISION DATES

REVISION DATES: 8/26/13 9/26/13 10/29/13 3/15/14

SHEET 5 OF 30

FILE => 21-0113-f-abut_01-lo.dgn

USERNAME => s128530 DATE PLOTTED => 09-JUL-2014 TIME PLOTTED => 07:53

DIST	COUNTY	ROUTE	POST MILES TOTAL PROJECT	SHEET No.	TOTAL SHEETS
04	Nap	29	47.0/47.2	105	146

Mary K Beall 3/15/14
REGISTERED CIVIL ENGINEER DATE

June 23, 2014
PLANS APPROVAL DATE

REGISTERED PROFESSIONAL ENGINEER
MARY K. BEALL
No. C76357
Exp. 12/31/14
CIVIL
STATE OF CALIFORNIA

The State of California or its officers or agents shall not be responsible for the accuracy or completeness of scanned copies of this plan sheet.

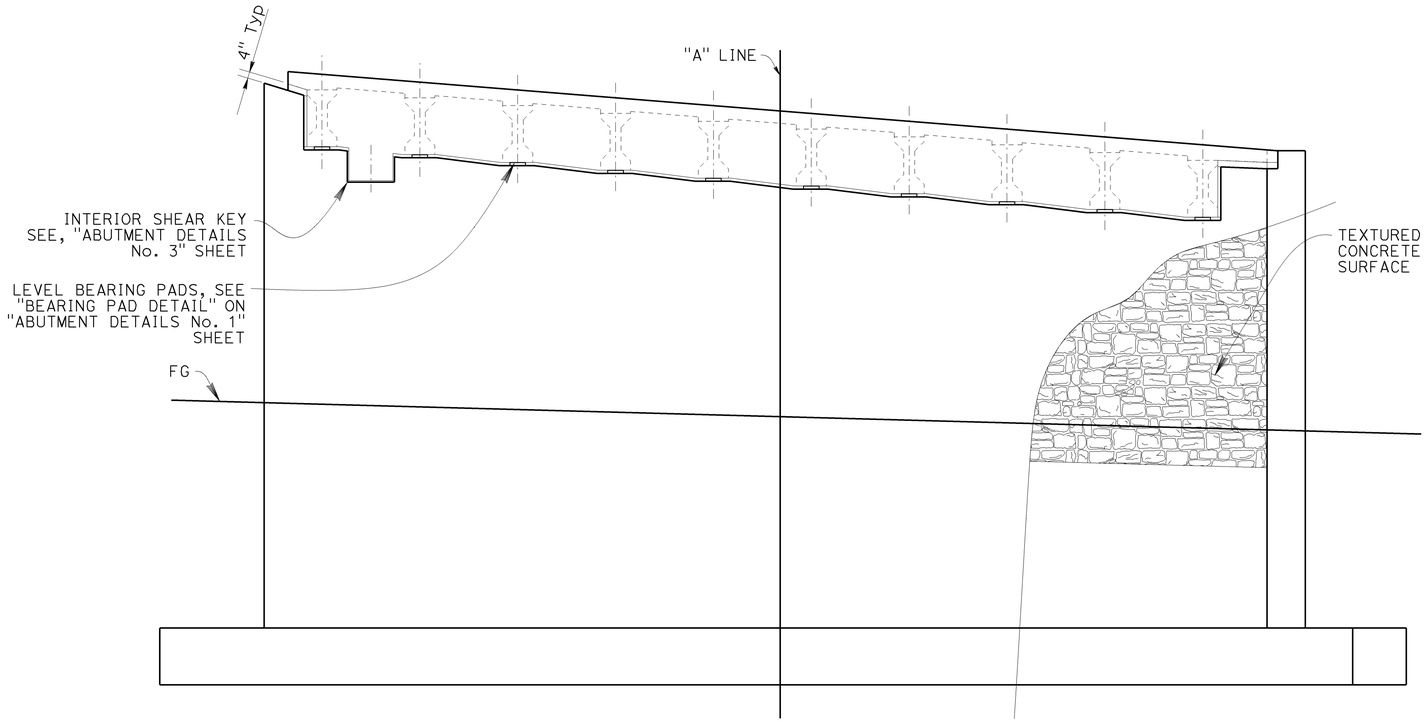

ELEVATION
1/4"=1'-0"

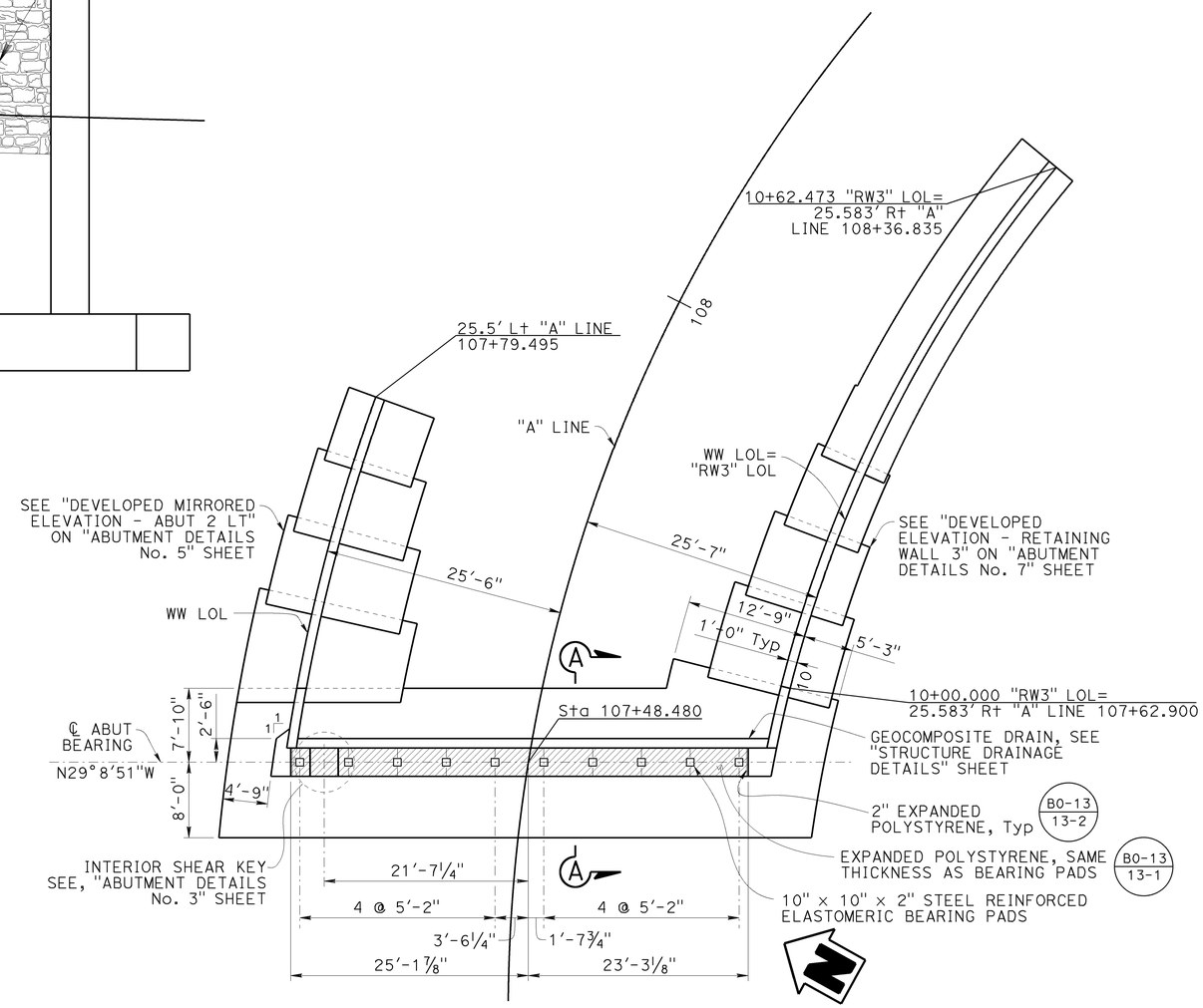

Note: For Section A-A see "ABUTMENT DETAILS NO. 1" sheet

PLAN
1/8"=1'-0"

Note:
The contractor shall verify all controlling field dimensions before ordering or fabricating any material.

	BY	CHECKED
DESIGN	Nora Kyo	Mary Beall
DETAILS	E. Hallstrom	Mary Beall
QUANTITIES	Nora Kyo	E. Hallstrom/M. Beall

STATE OF CALIFORNIA
DEPARTMENT OF TRANSPORTATION

DIVISION OF ENGINEERING SERVICES
STRUCTURE DESIGN
DESIGN BRANCH 8

BRIDGE NO. 21-0113
POST MILE 47.13

TROUTDALE CREEK BRIDGE (REPLACEMENT)
ABUTMENT 2 LAYOUT

STRUCTURES DESIGN DETAIL SHEET (ENGLISH) (REV. 09-01-10)

ORIGINAL SCALE IN INCHES FOR REDUCED PLANS 0 1 2 3

UNIT: 3593
PROJECT NUMBER & PHASE: 04000011041
CONTRACT NO.: 04-4A0901

DISREGARD PRINTS BEARING EARLIER REVISION DATES → 8/8/13 9/5/13 10/27/13 3/15/14

SHEET 6 OF 30

FILE => 21-0113-f-abut_02-lo.dgn

USERNAME => s126530 DATE PLOTTED => 09-JUL-2014 TIME PLOTTED => 07:58

DIST	COUNTY	ROUTE	POST MILES TOTAL PROJECT	SHEET No.	TOTAL SHEETS
04	Nap	29	47.0/47.2	106	146

Mary K Beall 3/15/14
REGISTERED CIVIL ENGINEER DATE

June 23, 2014
PLANS APPROVAL DATE

REGISTERED PROFESSIONAL ENGINEER
MARY K. BEALL
No. C76357
Exp. 12/31/14
CIVIL
STATE OF CALIFORNIA

The State of California or its officers or agents shall not be responsible for the accuracy or completeness of scanned copies of this plan sheet.

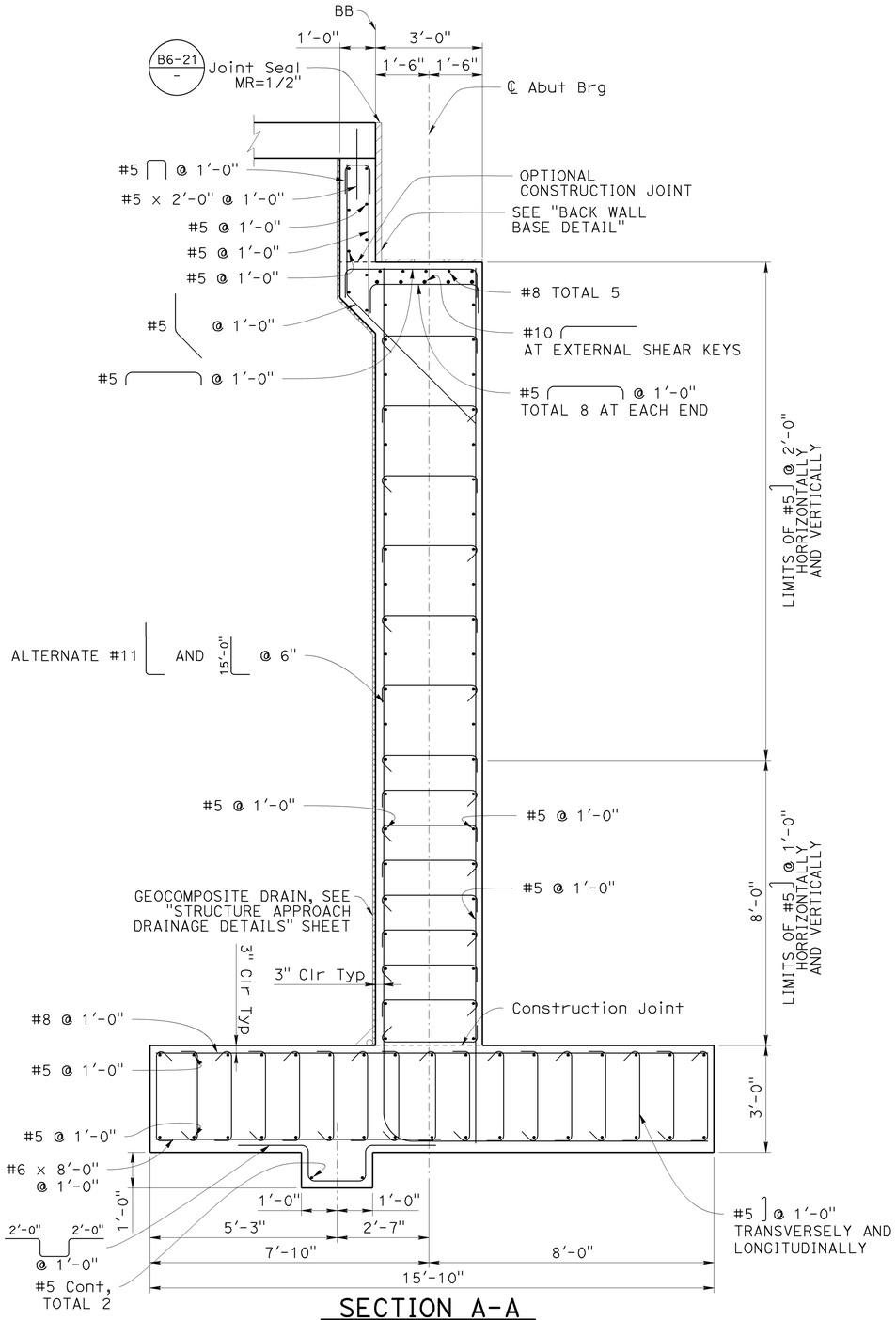

SECTION A-A
1/2" = 1'-0"

Note:
The contractor shall verify all controlling field dimensions before ordering or fabricating any material.

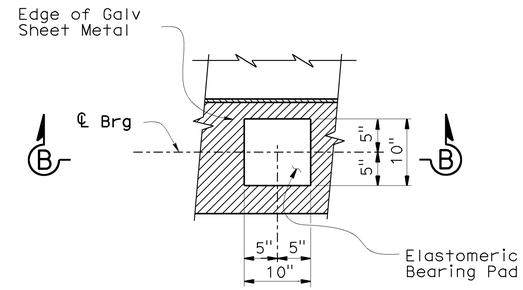

PLAN

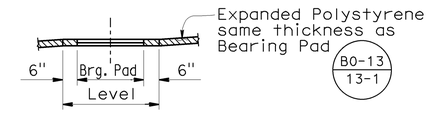

SECTION B-B

BEARING PAD DETAIL
No Scale

Details typical at all bearing pads

Note:
Girders level in both directions

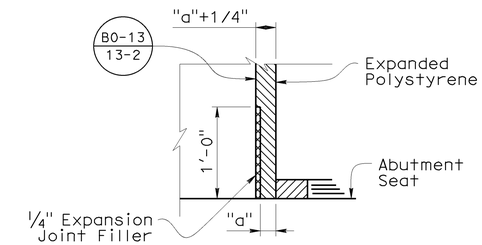

BACK WALL BASE DETAIL
No Scale

Note:
See B6-21 - for dimension "a"

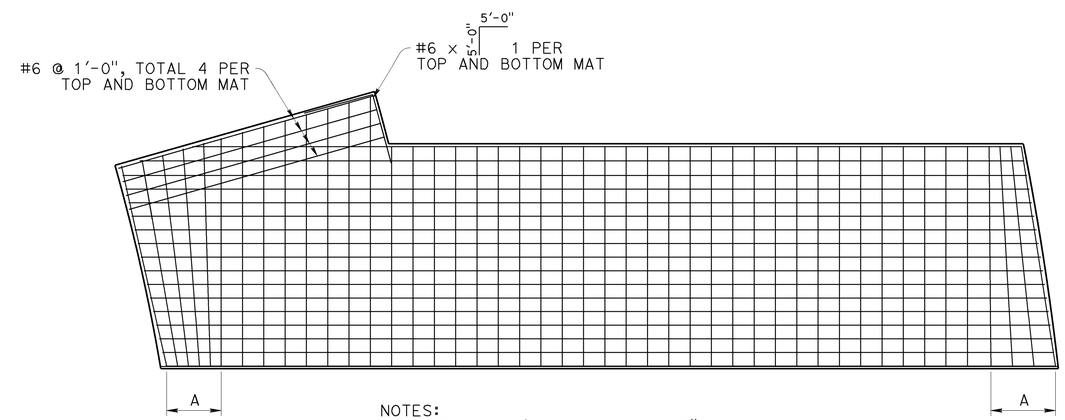

NOTES:
1. A= Space reinforcement at 6" at narrow end and 9" at wide end until reinforcement is perpendicular to centerline of abutment bearing.
2. Abutment 1 shown, Abutment 2 similar
3. Wing wall footing reinforcement not shown

FOOTING EDGE REINFORCEMENT
3/16"=1'

DESIGN	BY Nora Kyo	CHECKED Mary Beall	
DETAILS	BY E. Hallstrom	CHECKED Mary Beall	
QUANTITIES	BY Nora Kyo	CHECKED E. Hallstrom/M. Beall	

STATE OF CALIFORNIA
DEPARTMENT OF TRANSPORTATION

DIVISION OF ENGINEERING SERVICES
STRUCTURE DESIGN
DESIGN BRANCH 8

BRIDGE NO. 21-0113
POST MILE 47.13

TROUTDALE CREEK BRIDGE (REPLACEMENT)
ABUTMENT DETAILS No. 1

STRUCTURES DESIGN DETAIL SHEET (ENGLISH) (REV. 09-01-10)

ORIGINAL SCALE IN INCHES FOR REDUCED PLANS 0 1 2 3

UNIT: 3593
PROJECT NUMBER & PHASE: 04000011041
CONTRACT NO.: 04-4A0901

DISREGARD PRINTS BEARING EARLIER REVISION DATES

REVISION DATES 8/8/13 10/17/13 3/15/14

SHEET 7 OF 30

FILE => 21-0113-f-abut_det01.dgn

USERNAME => s128530 DATE PLOTTED => 09-JUL-2014 TIME PLOTTED => 08:00

DIST	COUNTY	ROUTE	POST MILES TOTAL PROJECT	SHEET No.	TOTAL SHEETS
04	Nap	29	47.0/47.2	107	146

Mary K Beall 3/15/14
REGISTERED CIVIL ENGINEER DATE

June 23, 2014
PLANS APPROVAL DATE

REGISTERED PROFESSIONAL ENGINEER
MARY K. BEALL
No. C76357
Exp. 12/31/14
CIVIL
STATE OF CALIFORNIA

The State of California or its officers or agents shall not be responsible for the accuracy or completeness of scanned copies of this plan sheet.

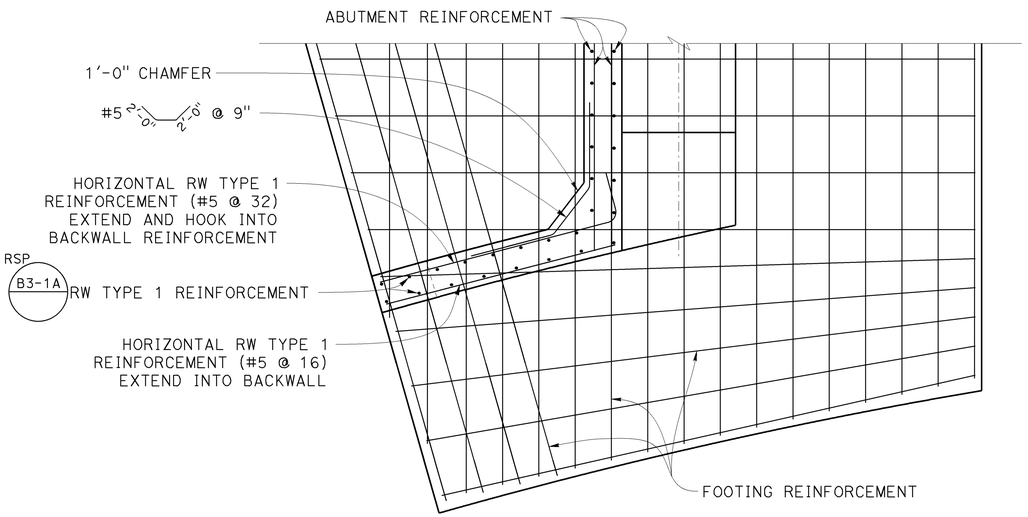

SECTION C-C
1/2"=1'-0"

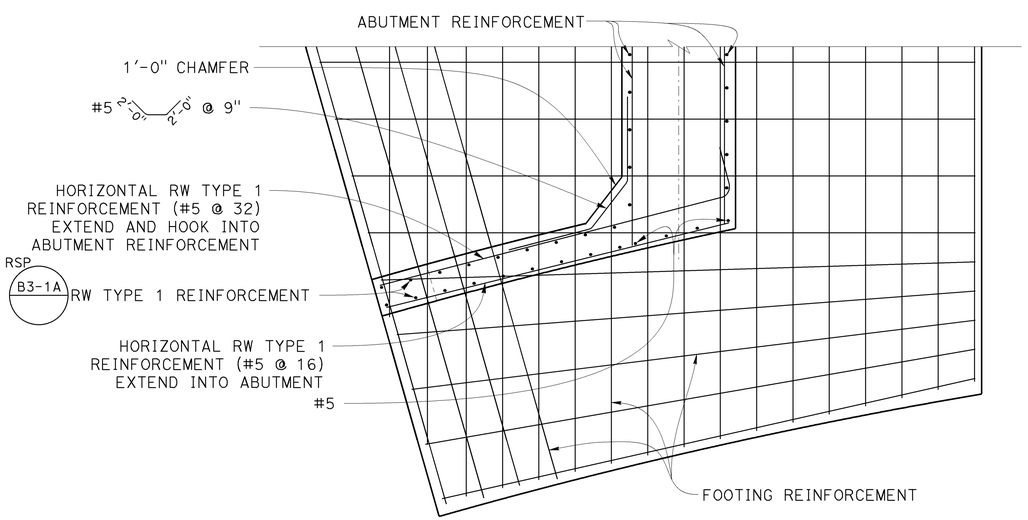

SECTION D-D
1/2"=1'-0"

Note:
The contractor shall verify all controlling field dimensions before ordering or fabricating any material.

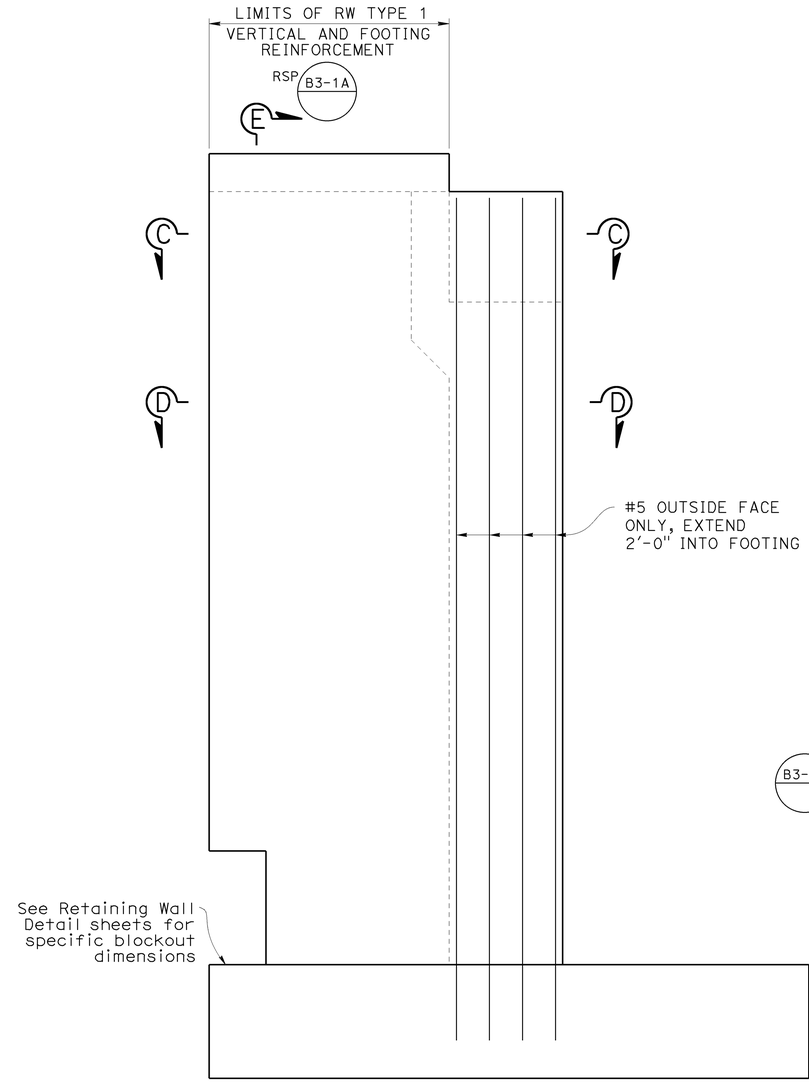

ELEVATION
1/2"=1'-0"

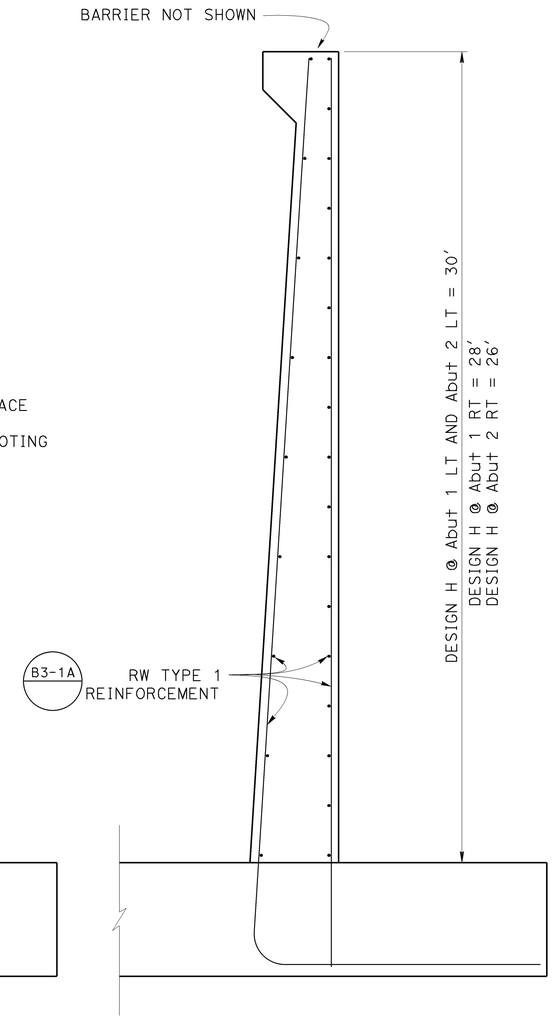

NOTE:
ABUTMENT 1 RIGHT SHOWN, REINFORCEMENT FOR OTHER WING WALLS IS SIMILAR

SECTION E-E
1/2"=1'-0"

DESIGN	BY Nora Kyo	CHECKED Mary Beall	
DETAILS	BY E. Hallstrom	CHECKED Mary Beall	
QUANTITIES	BY Nora Kyo	CHECKED E. Hallstrom/M. Beall	

STATE OF CALIFORNIA
DEPARTMENT OF TRANSPORTATION

DIVISION OF ENGINEERING SERVICES
STRUCTURE DESIGN
DESIGN BRANCH 8

BRIDGE NO. 21-0113
POST MILE 47.13

TROUTDALE CREEK BRIDGE (REPLACEMENT)
ABUTMENT DETAILS No. 2

STRUCTURES DESIGN DETAIL SHEET (ENGLISH) (REV. 09-01-10)

ORIGINAL SCALE IN INCHES FOR REDUCED PLANS 0 1 2 3

UNIT: 3593
PROJECT NUMBER & PHASE: 04000011041
CONTRACT NO.: 04-4A0901

DISREGARD PRINTS BEARING EARLIER REVISION DATES

REVISION DATES: 8/8/13 10/17/13 3/15/14

SHEET 8 OF 30

FILE => 21-0113-f-abut_det02.dgn

USERNAME => s128530 DATE PLOTTED => 09-JUL-2014 TIME PLOTTED => 08:02

DIST	COUNTY	ROUTE	POST MILES TOTAL PROJECT	SHEET No.	TOTAL SHEETS
04	Nap	29	47.0/47.2	108	146

Mary K Beall 3/15/14
REGISTERED CIVIL ENGINEER DATE

June 23, 2014
PLANS APPROVAL DATE

REGISTERED PROFESSIONAL ENGINEER
MARY K. BEALL
No. C76357
Exp. 12/31/14
CIVIL
STATE OF CALIFORNIA

The State of California or its officers or agents shall not be responsible for the accuracy or completeness of scanned copies of this plan sheet.

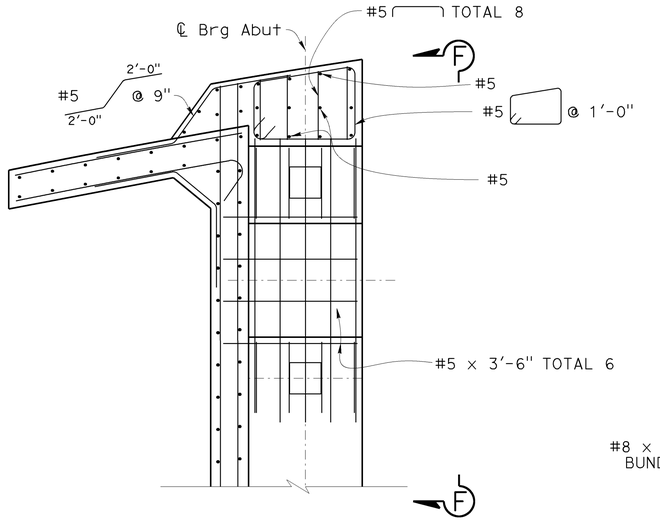

Note:
Abutment 1 LT shown, Abutment 2 LT similar.

SHEAR KEY @ ABUT 1 LT
1/2"=1'-0"

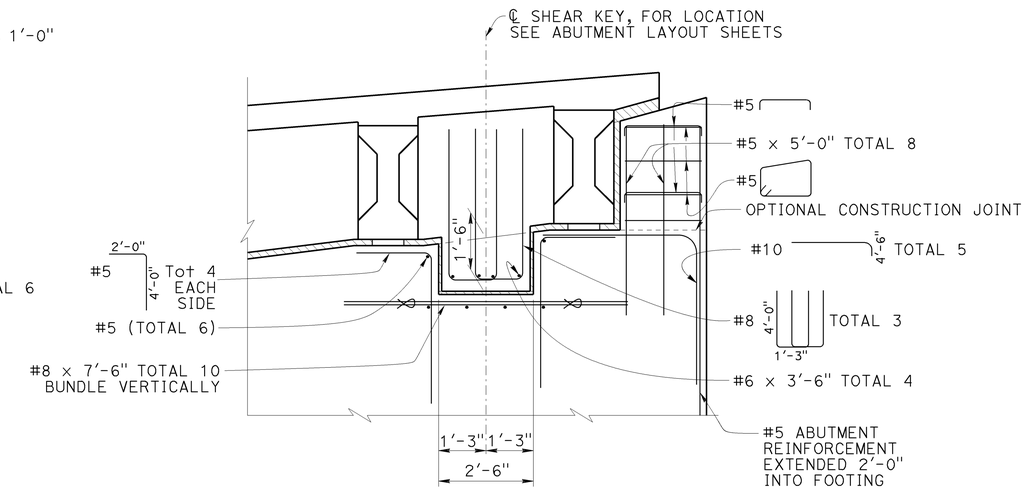

VIEW F-F
1/2"=1'-0"

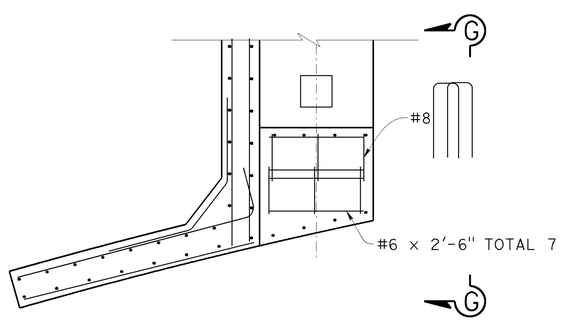

Note:
Abutment 1 RT shown, Abutment 2 RT similar.

SHEAR KEY @ ABUT 1 RT
1/2"=1'-0"

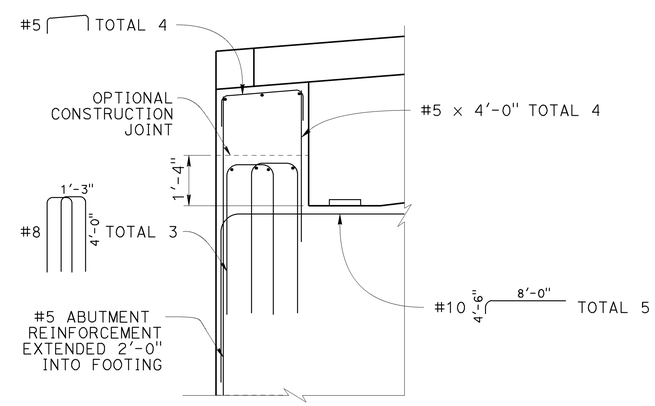

VIEW G-G
1/2"=1'-0"

Note:
Some reinforcement not shown for clarity.

Note:
The contractor shall verify all controlling field dimensions before ordering or fabricating any material.

	BY	CHECKED
DESIGN	Nora Kyo	Mary Beall
DETAILS	E. Hallstrom	Mary Beall
QUANTITIES	Nora Kyo	E. Hallstrom/M. Beall

STATE OF CALIFORNIA
DEPARTMENT OF TRANSPORTATION

DIVISION OF ENGINEERING SERVICES
STRUCTURE DESIGN
DESIGN BRANCH 8

BRIDGE NO. 21-0113
POST MILE 47.13

TROUTDALE CREEK BRIDGE (REPLACEMENT)
ABUTMENT DETAILS No. 3

STRUCTURES DESIGN DETAIL SHEET (ENGLISH) (REV. 09-01-10)

ORIGINAL SCALE IN INCHES FOR REDUCED PLANS 0 1 2 3

UNIT: 3593
PROJECT NUMBER & PHASE: 04000011041
CONTRACT NO.: 04-4A0901

DISREGARD PRINTS BEARING EARLIER REVISION DATES

REVISION DATES: 8/16/13 10/17/13 3/15/14

SHEET 9 OF 30

FILE => 21-0113-f-abut_det03.dgn

USERNAME => s128530 DATE PLOTTED => 09-JUL-2014 TIME PLOTTED => 08:14

DIST	COUNTY	ROUTE	POST MILES TOTAL PROJECT	SHEET No.	TOTAL SHEETS
04	Nap	29	47.0/47.2	109	146

Mary K Beall 3/15/14
REGISTERED CIVIL ENGINEER DATE

June 23, 2014
PLANS APPROVAL DATE

REGISTERED PROFESSIONAL ENGINEER
MARY K. BEALL
No. C76357
Exp. 12/31/14
CIVIL
STATE OF CALIFORNIA

The State of California or its officers or agents shall not be responsible for the accuracy or completeness of scanned copies of this plan sheet.

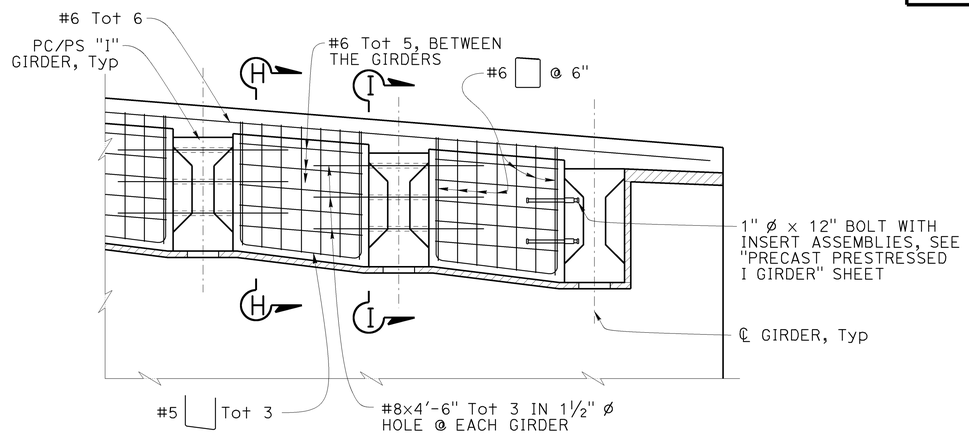

PART ELEVATION
½"=1'-0"

NOTE:
Abutment 2 RT shown, other locations similar.

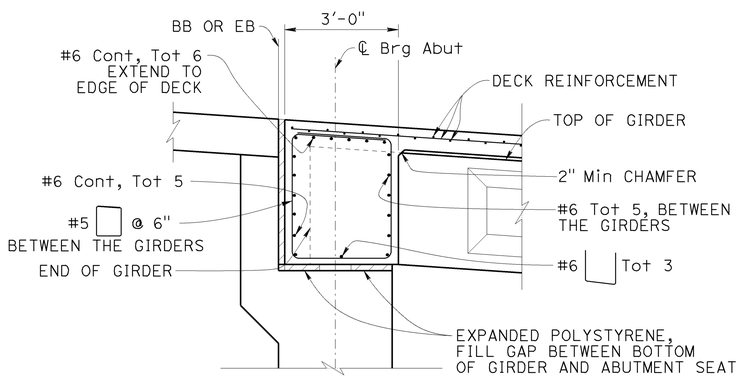

SECTION H-H
½"=1'-0"

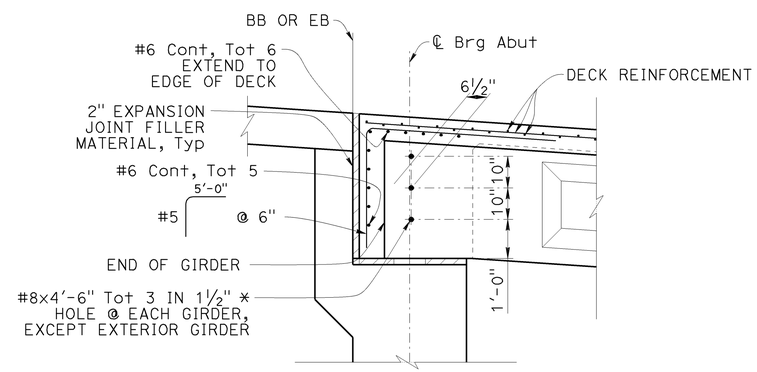

Note:
For details not shown, see "Precast Prestressed I Girder" sheet.

SECTION I-I
½"=1'-0"

Note:
The contractor shall verify all controlling field dimensions before ordering or fabricating any material.

	BY	CHECKED
DESIGN	Nora Kyo	Mary Beall
DETAILS	E. Hallstrom	Mary Beall
QUANTITIES	Nora Kyo	E. Hallstrom/M. Beall

STATE OF CALIFORNIA
DEPARTMENT OF TRANSPORTATION

DIVISION OF ENGINEERING SERVICES
STRUCTURE DESIGN
DESIGN BRANCH 8

BRIDGE NO. 21-0113
POST MILE 47.13

TROUTDALE CREEK BRIDGE (REPLACEMENT)
ABUTMENT DETAILS No. 4

STRUCTURES DESIGN DETAIL SHEET (ENGLISH) (REV. 09-01-10)

ORIGINAL SCALE IN INCHES FOR REDUCED PLANS 0 1 2 3

UNIT: 3593
PROJECT NUMBER & PHASE: 04000011041
CONTRACT NO.: 04-4A0901

DISREGARD PRINTS BEARING EARLIER REVISION DATES

REVISION DATES: 8/16/13 9/26/13 10/29/13 3/15/14

SHEET 10 OF 30

FILE => 21-0113-f-abut_det04.dgn

USERNAME => s128530 DATE PLOTTED => 09-JUL-2014 TIME PLOTTED => 08:15

DIST	COUNTY	ROUTE	POST MILES TOTAL PROJECT	SHEET No.	TOTAL SHEETS
04	Nap	29	47.0/47.2	110	146

Mary K Beall 5/28/14
REGISTERED CIVIL ENGINEER DATE

June 23, 2014
PLANS APPROVAL DATE

REGISTERED PROFESSIONAL ENGINEER
MARY K. BEALL
No. C76357
Exp. 12/31/14
CIVIL
STATE OF CALIFORNIA

The State of California or its officers or agents shall not be responsible for the accuracy or completeness of scanned copies of this plan sheet.

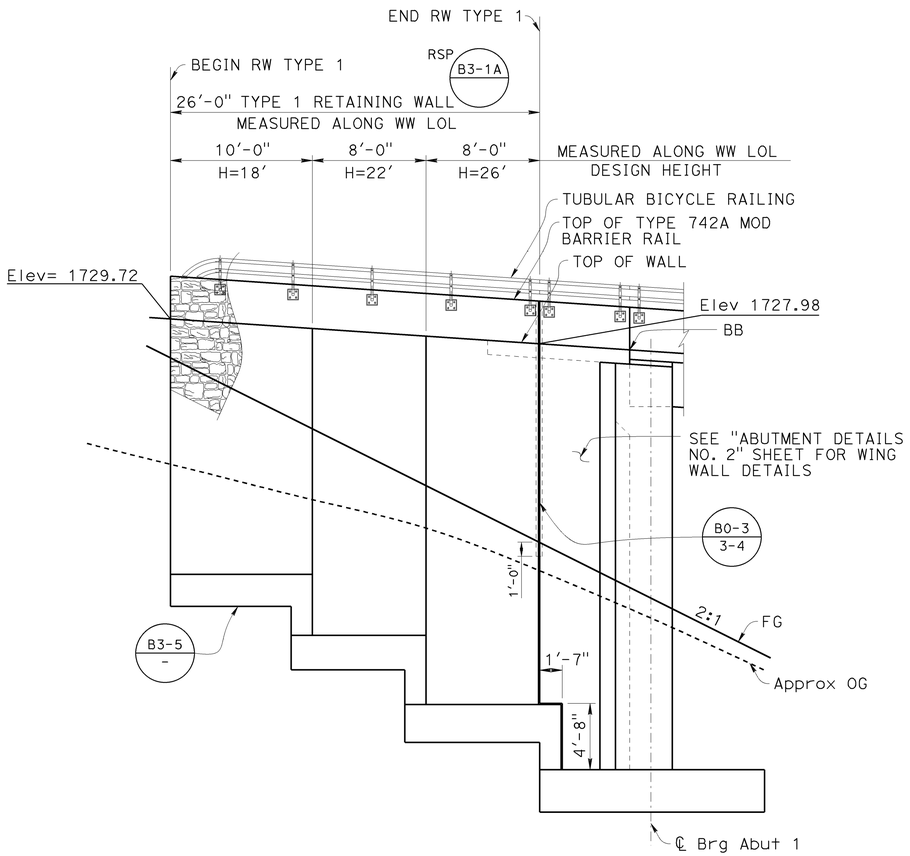

DEVELOPED MIRRORED ELEVATION - ABUT 1 LT

3/16"=1'-0"

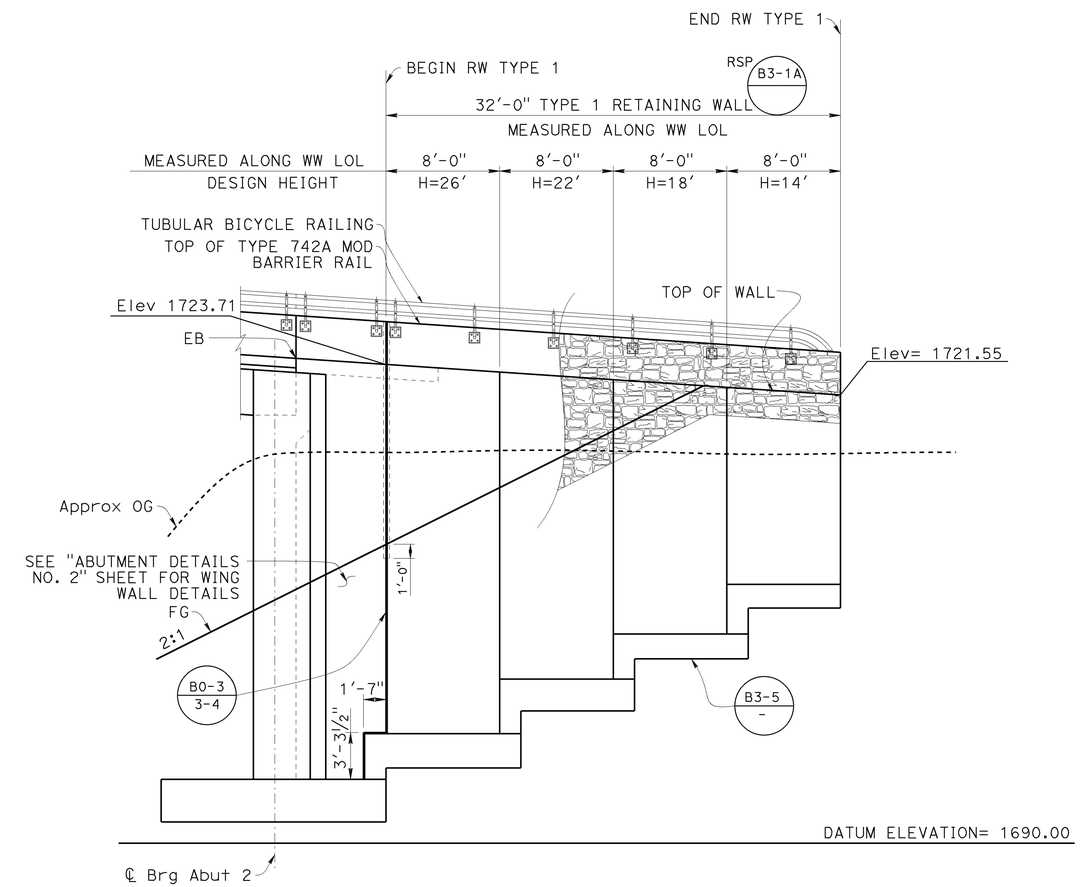

DEVELOPED MIRRORED ELEVATION - ABUT 2 LT

3/16"=1'-0"

NOTES:

1. See "FOUNDATION PLAN" for footing elevations.
2. See RSP B3-1A for wall details.
3. See B0-3 3-1 weep hole and pervious backfill.

Note:
The contractor shall verify all controlling field dimensions before ordering or fabricating any material.

	BY	CHECKED
DESIGN	Nora Kyo	Mary Beall
DETAILS	E. Hallstrom	Mary Beall
QUANTITIES	Nora Kyo	E. Hallstrom/M. Beall

STATE OF CALIFORNIA
DEPARTMENT OF TRANSPORTATION

DIVISION OF ENGINEERING SERVICES
STRUCTURE DESIGN
DESIGN BRANCH 8

BRIDGE NO. 21-0004
POST MILE 47.13

TROUTDALE CREEK BRIDGE (REPLACEMENT)
ABUTMENT DETAILS No. 5

STRUCTURES DESIGN DETAIL SHEET (ENGLISH) (REV. 09-01-10)

ORIGINAL SCALE IN INCHES FOR REDUCED PLANS 0 1 2 3

UNIT: 3593
PROJECT NUMBER & PHASE: 04000011041
CONTRACT NO.: 04-4A0901

DISREGARD PRINTS BEARING EARLIER REVISION DATES
REVISION DATES 8/14/13 5/28/14 3/18/14

SHEET 11 OF 30

FILE => 21-0113-f-abut_det05.dgn

USERNAME => s128530 DATE PLOTTED => 09-JUL-2014 TIME PLOTTED => 08:20

DIST	COUNTY	ROUTE	POST MILES TOTAL PROJECT	SHEET No.	TOTAL SHEETS
04	Nap	29	47.0/47.2	111	146

Mary K Beall 5/28/14
REGISTERED CIVIL ENGINEER DATE

June 23, 2014
PLANS APPROVAL DATE

REGISTERED PROFESSIONAL ENGINEER
MARY K. BEALL
No. C76357
Exp. 12/31/14
CIVIL
STATE OF CALIFORNIA

The State of California or its officers or agents shall not be responsible for the accuracy or completeness of scanned copies of this plan sheet.

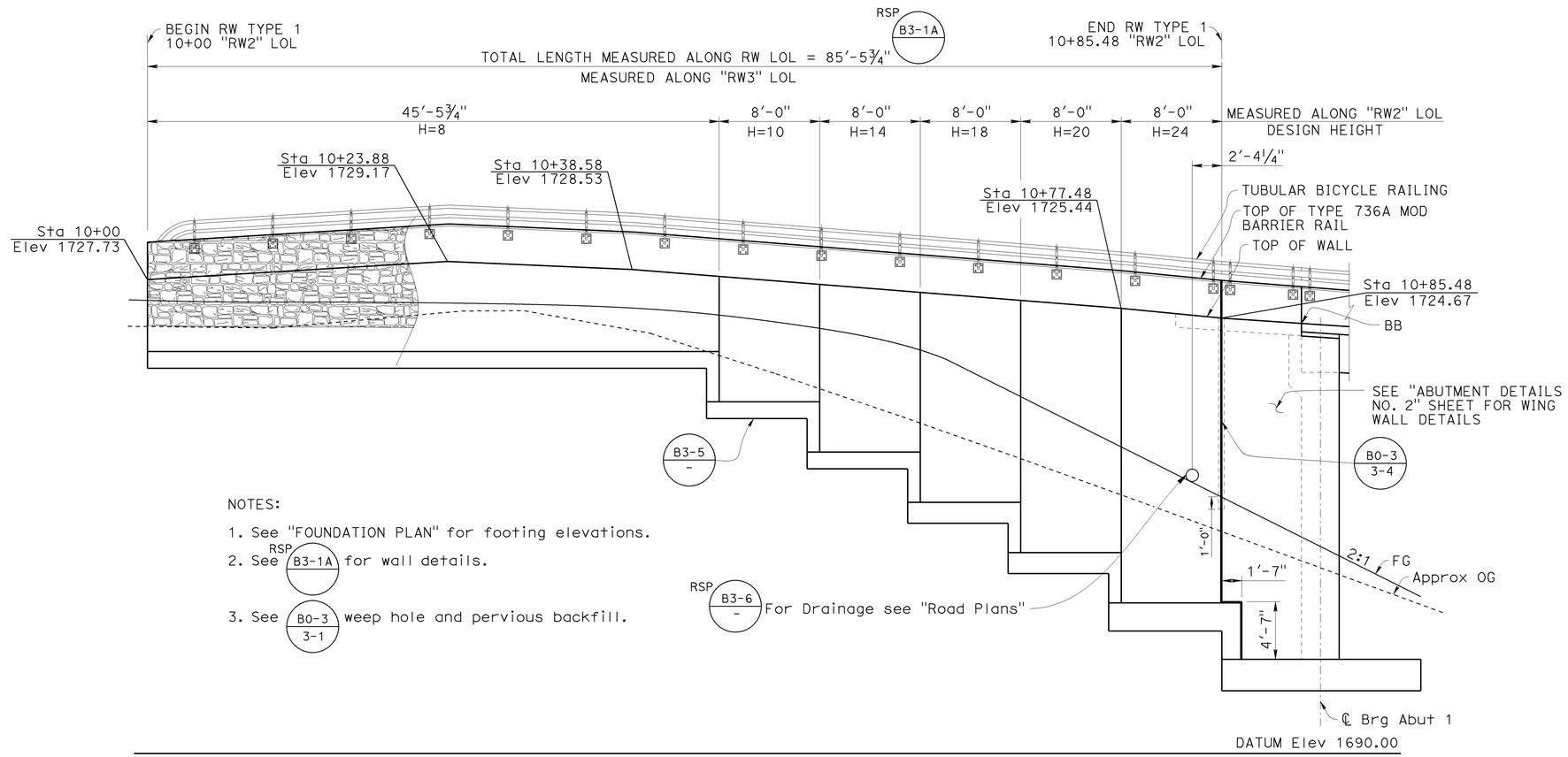

NOTES:

1. See "FOUNDATION PLAN" for footing elevations.
2. See RSP B3-1A for wall details.
3. See B0-3 / 3-1 weep hole and pervious backfill.

DEVELOPED ELEVATION - RETAINING WALL 2

¼"=1'-0"

Note:
The contractor shall verify all controlling field dimensions before ordering or fabricating any material.

	BY	CHECKED
DESIGN	Mary Beall	John Tjoelker
DETAILS	E. Hallstrom	Mary Beall
QUANTITIES	Nora Kyo	E. Hallstrom/M. Beall

STATE OF CALIFORNIA
DEPARTMENT OF TRANSPORTATION

DIVISION OF ENGINEERING SERVICES
STRUCTURE DESIGN
DESIGN BRANCH 8

BRIDGE NO. 21-0004
POST MILE 47.13

TROUTDALE CREEK BRIDGE (REPLACEMENT)
ABUTMENT DETAILS No. 6

STRUCTURES DESIGN DETAIL SHEET (ENGLISH) (REV. 09-01-10)

ORIGINAL SCALE IN INCHES FOR REDUCED PLANS 0 1 2 3

UNIT: 3593
PROJECT NUMBER & PHASE: 04000011041
CONTRACT NO.: 04-4A0901

DISREGARD PRINTS BEARING EARLIER REVISION DATES

REVISION DATES: 9/5/13 5/28/14 3/18/14

SHEET 12 OF 30

FILE => 21-0113-f-abut_det06.dgn

USERNAME => s128530 DATE PLOTTED => 09-JUL-2014 TIME PLOTTED => 08:21

DIST	COUNTY	ROUTE	POST MILES TOTAL PROJECT	SHEET No.	TOTAL SHEETS
04	Nap	29	47.0/47.2	112	146

Mary K Beall 5/28/14
REGISTERED CIVIL ENGINEER DATE

June 23, 2014
PLANS APPROVAL DATE

REGISTERED PROFESSIONAL ENGINEER
MARY K. BEALL
No. C76357
Exp. 12/31/14
CIVIL
STATE OF CALIFORNIA

The State of California or its officers or agents shall not be responsible for the accuracy or completeness of scanned copies of this plan sheet.

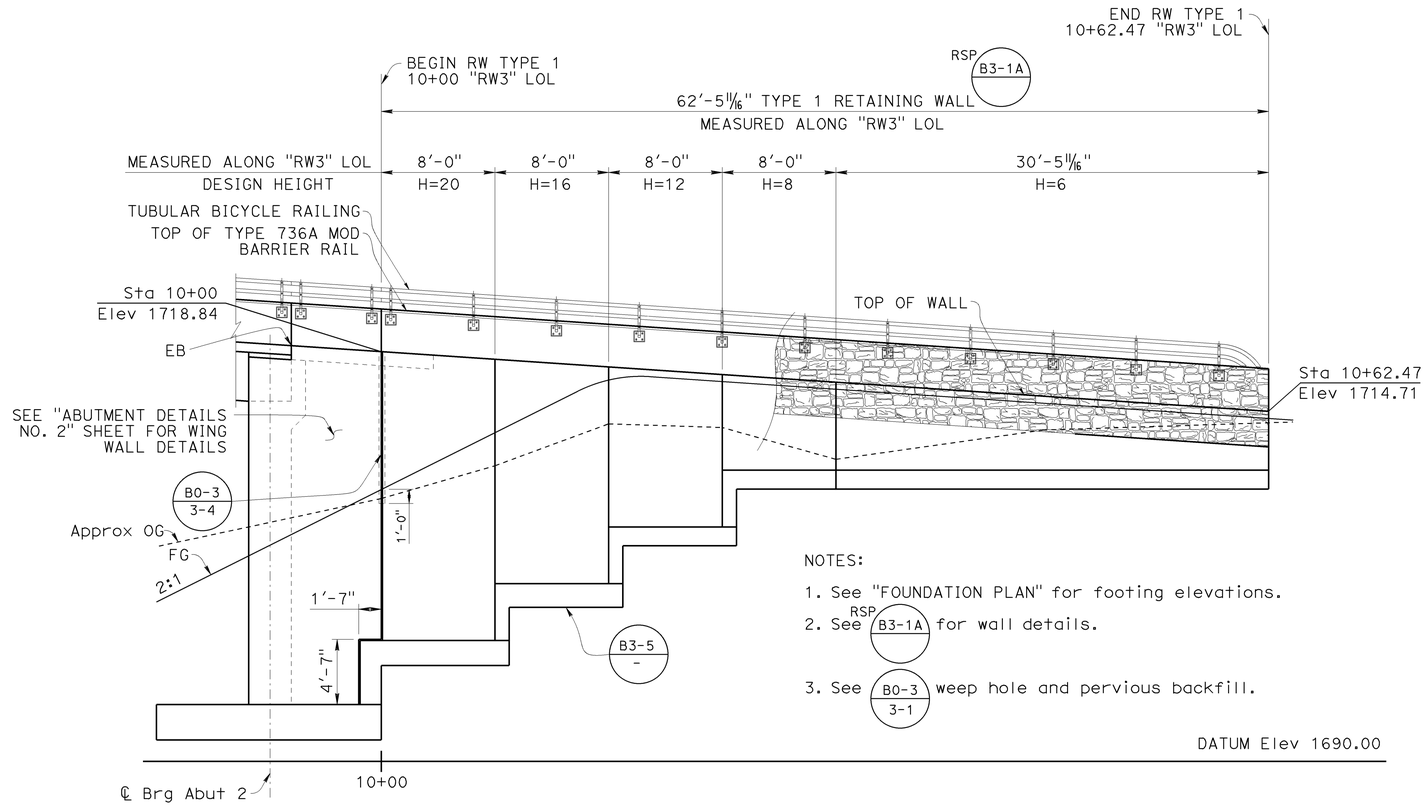

NOTES:

1. See "FOUNDATION PLAN" for footing elevations.
2. See RSP B3-1A for wall details.
3. See B0-3 3-1 weep hole and pervious backfill.

DEVELOPED ELEVATION - RETAINING WALL 3

1/4"=1'-0"

Note:
The contractor shall verify all controlling field dimensions before ordering or fabricating any material.

DESIGN	BY Mary Beall	CHECKED John Tjoelker	
DETAILS	BY E. Hallstrom	CHECKED Mary Beall	
QUANTITIES	BY Nora Kyo	CHECKED E. Hallstrom/M. Beall	

STATE OF CALIFORNIA
DEPARTMENT OF TRANSPORTATION

DIVISION OF ENGINEERING SERVICES
STRUCTURE DESIGN
DESIGN BRANCH 8

BRIDGE NO. 21-0004
POST MILE 47.13

TROUTDALE CREEK BRIDGE (REPLACEMENT)
ABUTMENT DETAILS No. 7

STRUCTURES DESIGN DETAIL SHEET (ENGLISH) (REV. 09-01-10)

ORIGINAL SCALE IN INCHES FOR REDUCED PLANS 0 1 2 3

UNIT: 3593
PROJECT NUMBER & PHASE: 04000011041
CONTRACT NO.: 04-4A0901

DISREGARD PRINTS BEARING EARLIER REVISION DATES

REVISION DATES: 9/5/13 3/18/14 5/28/14

SHEET 13 OF 30

FILE => 21-0113-f-abut_det07.dgn

USERNAME => s126530 DATE PLOTTED => 09-JUL-2014 TIME PLOTTED => 08:23

DIST	COUNTY	ROUTE	POST MILES TOTAL PROJECT	SHEET No.	TOTAL SHEETS
04	Nap	29	47.0/47.2	113	146

Mary K Beall 3/15/14
REGISTERED CIVIL ENGINEER DATE

June 23, 2014
PLANS APPROVAL DATE

REGISTERED PROFESSIONAL ENGINEER
MARY K. BEALL
No. C76357
Exp. 12/31/14
CIVIL
STATE OF CALIFORNIA

The State of California or its officers or agents shall not be responsible for the accuracy or completeness of scanned copies of this plan sheet.

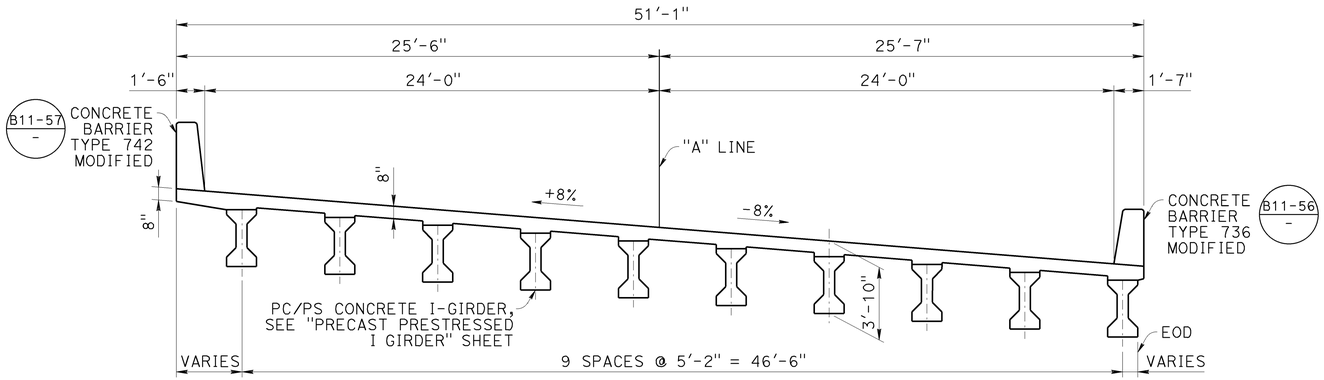

TYPICAL SECTION
1/4"=1'-0"

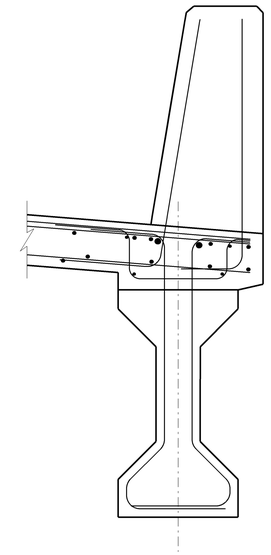

DETAIL A
1"=1'-0"

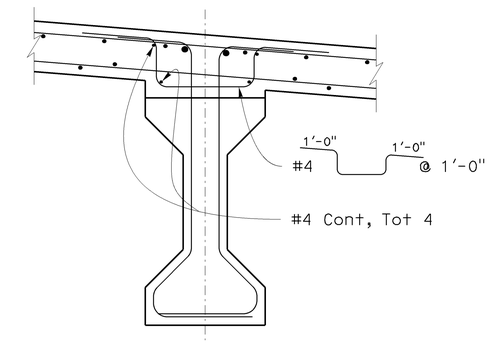

HAUNCH DETAIL
1"=1'-0"

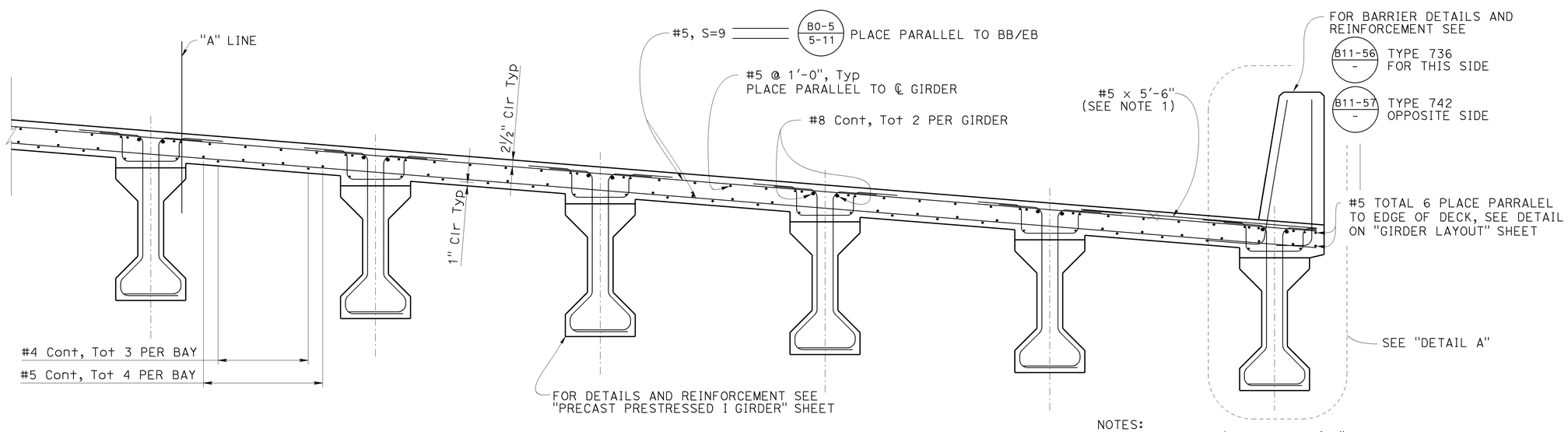

PART TYPICAL SECTION
3/4"=1'-0"

NOTES:
1. Place for a distance of 5'-0" at the ends of barrier rail in South side of bridge overhang and place the whole length of bridge in North side of bridge overhang. Bundle vertically with alternating top deck reinforcing bar in overhang.

Note:
The contractor shall verify all controlling field dimensions before ordering or fabricating any material.

	BY	CHECKED
DESIGN	Nora Kyo	Mary Beall
DETAILS	E. Hallstrom	Mary Beall
QUANTITIES	Nora Kyo	E. Hallstrom/M. Beall

STATE OF CALIFORNIA
DEPARTMENT OF TRANSPORTATION

DIVISION OF ENGINEERING SERVICES
STRUCTURE DESIGN
DESIGN BRANCH 8

BRIDGE NO. 21-0113
POST MILE 47.13

TROUTDALE CREEK BRIDGE (REPLACEMENT)
TYPICAL SECTION

STRUCTURES DESIGN DETAIL SHEET (ENGLISH) (REV. 09-01-10)

ORIGINAL SCALE IN INCHES FOR REDUCED PLANS 0 1 2 3

UNIT: 3593
PROJECT NUMBER & PHASE: 04000011041
CONTRACT NO.: 04-4A0901

DISREGARD PRINTS BEARING EARLIER REVISION DATES

REVISION DATES: 6/26/13 10/17/13 01/27/14 3/15/14

SHEET 14 OF 30

FILE => 21-0113-k_01ts.dgn

USERNAME => s128530 DATE PLOTTED => 09-JUL-2014 TIME PLOTTED => 08:27

DIST	COUNTY	ROUTE	POST MILES TOTAL PROJECT	SHEET No.	TOTAL SHEETS
04	Nap	29	47.0/47.2	114	146

Mary K Beall 3/15/14
REGISTERED CIVIL ENGINEER DATE

June 23, 2014
PLANS APPROVAL DATE

REGISTERED PROFESSIONAL ENGINEER
MARY K. BEALL
No. C76357
Exp. 12/31/14
CIVIL
STATE OF CALIFORNIA

The State of California or its officers or agents shall not be responsible for the accuracy or completeness of scanned copies of this plan sheet.

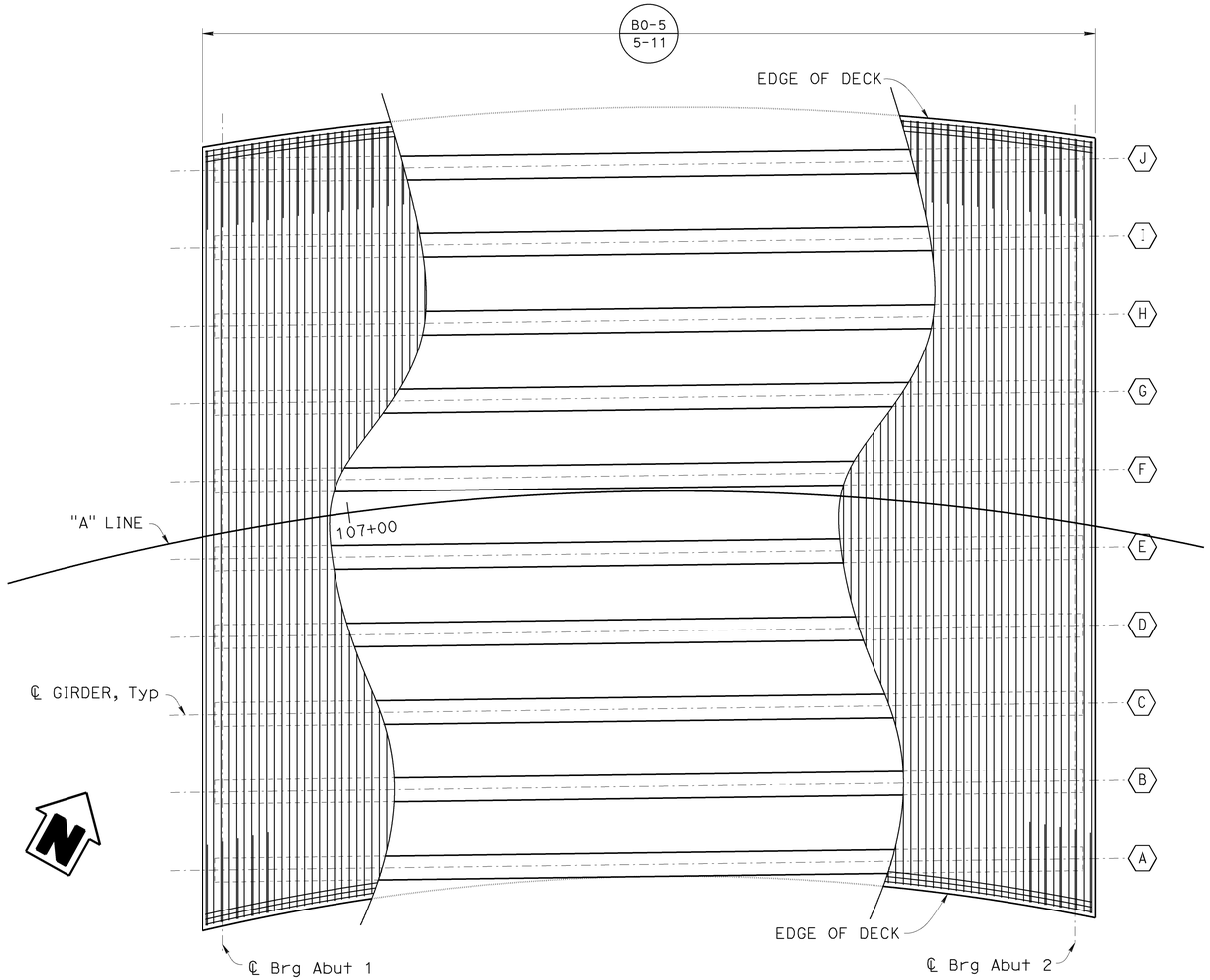

GIRDER LAYOUT
1"=5'-0"

NOTES:

1. All deck reinforcement not shown for clarity, see "TYPICAL SECTION" sheet for additional information.
2. For girder information not shown, see "PRECAST PRESTRESSED I GIRDER" sheet

Note:
The contractor shall verify all controlling field dimensions before ordering or fabricating any material.

	BY	CHECKED
DESIGN	Nora Kyo	Mary Beall
DETAILS	E. Hallstrom	Mary Beall
QUANTITIES	Nora Kyo	E. Hallstrom/M. Beall

STATE OF CALIFORNIA
DEPARTMENT OF TRANSPORTATION

DIVISION OF ENGINEERING SERVICES
STRUCTURE DESIGN
DESIGN BRANCH 8

BRIDGE NO. 21-0113
POST MILE 47.13

TROUTDALE CREEK BRIDGE (REPLACEMENT)
GIRDER LAYOUT

STRUCTURES DESIGN DETAIL SHEET (ENGLISH) (REV. 09-01-10)

ORIGINAL SCALE IN INCHES FOR REDUCED PLANS 0 1 2 3

UNIT: 3593
PROJECT NUMBER & PHASE: 04000011041
CONTRACT NO.: 04-4A0901

DISREGARD PRINTS BEARING EARLIER REVISION DATES

REVISION DATES: 6/28/13 10/17/13 3/14/15

SHEET 15 OF 30

FILE => 21-0113-k-_02-glo.dgn

USERNAME => s128530 DATE PLOTTED => 09-JUL-2014 TIME PLOTTED => 08:29

DIST	COUNTY	ROUTE	POST MILES TOTAL PROJECT	SHEET No.	TOTAL SHEETS
04	Nap	29	47.0/47.2	115	146

Mary K Beall 3/15/14
REGISTERED CIVIL ENGINEER DATE

June 23, 2014
PLANS APPROVAL DATE

REGISTERED PROFESSIONAL ENGINEER MARY K. BEALL No. C76357 Exp. 12/31/14 CIVIL STATE OF CALIFORNIA

The State of California or its officers or agents shall not be responsible for the accuracy or completeness of electronic copies of this plan sheet.

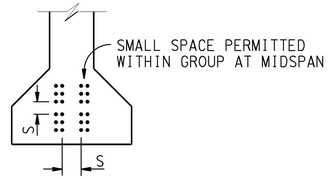

CLEARANCES FOR PRETENSIONED STRANDS

1. Strands may be bundled in groups consisting of 3 vertically, 2 horizontally and separated at the ends
2. The Min distance "S" between groups or individual strands is 1½" for ⅜" ø strands, 1¾" for ½" ø strands, 2" for 0.6" ø strands
3. "S" is measured between centers of adjacent strands
4. Approval by the Engineer is required for deviation

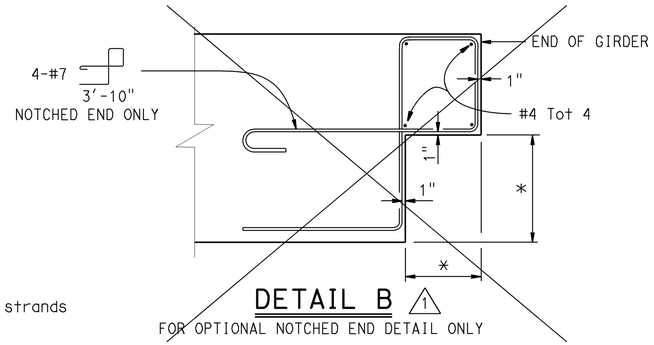

DETAIL B 1

FOR OPTIONAL NOTCHED END DETAIL ONLY

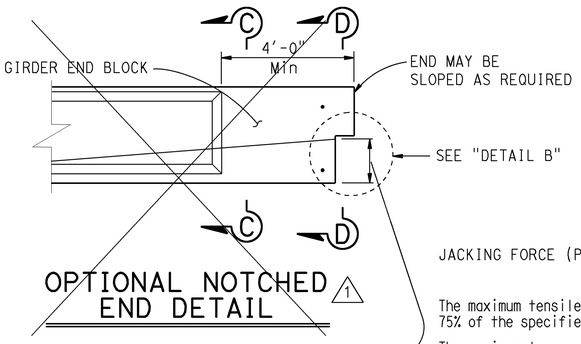

OPTIONAL NOTCHED END DETAIL 1

GENERAL NOTES

JACKING FORCE (P): The jacking force required at the point of control along the span. The jacking force does not include any fabrication specific losses.

The maximum tensile stress in the prestressing steel upon release shall not exceed 75% of the specified minimum ultimate tensile strength of the prestressing steel.

The maximum temporary tensile stress (jacking stress) in the prestressing steel shall not exceed 80% of the specified minimum ultimate tensile strength of the prestressing steel.

CONCRETE STRENGTH: f'ci is at time of initial stressing
f'c is at 28 days

DEFLECTION COMPONENTS: Informational - to be used in setting screed line elevations

Screed line elevations for deck concrete will be determined by the Engineer.

Contractor may interpolate "P" and "X" values between limits shown, as approved by the Engineer.

Use epoxy coated reinforcement in Environmental Area III

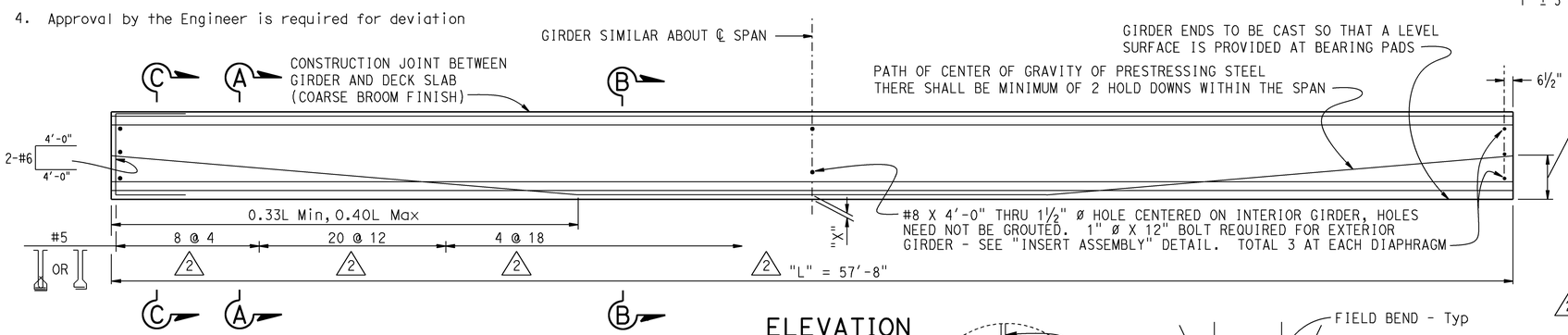

ELEVATION

Girder location or designation and length	Jacking Force (P) (Kips) "X"		"Y" (in)	Concrete Strength (ksi) f'ci	Concrete Strength (ksi) f'c	Midspan Dead Load Deflection (inches) Deck	Midspan Dead Load Deflection (inches) Rail
2 58'-0"	4"	450	12	5	6	0.51	0.04
	6"	480					
A 58'-0"	4"	400	12	5	6	0.35	0.04
	6"	400					

For location of A, see "GIRDER LAYOUT" sheet.

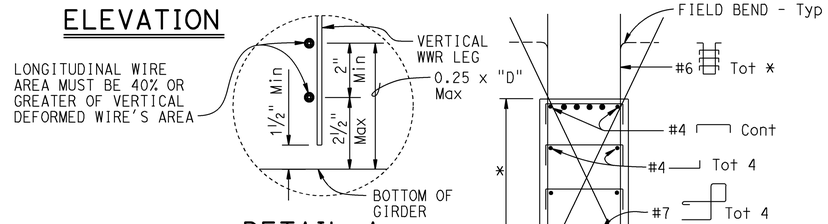

DETAIL A

SECTION D-D 1

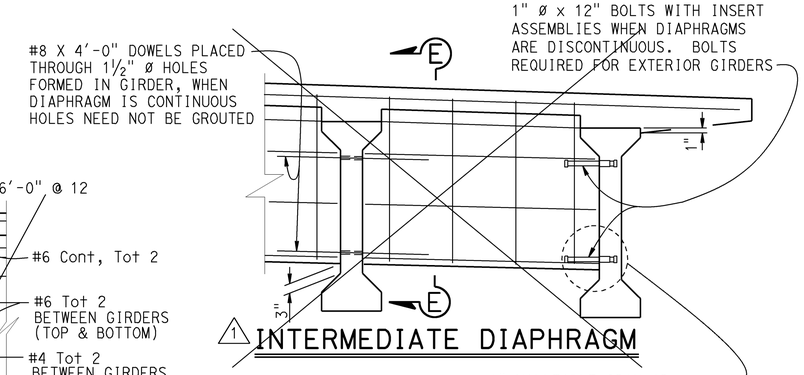

1 INTERMEDIATE DIAPHRAGM

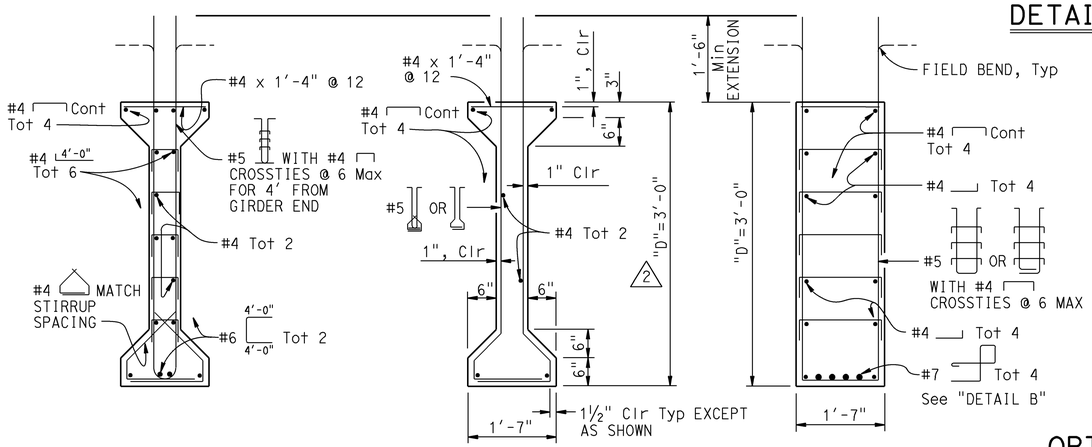

SECTION A-A

SECTION B-B

SECTION C-C

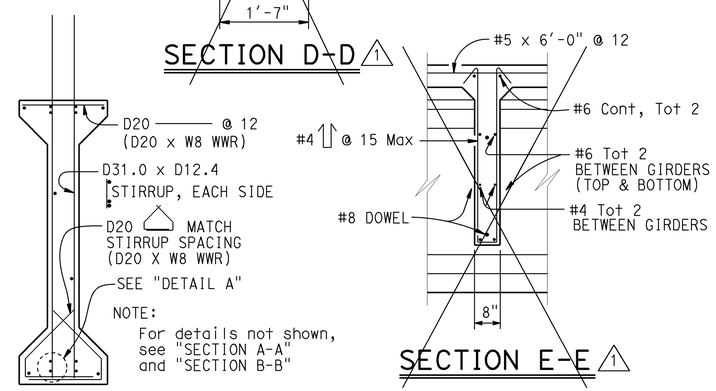

OPTIONAL WELDED WIRE REINFORCEMENT (WWR) DETAIL

SECTION E-E 1

WWR NOTE: MANUFACTURER'S SHOP DRAWING SHALL CONFORM TO THE REINFORCEMENT SHOWN ON THIS SHEET AS NOTED AND THE SPECIAL PROVISIONS

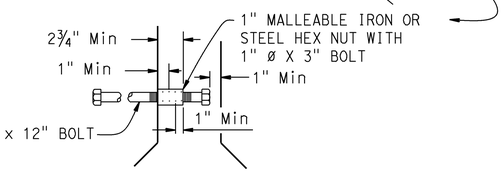

INSERT ASSEMBLY

NO SCALE

REVISED STANDARD DRAWING

FILE NO. XS1-120

APPROVAL DATE July 2011

1 DETAIL REMOVED
2 INFORMATION ADDED

STATE OF CALIFORNIA
DEPARTMENT OF TRANSPORTATION

DIVISION OF ENGINEERING SERVICES

BRIDGE NO. 21-0113
POST MILE 47.13

TROUTDALE CREEK BRIDGE (REPLACEMENT)
PRECAST PRESTRESSED I GIRDER

DS OSD 2147A (ENGLISH STANDARD DRAWING "XS" BORDER REV. (02-02-11)

ORIGINAL SCALE IN INCHES FOR REDUCED PLANS 0 1 2 3

UNIT: 3593
PROJECT NUMBER & PHASE: 04000011041
CONTRACT NO.: 04-4A0901

DISREGARD PRINTS BEARING EARLIER REVISION DATES

REVISION DATES: 7/30/13 10/17/13 3/15/14

SHEET 16 OF 30

FILE => 21-0113-I-xs-1-120.dgn

USERNAME => s128530 DATE PLOTTED => 09-JUL-2014 TIME PLOTTED => 08:31

DIST	COUNTY	ROUTE	POST MILES TOTAL PROJECT	SHEET No.	TOTAL SHEETS
04	Nap	29	47.0/47.2	116	146

Mary K Beall 3/15/14
REGISTERED CIVIL ENGINEER DATE

June 23, 2014
PLANS APPROVAL DATE

REGISTERED PROFESSIONAL ENGINEER MARY K. BEALL No. C76357 Exp. 12/31/14 CIVIL STATE OF CALIFORNIA

The State of California or its officers or agents shall not be responsible for the accuracy or completeness of electronic copies of this plan sheet.

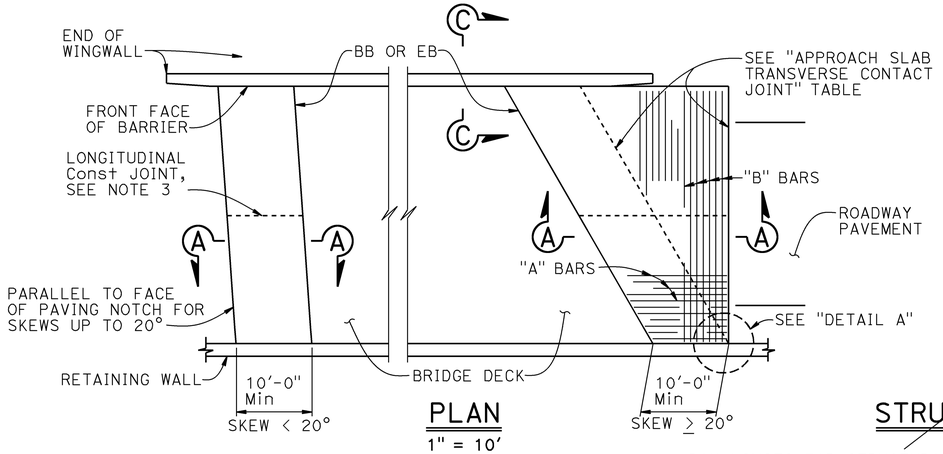

PLAN
1" = 10'

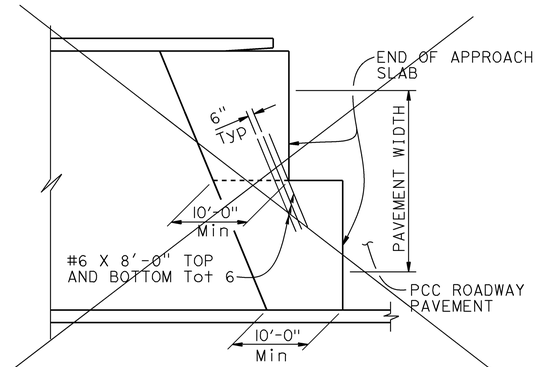

STRUCTURE APPROACH - END STAGGER DETAIL 1
NO SCALE

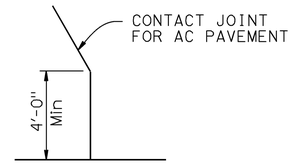

DETAIL A
No Scale

APPROACH SLAB TRANSVERSE CONTACT JOINT		
APPROACH SKEW	AC ROADWAY PAVEMENT	WITH PCC ROADWAY PAVEMENT
< 20°	PARALLEL TO FACE OF PN	PARALLEL TO FACE OF PN
20° - 45°	PARALLEL TO FACE OF PN USE "DETAIL A"	STAGGER LINES 24' TO 36' APART
> 45°	PARALLEL TO FACE OF PN USE "DETAIL A"	STAGGER AT EACH LANE LINE

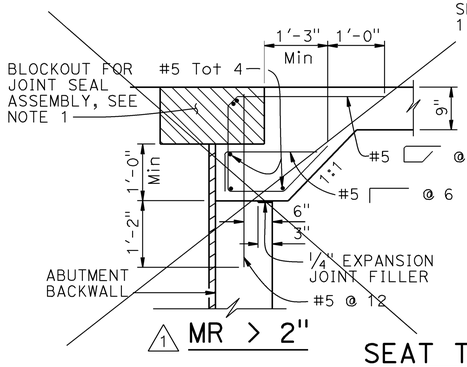

1 MR > 2"

SEAT TYPE ABUTMENT SECTION A-A
3/4" = 1'-0"

NOTE: Seat type abutment shown, for diaphragm type abutment, see "ABUTMENT TIE DETAILS"

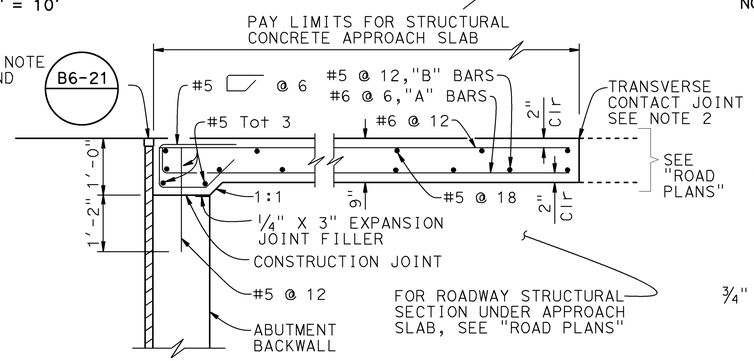

MR ≤ 2"

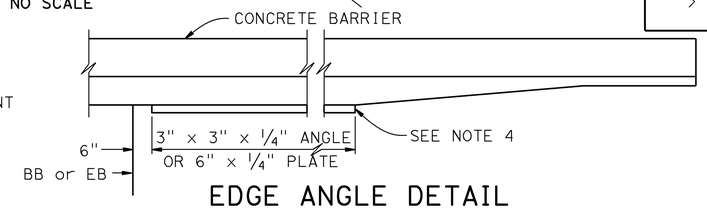

EDGE ANGLE DETAIL
1/2" = 1'-0"

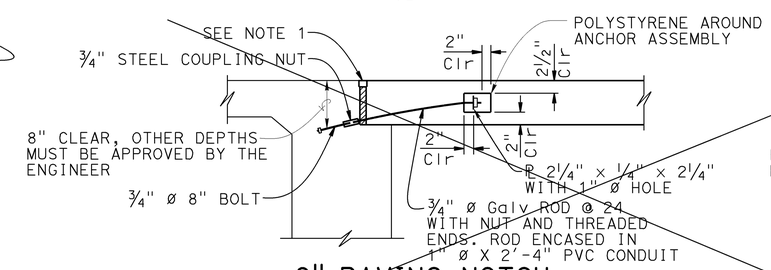

9" PAVING NOTCH

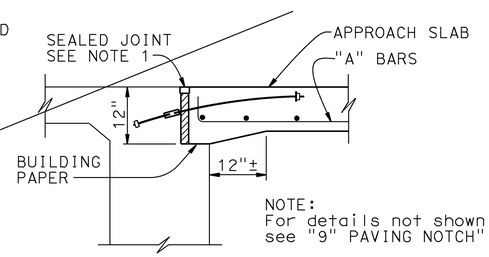

NOTE:
For details not shown, see "9" PAVING NOTCH"

12" PAVING NOTCH

DIAPHRAGM TYPE ABUTMENT ABUTMENT TIE DETAILS 1
3/4" = 1'-0"

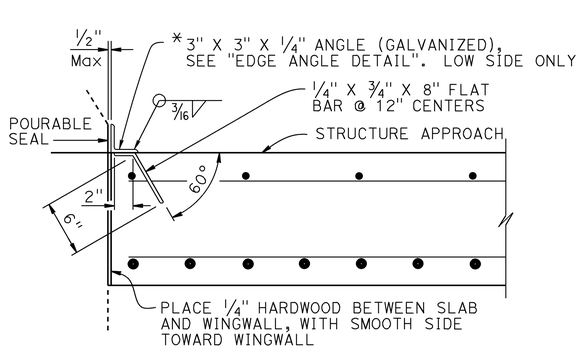

*(TO BE USED WITH CONCRETE BARRIER WITH VERTICAL FACE)

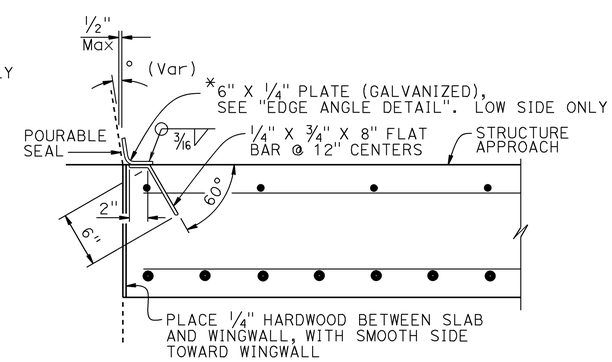

*(TO BE USED WITH CONCRETE BARRIER WITH SLOPING FACE)

DETAIL B
1 1/2" = 1'-0"

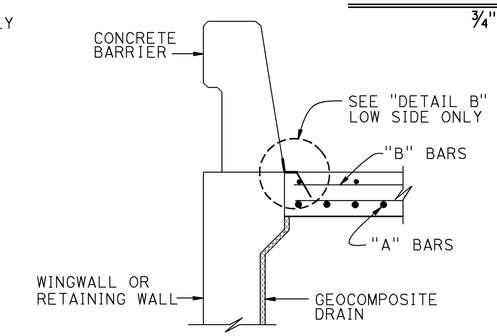

SECTION C-C
3/4" = 1'-0"

NOTES:

1. For details not noted or shown, see Structure Plans. Adjust bar reinforcement to clear a sawcut for sealed joint, when required
2. For transverse contact joint with new PCC paving, refer to Standard Plan P10
3. Longitudinal construction joints, when permitted by the Engineer, shall be located on lane lines
4. End angle or plate at beginning of barrier transition, end of wingwall or end of structure approach as applicable
5. At the Contractor's option, approach slab transverse reinforcement may be placed parallel to paving notch. Spacing of transverse reinforcement is measured along ℄ roadway
6. For drainage details, see Structure Plans.

STANDARD DRAWING
FILE NO. xs3-160
APPROVAL DATE July 2011

1 NOTE OR DETAIL DELETED

STATE OF CALIFORNIA
DEPARTMENT OF TRANSPORTATION

DIVISION OF ENGINEERING SERVICES

BRIDGE NO. 21-0113
POST MILE

TROUTDALE CREEK BRIDGE (REPLACEMENT)
STRUCTURE APPROACH TYPE EQ(10)

DS OSD 2147A (ENGLISH STANDARD DRAWING "XS" BORDER REV. (02-02-11)

ORIGINAL SCALE IN INCHES FOR REDUCED PLANS 0 1 2 3

UNIT: 3593
PROJECT NUMBER & PHASE: 04000011041
CONTRACT NO.: 04-4A0901

DISREGARD PRINTS BEARING EARLIER REVISION DATES 3/15/14

REVISION DATES | SHEET 17 | OF 30

FILE => 21-0113-1-xs-3-160.dgn

USERNAME => s128530 DATE PLOTTED => 09-JUL-2014 TIME PLOTTED => 08:36

DIST	COUNTY	ROUTE	POST MILES TOTAL PROJECT	SHEET No.	TOTAL SHEETS
04	Nap	29	47.0/47.2	117	146

Mary K Beall 3/15/14
REGISTERED CIVIL ENGINEER DATE

June 23, 2014
PLANS APPROVAL DATE

REGISTERED PROFESSIONAL ENGINEER
MARY K. BEALL
No. C76357
Exp. 12/31/14
CIVIL
STATE OF CALIFORNIA

The State of California or its officers or agents shall not be responsible for the accuracy or completeness of electronic copies of this plan sheet.

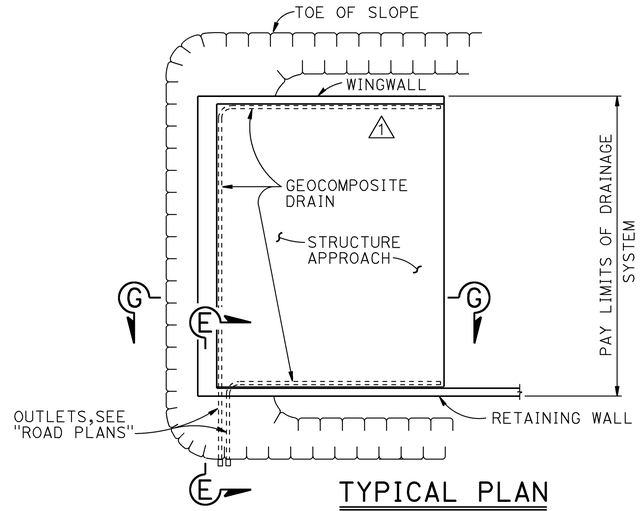

TYPICAL PLAN

1" = 10'

* FOR PIPE LAYOUT AT STAGGERED END, SEE "DETAIL B"

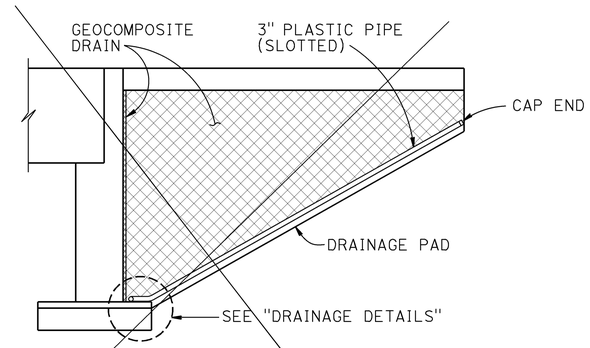

CANTILEVER WINGWALL

1 SECTION F-F

¼" = 1'-0"

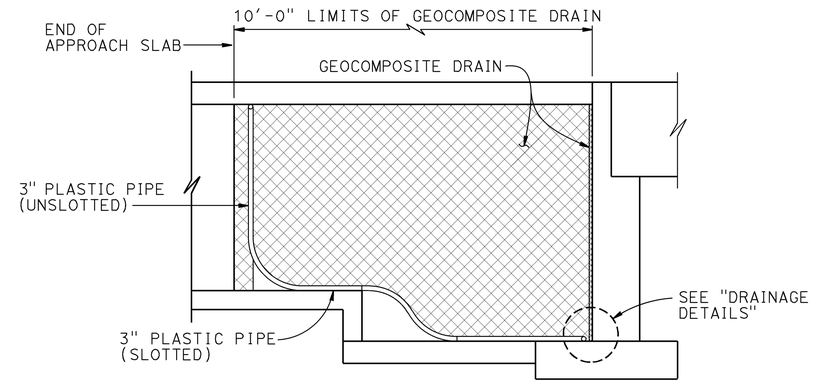

RETAINING WALL WINGWALL DRAINAGE DETAILS

SECTION G-G

¼" = 1'-0"

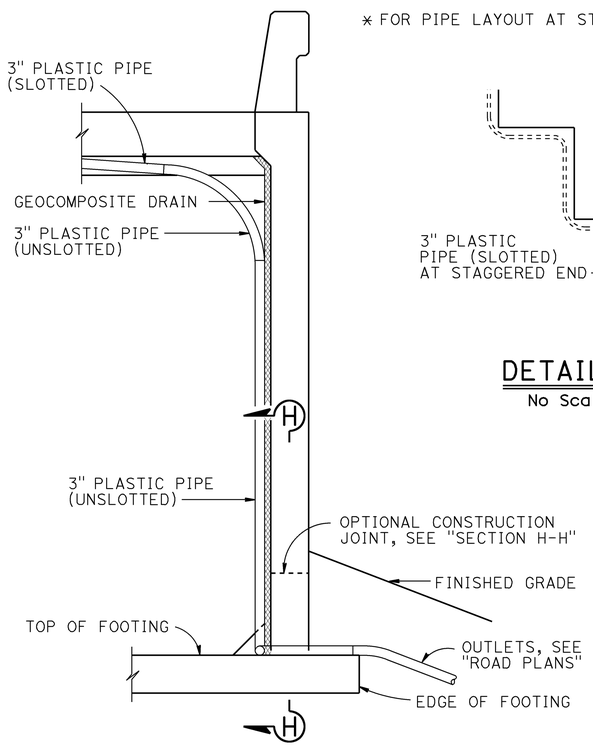

SECTION E-E

½" = 1'-0"

NOTE: Bends and junctions in 3" plastic pipe are 30" radius Min

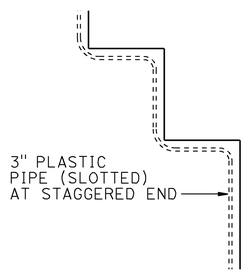

DETAIL B

No Scale

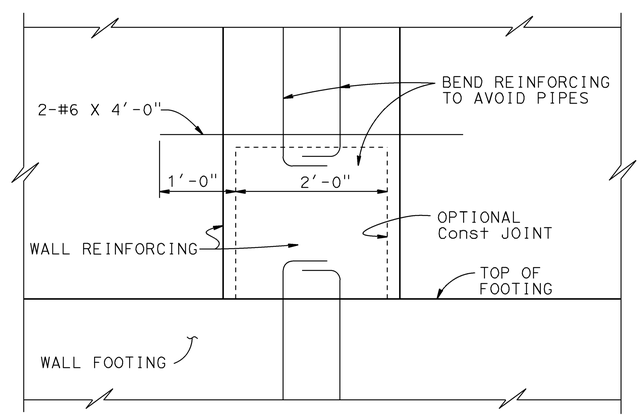

SECTION H-H

1" = 1'-0"

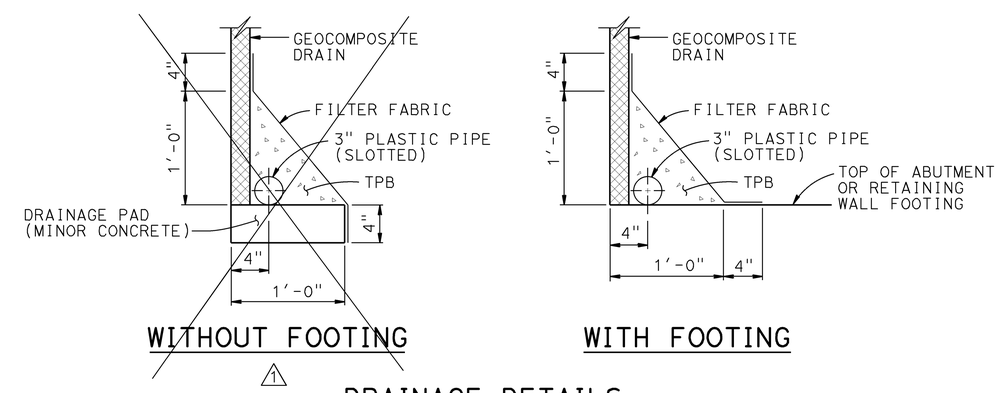

WITHOUT FOOTING

1

WITH FOOTING

DRAINAGE DETAILS

1½" = 1'-0"

REVISED STANDARD DRAWING

FILE NO. xs3-110

APPROVAL DATE July 2011

1 NOTE OR DETAIL DELETED

STATE OF CALIFORNIA
DEPARTMENT OF TRANSPORTATION

DIVISION OF ENGINEERING SERVICES

BRIDGE NO. 21-0113
POST MILE 47.13

TROUTDALE CREEK BRIDGE (REPLACEMENT)

STRUCTURE DRAINAGE DETAILS

DS OSD 2147A (ENGLISH STANDARD DRAWING "XS" BORDER REV. (02-02-11)

ORIGINAL SCALE IN INCHES FOR REDUCED PLANS 0 1 2 3

UNIT: 3593
PROJECT NUMBER & PHASE: 04000011041
CONTRACT NO.: 04-4A0901

DISREGARD PRINTS BEARING EARLIER REVISION DATES

REVISION DATES 8/14/13 10/17/13 3/15/14

SHEET 18 OF 30

FILE => 21-0113-s-sadd.dgn

USERNAME => s128530 DATE PLOTTED => 09-JUL-2014 TIME PLOTTED => 08:38

DIST	COUNTY	ROUTE	POST MILES TOTAL PROJECT	SHEET No.	TOTAL SHEETS
04	Nap	29	47.0/47.2	118	146

Mary K Beall 5/28/14
REGISTERED CIVIL ENGINEER DATE

June 23, 2014
PLANS APPROVAL DATE

REGISTERED PROFESSIONAL ENGINEER
MARY K. BEALL
No. C76357
Exp. 12/31/14
CIVIL
STATE OF CALIFORNIA

The State of California or its officers or agents shall not be responsible for the accuracy or completeness of scanned copies of this plan sheet.

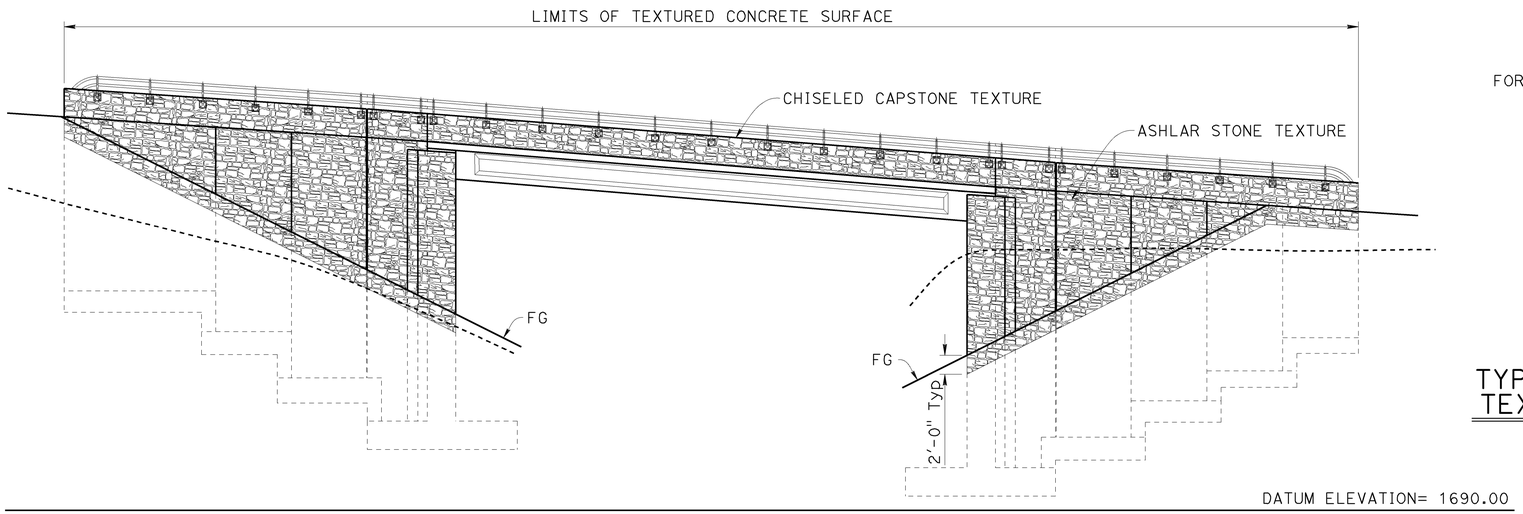

DEVELOPED MIRRORED ELEVATION
1/8"=1'-0"

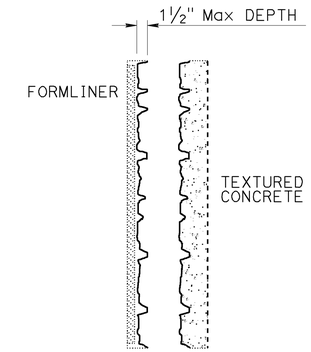

TYPICAL SECTION AT TEXTURED CONCRETE
No Scale

NOTES:

1. Stone pattern on barrier shall be constructed continuous with stone pattern at treated walls below.
2. Prepare and stain concrete, see "ROAD PLANS".
3. Apply anti-graffiti coating, see "ROAD PLANS".
4. For details not shown see RSP A7704 -
5. Architectural treatment in addition to Type 742A (Mod) and 736A (Mod) barrier and retaining wall/wingwall shapes.

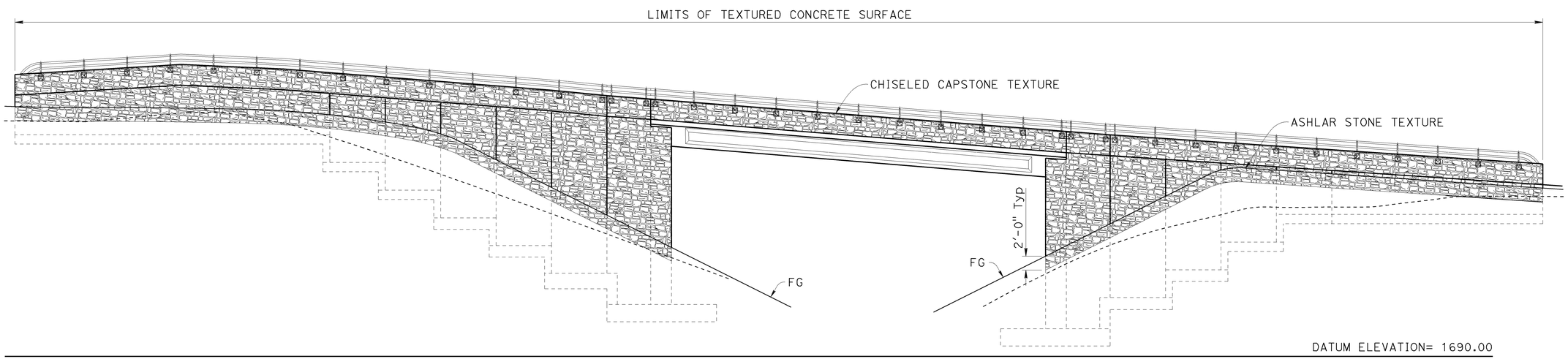

DEVELOPED ELEVATION
1/8"=1'-0"

DESIGN	BY Valerie Moore	CHECKED Mary Beall	
DETAILS	BY Carlo Cancino	CHECKED Mary Beall	
QUANTITIES	BY Nora Kyo	CHECKED E. Hallstrom/M. Beall	

STATE OF CALIFORNIA
DEPARTMENT OF TRANSPORTATION

DIVISION OF ENGINEERING SERVICES
STRUCTURE DESIGN
DESIGN BRANCH 8

BRIDGE NO. 21-0113
POST MILE 47.13

TROUTDALE CREEK BRIDGE (REPLACEMENT)
ARCHITECTURAL TREATMENT DETAILS No. 1

STRUCTURES DESIGN DETAIL SHEET (ENGLISH) (REV. 09-01-10)

ORIGINAL SCALE IN INCHES FOR REDUCED PLANS 0 1 2 3

UNIT: 3593
PROJECT NUMBER & PHASE: 04000011041
CONTRACT NO.: 04-4A0901

DISREGARD PRINTS BEARING EARLIER REVISION DATES

REVISION DATES 10/17/13 3/18/14 5/28/14

SHEET 19 OF 30

FILE => 21-0113-u-archtr_ad1.dgn

USERNAME => s128530 DATE PLOTTED => 09-JUL-2014 TIME PLOTTED => 08:40

DIST	COUNTY	ROUTE	POST MILES TOTAL PROJECT	SHEET No.	TOTAL SHEETS
04	Nap	29	47.0/47.2	119	146

Mary K Beall 5/28/14
REGISTERED CIVIL ENGINEER DATE

June 23, 2014
PLANS APPROVAL DATE

REGISTERED PROFESSIONAL ENGINEER
MARY K. BEALL
No. C76357
Exp. 12/31/14
CIVIL
STATE OF CALIFORNIA

The State of California or its officers or agents shall not be responsible for the accuracy or completeness of scanned copies of this plan sheet.

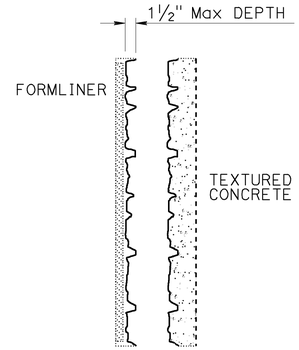

TYPICAL SECTION AT TEXTURED CONCRETE

No Scale

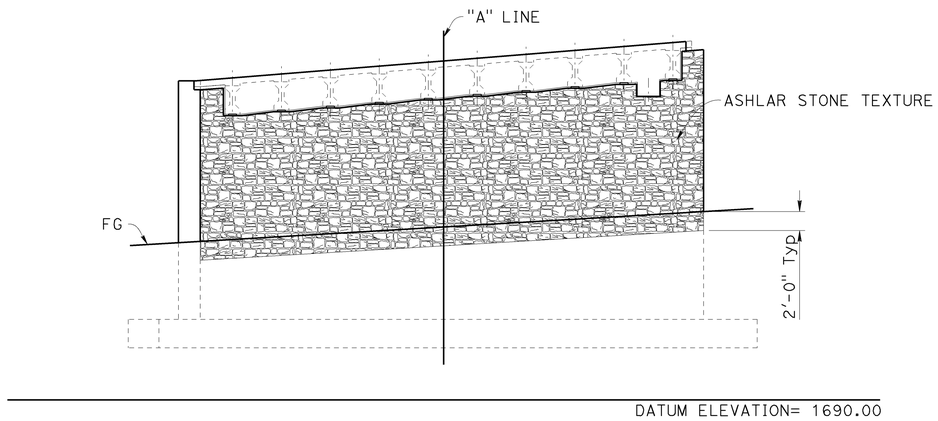

ABUT 1 ELEVATION

⅛"=1'-0"

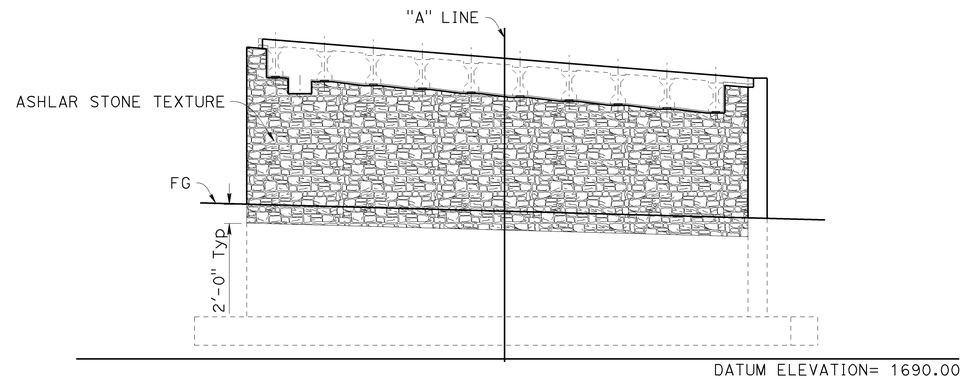

ABUT 2 ELEVATION

⅛"=1'-0"

NOTES:

1. Stone pattern on barrier shall be constructed continuous with stone pattern at treated walls below.
2. Prepare and stain concrete, see "ROAD PLANS".
3. Apply anti-graffiti coating, see "ROAD PLANS".
4. For details not shown see RSP A7704 -
5. Architectural treatment in addition to Abutment and retaining wall/wingwall shapes.

	BY	CHECKED
DESIGN	Valerie Moore	Mary Beall
DETAILS	Carlo Cancino	Mary Beall
QUANTITIES	Nora Kyo	E. Hallstrom/M. Beall

STATE OF CALIFORNIA
DEPARTMENT OF TRANSPORTATION

DIVISION OF ENGINEERING SERVICES
STRUCTURE DESIGN
DESIGN BRANCH 8

BRIDGE NO. 21-0113
POST MILE 47.13

TROUTDALE CREEK BRIDGE (REPLACEMENT)

ARCHITECTURAL TREATMENT DETAILS No.2

STRUCTURES DESIGN DETAIL SHEET (ENGLISH) (REV. 09-01-10)

ORIGINAL SCALE IN INCHES FOR REDUCED PLANS 0 1 2 3

UNIT: 3593
PROJECT NUMBER & PHASE: 04000011041
CONTRACT NO.: 04-4A0901

DISREGARD PRINTS BEARING EARLIER REVISION DATES

REVISION DATES: 10/17/13 3/18/14 5/28/14

SHEET 20 OF 30

FILE => 21-0113-u-archtr_ad2.dgn

USERNAME => s128530 DATE PLOTTED => 09-JUL-2014 TIME PLOTTED => 08:56

DIST	COUNTY	ROUTE	POST MILES TOTAL PROJECT	SHEET No.	TOTAL SHEETS
04	Nap	29	47.0/47.2	120	146

Mary K Beall 5/28/14
REGISTERED CIVIL ENGINEER DATE

June 23, 2014
PLANS APPROVAL DATE

REGISTERED PROFESSIONAL ENGINEER
MARY K. BEALL
No. C76357
Exp. 12/31/14
CIVIL
STATE OF CALIFORNIA

The State of California or its officers or agents shall not be responsible for the accuracy or completeness of scanned copies of this plan sheet.

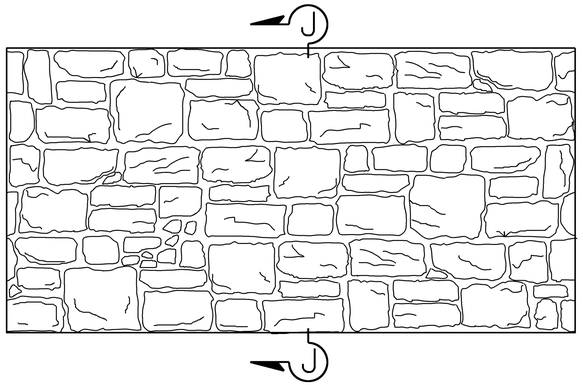

ASHLAR STONE TEXTURE
No Scale

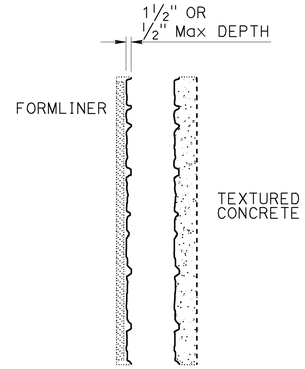

SECTION J-J
No Scale

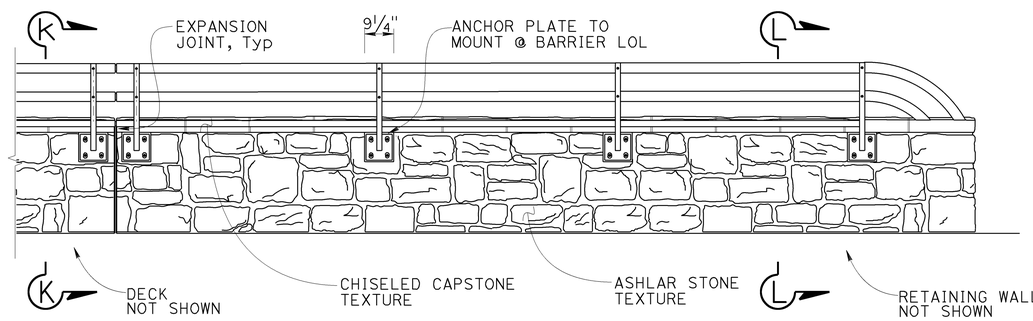

TYPE 736 (Mod) - TYPICAL ELEVATION (BACK)
No Scale

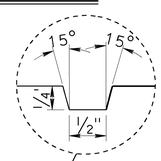

*½" WIDE X ¼" DEEP GROOVE WITH BEVELED EDGES. 20" SPACING BETWEEN GROOVES. GROOVES CONTINUE ACROSS TOP OF BARRIER CONNECTING TO OPPOSING GROOVE

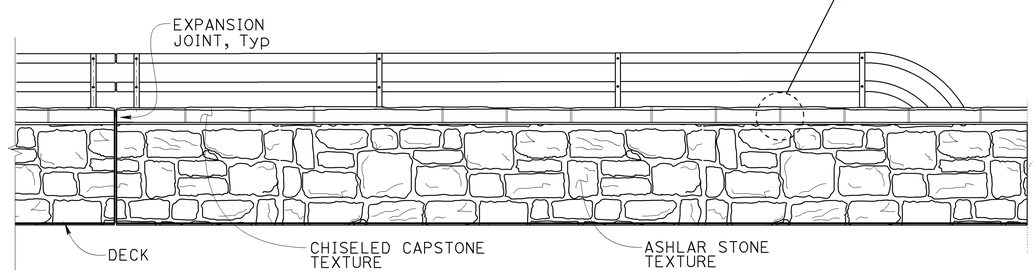

TYPE 736 (Mod)- TYPICAL ELEVATION (FRONT OR TRAVELWAY)
No Scale

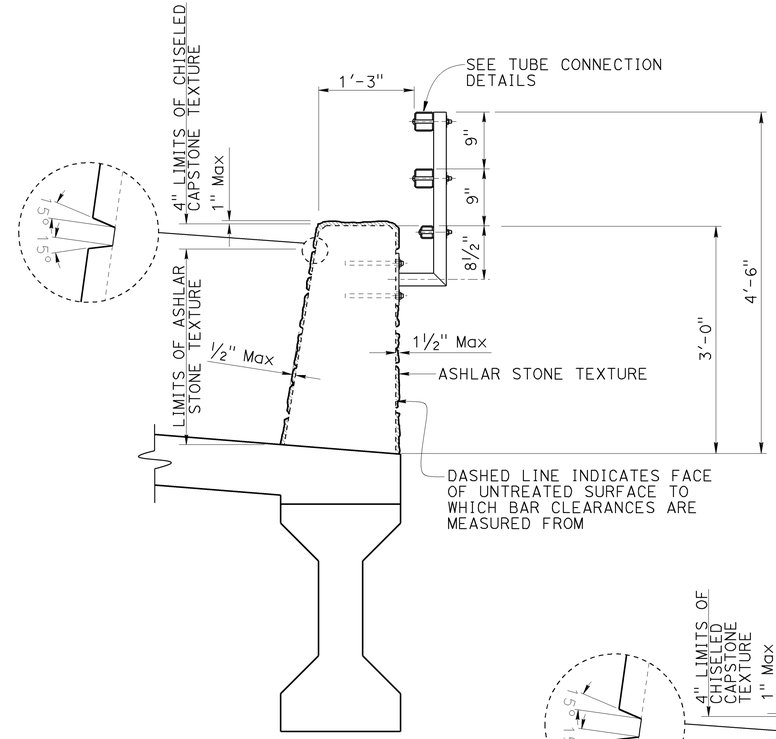

SECTION K-K TYPE 736 (Mod)
SECTION AT DECK
No Scale

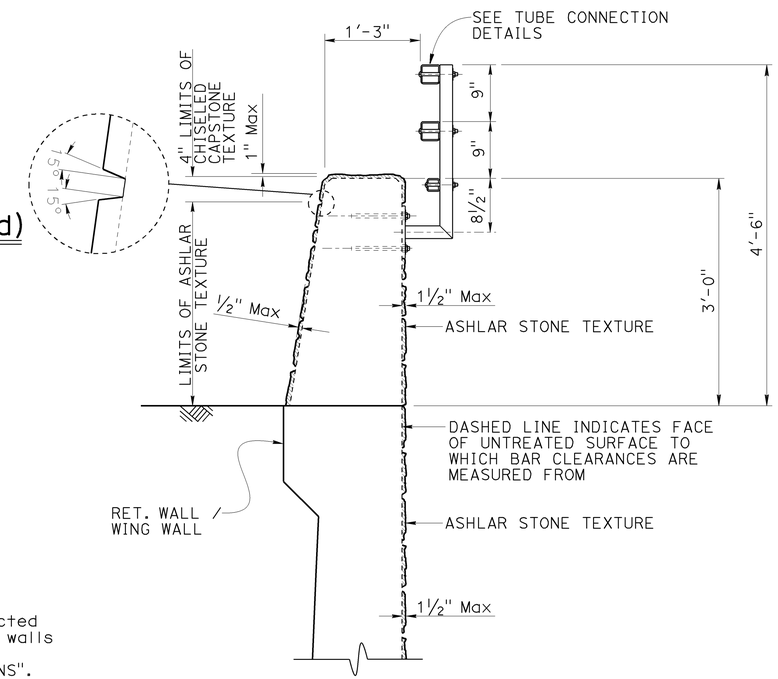

SECTION L-L TYPE 736A (Mod)
SECTION AT RETAINING WALL
No Scale

NOTES:

1. Stone pattern on barrier shall be constructed continuous with stone pattern at treated walls below.
2. Prepare and stain concrete, see "ROAD PLANS".
3. Apply anti-graffiti coating, see "ROAD PLANS".
4. For details not shown see RSP A7704 -
5. Architectural treatment in addition to Type 736A (Mod) barrier and retaining wall/wingwall shapes.

DESIGN	BY Valerie Moore	CHECKED Nora Kyo	
DETAILS	BY Carlo Cancino	CHECKED Nora Kyo	
QUANTITIES	BY Nora Kyo	CHECKED E. Hallstrom/M. Beall	

STATE OF CALIFORNIA
DEPARTMENT OF TRANSPORTATION

DIVISION OF ENGINEERING SERVICES
STRUCTURE DESIGN
DESIGN BRANCH 8

BRIDGE NO. 21-0113
POST MILE 47.13

TROUTDALE CREEK BRIDGE (REPLACEMENT)
ARCHITECTURAL TREATMENT DETAILS - TYPE 736 (Mod)

STRUCTURES DESIGN DETAIL SHEET (ENGLISH) (REV. 09-01-10)

ORIGINAL SCALE IN INCHES FOR REDUCED PLANS 0 1 2 3

UNIT: 3593
PROJECT NUMBER & PHASE: 04000011041
CONTRACT NO.: 04-4A0901

DISREGARD PRINTS BEARING EARLIER REVISION DATES

REVISION DATES: 8/14/13 5/28/14 3/18/14

SHEET 21 OF 30

FILE => 21-0113-u-archtr_ad3-736.dgn

USERNAME => s128530 DATE PLOTTED => 09-JUL-2014 TIME PLOTTED => 08:58

DIST	COUNTY	ROUTE	POST MILES TOTAL PROJECT	SHEET No.	TOTAL SHEETS
04	Nap	29	47.0/47.2	121	146

Mary K Beall 5/28/14
REGISTERED CIVIL ENGINEER DATE

June 23, 2014
PLANS APPROVAL DATE

REGISTERED PROFESSIONAL ENGINEER MARY K. BEALL No. C76357 Exp. 12/31/14 CIVIL STATE OF CALIFORNIA

The State of California or its officers or agents shall not be responsible for the accuracy or completeness of scanned copies of this plan sheet.

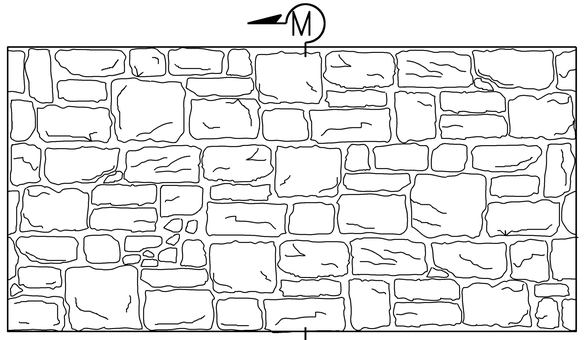

ASHLAR STONE TEXTURE
No Scale

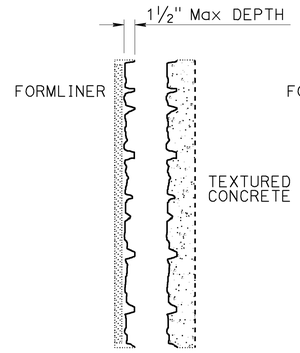

SECTION M-M
No Scale
(AT BACK FACE OF TYPE 742 BARRIER ONLY)

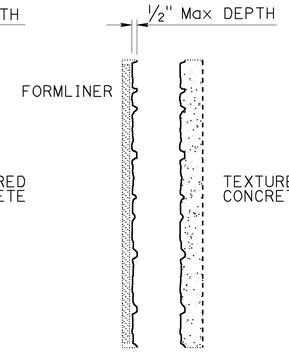

SECTION M-M
No Scale

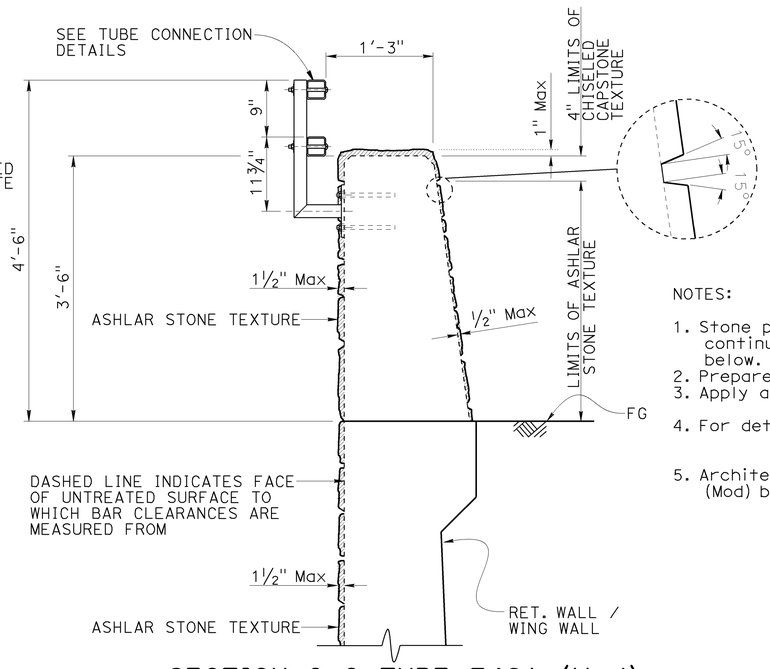

SECTION O-O TYPE 742A (Mod)
SECTION AT RETAINING WALL
No Scale

NOTES:

1. Stone pattern on barrier shall be constructed continuous with stone pattern at treated walls below.
2. Prepare and stain concrete, see "ROAD PLANS".
3. Apply anti-graffiti coating, see "ROAD PLANS".
4. For details not shown see RSP A7704 -
5. Architectural treatment in addition to Type 742 (Mod) barrier and retaining wall/wingwall shapes.

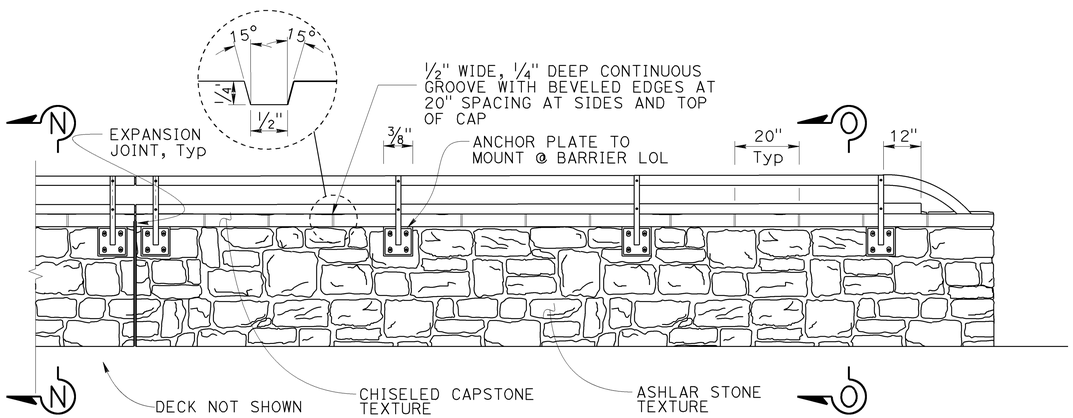

TYPE 742 (Mod) - TYPICAL ELEVATION (BACK)
No Scale

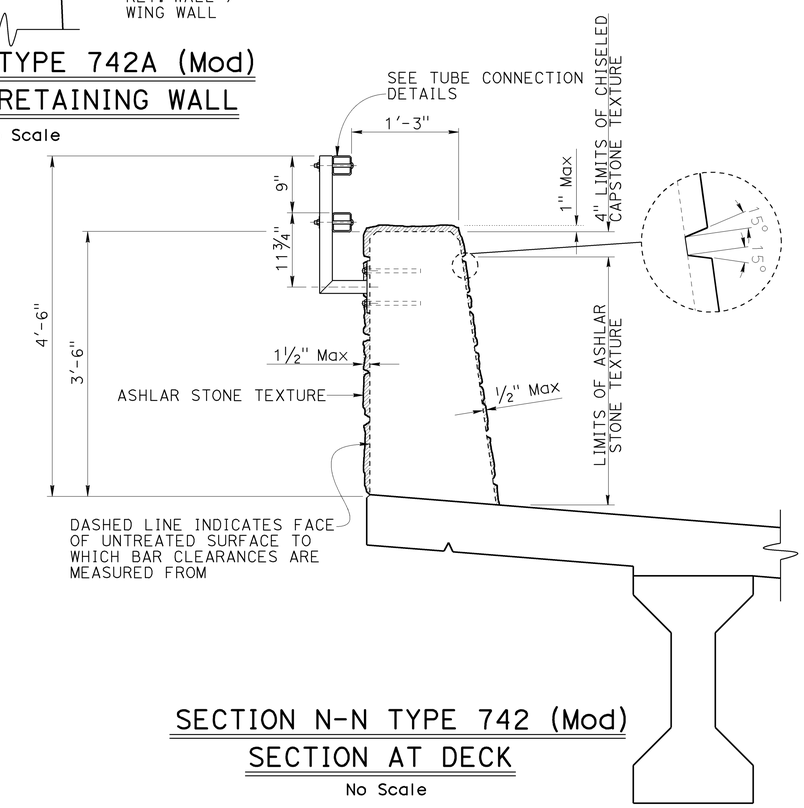

SECTION N-N TYPE 742 (Mod)
SECTION AT DECK
No Scale

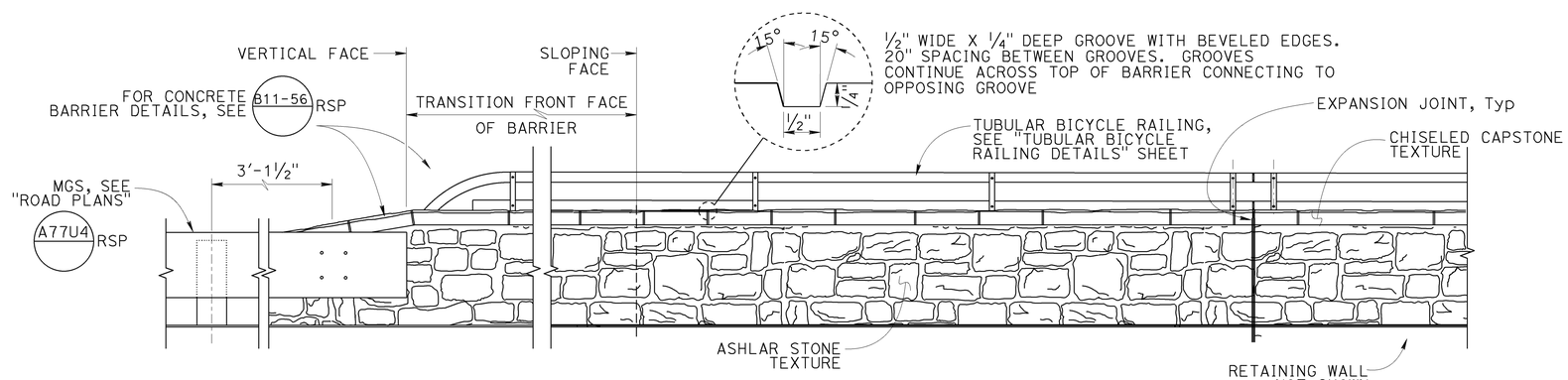

TYPE 742 (Mod) - TYPICAL ELEVATION (FRONT)
No Scale

DESIGN	BY Valerie Moore	CHECKED Nora Kyo	
DETAILS	BY Carlo Cancino	CHECKED Nora Kyo	
QUANTITIES	BY Nora Kyo	CHECKED E. Hallstrom/M. Beall	

STATE OF CALIFORNIA
DEPARTMENT OF TRANSPORTATION

DIVISION OF ENGINEERING SERVICES
STRUCTURE DESIGN
DESIGN BRANCH 8

BRIDGE NO. 21-0113
POST MILE 47.13

TROUTDALE CREEK BRIDGE (REPLACEMENT)
ARCHITECTURAL TREATMENT DETAILS - TYPE 742 (Mod)

STRUCTURES DESIGN DETAIL SHEET (ENGLISH) (REV. 09-01-10)

ORIGINAL SCALE IN INCHES FOR REDUCED PLANS 0 1 2 3

UNIT: 3593
PROJECT NUMBER & PHASE: 04000011041
CONTRACT NO.: 04-4A0901

DISREGARD PRINTS BEARING EARLIER REVISION DATES
REVISION DATES 8/14/13 5/28/14 3/18/14

SHEET 22 OF 30

FILE => 21-0113-u-archtr_ad4-742.dgn

USERNAME => s128530 DATE PLOTTED => 09-JUL-2014 TIME PLOTTED => 09:06

DIST	COUNTY	ROUTE	POST MILES TOTAL PROJECT	SHEET No.	TOTAL SHEETS
04	Nap	29	47.0/47.2	122	146

Mary K Beall 5/28/14
REGISTERED CIVIL ENGINEER DATE

June 23, 2014
PLANS APPROVAL DATE

REGISTERED PROFESSIONAL ENGINEER
MARY K. BEALL
No. C76357
Exp. 12/31/14
CIVIL
STATE OF CALIFORNIA

The State of California or its officers or agents shall not be responsible for the accuracy or completeness of scanned copies of this plan sheet.

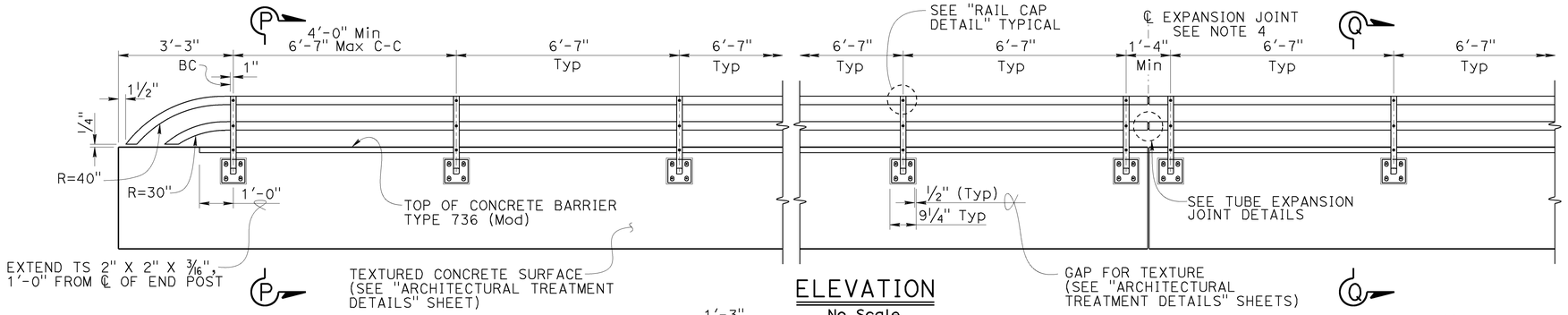

ELEVATION
No Scale

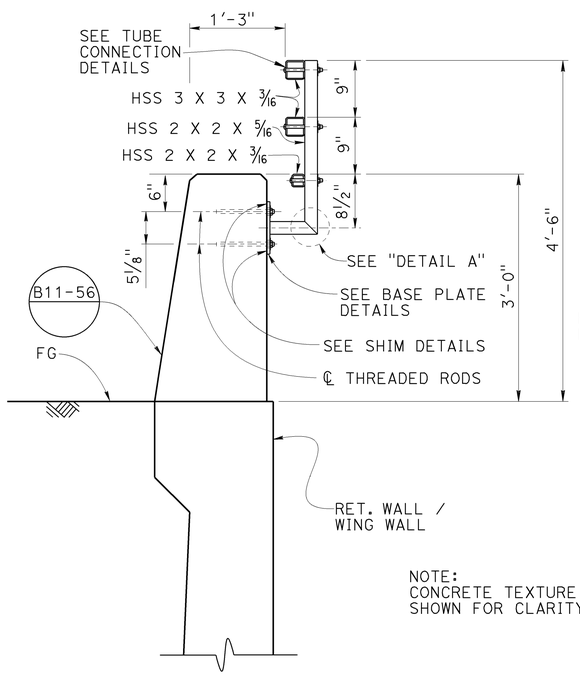

SECTION P-P AT RETAINING WALL

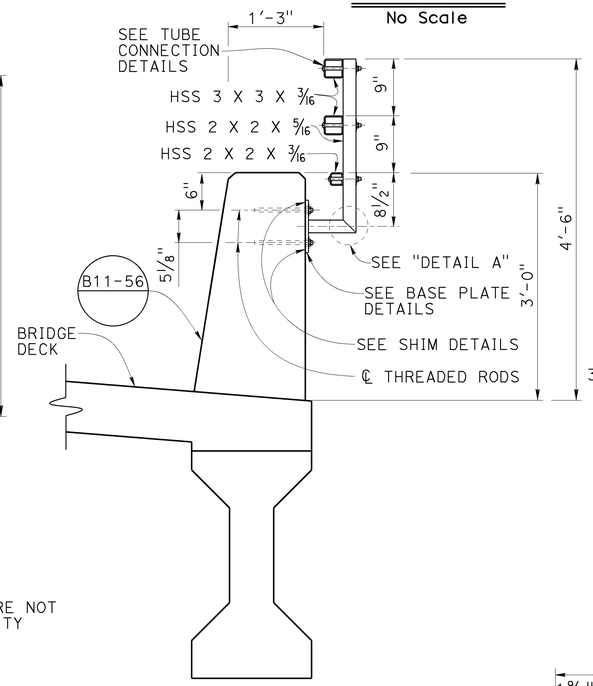

SECTION Q-Q AT BRIDGE DECK

TUBULAR BICYCLE RAILING ON BARRIER TYPE 736 (MOD)
No Scale

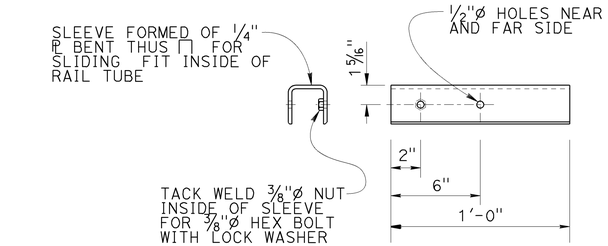

SLEEVE DETAIL
No Scale

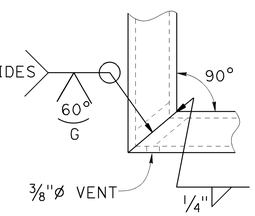

DETAIL A
No Scale

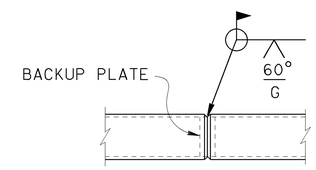

WELDED SPLICE DETAIL
No Scale

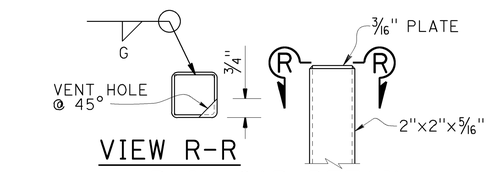

VIEW R-R
RAIL CAP DETAIL
No Scale

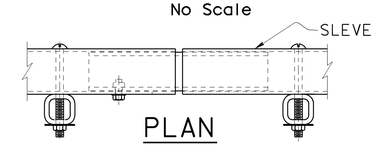

PLAN

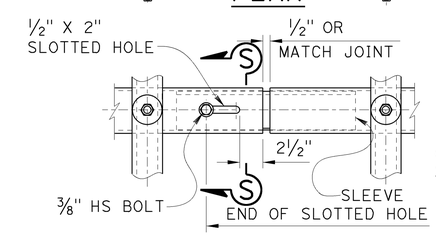

ELEVATION

SECTION S-S

TUBE EXPANSION JOINT DETAILS
No Scale

NOTES:
1. Post shall be normal to railing.
2. Rail tubes shall be shop bent or fabricated to fit horizontal curve when radius is less than 12".
3. Tube splices shall be located in the tubes spanning deck or wall joints. Increase joint width in tubes to match expansion joint width and increase sleeve length correspondingly.
4. Top rail tube shall be continuous over not less than two posts except a short post spacing is permitted near deck or wall joints, electroliers, or other rail discontinuities as noted.
5. See "ABUTMENT DETAILS NO. 6 and NO. 7" for limits of tubular bicycle railing.
6. All assemblies are to be galvanized after fabrication.
7. Threaded rods are to be cast in place.
8. Concrete texture must not be applied where base plates are attached, base plate must be mounted on flat concrete surface.
9. Apply Natina Stain to tubular bicycle railing, See "ROAD PLANS".
10. Base plate to be placed with full bearing.

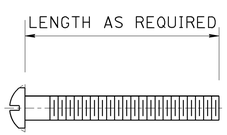

ROUND HEAD SCREW DETAIL
No Scale

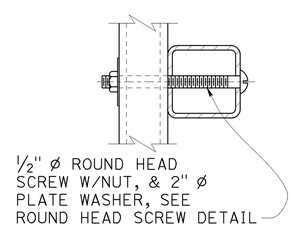

TUBE CONNECTION DETAIL
No Scale

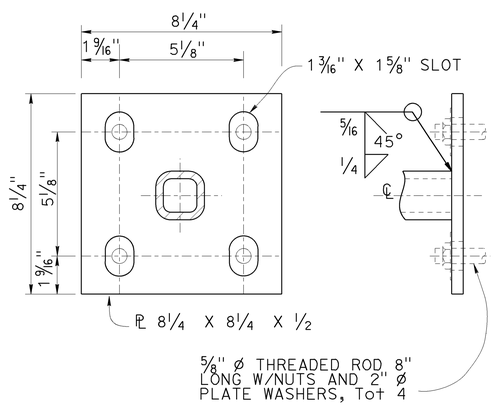

BASE PLATE DETAIL
No Scale

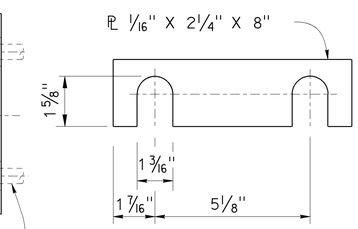

SHIM DETAILS
No Scale

	BY	CHECKED
DESIGN	Valerie Moore	Nora Kyo
DETAILS	Carlo Cancino	Nora Kyo
QUANTITIES	Nora Kyo	E. Hallstrom/M. Beall

STATE OF CALIFORNIA
DEPARTMENT OF TRANSPORTATION

DIVISION OF ENGINEERING SERVICES
STRUCTURE DESIGN
DESIGN BRANCH 8

BRIDGE NO. 21-0113
POST MILE 47.13

TROUTDALE CREEK BRIDGE (REPLACEMENT)
TUBULAR BICYCLE RAILING ON 736 (Mod) BARRIER

STRUCTURES DESIGN DETAIL SHEET (ENGLISH) (REV. 09-01-10)

ORIGINAL SCALE IN INCHES FOR REDUCED PLANS 0 1 2 3

UNIT: 3593
PROJECT NUMBER & PHASE: 04000011041
CONTRACT NO.: 04-4A0901

DISREGARD PRINTS BEARING EARLIER REVISION DATES

REVISION DATES: 8/14/13 3/28/14 5/28/14

SHEET 23 OF 30

FILE => 21-0113-u-brail_01.dgn

USERNAME => s128530 DATE PLOTTED => 09-JUL-2014 TIME PLOTTED => 09:08

DIST	COUNTY	ROUTE	POST MILES TOTAL PROJECT	SHEET No.	TOTAL SHEETS
04	Nap	29	47.0/47.2	123	146

Mary K Beall 5/28/14
REGISTERED CIVIL ENGINEER DATE

June 23, 2014
PLANS APPROVAL DATE

REGISTERED PROFESSIONAL ENGINEER MARY K. BEALL No. C76357 Exp. 12/31/14 CIVIL STATE OF CALIFORNIA

The State of California or its officers or agents shall not be responsible for the accuracy or completeness of scanned copies of this plan sheet.

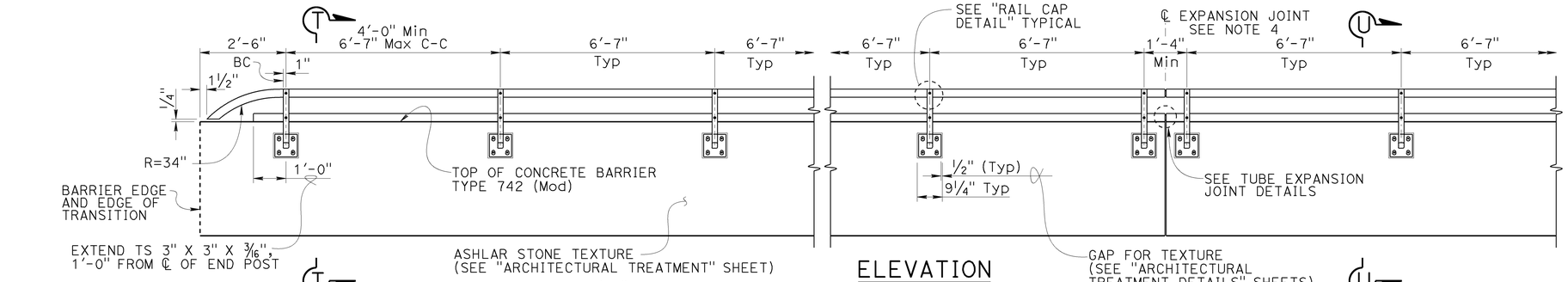

ELEVATION
No Scale

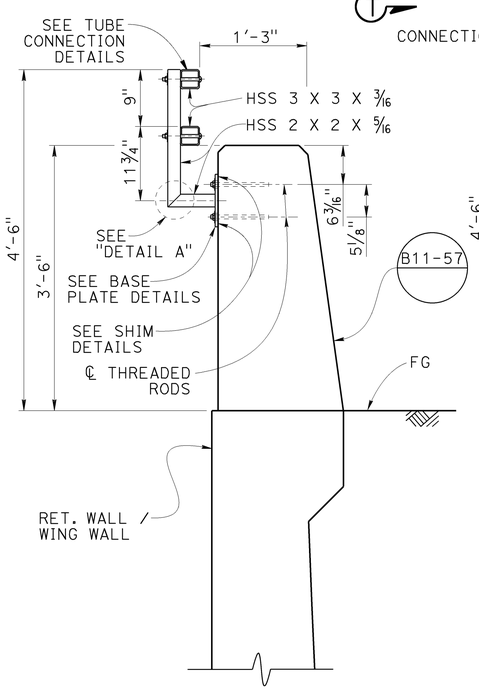

SECTION T-T AT RETAINING WALL

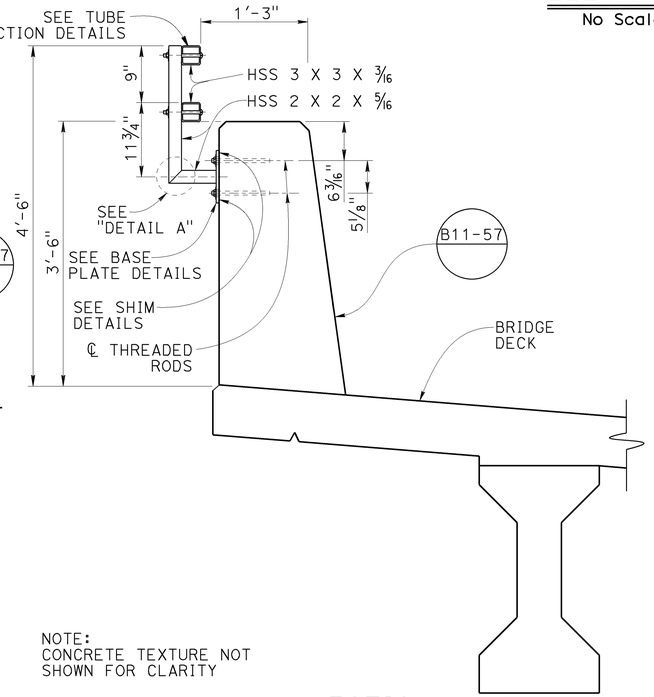

SECTION U-U AT BRIDGE DECK

NOTE:
CONCRETE TEXTURE NOT SHOWN FOR CLARITY

TUBULAR BICYCLE RAILING ON BARRIER TYPE 742 (MOD)
No Scale

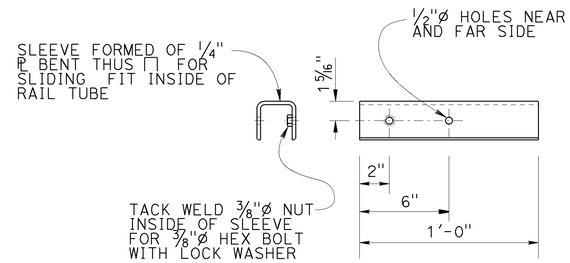

SLEEVE DETAIL
No Scale

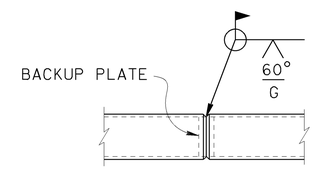

WELDED SPLICE DETAIL
No Scale

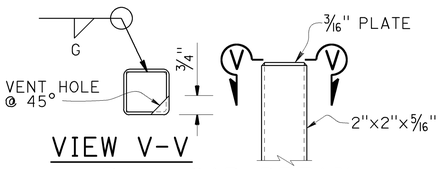

VIEW V-V
RAIL CAP DETAIL
No Scale

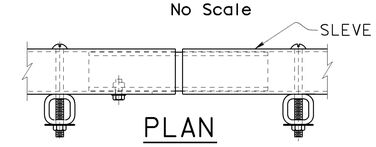

PLAN

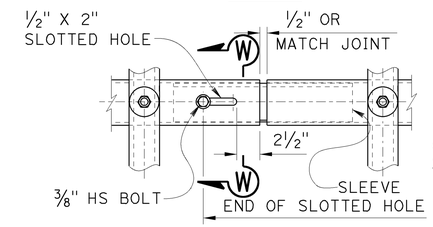

ELEVATION

SECTION W-W

TUBE EXPANSION JOINT DETAILS
No Scale

NOTES:
1. Post shall be normal to railing.
2. Rail tubes shall be shop bent or fabricated to fit horizontal curve when radius is less than 12".
3. Tube splices shall be located in the tubes spanning deck or wall joints. Increase joint width in tubes to match expansion joint width and increase sleeve length correspondingly.
4. Top rail tube shall be continuous over not less than two posts except a short post spacing is permitted near deck or wall joints, electroliers, or other rail discontinuities as noted.
5. See "ABUTMENT DETAILS NO. 6 and NO. 7" for limits of tubular bicycle railing.
6. All assemblies are to be galvanized after fabrication.
7. Threaded rods are to be cast in place.
8. Concrete texture must not be applied where base plates are attached, base plate must be mounted on flat concrete surface.
9. Apply Natina Stain to tubular bicycle railing, See "ROAD PLANS".
10. Base plate to be placed with full bearing.

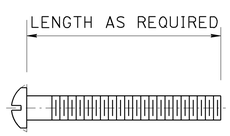

ROUND HEAD SCREW DETAIL
No Scale

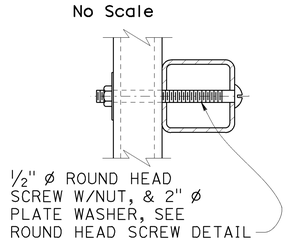

TUBE CONNECTION DETAIL
No Scale

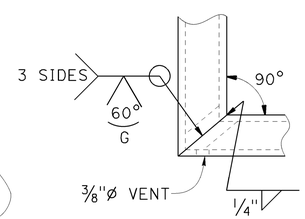

DETAIL A
No Scale

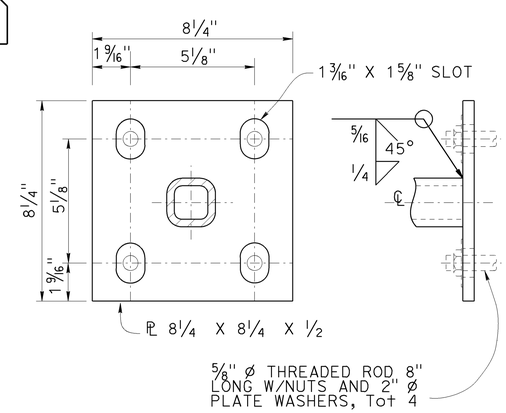

BASE PLATE DETAIL
No Scale

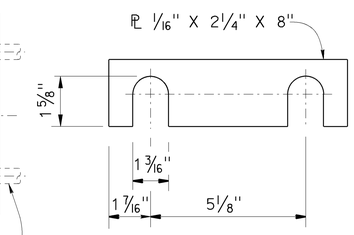

SHIM DETAILS
No Scale

DESIGN	BY Valerie Moore	CHECKED Nora Kyo	
DETAILS	BY Carlo Cancino	CHECKED Nora Kyo	
QUANTITIES	BY Nora Kyo	CHECKED E. Hallstrom/M. Beall	

STATE OF CALIFORNIA
DEPARTMENT OF TRANSPORTATION

DIVISION OF ENGINEERING SERVICES
STRUCTURE DESIGN
DESIGN BRANCH 8

BRIDGE NO. 21-0113
POST MILE 47.13

TROUTDALE CREEK BRIDGE (REPLACEMENT)
TUBULAR BICYCLE RAILING ON 742 (Mod) BARRIER

STRUCTURES DESIGN DETAIL SHEET (ENGLISH) (REV. 09-01-10)

ORIGINAL SCALE IN INCHES FOR REDUCED PLANS 0 1 2 3

UNIT: 3593
PROJECT NUMBER & PHASE: 04000011041
CONTRACT NO.: 04-4A0901

DISREGARD PRINTS BEARING EARLIER REVISION DATES

REVISION DATES 8/14/13 3/28/14 5/28/14

SHEET 24 OF 30

FILE => 21-0113-u-brail_02.dgn

USERNAME => s126530 DATE PLOTTED => 09-JUL-2014 TIME PLOTTED => 09:11

DIST	COUNTY	ROUTE	POST MILES TOTAL PROJECT	SHEET No.	TOTAL SHEETS
04	Nap	29	47.0/47.2	124	146

Mary K Beall 3/15/14
REGISTERED CIVIL ENGINEER DATE

June 23, 2014
PLANS APPROVAL DATE

REGISTERED PROFESSIONAL ENGINEER MARY K. BEALL No. C76357 Exp. 12/31/14 CIVIL STATE OF CALIFORNIA

The State of California or its officers or agents shall not be responsible for the accuracy or completeness of electronic copies of this plan sheet.

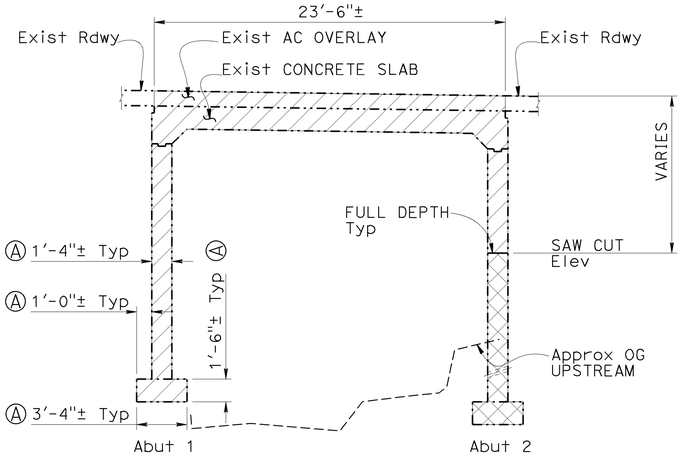

SECTION C-C
1"=5'

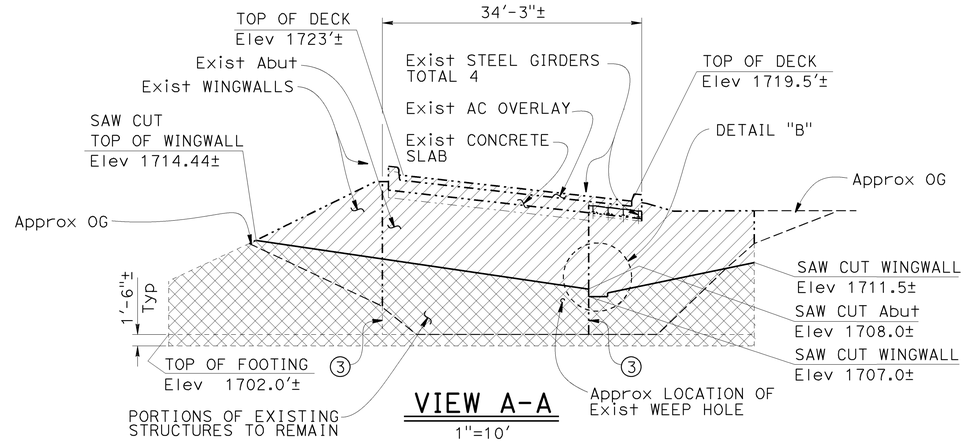

VIEW A-A
1"=10'

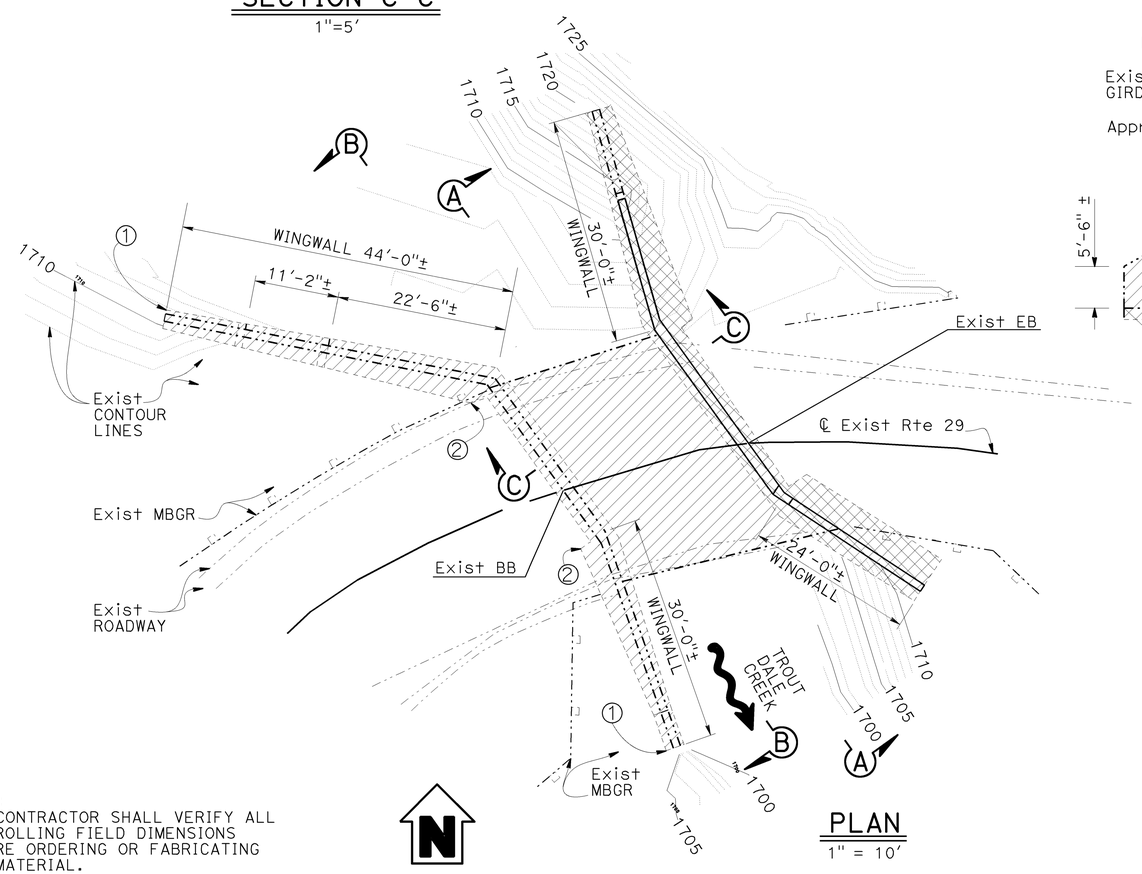

PLAN
1" = 10'

NOTE:
THE CONTRACTOR SHALL VERIFY ALL CONTROLLING FIELD DIMENSIONS BEFORE ORDERING OR FABRICATING ANY MATERIAL.

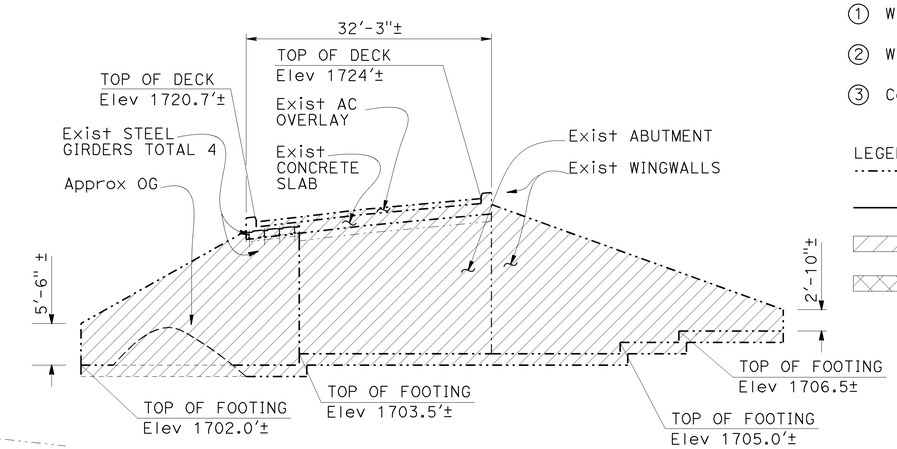

VIEW B-B
1"=10'

NOTES:

1. New bridge not shown. For location of new bridge, Br No. 21-004, see "TROUTDALE CREEK BRIDGE (REPLACE) AND RETAINING WALLS" sheets.
2. Exist bridge metal railings not shown in "PLAN," "VIEW A-A," "VIEW B-B," and "SECTION C-C"

Ⓐ Typical dimensions for abutments

① Wingwall footing width = 2'-6"±

② Wingwall footing width = 6'-8"±

③ Corner at wingwall to abutment wall

LEGEND:

- Indicates existing structure
- Indicates saw cut line
- Indicates limits of bridge removal
- Indicates limits of portion of existing structure to remain

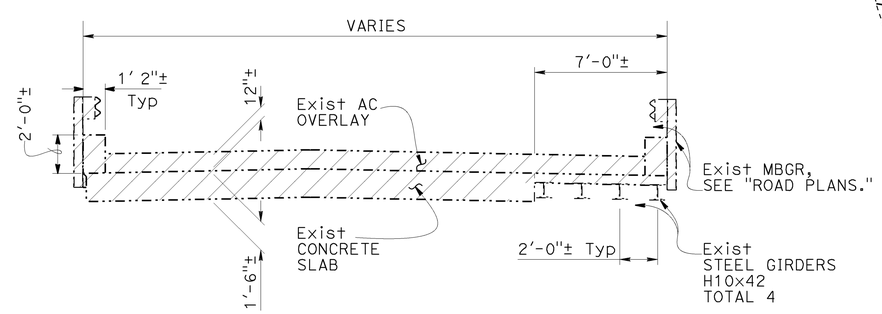

TYPICAL SECTION
No Scale

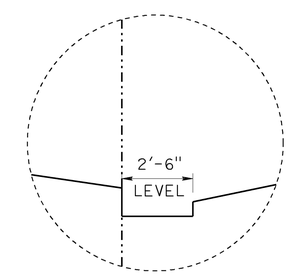

DETAIL B
NO SCALE

DESIGN	BY John R. Tjoelker	CHECKED Bichvan M. Thach	
DETAILS	BY T. Kusumi	CHECKED Bichvan M. Thach	
QUANTITIES	BY N. Shah	CHECKED Bichvan M. Thach	

STATE OF CALIFORNIA
DEPARTMENT OF TRANSPORTATION

DIVISION OF ENGINEERING SERVICES
STRUCTURE DESIGN
DESIGN BRANCH 8

BRIDGE NO. 21-0113
POST MILE 47.13

TROUTDALE CREEK BRIDGE (REPLACEMENT)
EXISTING BRIDGE REMOVAL DETAILS NO. 1

STRUCTURES DESIGN DETAIL SHEET (ENGLISH) (REV. 09-01-10)

ORIGINAL SCALE IN INCHES FOR REDUCED PLANS 0 1 2 3

UNIT: 3593
PROJECT NUMBER & PHASE: 04000011041
CONTRACT NO.: 04-4A0901

DISREGARD PRINTS BEARING EARLIER REVISION DATES

REVISION DATES: 10-02-13 10-28-13 3/15/14

SHEET 25 OF 30

FILE => 21-0113-u-miscdt01_1 detail.dgn

USERNAME => s128530 DATE PLOTTED => 09-JUL-2014 TIME PLOTTED => 09:13

DIST	COUNTY	ROUTE	POST MILES TOTAL PROJECT	SHEET No.	TOTAL SHEETS
04	Nap	29	47.0/47.2	125	146

Mary K Beall 5/28/14
REGISTERED CIVIL ENGINEER DATE

June 23, 2014
PLANS APPROVAL DATE

REGISTERED PROFESSIONAL ENGINEER
MARY K. BEALL
No. C76357
Exp. 12/31/14
CIVIL
STATE OF CALIFORNIA

The State of California or its officers or agents shall not be responsible for the accuracy or completeness of electronic copies of this plan sheet.

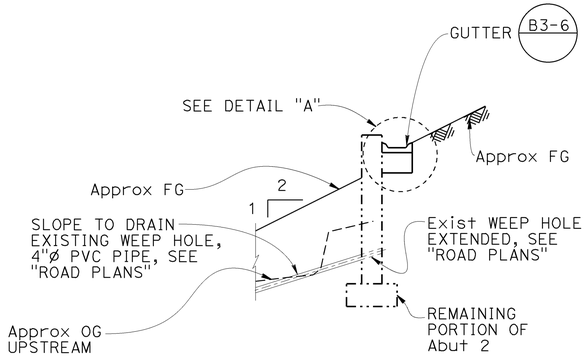

SECTION E-E

No Scale

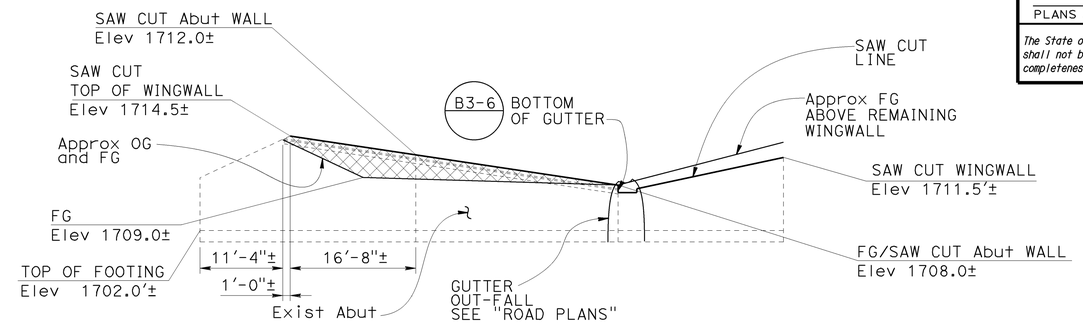

VIEW D-D

1"=10'

NOTES:
1. New bridge not shown. For location of new bridge, Br No. 21-004, see "GENERAL PLAN" sheet.
2. For details not shown, see B3-6
3. For FG, see "ROAD PLANS".

LEGEND:
Indicates existing structure
Indicates saw cut line
Indicates exposed surface of remaining portion of existing bridge abutment wall and wingwall

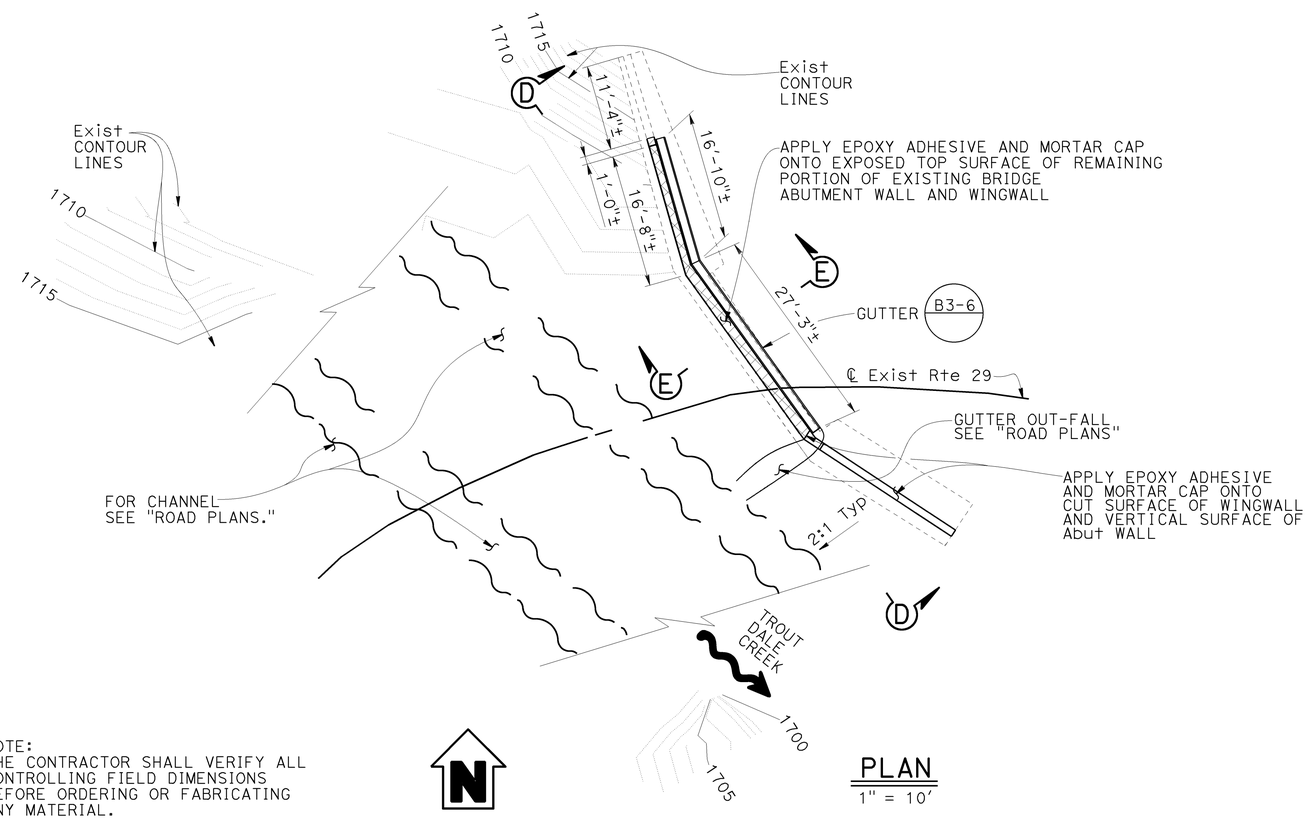

PLAN

1" = 10'

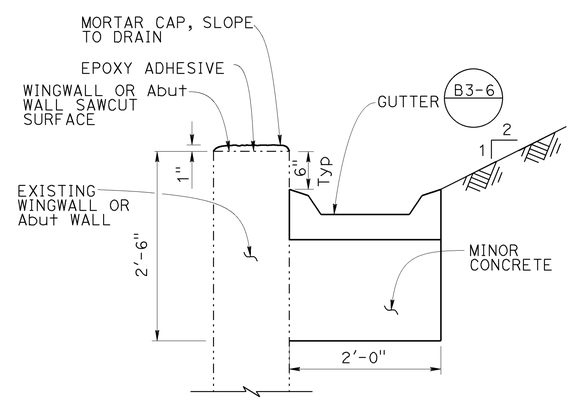

DETAIL A

1" = 1'

NOTE:
THE CONTRACTOR SHALL VERIFY ALL CONTROLLING FIELD DIMENSIONS BEFORE ORDERING OR FABRICATING ANY MATERIAL.

	BY	CHECKED
DESIGN	John R. Tjoelker	Bichvan M. Thach
DETAILS	T. Kusumi	Bichvan M. Thach
QUANTITIES	N. Shah	Bichvan M. Thach

STATE OF CALIFORNIA
DEPARTMENT OF TRANSPORTATION

DIVISION OF ENGINEERING SERVICES
STRUCTURE DESIGN
DESIGN BRANCH 8

BRIDGE NO. 21-0113
POST MILE 47.13

TROUTDALE CREEK BRIDGE (REPLACEMENT)
EXISTING BRIDGE REMOVAL DETAILS NO. 2

STRUCTURES DESIGN DETAIL SHEET (ENGLISH) (REV. 09-01-10)

ORIGINAL SCALE IN INCHES FOR REDUCED PLANS 0 1 2 3

UNIT: 3593
PROJECT NUMBER & PHASE: 04000011041
CONTRACT NO.: 04-4A0901

DISREGARD PRINTS BEARING EARLIER REVISION DATES

REVISION DATES: 10-02-13 5/28/14 3/18/14

SHEET 26 OF 30

FILE => 21-0113-u-miscdt02_2 detail.dgn

USERNAME => s128530 DATE PLOTTED => 09-JUL-2014 TIME PLOTTED => 09:51

DIST	COUNTY	ROUTE	POST MILES TOTAL PROJECT	SHEET No	TOTAL SHEETS
04	Nap	29	47.0/47.2	126	146

REGISTERED CIVIL ENGINEER 04-08-13

June 23, 2014
PLANS APPROVAL DATE

REGISTERED PROFESSIONAL ENGINEER Samuel Awad No. 64589 Exp. 6-30-15 CIVIL STATE OF CALIFORNIA

The State of California or its officers or agents shall not be responsible for the accuracy or completeness of electronic copies of this plan sheet.

This LOTB sheet was prepared in accordance with the Caltrans Soil & Rock Logging, Classification, & Presentation Manual (2010 Edition).

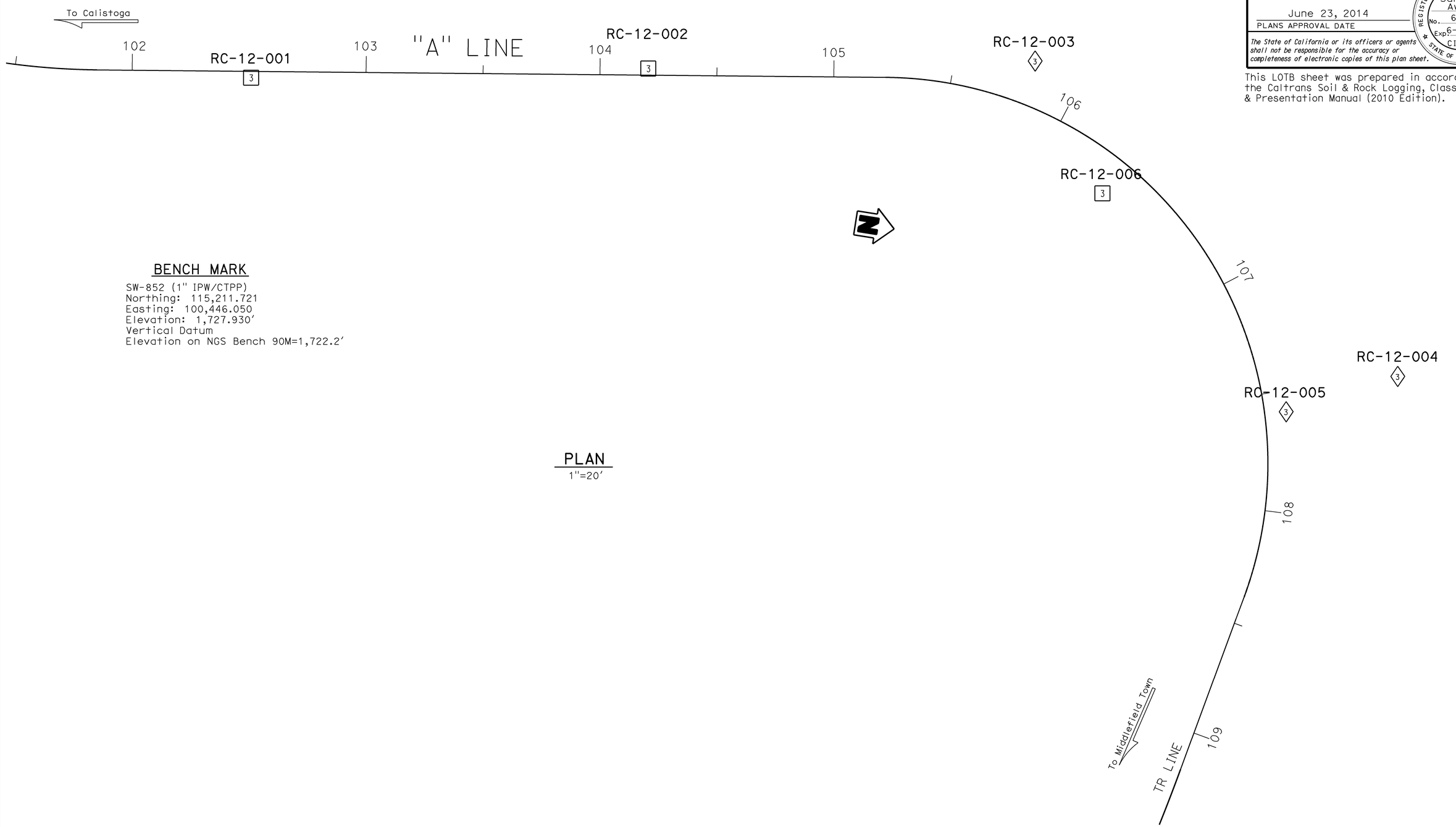

BENCH MARK

SW-852 (1" IPW/CTPP)
Northing: 115,211.721
Easting: 100,446.050
Elevation: 1,727.930'
Vertical Datum
Elevation on NGS Bench 90M=1,722.2'

PLAN

1"=20'

ENGINEERING SERVICES		GEOTECHNICAL SERVICES	STATE OF CALIFORNIA DEPARTMENT OF TRANSPORTATION	DIVISION OF ENGINEERING SERVICES OFFICE OF GEOTECHNICAL DESIGN BRANCH	BRIDGE NO. 21-004 POST MILES 47.11	TROUTDALE CREEK BRIDGE LOG OF TEST BORINGS 1 OF 4
FUNCTIONAL SUPERVISOR	DRAWN BY: M. Reynolds 03/13	FIELD INVESTIGATION BY: V. Khotan & S. Awad				
NAME:	CHECKED BY: M. Gaffney					

ORIGINAL SCALE IN INCHES FOR REDUCED PLANS 0 1 2 3

UNIT: 3660
PROJECT NUMBER & PHASE: 04000011040 CONTRACT NO.: 04-4A0900

DISREGARD PRINTS BEARING EARLIER REVISION DATES → 01-15-14

REVISION DATES | SHEET 27 | OF 30

FILE => 21-0113-z-lotb1.dgn

USERNAME => s128530 DATE PLOTTED => 09-JUL-2014 TIME PLOTTED => 10:01

DIST	COUNTY	ROUTE	POST MILES TOTAL PROJECT	SHEET No	TOTAL SHEETS
04	Nap	29	47.0/47.2	127	146

REGISTERED CIVIL ENGINEER 04-08-13

June 23, 2014
PLANS APPROVAL DATE

REGISTERED PROFESSIONAL ENGINEER Samuel Awad No. 64589 Exp. 6-30-15 CIVIL STATE OF CALIFORNIA

The State of California or its officers or agents shall not be responsible for the accuracy or completeness of electronic copies of this plan sheet.

This LOTB sheet was prepared in accordance with the Caltrans Soil & Rock Logging, Classification, & Presentation Manual (2010 Edition).

NOTE: Groundwater not encountered at RC-12-002, RC-12-003 during drilling operation.

(For Boring Location See Plan, LOTB Sheet 1 of 4)

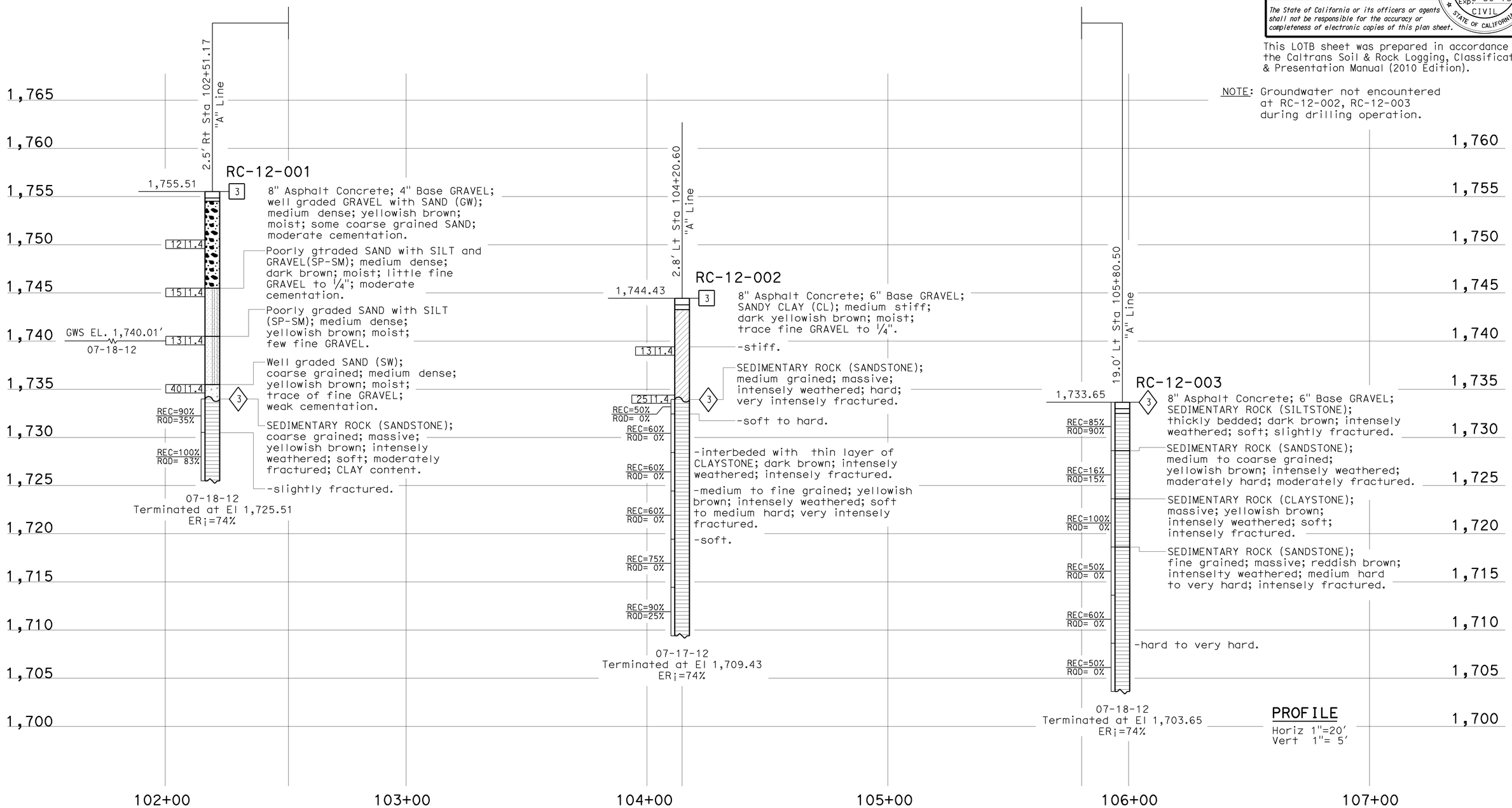

ENGINEERING SERVICES		GEOTECHNICAL SERVICES	STATE OF CALIFORNIA DEPARTMENT OF TRANSPORTATION	DIVISION OF ENGINEERING SERVICES OFFICE OF GEOTECHNICAL DESIGN BRANCH	BRIDGE NO. 21-004 / POST MILES 47.11	TROUTDALE CREEK BRIDGE
FUNCTIONAL SUPERVISOR	DRAWN BY: M. Reynolds 03/13	FIELD INVESTIGATION BY: V. Khotan & S. Awad				LOG OF TEST BORINGS 2 OF 4
NAME:	CHECKED BY: M. Gaffney					

ORIGINAL SCALE IN INCHES FOR REDUCED PLANS 0 1 2 3

UNIT: 3660
PROJECT NUMBER & PHASE: 04000011040 CONTRACT NO.: 04-4A0900

DISREGARD PRINTS BEARING EARLIER REVISION DATES → 01-15-14

REVISION DATES | SHEET 28 | OF 30

FILE => 21-0113-z-lotb2.dgn

USERNAME => S128530 DATE PLOTTED => 09-JUL-2014 TIME PLOTTED => 10:08

DIST	COUNTY	ROUTE	POST MILES TOTAL PROJECT	SHEET No	TOTAL SHEETS
04	Nap	29	47.0/47.2	128	146

REGISTERED CIVIL ENGINEER 04-08-13

June 23, 2014
PLANS APPROVAL DATE

REGISTERED PROFESSIONAL ENGINEER Samuel Awad No. 64589 Exp. 6-30-15 CIVIL STATE OF CALIFORNIA

The State of California or its officers or agents shall not be responsible for the accuracy or completeness of electronic copies of this plan sheet.

This LOTB sheet was prepared in accordance with the Caltrans Soil & Rock Logging, Classification, & Presentation Manual (2010 Edition).

NOTE: Groundwater not encountered at RC-12-004, RC-12-006 during drilling operation.

(For Boring Location See Plan, LOTB Sheet 1 of 4)

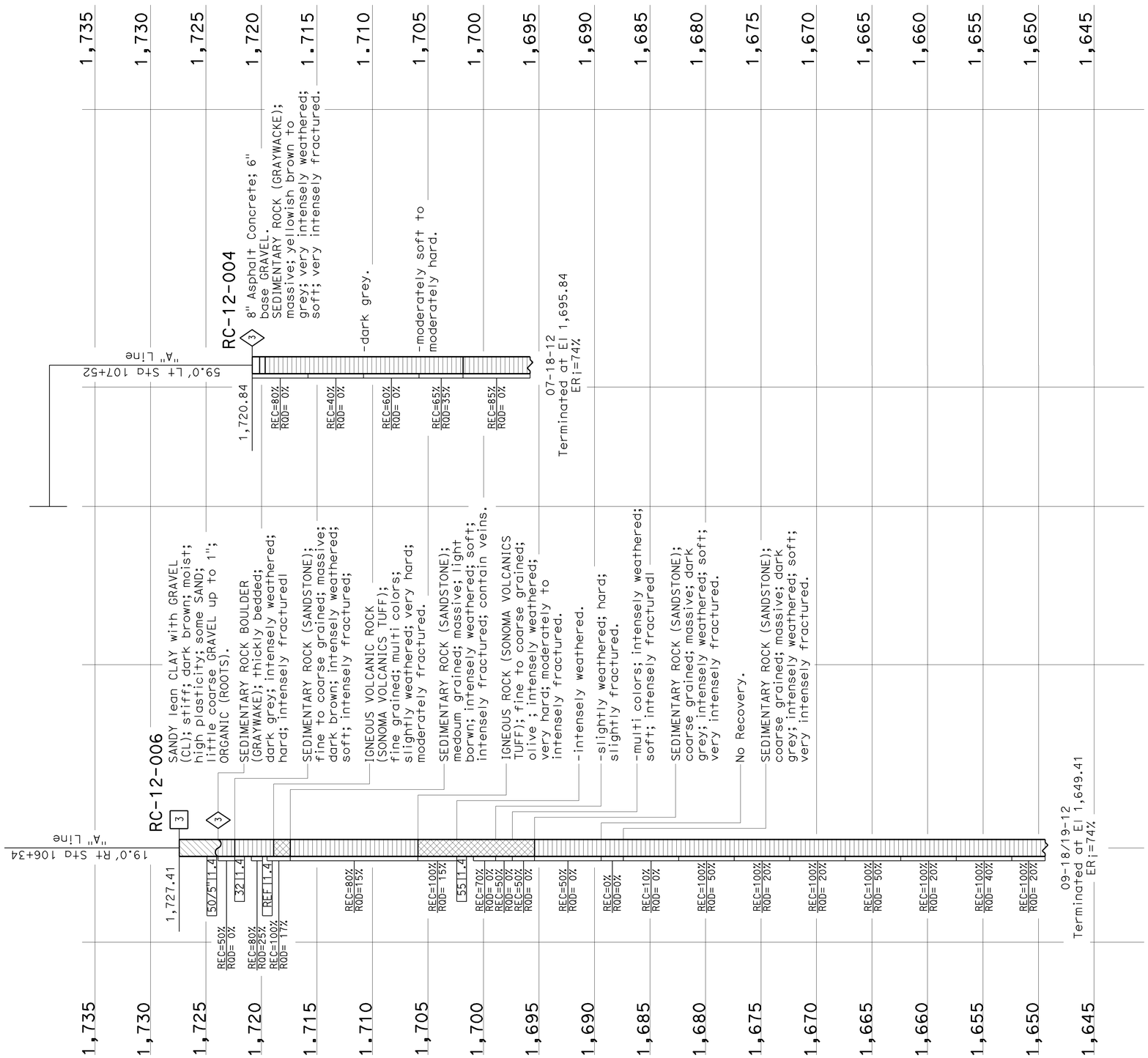

PROFILE
Horiz 1"=20'
Vert 1"= 5'

ENGINEERING SERVICES	GEOTECHNICAL SERVICES	STATE OF CALIFORNIA DEPARTMENT OF TRANSPORTATION	DIVISION OF ENGINEERING SERVICES OFFICE OF GEOTECHNICAL DESIGN BRANCH	BRIDGE NO. 21-004 POST MILES 47.11	TROUTDALE CREEK BRIDGE
FUNCTIONAL SUPERVISOR	DRAWN BY: M. Reynolds 03/13	FIELD INVESTIGATION BY: V. Khotan & S. Awad			LOG OF TEST BORINGS 3 OF 4
NAME:	CHECKED BY: M. Gaffney				

ORIGINAL SCALE IN INCHES FOR REDUCED PLANS 0 1 2 3

UNIT: 3660
PROJECT NUMBER & PHASE: 04000011040 CONTRACT NO.: 04-4A0900

DISREGARD PRINTS BEARING EARLIER REVISION DATES

REVISION DATES			SHEET	OF
06-04-13	01-15-14		29	30

FILE => 21-0113-z-lotb3.dgn

USERNAME => s128530 DATE PLOTTED => 09-JUL-2014 TIME PLOTTED => 10:09

DIST	COUNTY	ROUTE	POST MILES TOTAL PROJECT	SHEET No	TOTAL SHEETS
04	Nap	29	47.0/47.2	129	146

REGISTERED CIVIL ENGINEER 04-08-13

June 23, 2014
PLANS APPROVAL DATE

REGISTERED PROFESSIONAL ENGINEER
Samuel Awad
No. 64589
Exp. 6-30-15
CIVIL
STATE OF CALIFORNIA

The State of California or its officers or agents shall not be responsible for the accuracy or completeness of electronic copies of this plan sheet.

This LOTB sheet was prepared in accordance with the Caltrans Soil & Rock Logging, Classification, & Presentation Manual (2010 Edition).

NOTE: Groundwater not encountered at RC-12-005 during drilling operation.

(For Boring Location See Plan, LOTB Sheet 1 of 4)

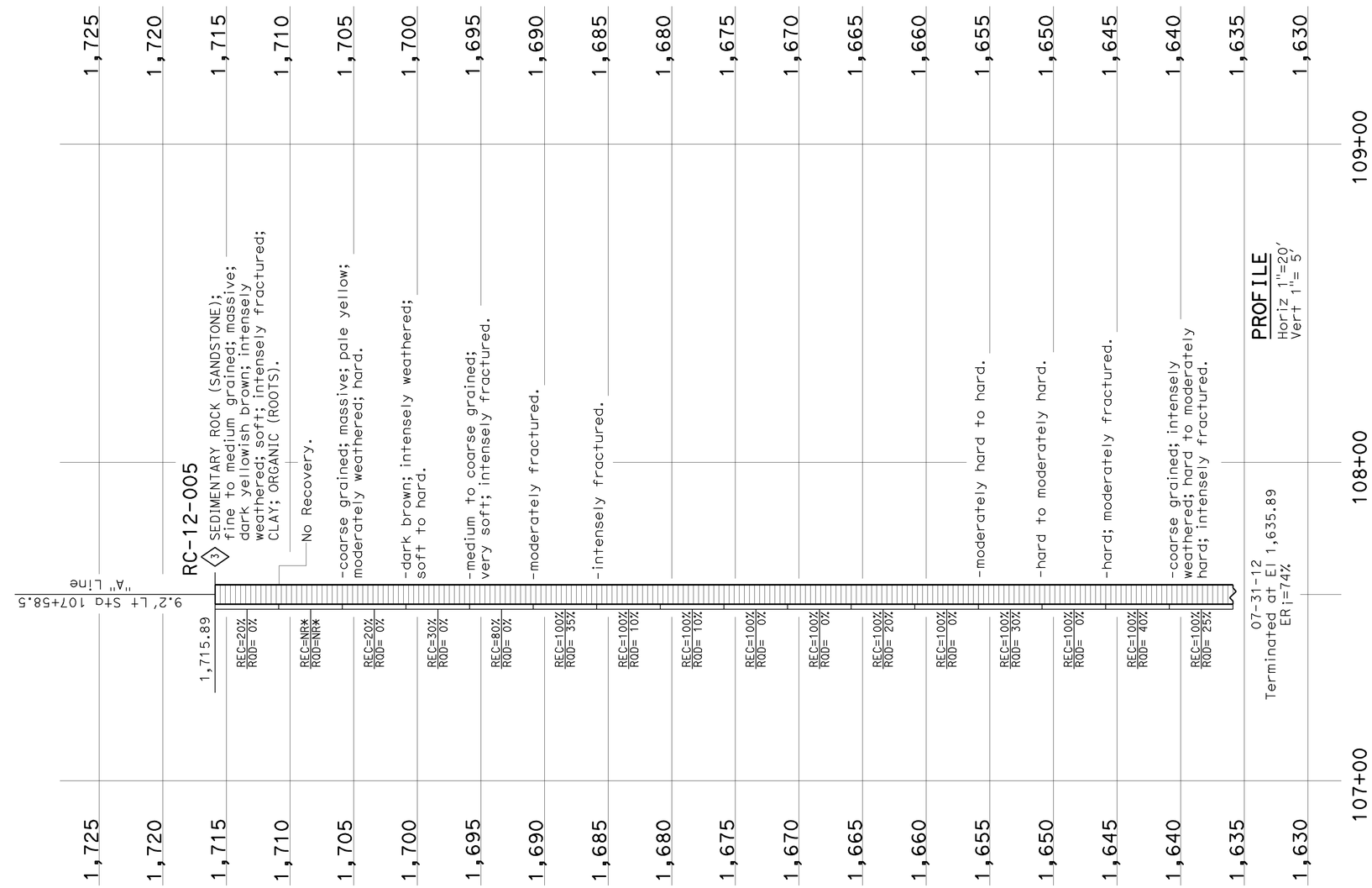

ENGINEERING SERVICES		GEOTECHNICAL SERVICES	STATE OF CALIFORNIA DEPARTMENT OF TRANSPORTATION	DIVISION OF ENGINEERING SERVICES OFFICE OF GEOTECHNICAL DESIGN BRANCH	BRIDGE NO. 21-004 POST MILES 47.11	TROUTDALE CREEK BRIDGE
FUNCTIONAL SUPERVISOR	DRAWN BY: M. Reynolds 03/13	FIELD INVESTIGATION BY: V. Khotan & S. Awad				LOG OF TEST BORINGS 4 OF 4
NAME:	CHECKED BY: M. Gaffney					

ORIGINAL SCALE IN INCHES FOR REDUCED PLANS 0 1 2 3

UNIT: 3660
PROJECT NUMBER & PHASE: 04000011040 CONTRACT NO.: 04-4A0900

DISREGARD PRINTS BEARING EARLIER REVISION DATES → 01-15-14

REVISION DATES | SHEET 30 | OF 30

FILE => 21-0113-z-lotb4.dgn

USERNAME => s128530 DATE PLOTTED => 09-JUL-2014 TIME PLOTTED => 10:10

DIST	COUNTY	ROUTE	POST MILES TOTAL PROJECT	SHEET No.	TOTAL SHEETS
04	Nap	29	47.0/47.2	130	146

Mary K Beall 3/15/14
REGISTERED CIVIL ENGINEER DATE

June 23, 2014
PLANS APPROVAL DATE

REGISTERED PROFESSIONAL ENGINEER
MARY K. BEALL
No. C76357
Exp. 12/31/14
CIVIL
STATE OF CALIFORNIA

The State of California or its officers or agents shall not be responsible for the accuracy or completeness of scanned copies of this plan sheet.

QUANTITIES

STRUCTURE EXCAVATION (SOLDIER PILE WALL)	63	CY
STRUCTURE BACKFILL (SOLDIER PILE WALL)	102	CY
CONCRETE BACKFILL (SOLDIER PILE WALL)	237	CY
LEAN CONCRETE BACKFILL	37	CY
STEEL SOLDIER PILE (W 14 X 176)	942	LF
STEEL SOLDIER PILE (W 14 X 233)	817	LF
30" DRILLED HOLE	1,539	LF
STRUCTURAL CONCRETE, BARRIER SLAB	184	CY
TIMBER LAGGING	20	MFBM
CLEAN AND PAINT STEEL SOLDIER PILING	LUMP	SUM
MISCELLANEOUS METAL (BRIDGE)	145	LB
TUBULAR BICYCLE RAILING	357	LF
CONCRETE BARRIER (TYPE 736 MODIFIED)	361	LF

NOTES:
(A) MGS (Midwest Guardrail System), see "ROAD PLANS"
(B) Temporary Railing (Type K), see "ROAD PLANS"
[1] Paint "WALL NO. 21E0017"

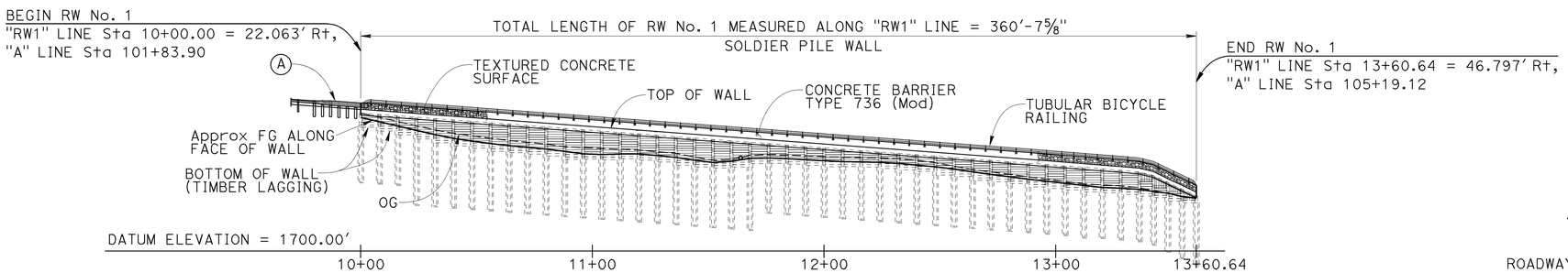

DEVELOPED ELEVATION

1" = 30'-0"

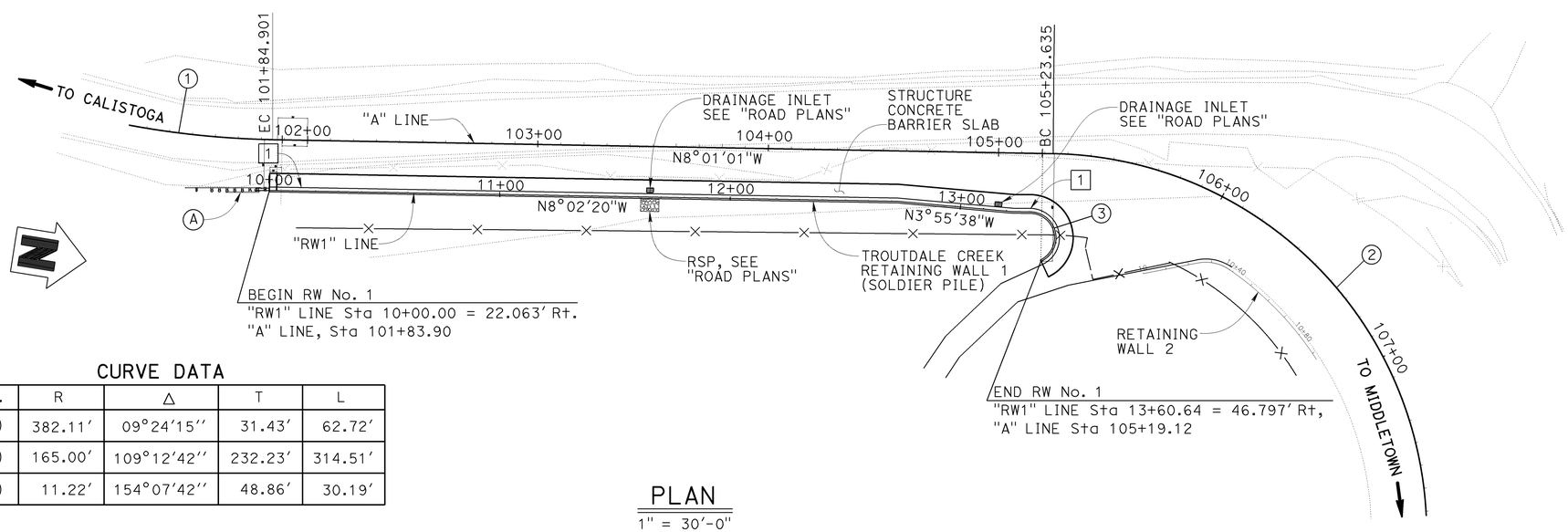

CURVE DATA

No.	R	Δ	T	L
1	382.11'	09°24'15"	31.43'	62.72'
2	165.00'	109°12'42"	232.23'	314.51'
3	11.22'	154°07'42"	48.86'	30.19'

PLAN

1" = 30'-0"

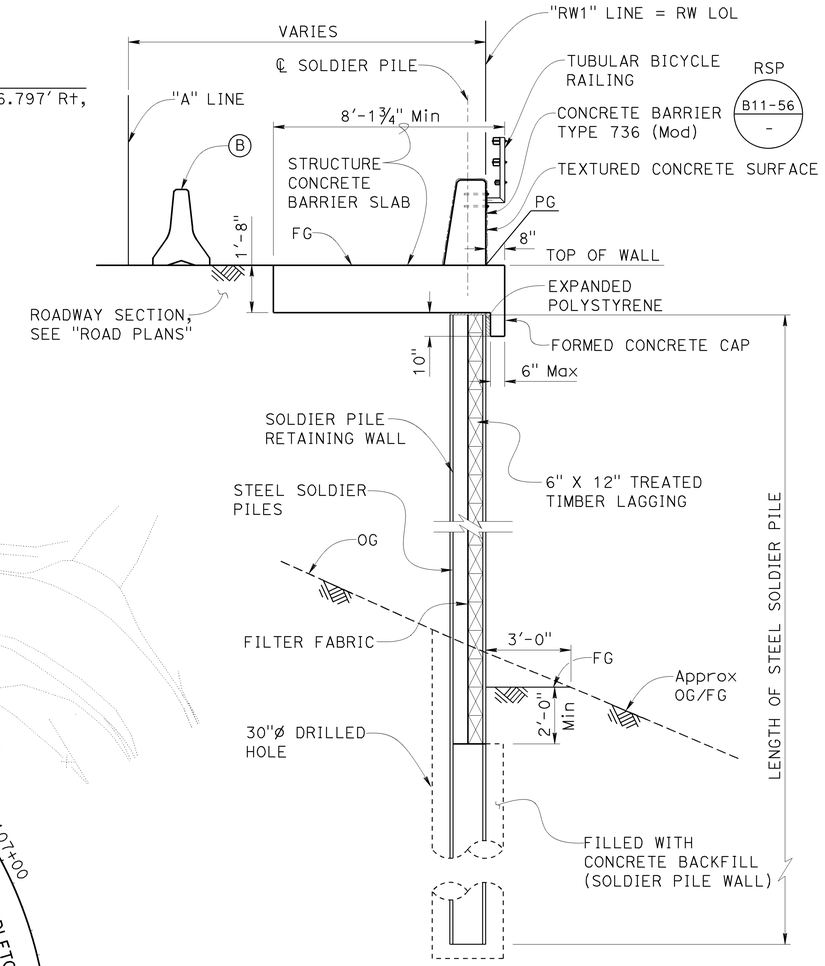

TYPICAL SECTION

⅜" = 1'-0"

NOTE:
THE CONTRACTOR SHALL VERIFY ALL CONTROLLING FIELD DIMENSIONS BEFORE ORDERING OR FABRICATING ANY MATERIAL.

BRIAN MORI
DESIGN ENGINEER

	BY	CHECKED
DESIGN	Mary Beall	John Tjoelker
DETAILS	E. Hallstrom/C. Cancino	Mary Beall / J. Tjoelker
QUANTITIES	Mary Beall	John Tjoelker

LOAD & RESISTANCE FACTOR DESIGN — LIVE LOADING: HL93 W/"LOW-BOY"; PERMIT DESIGN VEHICLE
LAYOUT: BY Mary Beall — CHECKED John Tjoelker
SPECIFICATIONS: BY Dave Klein — PLANS AND SPECS COMPARED Dave Klein

ORIGINAL SCALE IN INCHES FOR REDUCED PLANS 0 1 2 3

STATE OF CALIFORNIA
DEPARTMENT OF TRANSPORTATION

DIVISION OF ENGINEERING SERVICES
STRUCTURE DESIGN
DESIGN BRANCH 8

BRIDGE NO. 21E0017
POST MILE 47.04

TROUTDALE CREEK RETAINING WALL 1
GENERAL PLAN

UNIT: 3593
PROJECT NUMBER & PHASE: 0400001104, 1
CONTRACT NO.: 04-4a0901

DISREGARD PRINTS BEARING EARLIER REVISION DATES
REVISION DATES 01-17-13 01-02-14 01-29-14
SHEET 1 OF 17

FILE => 21e0017-a-gp.dgn

USERNAME => s128530 DATE PLOTTED => 09-JUL-2014 TIME PLOTTED => 10:13

STRUCTURES DESIGN GENERAL PLAN SHEET (ENGLISH) (REV.09-01-10)

DIST	COUNTY	ROUTE	POST MILES TOTAL PROJECT	SHEET No.	TOTAL SHEETS
04	Nap	29	47.0/47.2	131	146

Mary K Beall 3/15/14
REGISTERED CIVIL ENGINEER DATE

June 23, 2014
PLANS APPROVAL DATE

REGISTERED PROFESSIONAL ENGINEER
MARY K. BEALL
No. 76357
Exp. 12-31-2014
CIVIL
STATE OF CALIFORNIA

The State of California or its officers or agents shall not be responsible for the accuracy or completeness of scanned copies of this plan sheet.

INDEX TO PLANS

SHEET NO.	TITLE
1	GENERAL PLAN
2	INDEX TO PLANS
3	STRUCTURE PLAN NO. 1
4	STRUCTURE PLAN NO. 2
5	SOLDIER PILE WALL DATA TABLE
6	FOUNDATION PLAN
7	WALL DETAILS NO. 1
8	WALL DETAILS NO. 2
9	DRAINAGE DETAILS
10	STRUCTURE CONCRETE BARRIER SLAB DETAILS
11	ARCHITECTURAL TREATMENT DETAILS NO. 1
12	ARCHITECTURAL TREATMENT DETAILS NO. 2
13	TUBULAR BICYCLE RAILING
14	LOG OF TEST BORINGS NO. 1 OF 4
15	LOG OF TEST BORINGS NO. 2 OF 4
16	LOG OF TEST BORINGS NO. 3 OF 4
17	LOG OF TEST BORINGS NO. 4 OF 4

STANDARD PLANS 2010

PLAN NO.	PLAN TITLE
A10A	ABBREVIATIONS (SHEET 1 OF 2)
RSP A10B	ABBREVIATIONS (SHEET 2 OF 2)
A10C	LINES AND SYMBOLS (SHEET 1 OF 3)
A10D	LINES AND SYMBOLS (SHEET 2 OF 3)
A10E	LINES AND SYMBOLS (SHEET 3 OF 3)
A10F	LEGEND - SOIL (SHEET 1 OF 2)
A10G	LEGEND - SOIL (SHEET 2 OF 2)
A10H	LEGEND - ROCK
RSP A77U4	MIDWEST GUARDRAIL SYSTEM TRANSITION RAILING (TYPE WB-31)
RSP B11-56	CONCRETE BARRIER TYPE 736

STANDARD PLAN NO.

DETAIL NO.

GENERAL NOTES

LOAD AND RESISTANCE FACTOR DESIGN

DESIGN : AASHTO LRFD BRIDGE DESIGN SPECIFICATIONS, 4th Edition with Caltrans Amendments and Standard Bridge Details (XS Sheets)

LIVE LOAD : 240 psf uniformly applied from top of wall to a depth of 10 feet

SOIL PARAMETERS : (For determination of Design Lateral Earth Pressures)

LAYER	PARAMETERS
Active	γ = 130 lb/ft^3 ϕ = 34° C = 250
Passive	γ = 130 lb/ft^3 ϕ = 38° C = 250

STEEL SOLDIER PILES : ASTM A709/A709M or Grade 50 or A572/A572M, Grade 50
fy = 50 ksi

REINFORCED CONCRETE : f'c = 3,600 psi
fy = 60 Ksi

STRUCTURAL TIMBER : Treated Douglas Fir, Grade No. 1 or better
Timber to be full sawn

MISCELLANEOUS METALS:

TUBULAR HAND RAILING : ASTM A500, Grade B
fy = 36 ksi

ANCHORS : ASTM A307, Grade C

LAG SCREWS : ASTM F593 or F738 M

HIGH STRENGTH BOLTS : ASTM A325

THREADED ROD : ASTM F593 or F738 M

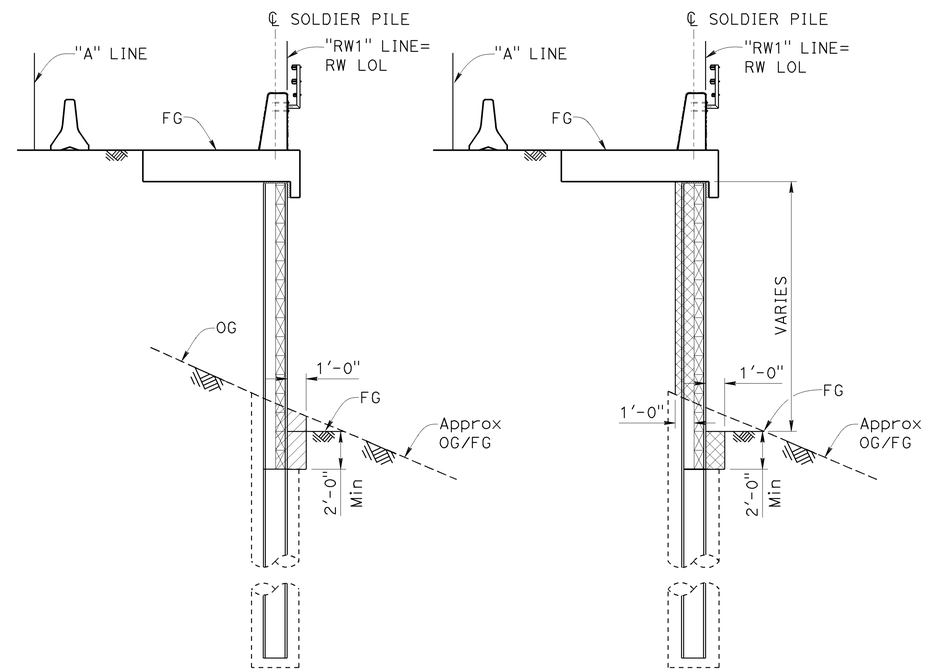

EXCAVATION

BACKFILL

LIMITS OF PAYMENT FOR EXCAVATION AND BACKFILL

No Scale

LEGEND:

Indicates structure excavation (Soldier Pile Wall)

Indicates structure backfill (Soldier Pile Wall)

	BY	CHECKED
DESIGN	Mary Beall	John Tjoelker
DETAILS	Carlo Cancino	M. Beall / J. Tjoelker
QUANTITIES	Mary Beall	John Tjoelker

STATE OF CALIFORNIA
DEPARTMENT OF TRANSPORTATION

DIVISION OF ENGINEERING SERVICES
STRUCTURE DESIGN
DESIGN BRANCH 8

BRIDGE NO. 21E0017
POST MILE 47.04

TROUTDALE CREEK RETAINING WALL 1
INDEX TO PLANS

STRUCTURES DESIGN DETAIL SHEET (ENGLISH) (REV. 09-01-10)

ORIGINAL SCALE IN INCHES FOR REDUCED PLANS 0 1 2 3

UNIT: 3593
PROJECT NUMBER & PHASE: 0400001104, 1 CONTRACT NO.: 04-4a0901

DISREGARD PRINTS BEARING EARLIER REVISION DATES

REVISION DATES: 09-30-13 01-14-14 01-21-14

SHEET 2 OF 17

FILE => 21e0017-b-itp.dgn

USERNAME => s126530 DATE PLOTTED => 09-JUL-2014 TIME PLOTTED => 10:14

DIST	COUNTY	ROUTE	POST MILES TOTAL PROJECT	SHEET No.	TOTAL SHEETS
04	Nap	29	47.0/47.2	132	146

Mary K Beall 3/15/14
REGISTERED CIVIL ENGINEER DATE

June 23, 2014
PLANS APPROVAL DATE

REGISTERED PROFESSIONAL ENGINEER MARY K. BEALL No. 76357 Exp. 12-31-2014 CIVIL STATE OF CALIFORNIA

The State of California or its officers or agents shall not be responsible for the accuracy or completeness of scanned copies of this plan sheet.

NOTE:
FOR SECTION D-D, SEE "STRUCTURE CONCRETE BARRIER SLAB DETAILS" SHEET.

NOTES:
1. For complete Right of Way data, see Right of Way records maps at District Office.
2. For Details not shown, see RSP B11-56.

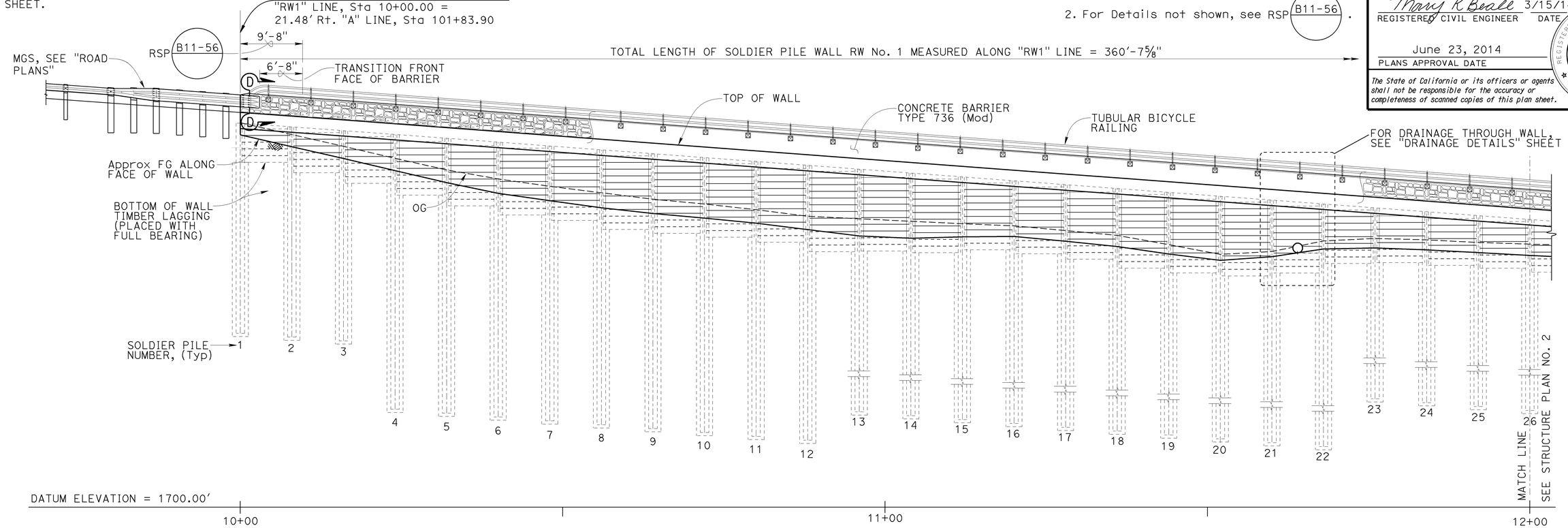

DEVELOPED ELEVATION

⅛" = 1'-0"

NOTE:
For Tip Elev., Pile Type, Pile Length and other data not shown, see "SOLDIER PILE WALL DATA TABLE" sheet.

SOLDIER PILE NUMBER	1	2	3	4	5	6	7	8	9	10	11	12	13	14	15	16	17	18	19	20	21	22	23	24	25	26
NO. OF TIMBER LAGGING (HORIZONTAL)	6	7	8	9	10	11	11	12	12	12	12	13	12	12	11	11	11	12	12	12	11	9	8	8	8	
NO. OF TIMBER LAGGING (VERTICAL)	0	0	0	0	0	0	0	0	0	0	0	0	0	0	0	0	0	0	0	0	0	0	0	0	0	
BOTTOM OF WALL ELEV. (LAGGING)	1753.38	1751.76	1750.12	1748.29	1746.64	1745.22	1744.40	1742.99	1742.40	1741.80	1741.02	1739.55	1739.67	1739.42	1739.86	1739.22	1737.24	1738.16	1736.26	1735.82	1736.23	1737.75	1737.88	1737.45	1736.98	

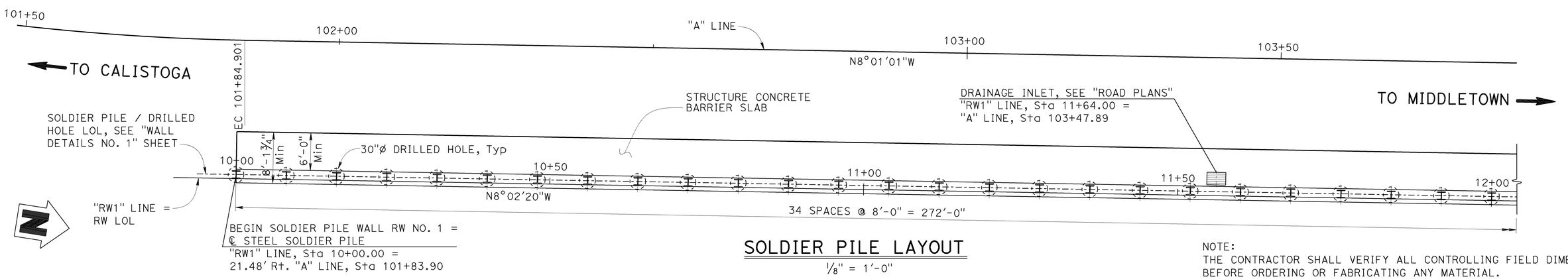

SOLDIER PILE LAYOUT

⅛" = 1'-0"

NOTE:
THE CONTRACTOR SHALL VERIFY ALL CONTROLLING FIELD DIMENSIONS BEFORE ORDERING OR FABRICATING ANY MATERIAL.

	BY	CHECKED
DESIGN	Mary Beall	John Tjoelker
DETAILS	Carlo Cancino	M. Beall / J. Tjoelker
QUANTITIES	Mary Beall	John Tjoelker

STATE OF CALIFORNIA
DEPARTMENT OF TRANSPORTATION

DIVISION OF ENGINEERING SERVICES
STRUCTURE DESIGN
DESIGN BRANCH 8

BRIDGE NO. 21E0017
POST MILE 47.04

TROUTDALE CREEK RETAINING WALL 1
STRUCTURE PLAN NO. 1

STRUCTURES DESIGN DETAIL SHEET (ENGLISH) (REV. 09-01-10)

ORIGINAL SCALE IN INCHES FOR REDUCED PLANS 0 1 2 3

UNIT: 3593
PROJECT NUMBER & PHASE: 0400001104, 1
CONTRACT NO.: 04-4a0901

DISREGARD PRINTS BEARING EARLIER REVISION DATES

REVISION DATES: 10-28-13 01-21-14 01-22-14

SHEET 3 OF 17

FILE => 21e0017-c-sp1.dgn

USERNAME => s128530 DATE PLOTTED => 09-JUL-2014 TIME PLOTTED => 10:17

DIST	COUNTY	ROUTE	POST MILES TOTAL PROJECT	SHEET No.	TOTAL SHEETS
04	Nap	29	47.0/47.2	133	146

Mary K Beall 5/28/14
REGISTERED CIVIL ENGINEER DATE

June 23, 2014
PLANS APPROVAL DATE

REGISTERED PROFESSIONAL ENGINEER
MARY K. BEALL
No. 76357
Exp. 12-31-2014
CIVIL
STATE OF CALIFORNIA

The State of California or its officers or agents shall not be responsible for the accuracy or completeness of scanned copies of this plan sheet.

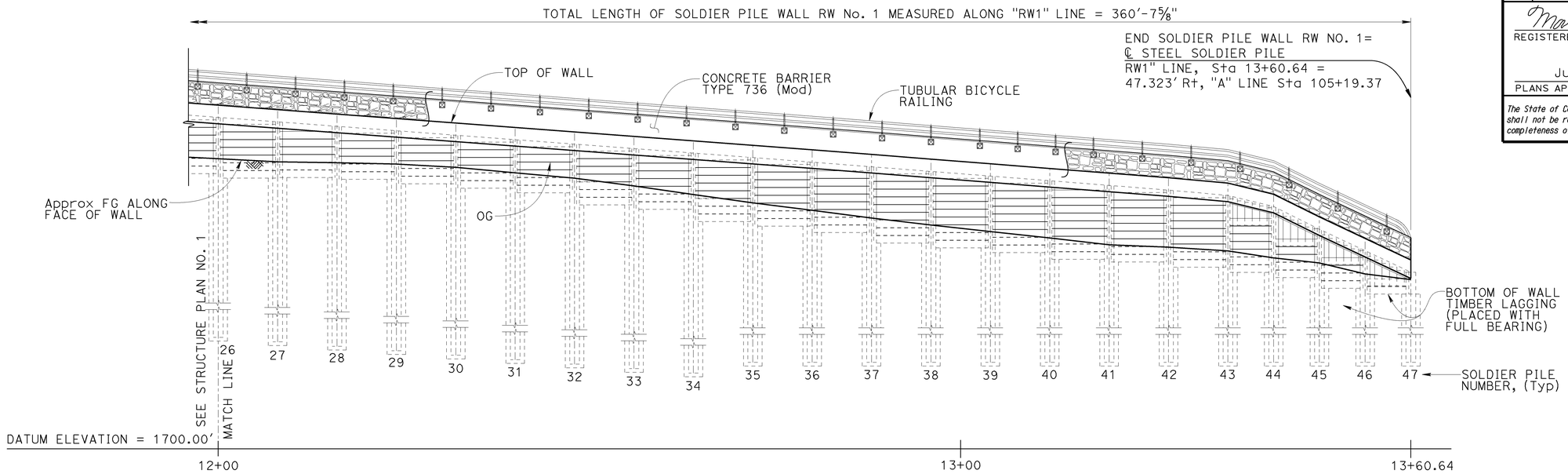

DEVELOPED ELEVATION

⅛" = 1'-0"

NOTE:
For Tip Elev., Pile Type, Pile Length and other data not shown, see "SOLDIER PILE WALL DATA TABLE" sheet.

SOLDIER PILE NUMBER	26	27	28	29	30	31	32	33	34	35	36	37	38	39	40	41	42	43	44	45	46	47
NO. OF TIMBER LAGGING (HORIZONTAL)	8	7	7	7	7	7	8	8	9	9	9	10	10	10	10	10	10	8	6	5	3	
NO. OF TIMBER LAGGING (VERTICAL)	0	0	0	0	0	0	0	0	0	0	0	0	0	0	0	0	0	6	6	6	6	
BOTTOM OF WALL ELEV. (LAGGING)	1736.39	1736.48	1736.08	1735.63	1735.01	1734.40	1732.77	1732.16	1730.52	1729.91	1729.05	1727.63	1727.00	1726.36	1725.45	1725.45	1724.42	1723.69	1723.00	1721.52	1720.77	

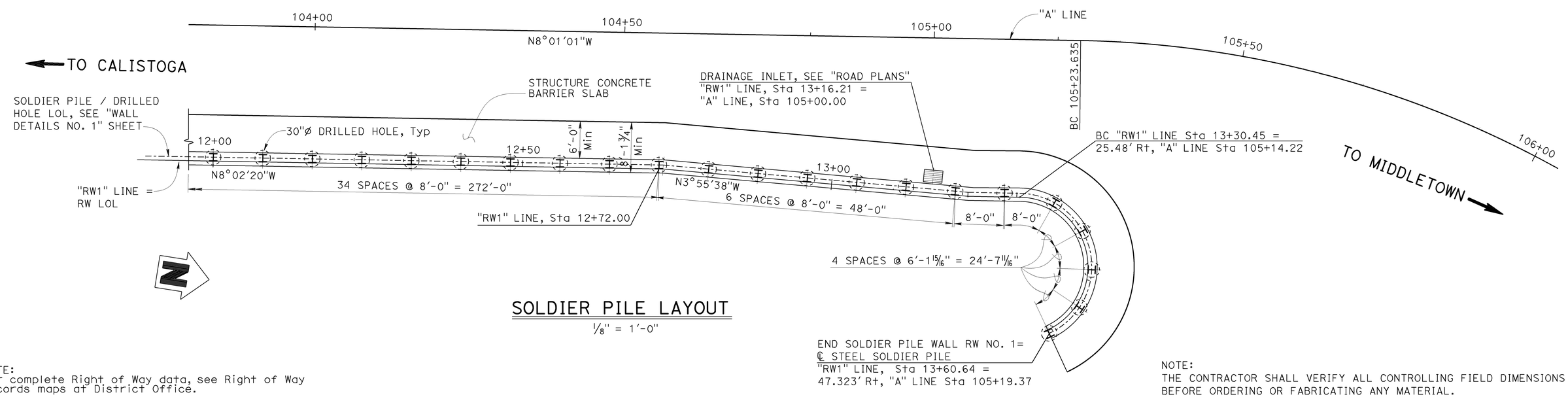

SOLDIER PILE LAYOUT

⅛" = 1'-0"

NOTE:
For complete Right of Way data, see Right of Way records maps at District Office.

NOTE:
THE CONTRACTOR SHALL VERIFY ALL CONTROLLING FIELD DIMENSIONS BEFORE ORDERING OR FABRICATING ANY MATERIAL.

	BY	CHECKED
DESIGN	Mary Beall	John Tjoelker
DETAILS	Carlo Cancino	M. Beall / J. Tjoelker
QUANTITIES	Mary Beall	John Tjoelker

STATE OF CALIFORNIA
DEPARTMENT OF TRANSPORTATION

DIVISION OF ENGINEERING SERVICES
STRUCTURE DESIGN
DESIGN BRANCH 8

BRIDGE NO. 21E0017
POST MILE 47.04

TROUTDALE CREEK RETAINING WALL 1
STRUCTURE PLAN NO. 2

STRUCTURES DESIGN DETAIL SHEET (ENGLISH) (REV. 09-01-10)

ORIGINAL SCALE IN INCHES FOR REDUCED PLANS 0 1 2 3

UNIT: 3593
PROJECT NUMBER & PHASE: 0400001104, 1
CONTRACT NO.: 04-4a0901

DISREGARD PRINTS BEARING EARLIER REVISION DATES

REVISION DATES: 10-26-13 05-28-14 01-21-14

SHEET 4 OF 17

FILE => 21e0017-c-sp2.dgn

USERNAME => s126530 DATE PLOTTED => 09-JUL-2014 TIME PLOTTED => 10:23

DIST	COUNTY	ROUTE	POST MILES TOTAL PROJECT	SHEET No.	TOTAL SHEETS
04	Nap	29	47.0/47.2	134	146

Mary K Beall 3/15/14
REGISTERED CIVIL ENGINEER DATE

June 23, 2014
PLANS APPROVAL DATE

REGISTERED PROFESSIONAL ENGINEER
MARY K. BEALL
No. 76357
Exp. 12-31-2014
CIVIL
STATE OF CALIFORNIA

The State of California or its officers or agents shall not be responsible for the accuracy or completeness of scanned copies of this plan sheet.

NOTES:
1. Top of wall elevations shall be verified in the field.
2. The Contractor shall field locate all utilities before drilling.
3. For limits of clean and paint steel soldier piling, see "TYPICAL SECTION" on "SOLDIER PILE WALL DETAILS" sheet.
4. For Layout of Pile Number in Table and for number of timber lagging members in wall between piles, see "STRUCTURE PLAN NO. 1" & "STRUCTURE PLAN NO. 2" sheets.

* Top of Wall Elevation = Profile Grade (PG) Elev., For location see "STRUCTURE CONCRETE BARRIER SLAB DETAILS" sheet.

PILE NUMBER	STATION ALONG "RW1" LINE	TOP OF WALL ELEVATION (ft.) *	Approx OG ELEVATION (ft.)	Approx FG ELEVATION (ft.)	TOP OF STEEL PILE Elev. (ft.)	TIP ELEVATION (ft.)	PILE TYPE
1	10+00	1761.17	1759.57	1757.70	1759.42	1725.92	W14X176
2	10+08	1760.59	1757.53	1755.85	1758.84	1725.34	W14X176
3	10+16	1760.01	1755.91	1754.03	1758.26	1724.76	W14X176
4	10+24	1759.41	1754.05	1752.16	1757.66	1714.16	W14X233
5	10+32	1758.82	1752.25	1750.29	1757.07	1713.57	W14X233
6	10+40	1758.22	1750.85	1748.64	1756.47	1712.97	W14X233
7	10+48	1757.62	1749.71	1747.49	1755.87	1712.37	W14X233
8	10+56	1757.02	1748.61	1746.40	1755.27	1711.77	W14X233
9	10+64	1756.42	1747.72	1745.52	1754.67	1711.17	W14X233
10	10+72	1755.82	1746.98	1744.80	1754.07	1710.57	W14X233
11	10+80	1755.22	1746.09	1744.02	1753.47	1709.97	W14X233
12	10+88	1754.62	1745.08	1743.02	1752.87	1709.37	W14X233
13	10+96	1754.02	1744.69	1742.03	1752.27	1708.77	W14X233
14	11+04	1753.42	1744.30	1741.67	1751.67	1708.17	W14X233
15	11+12	1752.82	1743.91	1741.90	1751.07	1707.57	W14X233
16	11+20	1752.22	1743.59	1741.96	1750.47	1706.97	W14X233
17	11+28	1751.62	1742.85	1741.22	1749.87	1706.37	W14X233
18	11+36	1751.03	1742.12	1740.40	1749.28	1705.78	W14X233
19	11+44	1750.43	1740.68	1739.24	1748.68	1705.18	W14X233
20	11+52	1749.83	1739.17	1738.26	1748.08	1704.58	W14X233
21	11+60	1749.23	1739.61	1738.81	1747.48	1703.98	W14X233
22	11+68	1748.63	1741.25	1740.02	1746.88	1703.38	W14X233
23	11+76	1748.03	1741.64	1740.18	1746.28	1712.78	W14X176
24	11+84	1747.43	1741.42	1739.88	1745.68	1712.18	W14X176
25	11+92	1746.83	1741.01	1739.45	1745.08	1711.58	W14X176

PILE NUMBER	STATION ALONG "RW1" LINE	TOP OF WALL ELEVATION (ft.) *	Approx OG ELEVATION (ft.)	Approx FG ELEVATION (ft.)	TOP OF STEEL PILE Elev. (ft.)	TIP ELEVATION (ft.)	PILE TYPE
26	12+00	1746.23	1740.76	1739.02	1744.48	1710.98	W14X176
27	12+08	1745.63	1740.51	1738.60	1743.88	1710.38	W14X176
28	12+16	1745.03	1740.26	1738.48	1743.28	1709.78	W14X176
29	12+24	1744.43	1740.23	1738.31	1742.68	1709.18	W14X176
30	12+32	1743.83	1739.86	1737.87	1742.08	1708.58	W14X176
31	12+40	1743.23	1739.13	1737.13	1741.48	1707.98	W14X176
32	12+48	1742.63	1738.11	1736.40	1740.88	1707.38	W14X176
33	12+56	1742.03	1736.59	1735.37	1740.28	1706.78	W14X176
34	12+64	1741.43	1735.18	1734.20	1739.68	1706.18	W14X176
35	12+72	1740.83	1734.14	1733.08	1739.08	1705.58	W14X176
36	12+80	1740.22	1733.12	1732.09	1738.47	1702.97	W14X176
37	12+88	1739.60	1732.08	1731.05	1737.85	1702.35	W14X176
38	12+96	1738.97	1731.05	1730.11	1737.22	1701.72	W14X176
39	13+04	1738.34	1730.01	1729.22	1736.59	1701.09	W14X176
40	13+12	1737.71	1728.97	1728.36	1735.56	1700.06	W14X176
41	13+20	1737.08	1728.54	1727.45	1735.33	1699.83	W14X176
42	13+28	1736.46	1728.11	1727.12	1734.71	1699.21	W14X176
43	13+36	1735.85	1727.39	1726.62	1733.99	1698.48	W14X176
44	13+42.16	1734.25	1725.99	1725.69	1732.50	1697.00	W14X176
45	13+48.32	1731.20	1725.00	1725.00	1729.45	1695.95	W14X176
46	13+54.48	1728.31	1723.52	1723.52	1726.56	1693.06	W14X176
47	13+60.64	1725.40	1722.77	1722.77	1723.65	1690.15	W14X176

NOTE:
THE CONTRACTOR SHALL VERIFY ALL CONTROLLING FIELD DIMENSIONS BEFORE ORDERING OR FABRICATING ANY MATERIAL.

	BY	CHECKED
DESIGN	Mary Beall	John Tjoelker
DETAILS	Carlo Cancino	M. Beall / J. Tjoelker
QUANTITIES	Mary Beall	John Tjoelker

STATE OF CALIFORNIA
DEPARTMENT OF TRANSPORTATION

DIVISION OF ENGINEERING SERVICES
STRUCTURE DESIGN
DESIGN BRANCH 8

BRIDGE NO. 21E0017
POST MILE 47.04

TROUTDALE CREEK RETAINING WALL 1
SOLDIER PILE WALL DATA TABLE

STRUCTURES DESIGN DETAIL SHEET (ENGLISH) (REV. 09-01-10)

ORIGINAL SCALE IN INCHES FOR REDUCED PLANS 0 1 2 3

UNIT: 3593
PROJECT NUMBER & PHASE: 0400001104, 1
CONTRACT NO.: 04-4a0901

DISREGARD PRINTS BEARING EARLIER REVISION DATES

REVISION DATES: 10-16-13 01-14-14 12-05-13

SHEET 5 OF 17

FILE => 21e0017-d-spwdata.dgn

USERNAME => s128530 DATE PLOTTED => 09-JUL-2014 TIME PLOTTED => 10:25

DIST	COUNTY	ROUTE	POST MILES TOTAL PROJECT	SHEET No.	TOTAL SHEETS
04	Nap	29	47.0/47.2	135	146

Mary K Beall 3/15/14
REGISTERED CIVIL ENGINEER DATE

June 23, 2014
PLANS APPROVAL DATE

REGISTERED PROFESSIONAL ENGINEER MARY K. BEALL No. 76357 Exp. 12-31-2014 CIVIL STATE OF CALIFORNIA

The State of California or its officers or agents shall not be responsible for the accuracy or completeness of electronic copies of this plan sheet.

CURVE DATA

No.	R	Δ	T	L
A	165.00	109°12'42"	232.23	314.51
B	382.11	09°24'15"	31.43	62.72
C	11.22	154°07'42"	48.86	30.19

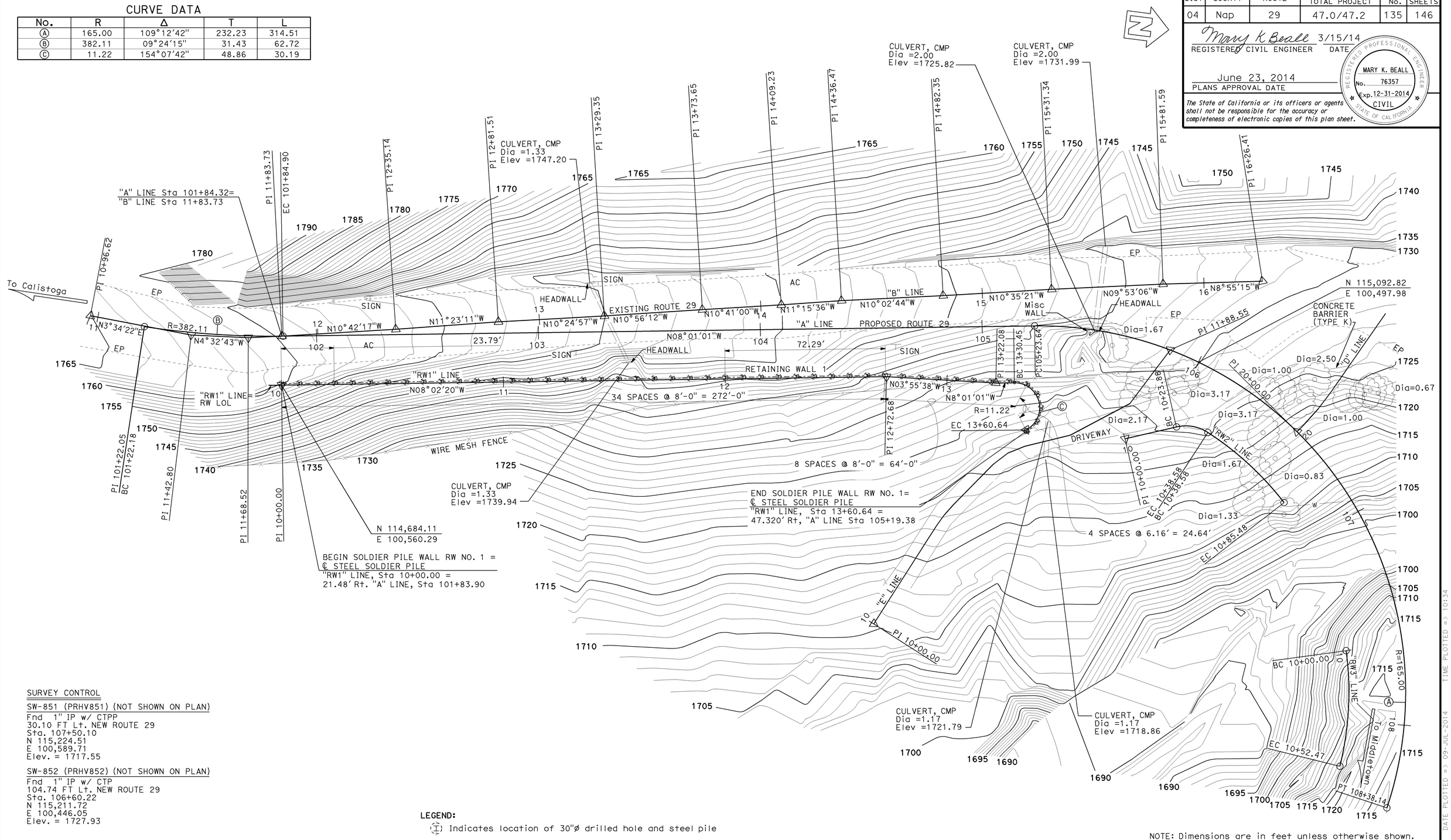

SURVEY CONTROL

SW-851 (PRHV851) (NOT SHOWN ON PLAN)
Fnd 1" IP w/ CTPP
30.10 FT Lt. NEW ROUTE 29
Sta. 107+50.10
N 115,224.51
E 100,589.71
Elev. = 1717.55

SW-852 (PRHV852) (NOT SHOWN ON PLAN)
Fnd 1" IP w/ CTP
104.74 FT Lt. NEW ROUTE 29
Sta. 106+60.22
N 115,211.72
E 100,446.05
Elev. = 1727.93

LEGEND:
Indicates location of 30"Ø drilled hole and steel pile

NOTE: Dimensions are in feet unless otherwise shown.

PRELIMINARY INVESTIGATION SECTION

SCALE	VERT.DATUM NGVD29	PHOTOGRAMMETRY AS OF: X			
1"=20'	HORZ.DATUM ARBITRARY	SURVEYED	BY DISTRICT/PI	CHECKED	BY D. IVY 04/2013
ALIGNMENT TIES Dist TRAVERSE SHEET		DRAFTED	BY T. ZOLNIKOV 04/2013	CHECKED	BY S. SOU 04/2013

	BY	CHECKED
DESIGN	Mary Beall	John Tjoelker
DETAILS	Carlo Cancino	M. Beall / J. Tjoelker
QUANTITIES	Mary Beall	John Tjoelker

STATE OF CALIFORNIA
DEPARTMENT OF TRANSPORTATION

DIVISION OF ENGINEERING SERVICES
STRUCTURE DESIGN
DESIGN BRANCH 8

BRIDGE NO. 21-RW1
POST MILE 47.11

TROUTDALE CREEK RETAINING WALL 1
FOUNDATION PLAN

STRUCTURES FOUNDATION PLAN SHEET (ENGLISH) (REV. 09-01-10)

ORIGINAL SCALE IN INCHES FOR REDUCED PLANS 0 1 2 3

UNIT: 3646
PROJECT NUMBER & PHASE: 0400001104, 1 CONTRACT NO.: 04-4A0901

DISREGARD PRINTS BEARING EARLIER REVISION DATES

REVISION DATES 04/14/13 12/09/13 10/28/13

SHEET 6 OF 17

FILE => 21e0017-e-fpl01.dgn

USERNAME => s128530 DATE PLOTTED => 09-JUL-2014 TIME PLOTTED => 10:34

DIST	COUNTY	ROUTE	POST MILES TOTAL PROJECT	SHEET No.	TOTAL SHEETS
04	Nap	29	47.0/47.2	136	146

Mary K Beall 3/15/14
REGISTERED CIVIL ENGINEER DATE

June 23, 2014
PLANS APPROVAL DATE

REGISTERED PROFESSIONAL ENGINEER MARY K. BEALL No. 76357 Exp. 12-31-2014 CIVIL STATE OF CALIFORNIA

The State of California or its officers or agents shall not be responsible for the accuracy or completeness of scanned copies of this plan sheet.

LEGEND:

- Indicates lean concrete removal
- Indicates 2" min expanded polystyrene
- Indicates 1" expanded polystyrene
- Indicates 1" thick elastomeric bearing pad

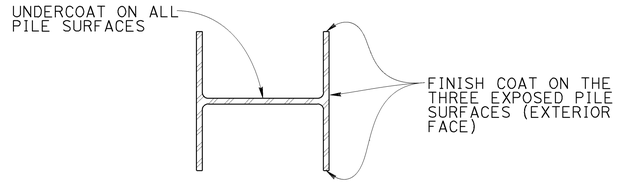

LIMITS OF CLEAN & PAINT STEEL SOLDIER PILE

No Scale

NOTE:
For details not shown, see RSP B11-56

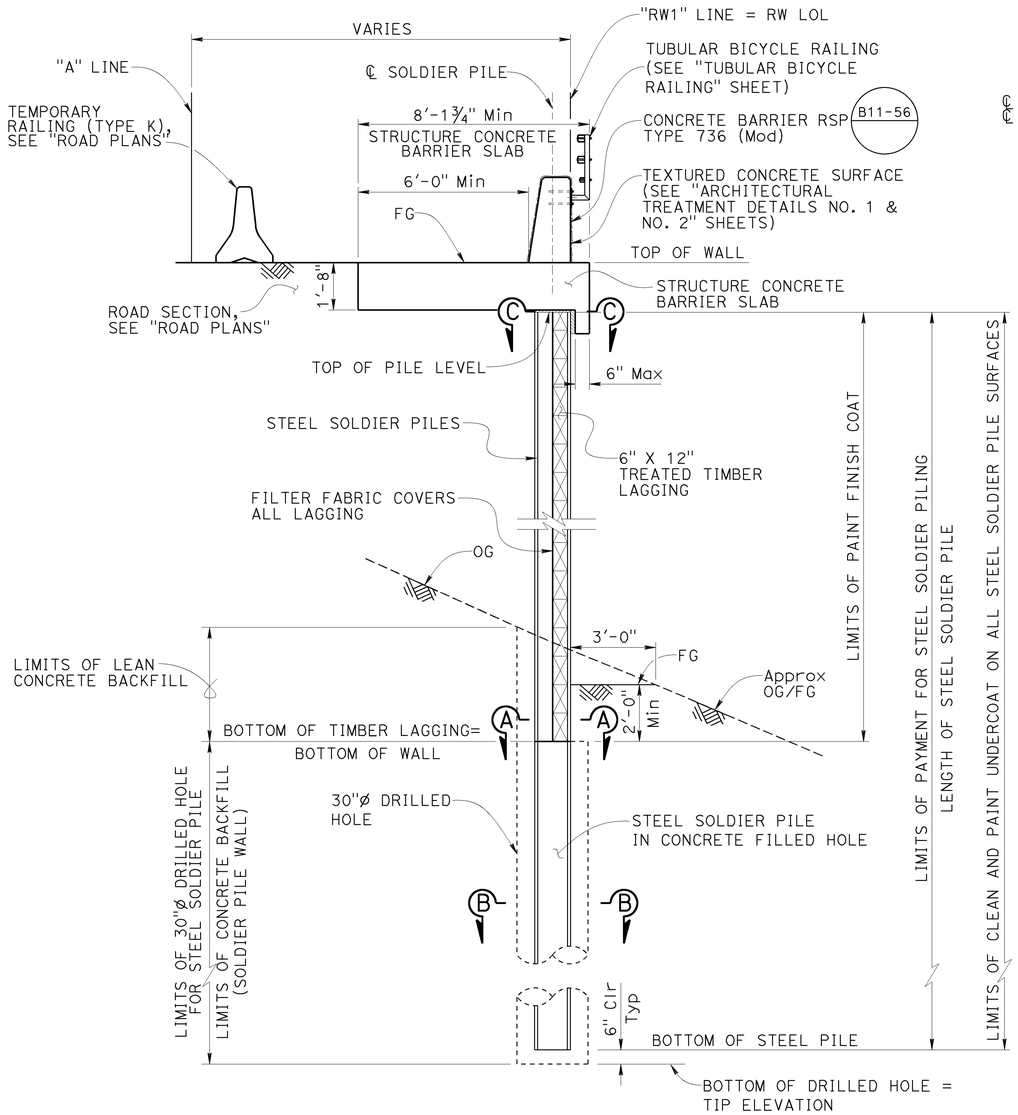

TYPICAL SECTION

⅜" = 1'-0"

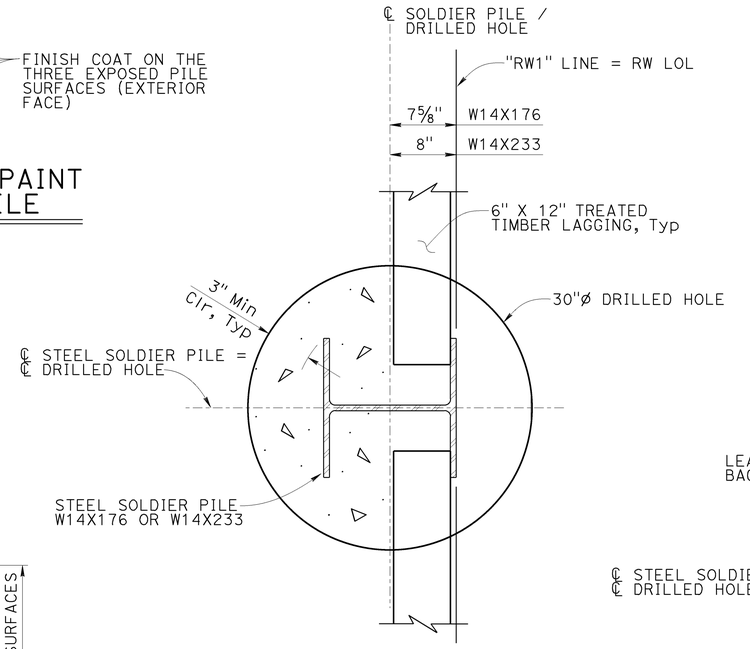

SOLDIER PILE AND DRILLED HOLE LAYOUT

No Scale

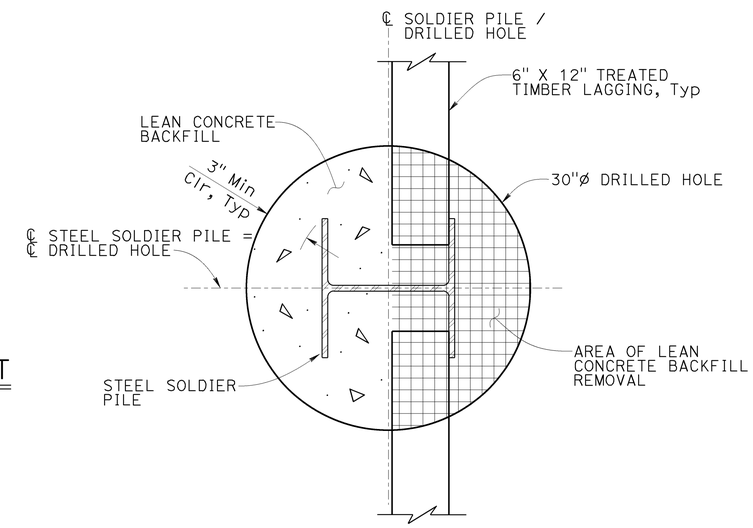

SECTION A-A

No Scale

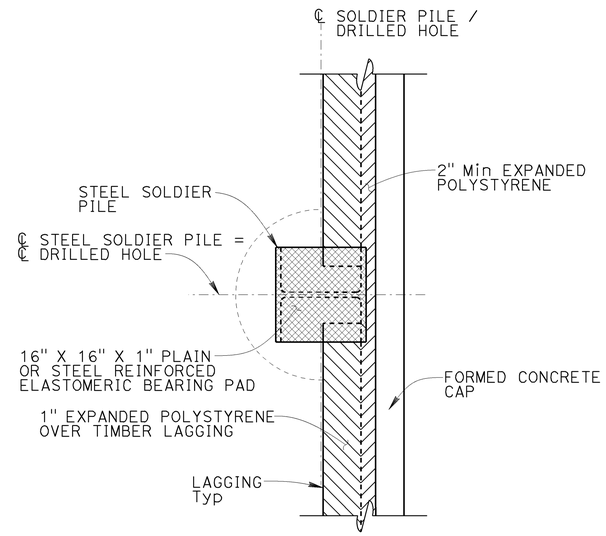

SECTION C-C

No Scale

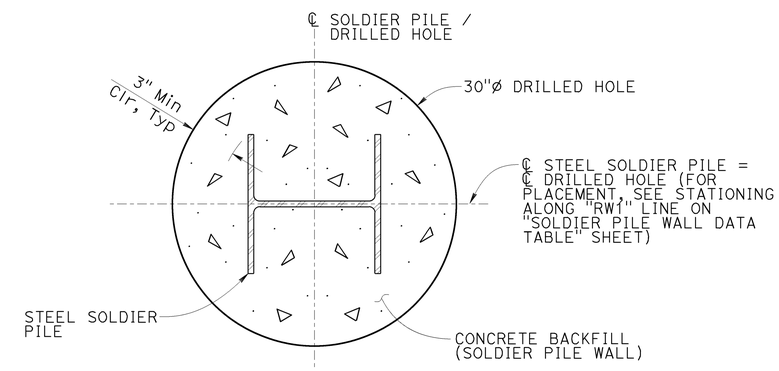

SECTION B-B

No Scale

DESIGN	BY Mary Beall	CHECKED John Tjoelker	
DETAILS	BY Carlo Cancino	CHECKED M. Beall / J. Tjoelker	
QUANTITIES	BY Mary Beall	CHECKED John Tjoelker	

STATE OF CALIFORNIA
DEPARTMENT OF TRANSPORTATION

DIVISION OF ENGINEERING SERVICES
STRUCTURE DESIGN
DESIGN BRANCH 8

BRIDGE NO. 21E0017
POST MILE 47.04

TROUTDALE CREEK RETAINING WALL 1
WALL DETAILS NO. 1

STRUCTURES DESIGN DETAIL SHEET (ENGLISH) (REV. 09-01-10)

ORIGINAL SCALE IN INCHES FOR REDUCED PLANS 0 1 2 3

UNIT: 3593
PROJECT NUMBER & PHASE: 0400001104, 1
CONTRACT NO.: 04-4a0901

DISREGARD PRINTS BEARING EARLIER REVISION DATES

REVISION DATES: 10-28-13 01-14-14 01-21-14

SHEET 7 OF 17

FILE => 21e0017-f-spwdet01.dgn

USERNAME => s126530 DATE PLOTTED => 09-JUL-2014 TIME PLOTTED => 10:40

DIST	COUNTY	ROUTE	POST MILES TOTAL PROJECT	SHEET No.	TOTAL SHEETS
04	Nap	29	47.0/47.2	137	146

Mary K Beall 5/28/14
REGISTERED CIVIL ENGINEER DATE

June 23, 2014
PLANS APPROVAL DATE

REGISTERED PROFESSIONAL ENGINEER MARY K. BEALL No. 76357 Exp. 12-31-2014 CIVIL STATE OF CALIFORNIA

The State of California or its officers or agents shall not be responsible for the accuracy or completeness of scanned copies of this plan sheet.

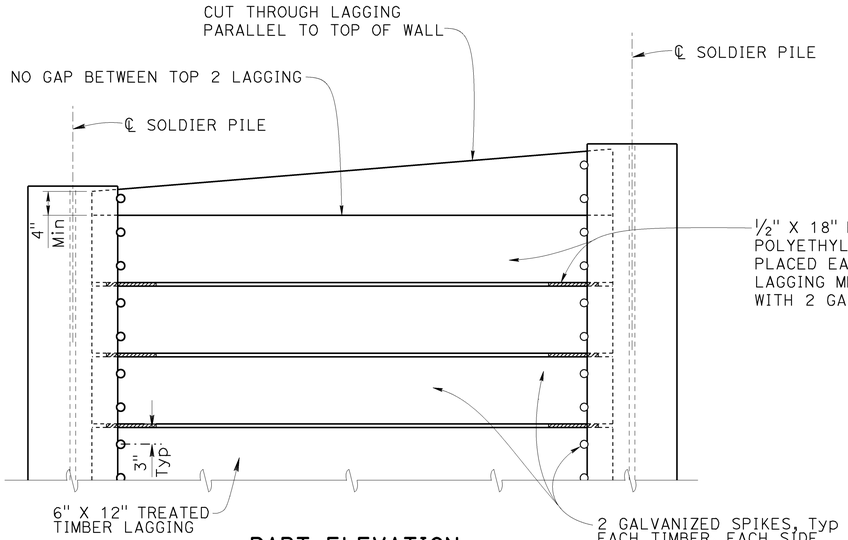

PART ELEVATION

LAGGING DETAILS (ALTERNATIVE 1)

No Scale

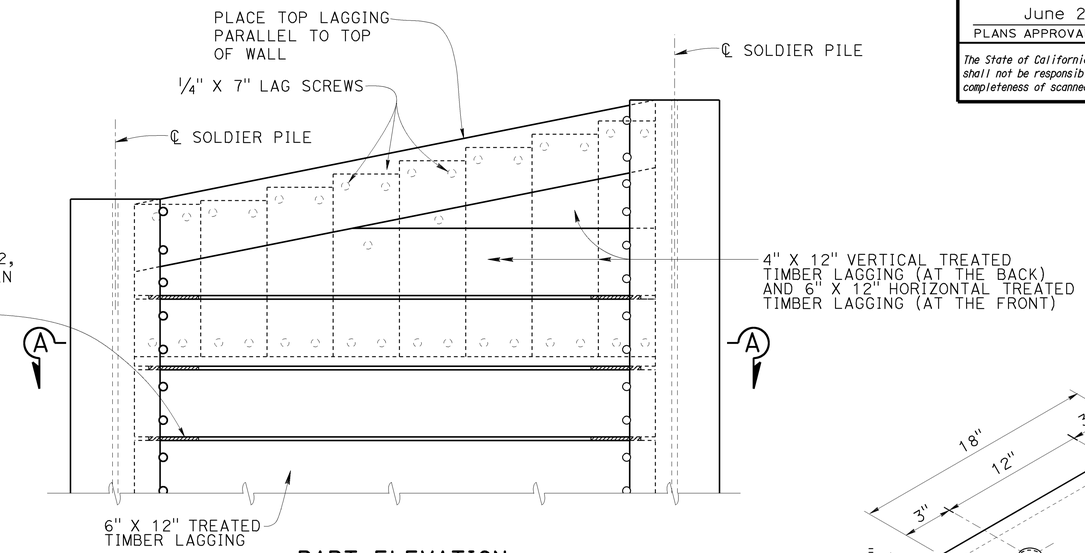

PART ELEVATION

LAGGING DETAILS (ALTERNATIVE 2)

No Scale

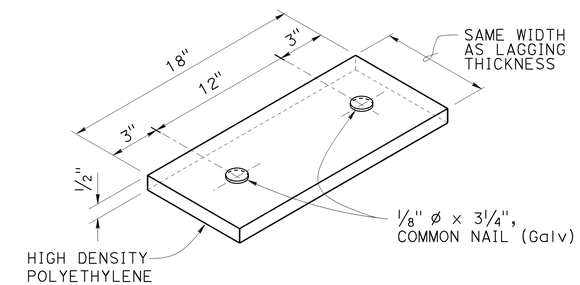

SHIM DETAIL

No Scale

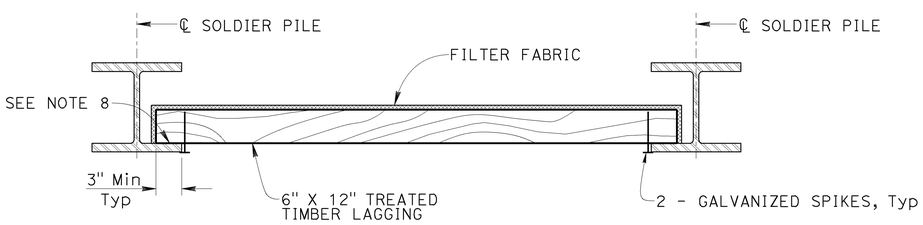

PART PLAN (TYP)

No Scale

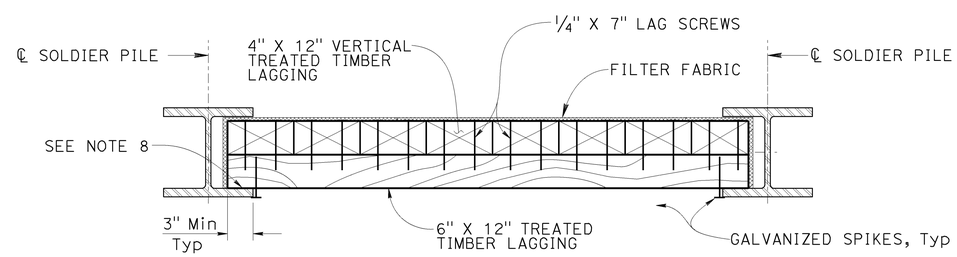

SECTION A-A

No Scale

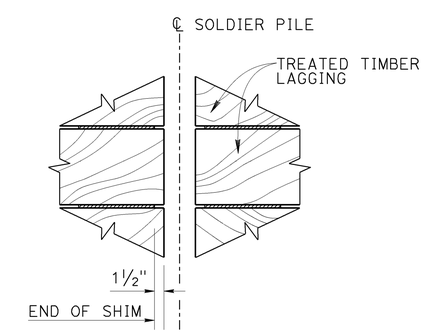

PART ELEVATION

No Scale

NOTES:
1. No clipping of timber lagging corners allowed.
2. Use ¼" x 7" lag screws for 4" x 12" lagging and partial of 6" x 12" lagging as shown in "LAGGING DETAILS (ALTERNATIVE 2)".
3. Use 40d Galv spikes for 6" x 12" lagging.
4. Spikes, screws and nails shall not be bent.
5. First timber lagging to be placed with full bearing.
6. Timber lagging to be treated on all sides.
7. Minimum edge distance of lag screws must be 2½" to any lagging member.
8. All timber lagging to be place with full bearing against soldier pile flanges.

LAGGING DETAILS

No Scale

	BY	CHECKED
DESIGN	Mary Beall	John Tjoelker
DETAILS	Carlo Cancino	M. Beall / J. Tjoelker
QUANTITIES	Mary Beall	John Tjoelker

STATE OF CALIFORNIA
DEPARTMENT OF TRANSPORTATION

DIVISION OF ENGINEERING SERVICES
STRUCTURE DESIGN
DESIGN BRANCH 8

BRIDGE NO. 21E0017
POST MILE 47.04

TROUTDALE CREEK RETAINING WALL 1
WALL DETAILS NO. 2

STRUCTURES DESIGN DETAIL SHEET (ENGLISH) (REV. 09-01-10)

ORIGINAL SCALE IN INCHES FOR REDUCED PLANS 0 1 2 3

UNIT: 3593
PROJECT NUMBER & PHASE: 0400001104, 1
CONTRACT NO.: 04-4a0901

DISREGARD PRINTS BEARING EARLIER REVISION DATES

REVISION DATES 10-28-13 05-28-14 01-21-14 SHEET 8 OF 17

FILE => 21e0017-f-spwdet02.dgn

USERNAME => s128530 DATE PLOTTED => 09-JUL-2014 TIME PLOTTED => 10:42

DIST	COUNTY	ROUTE	POST MILES TOTAL PROJECT	SHEET No.	TOTAL SHEETS
04	Nap	29	47.0/47.2	138	146

Mary K Beall 5/28/14
REGISTERED CIVIL ENGINEER DATE

June 23, 2014
PLANS APPROVAL DATE

REGISTERED PROFESSIONAL ENGINEER MARY K. BEALL No. 76357 Exp. 12-31-2014 CIVIL STATE OF CALIFORNIA

The State of California or its officers or agents shall not be responsible for the accuracy or completeness of scanned copies of this plan sheet.

NOTE:
FOR LOCATION AND ELEVATION OF G2 DRAINAGE INLET (DI) AND 18"ø WELDED STEEL PIPE, SEE "ROAD PLANS".

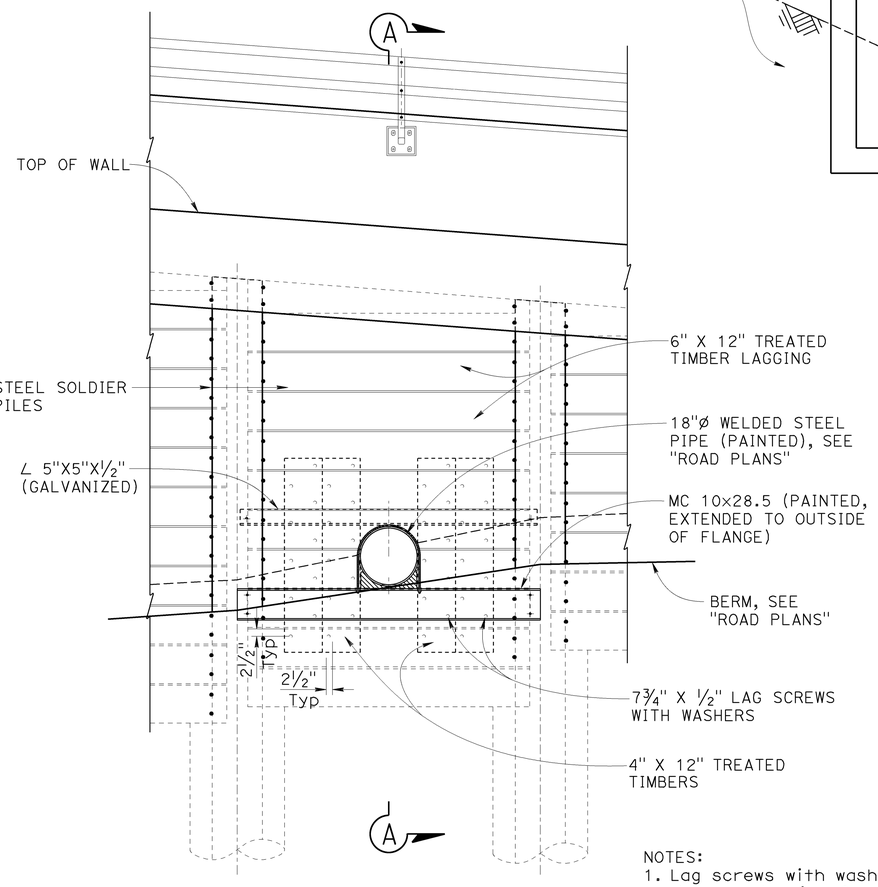

PART ELEVATION
½" = 1'-0"

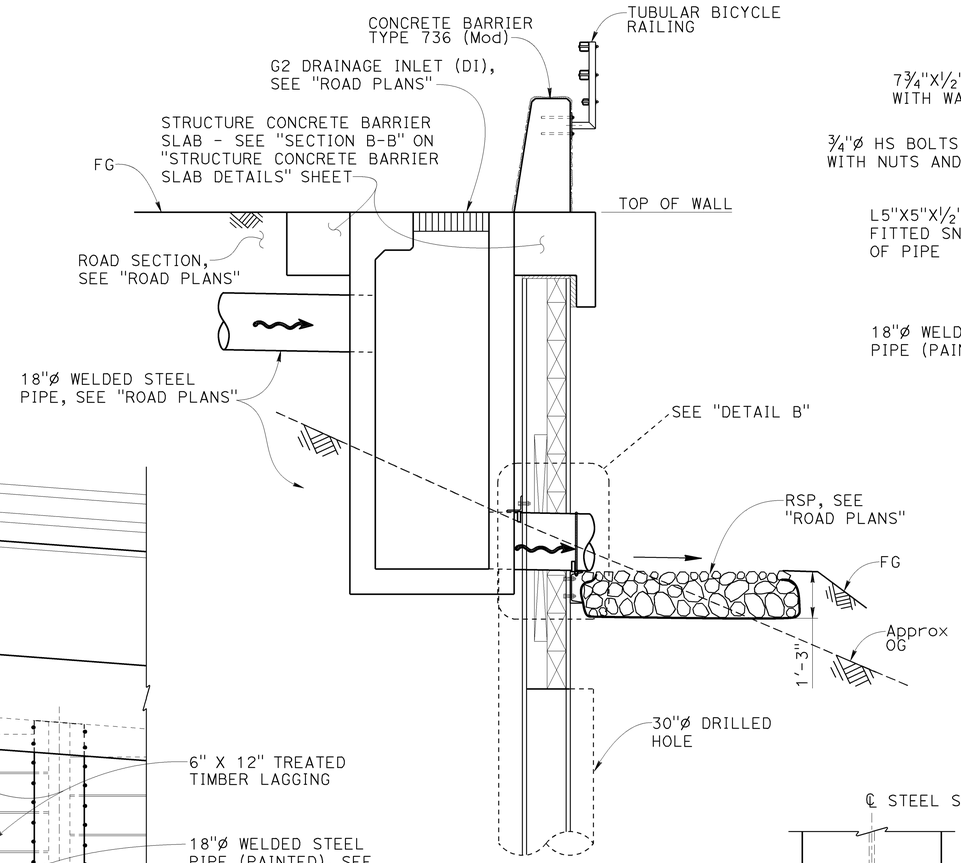

SECTION A-A
½" = 1'-0"

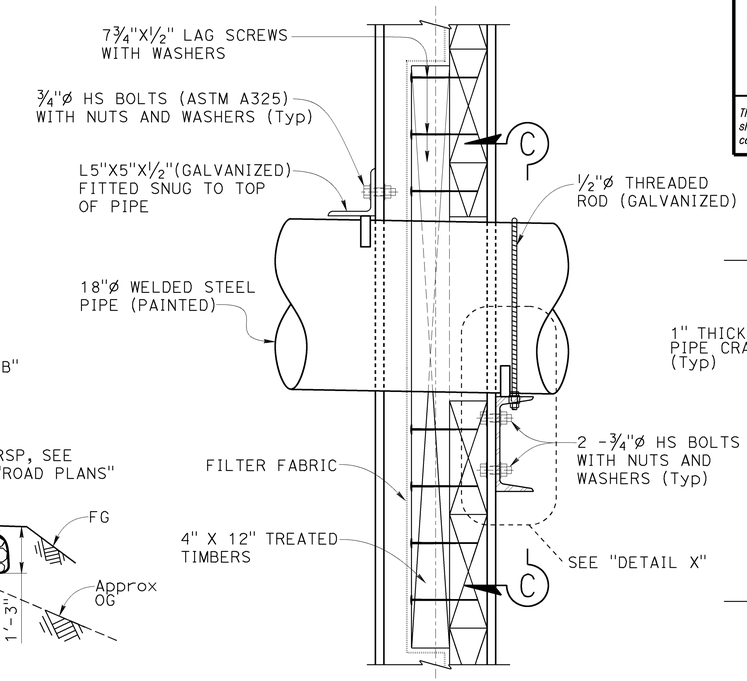

DETAIL B
1½" = 1'-0"

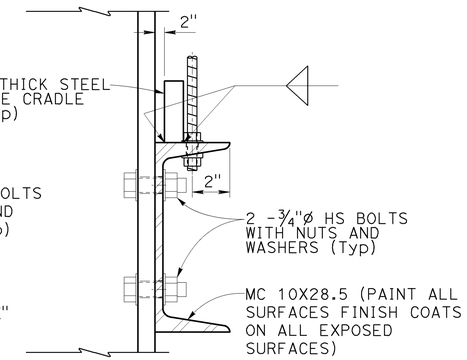

DETAIL X
3" = 1'-0"

NOTE:
18"ø WELDED STEEL PIPE (NOT SHOWN)

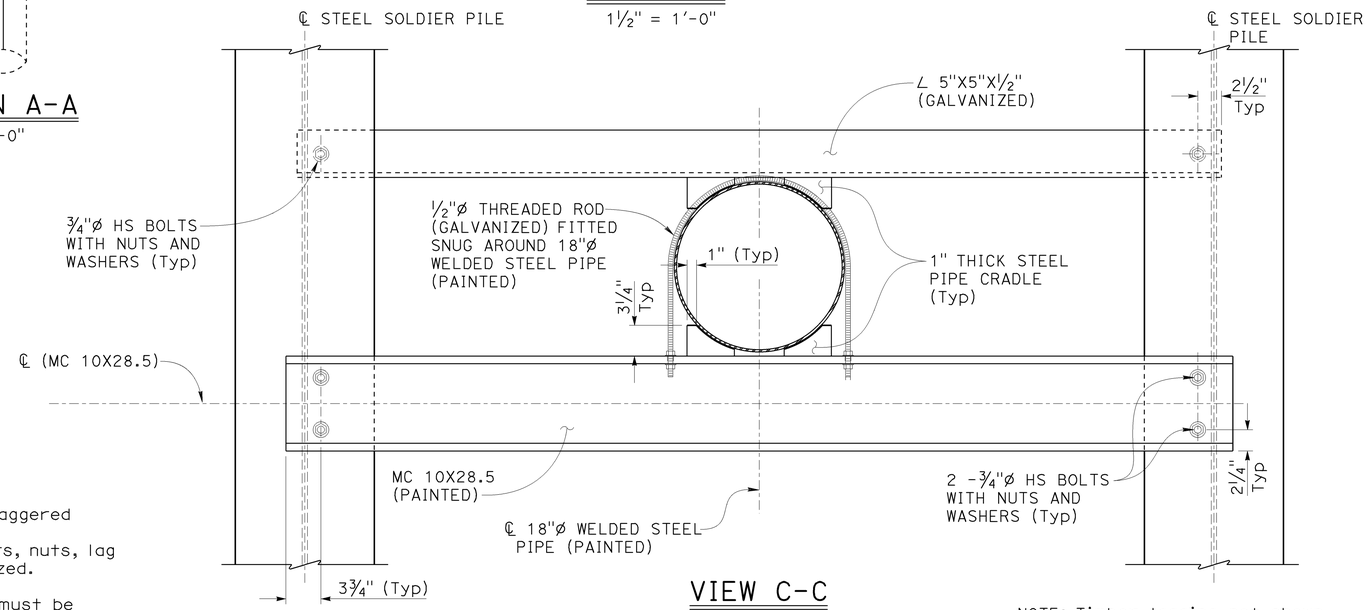

VIEW C-C
1½" = 1'-0"

NOTE: Timber lagging not shown.

NOTES:
1. Lag screws with washers are to be staggered two per lagging for each timber.
2. All Miscellaneous metals, bolts, washers, nuts, lag screws, threaded rods will be galvanized.
3. Lag screws not to be bent.
4. Minimum edge distance of lag screws must be 2½" to any lagging member.

	BY	CHECKED
DESIGN	Mary Beall	John Tjoelker
DETAILS	Carlo Cancino	M. Beall / J. Tjoelker
QUANTITIES	Mary Beall	John Tjoelker

STATE OF CALIFORNIA
DEPARTMENT OF TRANSPORTATION

DIVISION OF ENGINEERING SERVICES
STRUCTURE DESIGN
DESIGN BRANCH 8

BRIDGE NO. 21E0017
POST MILE 47.04

TROUTDALE CREEK RETAINING WALL 1
DRAINAGE DETAILS

STRUCTURES DESIGN DETAIL SHEET (ENGLISH) (REV. 09-01-10)

ORIGINAL SCALE IN INCHES FOR REDUCED PLANS 0 1 2 3

UNIT: 3593
PROJECT NUMBER & PHASE: 0400001104, 1
CONTRACT NO.: 04-4a0901

DISREGARD PRINTS BEARING EARLIER REVISION DATES

REVISION DATES: 11-07-13 | 01-21-14 | 05-28-14

SHEET 9 OF 17

FILE => 21e0017-g-draindet01.dgn

USERNAME => s128530 DATE PLOTTED => 09-JUL-2014 TIME PLOTTED => 10:46

DIST	COUNTY	ROUTE	POST MILES TOTAL PROJECT	SHEET No.	TOTAL SHEETS
04	Nap	29	47.0/47.2	139	146

Mary K Beall 5/28/14
REGISTERED CIVIL ENGINEER DATE

June 23, 2014
PLANS APPROVAL DATE

REGISTERED PROFESSIONAL ENGINEER MARY K. BEALL No. 76357 Exp. 12-31-2014 CIVIL STATE OF CALIFORNIA

The State of California or its officers or agents shall not be responsible for the accuracy or completeness of scanned copies of this plan sheet.

NOTES:
1. Not all barrier reinforcement shown.
2. No expansion joints in concrete barrier or barrier slab within wall limits.
3. For details not shown, see RSP B11-56 -

LEGEND:
- Indicates 2" min expanded polystyrene
- Indicates 1" expanded polystyrene
- Indicates bundled bars

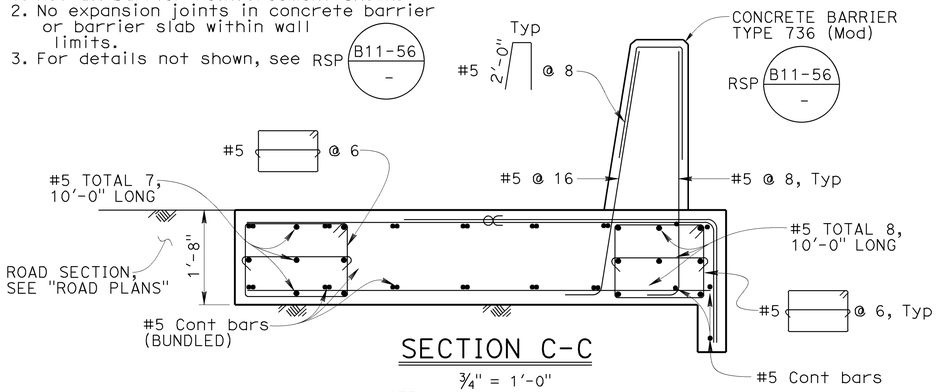

SECTION C-C
¾" = 1'-0"

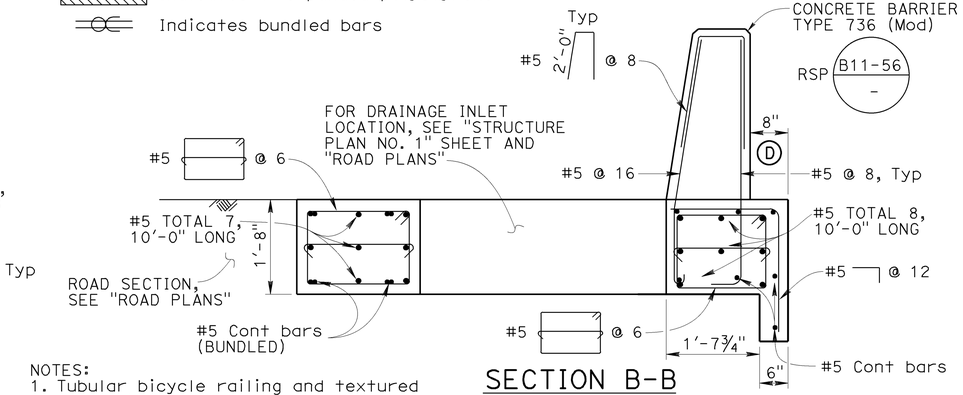

NOTES:
1. Tubular bicycle railing and textured concrete not shown.
2. For drainage inlet detail, see "ROAD PLANS".

SECTION B-B
¾" = 1'-0"

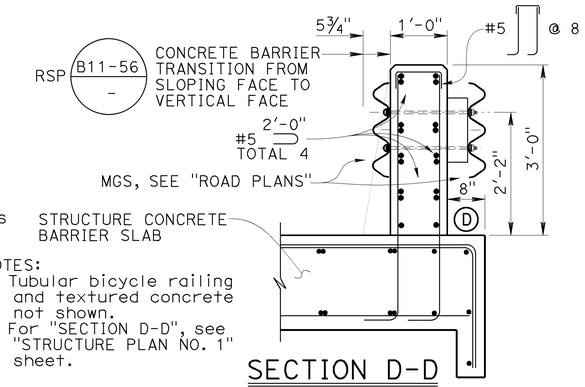

NOTES:
1. Tubular bicycle railing and textured concrete not shown.
2. For "SECTION D-D", see "STRUCTURE PLAN NO. 1" sheet.

SECTION D-D
¾" = 1'-0"

NOTE:
Tubular bicycle railing and textured concrete not shown.

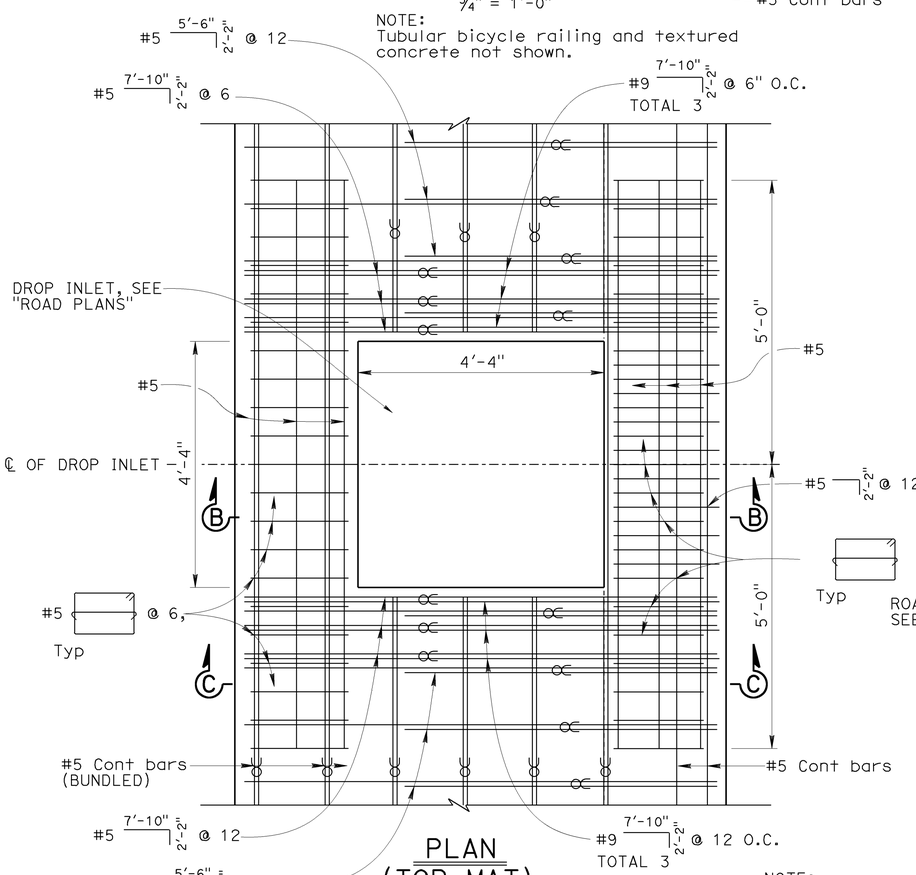

PLAN (TOP MAT)
¾" = 1'-0"

NOTE:
For #5 cont bars, see "STRUCTURE CONCRETE BARRIER SLAB" detail.

STRUCTURE CONCRETE BARRIER SLAB AT DROP INLET LOCATION

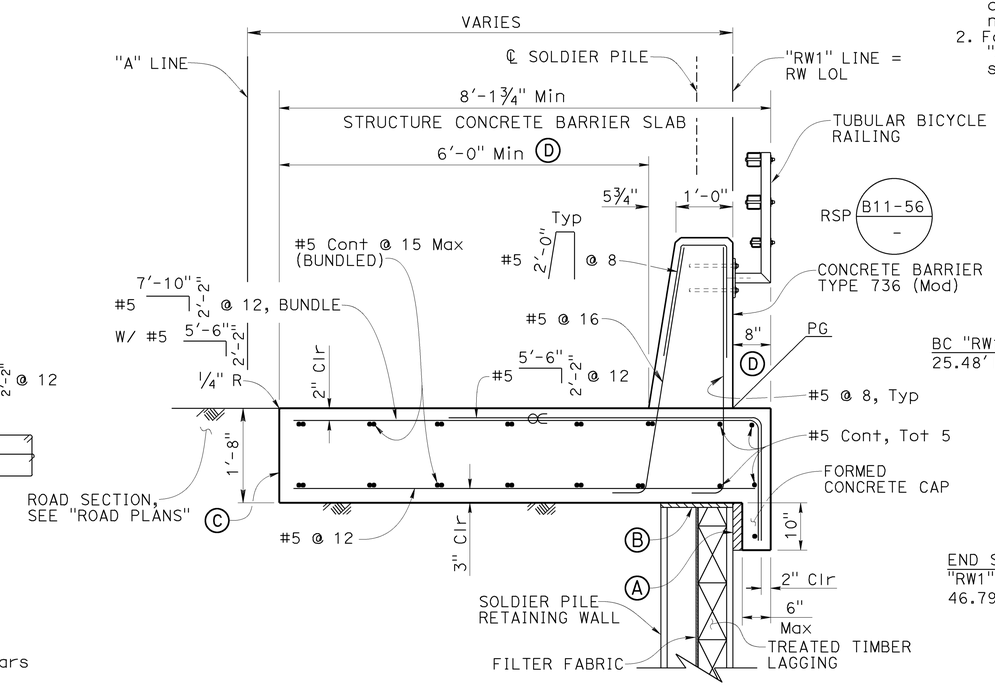

STRUCTURE CONCRETE BARRIER SLAB
¾" = 1'-0"

NOTES:
(A) 2" Min Expanded polystyrene, see "SECTION C-C" in "WALL DETAILS NO.1" sheet.
(B) 1" Expanded Polystyrene or 16" X 16" X 1" Plain or Reinforced Steel Elastomeric Bearing Pad, see "SECTION C-C" in "WALL DETAILS NO.1" sheet, placed level on top of pile.
(C) Contact joint
(D) Dimension to barrier exclude - dimensions of textured concrete

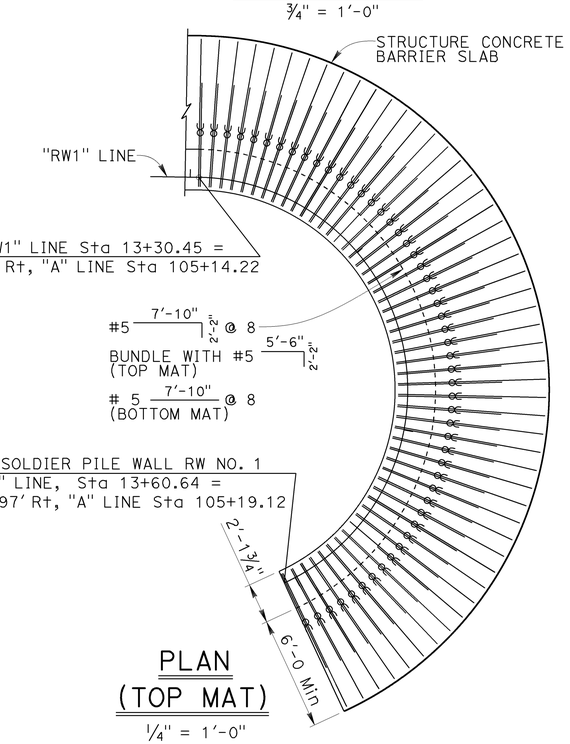

PLAN (TOP MAT)
¼" = 1'-0"

STRUCTURE CONCRETE BARRIER SLAB @ CURVE

	BY	CHECKED
DESIGN	Mary Beall	John Tjoelker
DETAILS	Carlo Cancino	M. Beall / J. Tjoelker
QUANTITIES	Mary Beall	John Tjoelker

STATE OF CALIFORNIA
DEPARTMENT OF TRANSPORTATION

DIVISION OF ENGINEERING SERVICES
STRUCTURE DESIGN
DESIGN BRANCH 8

BRIDGE NO. 21E0017
POST MILE 47.04

TROUTDALE CREEK RETAINING WALL 1
STRUCTURE CONCRETE BARRIER SLAB DETAILS

STRUCTURES DESIGN DETAIL SHEET (ENGLISH) (REV. 09-01-10)

ORIGINAL SCALE IN INCHES FOR REDUCED PLANS 0 1 2 3

UNIT: 3593
PROJECT NUMBER & PHASE: 0400001104, 1 CONTRACT NO.: 04-4a0901

DISREGARD PRINTS BEARING EARLIER REVISION DATES

REVISION DATES: 10-28-13 05-28-14 01-21-14

SHEET 10 OF 17

FILE => 21e0017-g-scbslabdet.dgn

USERNAME => s128530 DATE PLOTTED => 09-JUL-2014 TIME PLOTTED => 10:47

DIST	COUNTY	ROUTE	POST MILES TOTAL PROJECT	SHEET No.	TOTAL SHEETS
04	Nap	29	47.0/47.2	140	146

Mary K Beall 3/15/14
REGISTERED CIVIL ENGINEER DATE

June 23, 2014
PLANS APPROVAL DATE

REGISTERED PROFESSIONAL ENGINEER
MARY K. BEALL
No. 76357
Exp. 12-31-2014
CIVIL
STATE OF CALIFORNIA

The State of California or its officers or agents shall not be responsible for the accuracy or completeness of scanned copies of this plan sheet.

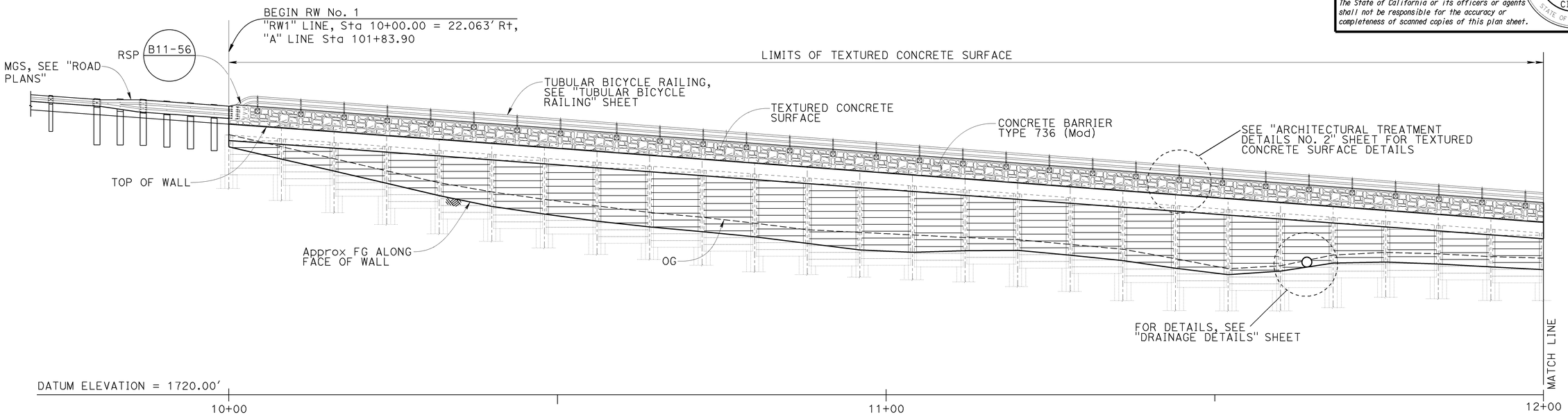

DEVELOPED ELEVATION

1/8" = 1'-0"

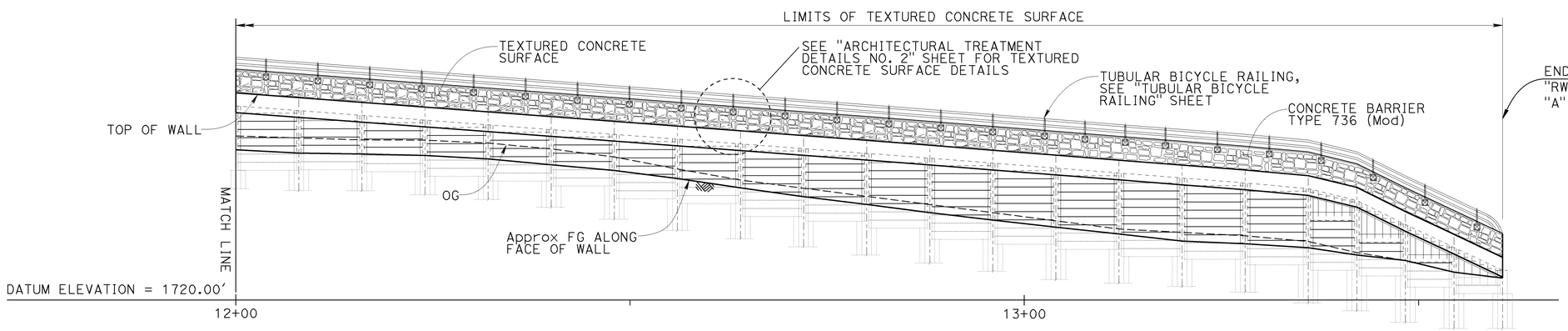

DEVELOPED ELEVATION

1/8" = 1'-0"

NOTES:
1. Apply anti graffiti coating, see "ROAD PLANS".
2. For Details not shown, see RSP B11-56.
3. Prepare and stain concrete surface, see "ROAD PLANS".

DESIGN	BY Valerie Moore	CHECKED M. Beall / J. Tjoelker	
DETAILS	BY Carlo Cancino	CHECKED M. Beall / J. Tjoelker	
QUANTITIES	BY Mary Beall	CHECKED John Tjoelker	

STATE OF CALIFORNIA
DEPARTMENT OF TRANSPORTATION

DIVISION OF ENGINEERING SERVICES
STRUCTURE DESIGN
DESIGN BRANCH 8

BRIDGE NO. 21E0017
POST MILE 47.04

TROUTDALE CREEK RETAINING WALL 1
ARCHITECTURAL TREATMENT DETAILS NO. 1

STRUCTURES DESIGN DETAIL SHEET (ENGLISH) (REV. 09-01-10)

ORIGINAL SCALE IN INCHES FOR REDUCED PLANS 0 1 2 3

UNIT: 3593
PROJECT NUMBER & PHASE: 0400001104, 1
CONTRACT NO.: 04-4a0901

DISREGARD PRINTS BEARING EARLIER REVISION DATES

REVISION DATES: 10-28-13 01-05-14 01-21-14

SHEET 11 OF 17

FILE => 21e0017-h-archtreat1.dgn

USERNAME => s128530 DATE PLOTTED => 09-JUL-2014 TIME PLOTTED => 10:49

DIST	COUNTY	ROUTE	POST MILES TOTAL PROJECT	SHEET No.	TOTAL SHEETS
04	Nap	29	47.0/47.2	141	146

Mary K Beall 3/15/14
REGISTERED CIVIL ENGINEER DATE

June 23, 2014
PLANS APPROVAL DATE

REGISTERED PROFESSIONAL ENGINEER
MARY K. BEALL
No. C76357
Exp. 12/31/14
CIVIL
STATE OF CALIFORNIA

The State of California or its officers or agents shall not be responsible for the accuracy or completeness of scanned copies of this plan sheet.

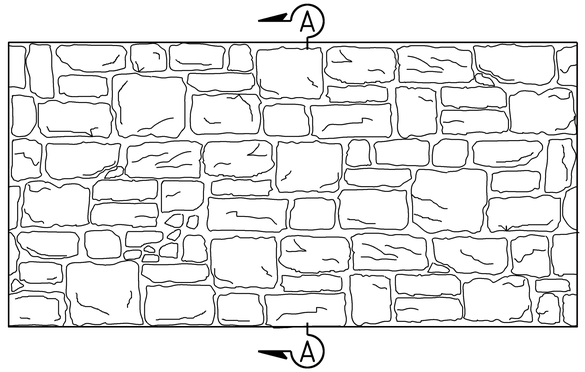

ASHLAR STONE TEXTURE
No Scale

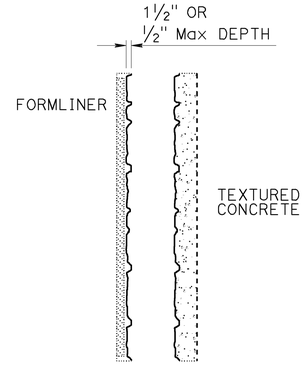

SECTION A-A
No Scale

NOTE:
Architectural Treatment in addition to Type 736 (Mod) shape.

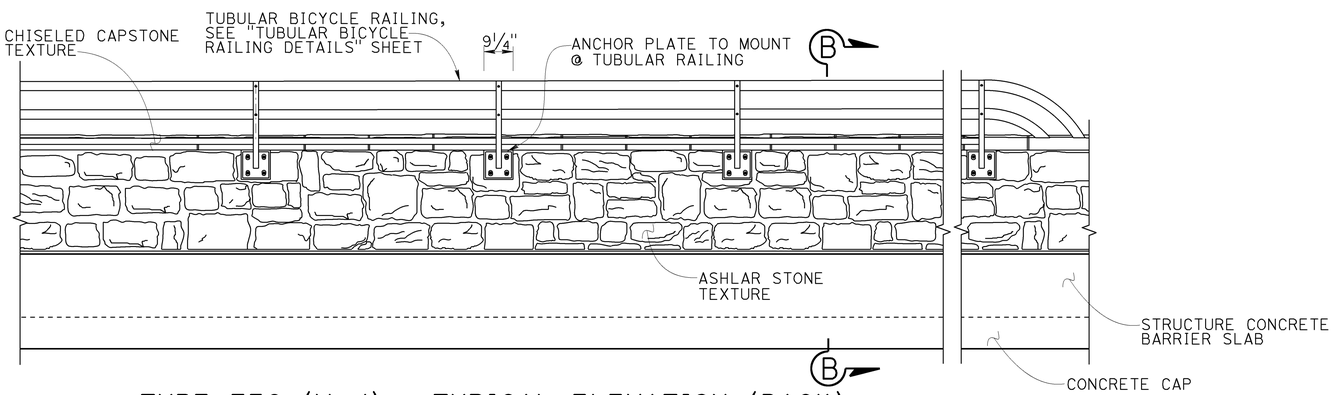

TYPE 736 (Mod) - TYPICAL ELEVATION (BACK)
No Scale

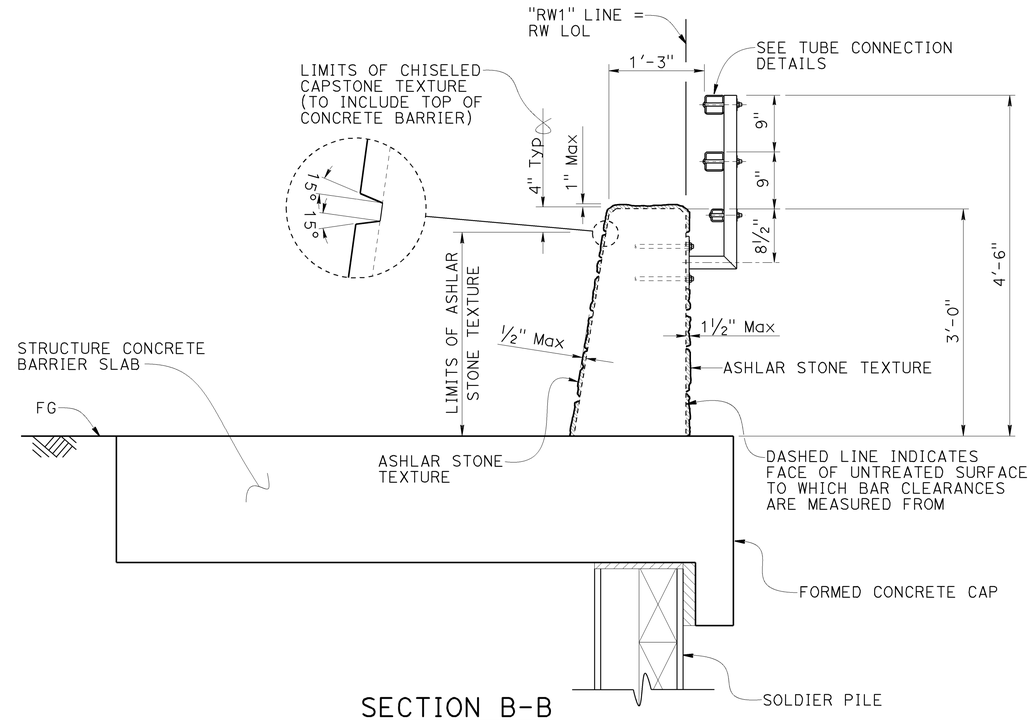

SECTION B-B
ARCHITECTURAL TREATMENT ON TYPE 736 (Mod) AT STRUCTURE CONCRETE BARRIER SLAB AND RETAINING WALL
No Scale

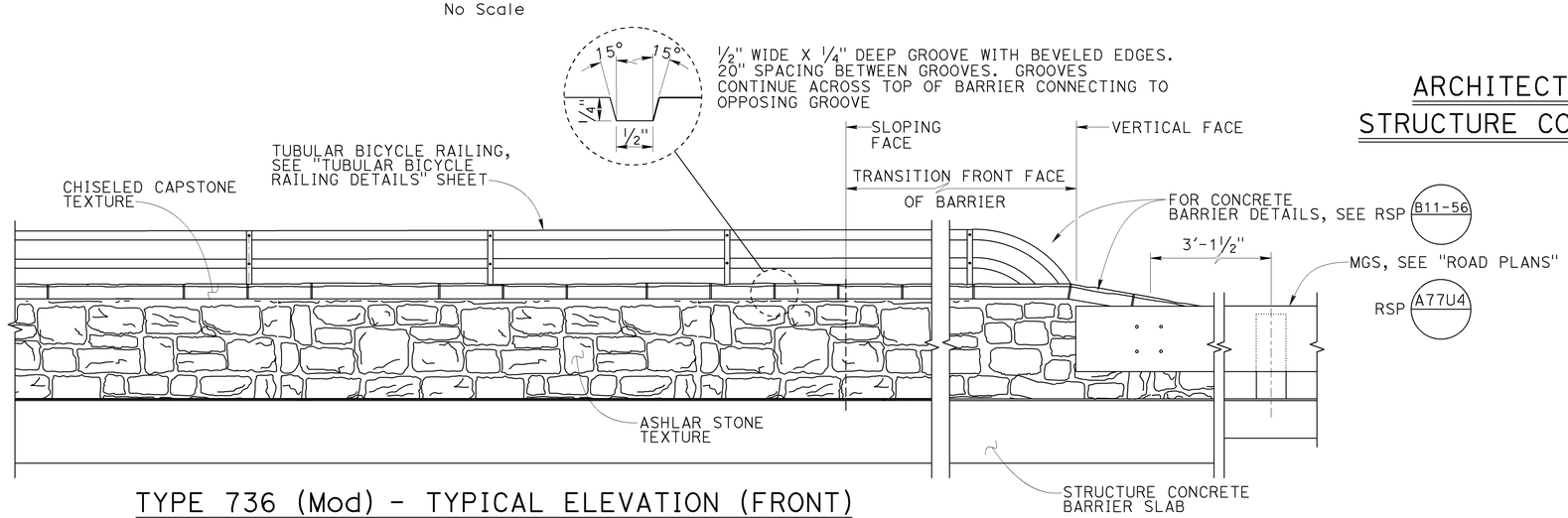

TYPE 736 (Mod) - TYPICAL ELEVATION (FRONT)
No Scale

NOTES:
1. Apply anti graffiti coating, see "ROAD PLANS".
2. For Details not shown, see RSP B11-56 and RSP A77U4 .
3. Prepare and stain concrete surface, see "ROAD PLANS".

	BY	CHECKED
DESIGN	Valerie Moore	M. Beall / J. Tjoelker
DETAILS	Carlo Cancino	M. Beall / J. Tjoelker
QUANTITIES	Mary Beall	John Tjoelker

STATE OF CALIFORNIA
DEPARTMENT OF TRANSPORTATION

DIVISION OF ENGINEERING SERVICES
STRUCTURE DESIGN
DESIGN BRANCH 8

BRIDGE NO. 21E0017
POST MILE 47.04

TROUTDALE CREEK RETAINING WALL 1
ARCHITECTURAL TREATMENT DETAILS NO. 2

STRUCTURES DESIGN DETAIL SHEET (ENGLISH) (REV. 09-01-10)

ORIGINAL SCALE IN INCHES FOR REDUCED PLANS 0 1 2 3

UNIT: 3593
PROJECT NUMBER & PHASE: 0400001104, 1
CONTRACT NO.: 04-4a0901

DISREGARD PRINTS BEARING EARLIER REVISION DATES

REVISION DATES: 09-30-13 01-21-14 12-19-13

SHEET 12 OF 17

FILE => 21e0017-h-archtreat2.dgn

USERNAME => s126530 DATE PLOTTED => 09-JUL-2014 TIME PLOTTED => 10:50

DIST	COUNTY	ROUTE	POST MILES TOTAL PROJECT	SHEET No.	TOTAL SHEETS
04	Nap	29	47.0/47.2	142	146

Mary K Beall 3/15/14
REGISTERED CIVIL ENGINEER DATE

June 23, 2014
PLANS APPROVAL DATE

REGISTERED PROFESSIONAL ENGINEER
MARY K. BEALL
No. C76357
Exp. 12/31/14
CIVIL
STATE OF CALIFORNIA

The State of California or its officers or agents shall not be responsible for the accuracy or completeness of scanned copies of this plan sheet.

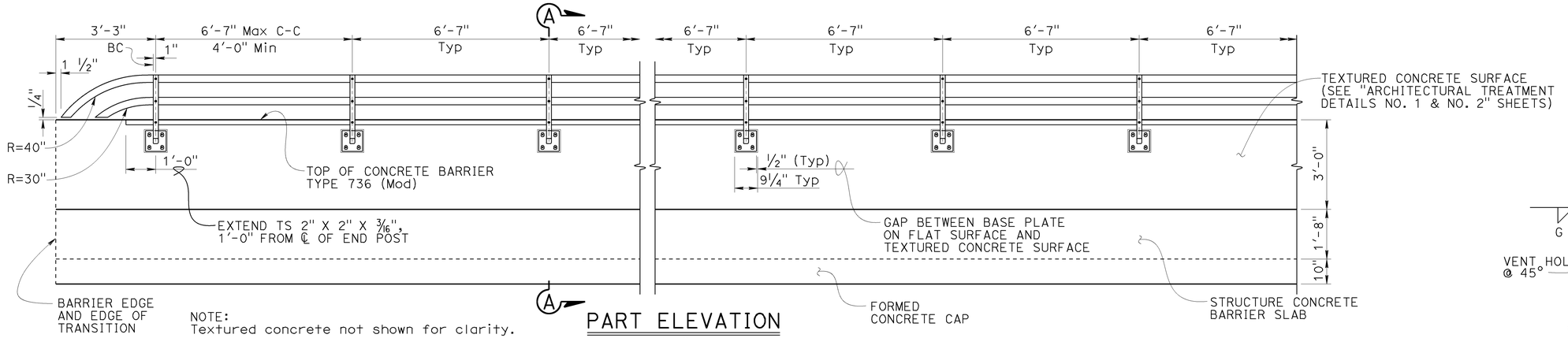

NOTE:
Textured concrete not shown for clarity.

PART ELEVATION
No Scale

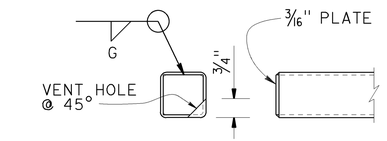

RAIL CAP DETAIL
No Scale

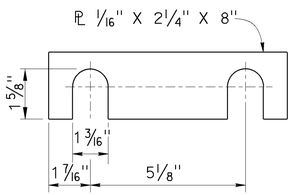

SHIM DETAILS
No Scale

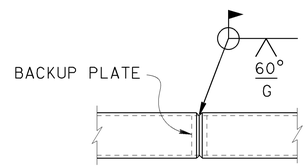

WELDED SPLICE DETAIL
No Scale

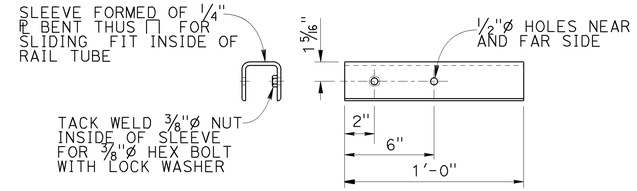

SLEEVE DETAIL
No Scale

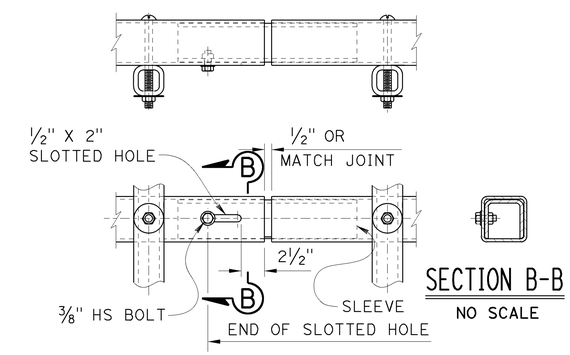

TUBE EXPANSION JOINT DETAILS
No Scale

SECTION B-B
NO SCALE

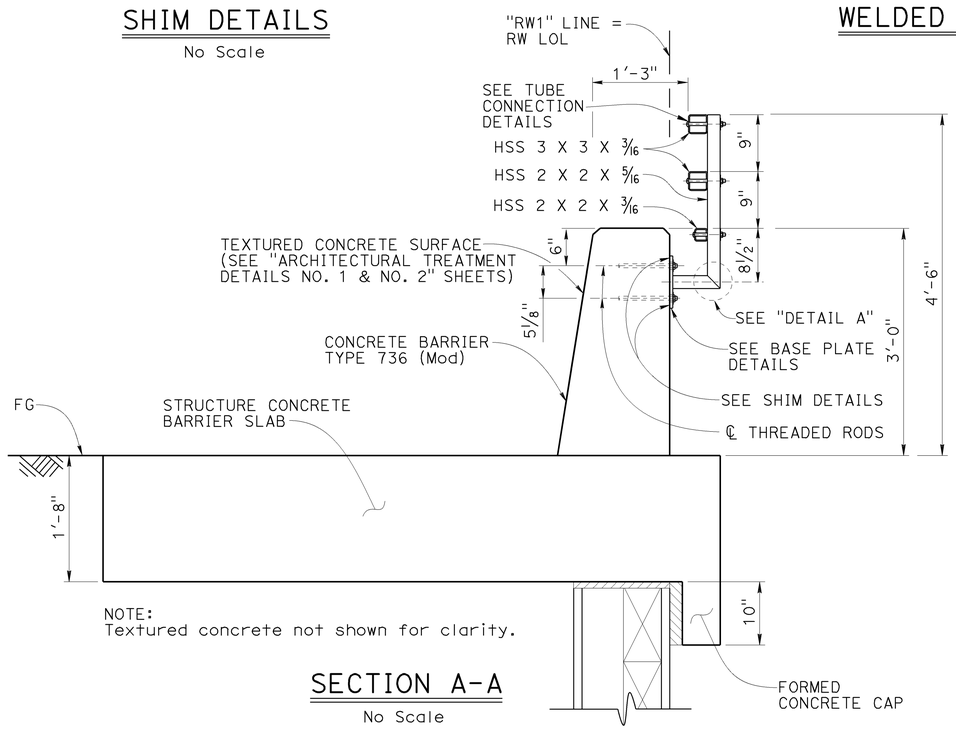

NOTE:
Textured concrete not shown for clarity.

SECTION A-A
No Scale

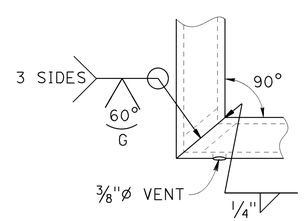

DETAIL A
No Scale

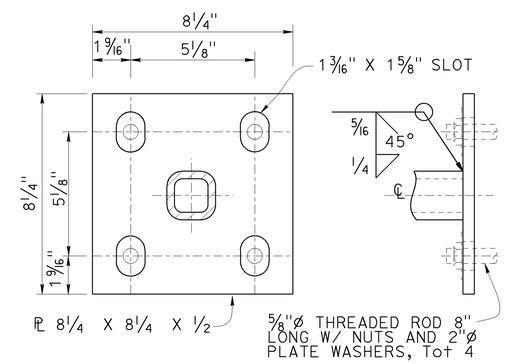

BASE PLATE DETAIL
No Scale

TUBULAR BICYCLE RAILING ON CONCRETE BARRIER TYPE 736 (Mod) WITH STRUCTURE CONCRETE BARRIER SLAB ON SOLDIER PILE WALL

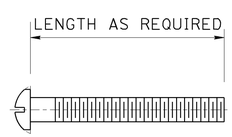

ROUND HEAD SCREW DETAIL
No Scale

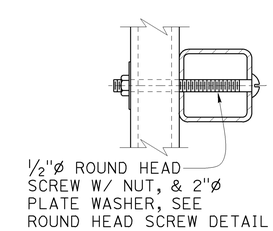

TUBE CONNECTION DETAIL
No Scale

NOTES:

1. Post shall be normal to railing.
2. Rail tubes shall be shop bent or fabricated to fit horizontal curve.
3. Tube splices shall be located in the tubes spanning deck or wall joints. Increase joint width in tubes to match expansion joint width and increase sleeve length correspondingly.
4. Top rail tube shall be continuous over not less than two posts except a short post spacing is permitted near deck or wall joints, electroliers, or other rail discontinuities as noted.
5. See "STRUCTURE PLAN NO.1" and "STRUCTURE PLAN NO.2" for limits of tubular bicycle railing.
6. Base plate to have full bearing.
7. All assemblies are to be galvanized after fabrication.
8. Threaded rods are to be cast in place.
9. Concrete texture must not be applied where base plates are attached. Base plate must be mounted on flat concrete surface.
10. Apply Nating stain to Tubular Bicycle Railing, see "ROAD PLANS".

DESIGN	BY Valerie Moore	CHECKED M. Beall / J. Tjoelker	
DETAILS	BY Carlo Cancino	CHECKED M. Beall / J. Tjoelker	
QUANTITIES	BY Mary Beall	CHECKED John Tjoelker	

STATE OF CALIFORNIA
DEPARTMENT OF TRANSPORTATION

DIVISION OF ENGINEERING SERVICES
STRUCTURE DESIGN
DESIGN BRANCH 8

BRIDGE NO. 21E0017
POST MILE 47.04

TROUTDALE CREEK RETAINING WALL 1
TUBULAR BICYCLE RAILING DETAILS

STRUCTURES DESIGN DETAIL SHEET (ENGLISH) (REV. 09-01-10)

ORIGINAL SCALE IN INCHES FOR REDUCED PLANS 0 1 2 3

UNIT: 3593
PROJECT NUMBER & PHASE: 0400001104, 1
CONTRACT NO.: 04-4a0901

DISREGARD PRINTS BEARING EARLIER REVISION DATES

REVISION DATES: 10-26-13 12-19-13 12-30-13

SHEET 13 OF 17

FILE => 21e0017-i-bikerail.dgn

USERNAME => s128630 DATE PLOTTED => 09-JUL-2014 TIME PLOTTED => 10:52

DIST	COUNTY	ROUTE	POST MILES TOTAL PROJECT	SHEET No	TOTAL SHEETS
04	Nap	29	47.0/47.2	143	146

REGISTERED CIVIL ENGINEER 04-08-13

June 23, 2014
PLANS APPROVAL DATE

REGISTERED PROFESSIONAL ENGINEER
Samuel Awad
No. 64589
Exp. 6-30-15
CIVIL
STATE OF CALIFORNIA

The State of California or its officers or agents shall not be responsible for the accuracy or completeness of electronic copies of this plan sheet.

This LOTB sheet was prepared in accordance with the Caltrans Soil & Rock Logging, Classification, & Presentation Manual (2010 Edition).

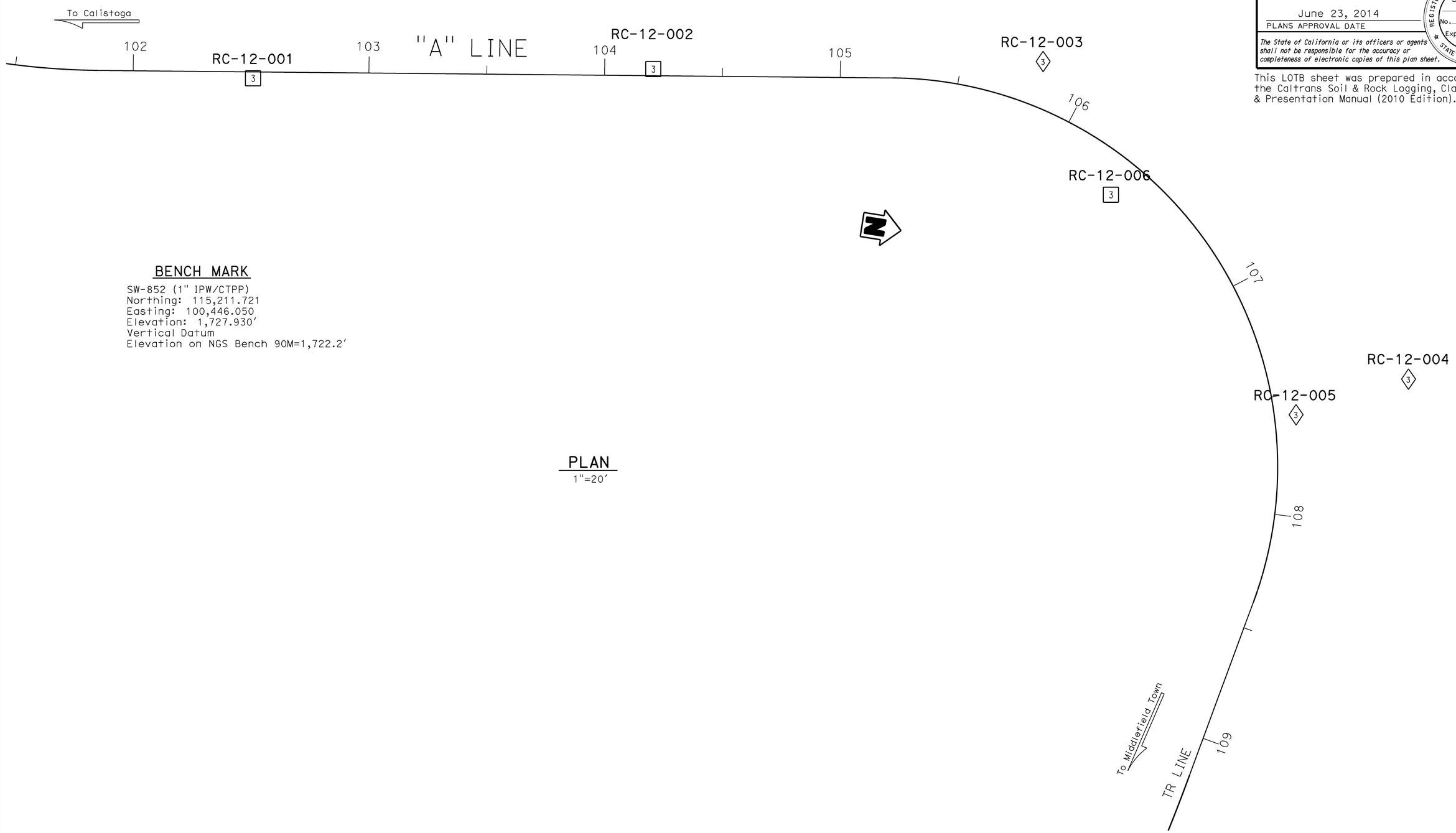

BENCH MARK

SW-852 (1" IPW/CTPP)
Northing: 115,211.721
Easting: 100,446.050
Elevation: 1,727.930'
Vertical Datum
Elevation on NGS Bench 90M=1,722.2'

PLAN

1"=20'

ENGINEERING SERVICES		GEOTECHNICAL SERVICES	STATE OF CALIFORNIA DEPARTMENT OF TRANSPORTATION	DIVISION OF ENGINEERING SERVICES OFFICE OF GEOTECHNICAL DESIGN BRANCH	BRIDGE NO. 21E0017	TROUTDALE CREEK BRIDGE
FUNCTIONAL SUPERVISOR	DRAWN BY: M. Reynolds 03/13	FIELD INVESTIGATION BY: V. Khotan & S. Awad			POST MILES 47.04	LOG OF TEST BORINGS 1 OF 4
NAME:	CHECKED BY: M. Gaffney					

ORIGINAL SCALE IN INCHES FOR REDUCED PLANS 0 1 2 3

UNIT: 3660
PROJECT NUMBER & PHASE: 0400001104, 1 CONTRACT NO.: 04-4A0901

DISREGARD PRINTS BEARING EARLIER REVISION DATES → 01-15-14

REVISION DATES				SHEET	OF
01-15-14				14	17

FILE => 21e0017-k-lotb01.dgn

USERNAME => s128530 DATE PLOTTED => 09-JUL-2014 TIME PLOTTED => 11:03

DIST	COUNTY	ROUTE	POST MILES TOTAL PROJECT	SHEET No	TOTAL SHEETS
04	Nap	29	47.0/47.2	144	146

REGISTERED CIVIL ENGINEER 04-08-13

June 23, 2014
PLANS APPROVAL DATE

REGISTERED PROFESSIONAL ENGINEER Samuel Awad No. 64589 Exp. 6-30-15 CIVIL STATE OF CALIFORNIA

The State of California or its officers or agents shall not be responsible for the accuracy or completeness of electronic copies of this plan sheet.

This LOTB sheet was prepared in accordance with the Caltrans Soil & Rock Logging, Classification, & Presentation Manual (2010 Edition).

NOTE: Groundwater not encountered at RC-12-002, RC-12-003 during drilling operation.

(For Boring Location See Plan, LOTB Sheet 1 of 4)

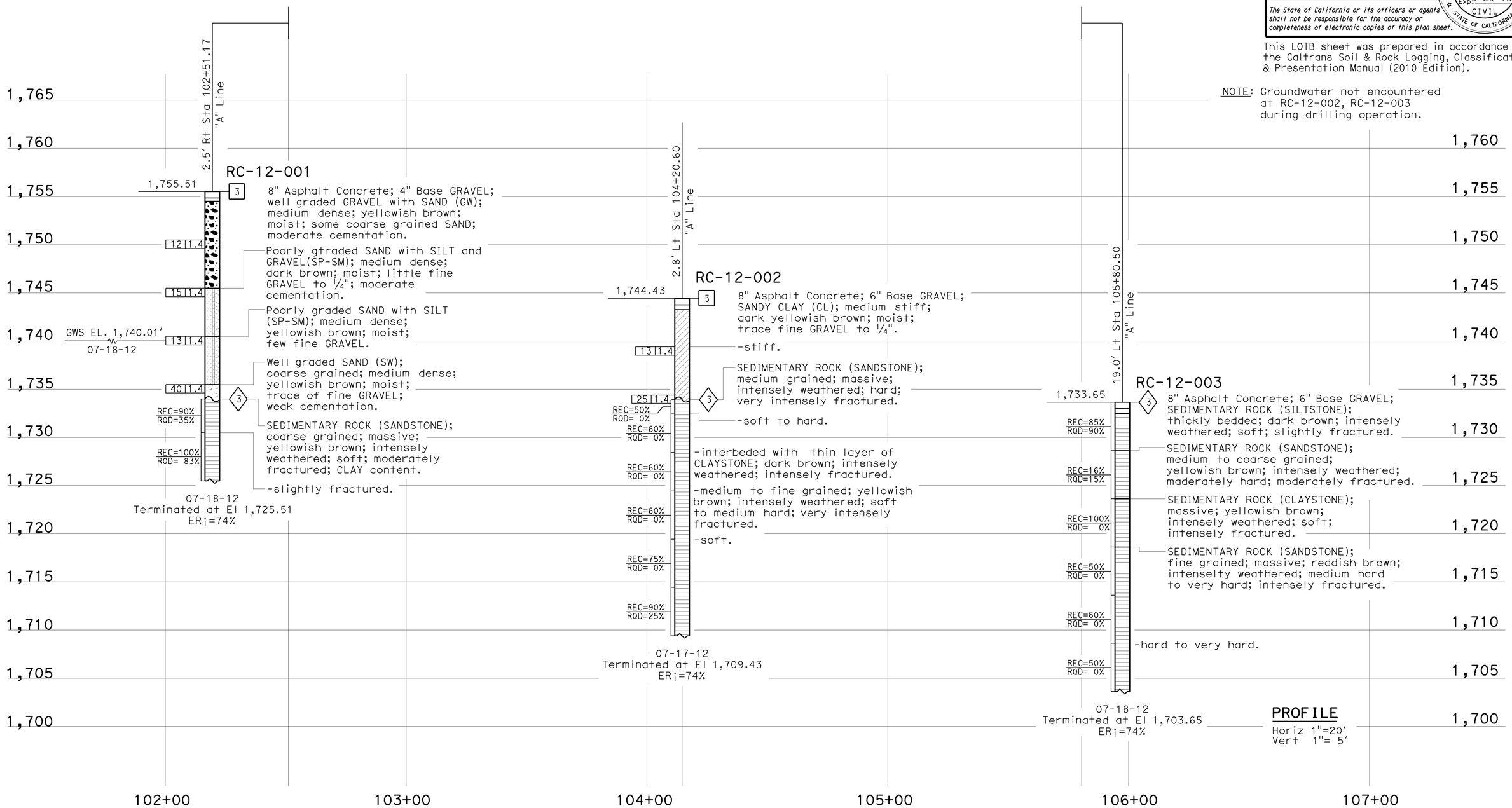

ENGINEERING SERVICES		GEOTECHNICAL SERVICES	STATE OF CALIFORNIA DEPARTMENT OF TRANSPORTATION	DIVISION OF ENGINEERING SERVICES OFFICE OF GEOTECHNICAL DESIGN BRANCH	BRIDGE NO. 21E0017 POST MILES 47.04	TROUTDALE CREEK BRIDGE
FUNCTIONAL SUPERVISOR	DRAWN BY: M. Reynolds 03/13	FIELD INVESTIGATION BY: V. Khotan & S. Awad				LOG OF TEST BORINGS 2 OF 4
NAME:	CHECKED BY: M. Gaffney					

ORIGINAL SCALE IN INCHES FOR REDUCED PLANS 0 1 2 3

UNIT: 3660
PROJECT NUMBER & PHASE: 0400001104, 1 CONTRACT NO.: 04-4A0901

DISREGARD PRINTS BEARING EARLIER REVISION DATES → 01-15-14

REVISION DATES | SHEET 15 | OF 17

FILE => 21e0017-k-lotb02.dgn

USERNAME => s128530 DATE PLOTTED => 09-JUL-2014 TIME PLOTTED => 10:56

DIST	COUNTY	ROUTE	POST MILES TOTAL PROJECT	SHEET No	TOTAL SHEETS
04	Nap	29	47.0/47.2	145	146

REGISTERED CIVIL ENGINEER 04-08-13

June 23, 2014
PLANS APPROVAL DATE

REGISTERED PROFESSIONAL ENGINEER Samuel Awad No. 64589 Exp. 6-30-15 CIVIL STATE OF CALIFORNIA

The State of California or its officers or agents shall not be responsible for the accuracy or completeness of electronic copies of this plan sheet.

This LOTB sheet was prepared in accordance with the Caltrans Soil & Rock Logging, Classification, & Presentation Manual (2010 Edition).

NOTE: Groundwater not encountered at RC-12-004, RC-12-006 during drilling operation.

(For Boring Location See Plan, LOTB Sheet 1 of 4)

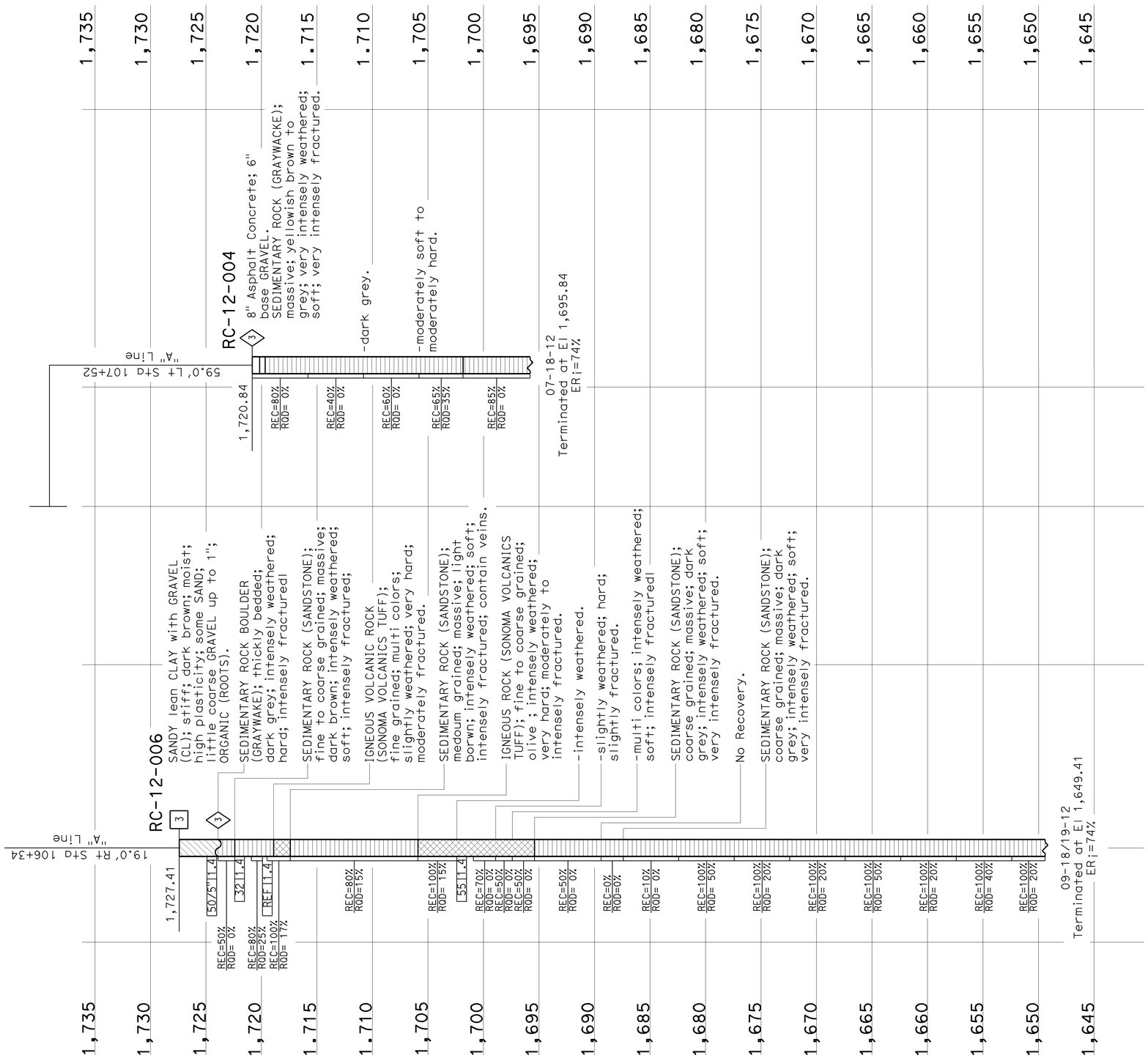

PROFILE
Horiz 1"=20'
Vert 1"= 5'

ENGINEERING SERVICES	GEOTECHNICAL SERVICES	STATE OF CALIFORNIA DEPARTMENT OF TRANSPORTATION	DIVISION OF ENGINEERING SERVICES OFFICE OF GEOTECHNICAL DESIGN BRANCH	BRIDGE NO. 21E0017 / POST MILES 47.04	TROUTDALE CREEK BRIDGE
FUNCTIONAL SUPERVISOR	DRAWN BY: M. Reynolds 03/13	FIELD INVESTIGATION BY: V. Khotan & S. Awad			LOG OF TEST BORINGS 3 OF 4
NAME:	CHECKED BY: M. Gaffney				

ORIGINAL SCALE IN INCHES FOR REDUCED PLANS 0 1 2 3

UNIT: 3660
PROJECT NUMBER & PHASE: 0400001104, 1 CONTRACT NO.: 04-4A0901

DISREGARD PRINTS BEARING EARLIER REVISION DATES

REVISION DATES 06-04-13 01-15-14

SHEET 16 OF 17

FILE => 21e0017-k-lotb03.dgn

USERNAME => s128530 DATE PLOTTED => 09-JUL-2014 TIME PLOTTED => 10:59

DIST	COUNTY	ROUTE	POST MILES TOTAL PROJECT	SHEET No	TOTAL SHEETS
04	Nap	29	47.0/47.2	146	146

REGISTERED CIVIL ENGINEER 04-08-13

June 23, 2014
PLANS APPROVAL DATE

REGISTERED PROFESSIONAL ENGINEER
Samuel Awad
No. 64589
Exp. 6-30-15
CIVIL
STATE OF CALIFORNIA

The State of California or its officers or agents shall not be responsible for the accuracy or completeness of electronic copies of this plan sheet.

This LOTB sheet was prepared in accordance with the Caltrans Soil & Rock Logging, Classification, & Presentation Manual (2010 Edition).

NOTE: Groundwater not encountered at RC-12-005 during drilling operation.

(For Boring Location See Plan, LOTB Sheet 1 of 4)

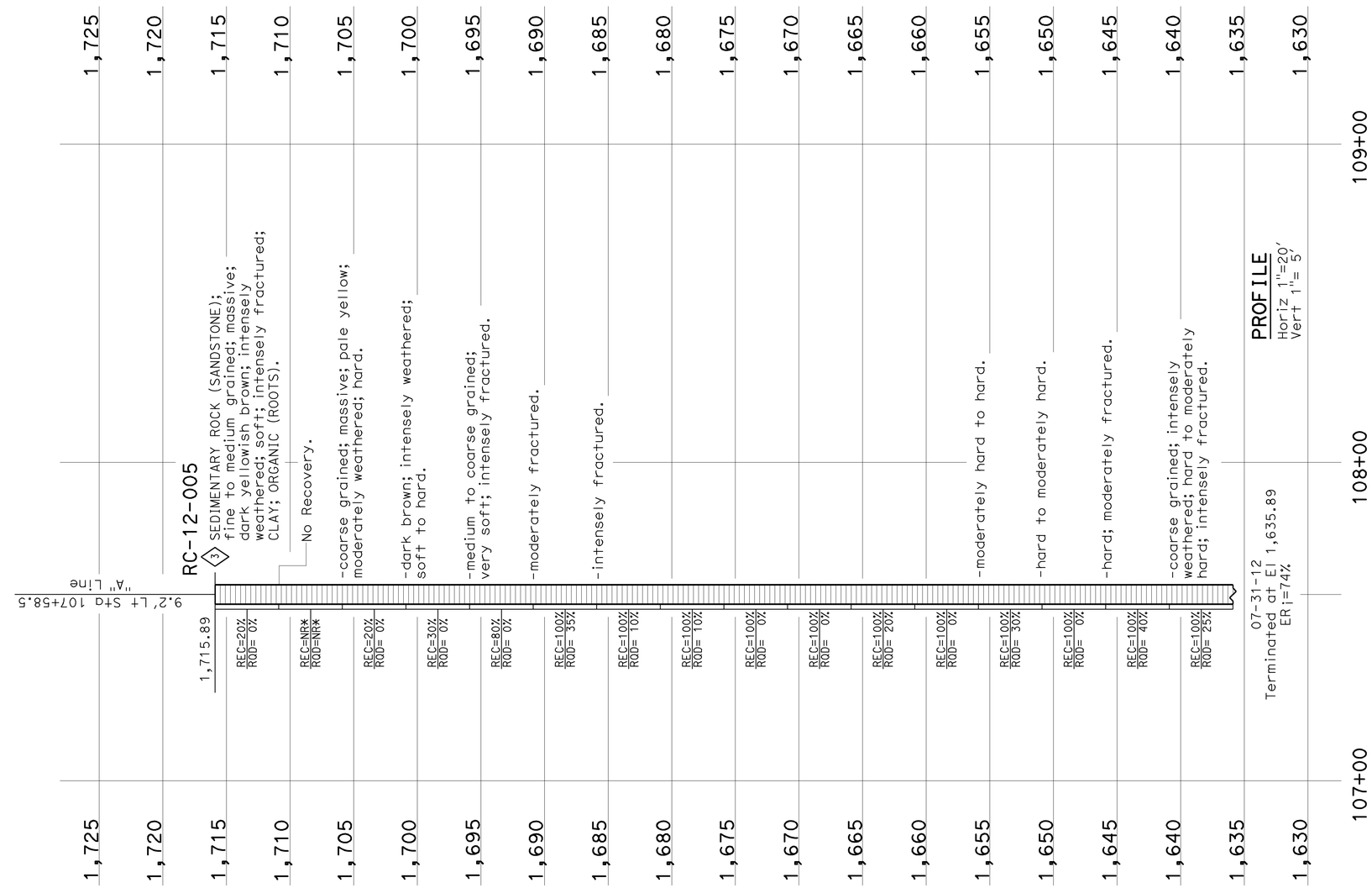

ENGINEERING SERVICES		GEOTECHNICAL SERVICES	STATE OF CALIFORNIA DEPARTMENT OF TRANSPORTATION	DIVISION OF ENGINEERING SERVICES OFFICE OF GEOTECHNICAL DESIGN BRANCH	BRIDGE NO. 21E0017 POST MILES 47.04	TROUTDALE CREEK BRIDGE
FUNCTIONAL SUPERVISOR	DRAWN BY: M. Reynolds 03/13	FIELD INVESTIGATION BY: V. Khotan & S. Awad				LOG OF TEST BORINGS 4 OF 4
NAME:	CHECKED BY: M. Gaffney					

ORIGINAL SCALE IN INCHES FOR REDUCED PLANS 0 1 2 3

UNIT: 3660
PROJECT NUMBER & PHASE: 0400001104, 1 CONTRACT NO.: 04-4A0901

DISREGARD PRINTS BEARING EARLIER REVISION DATES → 01-15-14

REVISION DATES				SHEET	OF
				17	17

FILE => 21e0017-k-lotb04.dgn

USERNAME => s128530 DATE PLOTTED => 09-JUL-2014 TIME PLOTTED => 11:00