Dist	COUNTY	ROUTE	POST MILES TOTAL PROJECT	SHEET No.	TOTAL SHEETS
04	Nap	29	47.0/47.2	1	146

STATE OF CALIFORNIA

DEPARTMENT OF TRANSPORTATION

ACSTP-P029(117)E

PROJECT PLANS FOR CONSTRUCTION ON

STATE HIGHWAY

IN NAPA COUNTY
ABOUT 6.0 MILES NORTH OF CALISTOGA
AT TROUTDALE CREEK BRIDGE

TO BE SUPPLEMENTED BY STANDARD PLANS DATED 2010

INDEX OF PLANS

SHEET No.	DESCRIPTION
1	TITLE SHEET AND LOCATION MAP
2 - 3	TYPICAL CROSS SECTIONS
4	LAYOUT
5	PROFILE AND SUPERELEVATION DIAGRAM
6 - 10	CONSTRUCTION DETAILS
11 - 12	TEMPORARY WATER POLLUTION CONTROL DETAILS AND QUANTITIES
13 - 16	CONTOUR GRADING
17 - 31	DRAINAGE PLAN, PROFILES, DETAILS AND QUANTITIES
32	CONSTRUCTION AREA SIGNS
33 - 36	STAGE CONSTRUCTION
37 - 41	TRAFFIC HANDLING PLAN AND QUANTITIES
42 - 43	PAVEMENT DELINEATION PLAN AND QUANTITIES
44 - 46	SIGN PLAN, DETAILS AND QUANTITIES
47	SUMMARY OF QUANTITIES
48 - 51	IRRIGATION SPRINKLER SCHEDULE, PLANS AND QUANTITIES
52 - 53	PLANT LIST AND PLAN
54 - 55	LANDSCAPE DETAILS AND QUANTITIES
56 - 59	EROSION CONTROL LEGEND, PLAN, DETAILS AND QUANTITIES
60 - 64	ELECTRICAL PLAN, DETAILS AND QUANTITIES
65 - 94	REVISED STANDARD PLANS
95 - 146	STRUCTURAL PLANS

THE STANDARD PLANS LIST APPLICABLE TO THIS CONTRACT IS INCLUDED IN THE NOTICE TO BIDDERS AND SPECIAL PROVISIONS BOOK.

LOCATION MAP

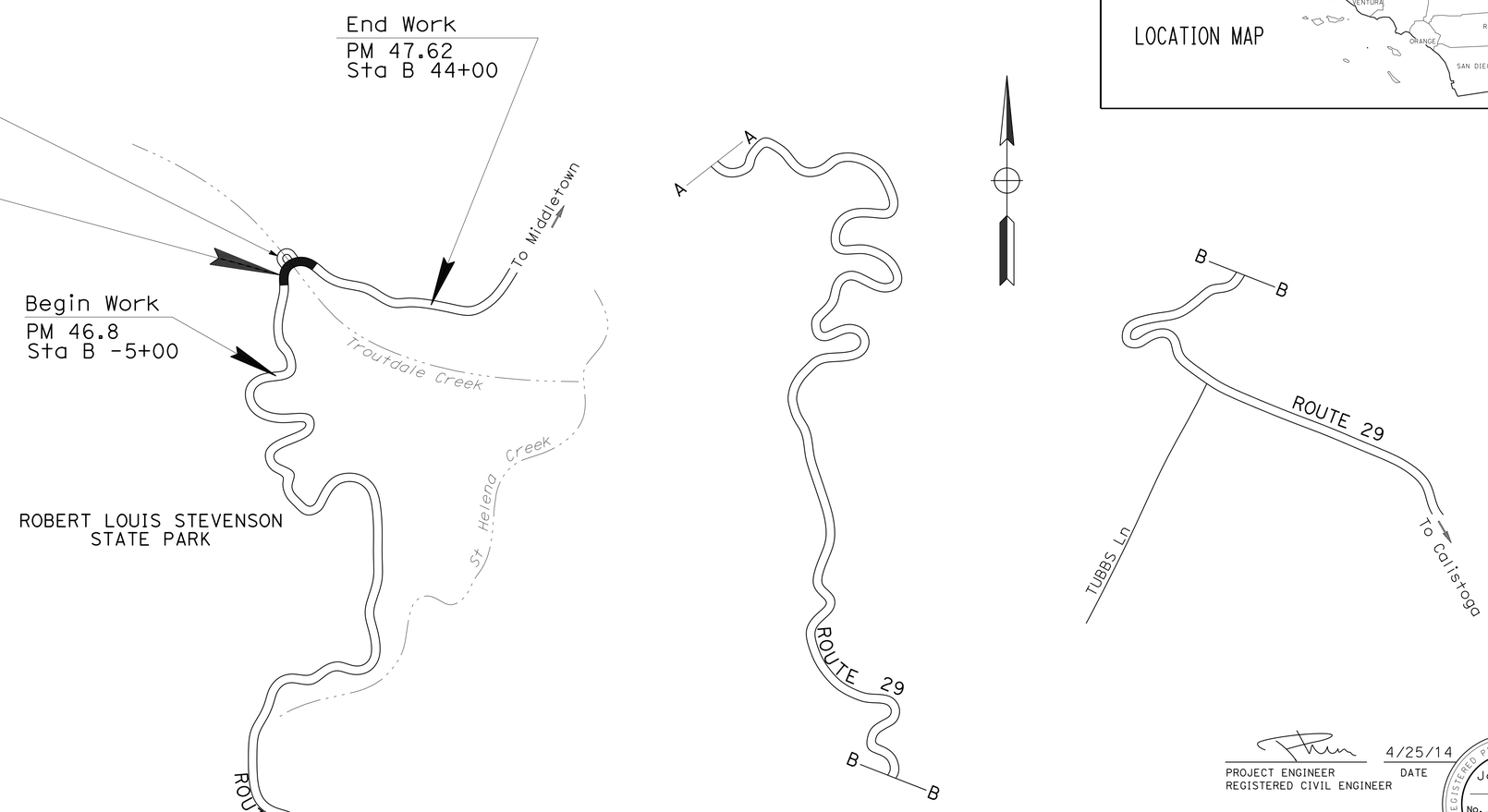

NO SCALE

CALISTOGA

THE CONTRACTOR SHALL POSSESS THE CLASS (OR CLASSES) OF LICENSE AS SPECIFIED IN THE "NOTICE TO BIDDERS."

PROJECT ENGINEER REGISTERED CIVIL ENGINEER — DATE 4/25/14

June 23, 2014
PLANS APPROVAL DATE

REGISTERED PROFESSIONAL ENGINEER — Jason R. Phoen — No. 57553 — Exp. 12-31-15 — CIVIL — STATE OF CALIFORNIA

THE STATE OF CALIFORNIA OR ITS OFFICERS OR AGENTS SHALL NOT BE RESPONSIBLE FOR THE ACCURACY OR COMPLETENESS OF SCANNED COPIES OF THIS PLAN SHEET.

PROJECT MANAGER: KELLY HIRSCHBERG
DESIGN MANAGER: STEWART LEE

CONTRACT No.	04-4A0904
PROJECT ID	0400001104

LAST REVISION 03-05-14 — DATE PLOTTED => 08-SEP-2014 — TIME PLOTTED => 11:01

Dist	COUNTY	ROUTE	POST MILES TOTAL PROJECT	SHEET No.	TOTAL SHEETS
04	Nap	29	47.0/47.2	2	146

REGISTERED CIVIL ENGINEER DATE 4/24/14

PLANS APPROVAL DATE 6-23-14

REGISTERED PROFESSIONAL ENGINEER Jason R. Phoen No. 57553 Exp. 12-31-15 CIVIL STATE OF CALIFORNIA

THE STATE OF CALIFORNIA OR ITS OFFICERS OR AGENTS SHALL NOT BE RESPONSIBLE FOR THE ACCURACY OR COMPLETENESS OF SCANNED COPIES OF THIS PLAN SHEET.

NOTES:

1. DIMENSIONS OF THE PAVEMENT STRUCTURES (STRUCTURAL SECTIONS) ARE SUBJECT TO TOLERANCES SPECIFIED IN THE STANDARD SPECIFICATIONS.
2. SUPERELEVATIONS ARE SHOWN ON THE SUPERELEVATION DIAGRAMS.
3. EXACT LOCATIONS AND TYPES OF HMA DIKE ARE SHOWN ON THE LAYOUTS AND SUMMARY OF QUANTITIES SHEETS.
4. FOR A 106+90 TO 107+50 SECTIONS, SEE STRUCTURE PLANS.
5. FOR A 105+20 TO 106+50 SECTION, SEE SHEET C-3.

ABBREVIATION:

MGS MIDWEST GUARDRAIL SYSTEM

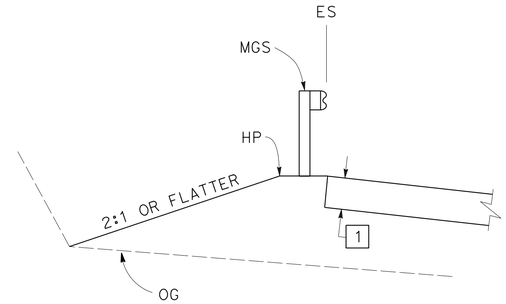

A 107+81 TO 108+50

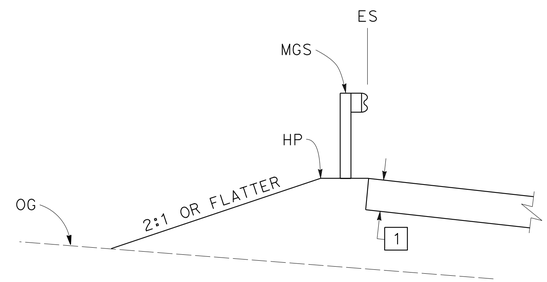

A 106+60 TO 106+80

TYPICAL PAVEMENT STRUCTURE SECTIONS

1 1.05' HMA (TYPE A)

2 CONCRETE SLAB (SEE STRUCTURE PLAN)

ROUTE 29 DESIGN DESIGNATION

2010 ADT = 4600	D = 57.62%
2036 ADT = 4600	T = 6.65%
2036 DHV = 500	V = 25 MPH
ESAL 2034 = 555,000	TI20 = 8.5

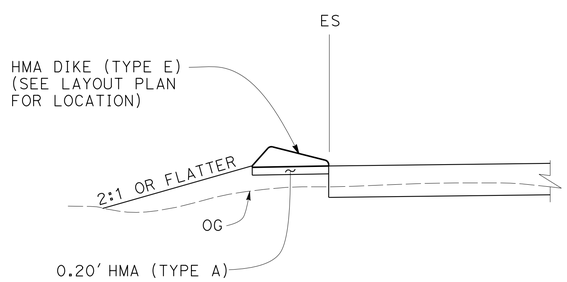

SOUTHBOUND
A 101+85 TO 103+45

DETAIL A

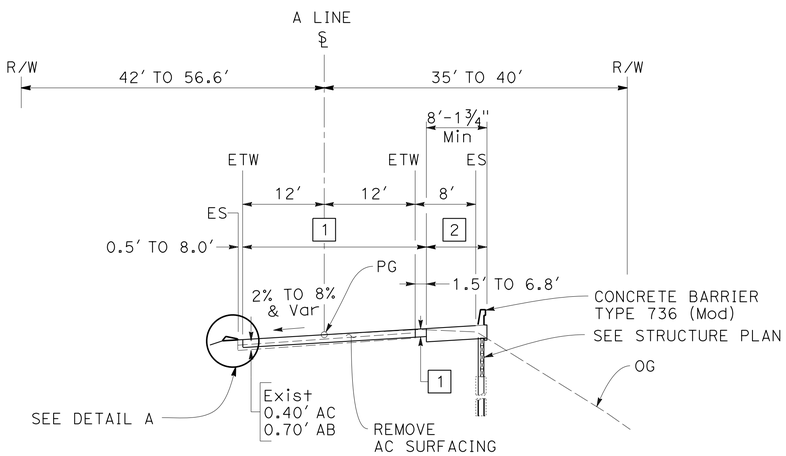

A 101+84.9 TO 105+19.12

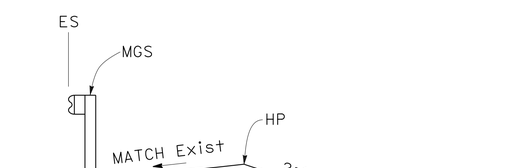

A 100+84 TO 101+83.90

TYPICAL CROSS SECTIONS

NO SCALE

X-1

STATE OF CALIFORNIA - DEPARTMENT OF TRANSPORTATION

Caltrans® DESIGN

FUNCTIONAL SUPERVISOR STEWART LEE

CALCULATED-DESIGNED BY JASON B PHOEN

CHECKED BY STEWART LEE

REVISED BY JRP

DATE REVISED 4/24/14

LAST REVISION 04-15-14

DATE PLOTTED => 08-SEP-2014

TIME PLOTTED => 11:01

Dist	COUNTY	ROUTE	POST MILES TOTAL PROJECT	SHEET No.	TOTAL SHEETS
04	Nap	29	47.0/47.2	3	146

REGISTERED CIVIL ENGINEER 4/24/14 DATE

6-23-14
PLANS APPROVAL DATE

REGISTERED PROFESSIONAL ENGINEER Jason R. Phoen No. 57553 Exp. 12-31-15 CIVIL STATE OF CALIFORNIA

THE STATE OF CALIFORNIA OR ITS OFFICERS OR AGENTS SHALL NOT BE RESPONSIBLE FOR THE ACCURACY OR COMPLETENESS OF SCANNED COPIES OF THIS PLAN SHEET.

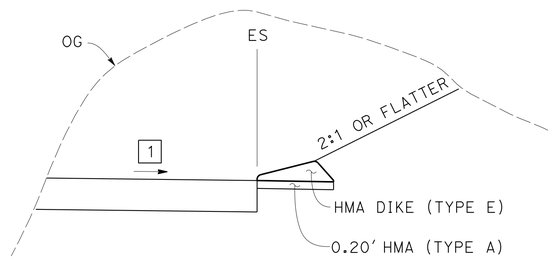

NORTHBOUND
A 108+15 TO 109+75

DETAIL B

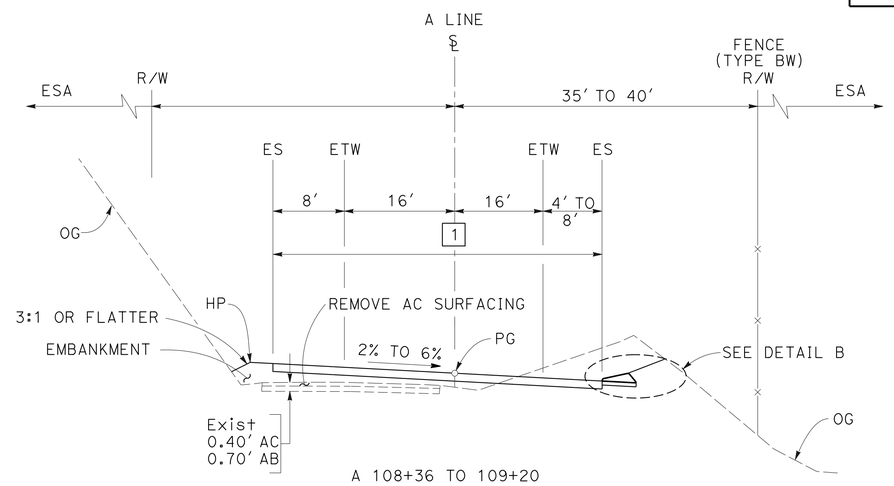

A 108+36 TO 109+20

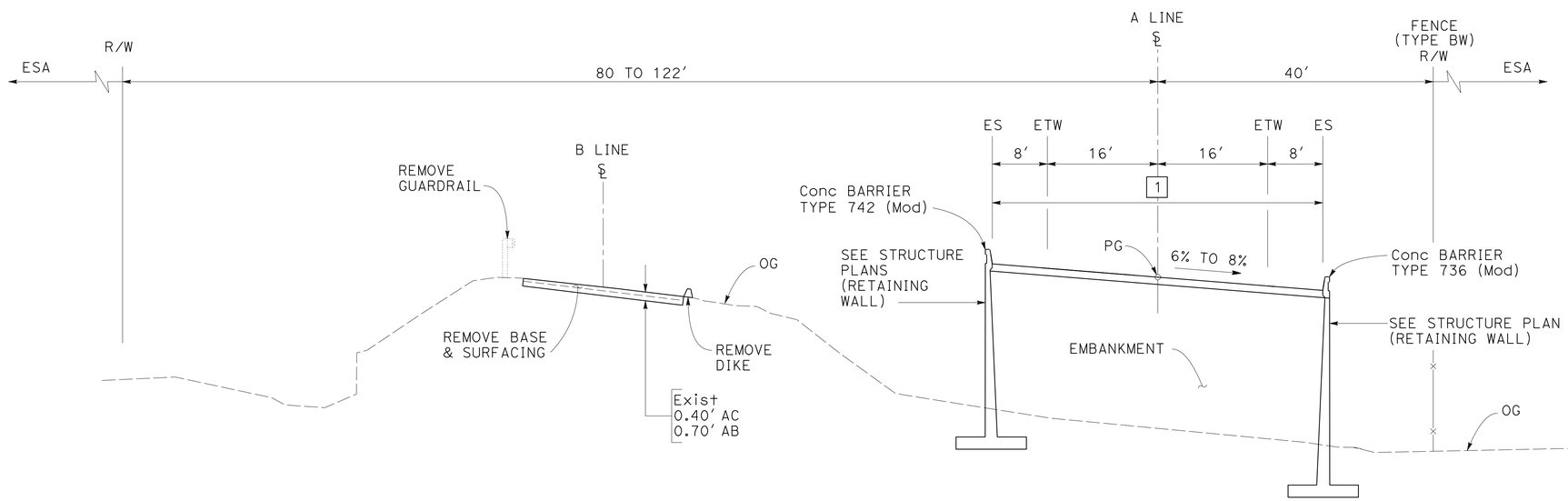

B 106+50 TO 108+40

A 106+50 TO 106+90
A 107+50 TO 108+36

TYPICAL CROSS SECTIONS

NO SCALE

FOR NOTES, ABBREVIATIONS AND LEGEND, SEE SHEET X-1

X-2

REVISED BY	DATE REVISED
JRP	4/24/14

CALCULATED-DESIGNED BY: JASON R PHOEN
CHECKED BY: STEWART LEE
FUNCTIONAL SUPERVISOR: STEWART LEE

STATE OF CALIFORNIA - DEPARTMENT OF TRANSPORTATION
Caltrans®
DESIGN

LAST REVISION 03-10-14
DATE PLOTTED => 08-SEP-2014
TIME PLOTTED => 11:01

Dist	COUNTY	ROUTE	POST MILES TOTAL PROJECT	SHEET No.	TOTAL SHEETS
04	Nap	29	47.0/47.2	4	146

REGISTERED CIVIL ENGINEER 4/24/14 DATE

6-23-14
PLANS APPROVAL DATE

REGISTERED PROFESSIONAL ENGINEER Jason R. Phoen No. 57553 Exp. 12-31-15 CIVIL STATE OF CALIFORNIA

THE STATE OF CALIFORNIA OR ITS OFFICERS OR AGENTS SHALL NOT BE RESPONSIBLE FOR THE ACCURACY OR COMPLETENESS OF SCANNED COPIES OF THIS PLAN SHEET.

NOTE:

FOR ACCURATE RIGHT OF WAY DATA, CONTACT RIGHT OF WAY ENGINEERING AT THE DISTRICT OFFICE.

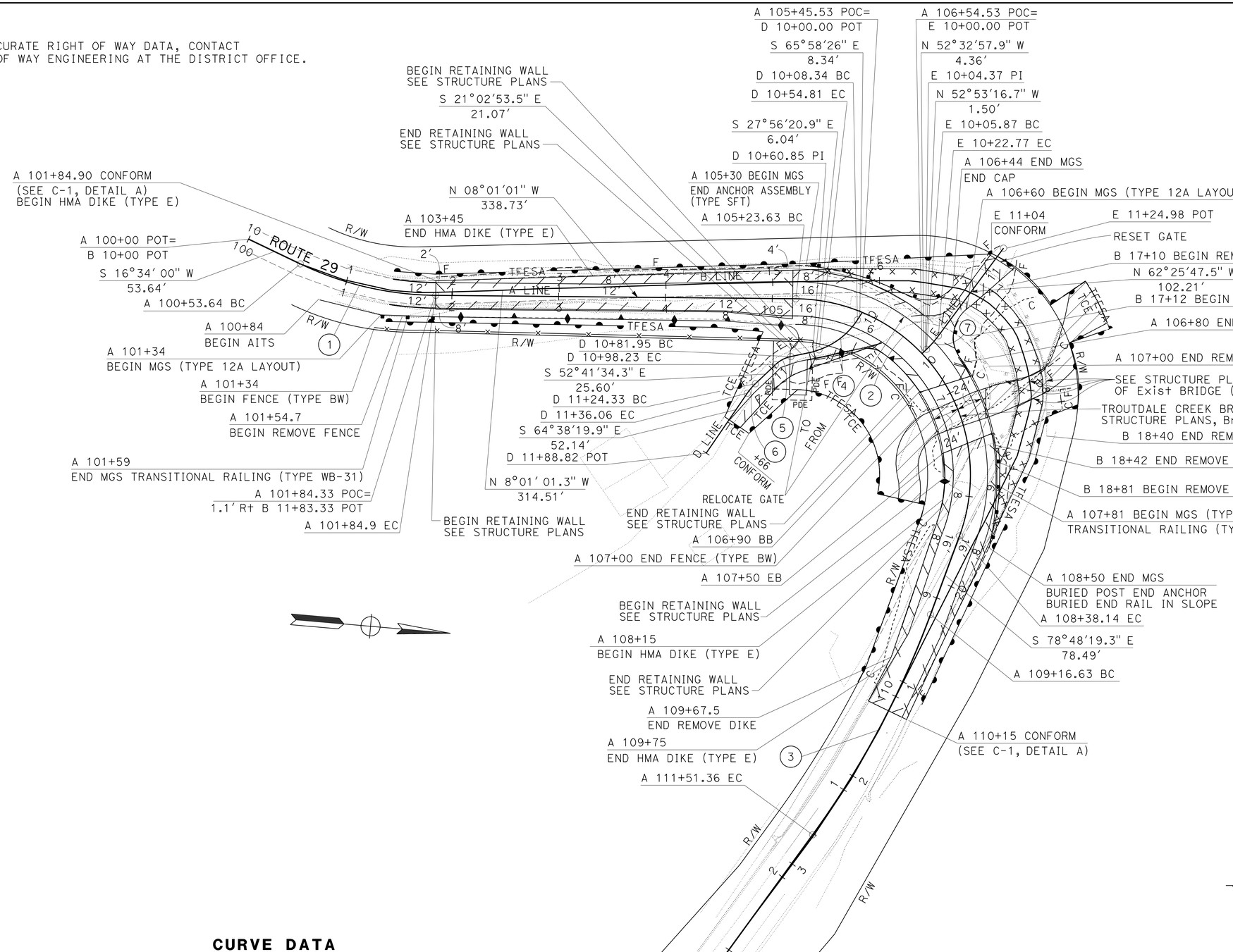

NOTES:

1. THE ENTIRE PROJECT LIMITS ARE WITHIN AN ENVIROMENTAL SENSITIVE AREA (ESA)
2. ALL WORK WITHIN BED AND BANK OF TROUTDALE CREEK RESTRICTED AS SPECIFIED.

LEGEND:

- REMOVE BASE AND SURFACING
- 1.05' HMA (TYPE A)
- CREEK AREA (SEE NOTE 2)
- ----- TEMPORARY CONSTRUCTION EASEMENT (TCE)
- TFESA TEMPORARY WILDLIFE EXCLUSION FENCE (WEF)

ABBREVIATIONS:

PDE	PERMANENT DRAINAGE EASEMENT
AITS	ALTERNATE IN-LINE TERMINAL SYSTEM

CURVE DATA

No. Ⓡ	R	Δ	T	L	N-COORDINATE	E-COORDINATE
1	300'	25°04'06"	66.70'	131.26'	114638.22	100244.33
2	165'	109°41'47"	234.32'	315.90'	115040.48	100654.37
3	850'	15°49'19"	118.11'	234.72'	114353.26	100598.46
4	70'	38°02'05"	24.12'	46.46'	115012.16	100473.16
5	29'	32°09'03"	8.35'	16.27'	115030.10	100572.57
6	55'	12°13'13"	5.88'	11.73'	115034.72	100609.33
7	100'	09°40'54"	8.46'	16.89'	115064.63	100598.46

LAYOUT

SCALE: 1" = 50'

L-1

JRP	4/24/14	JASON R PHOEN	STEWART LEE
REVISED BY	DATE REVISED	CALCULATED-DESIGNED BY	CHECKED BY

FUNCTIONAL SUPERVISOR: STEWART LEE

STATE OF CALIFORNIA - DEPARTMENT OF TRANSPORTATION

Caltrans DESIGN

LAST REVISION 06-24-14 | DATE PLOTTED => 08-SEP-2014 | TIME PLOTTED => 11:01

Dist	COUNTY	ROUTE	POST MILES TOTAL PROJECT	SHEET No.	TOTAL SHEETS
04	Nap	29	47.0/47.2	5	146

REGISTERED CIVIL ENGINEER DATE 4/24/14

6-23-14
PLANS APPROVAL DATE

REGISTERED PROFESSIONAL ENGINEER Jason R. Phoen No. 57553 Exp. 12-31-15 CIVIL STATE OF CALIFORNIA

THE STATE OF CALIFORNIA OR ITS OFFICERS OR AGENTS SHALL NOT BE RESPONSIBLE FOR THE ACCURACY OR COMPLETENESS OF SCANNED COPIES OF THIS PLAN SHEET.

NOTE:

FOR EXCAVATION AND EMBANKMENT QUANTITIES,
D LINE ARE INCLUDED IN A 105+00 TO 106+00;
E LINE ARE INCLUDED IN A 106+00 TO 107+00;
AND CONTOUR GRADING AT CREEK
ARE INCLUDED IN A 107+00 TO 108+00.

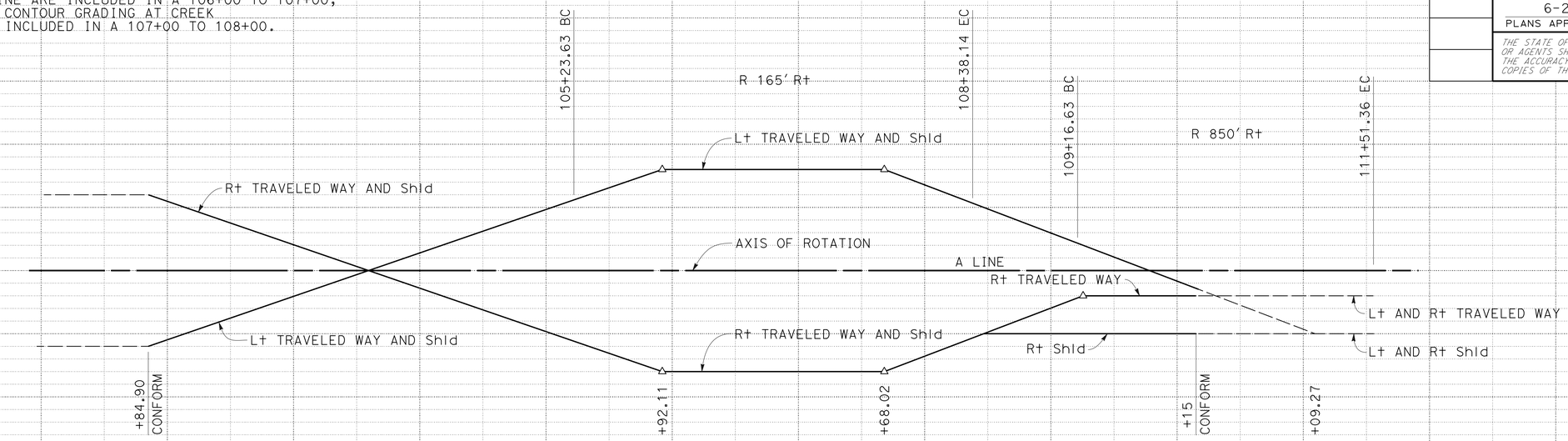

SUPERELEVATION

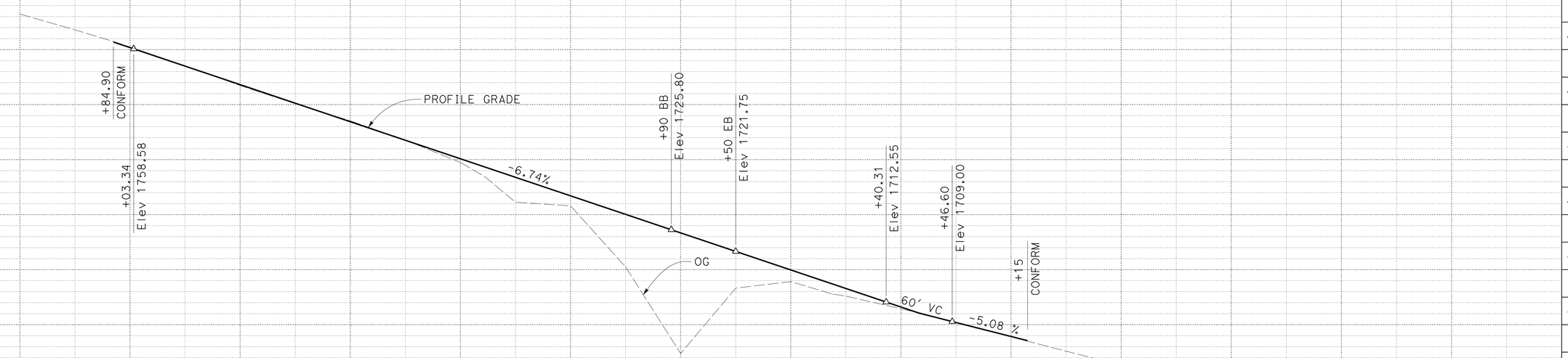

PROFILE
A LINE

PROFILE AND SUPERELEVATION DIAGRAM

SCALE: HORIZ 1" = 50'
VERT 1" = 10'

PS-1

STATION	1	2	3	4	105	6	7	8	9	110	1	2	3	4	TOTAL
CY Exc	24	101	108	120	42	4	2382	317	237						3335
CY Emb	2	92	124	132	1051	1842	546	119	4						3912

STATE OF CALIFORNIA - DEPARTMENT OF TRANSPORTATION
Caltrans DESIGN

FUNCTIONAL SUPERVISOR: STEWART LEE
CALCULATED-DESIGNED BY: JASON R PHOEN
CHECKED BY: STEWART LEE
REVISED BY: JRP
DATE REVISED: 4/42/14

LAST REVISION 03-19-14
DATE PLOTTED => 08-SEP-2014
TIME PLOTTED => 11:01

Dist	COUNTY	ROUTE	POST MILES TOTAL PROJECT	SHEET No.	TOTAL SHEETS
04	Nap	29	47.0/47.2	6	146

REGISTERED CIVIL ENGINEER DATE 4/24/14

6-23-14
PLANS APPROVAL DATE

REGISTERED PROFESSIONAL ENGINEER Jason R. Phoen No. 57553 Exp. 12-31-15 CIVIL STATE OF CALIFORNIA

THE STATE OF CALIFORNIA OR ITS OFFICERS OR AGENTS SHALL NOT BE RESPONSIBLE FOR THE ACCURACY OR COMPLETENESS OF SCANNED COPIES OF THIS PLAN SHEET.

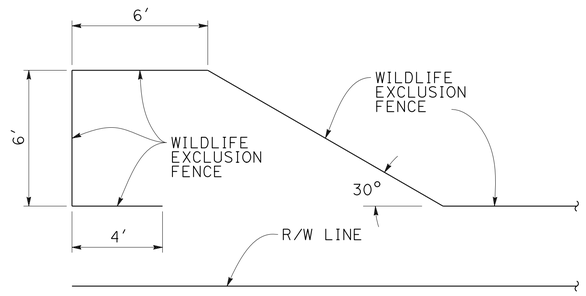

PLAN

WILDLIFE EXCLUSION FENCE AT BEGIN/END DETAIL

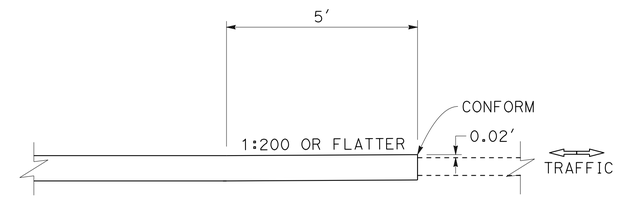

DETAIL A

MAINLINE PAVING CONFORM

A 101+84.90
A 110+15

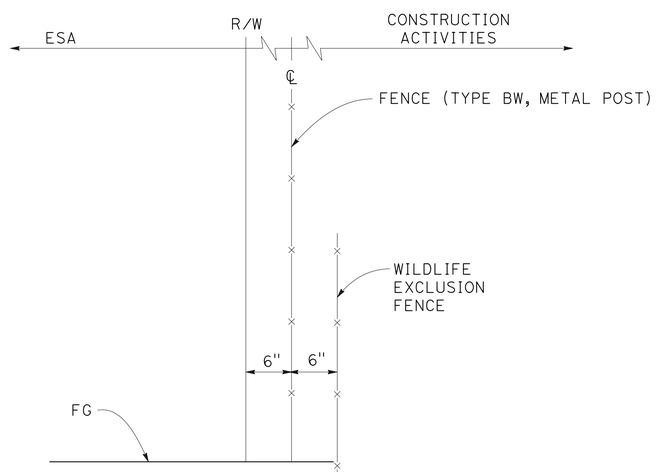

FENCE DETAIL

CONSTRUCTION DETAILS

NO SCALE

C-1

STATE OF CALIFORNIA - DEPARTMENT OF TRANSPORTATION
Caltrans® **DESIGN**

FUNCTIONAL SUPERVISOR: STEWART LEE
CALCULATED-DESIGNED BY: JASON R PHOEN
CHECKED BY: STEWART LEE
REVISED BY: JRP
DATE REVISED: 4/24/14

LAST REVISION 04-15-14 | DATE PLOTTED => 08-SEP-2014 | TIME PLOTTED => 11:01

Dist	COUNTY	ROUTE	POST MILES TOTAL PROJECT	SHEET No.	TOTAL SHEETS
04	Nap	29	47.0/47.2	7	146

REGISTERED CIVIL ENGINEER 4/24/14 DATE

6-23-14
PLANS APPROVAL DATE

REGISTERED PROFESSIONAL ENGINEER Jason R. Phoen No. 57553 Exp. 12-31-15 CIVIL STATE OF CALIFORNIA

THE STATE OF CALIFORNIA OR ITS OFFICERS OR AGENTS SHALL NOT BE RESPONSIBLE FOR THE ACCURACY OR COMPLETENESS OF SCANNED COPIES OF THIS PLAN SHEET.

NOTE:

FOR ACCURATE RIGHT OF WAY DATA, CONTACT
RIGHT OF WAY ENGINEERING AT THE DISTRICT OFFICE.

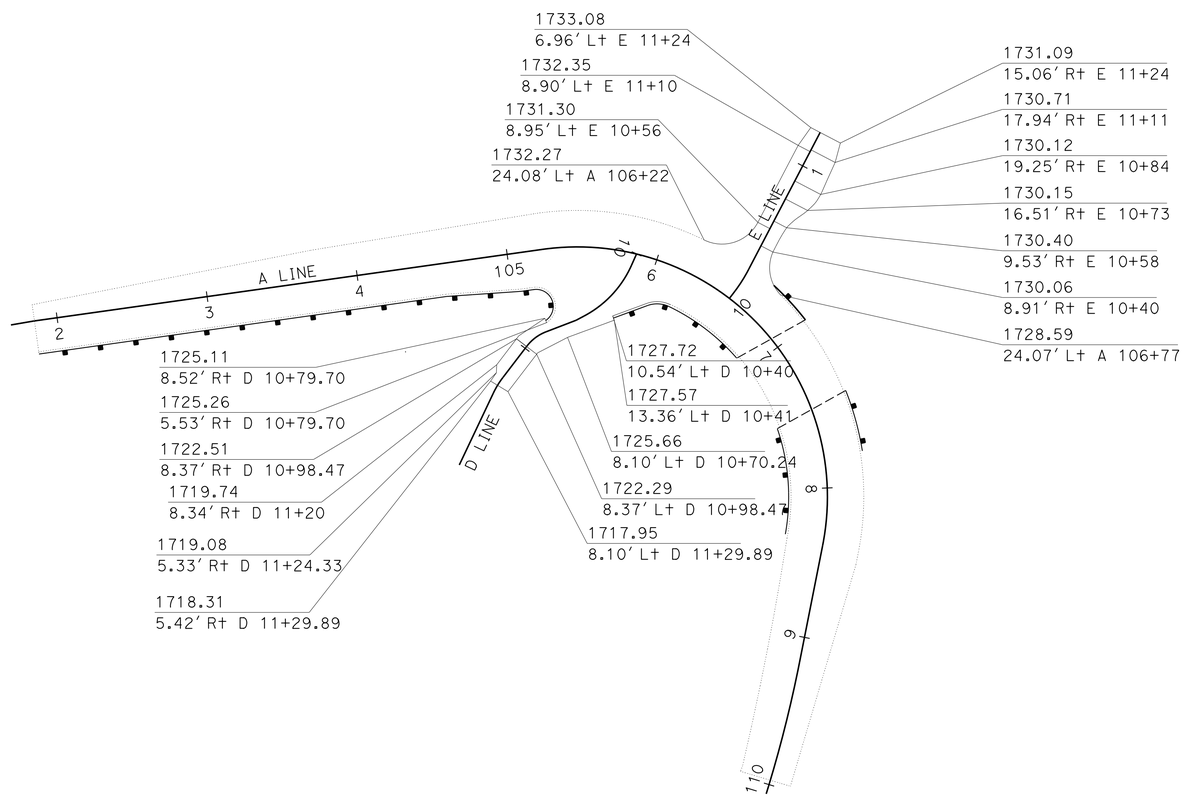

CONSTRUCTION DETAILS
PAVEMENT ELEVATION PLAN
SCALE: 1" = 50'

APPROVED FOR PAVEMENT ELEVATION WORK ONLY

C-2

STATE OF CALIFORNIA - DEPARTMENT OF TRANSPORTATION
Caltrans
DESIGN

FUNCTIONAL SUPERVISOR: STEWART LEE
CALCULATED-DESIGNED BY: JASON R PHOEN
CHECKED BY: STEWART LEE
REVISED BY: JRP
DATE REVISED: 4/24/14

LAST REVISION 04-10-14
DATE PLOTTED => 08-SEP-2014
TIME PLOTTED => 11:01

Dist	COUNTY	ROUTE	POST MILES TOTAL PROJECT	SHEET No.	TOTAL SHEETS
04	Nap	29	47.0/47.2	8	146

REGISTERED CIVIL ENGINEER 4/24/14 DATE

6-23-14
PLANS APPROVAL DATE

REGISTERED PROFESSIONAL ENGINEER Jason R. Phoen No. 57553 Exp. 12-31-15 CIVIL STATE OF CALIFORNIA

THE STATE OF CALIFORNIA OR ITS OFFICERS OR AGENTS SHALL NOT BE RESPONSIBLE FOR THE ACCURACY OR COMPLETENESS OF SCANNED COPIES OF THIS PLAN SHEET.

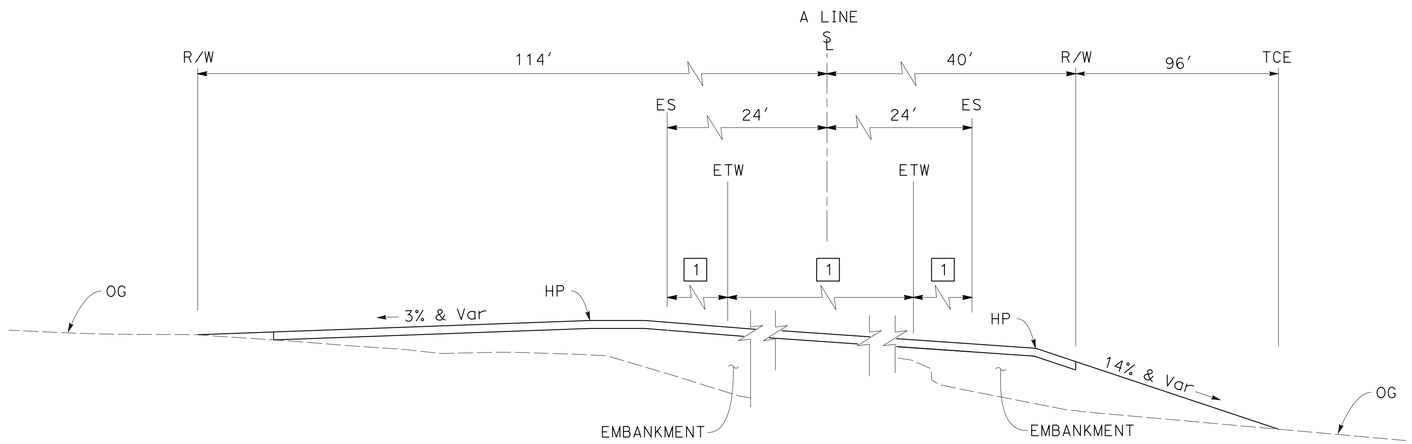

SOUTHBOUND
A 106+20 TO 106+50

NORTHBOUND
A 105+20 TO 106+20

LANE DRIVEWAY

CONSTRUCTION DETAILS
NO SCALE

C-3

STATE OF CALIFORNIA - DEPARTMENT OF TRANSPORTATION
Caltrans® DESIGN

FUNCTIONAL SUPERVISOR: STEWART LEE
CALCULATED-DESIGNED BY: JASON R PHOEN
CHECKED BY: STEWART LEE
REVISED BY
DATE REVISED

LAST REVISION 03-19-14
DATE PLOTTED => 08-SEP-2014
TIME PLOTTED => 11:01

Dist	COUNTY	ROUTE	POST MILES TOTAL PROJECT	SHEET No.	TOTAL SHEETS
04	NAP	29	47.0/47.2	9	146

LICENSED LANDSCAPE ARCHITECT

6-23-14
PLANS APPROVAL DATE

LICENSED LANDSCAPE ARCHITECT
MARTIN A. HOGAN No. 4864
Signature
3-31-15
Renewal Date
4-24-14
Date
STATE OF CALIFORNIA

THE STATE OF CALIFORNIA OR ITS OFFICERS OR AGENTS SHALL NOT BE RESPONSIBLE FOR THE ACCURACY OR COMPLETENESS OF SCANNED COPIES OF THIS PLAN SHEET.

NOTES:

1. See Sheet C-5 for ashlar stone texture detail.
2. See Structures Plans for bridge dimensions.

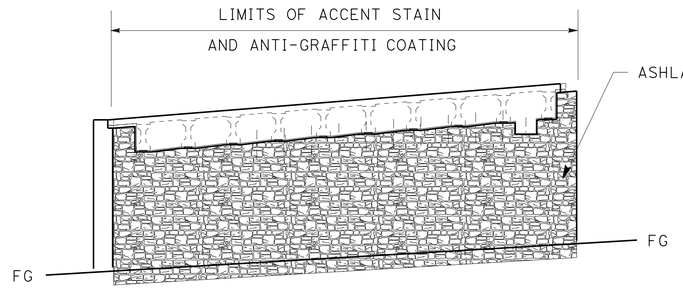

ABUT 1 ELEVATION

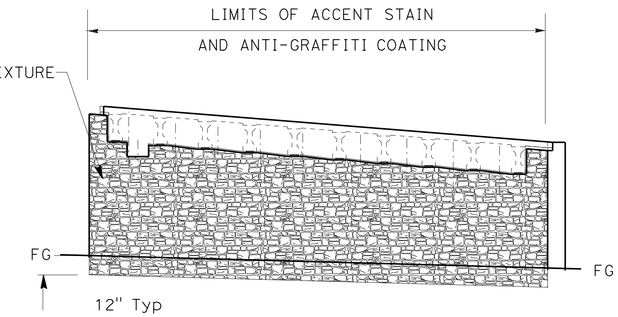

ABUT 2 ELEVATION

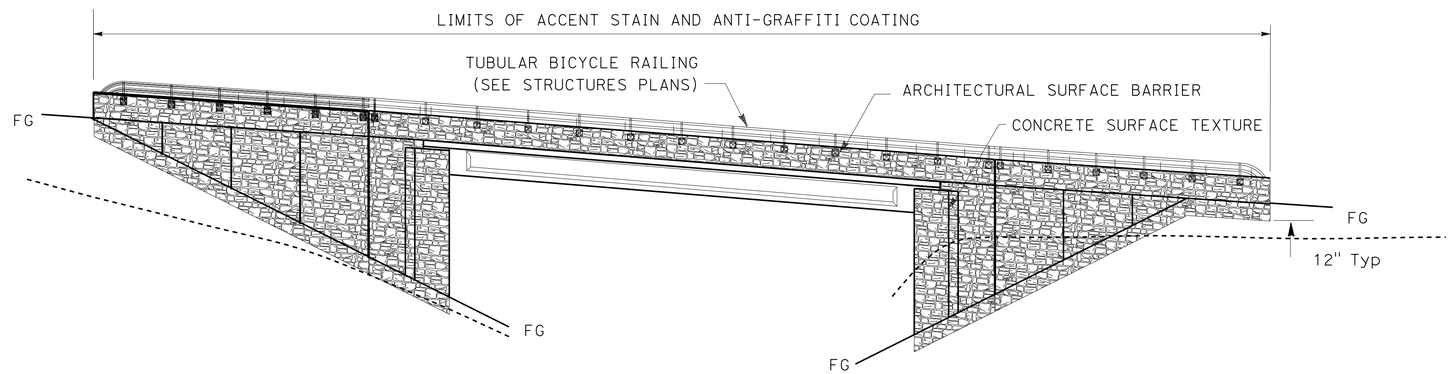

DEVELOPED MIRRORED ELEVATION

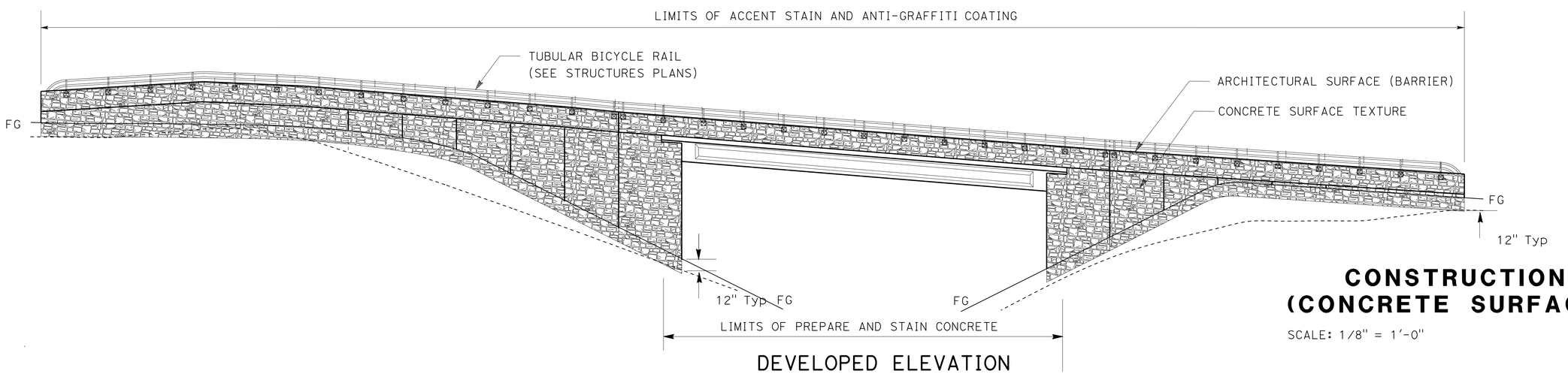

DEVELOPED ELEVATION

CONSTRUCTION DETAILS (CONCRETE SURFACE TEXTURE)

SCALE: 1/8" = 1'-0"

C-4

REVISED BY	MH	MARTY HOGAN	
DATE REVISED	4/14/14	SUSAN LINDSAY	
CALCULATED-DESIGNED BY		FUNCTIONAL SUPERVISOR	SUSAN LINDSAY
CHECKED BY			

STATE OF CALIFORNIA - DEPARTMENT OF TRANSPORTATION
Caltrans® LANDSCAPE ARCHITECTURE

LAST REVISION 04-24-14 | DATE PLOTTED => 08-SEP-2014 | TIME PLOTTED => 11:01

Dist	COUNTY	ROUTE	POST MILES TOTAL PROJECT	SHEET No.	TOTAL SHEETS
04	NAP	29	47.0/42.2	10	146

LICENSED LANDSCAPE ARCHITECT

6-23-14
PLANS APPROVAL DATE

LICENSED LANDSCAPE ARCHITECT
MARTIN A. HOGAN No. 4054
Signature
3-31-15
Renewal Date
4-24-14
Date
STATE OF CALIFORNIA

THE STATE OF CALIFORNIA OR ITS OFFICERS OR AGENTS SHALL NOT BE RESPONSIBLE FOR THE ACCURACY OR COMPLETENESS OF SCANNED COPIES OF THIS PLAN SHEET.

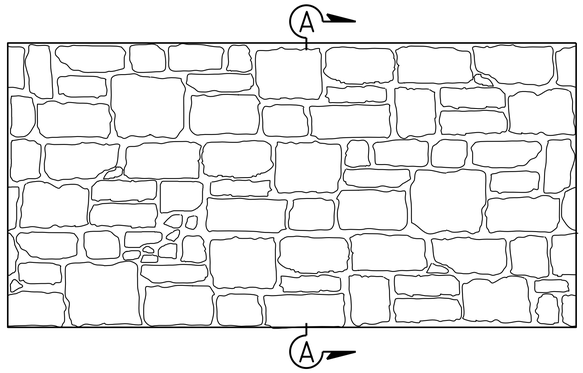

ASHLAR STONE TEXTURE
No Scale

STONE SIZE = 6"-28" (Horizontal)
STONE SIZE = 6"-18" (Vertical)

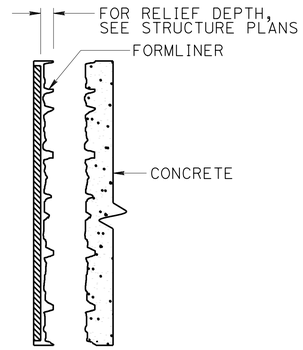

SECTION A-A
No Scale

CONCRETE BASE STAINS

Description	FED-STD-595 color no.	Percentage of surface area	Product
Dark Brown	34084	40%	Stain
Medium Brown	30099	25%	Stain
Medium Grey	36492	20%	Stain
Tan	33448	15%	Stain

NOTE:
The final color of the stained concrete must incorporate the colors of FED-STD-595 as shown on plans.

ACCENT COLORS

Description	FED-STD-595 color no.	Percentage of surface area	Product
Black	37038	15% Mottling	Stain
Light Gold	33245	15% Flecking	Paint
Medium Gold	30215	60% Flecking	Paint
Dark Rust	30111	10% Flecking	Paint

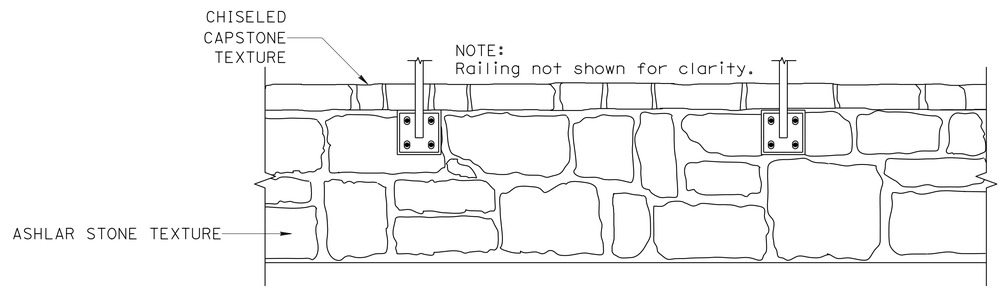

ASHLAR STONE TEXTURE (ON OUTSIDE FACE OF MODIFIED BARRIER)
No Scale

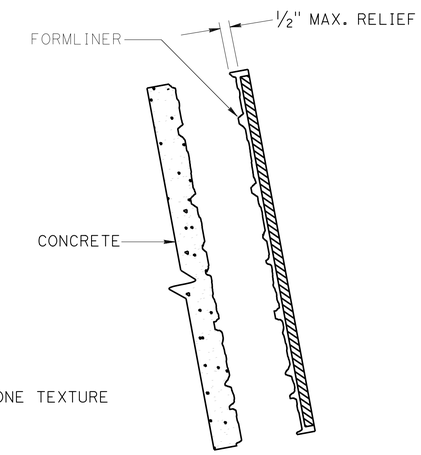

SECTION B-B
No Scale

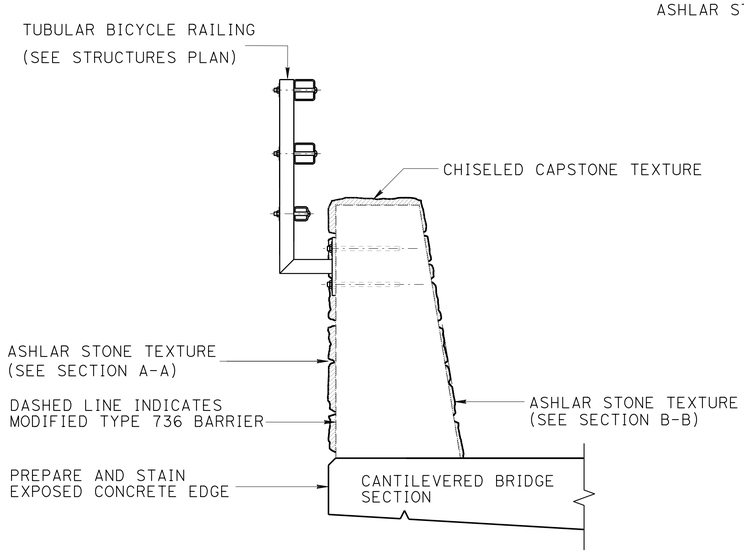

TYPICAL SECTION
No Scale

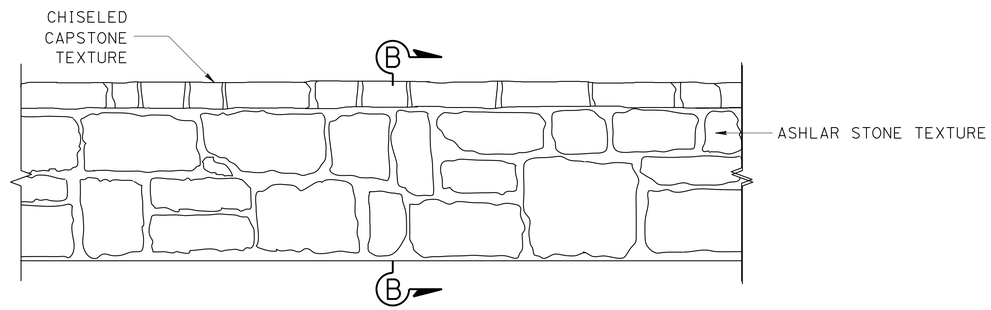

ASHLAR STONE TEXTURE (ON INSIDE FACE OF MODIFIED BARRIER)
No Scale

MAXIMUM RELIEF = ½"
AVERAGE RELIEF = ¼"
MAXIMUM HORIZONTAL STONE SIZE = 6"-28"
MAXIMUM VERTICAL STONE SIZE = 6"-21"

NOTE:
Chiseled Capstone Texture shall be 18" maximum width and make up of 65% to 75% with a random placement of 5" to 9" width.

CONSTRUCTION DETAILS
ARCHITECTURAL SURFACE BARRIER

C-5

REVISED BY	DATE REVISED
MH	4/24/14

MARTY HOGAN
SUSAN LINDSAY

CALCULATED-DESIGNED BY
CHECKED BY

FUNCTIONAL SUPERVISOR
SUSAN LINDSAY

STATE OF CALIFORNIA - DEPARTMENT OF TRANSPORTATION
Caltrans
LANDSCAPE ARCHITECTURE

LAST REVISION 04-24-14
DATE PLOTTED => 08-SEP-2014
TIME PLOTTED => 11:01

Dist	COUNTY	ROUTE	POST MILES TOTAL PROJECT	SHEET No.	TOTAL SHEETS
04	Nap	29	47.0/47.2	11	146

REGISTERED CIVIL ENGINEER DATE 4/25/14

6-23-14
PLANS APPROVAL DATE

REGISTERED PROFESSIONAL ENGINEER Ganga D. Tripathi No. 78447 Exp. 9-30-16 CIVIL STATE OF CALIFORNIA

THE STATE OF CALIFORNIA OR ITS OFFICERS OR AGENTS SHALL NOT BE RESPONSIBLE FOR THE ACCURACY OR COMPLETENESS OF SCANNED COPIES OF THIS PLAN SHEET.

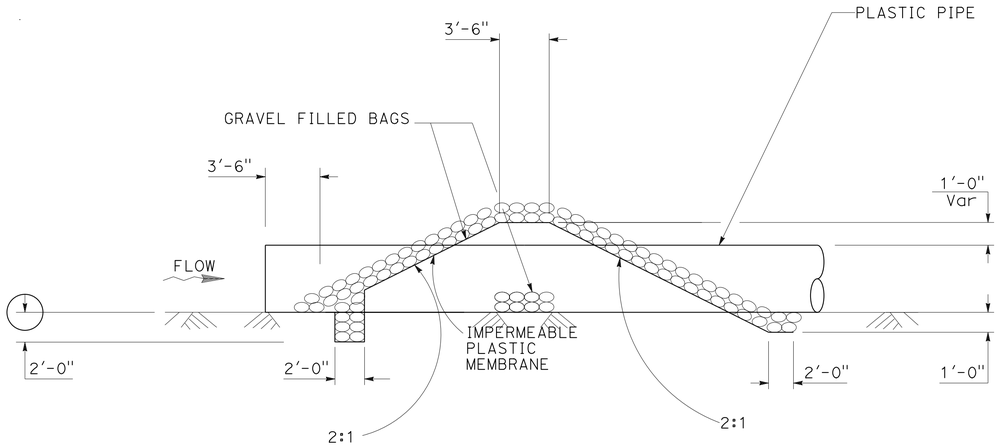

TEMPORARY UPSTREAM COFFER DAM (SECTION A-A)

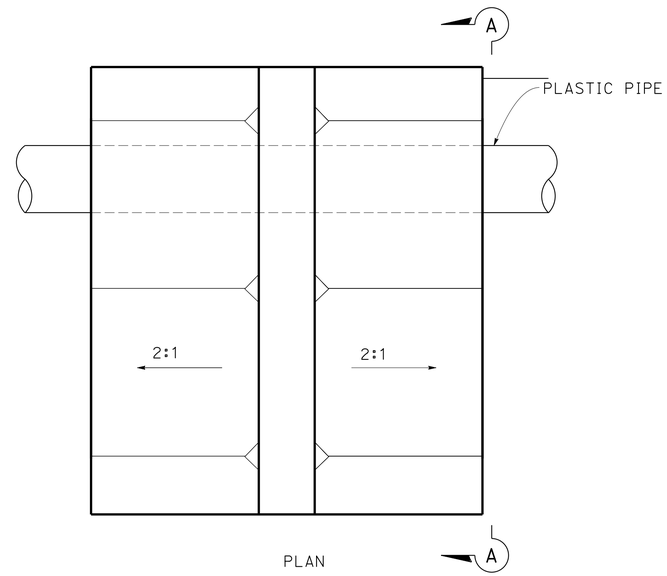

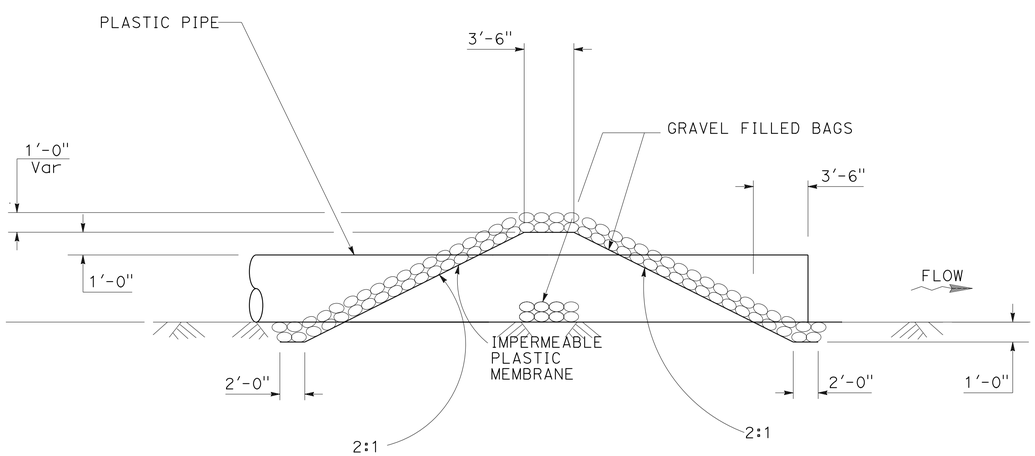

TEMPORARY DOWNSTREAM BERM (SECTION B-B)

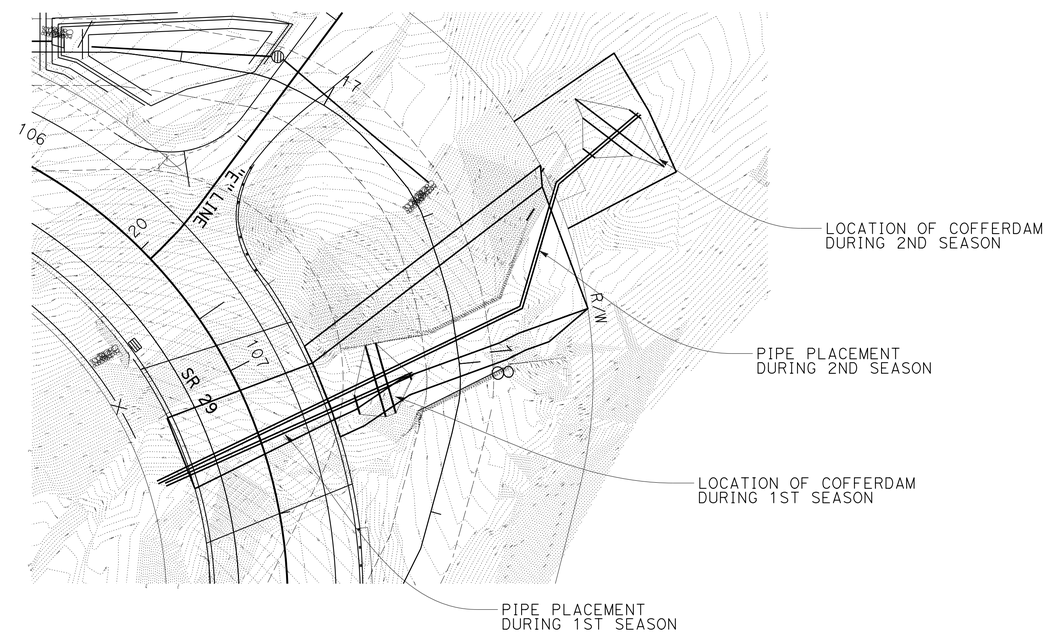

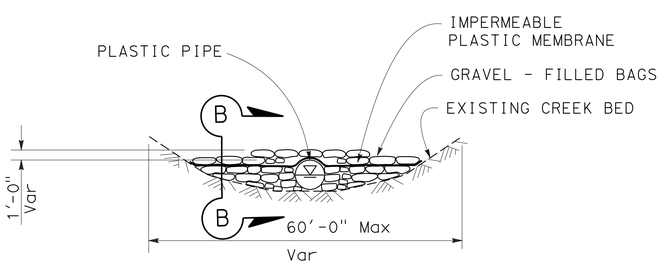

TEMPORARY DOWNSTREAM BERM

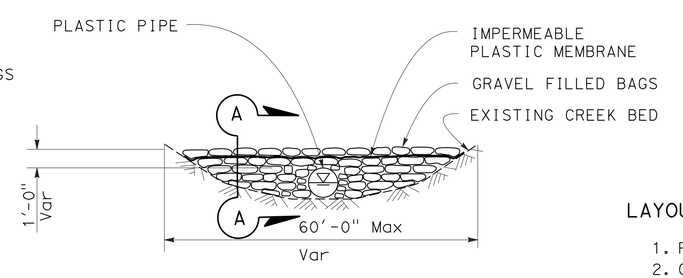

TEMPORARY UPSTREAM COFFER DAM

LAYOUT NOTES

1. PLACE GRAVEL-FILLED BAGS TIGHTLY.
2. GRAVEL-FILLED BAG ROWS AND LAYERS SHALL BE STAGGERED TO ELIMINATE GAPS.
3. DIMENSION MAY VARY TO FIT FIELD CONDITION.
4. EXACT LOCATION OF UPSTREAOFFERDAM, DOWNSTREAM COFFERDAM, AND PLASTIC PAPER SIZE TO BE DETERMINED BY CONTRACTOR'S OPERATION.

ABBREVIATION:
ESA: ENVIRONMENTALLY SENSITIVE AREA

TEMPORARY WATER POLLUTION CONTROL DETAILS

NO SCALE

WPCD-1

STATE OF CALIFORNIA - DEPARTMENT OF TRANSPORTATION
Caltrans® WATER QUALITY

FUNCTIONAL SUPERVISOR: KAMRAN NAKHJIRI
CALCULATED-DESIGNED BY: GANGA TRIPATHI
CHECKED BY: KAMRAN NAKHJIRI
REVISED BY: GT
DATE REVISED: 4/24/14

LAST REVISION 04-09-14 | DATE PLOTTED => 08-SEP-2014 | TIME PLOTTED => 11:01

Dist	COUNTY	ROUTE	POST MILES TOTAL PROJECT	SHEET No.	TOTAL SHEETS
04	Nap	29	47.0/47.2	12	146

REGISTERED CIVIL ENGINEER DATE 4/25/14

6-23-14
PLANS APPROVAL DATE

REGISTERED PROFESSIONAL ENGINEER
Ganga D. Tripathi
No. 78447
Exp. 9-30-16
CIVIL
STATE OF CALIFORNIA

THE STATE OF CALIFORNIA OR ITS OFFICERS OR AGENTS SHALL NOT BE RESPONSIBLE FOR THE ACCURACY OR COMPLETENESS OF SCANNED COPIES OF THIS PLAN SHEET.

WATER POLLUTION CONTROL QUANTITIES

WATER POLLUTION CONTROL ITEM DESCRIPTION	TEMPORARY GRAVEL BAG BERM	TEMPORARY FIBER ROLL	TEMPORARY SILT FENCE	TEMPORARY COVER	TEMPORARY CHECK DAM	TEMPORARY DRAINAGE INLET PROTECTION	TEMPORARY HYDRAULIC MULCH (BFM)	TEMPORARY CONSTRUCTION ENTRANCE	TEMPORARY CREEK DIVERSION SYSTEM	TEMPORARY CONSTRUCTION ROADWAY
UNIT	LF	LF	LF	SQYD	LF	EA	SQYD	EA	EA	SQYD
QUANTITY	170	2000	600	500	80	7	2300	4	2	200

STATE OF CALIFORNIA - DEPARTMENT OF TRANSPORTATION
Caltrans® WATER QUALITY

FUNCTIONAL SUPERVISOR: KAMRAN NAKHJIRI
CALCULATED-DESIGNED BY: GANGA TRIPATHI
CHECKED BY: KAMRAN NAKHJIRI
REVISED BY
DATE REVISED

TEMPORARY WATER POLLUTION CONTROL QUANTITIES

WPCQ-1

LAST REVISION 04-09-14
DATE PLOTTED => 08-SEP-2014
TIME PLOTTED => 11:01

Dist	COUNTY	ROUTE	POST MILES TOTAL PROJECT	SHEET No.	TOTAL SHEETS
04	Nap	29	47.0/47.2	13	146

REGISTERED CIVIL ENGINEER 4/24/14 DATE

6-23-14
PLANS APPROVAL DATE

REGISTERED PROFESSIONAL ENGINEER Jason R. Phoen No. 57553 Exp. 12-31-15 CIVIL STATE OF CALIFORNIA

THE STATE OF CALIFORNIA OR ITS OFFICERS OR AGENTS SHALL NOT BE RESPONSIBLE FOR THE ACCURACY OR COMPLETENESS OF SCANNED COPIES OF THIS PLAN SHEET.

NOTE:

FOR ACCURATE RIGHT OF WAY DATA, CONTACT RIGHT OF WAY ENGINEERING AT THE DISTRICT OFFICE.

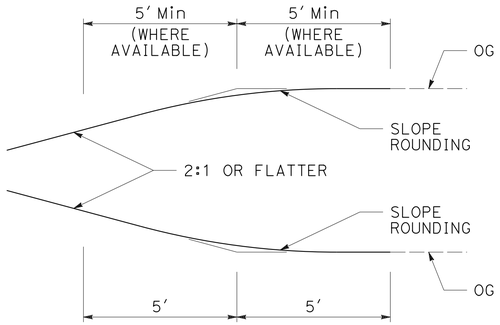

TYPICAL SECTION, SLOPE ROUNDING
(SEE NOTE 1)

NOTES:

1. ROUND THE TOP AND TOE OF SLOPES WHERE THE ROUNDING WILL NOT AFFECT SAFETY FEATURES OR FEATURES AT THE TOP OF SLOPE.
2. SLOPES ARE SUBJECT TO TOLERANCES SPECIFIED IN THE STANDARD SPECIFICATIONS.

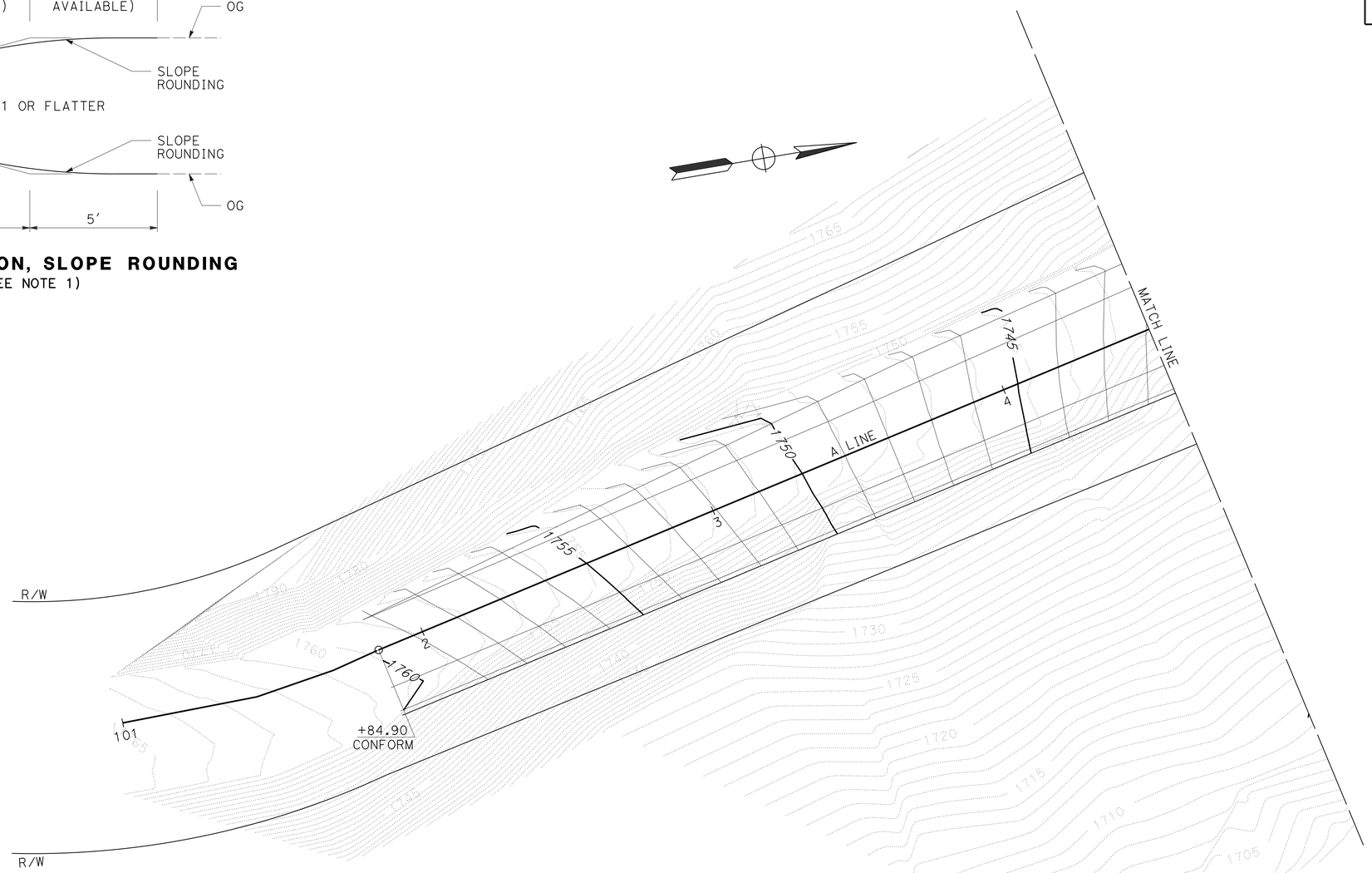

CONTOUR GRADING
SCALE: 1" = 20'

APPROVED FOR CONTOUR GRADING WORK ONLY

G-1

STATE OF CALIFORNIA - DEPARTMENT OF TRANSPORTATION
Caltrans® **DESIGN**

FUNCTIONAL SUPERVISOR: STEWART LEE
CALCULATED-DESIGNED BY: JASON R PHOEN
CHECKED BY: STEWART LEE
REVISED BY: JRP
DATE REVISED: 4/24/14

LAST REVISION 04-16-14
DATE PLOTTED => 08-SEP-2014
TIME PLOTTED => 11:01

Dist	COUNTY	ROUTE	POST MILES TOTAL PROJECT	SHEET No.	TOTAL SHEETS
04	Nap	29	47.0/47.2	14	146

REGISTERED CIVIL ENGINEER 4/24/14 DATE

6-23-14
PLANS APPROVAL DATE

REGISTERED PROFESSIONAL ENGINEER Jason R. Phoen No. 57553 Exp. 12-31-15 CIVIL STATE OF CALIFORNIA

THE STATE OF CALIFORNIA OR ITS OFFICERS OR AGENTS SHALL NOT BE RESPONSIBLE FOR THE ACCURACY OR COMPLETENESS OF SCANNED COPIES OF THIS PLAN SHEET.

NOTE:

FOR ACCURATE RIGHT OF WAY DATA, CONTACT RIGHT OF WAY ENGINEERING AT THE DISTRICT OFFICE.

APPROVED FOR CONTOUR GRADING WORK ONLY

FOR NOTES, ABBREVIATIONS AND LEGEND, SEE SHEET G-1

CONTOUR GRADING

SCALE: 1" = 20'

G-2

STATE OF CALIFORNIA - DEPARTMENT OF TRANSPORTATION
Caltrans®
DESIGN

FUNCTIONAL SUPERVISOR: STEWART LEE
CALCULATED-DESIGNED BY: JASON R PHOEN
CHECKED BY: STEWART LEE
REVISED BY: JRP
DATE REVISED: 4/24/14

LAST REVISION 04-09-14
DATE PLOTTED => 08-SEP-2014
TIME PLOTTED => 11:01

Dist	COUNTY	ROUTE	POST MILES TOTAL PROJECT	SHEET No.	TOTAL SHEETS
04	Nap	29	47.0/47.2	15	146

REGISTERED CIVIL ENGINEER 4/24/14 DATE

6-23-14
PLANS APPROVAL DATE

REGISTERED PROFESSIONAL ENGINEER Jason R. Phoen No. 57553 Exp. 12-31-15 CIVIL STATE OF CALIFORNIA

THE STATE OF CALIFORNIA OR ITS OFFICERS OR AGENTS SHALL NOT BE RESPONSIBLE FOR THE ACCURACY OR COMPLETENESS OF SCANNED COPIES OF THIS PLAN SHEET.

NOTE:

FOR ACCURATE RIGHT OF WAY DATA, CONTACT RIGHT OF WAY ENGINEERING AT THE DISTRICT OFFICE.

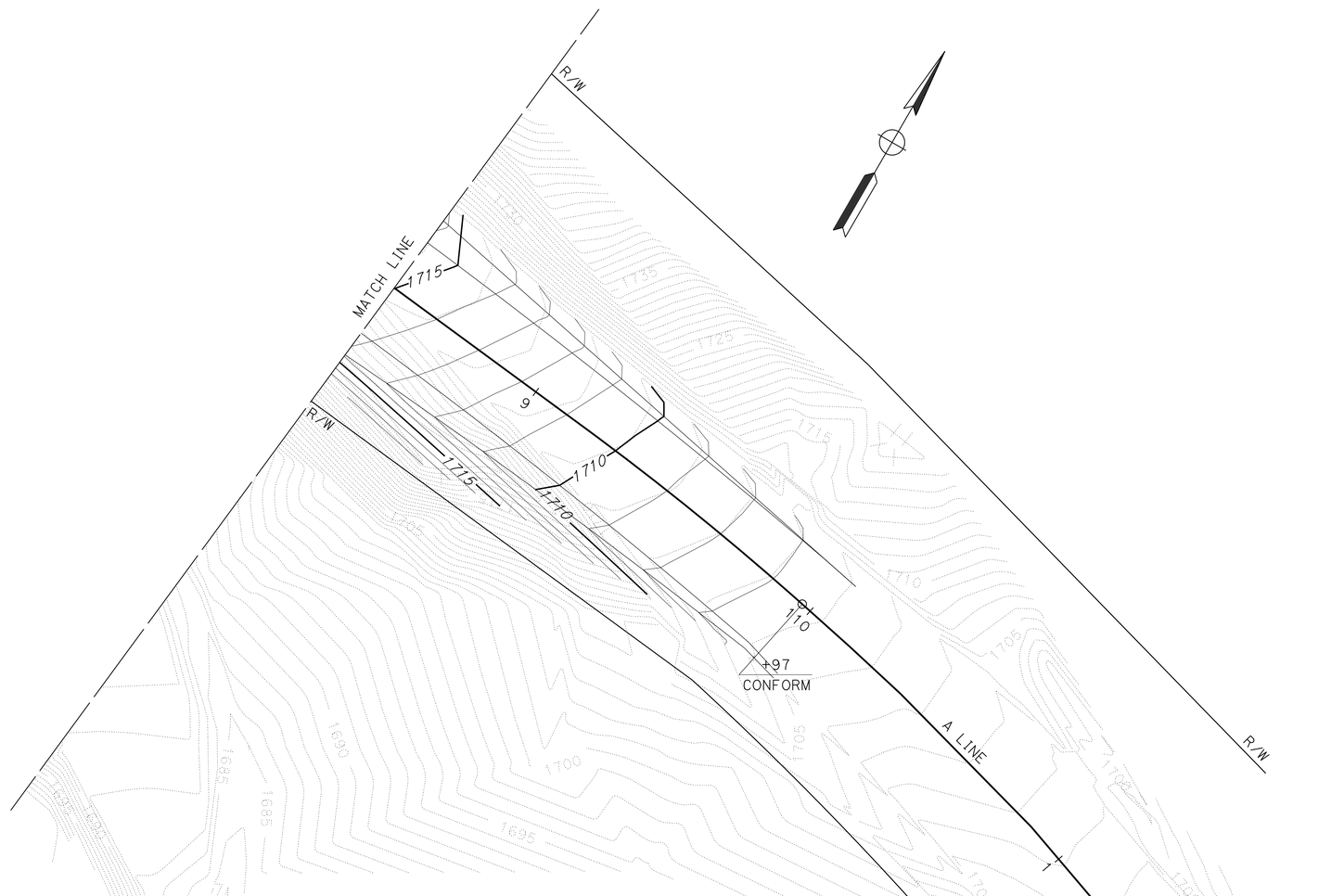

CONTOUR GRADING

SCALE: 1" = 20'

APPROVED FOR CONTOUR GRADING WORK ONLY

FOR NOTES, ABBREVIATIONS AND LEGEND, SEE SHEET G-1

G-3

STATE OF CALIFORNIA - DEPARTMENT OF TRANSPORTATION
Caltrans
DESIGN

FUNCTIONAL SUPERVISOR: STEWART LEE
CALCULATED-DESIGNED BY: JASON R PHOEN
CHECKED BY: STEWART LEE
REVISED BY: JRP
DATE REVISED: 4/24/14

LAST REVISION 04-09-14
DATE PLOTTED => 08-SEP-2014
TIME PLOTTED => 11:01

Dist	COUNTY	ROUTE	POST MILES TOTAL PROJECT	SHEET No.	TOTAL SHEETS
04	Nap	29	47.0/47.2	16	146

REGISTERED CIVIL ENGINEER DATE 4/24/14

6-23-14
PLANS APPROVAL DATE

REGISTERED PROFESSIONAL ENGINEER Jason R. Phoen No. 57553 Exp. 12-31-15 CIVIL STATE OF CALIFORNIA

THE STATE OF CALIFORNIA OR ITS OFFICERS OR AGENTS SHALL NOT BE RESPONSIBLE FOR THE ACCURACY OR COMPLETENESS OF SCANNED COPIES OF THIS PLAN SHEET.

NOTE:

FOR ACCURATE RIGHT OF WAY DATA, CONTACT RIGHT OF WAY ENGINEERING AT THE DISTRICT OFFICE.

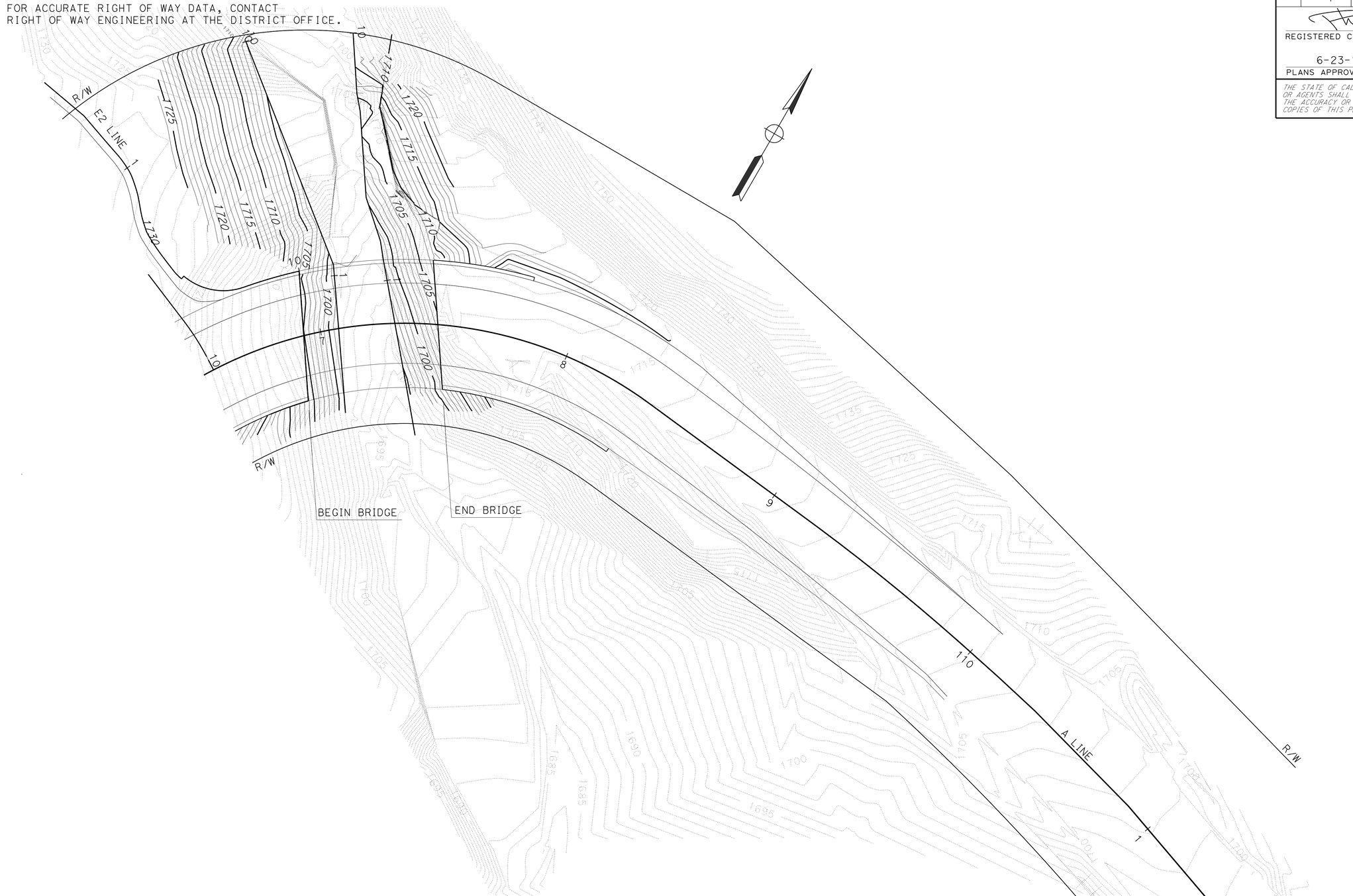

CONTOUR GRADING

SCALE: 1" = 20'

APPROVED FOR CONTOUR GRADING WORK ONLY

FOR NOTES, ABBREVIATIONS AND LEGEND, SEE SHEET G-1

G-4

STATE OF CALIFORNIA - DEPARTMENT OF TRANSPORTATION

Caltrans

DESIGN

FUNCTIONAL SUPERVISOR: STEWART LEE

CALCULATED-DESIGNED BY: JASON R PHOEN

CHECKED BY: STEWART LEE

REVISED BY: JRP

DATE REVISED: 4/24/14

LAST REVISION: 04-16-14

DATE PLOTTED => 08-SEP-2014

TIME PLOTTED => 11:01

Dist	COUNTY	ROUTE	POST MILES TOTAL PROJECT	SHEET No.	TOTAL SHEETS
04	Nap	29	47.0/47.2	17	146

REGISTERED CIVIL ENGINEER 4/18/14 DATE

6-23-14
PLANS APPROVAL DATE

REGISTERED PROFESSIONAL ENGINEER Khai Shoon Leong No. 76183 Exp. 6-30-14 CIVIL STATE OF CALIFORNIA

THE STATE OF CALIFORNIA OR ITS OFFICERS OR AGENTS SHALL NOT BE RESPONSIBLE FOR THE ACCURACY OR COMPLETENESS OF SCANNED COPIES OF THIS PLAN SHEET.

NOTE:

FOR ACCURATE RIGHT OF WAY DATA, CONTACT RIGHT OF WAY ENGINEERING AT THE DISTRICT OFFICE.

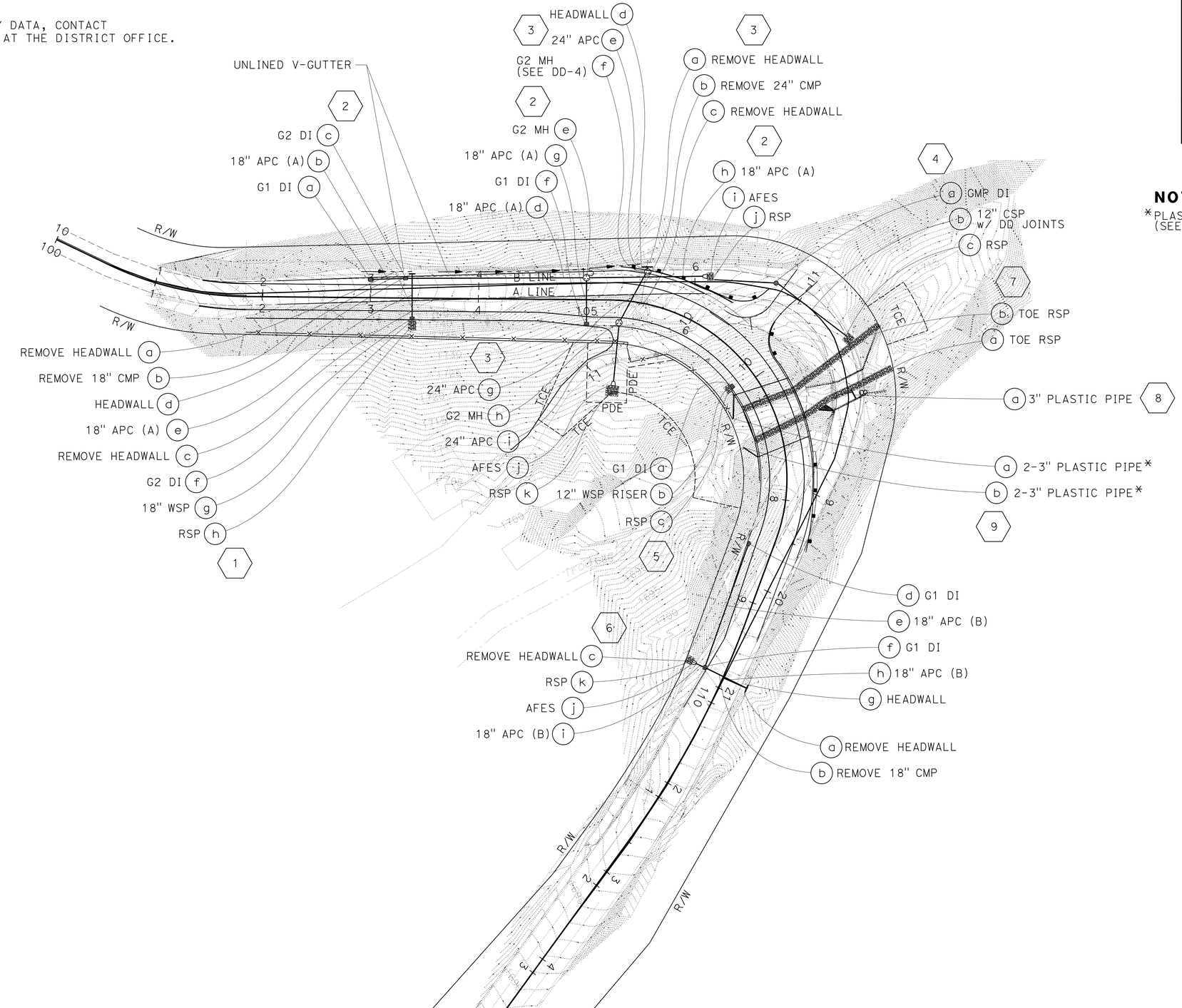

NOTE:

*PLASTIC PIPE CONNECT TO THE ABUTMENT DRAINS (SEE STRUCTURE PLANS)

APPROVED FOR DRAINAGE WORK ONLY

DRAINAGE PLAN

SCALE: 1" = 50'

D-1

REVISED BY	KSL
DATE REVISED	4/24/14
CALCULATED-DESIGNED BY	KHAI SHOON LEONG
CHECKED BY	KATHLEEN REILLY
FUNCTIONAL SUPERVISOR	KATHEEN REILLY

STATE OF CALIFORNIA - DEPARTMENT OF TRANSPORTATION
Caltrans
HYDRAULICS

LAST REVISION 06-19-14 | DATE PLOTTED => 08-SEP-2014 | TIME PLOTTED => 11:02

Dist	COUNTY	ROUTE	POST MILES TOTAL PROJECT	SHEET No.	TOTAL SHEETS
04	Nap	29	47.0/47.2	18	146

REGISTERED CIVIL ENGINEER 4/24/14 DATE

6-23-14
PLANS APPROVAL DATE

REGISTERED PROFESSIONAL ENGINEER Jason R. Phoen No. 57553 Exp. 12-31-15 CIVIL STATE OF CALIFORNIA

THE STATE OF CALIFORNIA OR ITS OFFICERS OR AGENTS SHALL NOT BE RESPONSIBLE FOR THE ACCURACY OR COMPLETENESS OF SCANNED COPIES OF THIS PLAN SHEET.

ABBREVIATIONS:

TG = TOP OF GRATE
TOC = TOP OF COVER

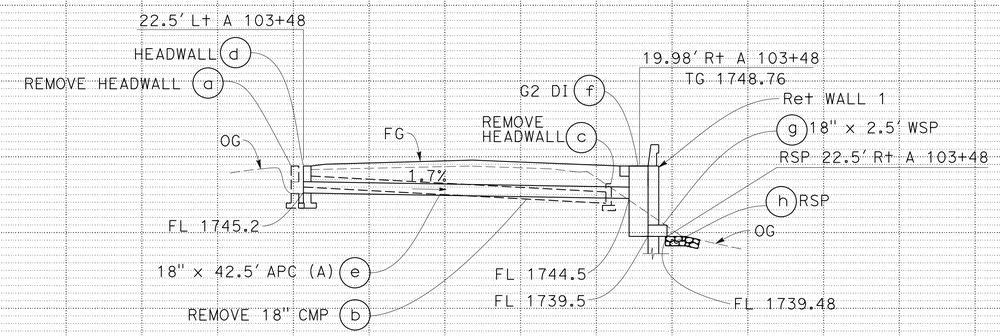

DRAINAGE SYSTEM No. 1

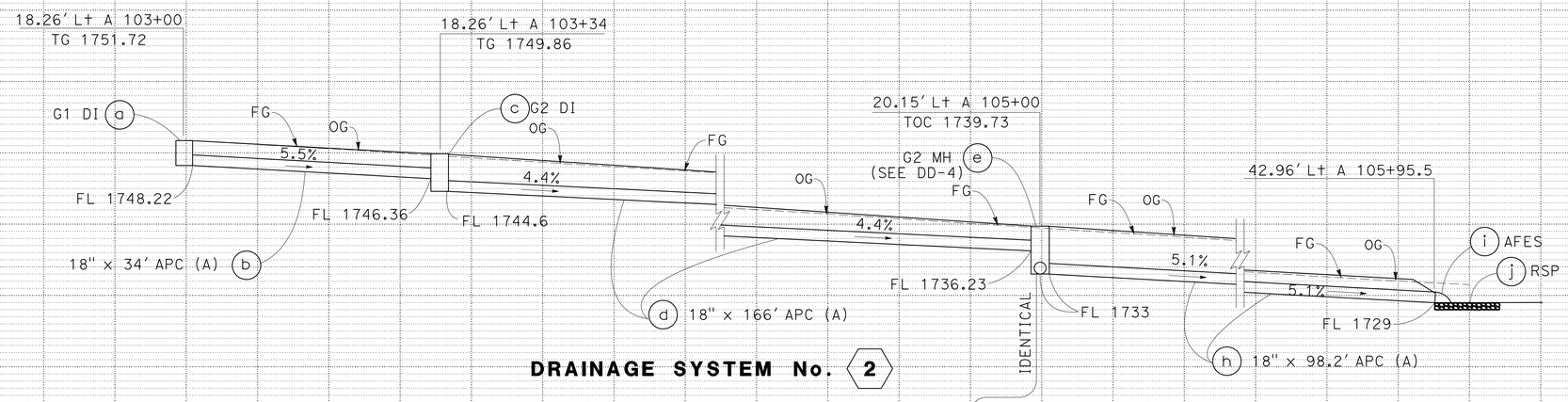

DRAINAGE SYSTEM No. 2

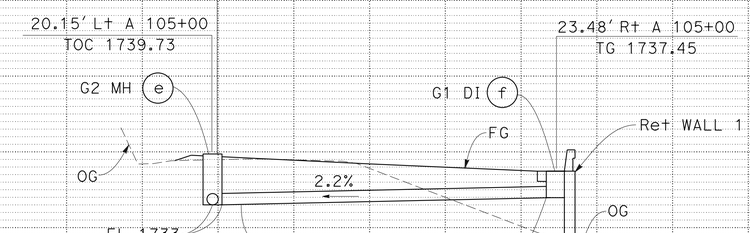

DRAINAGE SYSTEM No. 2

DRAINAGE PROFILES

SCALE: HORIZ 1" = 10'
VERT 1" = 10'

DP-1

STATE OF CALIFORNIA - DEPARTMENT OF TRANSPORTATION
Caltrans
HYDRAULICS

FUNCTIONAL SUPERVISOR: STEWART LEE
CALCULATED-DESIGNED BY: JRP
CHECKED BY: STEWART LEE
REVISED BY: JASON R PHOEN
DATE REVISED: 4/24/14

LAST REVISION 06-24-14
DATE PLOTTED => 08-SEP-2014
TIME PLOTTED => 11:02

Dist	COUNTY	ROUTE	POST MILES TOTAL PROJECT	SHEET No.	TOTAL SHEETS
04	Nap	29	47.0/47.2	19	146

REGISTERED CIVIL ENGINEER DATE 4/24/14

6-23-14
PLANS APPROVAL DATE

REGISTERED PROFESSIONAL ENGINEER Jason R. Phoen No. 57553 Exp. 12-31-15 CIVIL STATE OF CALIFORNIA

THE STATE OF CALIFORNIA OR ITS OFFICERS OR AGENTS SHALL NOT BE RESPONSIBLE FOR THE ACCURACY OR COMPLETENESS OF SCANNED COPIES OF THIS PLAN SHEET.

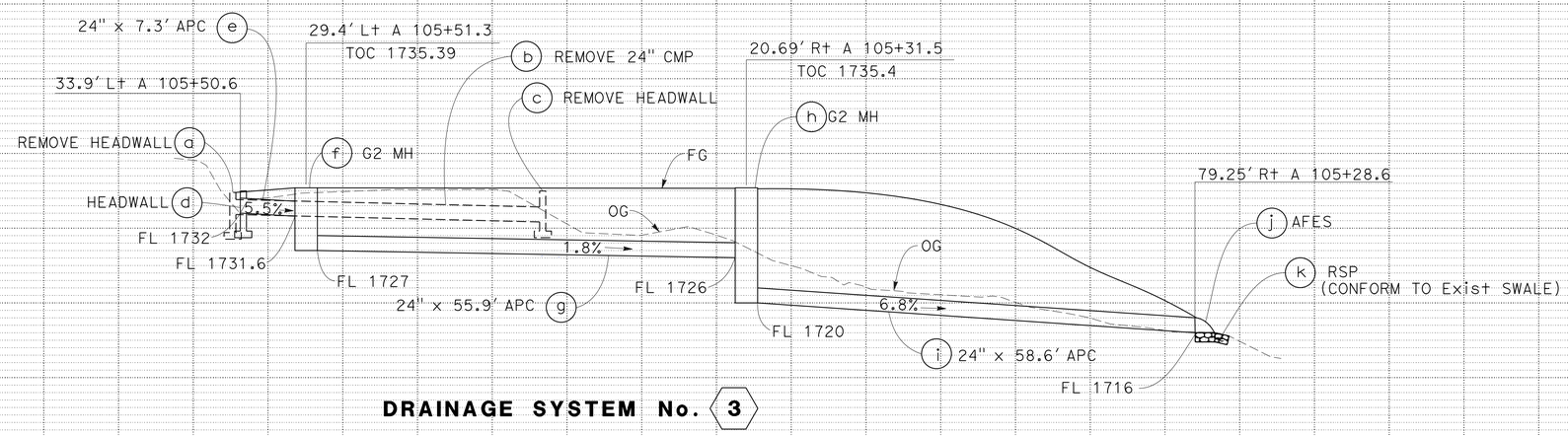

DRAINAGE SYSTEM No. 3

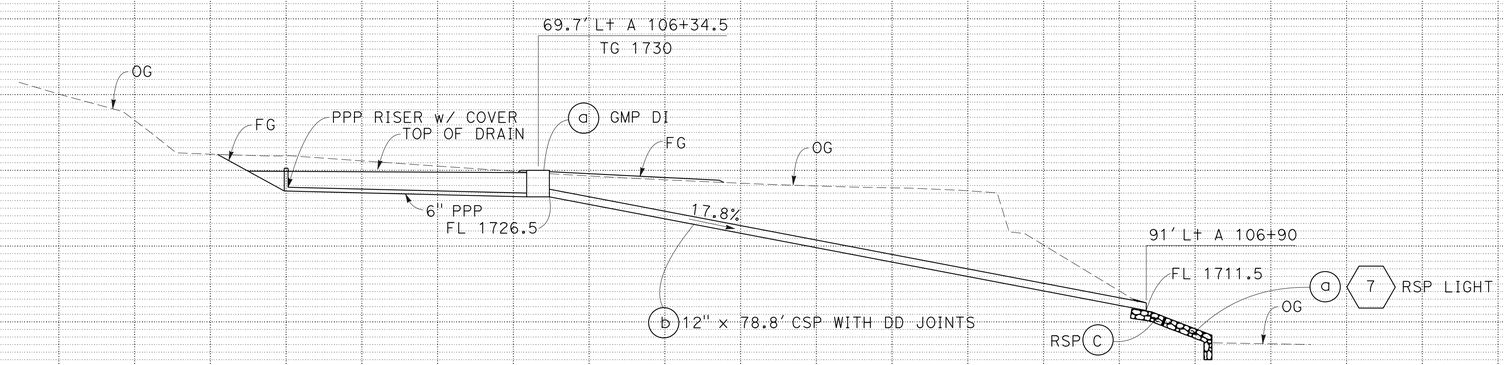

DRAINAGE SYSTEM No. 4

FOR ABBREVIATIONS, SEE SHEET DP-1

DRAINAGE PROFILES

SCALE: HORIZ 1" = 10'
VERT 1" = 10'

DP-2

STATE OF CALIFORNIA - DEPARTMENT OF TRANSPORTATION
Caltrans
HYDRAULICS

FUNCTIONAL SUPERVISOR: STEWART LEE
CALCULATED-DESIGNED BY: JASON R PHOEN
CHECKED BY: STEWART LEE
REVISED BY: JRP
DATE REVISED: 4/24/14

LAST REVISION DATE PLOTTED => 08-SEP-2014
TIME PLOTTED => 11:02
06-24-14

Dist	COUNTY	ROUTE	POST MILES TOTAL PROJECT	SHEET No.	TOTAL SHEETS
04	Nap	29	47.0/47.2	20	146

REGISTERED CIVIL ENGINEER DATE 4/24/14

6-23-14
PLANS APPROVAL DATE

REGISTERED PROFESSIONAL ENGINEER Jason R. Phoen No. 57553 Exp. 12-31-15 CIVIL STATE OF CALIFORNIA

THE STATE OF CALIFORNIA OR ITS OFFICERS OR AGENTS SHALL NOT BE RESPONSIBLE FOR THE ACCURACY OR COMPLETENESS OF SCANNED COPIES OF THIS PLAN SHEET.

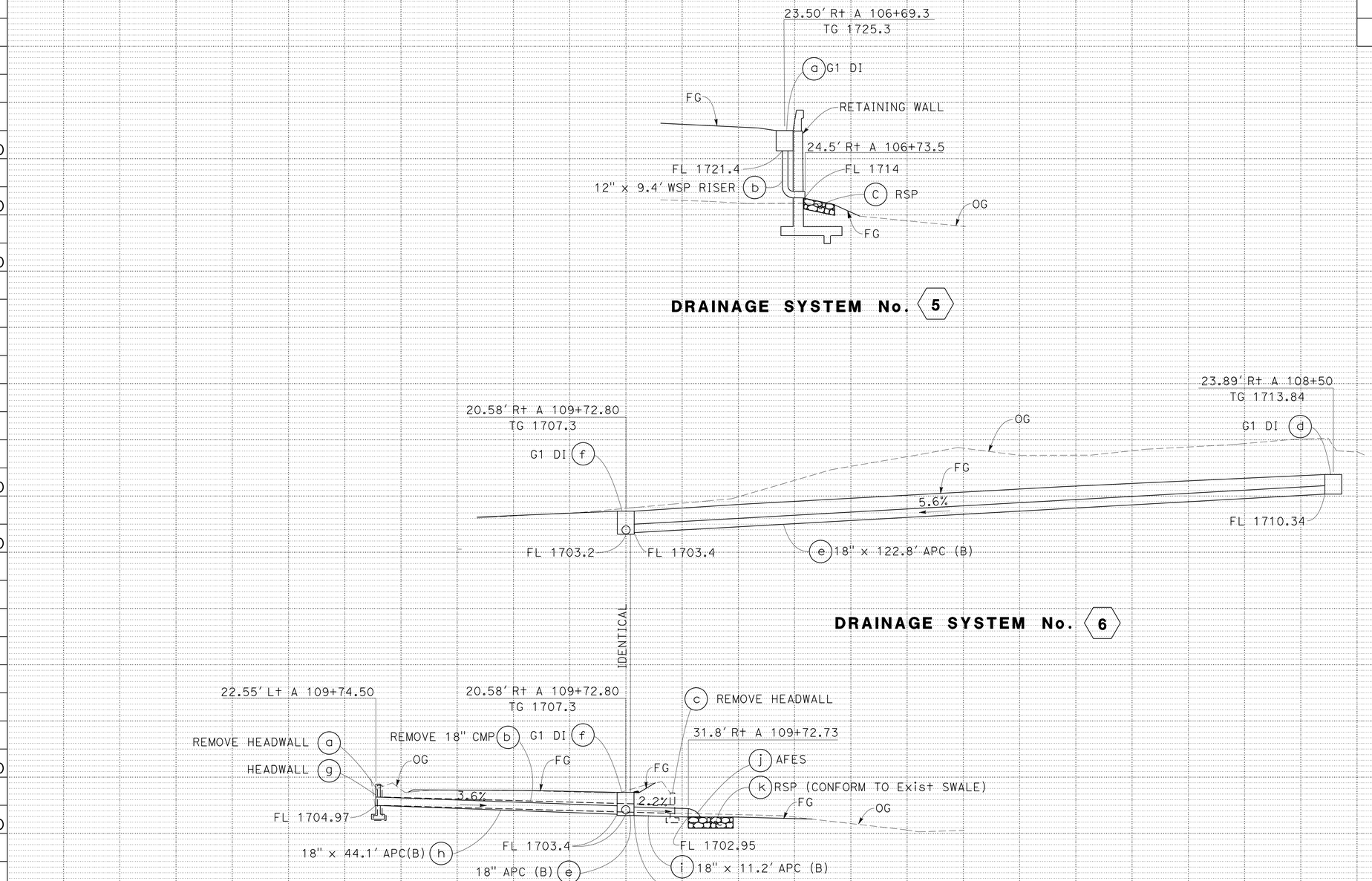

FOR ABBREVIATIONS, SEE SHEET DP-1

DRAINAGE PROFILES

SCALE: HORIZ 1" = 10'
VERT 1" = 10'

DP-3

STATE OF CALIFORNIA - DEPARTMENT OF TRANSPORTATION
Caltrans
HYDRAULICS

FUNCTIONAL SUPERVISOR: STEWART LEE

CALCULATED-DESIGNED BY: JASON R PHOEN
CHECKED BY: STEWART LEE

REVISED BY: KSL
DATE REVISED: 4/24/14

LAST REVISION 04-12-14 | DATE PLOTTED => 08-SEP-2014 | TIME PLOTTED => 11:02

Dist	COUNTY	ROUTE	POST MILES TOTAL PROJECT	SHEET No.	TOTAL SHEETS
04	Nap	29	47.0/47.2	21	146

REGISTERED CIVIL ENGINEER DATE 4/24/14

PLANS APPROVAL DATE 6-23-14

REGISTERED PROFESSIONAL ENGINEER Khai Shoon Leong No. 76183 Exp. 6-30-14 CIVIL STATE OF CALIFORNIA

THE STATE OF CALIFORNIA OR ITS OFFICERS OR AGENTS SHALL NOT BE RESPONSIBLE FOR THE ACCURACY OR COMPLETENESS OF SCANNED COPIES OF THIS PLAN SHEET.

NOTE:

1. FOR INFORMATION NOT SHOWN, SEE Std PLAN D73 THROUGH D74B.

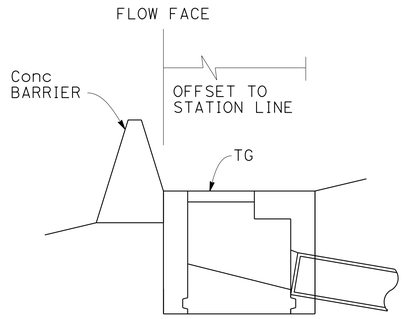

SECTION B-B

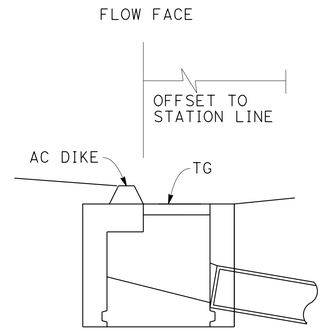

SECTION C-C

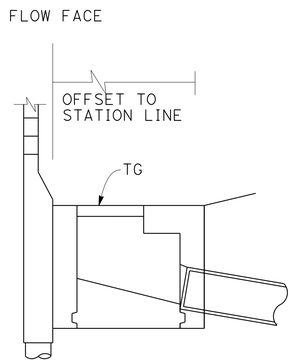

SECTION A-A

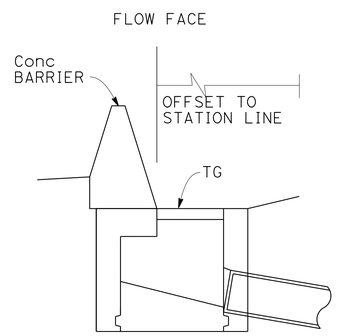

SECTION D-D

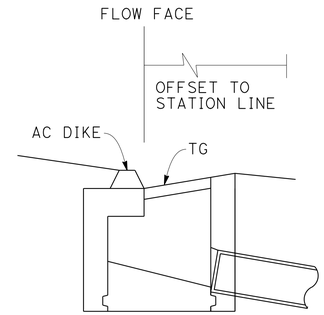

ELEVATION

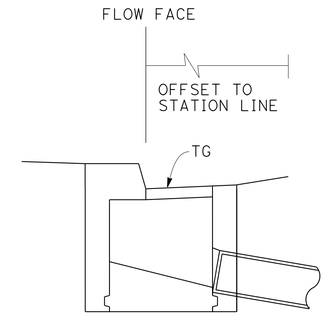

ELEVATION

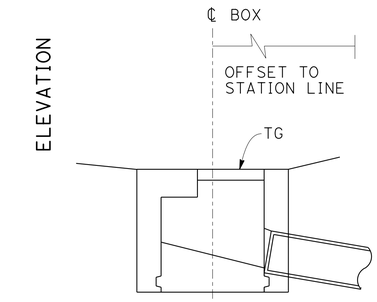

ELEVATION

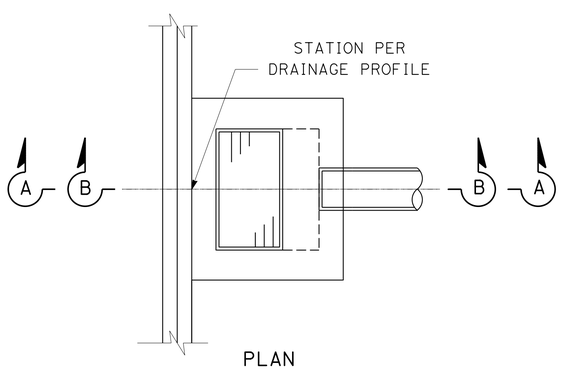

PLAN

INLET ADJACENT TO SOUNDWALL (SECTION A-A) **OR CONCRETE BARRIER** (SECTION B-B)

(TYPES 60E, 60GE, 60SC, 60SE, OR HIGH SIDE OF TYPES 60C, 60GC)

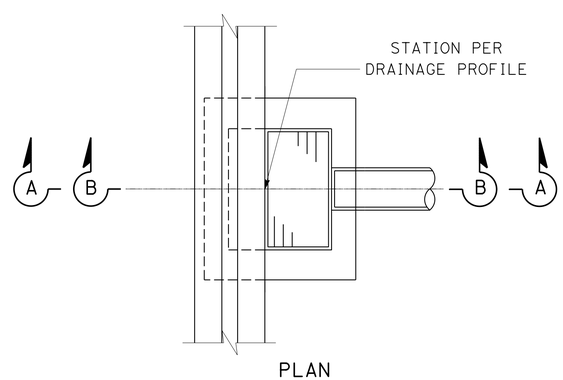

PLAN

INLET ADJACENT TO AC DIKE (SECTION C-C) **OR CONCRETE BARRIER** (SECTION D-D)

(TYPE 60C SHOWN, TYPES 60, 60G, 60GC SIMILAR)

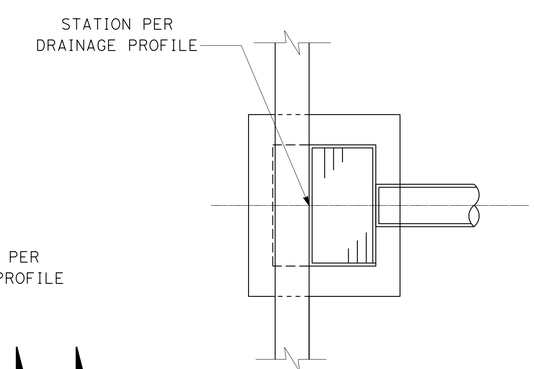

PLAN

INLET WITHIN AC SIDE GUTTER

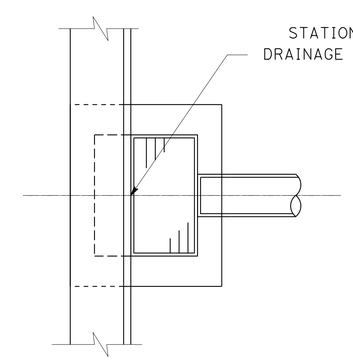

PLAN

INLET ADJACENT TO CURB

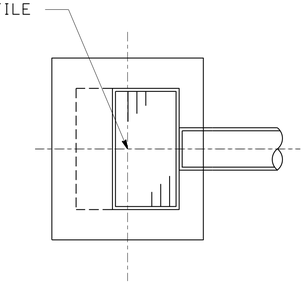

PLAN

FIELD INLET

DRAINAGE DETAILS

NO SCALE

DD-1

STATE OF CALIFORNIA - DEPARTMENT OF TRANSPORTATION

Caltrans

HYDRAULICS

FUNCTIONAL SUPERVISOR: KATHEEN REILLY

CALCULATED-DESIGNED BY: KHAI SHOON LEONG

CHECKED BY: KATHLEEN REILLY

REVISED BY: KSL

DATE REVISED: 4/24/14

LAST REVISION 04-15-14

DATE PLOTTED => 08-SEP-2014

TIME PLOTTED => 11:02

Dist	COUNTY	ROUTE	POST MILES TOTAL PROJECT	SHEET No.	TOTAL SHEETS
04	Nap	29	47.0/47.2	22	146

REGISTERED CIVIL ENGINEER 4/24/14 DATE

6-23-14
PLANS APPROVAL DATE

REGISTERED PROFESSIONAL ENGINEER
Khai Shoon Leong
No. 76183
Exp. 6-30-14
CIVIL
STATE OF CALIFORNIA

THE STATE OF CALIFORNIA OR ITS OFFICERS OR AGENTS SHALL NOT BE RESPONSIBLE FOR THE ACCURACY OR COMPLETENESS OF SCANNED COPIES OF THIS PLAN SHEET.

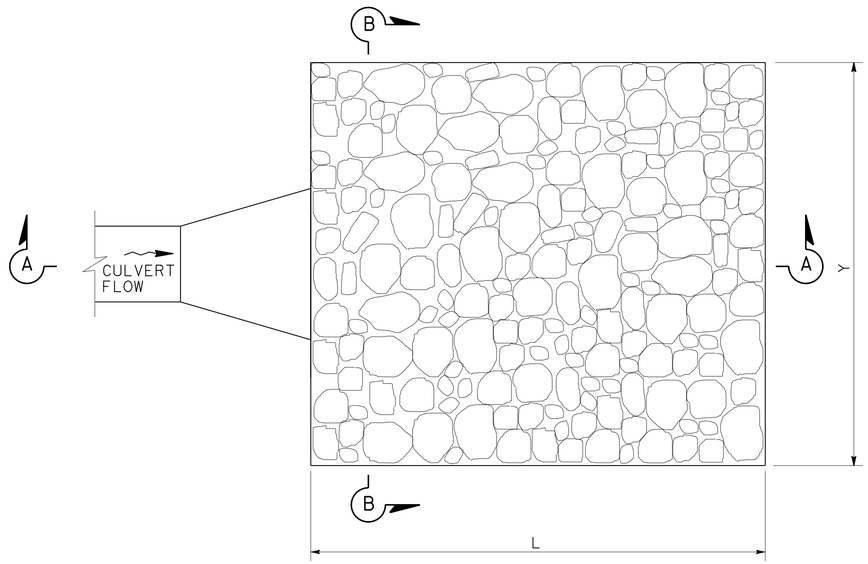

PLAN

TABLE A

DRAINAGE SYSTEM ⬡	DRAINAGE UNIT ○	L	Y	Z	RSP-FABRIC CLASS	RSP CLASS-METHOD B PLACEMENT
2	j	6′	8′	1.3′	8	No. 2 BACKING
3	k	10′	12′	2′	8	FACING
6	k	6′	8′	1.3′	8	No. 2 BACKING

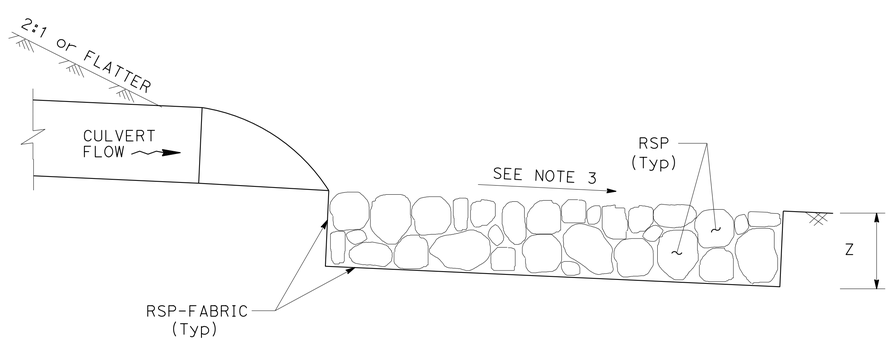

SECTION A-A

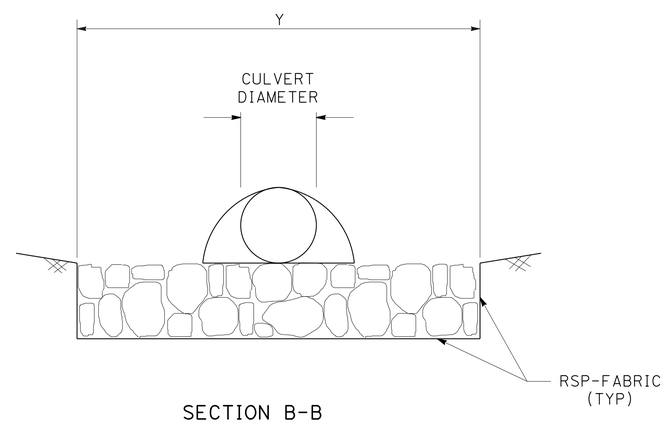

SECTION B-B

RSP AT FES

⬡2 ○j ⬡3 ○k ⬡6 ○k

DRAINAGE DETAILS

NO SCALE

DD-2

STATE OF CALIFORNIA - DEPARTMENT OF TRANSPORTATION
Caltrans
HYDRAULICS

FUNCTIONAL SUPERVISOR: KATHEEN REILLY

CALCULATED-DESIGNED BY: KHAI SHOON LEONG
CHECKED BY: KATHLEEN REILLY

REVISED BY: KSL
DATE REVISED: 4/24/14

LAST REVISION 06-02-14
DATE PLOTTED => 08-SEP-2014
TIME PLOTTED => 11:02

Dist	COUNTY	ROUTE	POST MILES TOTAL PROJECT	SHEET No.	TOTAL SHEETS
04	Nap	29	47.0/47.2	23	146

REGISTERED CIVIL ENGINEER 4/24/14 DATE

6-23-14
PLANS APPROVAL DATE

REGISTERED PROFESSIONAL ENGINEER Khai Shoon Leong No. 76183 Exp. 6-30-14 CIVIL STATE OF CALIFORNIA

THE STATE OF CALIFORNIA OR ITS OFFICERS OR AGENTS SHALL NOT BE RESPONSIBLE FOR THE ACCURACY OR COMPLETENESS OF SCANNED COPIES OF THIS PLAN SHEET.

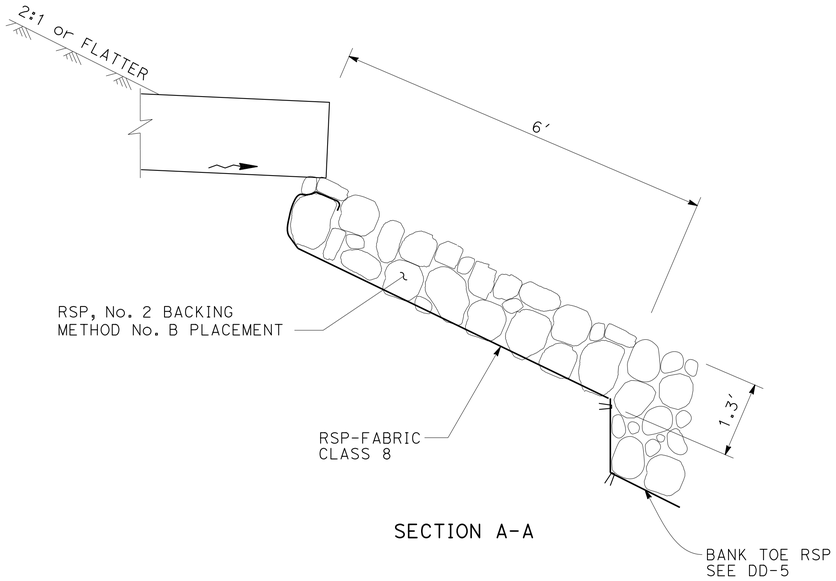

SECTION A-A

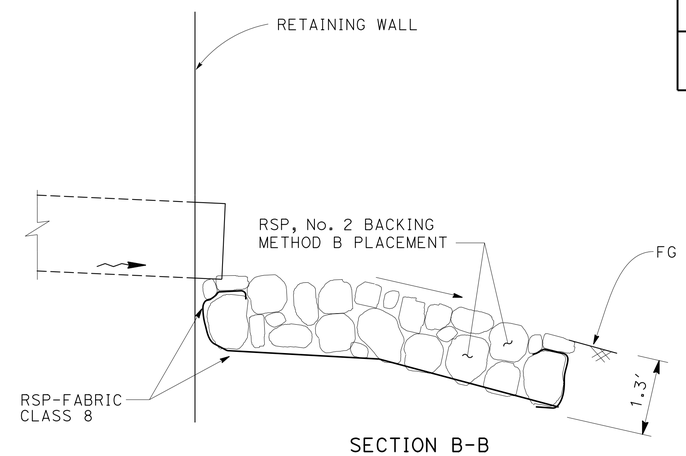

SECTION B-B

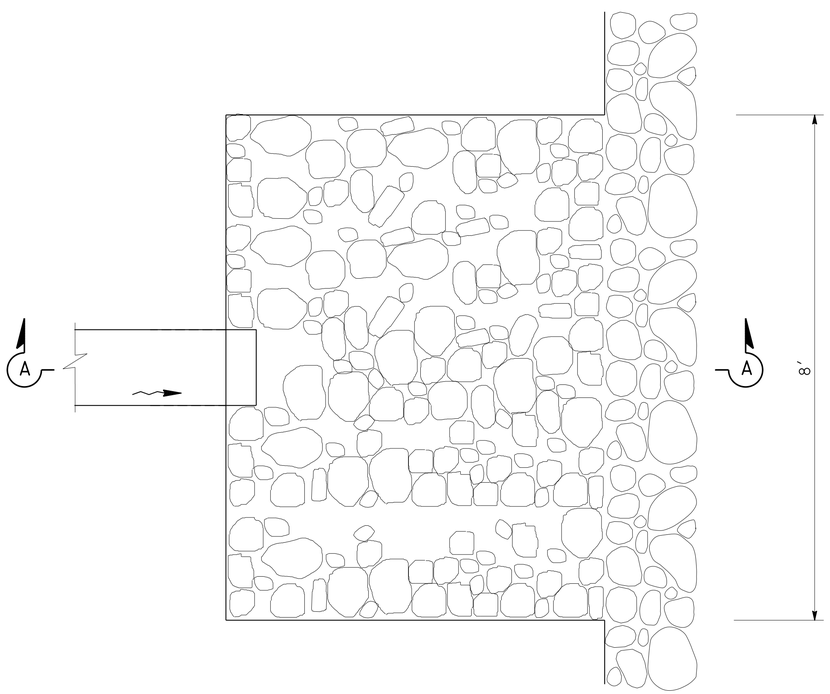

PLAN

RSP

4 c

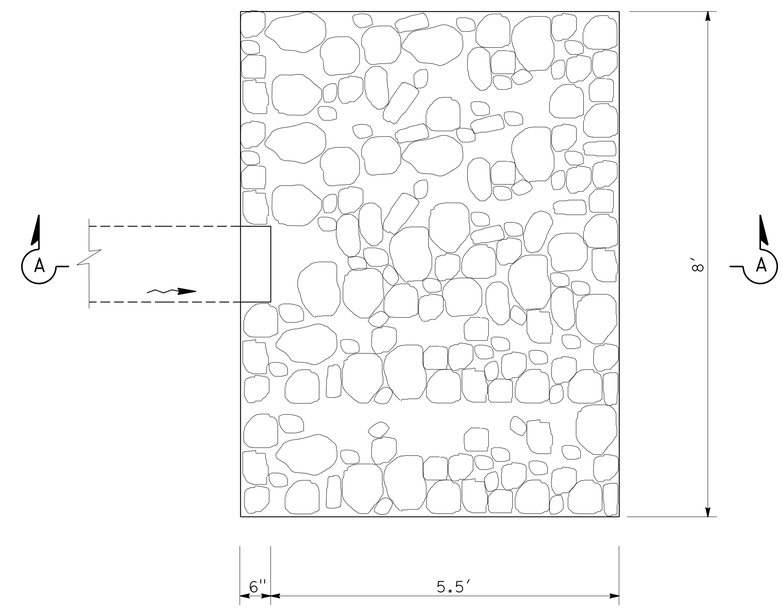

PLAN

RSP AT PIPE OUTLET

1 h

DRAINAGE DETAILS

NO SCALE

DD-3

STATE OF CALIFORNIA - DEPARTMENT OF TRANSPORTATION

Caltrans

HYDRAULICS

FUNCTIONAL SUPERVISOR: KATHEEN REILLY

CALCULATED-DESIGNED BY: KHAI SHOON LEONG

CHECKED BY: KATHLEEN REILLY

REVISED BY: KSL

DATE REVISED: 4/24/14

LAST REVISION 04-15-14

DATE PLOTTED => 08-SEP-2014

TIME PLOTTED => 11:02

Dist	COUNTY	ROUTE	POST MILES TOTAL PROJECT	SHEET No.	TOTAL SHEETS
04	Nap	29	47.0/47.2	24	146

REGISTERED CIVIL ENGINEER 4/24/14 DATE

6-23-14
PLANS APPROVAL DATE

REGISTERED PROFESSIONAL ENGINEER Khai Shoon Leong No. 76183 Exp. 6-30-14 CIVIL STATE OF CALIFORNIA

THE STATE OF CALIFORNIA OR ITS OFFICERS OR AGENTS SHALL NOT BE RESPONSIBLE FOR THE ACCURACY OR COMPLETENESS OF SCANNED COPIES OF THIS PLAN SHEET.

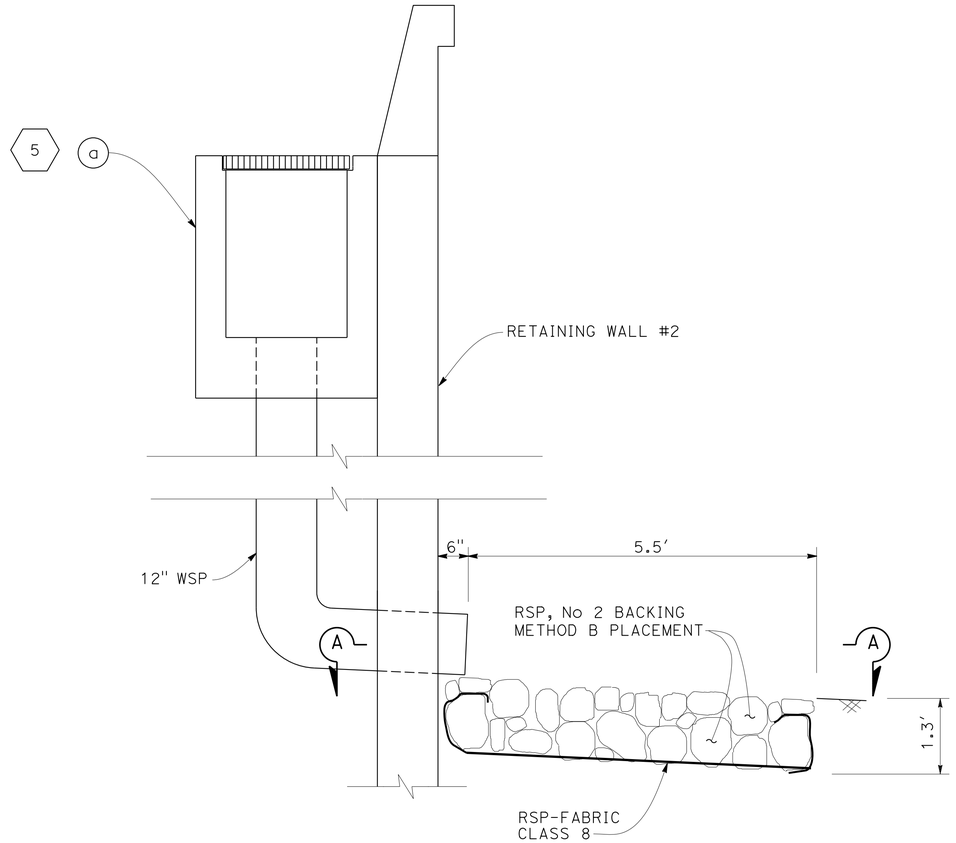

PROFILE

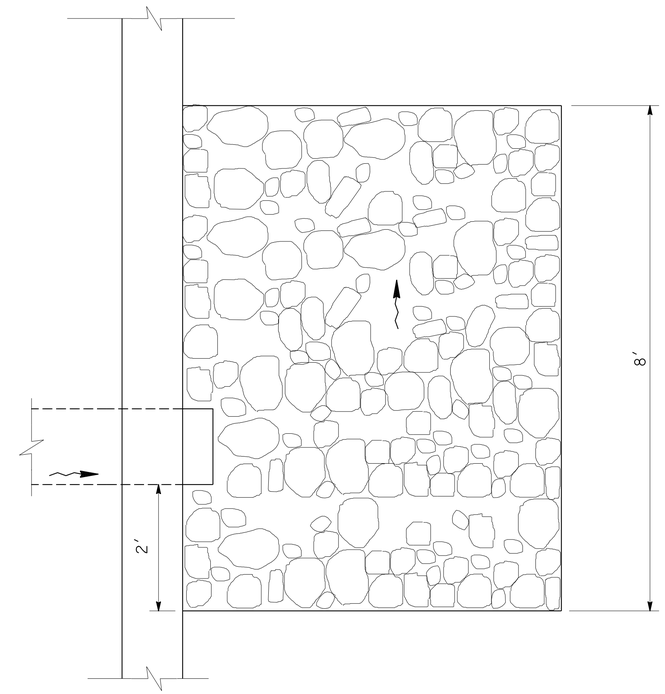

SECTION A-A

NOTE:

FOR DETAILS NOT SHOWN, SEE Std PLAN D73 - G2 INLET.

WSP THROUGH RETAINING WALL AND RSP

5 b c

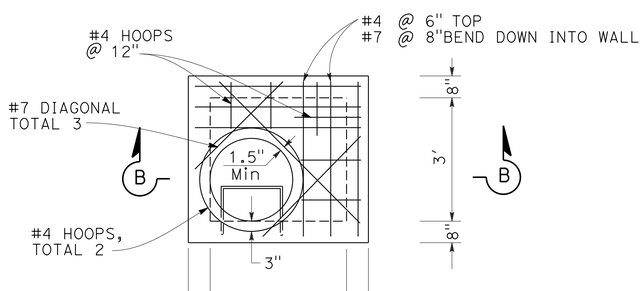

PLAN

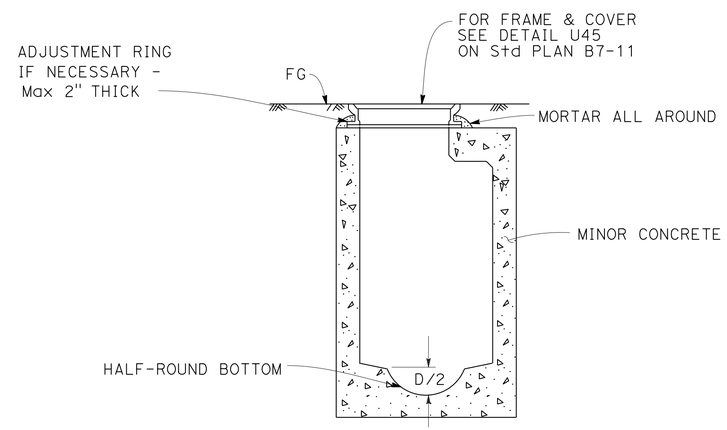

SECTION B-B

G2 MANHOLE

2 e 3 f 3 h

DRAINAGE DETAILS

NO SCALE

DD-4

STATE OF CALIFORNIA - DEPARTMENT OF TRANSPORTATION
Caltrans
HYDRAULICS

FUNCTIONAL SUPERVISOR: KATHEEN REILLY

CALCULATED-DESIGNED BY: KHAI SHOON LEONG
CHECKED BY: KATHLEEN REILLY

REVISED BY: KSL
DATE REVISED: 4/24/14

LAST REVISION 04-15-14
DATE PLOTTED => 08-SEP-2014
TIME PLOTTED => 11:02

Dist	COUNTY	ROUTE	POST MILES TOTAL PROJECT	SHEET No.	TOTAL SHEETS
04	Nap	29	47.0/47.2	25	146

REGISTERED CIVIL ENGINEER 4/24/14 DATE

6-23-14
PLANS APPROVAL DATE

REGISTERED PROFESSIONAL ENGINEER Khai Shoon Leong No. 76183 Exp. 6-30-14 CIVIL STATE OF CALIFORNIA

THE STATE OF CALIFORNIA OR ITS OFFICERS OR AGENTS SHALL NOT BE RESPONSIBLE FOR THE ACCURACY OR COMPLETENESS OF SCANNED COPIES OF THIS PLAN SHEET.

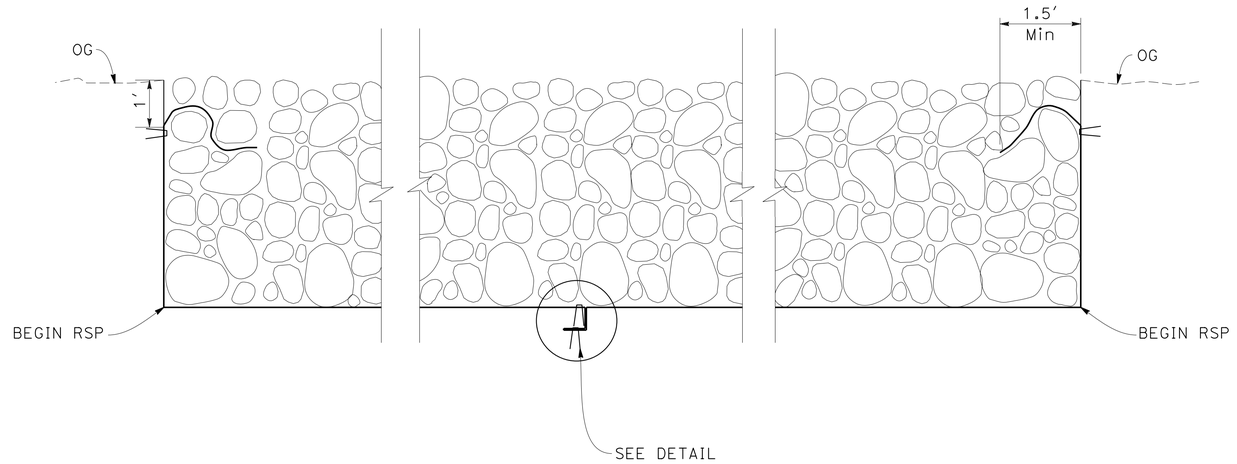

LONGITUDINAL SECTION

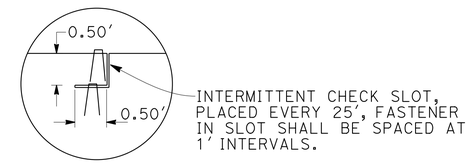

DETAIL

NOTE:

1. SELECTED MATERIAL EXCAVATED FROM THE EXISTING CREEK BED WILL BE PLACED IN FINAL POSITION AS DIRECTED BY THE ENGINEER.

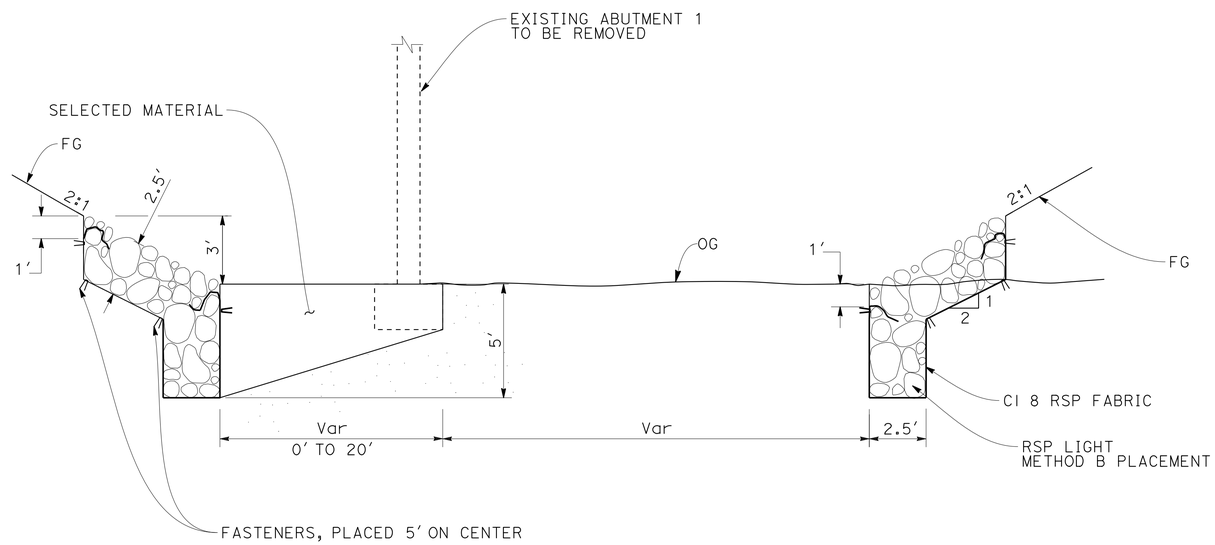

CROSS-SECTION

TOE OF SLOPE RSP

7 a b

DRAINAGE DETAILS

NO SCALE

DD-5

STATE OF CALIFORNIA - DEPARTMENT OF TRANSPORTATION
Caltrans
HYDRAULICS

FUNCTIONAL SUPERVISOR: KATHEEN REILLY
CALCULATED-DESIGNED BY: KHAI SHOON LEONG
CHECKED BY: KATHLEEN REILLY
REVISED BY: KSL
DATE REVISED: 4/24/14

LAST REVISION 04-15-14
DATE PLOTTED => 08-SEP-2014
TIME PLOTTED => 11:02

Dist	COUNTY	ROUTE	POST MILES TOTAL PROJECT	SHEET No.	TOTAL SHEETS
04	Nap	29	47.0/47.2	26	146

REGISTERED CIVIL ENGINEER 4/24/14 DATE

6-23-14
PLANS APPROVAL DATE

REGISTERED PROFESSIONAL ENGINEER
Khai Shoon Leong
No. 76183
Exp. 6-30-14
CIVIL
STATE OF CALIFORNIA

THE STATE OF CALIFORNIA OR ITS OFFICERS OR AGENTS SHALL NOT BE RESPONSIBLE FOR THE ACCURACY OR COMPLETENESS OF SCANNED COPIES OF THIS PLAN SHEET.

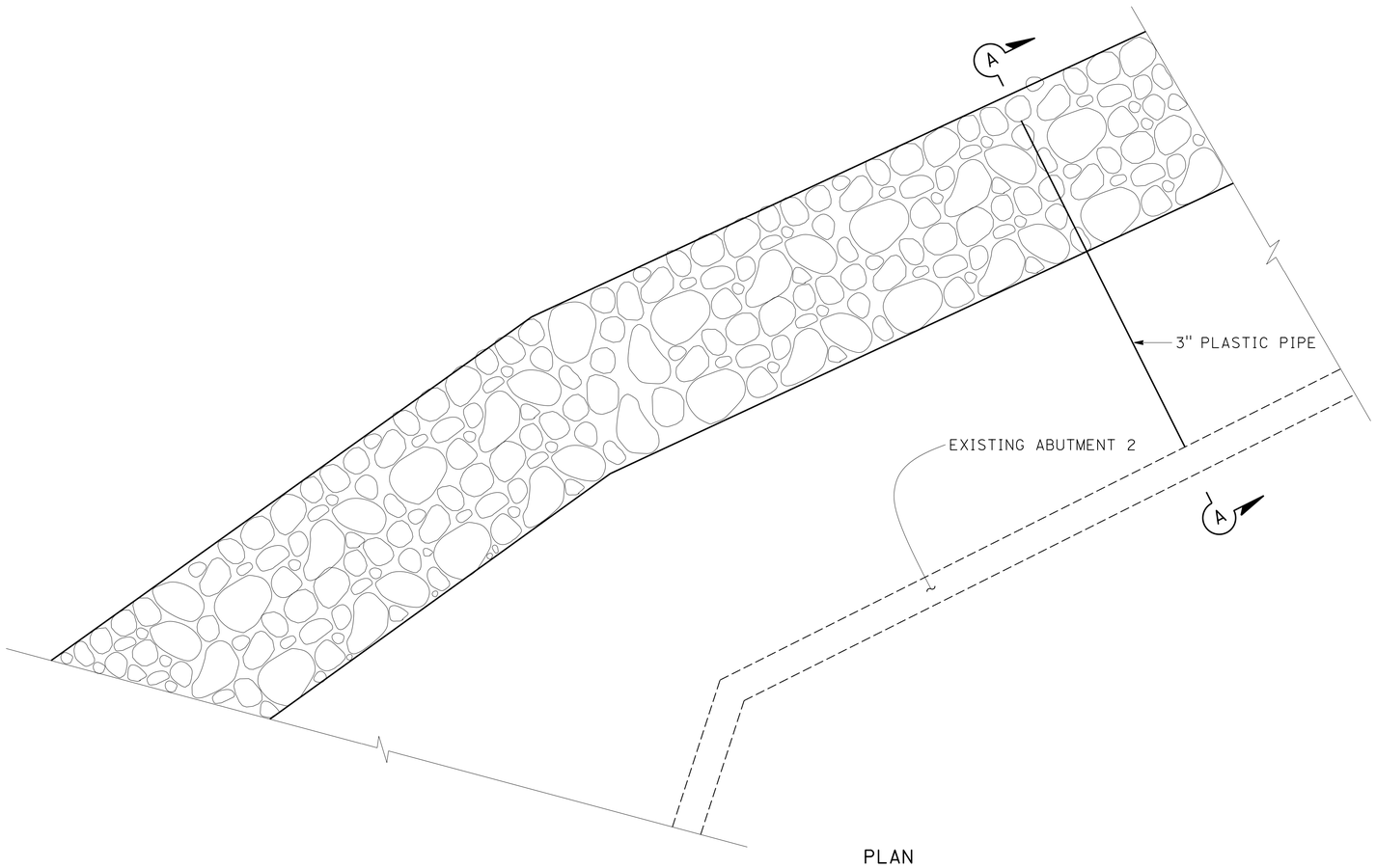

PLAN

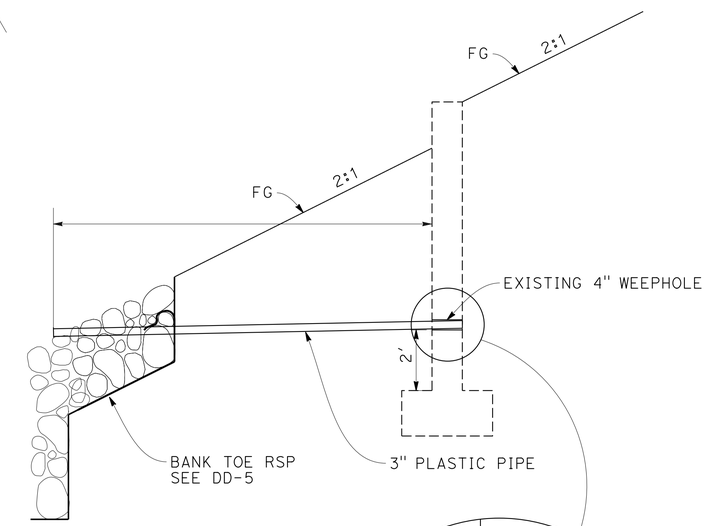

SECTION A-A

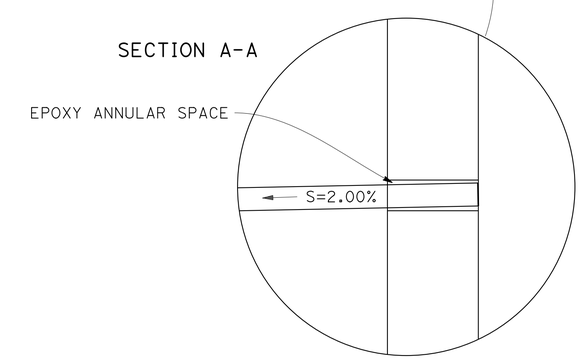

8 a

ABUTMENT 2 WEEPHOLE OUTFALL

DRAINAGE DETAILS

NO SCALE

DD-6

STATE OF CALIFORNIA - DEPARTMENT OF TRANSPORTATION
Caltrans
HYDRAULICS

FUNCTIONAL SUPERVISOR: KATHEEN REILLY

CALCULATED-DESIGNED BY: KHAI SHOON LEONG
CHECKED BY: KATHLEEN REILLY

REVISED BY: KSL
DATE REVISED: 4/24/14

LAST REVISION 04-15-14 | DATE PLOTTED => 08-SEP-2014 | TIME PLOTTED => 11:02

Dist	COUNTY	ROUTE	POST MILES TOTAL PROJECT	SHEET No.	TOTAL SHEETS
04	Nap	29	47.0/47.2	27	146

REGISTERED CIVIL ENGINEER 4/24/14 DATE

6-23-14
PLANS APPROVAL DATE

REGISTERED PROFESSIONAL ENGINEER
Khai Shoon Leong
No. 76183
Exp. 6-30-14
CIVIL
STATE OF CALIFORNIA

THE STATE OF CALIFORNIA OR ITS OFFICERS OR AGENTS SHALL NOT BE RESPONSIBLE FOR THE ACCURACY OR COMPLETENESS OF SCANNED COPIES OF THIS PLAN SHEET.

NOTE:
FOR DETAILS NOT SHOWN, SEE Std PLAN D89

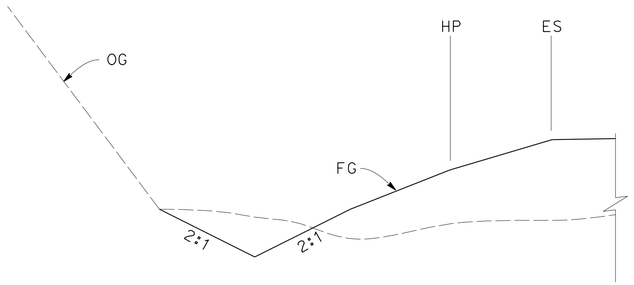

TYPICAL UNLINED V-GUTTER

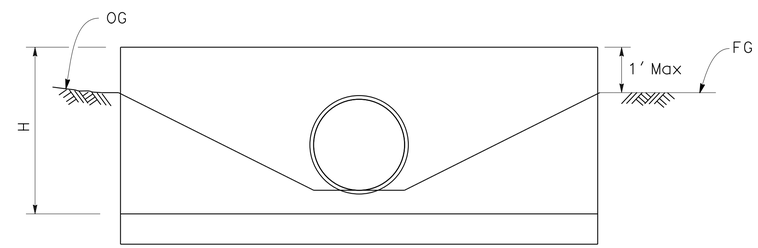

SECTION A-A

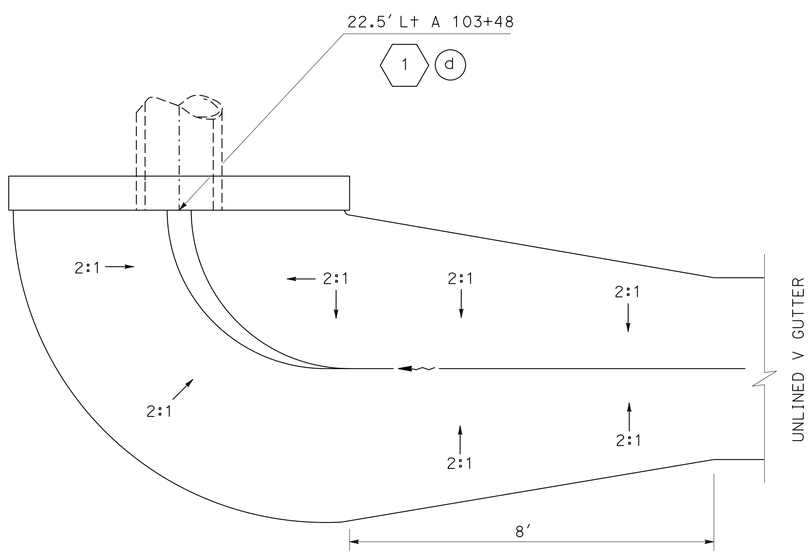

PLAN

HEADWALL DETAIL

1 d

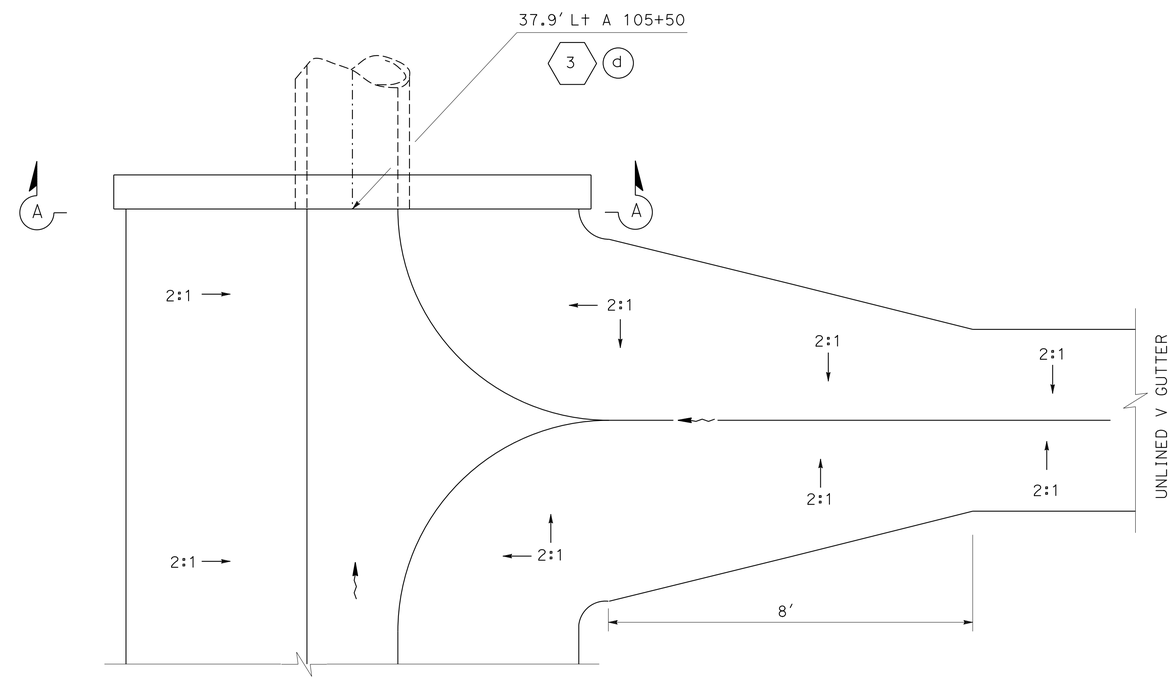

CONFORM TO EXISTING SWALE

PLAN

HEADWALL DETAIL

3 d

DRAINAGE DETAILS

NO SCALE

DD-7

STATE OF CALIFORNIA - DEPARTMENT OF TRANSPORTATION
Caltrans
HYDRAULICS

FUNCTIONAL SUPERVISOR: KATHEEN REILLY

CALCULATED-DESIGNED BY: KHAI SHOON LEONG
CHECKED BY: KATHLEEN REILLY

REVISED BY: KSL
DATE REVISED: 4/24/14

LAST REVISION 04-15-14
DATE PLOTTED => 08-SEP-2014
TIME PLOTTED => 11:02

Dist	COUNTY	ROUTE	POST MILES TOTAL PROJECT	SHEET No.	TOTAL SHEETS
04	Nap	29	47.0/47.2	28	146

REGISTERED CIVIL ENGINEER DATE 4/24/14

6-23-14
PLANS APPROVAL DATE

REGISTERED PROFESSIONAL ENGINEER
Khai Shoon Leong
No. 76183
Exp. 6-30-14
CIVIL
STATE OF CALIFORNIA

THE STATE OF CALIFORNIA OR ITS OFFICERS OR AGENTS SHALL NOT BE RESPONSIBLE FOR THE ACCURACY OR COMPLETENESS OF SCANNED COPIES OF THIS PLAN SHEET.

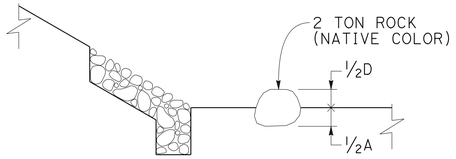

SECTION A-A

PLACEMENT OF 2 TON ROCK (NATIVE COLOR)

DRAINAGE DETAILS

NO SCALE

DD-8

CALCULATED-DESIGNED BY	KHAI SHOON LEONG	REVISED BY	KSL
CHECKED BY	KATHLEEN REILLY	DATE REVISED	4/24/14

FUNCTIONAL SUPERVISOR: KATHEEN REILLY

STATE OF CALIFORNIA - DEPARTMENT OF TRANSPORTATION

Caltrans

HYDRAULICS

LAST REVISION 04-15-14 | DATE PLOTTED => 08-SEP-2014 | TIME PLOTTED => 11:02

Dist	COUNTY	ROUTE	POST MILES TOTAL PROJECT	SHEET No.	TOTAL SHEETS
04	Nap	29	47.0/47.2	29	146

REGISTERED CIVIL ENGINEER DATE 4/24/14

6-23-14
PLANS APPROVAL DATE

REGISTERED PROFESSIONAL ENGINEER Khai Shoon Leong No. 76183 Exp. 6-30-14 CIVIL STATE OF CALIFORNIA

THE STATE OF CALIFORNIA OR ITS OFFICERS OR AGENTS SHALL NOT BE RESPONSIBLE FOR THE ACCURACY OR COMPLETENESS OF SCANNED COPIES OF THIS PLAN SHEET.

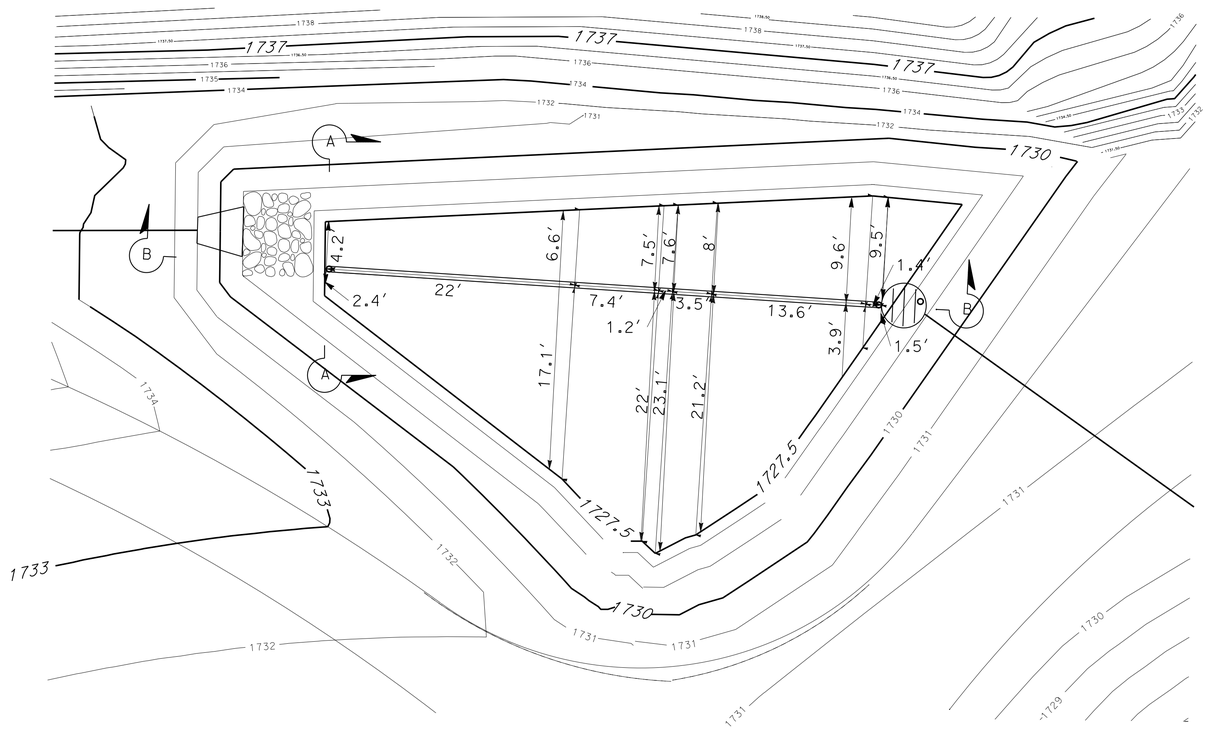

PLAN

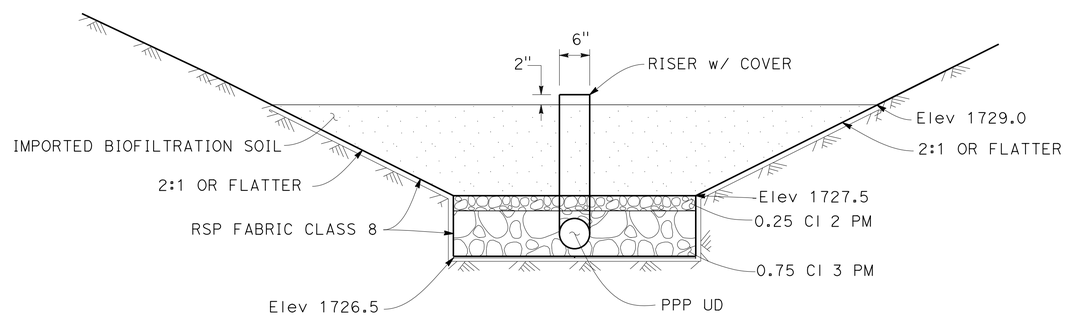

SECTION A-A

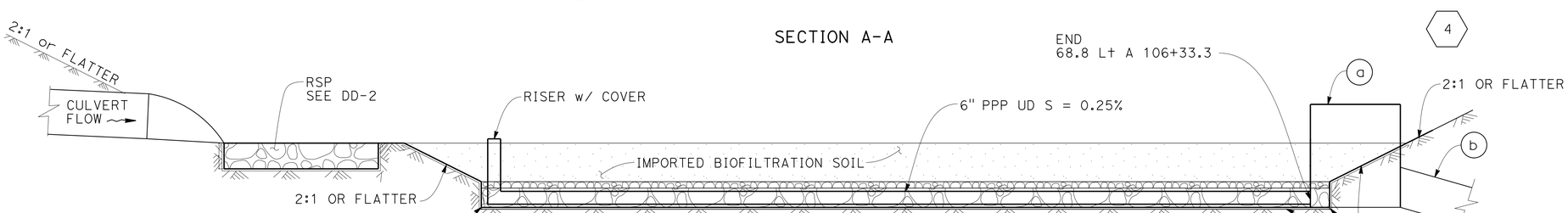

SECTION B-B

BIOSWALE (BIORETENTION)

NOTES

1. SEE Std PLANS D102 FOR RISER COVER DETAILS.
2. SEE SUMMARY OF QUANTITIES SHEET FOR IMPORTED BIOFILTRATION SOIL QUANTITY.

DRAINAGE DETAILS

NO SCALE

DD-9

REVISED BY	KSL
DATE REVISED	4/24/14
CALCULATED-DESIGNED BY	KHAI SHOON LEONG
CHECKED BY	KATHLEEN REILLY
FUNCTIONAL SUPERVISOR	KATHLEEN REILLY

STATE OF CALIFORNIA - DEPARTMENT OF TRANSPORTATION
Caltrans
HYDRAULICS

LAST REVISION 04-15-14
DATE PLOTTED => 08-SEP-2014
TIME PLOTTED => 11:02

Dist	COUNTY	ROUTE	POST MILES TOTAL PROJECT	SHEET No.	TOTAL SHEETS
04	Nap	29	47.0/47.2	30	146

REGISTERED CIVIL ENGINEER DATE 4/24/14

6-23-14
PLANS APPROVAL DATE

REGISTERED PROFESSIONAL ENGINEER Jason R. Phoen No. 57553 Exp. 12-31-15 CIVIL STATE OF CALIFORNIA

THE STATE OF CALIFORNIA OR ITS OFFICERS OR AGENTS SHALL NOT BE RESPONSIBLE FOR THE ACCURACY OR COMPLETENESS OF SCANNED COPIES OF THIS PLAN SHEET.

APC ALLOWABLE MATERIAL AND PROTECTION

CULVERT DESIGNATION	RCP TYPE II MODIFIED CEMENT SIZE	PLASTIC PIPE SIZE	PLASTIC PIPE INTERIOR TYPE
18" APC (A)	18"	18"	SMOOTH OR CORRGATED
18" APC (B)	18"	18"	SMOOTH
24" APC	No	24"	CORRUGATED

DRAINAGE QUANTITIES

DRAINAGE SHEET No.	DRAINAGE SYSTEM No. ⬡	DRAINAGE UNIT ○	REMOVE CULVERT (LF)	REMOVE HEADWALL (EA)	MINOR CONCRETE (MINOR STRUCTURE) (CY)	HEIGHT OF INLET (N) (LF)	RSP (2 TON, METHOD A, NATIVE COLOR)	RSP LIGHT, METHOD B (CY)	RSP FACING (CY)	ROCK SLOPE PROTECTION BACK No. 2 METHOD B (CY)	RSP FABRIC CLASS 8 (SQYD)	Misc IRON & STEEL (LB)	PLASTIC PIPE 3" (LF)	CORRUGATED METAL PIPE (GMP DI) 36" (LF)	CORRUGATED METAL PIPE 12" (LF)	ALTERNATIVE PIPE CULVERT (A) 18" (LF)	ALTERNATIVE PIPE CULVERT (B) 18" (LF)	ALTERNATIVE PIPE CULVERT 24" (LF)	WELDED STEEL PIPE 12" (LF)	WELDED STEEL PIPE 18" (LF)	ALTERNATIVE FLARED END SECTION 18" (EA)	ALTERNATIVE FLARED END SECTION 24" (EA)	Max COVER (N) (LF)	FRAME GATE & COVER (N) 24-12X (EA)	FRAME GATE & COVER (N) MH U45 (EA)	FRAME GATE & COVER (N) 36R (EA)	PIPE JOINT CLASSIFICATION (N)	DESCRIPTION	STATION	DRAINAGE SHEET No.	DRAINAGE SYSTEM No. ⬡	DRAINAGE UNIT ○
D-1	1	a		1																								REMOVE HEADWALL	23.9′ L+ A 103+23.7	D-1	1	a
		b	40																									REMOVE 18" CMP	23.9′ L+ A 103+23.7 TO 21.9′ R+ 103+39.73			b
		c		1																		2.0						REMOVE HEADWALL	21.9′ R+ A 103+39.73			c
		d			0.91																							HEADWALL	22.5′ L+ A 103+48			d
		e														42.5						2.8					S	18" APC (A)	22.5′ L+ A 103+48 TO 19.98′ R+ 103+48			e
		f			3.92	9.3						239											1					G2 DI	19.98′ R+ A 103+48			f
		g																		2.5								18" WSP	19.98′ R+ A 103+48 TO 22.5′ R+ 103+49			g
		h								2.1	12																	RSP	22.5′ R+ A 103+49			h
	2	a			1.06	3.5						239											1					G1 DI	18.26′ L+ 103+00		2	a
		b														34						2.0					S	18" APC (A)	18.26′ L+ 103+00 TO 18.26′ L+ 103+34			b
		c			1.89	5.3						239											1					G2 DI	18.26′ L+ 103+34			c
		d														166						3.8					S	18" APC (A)	18.26′ L+ A 103+34 TO 20.15′ L+ 105+00			d
		e			2.26	6.7						435												1				G2 MH	20.15′ L+ A 105+00			e
		f			1.06	3.5						239											1					G2 DI	23.48′ R+ A 105+00			f
		g														43.6						5.2						18" APC (A)	23.48′ R+ A 105+00 TO 20.15′ L+ 105+00			g
		h														98.2						5.2						18" APC (A)	20.15′ L+ A 105+00 TO 42.96′ L+ 105+95.5			h
		i																			1							AFES	42.96′ L+ A 105+95.5			i
		j								2.3	12																	RSP	42.96′ L+ A 105+95.5			j
	3	a		1																								REMOVE HEADWALL	18.1 L+ A 105+56.2		3	a
		b	6																									REMOVE 24" CMP (PORTION)	18.1 L+ A 105+56 TO 6.5′ L+ 105+54.3			b
		c		1																								REMOVE HEADWALL	37.9′ L+ A 105+50.6			c
		d			1.20																							HEADWALL	37.9′ L+ A 105+50.6			d
		e																7.4				6.4					S	24" APC	37.9′ L+ A 105+50.6 TO 32′ L+ 105+50.8			e
		f			3.61	8.4						435												1				G2 MH	32′ L+ A 105+50.8			f
		g																55.9				7.4					S	24" APC	32′ L+ A 105+50.8 TO 20.69′ R+ 105+31.5			g
		h			6.11	15.4						435												1				G2 MH	20.69′ R+ A 105+31.5			h
		i																58.6				13.4					S	24" APC	20.69′ R+ A 105+31.5 TO 79.25′ R+ 105+28.6			i
		j																			1							AFES	79.25′ R+ 105+28.6			j
		k					30		8.9		25																	RSP	(CONFORM TO EXISTING SWALE)			k
	4	a			2.00	4.0						239		4.5												1		GMP	72.9′ L+ A 106+37.6		4	a
		b													78.8							3.0					DD	12" CMP w/ DD JOINT	72.9′ L+ A 106+37.6 TO 91.6′ L+ 106+91.3			b
		c								2.3	10																	RSP	91.6′ L+ A 106+91.3			c
	5	a			1.08	3.6						239											1					G1 DI	23.5′ R+ A 106+73.5		5	a
		b																	9			4.0						12" WSP RISER	23.6′ R+ A 106+73.5 TO 24.5′ R+ 106+73.5			b
		c								2.1	12																	RSP	24.5′ R+ A 106+73.5			c
SHEET TOTAL			46	4	25		30		8.9	8.8	70	2739		4.5	78.8	384.3		122	9	3	1	1		5	3	1		SHEET TOTAL				

(N) - NOT A SEPARATE PAY ITEM, FOR INFORMATION ONLY.

CLEMENT YEN	CY	REVISED BY	
STEWART LEE	4/24/14	DATE REVISED	
CALCULATED-DESIGNED BY			
CHECKED BY			
FUNCTIONAL SUPERVISOR	STEWART LEE		

STATE OF CALIFORNIA - DEPARTMENT OF TRANSPORTATION

Caltrans® DESIGN

DRAINAGE QUANTITIES DQ-1

LAST REVISION 04-15-14 | DATE PLOTTED => 08-SEP-2014 | TIME PLOTTED => 11:02

Dist	COUNTY	ROUTE	POST MILES TOTAL PROJECT	SHEET No.	TOTAL SHEETS
04	Nap	29	47.0/47.2	31	146

REGISTERED CIVIL ENGINEER 4/24/14 DATE

6-23-14
PLANS APPROVAL DATE

REGISTERED PROFESSIONAL ENGINEER Jason R. Phoen No. 57553 Exp. 12-31-15 CIVIL STATE OF CALIFORNIA

THE STATE OF CALIFORNIA OR ITS OFFICERS OR AGENTS SHALL NOT BE RESPONSIBLE FOR THE ACCURACY OR COMPLETENESS OF SCANNED COPIES OF THIS PLAN SHEET.

APC ALLOWABLE MATERIAL AND PROTECTION

CULVERT DESIGNATION	RCP TYPE II MODIFIED CEMENT SIZE	PLASTIC PIPE SIZE	PLASTIC PIPE INTERIOR TYPE
18" APC (A)	18"	18"	SMOOTH OR CORRGATED
18" APC (B)	18"	18"	SMOOTH
24" APC	No	24"	CORRUGATED

DRAINAGE QUANTITIES

DRAINAGE SHEET No.	DRAINAGE SYSTEM No. ⬡	DRAINAGE UNIT ○	REMOVE CULVERT (LF)	REMOVE HEADWALL (EA)	MINOR CONCRETE (MINOR STRUCTURE) (CY)	HEIGHT OF INLET (N) (LF)	RSP (2 TON, METHOD A, NATIVE COLOR) (CY)	RSP LIGHT, METHOD B (CY)	RSP FACING (CY)	ROCK SLOPE PROTECTION BACK No. 2 METHOD B (CY)	RSP FABRIC CLASS 8 (SQYD)	Misc IRON & STEEL (LB)	PLASTIC PIPE 3" (LF)	CORRUGATED METAL PIPE (GMP DI) 36" (LF)	CORRUGATED METAL PIPE 12" (LF)	ALTERNATIVE PIPE CULVERT (A) 18" (LF)	ALTERNATIVE PIPE CULVERT (B) 18" (LF)	ALTERNATIVE PIPE CULVERT 24" (LF)	WELDED STEEL PIPE 12" (LF)	WELDED STEEL PIPE 18" (LF)	ALTERNATIVE FLARED END SECTION 18" (EA)	ALTERNATIVE FLARED END SECTION 24" (EA)	Min COVER (N) (LF)	FRAME GATE & COVER (N) 24-12X (EA)	FRAME GATE & COVER (N) MH U45 (EA)	FRAME GATE & COVER (N) 36R (EA)	PIPE JOINT CLASSIFICATION (N)	DESCRIPTION	STATION	DRAINAGE SHEET No.	DRAINAGE SYSTEM No. ⬡	DRAINAGE UNIT ○
D-2	6	a		1																								REMOVE HEADWALL	23.9′ L+ A 103+23.7	D-2	6	a
		b	55																									REMOVE 18" CMP	23.9′ L+ A 103+23.7 TO 21.9′ R+ 103+39.73			b
		c		1																								REMOVE HEADWALL	21.9′ R+ A 103+39.73			c
		d			1.06	3.5						239												1				G1 DI	23.89′ R+ A 108+50			d
		e															112.8						2				S	18" APC (B)	23.89′ R+ A 108+50 TO 20.58′ R+ 109+72.8			e
		f			1.19	4.1						239												1				G1 DI	20.58 R+ A 109+72.8			f
		g			0.91																							HEADWALL	23.55′ L+ A 109+74.5			g
		h															44.2						1				S	18" APC (B)	23.58′ L+ A 109+74.5 TO 20.58′ R+ 109+72.8			h
		i															11.2						3				S	18" APC (B)	20.58′ R+ A 109+72.8 TO 31.8′ R+ 109+72.73			i
		j																			1							AFES	31.8′ R+ 109+72.73			j
		k								2.3	10																	RSP	(CONFORM TO EXISTING SWALE)			k
	7	a						173.4			316																	RSP	122′ L+ A 106+90 TO 25.4′ R+ 107+00		7	a
		b						162.6			335															1		RSP	116′ L+ A 107+10 TO 25.2′ R+ 107+15			b
	8	a											12.5′															3" PLASTIC PIPE	60.0′ L+ 107+08 TO 59.1′ R+ 107+05		8	a
	9	a											46′															2-3" PLASTIC PIPE	(CONNECT TO ABUTMENT DRAIN) 37.2′ R+ 107+06		9	a
		b											34′															2-3" PLASTIC PIPE	(CONNECT TO ABUTMENT DRAIN) 37.19′ R+ 107.42.5			b
SHEET TOTAL			55	2	3			336		2.3	661	478	92.5′				178				1			2								
SHEET TOTAL DQ-1			46	4	25		30		8.9	8.8	70	2739		4.5	79	384		122	9	3	1	1		5		3						
GRAND TOTAL			101	6	28		30	336	8.9	11.1	731	3217	92.5	4.5	79	384	178	122	9	3	2	1		7		3		GRAND TOTAL				

(N) - NOT A SEPARATE PAY ITEM, FOR INFORMATION ONLY.

CLEMENT YEN — REVISED BY — CY
STEWART LEE — DATE REVISED — 4/24/14
CALCULATED-DESIGNED BY
CHECKED BY
FUNCTIONAL SUPERVISOR — STEWART LEE

STATE OF CALIFORNIA - DEPARTMENT OF TRANSPORTATION
Caltrans
DESIGN

DRAINAGE QUANTITIES DQ-2

LAST REVISION 04-15-14 | DATE PLOTTED => 08-SEP-2014 | TIME PLOTTED => 11:02

Dist	COUNTY	ROUTE	POST MILES TOTAL PROJECT	SHEET No.	TOTAL SHEETS
04	Nap	29	47.0/47.2	32	146

REGISTERED CIVIL ENGINEER 4/28/14 DATE

6-23-14
PLANS APPROVAL DATE

REGISTERED PROFESSIONAL ENGINEER Jerilyn L. Struven No. 49964 Exp. 12-31-14 CIVIL STATE OF CALIFORNIA

THE STATE OF CALIFORNIA OR ITS OFFICERS OR AGENTS SHALL NOT BE RESPONSIBLE FOR THE ACCURACY OR COMPLETENESS OF SCANNED COPIES OF THIS PLAN SHEET.

NOTES:

1. EXACT LOCATION AND POSITION OF CONSTRUCTION AREA SIGNS TO BE DETERMINED BY THE ENGINEER.
2. SIGN LOCATIONS SHOWN ARE APPROXIMATE ONLY.

LEGEND:

No. CONSTRUCTION AREA SIGN NUMBER

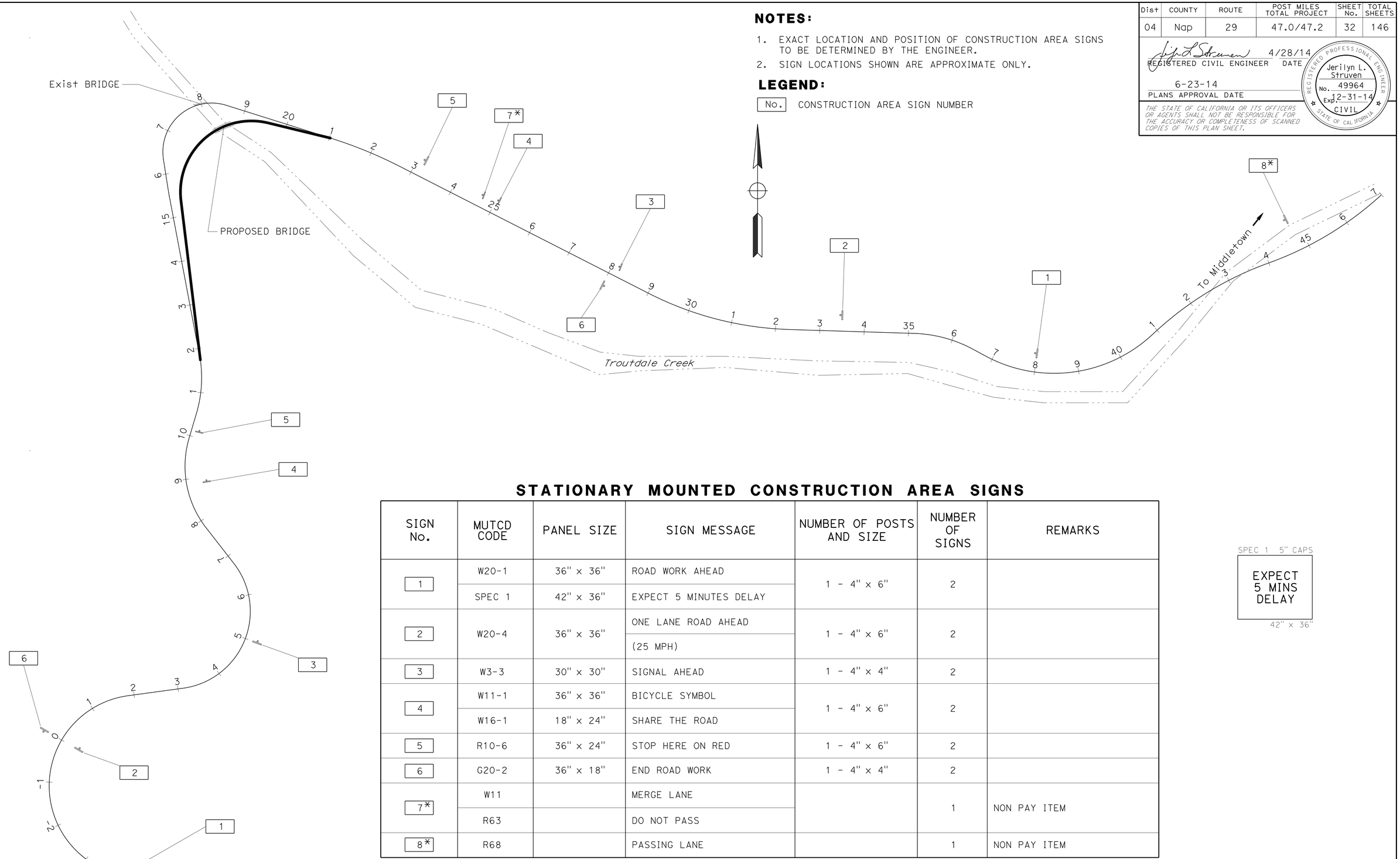

STATIONARY MOUNTED CONSTRUCTION AREA SIGNS

SIGN No.	MUTCD CODE	PANEL SIZE	SIGN MESSAGE	NUMBER OF POSTS AND SIZE	NUMBER OF SIGNS	REMARKS
1	W20-1	36" x 36"	ROAD WORK AHEAD	1 - 4" x 6"	2	
	SPEC 1	42" x 36"	EXPECT 5 MINUTES DELAY			
2	W20-4	36" x 36"	ONE LANE ROAD AHEAD	1 - 4" x 6"	2	
			(25 MPH)			
3	W3-3	30" x 30"	SIGNAL AHEAD	1 - 4" x 4"	2	
4	W11-1	36" x 36"	BICYCLE SYMBOL	1 - 4" x 6"	2	
	W16-1	18" x 24"	SHARE THE ROAD			
5	R10-6	36" x 24"	STOP HERE ON RED	1 - 4" x 6"	2	
6	G20-2	36" x 18"	END ROAD WORK	1 - 4" x 4"	2	
7*	W11		MERGE LANE		1	NON PAY ITEM
	R63		DO NOT PASS			
8*	R68		PASSING LANE		1	NON PAY ITEM

*EXISTING ROADSIDE SIGN TO BE COVER & UNCOVER DURING CONSTRUCTION, AS DIRECTED BY ENGINEER.

SPEC 1 5" CAPS

EXPECT
5 MINS
DELAY

42" x 36"

CONSTRUCTION AREA SIGNS

NO SCALE

APPROVED FOR CONSTRUCTION AREA SIGN WORK ONLY

CS-1

STATE OF CALIFORNIA - DEPARTMENT OF TRANSPORTATION
Caltrans
TRAFFIC

FUNCTIONAL SUPERVISOR: ROLAND AU-YEUNG
CALCULATED-DESIGNED BY: STEPHEN LAU
CHECKED BY: JERILYN STRUVEN
REVISED BY: SL
DATE REVISED: 4/24/14

LAST REVISION 03-11-14 | DATE PLOTTED => 08-SEP-2014 | TIME PLOTTED => 11:02

Dist	COUNTY	ROUTE	POST MILES TOTAL PROJECT	SHEET No.	TOTAL SHEETS
04	Nap	29	47.0/47.2	33	146

REGISTERED CIVIL ENGINEER DATE 4/24/14

6-23-14
PLANS APPROVAL DATE

REGISTERED PROFESSIONAL ENGINEER Jason R. Phoen No. 57553 Exp. 12-31-15 CIVIL STATE OF CALIFORNIA

THE STATE OF CALIFORNIA OR ITS OFFICERS OR AGENTS SHALL NOT BE RESPONSIBLE FOR THE ACCURACY OR COMPLETENESS OF SCANNED COPIES OF THIS PLAN SHEET.

NOTE:

FOR ACCURATE RIGHT OF WAY DATA, CONTACT RIGHT OF WAY ENGINEERING AT THE DISTRICT OFFICE.

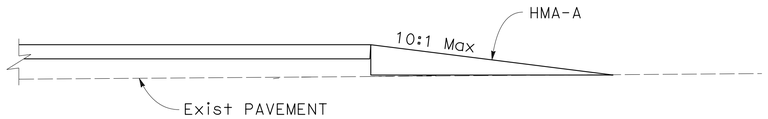

LONGITUDINAL SECTION
B 15+30 TO 15+40

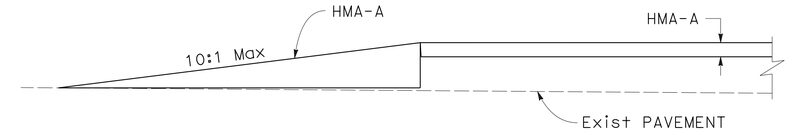

LONGITUDINAL SECTION
B 18+17 TO 19+00

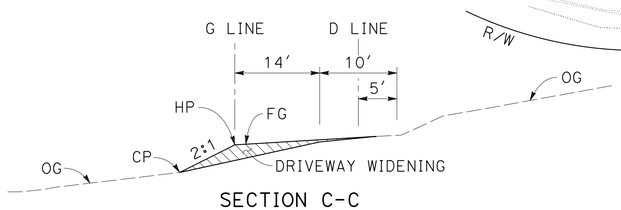

SECTION C-C
DRIVEWAY
NO SCALE

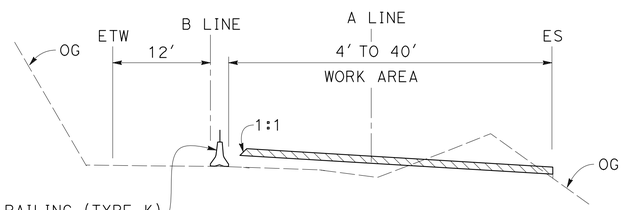

SECTION B-B
NO SCALE

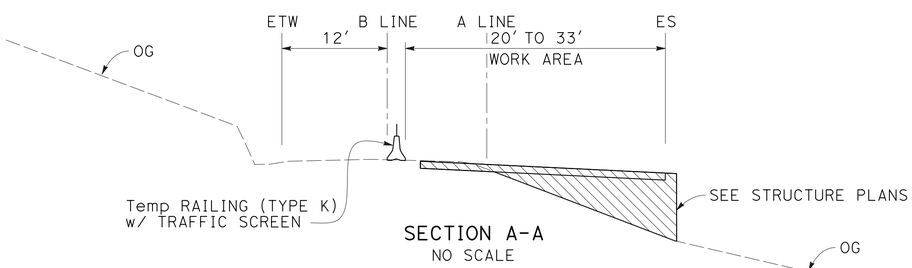

SECTION A-A
NO SCALE

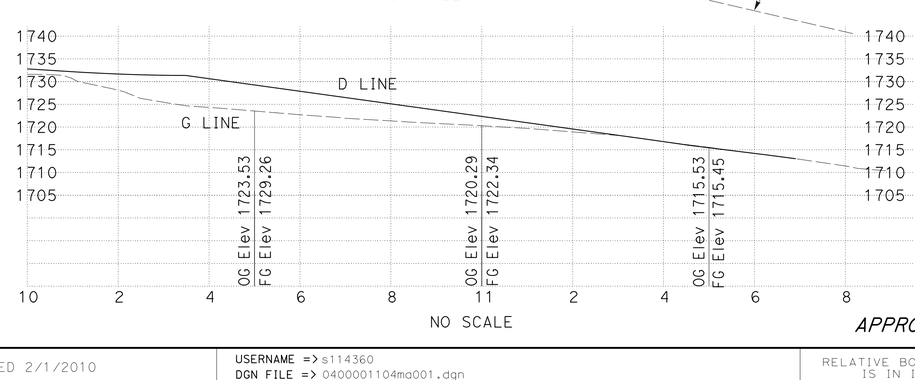

NO SCALE

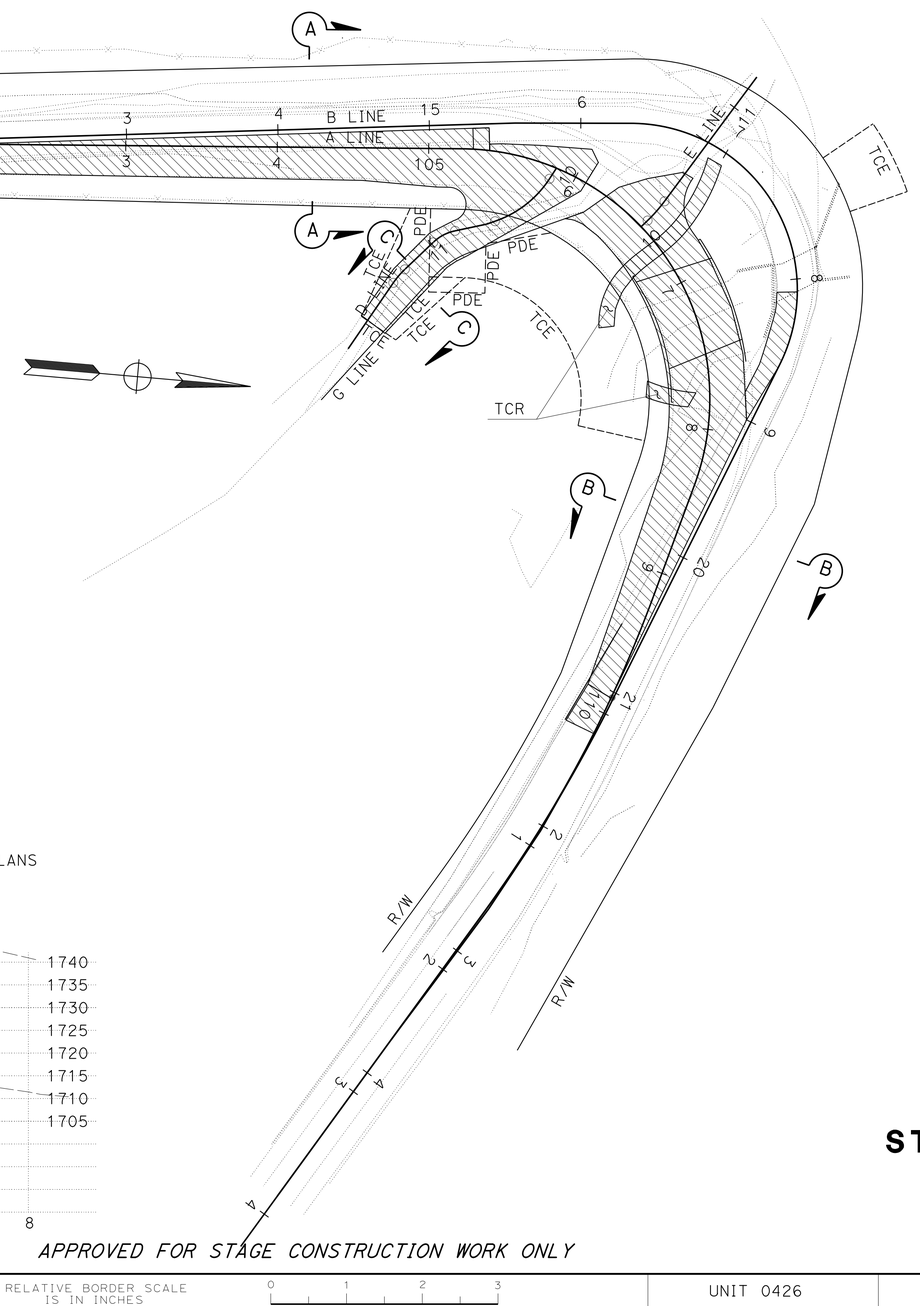

ABBREVIATIONS:

TCC TEMPORARY CRASH CUSHION
TCR TEMPORARY CONSTRUCTION ROADWAY

LEGEND:

- REMOVE EXISTING BRIDGE
- CONSTRUCTION THIS STAGE
- REMOVE BASE AND SURFACE
- CHANNELIZER (SURFACE MOUNTED)
- ALTERNATIVE TEMPORARY CRASH CUSHION SYSTEM (ATCCS)
- TEMPORARY CRASH CUSHION

NOTE:

FINAL HMA-A LIFT TO BE PLACED JUST PRIOR TO FINAL PAVEMENT DELINEATION FOR THE ENTIRE PROJECT.

STAGE CONSTRUCTION PLAN
STAGE 1
SCALE: 1" = 50′

APPROVED FOR STAGE CONSTRUCTION WORK ONLY

SC-1

REVISED BY	DATE REVISED
JRP	4/24/14

JASON R PHOEN — STEWART LEE — CALCULATED-DESIGNED BY — CHECKED BY
FUNCTIONAL SUPERVISOR: STEWART LEE

STATE OF CALIFORNIA - DEPARTMENT OF TRANSPORTATION
Caltrans® **DESIGN**

LAST REVISION 06-24-14 | DATE PLOTTED => 08-SEP-2014 | TIME PLOTTED => 11:02

Dist	COUNTY	ROUTE	POST MILES TOTAL PROJECT	SHEET No.	TOTAL SHEETS
04	Nap	29	47.0/47.2	34	146

REGISTERED CIVIL ENGINEER 4/24/14 DATE

6-23-14
PLANS APPROVAL DATE

REGISTERED PROFESSIONAL ENGINEER Jason R. Phoen No. 57553 Exp. 12-31-15 CIVIL STATE OF CALIFORNIA

THE STATE OF CALIFORNIA OR ITS OFFICERS OR AGENTS SHALL NOT BE RESPONSIBLE FOR THE ACCURACY OR COMPLETENESS OF SCANNED COPIES OF THIS PLAN SHEET.

NOTE:

FOR ACCURATE RIGHT OF WAY DATA, CONTACT RIGHT OF WAY ENGINEERING AT THE DISTRICT OFFICE.

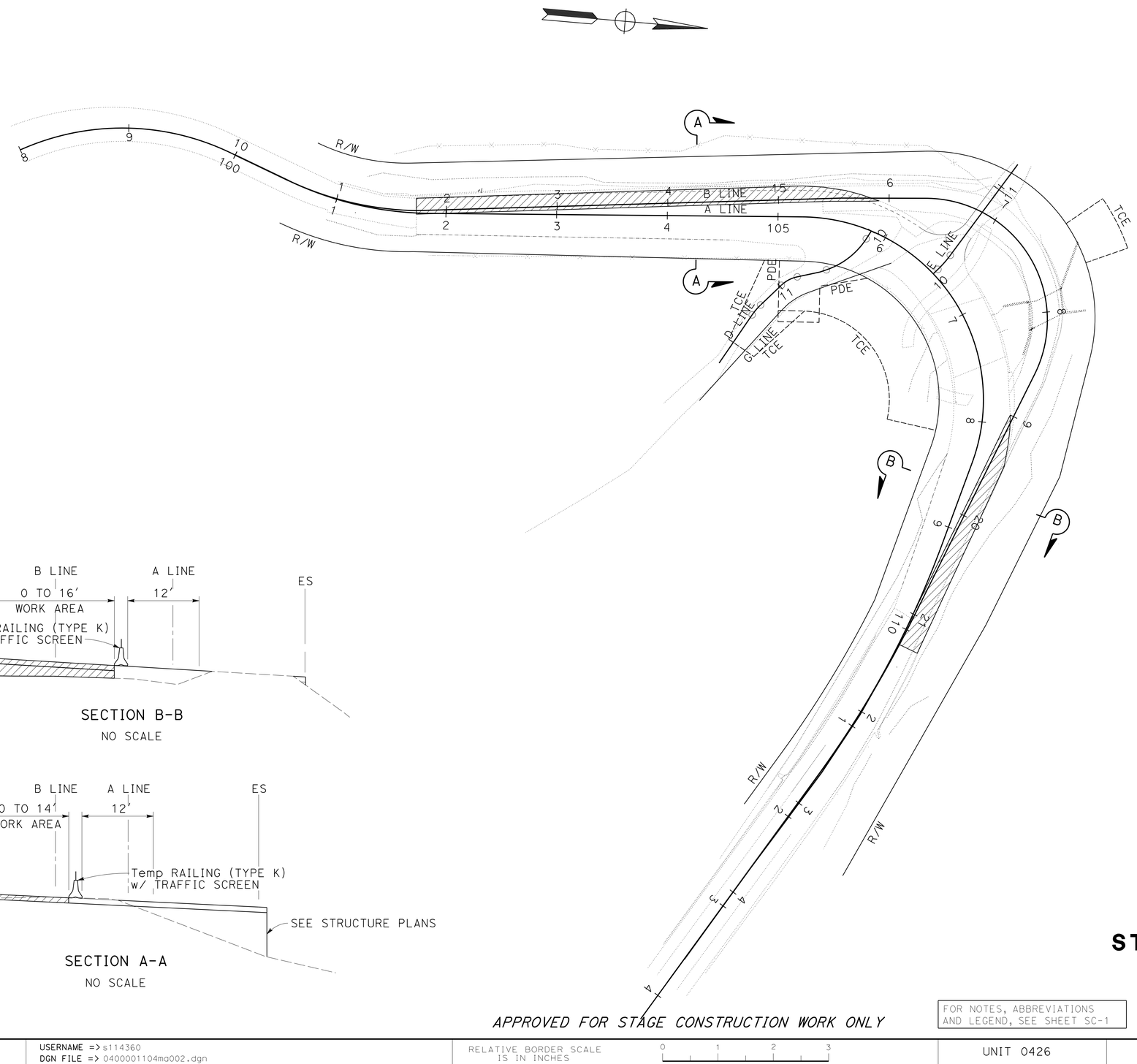

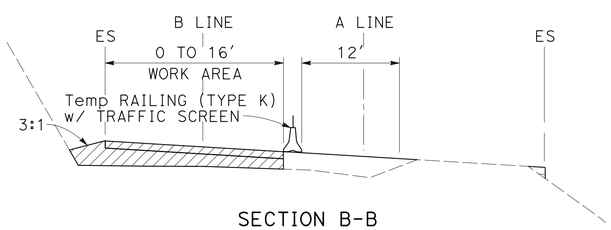

SECTION B-B

NO SCALE

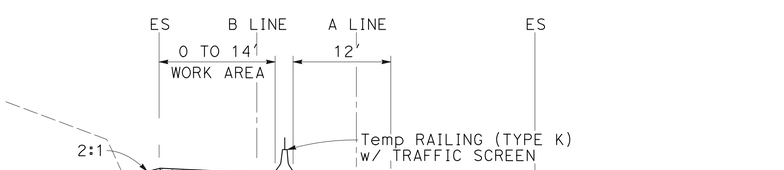

SECTION A-A

NO SCALE

APPROVED FOR STAGE CONSTRUCTION WORK ONLY

FOR NOTES, ABBREVIATIONS AND LEGEND, SEE SHEET SC-1

STAGE CONSTRUCTION PLAN

STAGE 2

SCALE: 1" = 50'

SC-2

REVISED BY	JRP
DATE REVISED	4/24/14
CALCULATED-DESIGNED BY	JASON R PHOEN
CHECKED BY	STEWART LEE
FUNCTIONAL SUPERVISOR	STEWART LEE

STATE OF CALIFORNIA - DEPARTMENT OF TRANSPORTATION

Caltrans

DESIGN

LAST REVISION 05-14-14 | DATE PLOTTED => 08-SEP-2014 | TIME PLOTTED => 11:02

Dist	COUNTY	ROUTE	POST MILES TOTAL PROJECT	SHEET No.	TOTAL SHEETS
04	Nap	29	47.0/47.2	35	146

REGISTERED CIVIL ENGINEER 4/24/14 DATE

6-23-14
PLANS APPROVAL DATE

REGISTERED PROFESSIONAL ENGINEER Jason R. Phoen No. 57553 Exp. 12-31-15 CIVIL STATE OF CALIFORNIA

THE STATE OF CALIFORNIA OR ITS OFFICERS OR AGENTS SHALL NOT BE RESPONSIBLE FOR THE ACCURACY OR COMPLETENESS OF SCANNED COPIES OF THIS PLAN SHEET.

NOTE:

FOR ACCURATE RIGHT OF WAY DATA, CONTACT RIGHT OF WAY ENGINEERING AT THE DISTRICT OFFICE.

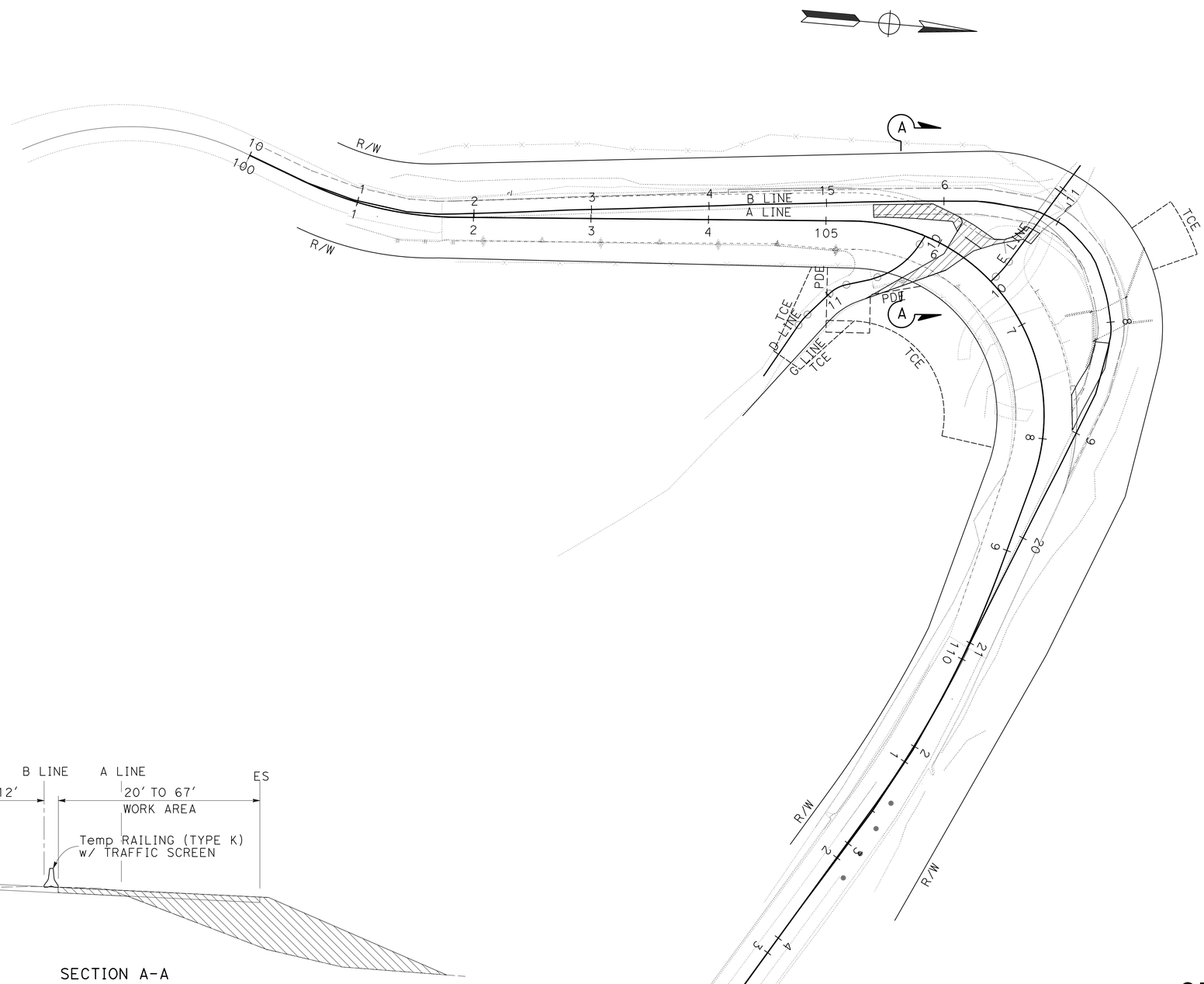

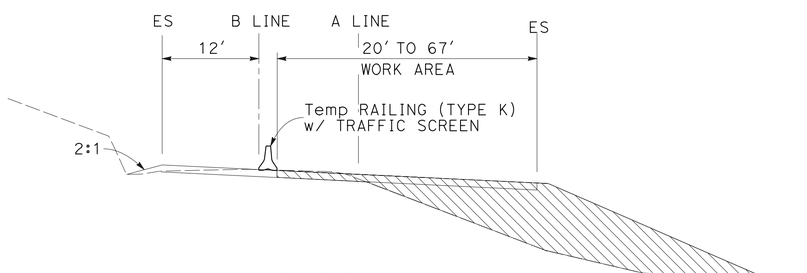

SECTION A-A

NO SCALE

APPROVED FOR STAGE CONSTRUCTION WORK ONLY

FOR NOTES, ABBREVIATIONS AND LEGEND, SEE SHEET SC-1

STAGE CONSTRUCTION PLAN

STAGE 3

SCALE: 1" = 50'

SC-3

STATE OF CALIFORNIA - DEPARTMENT OF TRANSPORTATION

Caltrans

DESIGN

FUNCTIONAL SUPERVISOR: STEWART LEE

CALCULATED-DESIGNED BY: JASON R PHOEN

CHECKED BY: STEWART LEE

REVISED BY: JRP

DATE REVISED: 4/24/14

LAST REVISION 05-14-14 | DATE PLOTTED => 08-SEP-2014 | TIME PLOTTED => 11:02

Dist	COUNTY	ROUTE	POST MILES TOTAL PROJECT	SHEET No.	TOTAL SHEETS
04	Nap	29	47.0/47.2	36	146

REGISTERED CIVIL ENGINEER 4/24/14 DATE

6-23-14
PLANS APPROVAL DATE

REGISTERED PROFESSIONAL ENGINEER Jason R. Phoen No. 57553 Exp. 12-31-15 CIVIL STATE OF CALIFORNIA

THE STATE OF CALIFORNIA OR ITS OFFICERS OR AGENTS SHALL NOT BE RESPONSIBLE FOR THE ACCURACY OR COMPLETENESS OF SCANNED COPIES OF THIS PLAN SHEET.

NOTE:

FOR ACCURATE RIGHT OF WAY DATA, CONTACT RIGHT OF WAY ENGINEERING AT THE DISTRICT OFFICE.

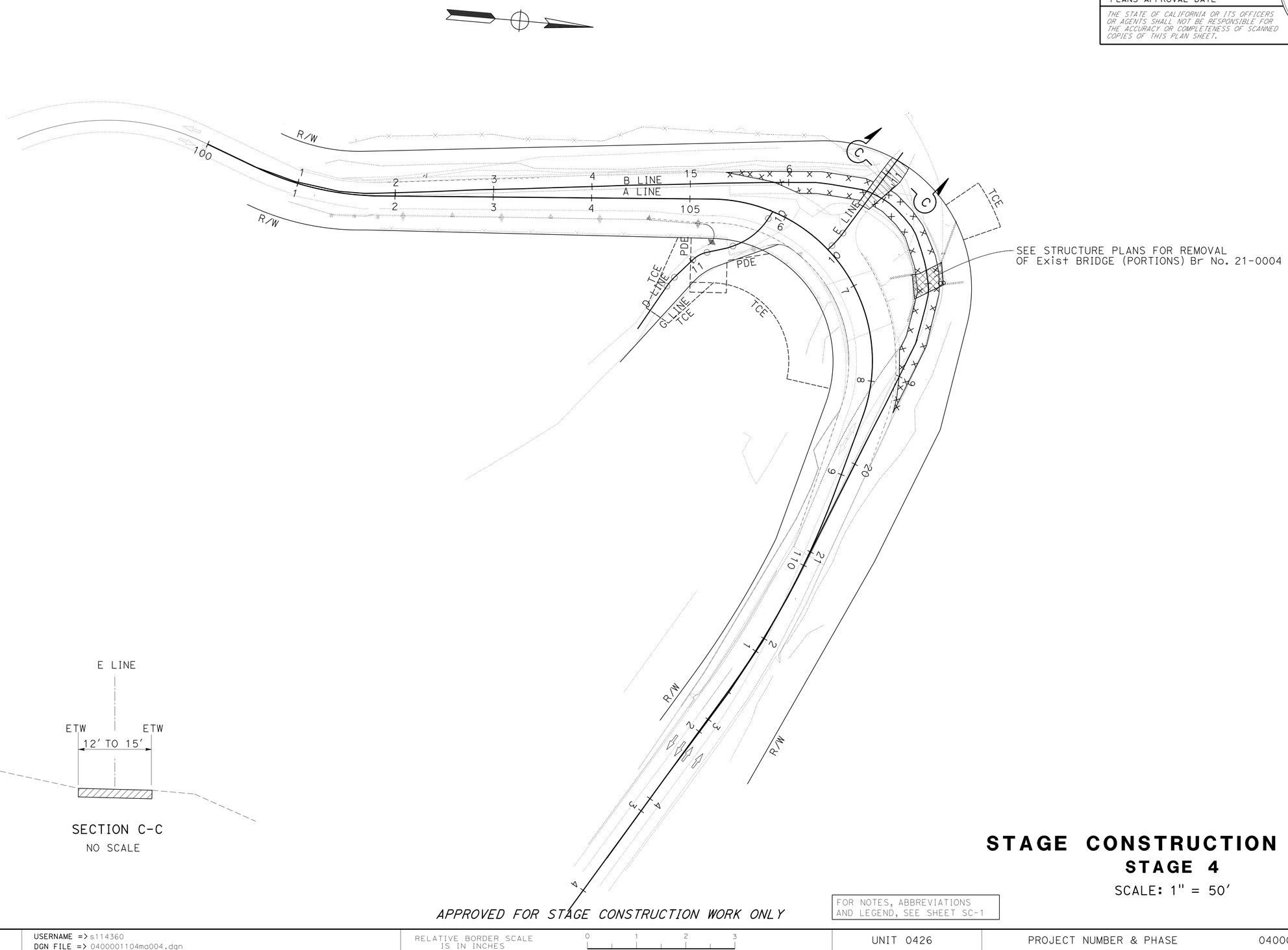

SECTION C-C
NO SCALE

APPROVED FOR STAGE CONSTRUCTION WORK ONLY

FOR NOTES, ABBREVIATIONS AND LEGEND, SEE SHEET SC-1

STAGE CONSTRUCTION PLAN
STAGE 4
SCALE: 1" = 50'

SC-4

STATE OF CALIFORNIA - DEPARTMENT OF TRANSPORTATION
Caltrans
DESIGN

FUNCTIONAL SUPERVISOR: STEWART LEE
CALCULATED-DESIGNED BY: JASON R PHOEN
CHECKED BY: STEWART LEE
REVISED BY: JRP
DATE REVISED: 4/24/14

LAST REVISION 05-15-14
DATE PLOTTED => 08-SEP-2014
TIME PLOTTED => 11:02

Dist	COUNTY	ROUTE	POST MILES TOTAL PROJECT	SHEET No.	TOTAL SHEETS
04	Nap	29	47.0/47.2	37	146

REGISTERED CIVIL ENGINEER 4/24/14 DATE

6-23-14
PLANS APPROVAL DATE

REGISTERED PROFESSIONAL ENGINEER Jason R. Phoen No. 57553 Exp. 12-31-15 CIVIL STATE OF CALIFORNIA

THE STATE OF CALIFORNIA OR ITS OFFICERS OR AGENTS SHALL NOT BE RESPONSIBLE FOR THE ACCURACY OR COMPLETENESS OF SCANNED COPIES OF THIS PLAN SHEET.

NOTE:

FOR ACCURATE RIGHT OF WAY DATA, CONTACT RIGHT OF WAY ENGINEERING AT THE DISTRICT OFFICE.

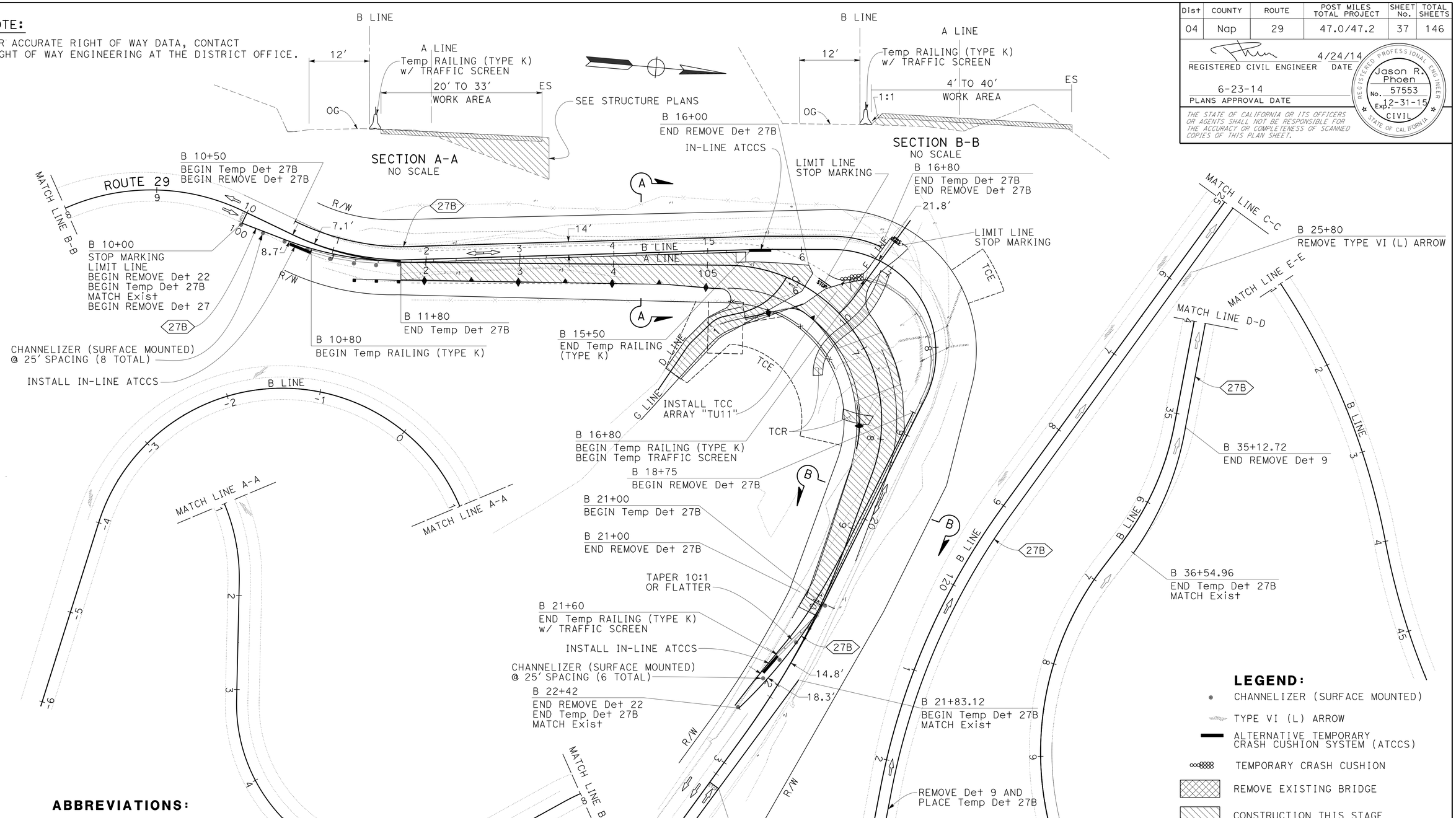

ABBREVIATIONS:

TCC TEMPORARY CRASH CUSHION
TCR TEMPORARY CONSTRUCTION ROADWAY

NOTE:

1. UNLESS NOTED, STATIONING ARE BASED ON B LINE.

TRAFFIC HANDLING PLAN
STAGE 1
SCALE: 1" = 50'

APPROVED FOR TRAFFIC HANDLING WORK ONLY

TH-1

STATE OF CALIFORNIA - DEPARTMENT OF TRANSPORTATION
Caltrans

FUNCTIONAL SUPERVISOR: STEWART LEE
CALCULATED-DESIGNED BY: JASON R PHOEN
CHECKED BY: STEWART LEE
REVISED BY: JRP
DATE REVISED: 4/24/14

LAST REVISION 04-15-14 | DATE PLOTTED => 08-SEP-2014 | TIME PLOTTED => 11:02

Dist	COUNTY	ROUTE	POST MILES TOTAL PROJECT	SHEET No.	TOTAL SHEETS
04	Nap	29	47.0/47.2	38	146

REGISTERED CIVIL ENGINEER 4/24/14 DATE

6-23-14
PLANS APPROVAL DATE

REGISTERED PROFESSIONAL ENGINEER Jason R. Phoen No. 57553 Exp. 12-31-15 CIVIL STATE OF CALIFORNIA

THE STATE OF CALIFORNIA OR ITS OFFICERS OR AGENTS SHALL NOT BE RESPONSIBLE FOR THE ACCURACY OR COMPLETENESS OF SCANNED COPIES OF THIS PLAN SHEET.

NOTE:

FOR ACCURATE RIGHT OF WAY DATA, CONTACT RIGHT OF WAY ENGINEERING AT THE DISTRICT OFFICE.

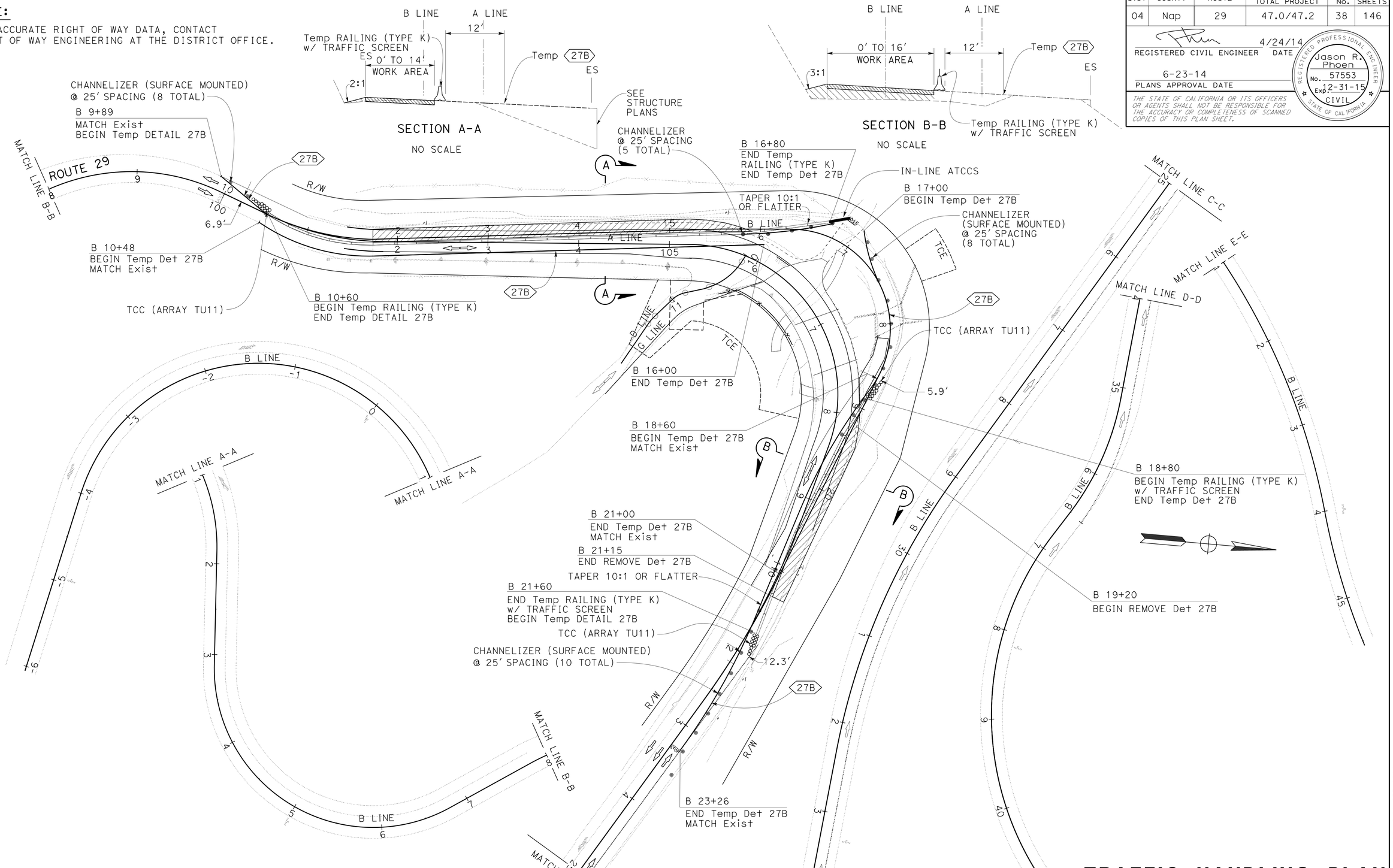

APPROVED FOR TRAFFIC HANDLING WORK ONLY

FOR NOTES, ABBREVIATIONS AND LEGEND, SEE SHEET TH-1

TRAFFIC HANDLING PLAN
STAGE 2
SCALE: 1" = 50'

TH-2

REVISED BY	DATE REVISED
JRP	4/24/14

JASON R PHOEN — STEWART LEE — CALCULATED-DESIGNED BY
CHECKED BY
FUNCTIONAL SUPERVISOR — STEWART LEE

STATE OF CALIFORNIA - DEPARTMENT OF TRANSPORTATION — Caltrans — DESIGN

LAST REVISION 04-15-14 — DATE PLOTTED => 08-SEP-2014 — TIME PLOTTED => 11:02

Dist	COUNTY	ROUTE	POST MILES TOTAL PROJECT	SHEET No.	TOTAL SHEETS
04	Nap	29	47.0/47.2	39	146

REGISTERED CIVIL ENGINEER 4/24/14 DATE

6-23-14
PLANS APPROVAL DATE

REGISTERED PROFESSIONAL ENGINEER Jason R. Phoen No. 57553 Exp. 12-31-15 CIVIL STATE OF CALIFORNIA

THE STATE OF CALIFORNIA OR ITS OFFICERS OR AGENTS SHALL NOT BE RESPONSIBLE FOR THE ACCURACY OR COMPLETENESS OF SCANNED COPIES OF THIS PLAN SHEET.

NOTE:

FOR ACCURATE RIGHT OF WAY DATA, CONTACT RIGHT OF WAY ENGINEERING AT THE DISTRICT OFFICE.

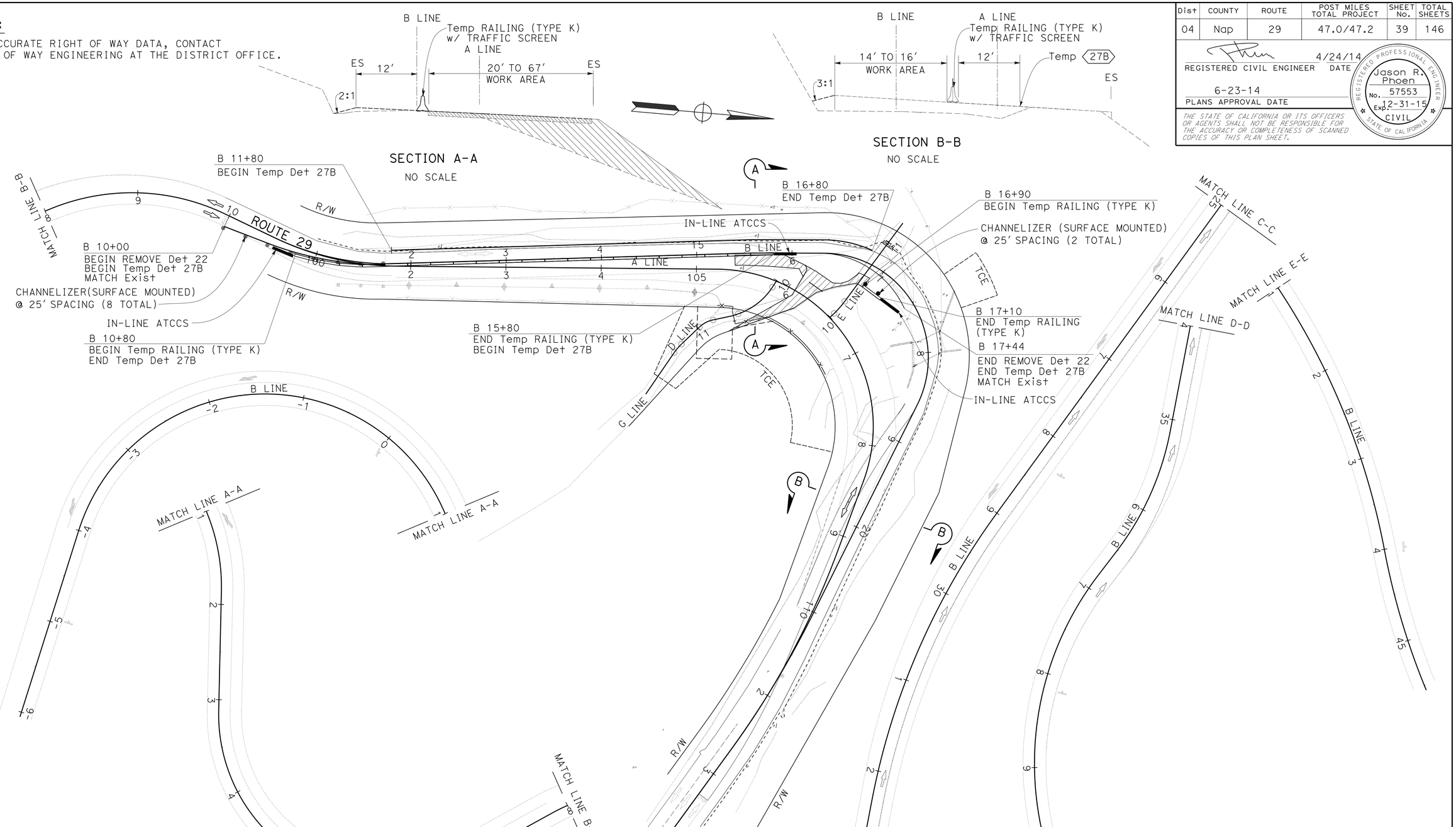

APPROVED FOR TRAFFIC HANDLING WORK ONLY

FOR NOTES, ABBREVIATIONS AND LEGEND, SEE SHEET TH-1

TRAFFIC HANDLING PLAN
STAGE 3
SCALE: 1" = 50'

TH-3

REVISED BY	JRP
DATE REVISED	4/24/14
CALCULATED-DESIGNED BY	JASON R PHOEN
CHECKED BY	STEWART LEE
FUNCTIONAL SUPERVISOR	STEWART LEE

STATE OF CALIFORNIA - DEPARTMENT OF TRANSPORTATION
Caltrans
DESIGN

LAST REVISION 04-15-14 | DATE PLOTTED => 08-SEP-2014 | TIME PLOTTED => 11:02

Dist	COUNTY	ROUTE	POST MILES TOTAL PROJECT	SHEET No.	TOTAL SHEETS
04	Nap	29	47.0/47.2	40	146

REGISTERED CIVIL ENGINEER 4/24/14 DATE

6-23-14
PLANS APPROVAL DATE

REGISTERED PROFESSIONAL ENGINEER Jason R. Phoen No. 57553 Exp. 12-31-15 CIVIL STATE OF CALIFORNIA

THE STATE OF CALIFORNIA OR ITS OFFICERS OR AGENTS SHALL NOT BE RESPONSIBLE FOR THE ACCURACY OR COMPLETENESS OF SCANNED COPIES OF THIS PLAN SHEET.

TEMPORARY RAILING (TYPE K)

SHEET No.	STAGE No.	STATION	DIRECTION	LF
TH-1	1	B 10+80 TO 15+30	NB	450
		B 16+80 TO 21+60		480
TH-2	2	B 10+60 TO 16+80	NB	620
		B 18+80 TO 21+60		280
TH-3	3	B 10+80 TO 15+80	NB	500
		B 16+90 TO 17+10		20
TOTAL				2350

TEMPORARY TRAFFIC SCREEN

SHEET No.	STAGE No.	STATION	DIRECTION	LF
TH-1	1	B 10+80 TO 15+30	NB	450
		B 16+80 TO 21+60		480
TH-2	2	B 10+60 TO 16+80	NB	620
		B 18+80 TO 21+60		280
TH-1	3	B 10+80 TO 15+80	NB	500
TOTAL				2330

ALTERNATIVE TEMPORARY CRASH CUSHION SYSTEM

SHEET No.	STAGE No.	STATION	DIRECTION	EA
TH-1	1	B 10+80	NB	1
		B 15+80	SB	1
		B 21+60	NB	1
TH-2	2	B 16+80	NB	1
TH-3	3	B 10+80	NB	1
		B 15+80		1
		B 17+10		1
TOTAL				7

TEMPORARY CRASH CUSHION

SHEET No.	STAGE No.	STATION	DIRECTION	EA
TH-1	1	B 16+80	NB	11
TH-2	2	B 10+60	NB	11
		B 18+80		11
		B 21+60		11
TOTAL				44

TEMPORARY ROADWAY

SHEET No.	STATION	HMA (TYPE A)	IMPORTED BORROW	ROADWAY EXCAVATION	EMBANKMENT (N)
		TON	CY		
TH-1	B 15+30 TO 15+40	10	1	6	1
	B 18+17 TO 19+00	177	59	146	59
TOTAL		187	60	192	60

(N) NOT A SEPARATE PAY ITEM, FOR INFORMATION ONLY.

TRAFFIC HANDLING QUANTITIES

THQ-1

JRP	REVISED BY
4/24/14	DATE REVISED
JASON R PHOEN	CALCULATED-DESIGNED BY
STEWART LEE	CHECKED BY
STEWART LEE	FUNCTIONAL SUPERVISOR
DESIGN	

STATE OF CALIFORNIA - DEPARTMENT OF TRANSPORTATION

Caltrans

LAST REVISION 04-15-14 DATE PLOTTED => 08-SEP-2014 TIME PLOTTED => 11:02

Dist	COUNTY	ROUTE	POST MILES TOTAL PROJECT	SHEET No.	TOTAL SHEETS
04	Nap	29	47.0/47.2	41	146

REGISTERED CIVIL ENGINEER 4/24/14 DATE

6-23-14
PLANS APPROVAL DATE

REGISTERED PROFESSIONAL ENGINEER Jason R. Phoen No. 57553 Exp. 12-31-15 CIVIL STATE OF CALIFORNIA

THE STATE OF CALIFORNIA OR ITS OFFICERS OR AGENTS SHALL NOT BE RESPONSIBLE FOR THE ACCURACY OR COMPLETENESS OF SCANNED COPIES OF THIS PLAN SHEET.

REMOVE PAVEMENT DELINEATION

SHEET No.	STAGE No.	STATION	DETAIL No.	REMOVE TRAFFIC STRIPE PAINT 4" WHITE	REMOVE TRAFFIC STRIPE THERMO 4" YELLOW	REMOVE PAINTED TRAFFIC STRIPE 4" WHITE	REMOVE PAVEMENT MARKER TYPE D	REMOVE PAVEMENT MARKER TYPE G	REMOVE THERMO PAVEMENT MARKING ARROW	REMOVE PAINTED PAVEMENT MARKING STOP	REMOVE PAINTED PAVEMENT MARKING 12" WHITE
				FT			EA			SQFT	
TH-1	1	B 10+50 TO 16+80	27B	630							
		B 10+00 TO 22+42	22		2484		106				
		B 23+26 TO 35+13	9	1187				26			
		B 10+00 TO 16+00	27B	600							
		B 18+75 TO 21+00	27B	225							
		B 23+75							42		
		B 25+80							42		
		B 34+00							42		
TH-2	2	B 19+20 TO 21+15	27B	195							
		B 10+00 TO 11+80	27B			180					
		B 21+00 TO 22+42	27B			142					
		B 10+50 TO 16+80	27B			630					
TH-3	3	B 9+89 TO 10+60	27B			71					
		B 10+48 TO 16+00	27B			552					
TH-4	4	B 16+80 TO 19+20	27B	240							
		B 16+00 TO 18+75	27B	275							
		B 18+60 TO 21+00	27B			240					
		B 10+00 TO 10+80	27B			80					
		B 15+80 TO 17+44	27B			164					
		B 21+60 TO 23+26	27B			166					
		B 11+80 TO 16+80	27B			500					
		B 17+00 TO 18+80				180					
		B 21+83 TO 36+55				1472					
		B 10+00 TO	LIMIT LINE							22	12
		B 23+26 TO								22	12
		NORTHBOUND DRIVEWAY								22	12
		SOUTHBOUND DRIVEWAY								22	12
SUBTOTAL				3352	2484	4377	106	26	126	88	48
TOTAL				3352	2484	4377	132		126	136	

TEMPORARY TRAFFIC STRIPE AND PAVEMENT MARKING (PAINT)

SHEET No.	STAGE No.	STATION	DETAIL No.	Temp TRAFFIC STRIPE 4" WHITE	Temp PAVEMENT MARKING 12" WHITE	Temp PAVEMENT MARKING STOP
				LF	SQFT	
TH-1	1	B 10+00 TO 11+80	27B	180		
		B 21+00 TO 22+42		142		
		B 10+50 TO 16+80		630		
		B 21+83 TO 36+55		1472		
		B 10+00	LIMIT LINE		12	22
		B 23+26			12	22
		NORTHBOUND DRIVEWAY			12	22
		SOUTHBOUND DRIVEWAY			12	22
TH-2	2	B 9+89 TO 10+60	27B	71		
		B 17+00 TO 18+80		180		
		B 21+60 TO 23+26		166		
		B 10+48 TO 16+00		552		
		B 18+60 TO 21+00		240		
TH-3	3	B 10+00 TO 10+80	27B	80		
		B 15+80 TO 17+44		164		
		B 11+80 TO 16+80		500		
SUBTOTAL				4377	48	88
TOTAL				4377	136	

CHANNELIZERS (SURFACE MOUNTED)

SHEET No.	STAGE No.	STATION	DIRECTION	EA
TH-1	1	B 10+00 TO 12+00	NB	8
		B 21+00 TO 22+42		6
TH-2	2	B 9+89 TO 11+80	NB	8
		B 15+80 TO 16+80	SB/NB	5
		B 17+00 TO 18+80	NB	8
		B 21+00 TO 23+26		10
TH-3	3	B 10+00 TO 11+80	NB	8
		B 16+90 TO 17+10		2
TOTAL				55

TRAFFIC HANDLING QUANTITIES

THQ-2

REVISED BY	DATE REVISED
JRP	4/24/14

CALCULATED-DESIGNED BY	CHECKED BY
JASON R PHOEN	STEWART LEE

FUNCTIONAL SUPERVISOR: STEWART LEE

STATE OF CALIFORNIA - DEPARTMENT OF TRANSPORTATION

Caltrans® DESIGN

LAST REVISION 04-15-14 | DATE PLOTTED => 08-SEP-2014 | TIME PLOTTED => 11:02

Dist	COUNTY	ROUTE	POST MILES TOTAL PROJECT	SHEET No.	TOTAL SHEETS
04	Nap	29	47.0/47.2	42	16

REGISTERED CIVIL ENGINEER 4/24/14 DATE

6-23-14
PLANS APPROVAL DATE

REGISTERED PROFESSIONAL ENGINEER Jason R. Phoen No. 57553 Exp. 12-31-15 CIVIL STATE OF CALIFORNIA

THE STATE OF CALIFORNIA OR ITS OFFICERS OR AGENTS SHALL NOT BE RESPONSIBLE FOR THE ACCURACY OR COMPLETENESS OF SCANNED COPIES OF THIS PLAN SHEET.

NOTE:

FOR ACCURATE RIGHT OF WAY DATA, CONTACT RIGHT OF WAY ENGINEERING AT THE DISTRICT OFFICE.

LEGEND:

DELINEATOR (CLASS 1)

(L-1) OBJECT MARKER (TYPE L-1)

NOTE:

1. ALL DELINEATORS SPACING ARE 20′ APART UNLESS OTHERWISE NOTED.

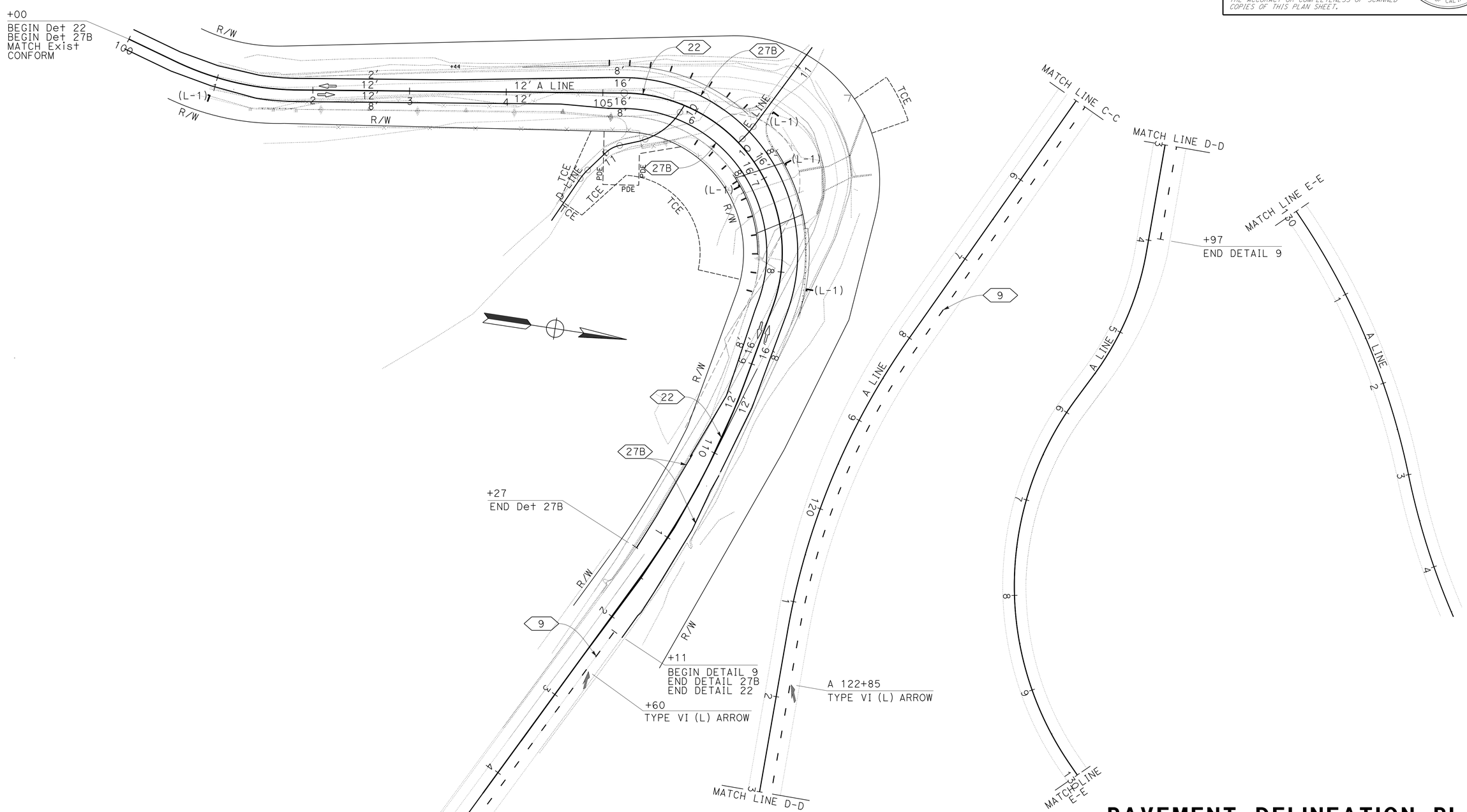

PAVEMENT DELINEATION PLAN

SCALE: 1" = 50′

APPROVED FOR PAVEMENT DELINEATION WORK ONLY

PD-1

JRP	4/24/14
REVISED BY	DATE REVISED
JASON R PHOEN	STEWART LEE
CALCULATED-DESIGNED BY	CHECKED BY
FUNCTIONAL SUPERVISOR	STEWART LEE

STATE OF CALIFORNIA - DEPARTMENT OF TRANSPORTATION

Caltrans

TRAFFIC

LAST REVISION 06-24-14 | DATE PLOTTED => 08-SEP-2014 | TIME PLOTTED => 11:02

Dist	COUNTY	ROUTE	POST MILES TOTAL PROJECT	SHEET No.	TOTAL SHEETS
04	Nap	29	47.0/47.2	43	146

REGISTERED CIVIL ENGINEER 4/24/14 DATE

6-23-14
PLANS APPROVAL DATE

REGISTERED PROFESSIONAL ENGINEER Jason R. Phoen No. 57553 Exp. 12-31-15 CIVIL STATE OF CALIFORNIA

THE STATE OF CALIFORNIA OR ITS OFFICERS OR AGENTS SHALL NOT BE RESPONSIBLE FOR THE ACCURACY OR COMPLETENESS OF SCANNED COPIES OF THIS PLAN SHEET.

TRAFFIC STRIPES, PAVEMENT MARKERS AND PAVEMENT MARKINGS

STATION	DIRECTION	DETAIL No.	PAVEMENT MARKER (RETROREFLECTIVE)		THERMOPLASTIC TRAFFIC STRIPE			DELINEATOR/ OBJECT MARKER		PAVEMENT MARKING ARROW (TYPE VI)
			TYPE D	TYPE G	4" WHITE BROKEN	4" WHITE SOLID	4" YELLOW SOLID	DELINEATOR (CLASS 1)	OBJECT MARKER (TYPE L-1)	
			EA		LF			EA		SQFT
A 100+00 TO 112+11	CENTER	22	104				2422			
A 100+00 TO 111+27	NB	27B				1127		10	2	
A 100+00 TO 112+11	SB	27B				1211		15	3	
A 112+11 TO 123+97	SB	9		26	1186					
A 112+60	SB									42
A 114+65	SB									42
A 122+85	SB									42
SUBTOTAL			104	26	1186	2338	2422	25	5	126
TOTAL			130		5946			25	5	126

PAVEMENT DELINEATION QUANTITIES

PDQ-1

STATE OF CALIFORNIA - DEPARTMENT OF TRANSPORTATION
Caltrans
TRAFFIC

FUNCTIONAL SUPERVISOR: STEWART LEE
CALCULATED-DESIGNED BY: JASON R PHOEN
CHECKED BY: STEWART LEE
REVISED BY: JRP
DATE REVISED: 4/24/14

LAST REVISION 04-10-14
DATE PLOTTED => 08-SEP-2014
TIME PLOTTED => 11:02

Dist	COUNTY	ROUTE	POST MILES TOTAL PROJECT	SHEET No.	TOTAL SHEETS
04	Nap	29	47.0/47.2	44	146

REGISTERED CIVIL ENGINEER 4/28/14 DATE

6-23-14
PLANS APPROVAL DATE

REGISTERED PROFESSIONAL ENGINEER Jerilyn L. Struven No. 49964 Exp. 12-31-14 CIVIL STATE OF CALIFORNIA

THE STATE OF CALIFORNIA OR ITS OFFICERS OR AGENTS SHALL NOT BE RESPONSIBLE FOR THE ACCURACY OR COMPLETENESS OF SCANNED COPIES OF THIS PLAN SHEET.

NOTE:

1. EXACT LOCATION AND POSITION OF ROADSIDE SIGNS AND CONSTRUCTION AREA SIGNS TO BE DETERMINED BY THE ENGINEER.

LEGEND:

▲ REMOVE ROADSIDE SIGN

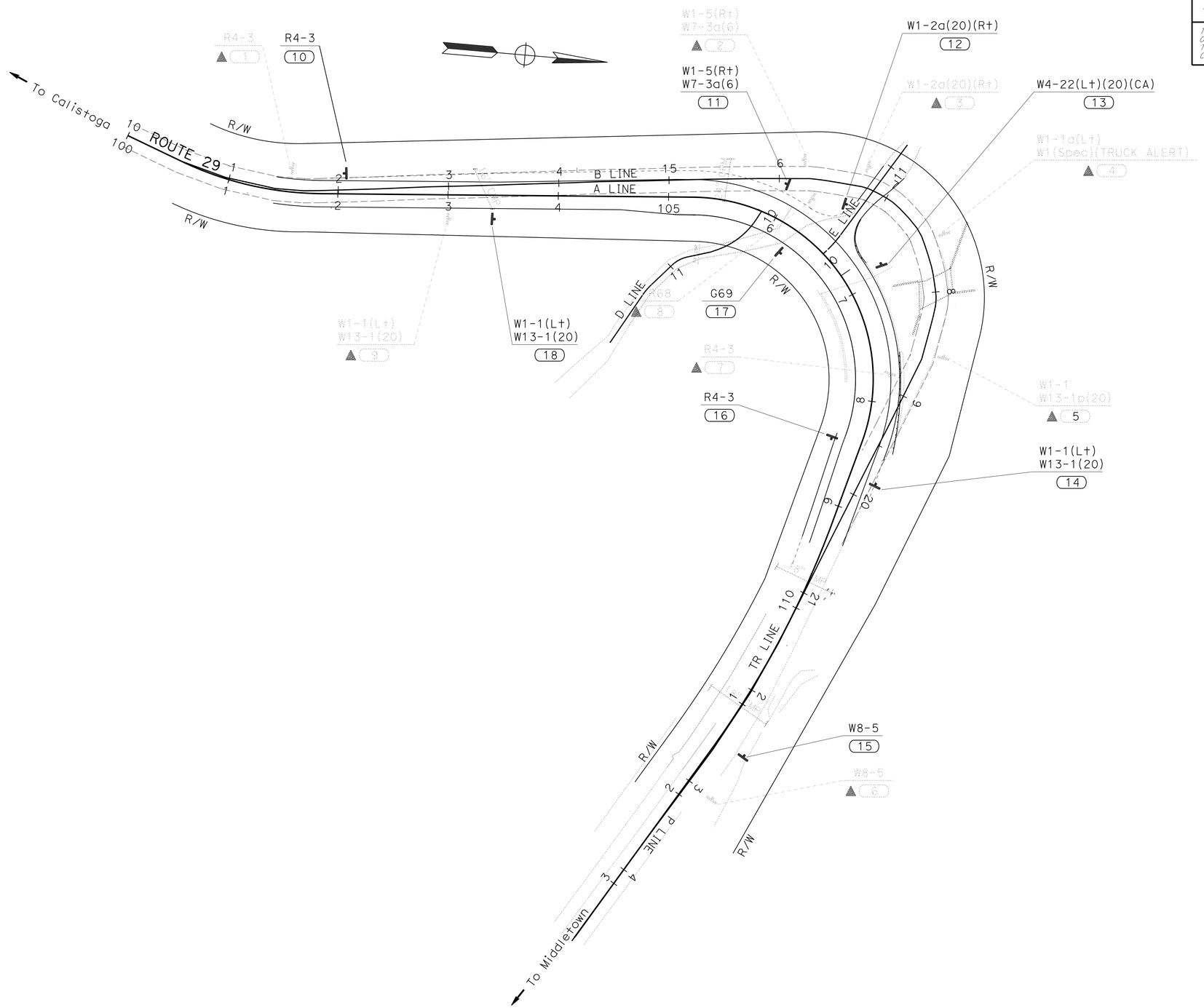

SIGN PLAN
NO SCALE

APPROVED FOR SIGN WORK ONLY

S-1

STATE OF CALIFORNIA - DEPARTMENT OF TRANSPORTATION
Caltrans
TRAFFIC

FUNCTIONAL SUPERVISOR: ROLAND AU-YEUNG
CALCULATED-DESIGNED BY: STEPHEN LAU
CHECKED BY: JERILYN STRUVEN
REVISED BY: SL
DATE REVISED: 4/24/14

LAST REVISION 04-15-14
DATE PLOTTED => 08-SEP-2014
TIME PLOTTED => 11:02

Dist	COUNTY	ROUTE	POST MILES TOTAL PROJECT	SHEET No.	TOTAL SHEETS
04	Nap	29	47.0/47.2	45	146

REGISTERED CIVIL ENGINEER 4/28/14 DATE

6-23-14
PLANS APPROVAL DATE

REGISTERED PROFESSIONAL ENGINEER
Jerilyn L. Struven
No. 49964
Exp. 12-31-14
CIVIL
STATE OF CALIFORNIA

THE STATE OF CALIFORNIA OR ITS OFFICERS OR AGENTS SHALL NOT BE RESPONSIBLE FOR THE ACCURACY OR COMPLETENESS OF SCANNED COPIES OF THIS PLAN SHEET.

ROADSIDE SIGN INSTALLATION

SHEET No.	SIGN NUMBER	SIGN CODE	PANEL SIZE	POST SIZE LENGTH 4" x 4"	POST SIZE LENGTH 4" x 6"	ROADSIDE SIGN ONE POST	ROADSIDE SIGN TWO POST	REMOVE ROADSIDE SIGN	REMOVE ROADSIDE SIGN (SSBM)		REMARKS
S-1	1	R4-3						1			
	2	W1-5 (R†)						1			
		W7-3a (6)									
	3	W1-2a (20)(R†)						1			
	4	W4 (L†)						1			
		W (Spec)(TRUCK ALERT)									
	5	W1-1						1			
		W13-1P (20)									
	6	W8-5						1			
	7	R4-3						1			
	8	R68						1			
	9	W1-1 (L†)						1			
		W13-1 (20)									
	10	R4-3	36" x 48"		15'-6"	1					
	11	W1-5 (R†)	36" x 36"		16'-0"	1					
		W7-3a (6)	24" x 18"								
	12	W1-2a (20)(R†)	36" x 36"		14'-6"	1					
	13	W4-22 (L†)(20)(CA)	72" x 72"		18'-0"		1				
	14	W1-1 (L†)	36" x 36"		16'-0"	1					
		W13-1 (20)	24" x 24"								
	15	W8-5	36" x 36"		14'-6"	1					
	16	R4-3	36" x 48"		15'-6"	1					
	17	G69	48" x 36"		14'-6"	1					
	18	W1-1 (L†)	36" x 36"		16'-0"	1					PASSING LANE AHEAD
		W13-1 (20)	24" x 24"								
TOTAL						8	1	9			

SIGN QUANTITIES

SQ-1

STATE OF CALIFORNIA - DEPARTMENT OF TRANSPORTATION
Caltrans
TRAFFIC

FUNCTIONAL SUPERVISOR: ROLAND AU-YEUNG
CALCULATED-DESIGNED BY: STEPHEN LAU
CHECKED BY: JERILYN STRUVEN
REVISED BY: SL
DATE REVISED: 4/24/14

LAST REVISION 04-15-14 | DATE PLOTTED => 08-SEP-2014 | TIME PLOTTED => 11:02

Dist	COUNTY	ROUTE	POST MILES TOTAL PROJECT	SHEET No.	TOTAL SHEETS
04	Nap	29	47.0/47.2	46	146

REGISTERED CIVIL ENGINEER 4/28/14 DATE

6-23-14
PLANS APPROVAL DATE

REGISTERED PROFESSIONAL ENGINEER Jerilyn L. Struven No. 49964 Exp. 12-31-14 CIVIL STATE OF CALIFORNIA

THE STATE OF CALIFORNIA OR ITS OFFICERS OR AGENTS SHALL NOT BE RESPONSIBLE FOR THE ACCURACY OR COMPLETENESS OF SCANNED COPIES OF THIS PLAN SHEET.

SIGN PANEL SUMMARY

SHEET No.	SIGN				SINGLE FACED	BACKGROUND		LEGEND		PROTECTIVE OVERLAY	FURNISHED SINGLE SHEET ALUMINUM (0.063") UNFRAMED	DESCRIPTION
	SIGN No.	SIGN CODE	PANEL SIZE	SQFT		SHEETING COLOR	RETRO-REFLECTED ASTM TYPE	SHEETING COLOR	RETRO-REFLECTED ASTM TYPE	PREMIUM	SQFT	
S-1	10	R4-3	36" x 48"	12.00	X	WHITE	III	BLACK		X	12.00	
	11	W1-5 (R†)	36" x 36"	9.00	X	YELLOW	XIII	BLACK		X	9.00	
		W7-3a (6)	24" x 18"	3.00	X	YELLOW	XIII	BLACK		X	3.00	
	12	W1-2a (20)(R†)	36" x 36"	9.00	X	YELLOW	XIII	BLACK		X	9.00	
	13	W4-22 (L†)(20)(CA)	72" x 72"	36.00	X	YELLOW	XIII	BLACK		X	36.00	
	14	W1-1 (L†)	36" x 36"	9.00	X	YELLOW	XIII	BLACK		X	9.00	
		W13-1 (20)	24" x 24"	4.00	X	YELLOW	XIII	BLACK		X	4.00	
	15	W8-5	36" x 36"	9.00	X	YELLOW	XIII	BLACK		X	9.00	
	16	R4-3	36" x 48"	12.00	X	WHITE	III	BLACK		X	12.00	
	17	G69	48" x 36"	12.00	X	GREEN	III	WHITE		X	12.00	
	18	W1-1 (L†)	36" x 36"	9.00	X	YELLOW	XIII	BLACK		X	9.00	
		W13-1 (20)	24" x 24"	4.00	X	YELLOW	XIII	BLACK		X	4.00	
TOTAL				128.00							128.00	

SIGN QUANTITIES

SQ-2

STATE OF CALIFORNIA - DEPARTMENT OF TRANSPORTATION
Caltrans
TRAFFIC

FUNCTIONAL SUPERVISOR: ROLAND AU-YEUNG
CALCULATED-DESIGNED BY: STEPHEN LAU
CHECKED BY: JERILYN STRUVEN
REVISED BY: SL
DATE REVISED: 4/24/14

LAST REVISION 03-14-14
DATE PLOTTED => 08-SEP-2014
TIME PLOTTED => 11:02

Dist	COUNTY	ROUTE	POST MILES TOTAL PROJECT	SHEET No.	TOTAL SHEETS
04	Nap	29	47.0/47.2	47	146

REGISTERED CIVIL ENGINEER 4/24/14 DATE

6-23-14
PLANS APPROVAL DATE

REGISTERED PROFESSIONAL ENGINEER Jason R. Phoen No. 57553 Exp. 12-31-15 CIVIL STATE OF CALIFORNIA

THE STATE OF CALIFORNIA OR ITS OFFICERS OR AGENTS SHALL NOT BE RESPONSIBLE FOR THE ACCURACY OR COMPLETENESS OF SCANNED COPIES OF THIS PLAN SHEET.

ROADWAY QUANTITIES

STATION	SHEET No.	HMA (TYPE A) CONSTRUCT ROADWAY	HMA (TYPE A) DIKE
		TON	
A 101+22 TO 110+60	L-1	2793	9
D 10+06 TO 11+60	L-1	167	
E 20+00 TO 20+86	L-1	137	
SUBTOTAL		3097	9
TOTAL		3106	

REMOVE GUARDRAIL

STATION	SHEET No.	DIRECTION	LF
B 17+10 TO 18+40	L-1	SB	130
B 17+12 TO 18+42	L-1	NB	130
TOTAL			260

PLACE HMA DIKE

STATION	SHEET No.	DIRECTION	HMA DIKE (TYPE E)
			LF
A 101+85 TO 103+45	L-1	SB	160
A 108+15 TO 109+75	L-1	NB	160
TOTAL			320

ALTERNATIVE IN-LINE TERMINAL SYSTEM

STATION	SHEET No.	DIRECTION	EA
A 100+84	L-1	NB	1

REMOVE AC SURFACING

STATION	SHEET No.	DIRECTION	CY
B 11+90 TO 15+90	L-1	NB,SB	139
B 19+00 TO 21+30	L-1	NB,SB	35
TOTAL			174

6" PERFORATED PLASTIC PIPE UNDERDRAIN

STATION	SHEET No.	DIRECTION	LF
A 106+01 TO 106+33	DD-9	SB	32

IMPORTED BIOFILTRATION SOIL

STATION	SHEET No.	DIRECTION	CY
A 106+01 TO 106+33	DD-9	SB	72

BIOSWALE (BIOFILTRATION) BASIN

STATION	SHEET No.	DIRECTION	PERMEABLE MATERIAL CLASS 2	PERMEABLE MATERIAL CLASS 3	ROCKSLOPE PROTECTION FABRIC CLASS 8
			CY		SQYD
A 106+01 TO 106+33	DD-9	SB	10	30	190

MIDWEST GUARDRAIL SYSTEM

STATION	SHEET No.	DIRECTION	WOOD POST	TRANSITION RAILING (TYPE WB-31)	END CAP	END ANCHOR ASSEMBLY (TYPE SFT)
			LF	EA		
A 101+34 TO 101+59	L-1	NB	25	1		
A 105+30 TO 106+44	L-1	SB	114		1	1
A 106+60 TO 106+80	L-1	SB	20	1		
A 107+81 TO 108+50	L-1	SB	69	1		
TOTAL			228	3	1	1

STAIN GALVANIZED SURFACES

TITLES	STATION	LF
BARRIER 736	A 101+84 TO 105+19	361
BARRIER 736 INSIDE CURVE	A 105+80 TO 108+37	232
BARRIER 742 OUTSIDE CURVE	A 106+67 TO 107+79	113
TOTAL		706

EARTHWORK QUANTITIES

STATION	SHEET No.	ROADWAY EXCAVATION	EMBANKMENT (N)	IMPORTED BORROW
		CY		
A 101+84 TO 109+97	L-1	3331	3086	
D 10+06 TO 11+60	L-1	0	432	
E 20+00 TO 20+86	L-1	4	394	
A 106+01 TO 106+33	DD-9	130		
TOTAL		3465	3912	447

(N) NOT A SEPARATE PAY ITEM, FOR INFORMATION ONLY

ANTI-GRAFFITI COATING

STATION	SHEET No.	DIRECTION	SQFT
A 105+80 TO 108+37	L-1	NB	3200
A 106+67 TO 107+79	L-1	SB	1370
TOTAL			4570

REMOVE BASE AND SURFACING

STATION	SHEET No.	DIRECTION	CY
B 15+38 TO 17+86	L-1	NB,SB	212
B 18+09 TO 19+36	L-1	NB,SB	108
TOTAL			320

TACK COAT

STATION	SHEET No.	DIRECTION	TON
A 101+85 TO 106+90	L-1	NB,SB	2.5
A 107+50 TO 110+15	L-1	NB,SB	1.5
TOTAL			4

PREPARE AND STAIN CONCRETE

STATION	SHEET No.	DIRECTION	SQFT
A 105+80 TO 108+37	L-1	NB	3200
A 106+67 TO 107+79	L-1	SB	1370
TOTAL			4570

TEMPORARY WILDLIFE EXCLUSION FENCE (WEF)

STATION	SHEET No.	DIRECTION	LF
B 11+34 TO 21+14	L-1	SB	1200
B 11+34 TO 21+14	L-1	NB	800
TOTAL			2000

TEMPORARY FENCE (TYPE CL-6)

STATION	SHEET No.	DIRECTION	LF
B 17+50	E-2	SB	40

FENCE (TYPE BW)

STATION	SHEET No.	DIRECTION	LF
A 101+34 TO 107+00	L-1	NB	566

REMOVE FENCE

STATION	SHEET No.	DIRECTION	LF
A 101+55 TO 107+00	L-1	NB	573

TEMPORARY GATE (TYPE CL-6)

STATION	SHEET No.	DIRECTION	EA
B 17+50	E-2	SB	1

RELOCATE GATE

STATION	SHEET No.	DIRECTION	EA
A 106+10 TO 105+50	L-1	NB	1

RESET GATE

STATION	SHEET No.	DIRECTION	EA
A 106+40	L-1	SB	1

SUMMARY OF QUANTITIES

Q-1

JRP	4/24/14	REVISED BY	DATE REVISED
JASON R PHOEN	STEWART LEE	CALCULATED-DESIGNED BY	CHECKED BY
FUNCTIONAL SUPERVISOR	STEWART LEE		

STATE OF CALIFORNIA - DEPARTMENT OF TRANSPORTATION
Caltrans® DESIGN

LAST REVISION 06-24-14 | DATE PLOTTED => 08-SEP-2014 | TIME PLOTTED => 11:02

Dist	COUNTY	ROUTE	POST MILES TOTAL PROJECT	SHEET No.	TOTAL SHEETS
04	Nap	29	47.0/47.2	48	146

LICENSED LANDSCAPE ARCHITECT

6-23-14
PLANS APPROVAL DATE

LICENSED LANDSCAPE ARCHITECT
Name & License No.
Signature
3-31-15
Renewal Date
4-24-14
Date
STATE OF CALIFORNIA

THE STATE OF CALIFORNIA OR ITS OFFICERS OR AGENTS SHALL NOT BE RESPONSIBLE FOR THE ACCURACY OR COMPLETENESS OF SCANNED COPIES OF THIS PLAN SHEET.

IRRIGATION SPRINKLER SCHEDULE

SYMBOL	DESCRIPTION	SPRAY PATTERN	OPERATING PRESSURE (psi)	PRESSURE COMPENSATING	PLUS/MINUS 5% ② DISCHARGE: GALLONS PER MINUTE (GPM)	DISCHARGE: GALLONS PER HOUR (GPH)	RADIUS (ft)	WIDTH x LENGTH (ft)	FLOW SHUTOFF DEVICE	SPRINLKER ASSEMBLY: RISER: TYPE	RISER: MATERIAL: PLASTIC	RISER: MATERIAL: GALVANIZED	RISER: SIZE (IPS INCH)	RISER: HEIGHT (INCH)	RISER: SWING JOINT (TYPE)	POP-UP: TYPE	POP-UP: INLET CONNECTION (NPT INCH)	POP-UP: HEIGHT (INCH)	POP-UP: SPRINLKER PROTECTOR (TYPE) ④	TREE WELL: HEIGHT (INCH)	TREE WELL: SWING JOINT (TYPE)	REMARKS
o	FLOOD BUBBLER	-	40	X	0.25	-	-	-	-	V	X	-	1/2	-	-	-	-	-	-	-	-	⑥

X IN BOX DENOTES REQUIREMENT

APPLICABLE WHEN CIRCLED BELOW:

1 - SEE SPECIAL PROVISIONS.
② - IF A PRESSURE COMPENSATING DEVICE IS SPECIFIED, THE DISCHARGE AND RADII SHOWN REFLECT ITS USE.
3 - VINYL-COATED CAST IRON HOUSING.
4 - SPRINKLER PROTECTORS REQUIRED ADJACENT TO SHOULDERS, CURBS, SIDEWALKS, AND DIKES.
5 - UNLESS OTHERWISE SHOWN ON PLANS.
⑥ - INSTALL ON UPHILL SIDE OF PLANT BASIN.

IRRIGATION SPRINKLER SCHEDULE
ISS-1

STATE OF CALIFORNIA - DEPARTMENT OF TRANSPORTATION
Caltrans® LANDSCAPE ARCHITECTURE

SENIOR LANDSCAPE ARCHITECT: SUSAN LINDSAY

CALCULATED-DESIGNED BY: MARTY HOGAN
CHECKED BY: SUSAN M. LINDSAY
REVISED BY: MH
DATE REVISED: 4/24/14

LAST REVISION: 00-00-00
DATE PLOTTED => 08-SEP-2014
TIME PLOTTED => 11:02

Dist	COUNTY	ROUTE	POST MILES TOTAL PROJECT	SHEET No.	TOTAL SHEETS
04	NAP	29	47.0/47.2	49	146

LICENSED LANDSCAPE ARCHITECT

6-23-14
PLANS APPROVAL DATE

LICENSED LANDSCAPE ARCHITECT
MARTIN A. HOGAN No. 4254
Signature
3-31-15
Renewal Date
4-24-14
Date
STATE OF CALIFORNIA

THE STATE OF CALIFORNIA OR ITS OFFICERS OR AGENTS SHALL NOT BE RESPONSIBLE FOR THE ACCURACY OR COMPLETENESS OF SCANNED COPIES OF THIS PLAN SHEET.

NOTE:

FOR ACCURATE RIGHT OF WAY DATA, CONTACT
RIGHT OF WAY ENGINEERING AT THE DISTRICT OFFICE.

LEGEND:

BV SIZE
VALVE NUMBER
GPM
QUANTITY OF SPRINKLERS

1" - A2 - 3.0 | -6

IRRIGATION NOTE:

1. UNLABELED PIPE MUST BE 3/4" SCH 40 ULTRA VIOLET RESISTANT PIPE ON GRADE, UNLESS OTHERWISE SHOWN.

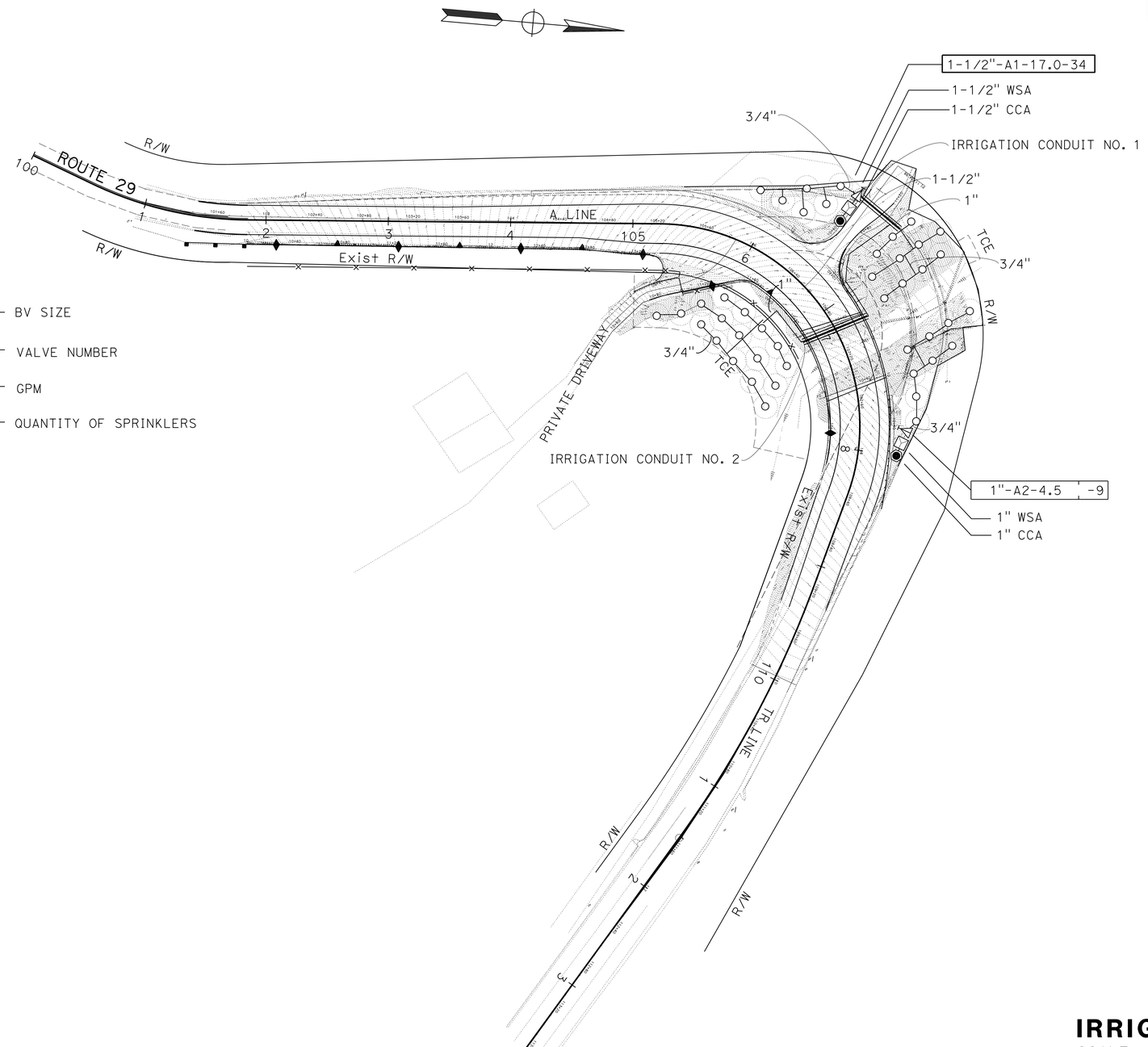

APPROVED FOR IRRIGATION WORK ONLY

IRRIGATION PLAN

SCALE: 1" = 50'

IP-1

STATE OF CALIFORNIA - DEPARTMENT OF TRANSPORTATION
Caltrans® LANDSCAPE ARCHITECTURE

SENIOR LANDSCAPE ARCHITECT: SUSAN LINDSAY
CALCULATED-DESIGNED BY: MARTY HOGAN
CHECKED BY: SUSAN LINDSAY
REVISED BY: MH
DATE REVISED: 4/24/14

LAST REVISION 00-00-00
DATE PLOTTED => 08-SEP-2014
TIME PLOTTED => 11:02

Dist	COUNTY	ROUTE	POST MILES TOTAL PROJECT	SHEET No.	TOTAL SHEETS
04	Nap	29	47.0/47.2	50	146

LICENSED LANDSCAPE ARCHITECT

6-23-14
PLANS APPROVAL DATE

LICENSED LANDSCAPE ARCHITECT
Name & License No.
Signature
3-31-15
Renewal Date
4-24-14
Date
STATE OF CALIFORNIA

THE STATE OF CALIFORNIA OR ITS OFFICERS OR AGENTS SHALL NOT BE RESPONSIBLE FOR THE ACCURACY OR COMPLETENESS OF SCANNED COPIES OF THIS PLAN SHEET.

SUBTOTALS PER VALVE ON LATERAL SUPPLY SIDE OF CONTROL VALVE

DESCRIPTION		UNIT	VALVE OR ASSEMBLY NUMBER A1	A2	SUBTOTALS	UNIT	DESCRIPTION	
PLASTIC PIPE SUPPLY LINE SCHEDULE 40 UVR	3/4 INCH	LF	700	190	890	LF	3/4 INCH	PLASTIC PIPE SUPPLY LINE SCHEDULE 40 UVR
	1 INCH	LF	210		210	LF	1 INCH	
	1-1/4 INCH	LF	60		60	LF	1 1/4 INCH	
WSP CONDUIT	4 INCH	LF	90		90	LF	4 INCH	WSP CONDUIT
DIP								DIP
SPRINKLER ASSEMBLY TYPE	RISER V	EA	34	9	43	EA	RISER V	SPRINKLER ASSEMBLY TYPE

IRRIGATION CONDUIT

SHEET No.	IRRIGATION CONDUIT No.	LOCATION LINE	LOCATION STATION	SIDE L†	SIDE R†	EXTENSION CONNECTION TYPE CB	EXTENSION CONNECTION TYPE OL	(N) WATER SUPPLY LINE SIZE (INCH)	(N) SPRINKLER CONTROL CONDUIT SIZE (INCH)	WELDED STEEL PIPE 4" LENGTH (LF)	WELDED STEEL PIPE XX" LENGTH (LF)	WELDED STEEL PIPE XX" LENGTH (LF)
IP-1	1	A-LINE	106+50	X	-	-	-	1-1/2	-	30	-	-
IP-1	2	A-LINE	107+00	X	X	-	-	1	-	60	-	-
									SUBTOTAL	90	-	-
									TOTAL	90	-	-

ABBREVIATIONS:
CB - COUPLING BAND
OL - OVERLAP

(N) - NOT A SEPARATE PAY ITEM, FOR INFORMATION ONLY
X - DENOTES REQUIREMENT

ABBREVIATION:
UVR - ULTRAVIOLET RESISTANT

IRRIGATION QUANTITIES

IQ-1

STATE OF CALIFORNIA - DEPARTMENT OF TRANSPORTATION
Caltrans
LANDSCAPE ARCHITECTURE

SENIOR LANDSCAPE ARCHITECT: SUSAN LINDSAY
CALCULATED-DESIGNED BY: MARTIN HOGAN
CHECKED BY: SUSAN LINDSAY
REVISED BY: MH
DATE REVISED: 4/24/14

LAST REVISION 00-00-00
DATE PLOTTED => 08-SEP-2014
TIME PLOTTED => 11:02

Dist	COUNTY	ROUTE	POST MILES TOTAL PROJECT	SHEET No.	TOTAL SHEETS
04	Nap	29	47.0/47.2	51	146

LICENSED LANDSCAPE ARCHITECT

PLANS APPROVAL DATE

LICENSED LANDSCAPE ARCHITECT MARTIN A. HOGAN No. 4854 Signature 3-31-15 Renewal Date 4-24-14 Date STATE OF CALIFORNIA

THE STATE OF CALIFORNIA OR ITS OFFICERS OR AGENTS SHALL NOT BE RESPONSIBLE FOR THE ACCURACY OR COMPLETENESS OF SCANNED COPIES OF THIS PLAN SHEET.

SUBTOTALS PER PLAN SHEET ON MAIN SUPPLY SIDE OF CONTROL VALVE

DESCRIPTION			UNIT	SHEET NUMBER IP-1	SUBTOTALS
BPA		ENCLOSURE			
BOOSTER PUMP					
IRRIGATION CONTROLLER		STATION			
		STATION			
		STATION			
	CEC	SINGLE			
		DOUBLE			
VALVES AND ASSEMBLIES	BV				
	WSA	1 INCH	EA	1	1
		1-½ INCH	EA	1	1
	CCA	1 INCH	EA	1	1
		1-½ INCH	EA	1	1
CONDUIT	CSP				
	WSP	4 INCH	LF	-	-
PLASTIC PIPE SUPPLY LINE	SCH 40	¾ INCH	LF	-	-
		1 INCH	LF	-	-
		1-1/4 INCH	LF	-	-
		1-1/2 INCH	LF	10	10
	UVR				
	PR 315				
DIP	GSP	3 INCH	LF	20	
	DIP				

TOTAL QUANTITIES

TOTALS	UNIT	DESCRIPTION		
		ENCLOSURE		BPA
		BOOSTER PUMP		
		STATION		IRRIGATION CONTROLLER
		STATION		
		STATION		
		SINGLE	CEC	
		DOUBLE		
1	EA	1 INCH	BV	VALVES AND ASSEMBLIES
1	EA	1-½ INCH	WSA	
1	EA	1 INCH	CCA	
1	EA	1-½ INCH		
90	LF	4 INCH	CSP / WSP	CONDUIT
890	LF	¾ INCH	SCH 40	PLASTIC PIPE SUPPLY LINE
210	LF	1 INCH		
60	LF	1-1/4" INCH		
10	LF	1-1/2" INCH		
			UVR / PR 315	
20	LF	3 INCH	GSP	
			DIP	
43	EA	RIVER V		SPRINKLER ASSEMBLY TYPE

IRRIGATION QUANTITIES

IQ-2

STATE OF CALIFORNIA - DEPARTMENT OF TRANSPORTATION

Caltrans® LANDSCAPE ARCHITECTURE

SENIOR LANDSCAPE ARCHITECT: SUSAN LINDSAY

CALCULATED-DESIGNED BY: MARTY HOGAN

CHECKED BY: SUSAN LINDSAY

REVISED BY: MH

DATE REVISED: 4/24/14

LAST REVISION: 00-00-00

DATE PLOTTED => 08-SEP-2014

TIME PLOTTED => 11:02

Dist	COUNTY	ROUTE	POST MILES TOTAL PROJECT	SHEET No.	TOTAL SHEETS
04	Nap	29	47.0/47.2	52	146

LICENSED LANDSCAPE ARCHITECT

6-23-14
PLANS APPROVAL DATE

LICENSED LANDSCAPE ARCHITECT — Name & License No. — Signature — 3-31-15 Renewal Date — 4-24-14 Date — STATE OF CALIFORNIA

THE STATE OF CALIFORNIA OR ITS OFFICERS OR AGENTS SHALL NOT BE RESPONSIBLE FOR THE ACCURACY OR COMPLETENESS OF SCANNED COPIES OF THIS PLAN SHEET.

ABBREVIATIONS:

AMA — Archeological Monitoring Area
AMEND — amendment
B & B — balled and burlapped
Dia — diameter
EA — each
LB — pound
Oz — ounce
Ft — foot/feet
SQFT — square feet
SQYD — square yard
CF — cubic feet
CY — cubic yard
Max — maximum
Min — minimum
NCN — no common name
No. — number
Pkt — packet
PLT ESTB — plant establishment
Pvmt — pavement
R/W — right of way
SF — state furnished
TRVD — traveled

PLANTING LEGEND

PLANT GROUP	PLANT No.	SYMBOL	BOTANICAL NAME	COMMON NAME	SIZE	QUANTITY EACH	HOLE SIZE (INCH) Dia	HOLE SIZE (INCH) DEPTH	BASIN TYPE	SOIL AMENDMENT (1) TYPE	SOIL AMENDMENT (1) RATE	IRON SULFATE (1) RATE	COMMERCIAL FERTILIZER (1) PLANTING	COMMERCIAL FERTILIZER (1) PLT ESTB	BASIN MULCH TYPE	BASIN MULCH CF	STAKING	PLANTING LIMITS MINIMUM DISTANCE (ft) FROM ETW	Pvmt	FENCE	WALL	PAVED DITCH	EARTH DITCH	ON CENTER (ft)	REMARKS
I	1	⊙	PSEUDOTSUGA MENZIESII	DOUGLAS FIR	TREE POT (13)	32	18	18	II	C	1.0 CF	--	2 Pkt	1.0 Oz	WC	1.8	--	30	--	20	15	15	16	(7)	TREE (9)
	2	⬡	UMBELLULARIA CALIFORNICA	BAY LAUREL	TREE POT (13)	6	18	18	II	C	1.0 CF	--	2 Pkt	1.0 Oz	WC	1.8	--	30	--	27	27	20	23	(7)	TREE (9)
	3	○	ACER MACROPHYLLUM	BIG LEAF MAPLE	TREE POT (13)	5	18	18	II	C	1.0 CF	--	2 Pkt	1.0 Oz	WC	1.8	--	30	--	20	20	20	23	(7)	TREE (9)
M	4	△	PSEUDOTSUGA MENZIESII	DOUGLAS FIR	LINERS (14)	32	6	12	II	C	0.25 CF	--	1 Pkt	1.0 Oz	WC	0.5	--	30	--	20	15	15	16	(7)	TREE (9)
	5	□	UMBELLULARIA CALIFORNICA	BAY LAUREL	LINERS (14)	6	6	12	II	C	0.25 CF	--	1 Pkt	1.0 Oz	WC	0.5	--	30	--	27	27	20	23	(7)	TREE (9)
	6	⊙	ACER MACROPHYLLUM	BIG LEAF MAPLE	LINERS (14)	5	6	12	II	C	0.25 CF	--	1 Pkt	1.0 Oz	WC	0.5	--		--	20	20	20	23	(7)	TREE (9)

NOTE:
UNDERLINED PORTIONS OF BOTANICAL NAME OR COMMON NAME INDICATE ABBREVIATIONS USED ON PLANTING PLANS.

ABBREVIATIONS

C - COMPOST
WC - WOOD CHIPS

LEGEND:

TCE — TEMPORARY CONSTRUCTION EASEMENT

APPLICABLE WHEN CIRCLED:

1 - QUANTITIES SHOWN ARE "PER PLANT" UNLESS SHOWN AS SQFT OR SQYD APPLICATION RATES
2 - BASIN MULCH IS INCLUDED WITH MULCH QUANTITIES SHOWN ON PLANTING PLAN
3 - SUFFICIENT TO RECEIVE ROOT BALL AND AMENDMENTS IF REQUIRED
4 - SEE STANDARD PLANS
5 - SEE SPECIAL PROVISIONS
6 - SEE STANDARD SPECIFICATIONS
(7) - AS SHOWN ON PLANS
8 - UNLESS OTHERWISE SHOWN ON PLANS
(9) - FOLIAGE PROTECTOR REQUIRED
10 - ROOT PROTECTOR REQUIRED
11 - ROOT BARRIER REQUIRED
12 - DEPARTMENT-FURNISHED
(13) - TREE POT MUST BE MINIMUM 4" X 4" X 14" DEEP.
(14) - LINER MUST BE MINIMUM 3" DIAMETER BY 8" DEEP.

PLANT LEGEND

PL-1

REVISED BY: MH — DATE REVISED: 4/24/14
MARTIN A HOGAN — SUSAN LINDSAY
CALCULATED-DESIGNED BY — CHECKED BY
SENIOR LANDSCAPE ARCHITECT: SUSAN LINDSAY
STATE OF CALIFORNIA - DEPARTMENT OF TRANSPORTATION
Caltrans® LANDSCAPE ARCHITECTURE

LAST REVISION 00-00-00 | DATE PLOTTED => 08-SEP-2014 | TIME PLOTTED => 11:02

Dist	COUNTY	ROUTE	POST MILES TOTAL PROJECT	SHEET No.	TOTAL SHEETS
04	NAP	29	47.0/47.2	53	146

LICENSED LANDSCAPE ARCHITECT

6-23-14
PLANS APPROVAL DATE

LICENSED LANDSCAPE ARCHITECT
MARTIN A. HOGAN No. 4054
Signature
3-31-15
Renewal Date
4-24-14
Date
STATE OF CALIFORNIA

THE STATE OF CALIFORNIA OR ITS OFFICERS OR AGENTS SHALL NOT BE RESPONSIBLE FOR THE ACCURACY OR COMPLETENESS OF SCANNED COPIES OF THIS PLAN SHEET.

NOTE:

FOR ACCURATE RIGHT OF WAY DATA, CONTACT RIGHT OF WAY ENGINEERING AT THE DISTRICT OFFICE.

NOTE:

1. PLANT (GROUP M) PLANTS MUST BE APPROXIMATELY 7'-6" FROM PLANT (GROUP I) PLANTS.

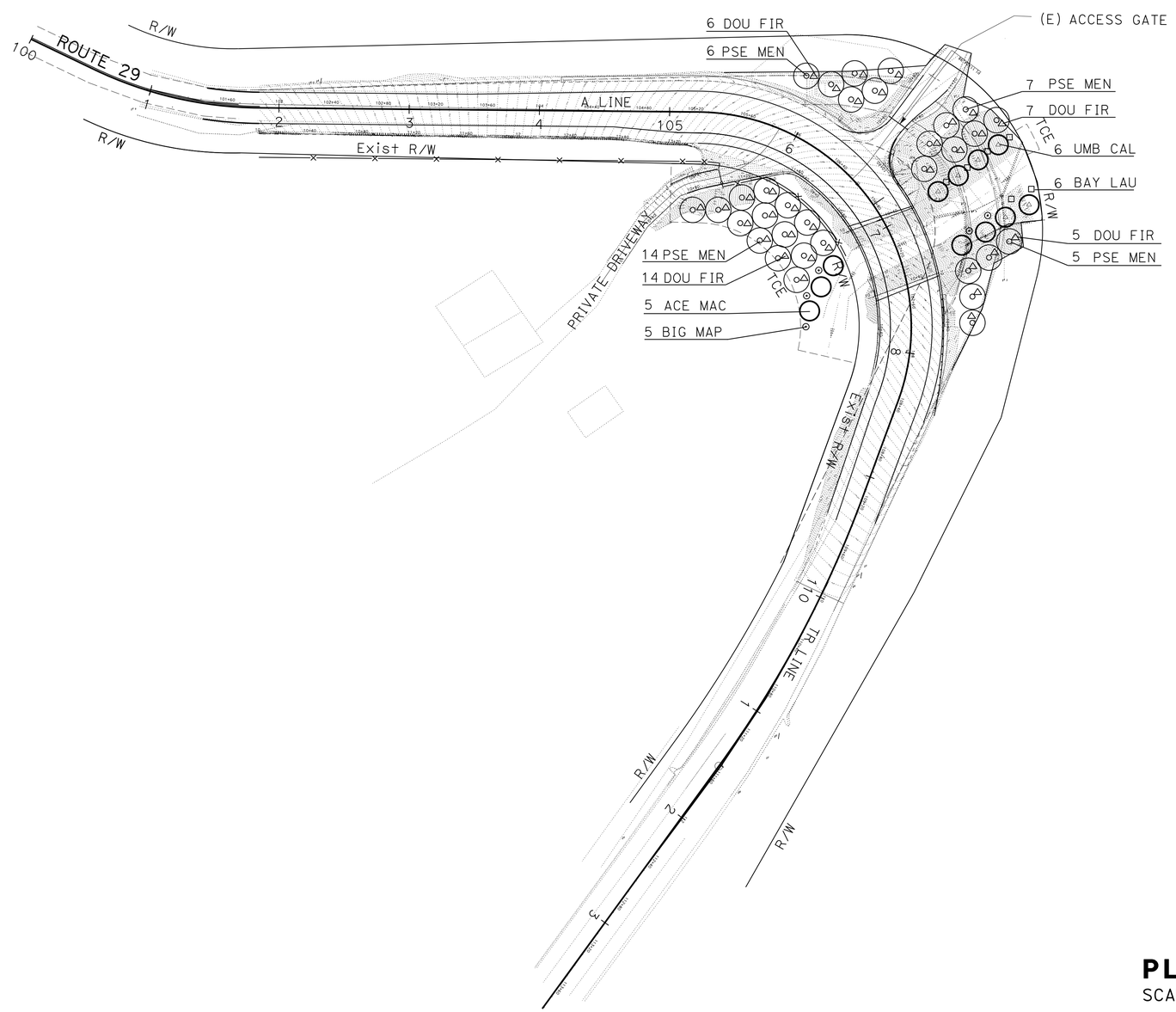

APPROVED FOR PLANTING WORK ONLY

PLANTING PLAN

SCALE: 1" = 50'

PP-1

STATE OF CALIFORNIA - DEPARTMENT OF TRANSPORTATION
Caltrans® LANDSCAPE ARCHITECTURE

SENIOR LANDSCAPE ARCHITECT: SUSAN LINDSAY

CALCULATED-DESIGNED BY: MARTY HOGAN
CHECKED BY: SUSAN LINDSAY

REVISED BY: JRP
DATE REVISED: 4/24/14

LAST REVISION 00-00-00
DATE PLOTTED => 08-SEP-2014
TIME PLOTTED => 11:03

Dist	COUNTY	ROUTE	POST MILES TOTAL PROJECT	SHEET No.	TOTAL SHEETS
04	Nap	29	47.0/47.2	54	146

LICENSED LANDSCAPE ARCHITECT

6-23-14
PLANS APPROVAL DATE

LICENSED LANDSCAPE ARCHITECT
Name & License No.
Signature
3-31-15
Renewal Date
4-24-14
Date
STATE OF CALIFORNIA

THE STATE OF CALIFORNIA OR ITS OFFICERS OR AGENTS SHALL NOT BE RESPONSIBLE FOR THE ACCURACY OR COMPLETENESS OF SCANNED COPIES OF THIS PLAN SHEET.

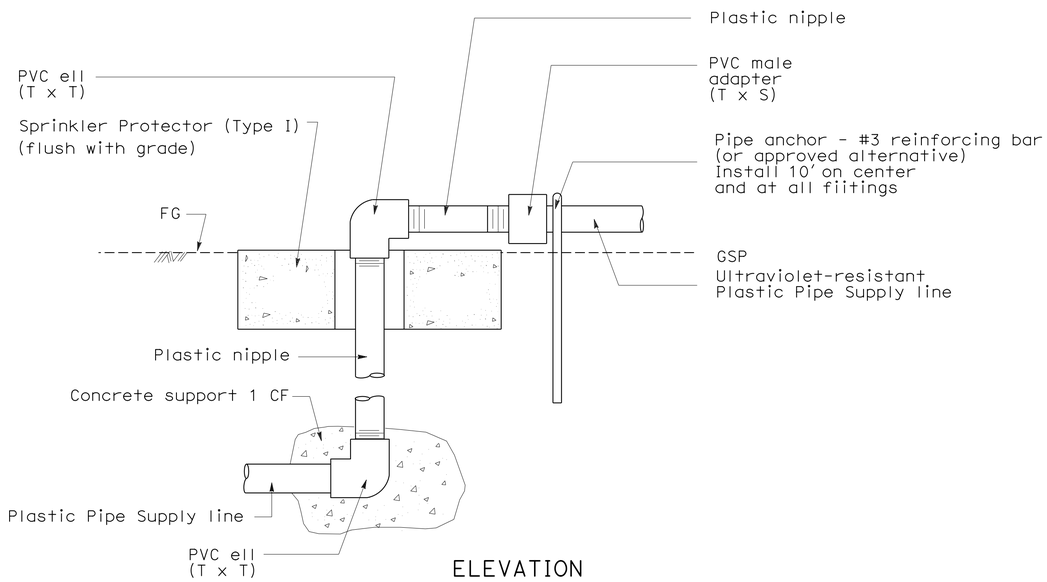

ELEVATION

PIPE ON GRADE TRANSITION

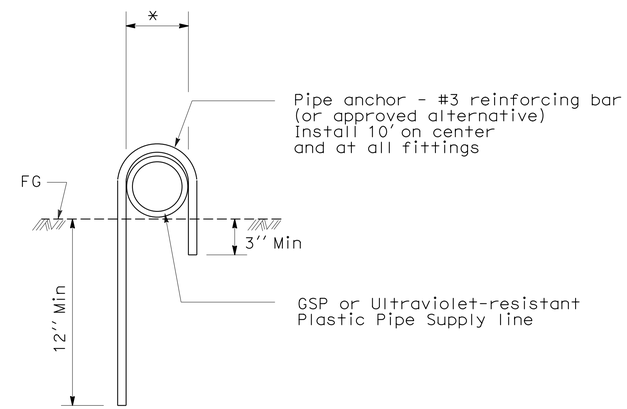

* Equal to 1/4 to 1/2'' greater than outside pipe diameter

ELEVATION

PIPE ON GRADE

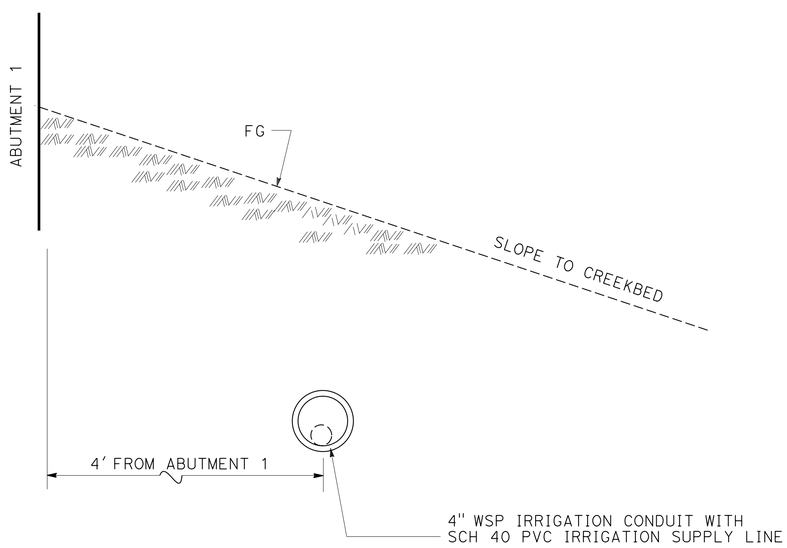

SECTION

IRRIGATION CONDUIT AT ABUTMENT 1
STA "A1" 107+00

LANDSCAPE DETAILS

LD-1

STATE OF CALIFORNIA - DEPARTMENT OF TRANSPORTATION
Caltrans® LANDSCAPE ARCHITECTURE

SENIOR LANDSCAPE ARCHITECT: SUSAN LINDSAY

CALCULATED-DESIGNED BY: MARTIN HOGAN
CHECKED BY: SUSAN LINDSAY

REVISED BY: JRP
DATE REVISED: 4/24/14

LAST REVISION: 00-00-00
DATE PLOTTED => 08-SEP-2014
TIME PLOTTED => 11:03

Dist	COUNTY	ROUTE	POST MILES TOTAL PROJECT	SHEET No.	TOTAL SHEETS
04	Nap	29	47.0-47.2	55	146

LICENSED LANDSCAPE ARCHITECT

PLANS APPROVAL DATE

LICENSED LANDSCAPE ARCHITECT
Name & License No.
Signature
3-31-15
Renewal Date
4-24-14
Date
STATE OF CALIFORNIA

THE STATE OF CALIFORNIA OR ITS OFFICERS OR AGENTS SHALL NOT BE RESPONSIBLE FOR THE ACCURACY OR COMPLETENESS OF SCANNED COPIES OF THIS PLAN SHEET.

PLANT QUANTITIES

TYPE	UNIT	QUANTITY	IRON SULFATE	SOIL AMENDMENT	COMMERCIAL FERTILIZER		BASIN MULCH (N)	STAKES (N)	FOLIAGE PROTECTOR	ROOT PROTECTOR
					PACKET	SLOW RELEASE				
			LB	CY	EA	LB	CY	EA	EA	EA
PLANT (GROUP A)	EA									
PLANT (GROUP B)	EA									
PLANT (GROUP C)	EA									
PLANT (GROUP E)	EA									
PLANT (GROUP F)	EA									
PLANT (GROUP H)	EA									
PLANT (GROUP I)	EA	43	-	1.6	86	2.7	2.9	-	43	-
PLANT (GROUP K)	EA									
PLANT (GROUP M)	EA	43	-	0.4	43	2.7	0.8	-	43	-
PLANT (GROUP O)	EA									
PLANT (GROUP P)	EA									
PLANT (GROUP S)	EA									
PLANT (GROUP U)	EA									
SOD	SQYD									
TRANSPLANT TREE	EA									
TOTAL		86	-	2.0	129	5.4	3.7	-	86	-

(N) - NOT A SEPARATE PAY ITEM, FOR INFORMATION ONLY

LANDSCAPE QUANTITIES

LQ-1

STATE OF CALIFORNIA - DEPARTMENT OF TRANSPORTATION
Caltrans® LANDSCAPE ARCHITECTURE

SENIOR LANDSCAPE ARCHITECT: SUSAN LINDSAY

CALCULATED-DESIGNED BY: MARTY HOGAN
CHECKED BY: SUSAN M. LINDSAY

REVISED BY: MH
DATE REVISED: 4/24/14

LAST REVISION: 00-00-00
DATE PLOTTED => 08-SEP-2014
TIME PLOTTED => 11:03

Dist	COUNTY	ROUTE	POST MILES TOTAL PROJECT	SHEET No.	TOTAL SHEETS
04	Nap	29	47.0/47.2	56	146

Alex McDonald
LICENSED LANDSCAPE ARCHITECT

6-23-14
PLANS APPROVAL DATE

LICENSED LANDSCAPE ARCHITECT ALEXANDER K. MCDONALD No. 5342 STATE OF CALIFORNIA
Alex McDonald
Signature
8-31-14
Renewal Date
6-5-14
Date

THE STATE OF CALIFORNIA OR ITS OFFICERS OR AGENTS SHALL NOT BE RESPONSIBLE FOR THE ACCURACY OR COMPLETENESS OF SCANNED COPIES OF THIS PLAN SHEET.

EROSION CONTROL TYPE 1

SEQUENCE	ITEM	MATERIAL DESCRIPTION	MATERIAL TYPE	APPLICATION RATE	DEPTH	REMARKS
STEP 1	COMPOST	COMPOST	MEDIUM	135 CY/ACRE	1"	
STEP 2	INCORPORATE MATERIALS	COMPOST			2"-4"	
STEP 3	FIBER ROLLS	FIBER ROLL	10 TO 12 INCHES IN Dia			Rice straw filled, jute covered and installation Type 1
STEP 4	HYDROSEED	SEED	MIX 1	59.3 LB/ACRE		
		FIBER	ALTERNATE	1,000 LB/ACRE		
		FERTILIZER	ORGANIC	1,200 LB/ACRE		
STEP 5	HYDROMULCH	FIBER	ALTERNATE	3,000 LB/ACRE		
		TACKIFIER	PSYLLIUM	200 LB/ACRE		

EROSION CONTROL TYPE 2

SEQUENCE	ITEM	MATERIAL DESCRIPTION	MATERIAL TYPE	APPLICATION RATE	DEPTH	REMARKS
STEP 1	COMPOST	COMPOST	MEDIUM	135 CY/ACRE	1"	
STEP 2	INCORPORATE MATERIALS	COMPOST			2"-4"	
STEP 3	ROLLED EROSION CONTROL PRODUCT (NETTING)	NETTING	TYPE A			
STEP 4	FIBER ROLLS	FIBER ROLL	10 TO 12 INCHES IN Dia			Rice straw filled, jute covered and installation Type 2
STEP 5	HYDROSEED	SEED	MIX 1	59.3 LB/ACRE		
		FIBER	ALTERNATE	1,000 LB/ACRE		
		FERTILIZER	ORGANIC	1,200 LB/ACRE		
STEP 6	HYDROMULCH	FIBER	ALTERNATE	3,000 LB/ACRE		
		TACKIFIER	PSYLLIUM	200 LB/ACRE		

EROSION CONTROL TYPE 3

SEQUENCE	ITEM	MATERIAL DESCRIPTION	MATERIAL TYPE	APPLICATION RATE	DEPTH	REMARKS
STEP 1	HYDROSEED	SEED	MIX 2	59 LB/ACRE		
		FIBER	ALTERNATE	1,000 LB/ACRE		
		FERTILIZER	ORGANIC	1,200 LB/ACRE		
STEP 2	COMPOST	COMPOST	COARSE	135 CY/ACRE	1"	
STEP 3	HYDROMULCH	FIBER	ALTERNATE	1,000 LB/ACRE		
		TACKIFIER	PSYLLIUM	200 LB/ACRE		

SEED MIX

SEED	BOTANICAL NAME (COMMON NAME)	PERCENT GERMINATION (MINIMUM)	POUNDS PURE LIVE SEED PER ACRE (SLOPE MEASUREMENT)
MIX 1	ACHILLEA MILLEFOLIUM (WESTERN YARROW)	55	1
	BROMUS CARINATUS [1] (CALIFORNIA BROME)	70	10
	ELYMUS ELYMOIDES [1] (SQUIRRELTAIL)	40	7
	ERIOPHYLLUM CONFERTIFLORUM (GOLDEN YARROW)	45	0.3
	HORDEUM BRACHYANTHERUM (MEADOW BARLEY)	50	6
	LOTUS SCOPARIUS (DEER LOTUS)	50	6
	NASSELLA PULCHRA (PURPLE NEEDLEGRASS)	50	12
	RHAMNUS CALIFORNICA (CALIFORNIA COFFEEBERRY)	40	1
	TRIFOLIUM TRIDENTATUM (TOMCAT CLOVER)	50	4
	VULPIA MICROSTACHYS (THREE WEEKS FESCUE)	50	12
MIX 2	ACHILLEA MILLEFOLIUM (WESTERN YARROW)	55	1
	AGROSTIS DIEGOENSIS (THINGRASS)	45	5
	CAREX PRAEGRACILIS (SLENDER SEDGE)	30	3
	DESCHAMPSIA ELONGATA (SLENDER HAIRGRASS)	50	3
	HORDEUM BRACHYANTHERUM (MEADOW BARLEY)	50	12
	JUNCUS BUFONIUS (TOAD RUSH)	40	1
	LOTUS SCOPARIUS (DEER LOTUS)	50	6
	TRIFOLIUM TRIDENTATUM (TOMCAT CLOVER)	50	4
	VULPIA MICROSTACHYS (THREE WEEKS FESCUE)	50	24

[1] SEED SOURCE FROM CALIFORNIA ONLY.

EROSION CONTROL LEGEND

NO SCALE

ECL-1

STATE OF CALIFORNIA - DEPARTMENT OF TRANSPORTATION
Caltrans®
WATER QUALITY

SENIOR LANDSCAPE ARCHITECT: DAVID W. YAM
CALCULATED-DESIGNED BY: Alex McDonald
CHECKED BY: Chris Padick
REVISED BY: AKM
DATE REVISED: 1/28/14

LAST REVISION 08-30-13
DATE PLOTTED => 08-SEP-2014
TIME PLOTTED => 11:03

Dist	COUNTY	ROUTE	POST MILES TOTAL PROJECT	SHEET No.	TOTAL SHEETS
04	Nap	29	47.0/47.2	57	146

Alex McDonald
LICENSED LANDSCAPE ARCHITECT

6-23-14
PLANS APPROVAL DATE

LICENSED LANDSCAPE ARCHITECT
ALEXANDER K. I. McDONALD No. 5342
Alex McDonald
Signature
8-31-14
Renewal Date
6-5-14
Date
STATE OF CALIFORNIA

THE STATE OF CALIFORNIA OR ITS OFFICERS OR AGENTS SHALL NOT BE RESPONSIBLE FOR THE ACCURACY OR COMPLETENESS OF SCANNED COPIES OF THIS PLAN SHEET.

NOTE:

FOR ACCURATE RIGHT OF WAY DATA, CONTACT RIGHT OF WAY ENGINEERING AT THE DISTRICT OFFICE.

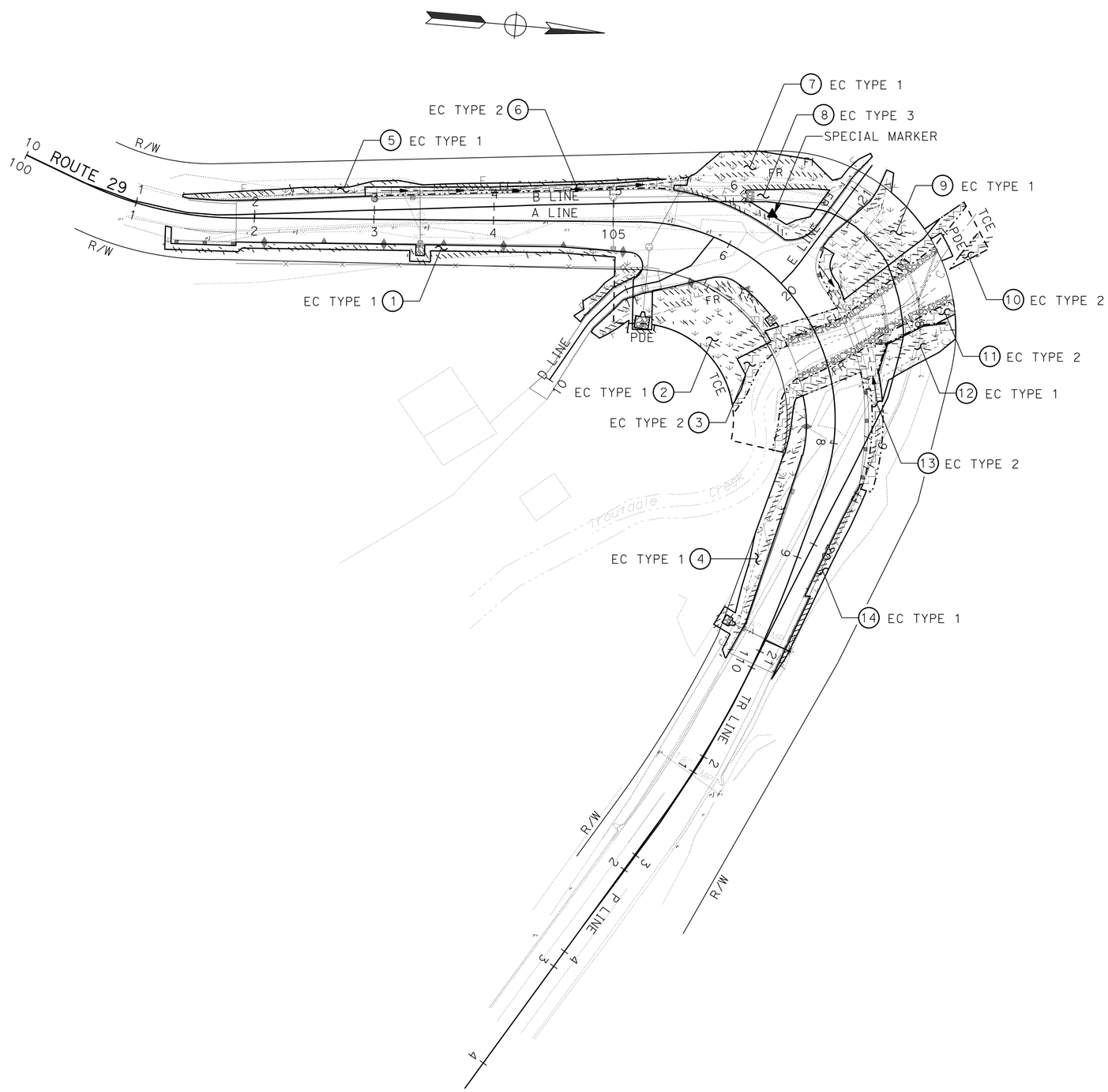

NOTES:

1. FOR ROLLED EROSION CONTROL PRODUCT (NETTING) IN DITCH INSTALLATION DETAILS, SEE PLAN DETAILS FOR TEMPORARY EROSION CONTROL BLANKET OF SIMILAR CHARACTER AS PROVIDED IN PLATE T55 OF THE STANDARD PLANS.
2. EROSION CONTROL WORK IS DIAGRAMMATIC. ADAPT TO MEET FIELD CONDITIONS AS DIRECTED BY THE ENGINEER.

LEGEND:

- EROSION CONTROL TYPE 1 — DISTURBED SOIL AREAS
- EROSION CONTROL TYPE 2 — RECP (NETTING) AREAS
- EROSION CONTROL TYPE 3 — BIOSWALE (BIORETENTION)
- ▲ SPECIAL MARKER
- (#) EROSION CONTROL LOCATION NUMBER

EROSION CONTROL PLAN

SCALE: 1" = 50'

EC-1

REVISED BY	AKM
DATE REVISED	1/28/14
CALCULATED-DESIGNED BY	Alex McDonald
CHECKED BY	Chris Padick
SENIOR LANDSCAPE ARCHITECT	DAVID W. YAM

STATE OF CALIFORNIA - DEPARTMENT OF TRANSPORTATION
Caltrans®
WATER QUALITY

LAST REVISION 08-30-13
DATE PLOTTED => 08-SEP-2014
TIME PLOTTED => 11:03

Dist	COUNTY	ROUTE	POST MILES TOTAL PROJECT	SHEET No.	TOTAL SHEETS
04	Nap	29	47.0/47.2	58	146

Alex McDonald
LICENSED LANDSCAPE ARCHITECT

PLANS APPROVAL DATE

LICENSED LANDSCAPE ARCHITECT
ALEXANDER K. J. MCDONALD No. 5342
Alex McDonald
Signature
8-31-14
Renewal Date
6-5-14
Date
STATE OF CALIFORNIA

THE STATE OF CALIFORNIA OR ITS OFFICERS OR AGENTS SHALL NOT BE RESPONSIBLE FOR THE ACCURACY OR COMPLETENESS OF SCANNED COPIES OF THIS PLAN SHEET.

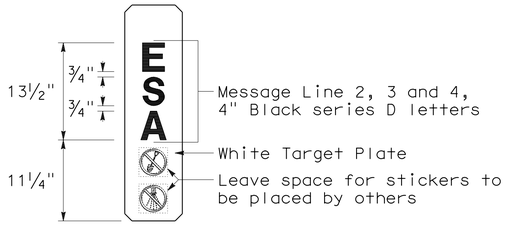

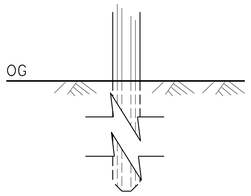

SECTION

SPECIAL MARKER

See Highway POST MARKER on Std Plans A73B for informations not shown

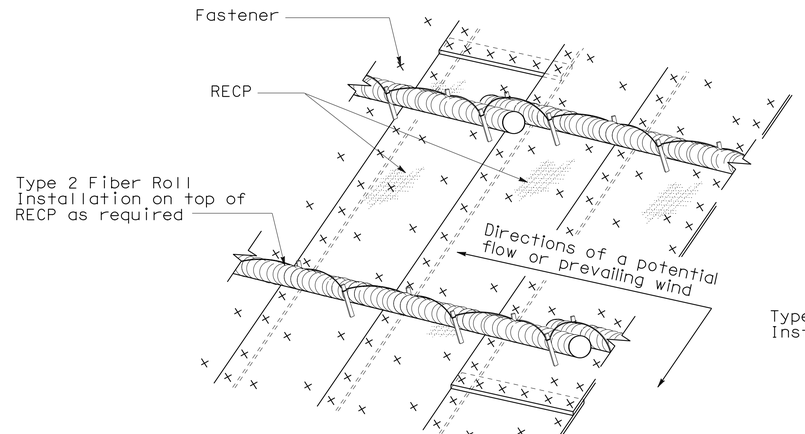

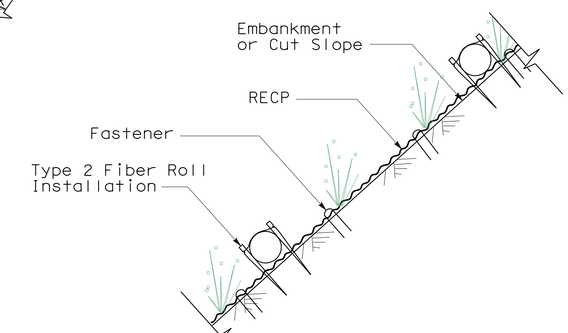

ISOMETRIC

SECTION

ROLLED EROSION CONTROL PRODUCT ON SLOPE WITH FIBER ROLLS

See Std Plan H51 and H52 for additional details

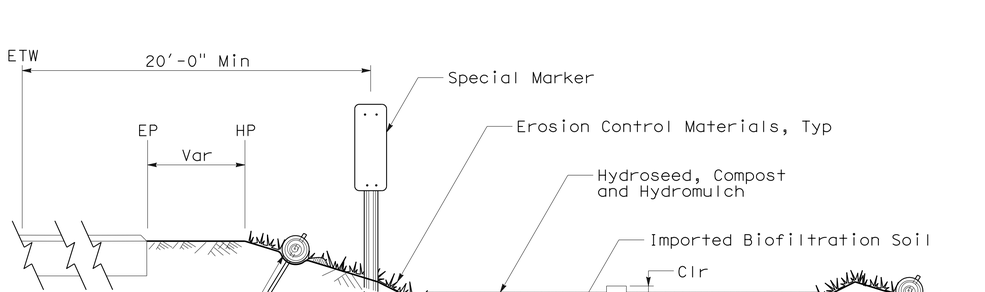

SECTION

BIOSWALE (BIORETENTION), (EROSION CONTROL TYPE 3)

(See Drainage Sheets for Bioswale Details)

EROSION CONTROL DETAILS

NO SCALE

ECD-1

STATE OF CALIFORNIA - DEPARTMENT OF TRANSPORTATION
Caltrans®
WATER QUALITY

SENIOR LANDSCAPE ARCHITECT: DAVID W. YAM

CALCULATED-DESIGNED BY: Alex McDonald
CHECKED BY: Chris Padick

REVISED BY: AKM
DATE REVISED: 1/28/14

LAST REVISION: 08-30-13
DATE PLOTTED => 08-SEP-2014
TIME PLOTTED => 11:03

Dist	COUNTY	ROUTE	POST MILES TOTAL PROJECT	SHEET No.	TOTAL SHEETS
04	Nap	29	47.0/47.2	59	146

Alex McDonald
LICENSED LANDSCAPE ARCHITECT

6-23-14
PLANS APPROVAL DATE

LICENSED LANDSCAPE ARCHITECT
ALEXANDER K. J. MCDONALD No. 5342
Alex McDonald
Signature
8-31-14
Renewal Date
6-5-14
Date
STATE OF CALIFORNIA

THE STATE OF CALIFORNIA OR ITS OFFICERS OR AGENTS SHALL NOT BE RESPONSIBLE FOR THE ACCURACY OR COMPLETENESS OF SCANNED COPIES OF THIS PLAN SHEET.

EROSION CONTROL QUANTITIES

SHEET	EROSION CONTROL LOCATION NUMBER	DESCRIPTION	ROLLED EROSION CONTROL PRODUCT (NETTING)	HYDROMULCH	FIBER ROLLS	HYDROSEED	COMPOST	INCORPORATE MATERIALS
			SQFT	SQFT	LF	SQFT	SQFT	SQFT
EC-1	1	ERC TYPE 1	-	3,205	533	3,205	3,205	3,205
	2	ERC TYPE 1	-	7,021	607	7,021	7,021	7,021
	3	ERC TYPE 2	3,567	3,567	331	3,567	3,567	3,567
	4	ERC TYPE 1	-	3,418	332	3,418	3,418	3,418
	5	ERC TYPE 1	-	2,065	410	2,065	2,065	2,065
	6	ERC TYPE 2	1,682	1,682	-	1,682	1,682	1,682
	7	ERC TYPE 1	-	5,244	572	5,244	5,244	5,244
	8	ERC TYPE 3	-	1,293	-	1,293	1,293	-
	9	ERC TYPE 1	-	4,484	340	4,484	4,484	4,484
	10	ERC TYPE 2	352	352	58	352	352	352
	11	ERC TYPE 2	642	642	111	642	642	642
	12	ERC TYPE 1	-	1,929	127	1,929	1,929	1,929
	13	ERC TYPE 2	3,134	3,134	270	3,134	3,134	3,134
	14	ERC TYPE 1	-	1,181	179	1,181	1,181	1,181
TOTAL			9,377	39,217	3,870	39,217	39,217	37,924

SPECIAL MARKER

SHEET No.	STATION	LOCATION	SIGN CODE	LINE 1 MESSAGE	LINE 2, 3 & 4 MESSAGE	PANEL SIZE	No. OF POSTS & TYPE (N)	QUANTITY
								EA
EC-1	A 106+16	Lt	G11-10 (CA)	N/A	ESA	8" x 30"	1 - METAL POST	1
TOTAL								1

(N) - NOT A SEPARATE PAY ITEM, FOR INFORMATION ONLY
"N/A" DENOTES NO LINE 1 MESSAGE FOR THIS SIGN

STATE OF CALIFORNIA - DEPARTMENT OF TRANSPORTATION
Caltrans®
WATER QUALITY

SENIOR LANDSCAPE ARCHITECT: DAVID W. YAM
CALCULATED-DESIGNED BY: Alex McDonald
CHECKED BY: Chris Padick
REVISED BY: AKM
DATE REVISED: 1/28/14

EROSION CONTROL QUANTITIES
ECQ-1

LAST REVISION 08-30-13
DATE PLOTTED => 08-SEP-2014
TIME PLOTTED => 11:03

Dist	COUNTY	ROUTE	POST MILES TOTAL PROJECT	SHEET No.	TOTAL SHEETS
04	Nap	29	47.0/47.2	60	168

REGISTERED ELECTRICAL ENGINEER 4/24/14 DATE

6-23-14
PLANS APPROVAL DATE

REGISTERED PROFESSIONAL ENGINEER Nasrin Gharib No. 17498 Exp. 6-30-15 ELECT STATE OF CALIFORNIA

THE STATE OF CALIFORNIA OR ITS OFFICERS OR AGENTS SHALL NOT BE RESPONSIBLE FOR THE ACCURACY OR COMPLETENESS OF SCANNED COPIES OF THIS PLAN SHEET.

ELECTRICAL INDEX

E-1	INDEX, NOTES, LEGEND, SYMBOLS, AND ABBREVIATIONS
E-2	TEMPORY SIGNAL SYSTEM
E-3 TO E-4	ELECTRICAL DETAILS
E-5	ELECTRICAL QUANTITIES

GENERAL NOTES:

1. THE LOWEST SAG POINT OF THE MESSENGER WIRE SHALL BE 25′ MINIMUM CLEARANCE FROM FINISHED GRADE/ROADWAY.
2. OVERHEAD ENTRANCE CONDUIT FITTING SHALL BE INSTALLED IN SUCH A WAY SO THAT RAINWATER SHALL NOT SEEP INTO THE ELECTRICAL EQUIPMENT THROUGH THE ENTRANCE FITTING. FORM A DRIP LOOP AT THE ENTRANCE FITTING.
3. PROVIDE GUY WIRE, GUY GUARDS AND ANCHOR AS REQUIRED POLE GUY SHALL BE INSTALLED AS DIRECTED BY THE ENGINEER.
4. ESTABLISH CONTINUOUS GROUND WITH THE SYSTEM GROUND TO ALL METAL PARTS IN THE SYSTEM BY BONDING JUMPERS AND CONDUITS.
5. THE SIGNS SHOWN ARE "CONSTRUCTION AREA SIGNS". SEE PLAN SHEET CS-1.
6. A GROUND ROD SHALL BE INSTALLED IN THE PULL BOX ADJACENT TO WOOD POLES AND BOND TO RIGID METAL CONDUIT, UNLESS OTHERWISE NOTED.
7. WHERE ONE OR MORE TRAFFIC SIGNAL DETECTOR(S) CONSIST OF A SEQUENCE OF 4 LOOPS IN A SINGLE LANE, THE FRONT LOOP CLOSET TO THE LIMIT LINE OR CROSSWALK SHALL BE LOCATED 1′ FROM THE LINE. ALL FOUR LOOPS SHALL BE CONNECTED IN SERIES.
8. THE TWO GENERATORS SHALL BE FROM THE SAME MANUFACTURER. THE SECOND GENERATOR SHALL BE PROVIDED WITH AN AUTOMATIC TRANSFER SWITCH. GENERATORS SHALL BE PLACED IN AN ENCLOSURE FOR OUTDOOR USE.
9. REFER TO SES SHEETS FOR TEMPORARY WOOD POLE DETAILS.

LEGEND, SYMBOLS AND ABBREVIATIONS:

PROPOSED

	TEMPORARY ELECTROLIER WITH 200 W HPS LUMINAIRE MOUNTED ON A WOOD POLE. SEE DETAIL 4 ON E-3.
Y Y	ADVANCE FLASHING BEACON WITH A W3-3 SIGN AND SIGN LIGHTING MOUNTED ON A WOOD POLE SEE DETAIL 2 ON E-3.
	TEMPORARY SIGNAL STANDARD MOUNTED ON A WOOD POLE SEE DETAIL 3 ON E-3.
FUEL	FUEL TANK
—×———×—	TEMPORARY FENCE AND GATE
— F —	FUEL LINE
G	GENERATOR WITH BACK-UP GENERATOR
OH	7 STRAND GALVANIZED MESSENGER WIRE, CONDUCTORS AS NOTED UNLESS OTHERWISE SPECIFIED
UPS	UNINTERRUPTABLE POWER SUPPLY

PROJECT NOTES:

1. 7′ x 11′x 4" (W x L x D) CONCRETE SLAB FOR PORTABLE GENERATORS AND SERVICE EQUIPMENT ENCLOSURE MOUNTING. SEE DETAIL 4 ON E-3.
2. STATE-FURNISHED MODEL 2070 CONTROLLER ASSEMBLY WITH MODEL 332 CABINET. SEE TEMPORARY FOUNDATION PLATFORM DETAIL 5 ON E-3. FRONT DOOR SHALL FACE SOUTH. INSTALL UPS IN CONTROLLER CABINET.
3. 4′ TEMPORARY GATE (TYPE CL-6) 40′ TEMPORARY FENCE (TYPE CL-6) PART OF ROADWAY PAY ITEM.
4. 6′(LONG) x 3′(Dia) FUEL STORAGE
5. THE EXACT LOCATION TO BE DETERMINED BY THE ENGINEER.
6. INSTALL NEMA 3R SERVICE ENCLOSURE ON WOOD POST. SEE DETAIL 7 AND 11 ON E-4.

ELECTRICAL INDEX, NOTES, LEGEND, SYMBOLS AND ABBREVIATIONS

E-1

NASRIN GHARIB	NG	REVISED BY	
ELAINE WONG	4/24/14	DATE REVISED	
CALCULATED-DESIGNED BY			
CHECKED BY			
FUNCTIONAL SUPERVISOR			
BEHZAD GOLEMOHAMMADI			

STATE OF CALIFORNIA - DEPARTMENT OF TRANSPORTATION
Caltrans
ELECTRICAL

LAST REVISION 01-31-14 DATE PLOTTED => 08-SEP-2014 TIME PLOTTED => 11:03

Dist	COUNTY	ROUTE	POST MILES TOTAL PROJECT	SHEET No.	TOTAL SHEETS
04	Nap	29	47.0/47.2	61	146

REGISTERED ELECTRICAL ENGINEER — DATE: 4/24/14

PLANS APPROVAL DATE: 6-23-14

REGISTERED PROFESSIONAL ENGINEER — Nasrin Gharib — No. 17498 — Exp. 6-30-15 — ELECT — STATE OF CALIFORNIA

THE STATE OF CALIFORNIA OR ITS OFFICERS OR AGENTS SHALL NOT BE RESPONSIBLE FOR THE ACCURACY OR COMPLETENESS OF SCANNED COPIES OF THIS PLAN SHEET.

NOTE:

FOR ACCURATE RIGHT OF WAY DATA, CONTACT RIGHT OF WAY ENGINEERING AT THE DISTRICT OFFICE.

PHASE DIAGRAM

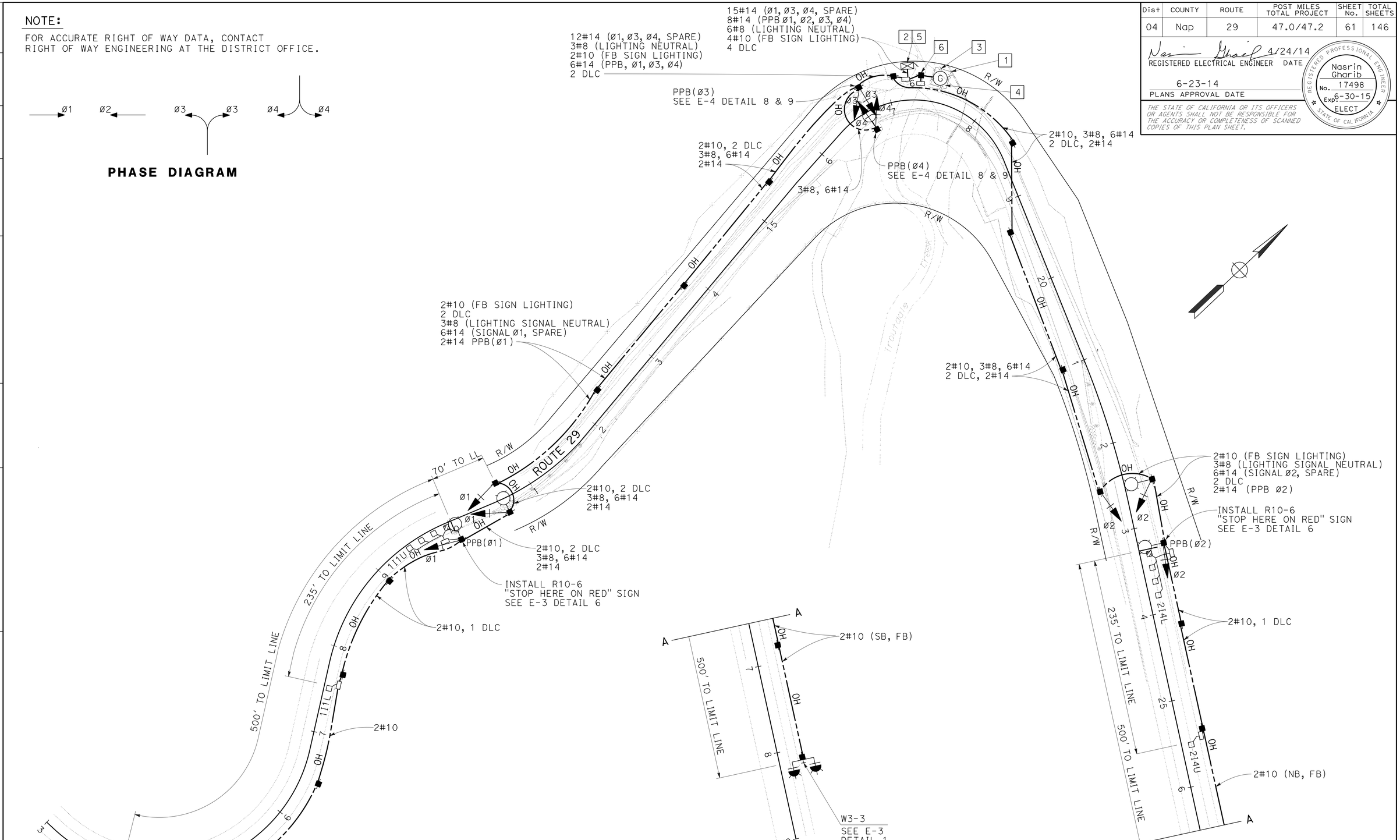

TEMPORARY SIGNAL SYSTEM

SCALE: 1" = 50'

APPROVED FOR ELECTRICAL WORK ONLY

FOR NOTES, ABBREVIATIONS AND LEGEND, SEE SHEET E-1

E-2

NASRIN GHARIB	REVISED BY: NG
ELAINE WONG	DATE REVISED: 4/24/14
CALCULATED-DESIGNED BY	
CHECKED BY	
FUNCTIONAL SUPERVISOR: BEHZAD GOLEMOHAMMADI	

STATE OF CALIFORNIA - DEPARTMENT OF TRANSPORTATION

Caltrans

ELECTRICAL

LAST REVISION: 02-12-14

DATE PLOTTED => 08-SEP-2014

TIME PLOTTED => 11:03

Dist	COUNTY	ROUTE	POST MILES TOTAL PROJECT	SHEET No.	TOTAL SHEETS
04	Nap	29	47.0/47.2	62	146

REGISTERED ELECTRICAL ENGINEER 4/24/14 DATE

6-23-14
PLANS APPROVAL DATE

REGISTERED PROFESSIONAL ENGINEER Nasrin Gharib No. 17498 Exp. 6-30-15 ELECT STATE OF CALIFORNIA

THE STATE OF CALIFORNIA OR ITS OFFICERS OR AGENTS SHALL NOT BE RESPONSIBLE FOR THE ACCURACY OR COMPLETENESS OF SCANNED COPIES OF THIS PLAN SHEET.

NOTE:
REFER TO SES SHEETS FOR STRUCTURAL DETAILS.

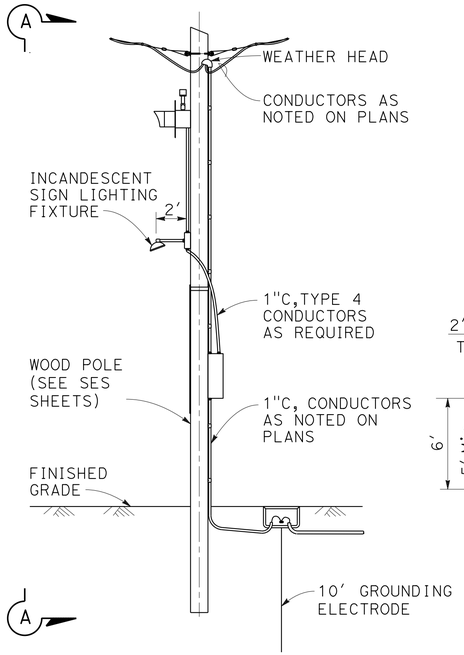

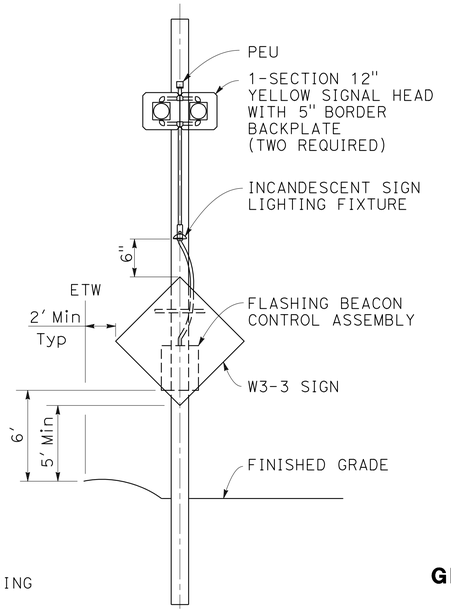

SECTION A-A

TEMPORARY FLASHING BEACON INSTALLATION
DETAIL 1

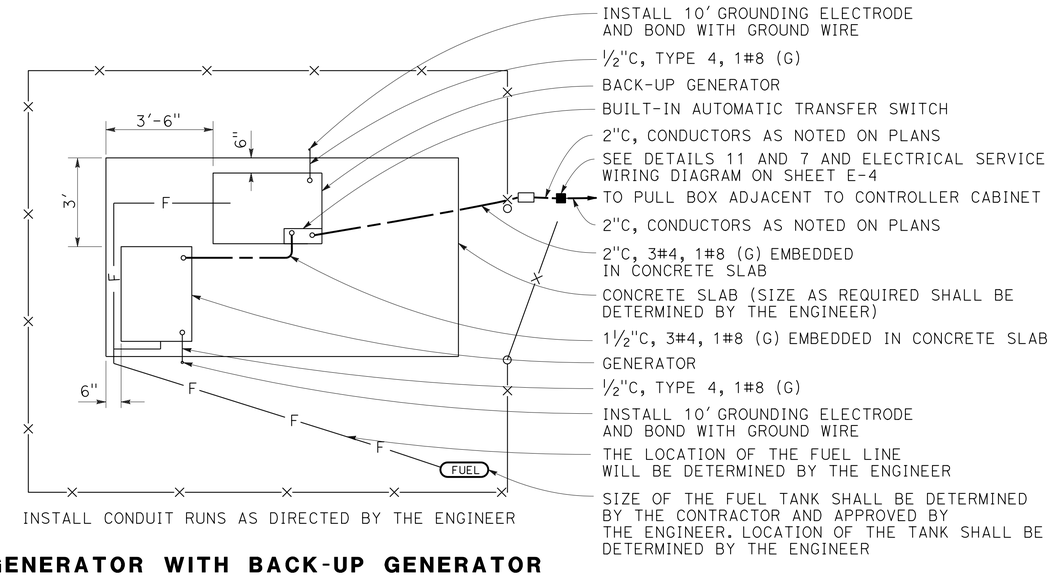

GENERATOR WITH BACK-UP GENERATOR
DETAIL 4

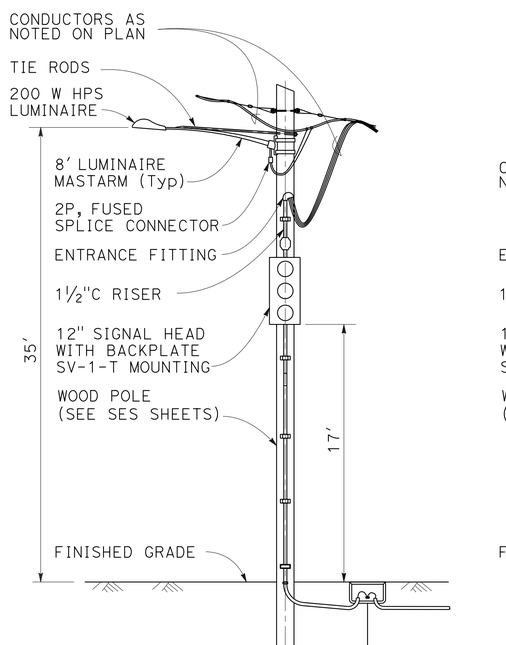

TEMPORARY SIGNAL & LIGHTING INSTALLATION
DETAIL 2

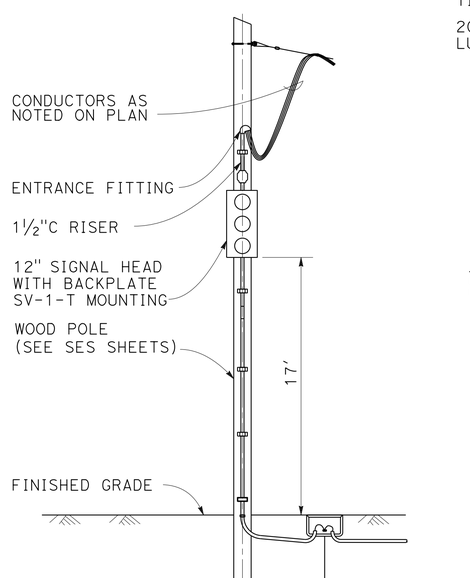

DETAIL 3

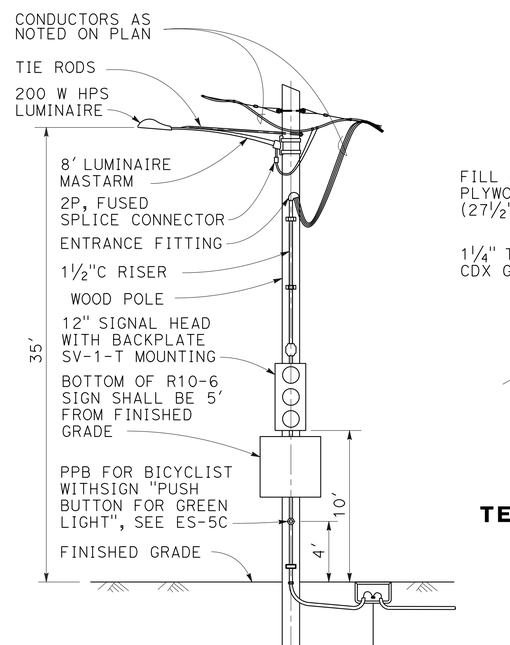

TEMPORARY SIGNAL INSTALLATION
DETAIL 6

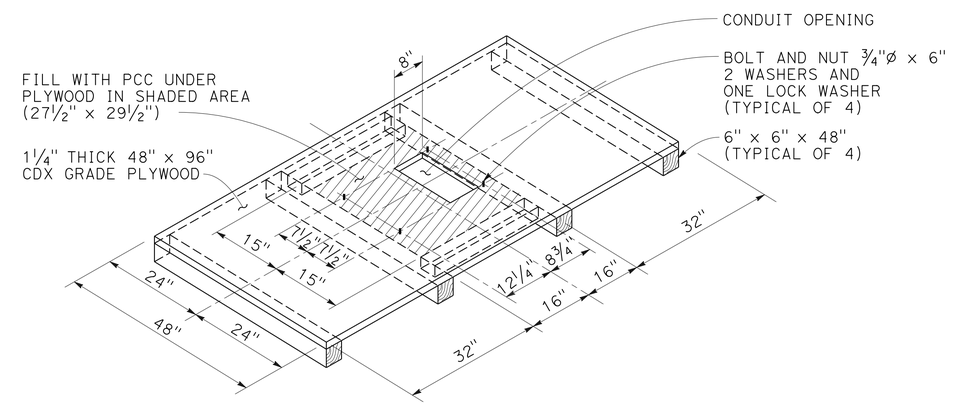

TEMPORARY MODEL 332 CABINET FOUNDATION PLATFORM
DETAIL 5

ELECTRICAL DETAILS
NO SCALE

E-3

NASRIN GHARIB — ELAINE WONG — NG — 4/24/14
REVISED BY — DATE REVISED
CALCULATED-DESIGNED BY — CHECKED BY
FUNCTIONAL SUPERVISOR — BEHZAD GOLEMOHAMMADI
STATE OF CALIFORNIA - DEPARTMENT OF TRANSPORTATION — Caltrans — ELECTRICAL

LAST REVISION 01-31-14 — DATE PLOTTED => 08-SEP-2014 — TIME PLOTTED => 11:03

Dist	COUNTY	ROUTE	POST MILES TOTAL PROJECT	SHEET No.	TOTAL SHEETS
04	Nap	29	47.0/47.2	63	146

REGISTERED ELECTRICAL ENGINEER 4/24/14 DATE

6-23-14
PLANS APPROVAL DATE

REGISTERED PROFESSIONAL ENGINEER Nasrin Gharib No. 17498 Exp. 6-30-15 ELECT STATE OF CALIFORNIA

THE STATE OF CALIFORNIA OR ITS OFFICERS OR AGENTS SHALL NOT BE RESPONSIBLE FOR THE ACCURACY OR COMPLETENESS OF SCANNED COPIES OF THIS PLAN SHEET.

NOTE:
REFER TO SES SHEETS FOR STRUCTURAL DETAILS.

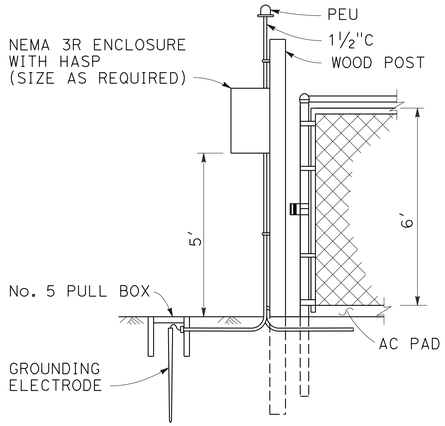

ELECTRICAL SERVICE SIDE VIEW
DETAIL 11

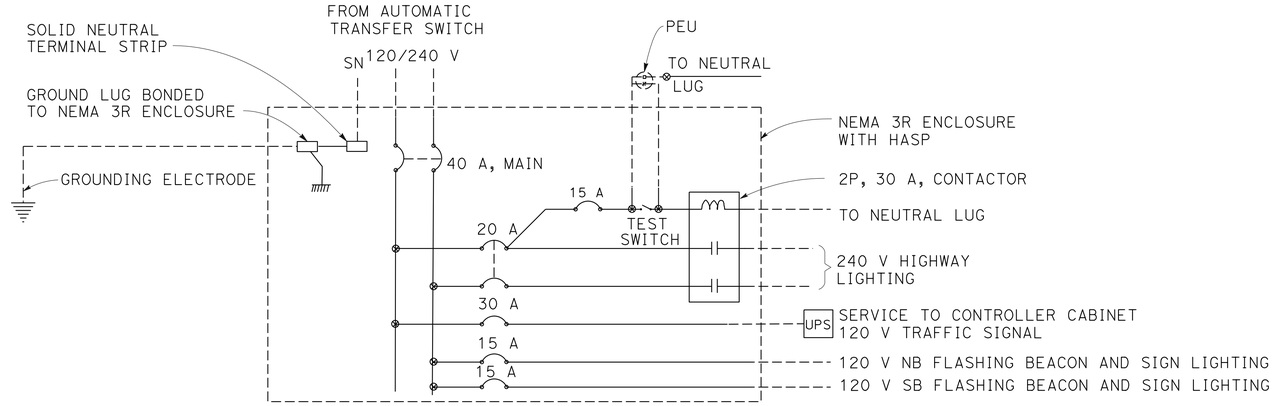

PROVIDE ITEMS SHOWN IN THIS DIAGRAM
SEE REVISED STANDARD PLANS ES-2C AND ES-2D FOR MORE INFORMATION

ELECTRICAL SERVICE WIRING DIAGRAM

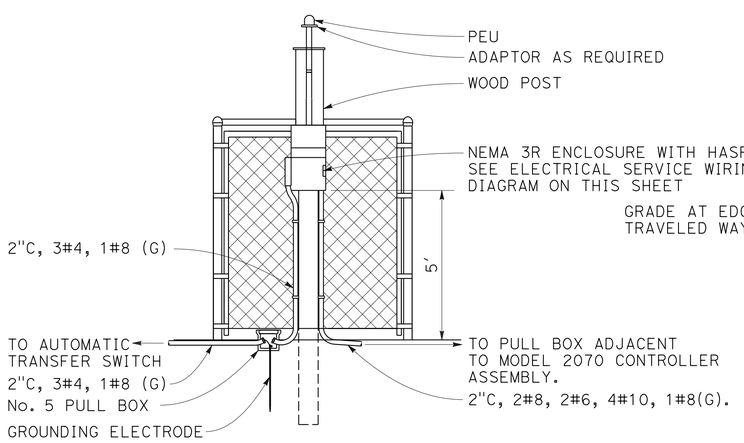

ELECTRICAL SERVICE FRONT VIEW
DETAIL 7

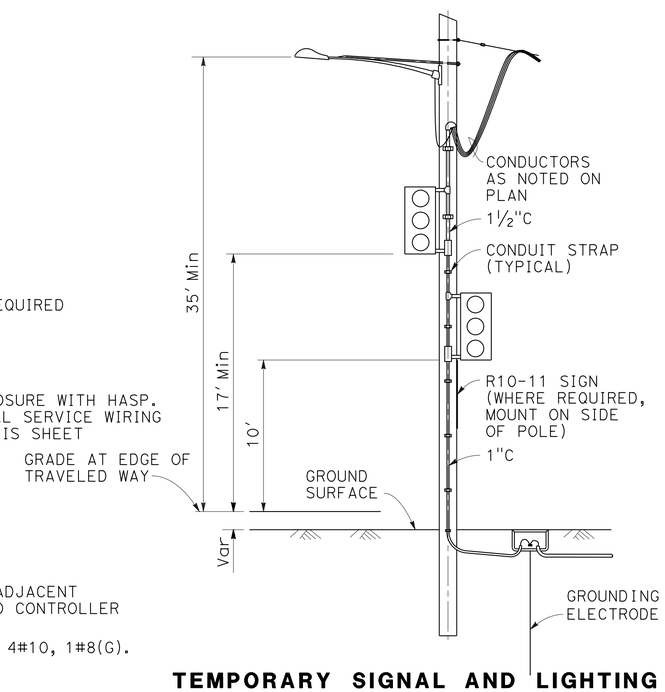

TEMPORARY SIGNAL AND LIGHTING INSTALLATION ON WOOD POLE
DETAIL 8

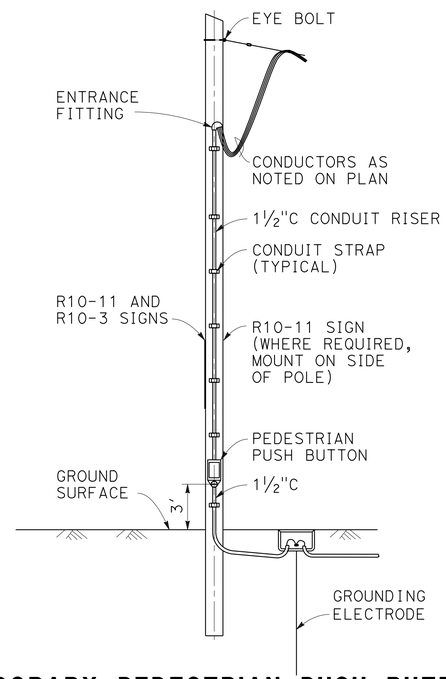

TEMPORARY PEDESTRIAN PUSH BUTTON INSTALLATION ON WOOD POLE
DETAIL 9

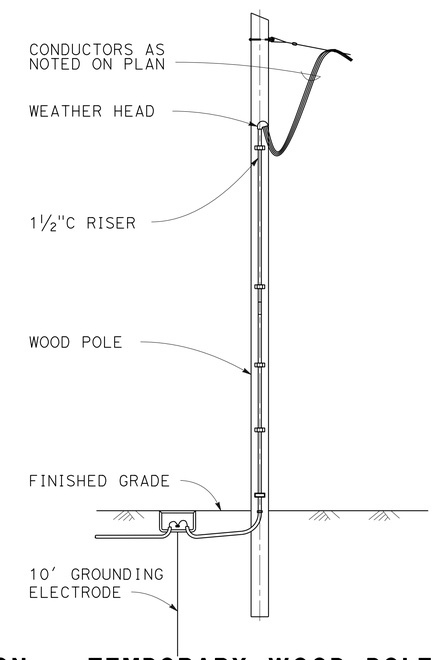

TEMPORARY WOOD POLE INSTALLATION
DETAIL 10

ELECTRICAL DETAILS
NO SCALE

E-4

REVISED BY	DATE REVISED
NG	4/24/14

NASRIN GHARIB — ELAINE WONG — CALCULATED-DESIGNED BY — CHECKED BY
FUNCTIONAL SUPERVISOR: BEHZAD GOLEMOHAMMADI

STATE OF CALIFORNIA - DEPARTMENT OF TRANSPORTATION
ELECTRICAL
Caltrans

LAST REVISION 02-11-14 | DATE PLOTTED => 08-SEP-2014 | TIME PLOTTED => 11:03

Dist	COUNTY	ROUTE	POST MILES TOTAL PROJECT	SHEET No.	TOTAL SHEETS
04	Nap	29	47.0/47.2	64	146

Nasrin Gharib 4/24/14
REGISTERED ELECTRICAL ENGINEER DATE

6-23-14
PLANS APPROVAL DATE

REGISTERED PROFESSIONAL ENGINEER
Nasrin Gharib
No. 17498
Exp. 6-30-15
ELECT
STATE OF CALIFORNIA

THE STATE OF CALIFORNIA OR ITS OFFICERS OR AGENTS SHALL NOT BE RESPONSIBLE FOR THE ACCURACY OR COMPLETENESS OF SCANNED COPIES OF THIS PLAN SHEET.

TEMPORARY SIGNAL SYSTEM (N)

(SHEET No. E-2)

ITEM	QUANTITY
1-SECTION 12" YELLOW SIGNAL HEAD WITH 5" BORDER BACKPLATE	4
8" LUMINAIRE MASTARM	9
WOOD POLE	5
TYPE A LOOP DETECTOR	25
TYPE D LOOP DETECTOR	8
No. 5 PULL BOX	5
No. 6 PULL BOX	1
GENERATOR	2

(N) THE QUANTITIES ON THIS SHEET ARE NOT A SEPARATE BID ITEM AND ARE FOR INFORMATION ONLY.

ELECTRICAL QUANTITIES

E-5

STATE OF CALIFORNIA - DEPARTMENT OF TRANSPORTATION
Caltrans
ELECTRICAL

FUNCTIONAL SUPERVISOR: BEHZAD GOLEMOHAMMADI
CALCULATED-DESIGNED BY: NASRIN GHARIB
CHECKED BY: ELAINE WONG
REVISED BY: NG
DATE REVISED: 4/24/14

LAST REVISION 01-31-14
DATE PLOTTED => 08-SEP-2014
TIME PLOTTED => 11:03

Dist	COUNTY	ROUTE	POST MILES TOTAL PROJECT	SHEET No.	TOTAL SHEETS
04	Nap	29	47.0/47.2	65	146

REGISTERED CIVIL ENGINEER

April 20, 2012
PLANS APPROVAL DATE

REGISTERED PROFESSIONAL ENGINEER
Roberta L. McLaughlin
No. C40375
Exp. 3-31-13
CIVIL
STATE OF CALIFORNIA

THE STATE OF CALIFORNIA OR ITS OFFICERS OR AGENTS SHALL NOT BE RESPONSIBLE FOR THE ACCURACY OR COMPLETENESS OF SCANNED COPIES OF THIS PLAN SHEET.

TO ACCOMPANY PLANS DATED 6-23-14

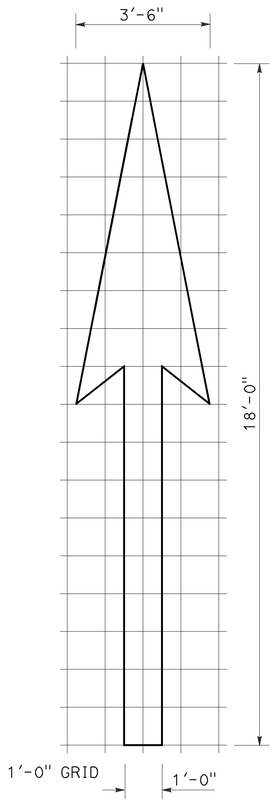

A=25 ft^2

TYPE I 18'-0" ARROW

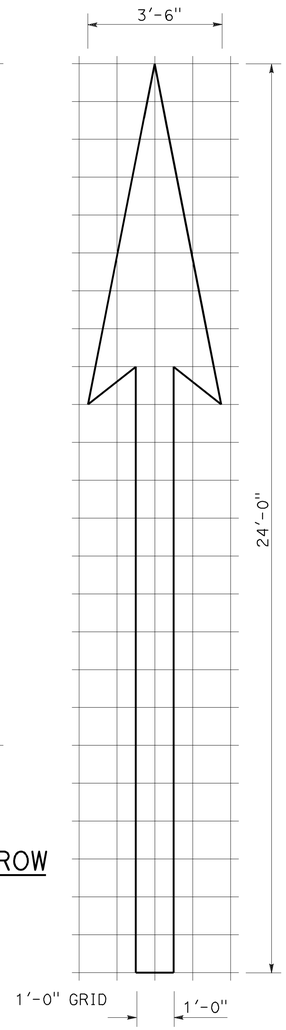

A=31 ft^2

TYPE I 24'-0" ARROW

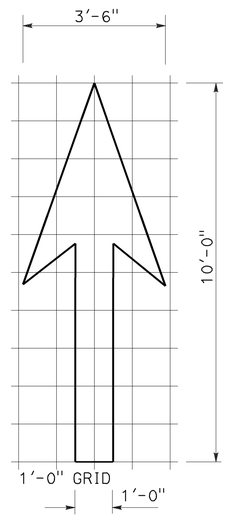

A=14 ft^2

TYPE I 10'-0" ARROW

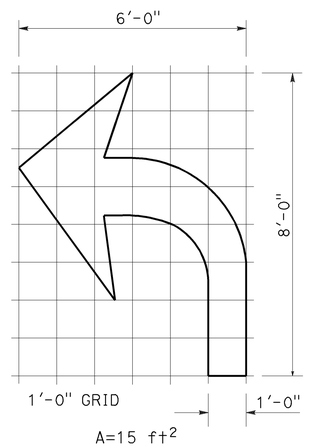

A=15 ft^2

TYPE IV (L) ARROW

(For Type IV (R) arrow, use mirror image)

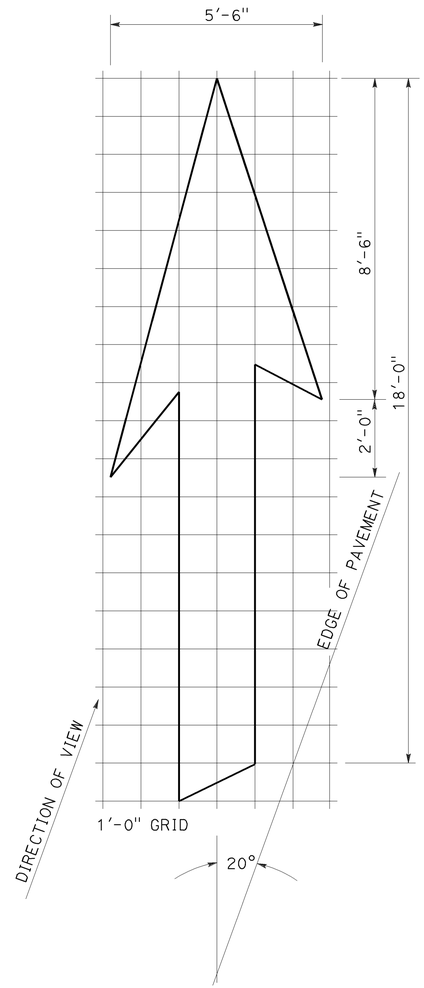

A=42 ft^2

TYPE VI ARROW

Right lane drop arrow
(For left lane, use mirror image)

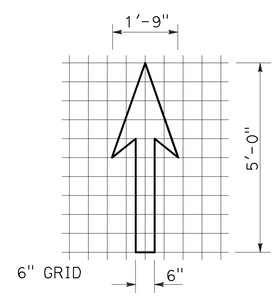

A=3.5 ft^2

BIKE LANE ARROW

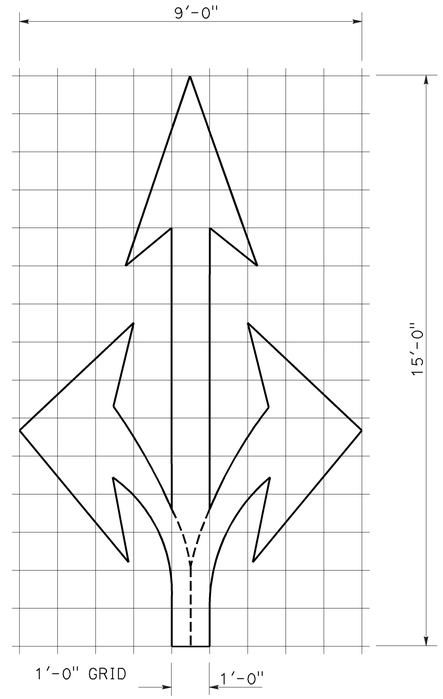

A=36 ft^2

TYPE VIII ARROW

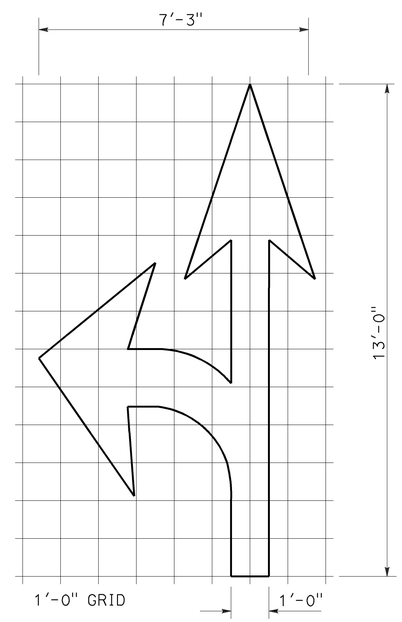

A=27 ft^2

TYPE VII (L) ARROW

(For Type VII (R) arrow, use mirror image)

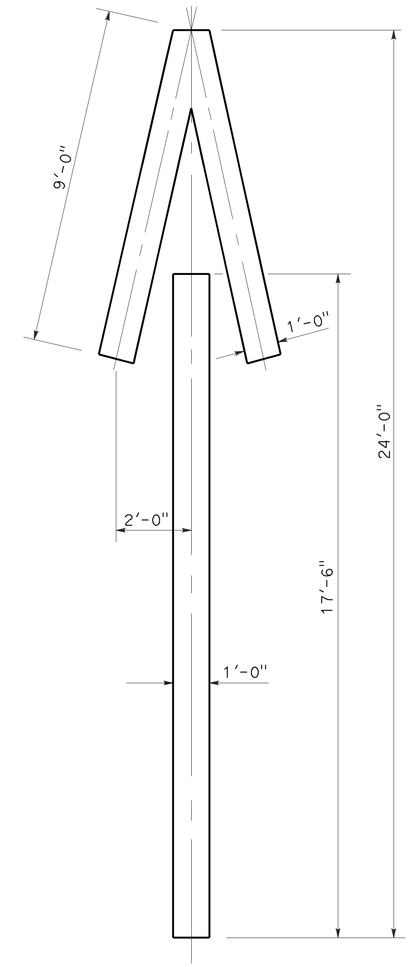

A=33 ft^2

TYPE V ARROW

NOTE:
Minor variations in dimensions may be accepted by the Engineer.

STATE OF CALIFORNIA
DEPARTMENT OF TRANSPORTATION

PAVEMENT MARKINGS ARROWS

NO SCALE

RSP A24A DATED APRIL 20, 2012 SUPERSEDES STANDARD PLAN A24A DATED MAY 20, 2011 - PAGE 13 OF THE STANDARD PLANS BOOK DATED 2010.

REVISED STANDARD PLAN RSP A24A

2010 REVISED STANDARD PLAN RSP A24A

3-14-12

Dist	COUNTY	ROUTE	POST MILES TOTAL PROJECT	SHEET No.	TOTAL SHEETS
04	Nap	29	47.0/47.2	66	146

REGISTERED CIVIL ENGINEER

July 20, 2012
PLANS APPROVAL DATE

REGISTERED PROFESSIONAL ENGINEER
Roberta L. McLaughlin
No. C40375
Exp. 3-31-13
CIVIL
STATE OF CALIFORNIA

THE STATE OF CALIFORNIA OR ITS OFFICERS OR AGENTS SHALL NOT BE RESPONSIBLE FOR THE ACCURACY OR COMPLETENESS OF SCANNED COPIES OF THIS PLAN SHEET.

TO ACCOMPANY PLANS DATED 6-23-14

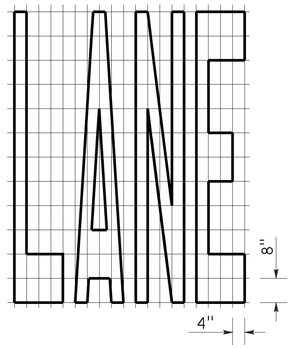

A=24 ft^2

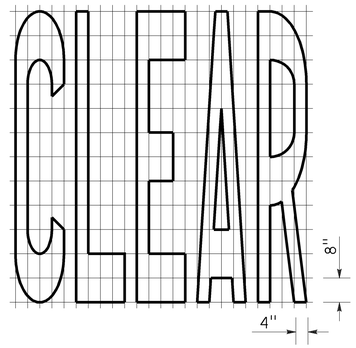

A=27 ft^2

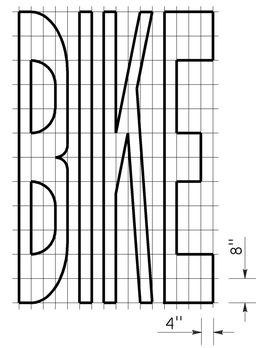

A=21 ft^2

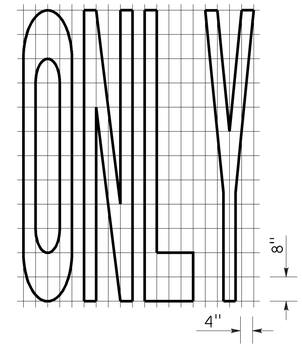

A=22 ft^2

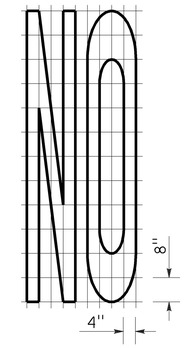

A=14 ft^2

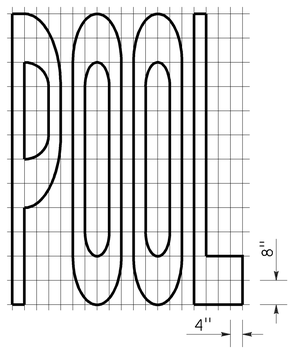

A=23 ft^2

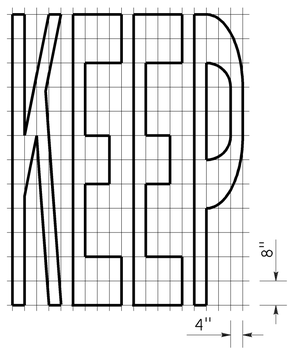

A=24 ft^2

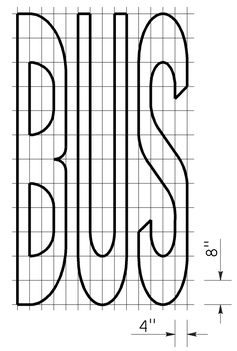

A=20 ft^2

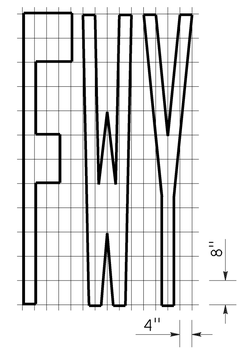

A=16 ft^2

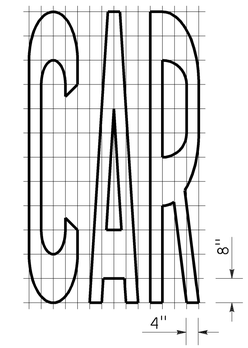

A=17 ft^2

WORD MARKINGS			
ITEM	ft^2	ITEM	ft^2
LANE	24	NO	14
POOL	23	BIKE	21
CAR	17	BUS	20
CLEAR	27	ONLY	22
KEEP	24	FWY	16

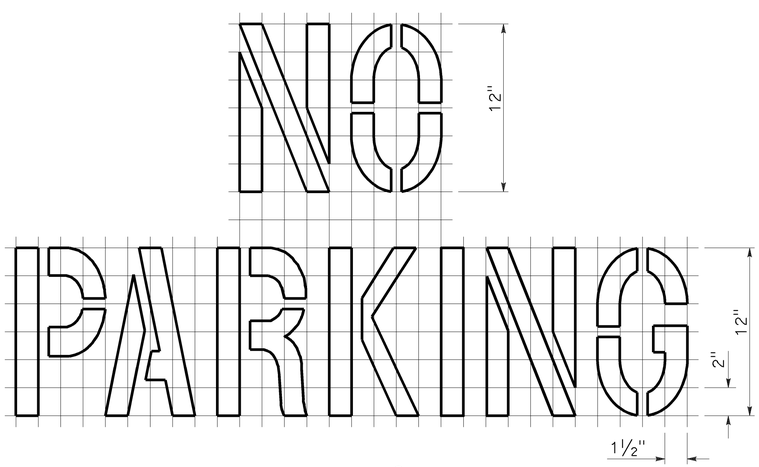

A=2 ft^2
See Notes 6 and 7

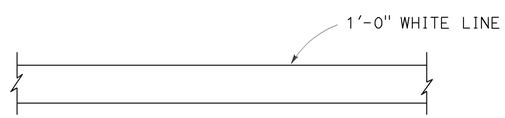

LIMIT LINE (STOP LINE)

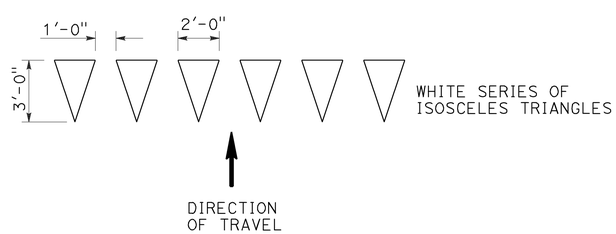

YIELD LINE

NOTES:

1. If a message consists of more than one word, it should read "UP", i.e., the first word should be nearest the driver.
2. The space between words should be at least four times the height of the characters for low speed roads, but not more than ten times the height of the characters. The space may be reduced appropriately where there is limited space because of local conditions.
3. Minor variations in dimensions may be accepted by the Engineer.
4. Portions of a letter, number or symbol may be separated by connecting segments not to exceed 2" in width.
5. The words "NO PARKING" pavement marking is to be used for parking facilities. For typical locations of markings, see Standard Plans A90A and A90B.
6. The words "NO PARKING", shall be painted in white letters no less than 1'-0" high on a contrasting background and located so that it is visible to traffic enforcement officials.

STATE OF CALIFORNIA
DEPARTMENT OF TRANSPORTATION

PAVEMENT MARKINGS WORDS, LIMIT AND YIELD LINES

NO SCALE

RSP A24E DATED JULY 20, 2012 SUPERSEDES STANDARD PLAN A24E
DATED MAY 20, 2011 - PAGE 17 OF THE STANDARD PLANS BOOK DATED 2010.

REVISED STANDARD PLAN RSP A24E

2010 REVISED STANDARD PLAN RSP A24E

6-12-12

Dist	COUNTY	ROUTE	POST MILES TOTAL PROJECT	SHEET No.	TOTAL SHEETS
04	Nap	29	47.0/47.2	67	146

Randell D. Hiatt
REGISTERED CIVIL ENGINEER

July 19, 2013
PLANS APPROVAL DATE

REGISTERED PROFESSIONAL ENGINEER
Randell D. Hiatt
No. C50200
Exp. 6-30-15
CIVIL
STATE OF CALIFORNIA

THE STATE OF CALIFORNIA OR ITS OFFICERS OR AGENTS SHALL NOT BE RESPONSIBLE FOR THE ACCURACY OR COMPLETENESS OF SCANNED COPIES OF THIS PLAN SHEET.

TO ACCOMPANY PLANS DATED 6-23-14

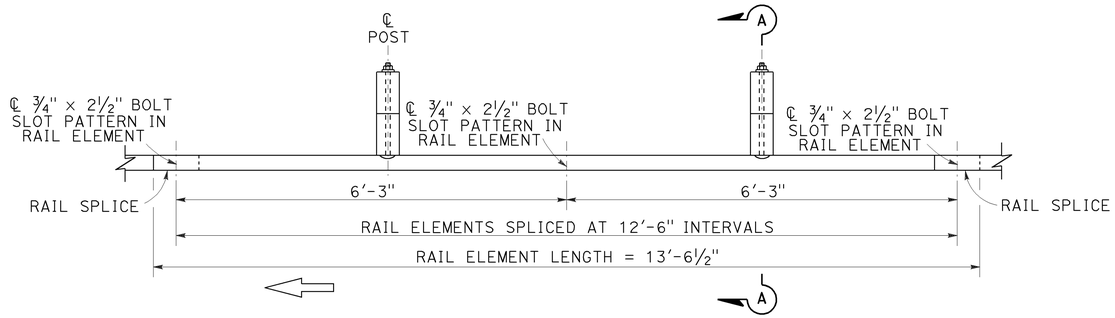

PLAN

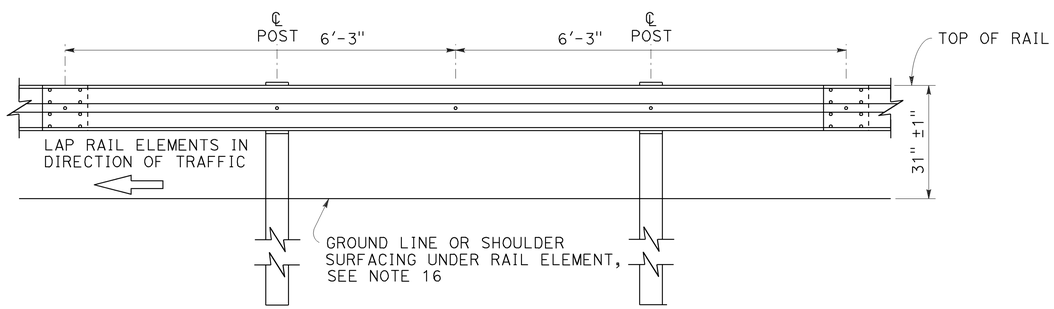

ELEVATION

MIDWEST GUARDRAIL SYSTEM WITH WOOD POST AND BLOCKS

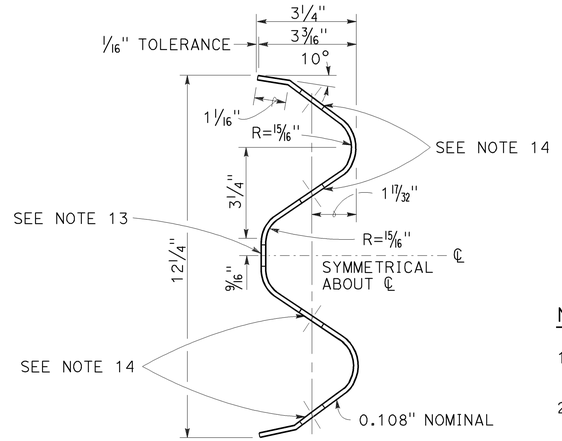

SECTION THRU RAIL ELEMENT

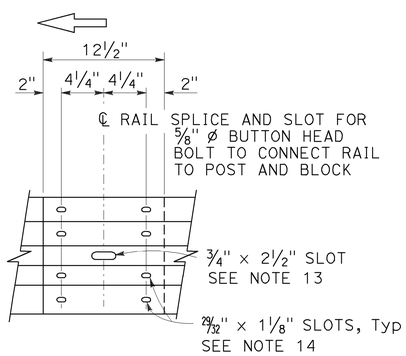

ELEVATION

RAIL ELEMENT SPLICE DETAIL

a) Connect the over lapped end of the rail elements with ⅝" ø × 1⅜" button head oval shoulder splice bolts inserted into the 29⁄32" × 1⅛" slots and bolted together with ⅝" ø recessed hex nuts. Recess of hex nut points toward rail element. A total of 8 bolts and nuts are to be used at each rail splice connection.

b) The ends of the rail elements are to be overlapped in the direction of traffic (see details).

c) Where end cap is to be attached to the end of a rail element, a total of 4 of the above described splice bolts and nuts are to be used.

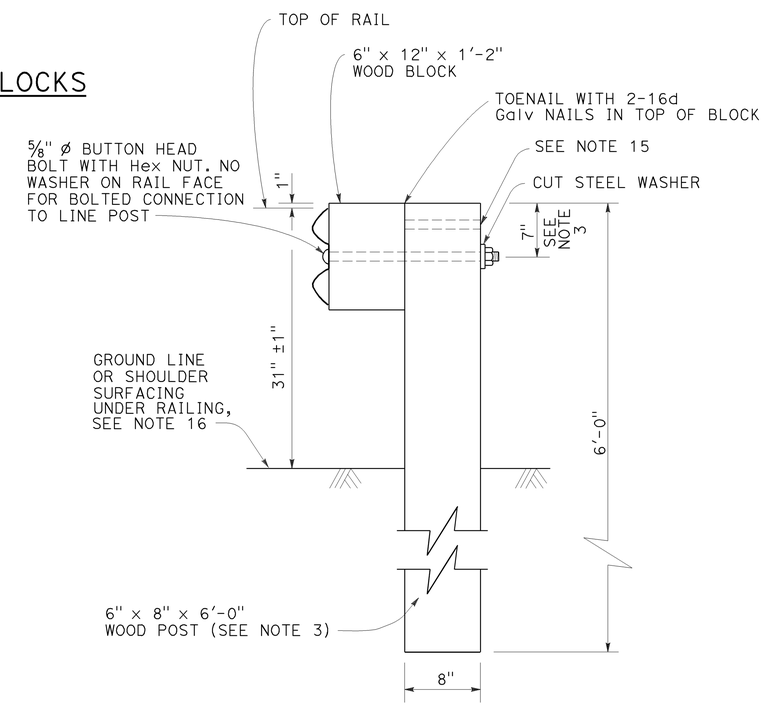

SECTION A-A

TYPICAL WOOD LINE POST INSTALLATION

See Note 4

NOTES:

1. For details of steel post installations, see Revised Standard Plan RSP A77L2.
2. For details of standard hardware used to construct MGS, see Revised Standard Plan RSP A77M1.
3. For details of wood posts and wood blocks used to construct MGS, see Revised Standard Plan RSP A77N1.
4. For additional installation details, see Revised Standard Plan RSP A77N3.
5. MGS post spacing to be 6'-3" center to center, except as otherwise noted.
6. For MGS typical layouts, see the A77P, A77Q and A77R Series of Standard Plans.
7. If railing is connected to terminal system end treatment, use 31" height terminal system end treatment.
8. For MGS end anchor details, see Revised Standard Plans RSP A77S1 and RSP A77T2.
9. For details of MGS transition to bridge railing, see Revised Standard Plan RSP A77U4.
10. For additional details of MSG connection to bridge railing, see Revised Standard Plans RSP A77U1, RSP A77U2 and RSP A77V1.
11. For MGS connection details to abutments and walls, see Revised Standard Plan RSP A77U3.
12. For typical MGS delineation and dike positioning details, see Revised Standard Plan RSP A77N4.
13. Slotted hole for bolted connection of rail element to block and post. See "Section Thru Rail Element".
14. Slotted holes for splice bolts to overlap ends of rail element. See "Section Thru Rail Element".
15. Additional hole in uppermost portion of line post is for potential future adjustments of railing height. See Revised Standard Plan RSP A77N1.
16. Install posts in soil.

STATE OF CALIFORNIA
DEPARTMENT OF TRANSPORTATION

MIDWEST GUARDRAIL SYSTEM STANDARD RAILING SECTION (WOOD POST WITH WOOD BLOCK)

NO SCALE

RSP A77L1 DATED JULY 19, 2013 SUPPLEMENTS STANDARD PLANS BOOK DATED 2010.

REVISED STANDARD PLAN RSP A77L1

2010 REVISED STANDARD PLAN RSP A77L1

7-3-13

Dist	COUNTY	ROUTE	POST MILES TOTAL PROJECT	SHEET No.	TOTAL SHEETS
04	Nap	29	47.0/47.2	68	146

Randell D. Hiatt
REGISTERED CIVIL ENGINEER

July 19, 2013
PLANS APPROVAL DATE

REGISTERED PROFESSIONAL ENGINEER
Randell D. Hiatt
No. C50200
Exp. 6-30-15
CIVIL
STATE OF CALIFORNIA

THE STATE OF CALIFORNIA OR ITS OFFICERS OR AGENTS SHALL NOT BE RESPONSIBLE FOR THE ACCURACY OR COMPLETENESS OF SCANNED COPIES OF THIS PLAN SHEET.

TO ACCOMPANY PLANS DATED 6-23-14

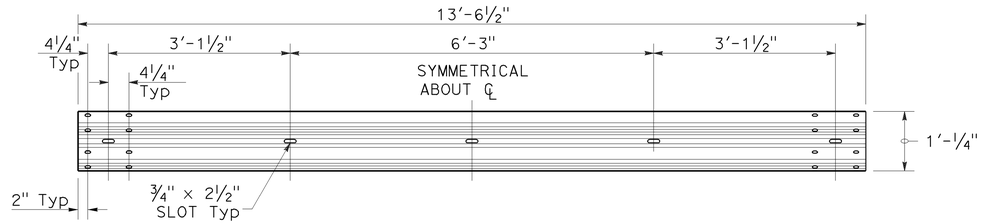

TYPICAL RAIL ELEMENT

NOTE:

1. Slotted holes for splice bolts to overlap ends of rail element.

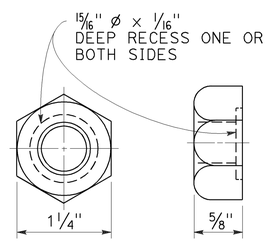

⅝" ø RECESS NUT

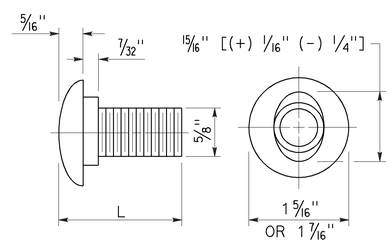

⅝" ø BUTTON HEAD BOLT

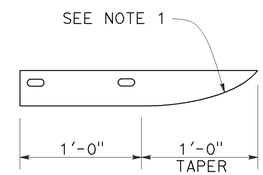

PLAN

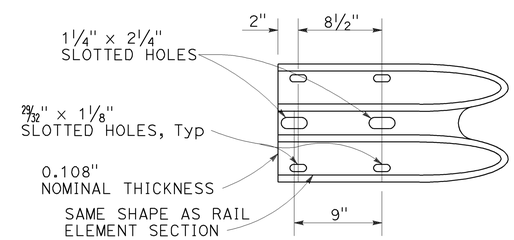

ELEVATION

END CAP
(TYPE A)

BUTTON HEAD BOLT

L	THREAD LENGTH
1⅜"	FULL THREAD LENGTH
2"	FULL THREAD LENGTH
10"	4" Min THREAD LENGTH
18"	4" Min THREAD LENGTH
20"	4" Min THREAD LENGTH
22"	4" Min THREAD LENGTH
26"	4" Min THREAD LENGTH
36"	4" Min THREAD LENGTH
** 2¾"	2" Min THREAD LENGTH
** 19"	4" Min THREAD LENGTH

** For nested rail applications.

STATE OF CALIFORNIA
DEPARTMENT OF TRANSPORTATION

MIDWEST GUARDRAIL SYSTEM STANDARD HARDWARE

NO SCALE

RSP A77M1 DATED JULY 19, 2013 SUPPLEMENTS THE STANDARD PLANS BOOK DATED 2010.

REVISED STANDARD PLAN RSP A77M1

2010 REVISED STANDARD PLAN RSP A77M1

7-3-13

Dist	COUNTY	ROUTE	POST MILES TOTAL PROJECT	SHEET No.	TOTAL SHEETS
04	Nap	29	47.0/47.2	69	146

Randell D. Hiatt
REGISTERED CIVIL ENGINEER

July 19, 2013
PLANS APPROVAL DATE

REGISTERED PROFESSIONAL ENGINEER
Randell D. Hiatt
No. C50200
Exp. 6-30-15
CIVIL
STATE OF CALIFORNIA

THE STATE OF CALIFORNIA OR ITS OFFICERS OR AGENTS SHALL NOT BE RESPONSIBLE FOR THE ACCURACY OR COMPLETENESS OF SCANNED COPIES OF THIS PLAN SHEET.

TO ACCOMPANY PLANS DATED 6-23-14

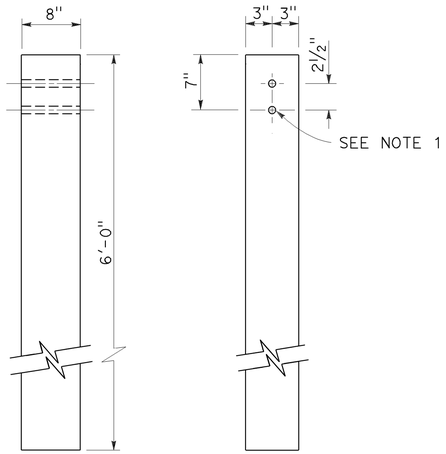

SIDE FRONT

6" x 8" WOOD POST
See Note 3

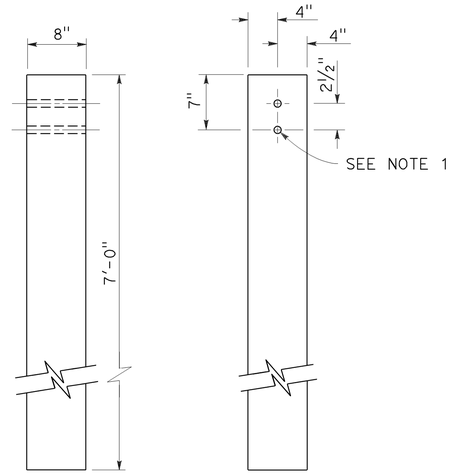

SIDE FRONT

8" x 8" WOOD POST
See Note 4

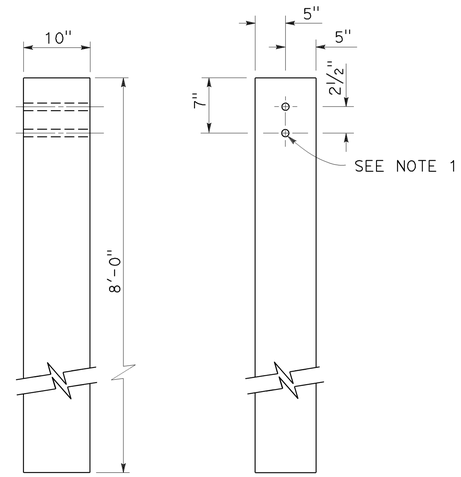

SIDE FRONT

10" x 10" WOOD POST
See Note 5

NOTES:

1. All holes in wood posts and blocks shall be ¾" Dia ± 1/16".
2. Dimensions shown for wood post are nominal.
3. This post and block combination used for standard line post sections of MGS.
4. This post and 8" x 12" block combination used for line post sections of MGS on narrow roadways.
5. This post and 8" x 12" block combination is typically used where strengthened line post sections of MGS are warranted to shield fixed objects.
6. See Revised Standard Plan RSP A77L3 for use of 6" x 8" and 8" x 8" wood blocks.

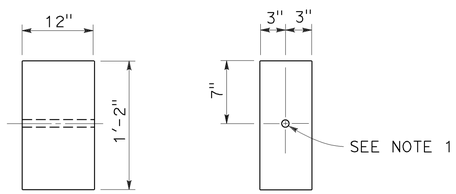

SIDE FRONT

6" x 12" WOOD BLOCK
See Note 3

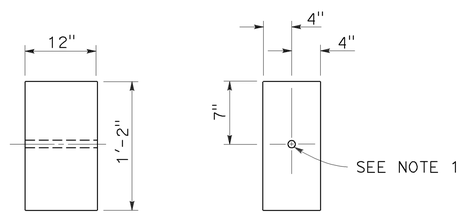

SIDE FRONT

8" x 12" WOOD BLOCK

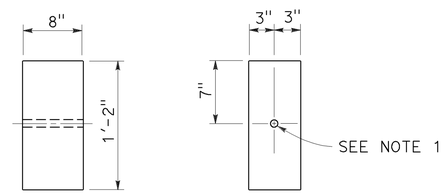

SIDE FRONT

6" x 8" WOOD BLOCK
Only for use with metal beam guard rail see Note 6

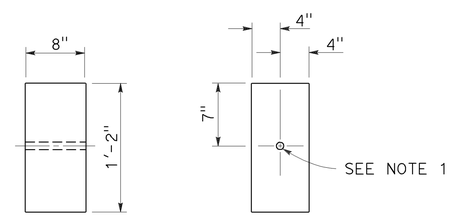

SIDE FRONT

8" x 8" WOOD BLOCK
Only for use with metal beam guard rail see Note 6

STATE OF CALIFORNIA
DEPARTMENT OF TRANSPORTATION

MIDWEST GUARDRAIL SYSTEM WOOD POST AND WOOD BLOCK DETAILS

NO SCALE

RSP A77N1 DATED JULY 19, 2013 SUPPLEMENTS THE STANDARD PLANS BOOK DATED 2010.

REVISED STANDARD PLAN RSP A77N1

2010 REVISED STANDARD PLAN RSP A77N1

7-3-13

Dist	COUNTY	ROUTE	POST MILES TOTAL PROJECT	SHEET No.	TOTAL SHEETS
04	Nap	29	47.0/47.2	70	146

Randell D. Hiatt
REGISTERED CIVIL ENGINEER

November 15, 2013
PLANS APPROVAL DATE

REGISTERED PROFESSIONAL ENGINEER
Randell D. Hiatt
No. C50200
Exp. 6-30-15
CIVIL
STATE OF CALIFORNIA

THE STATE OF CALIFORNIA OR ITS OFFICERS OR AGENTS SHALL NOT BE RESPONSIBLE FOR THE ACCURACY OR COMPLETENESS OF SCANNED COPIES OF THIS PLAN SHEET.

TO ACCOMPANY PLANS DATED 6-23-14

2010 REVISED STANDARD PLAN RSP A77N3

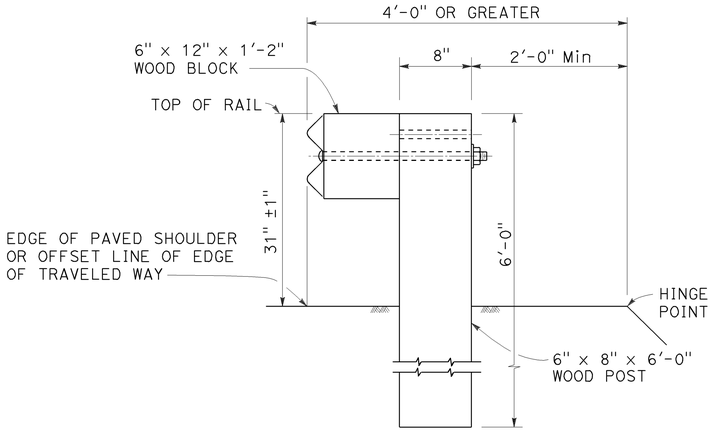

DETAIL A

TYPICAL ROADWAY INSTALLATION

See Note 1

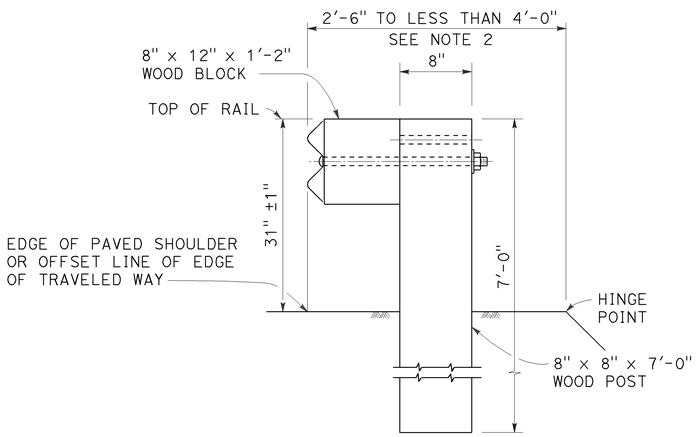

DETAIL B

NARROW ROADWAY INSTALLATION

See Note 1

POST EMBEDMENT

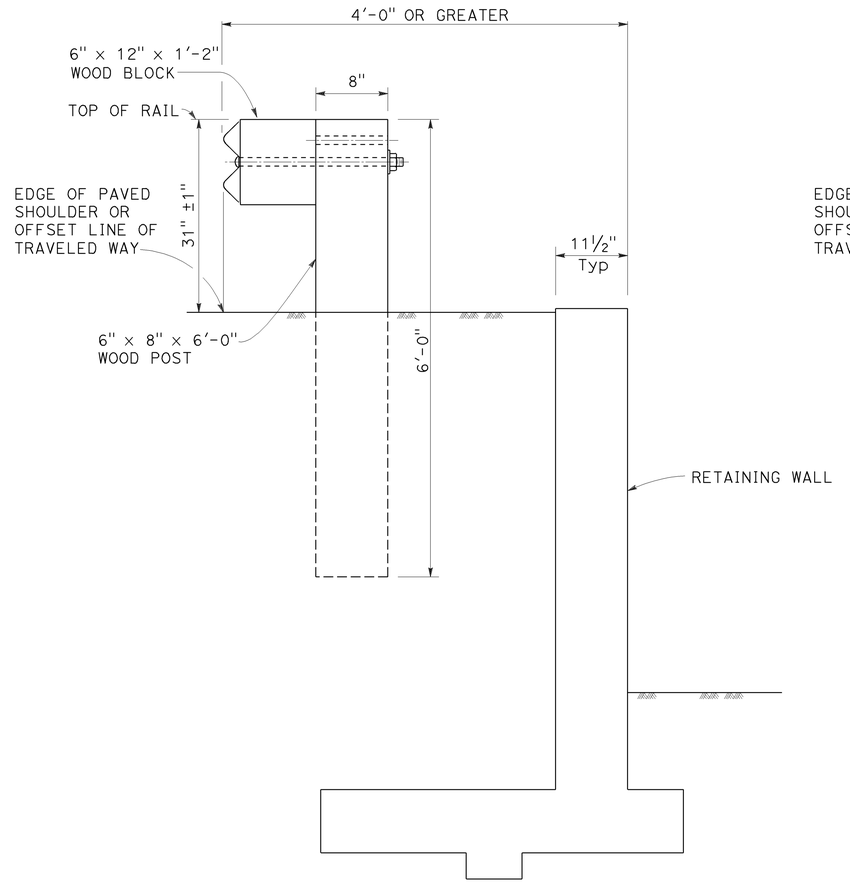

DETAIL C

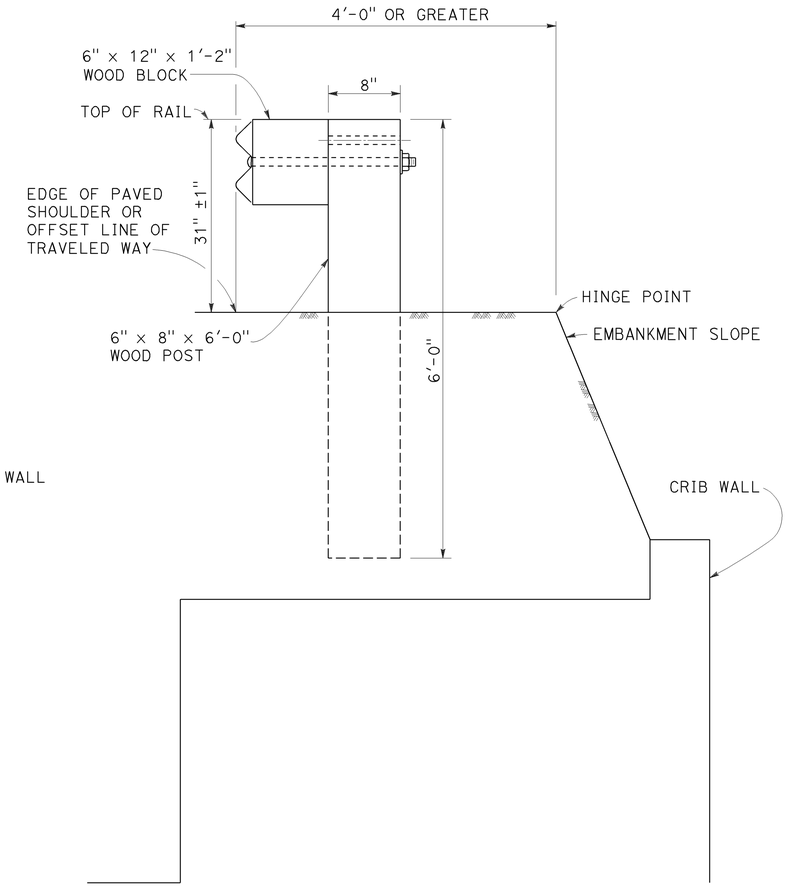

DETAIL D

INSTALLATION AT EARTH RETAINING WALLS

NOTES:

1. These installation details also applicable to steel line post installations. For Detail A, C, and D, where steel line post installations are constructed, W6 x 8.5 or W6 x 9 steel post, 6'-0" in length, with 6" x 12" x 1'-2" notched wood blocks or notched recycled plastic blocks are to be used in place of the size of wood post and wood block shown. For Detail B, where steel line post installations are constructed, W6 x 15 steel post, 8'-0" in length, with 8" x 12" x 1'-2" notched wood blocks or notched recycled plastic blocks are to be used in place of the size of wood post and wood block shown. For additional installation details, see Revised Standard Plan RSP A77L1 and RSP A77L2.
2. Where the distance between the face of the rail and the hinge point is less than 2'-6", see the Project Plans for special details.
3. For dike positioning with MGS installations, see Revised Standard Plan RSP A77N4.

STATE OF CALIFORNIA
DEPARTMENT OF TRANSPORTATION

MIDWEST GUARDRAIL SYSTEM TYPICAL LINE POST EMBEDMENT AND HINGE POINT OFFSET DETAILS

NO SCALE

RSP A77N3 DATED NOVEMBER 15, 2013 SUPERSEDES RSP A77N3
DATED JULY 19, 2013 THAT SUPPLEMENTS THE STANDARD PLANS BOOK DATED 2010.

REVISED STANDARD PLAN RSP A77N3

10-29-13

Dist	COUNTY	ROUTE	POST MILES TOTAL PROJECT	SHEET No.	TOTAL SHEETS
04	Nap	29	47.0/47.2	71	146

Randell D. Hiatt
REGISTERED CIVIL ENGINEER

July 19, 2013
PLANS APPROVAL DATE

REGISTERED PROFESSIONAL ENGINEER
Randell D. Hiatt
No. C50200
Exp. 6-30-15
CIVIL
STATE OF CALIFORNIA

THE STATE OF CALIFORNIA OR ITS OFFICERS OR AGENTS SHALL NOT BE RESPONSIBLE FOR THE ACCURACY OR COMPLETENESS OF SCANNED COPIES OF THIS PLAN SHEET.

TO ACCOMPANY PLANS DATED 6-23-14

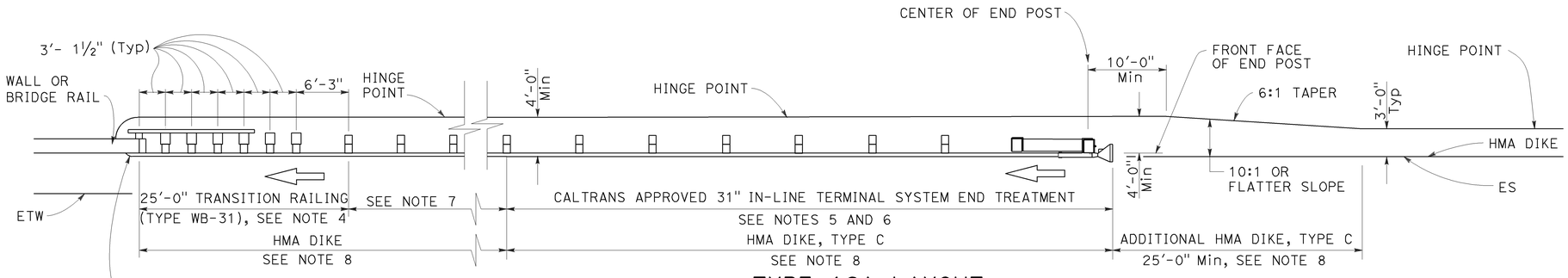

TYPE 12A LAYOUT

(MGS installation at structure approach with
31" In-line end treatment at traffic approach end of railing)
See Notes 9

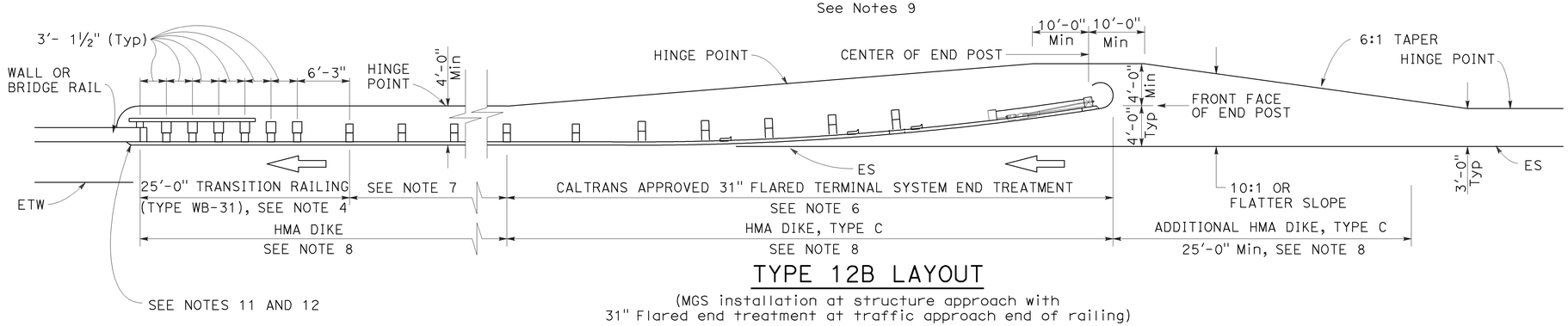

TYPE 12B LAYOUT

(MGS installation at structure approach with
31" Flared end treatment at traffic approach end of railing)
See Notes 9

NOTES:

1. Line post, blocks and hardware to be used are shown on Revised Standard Plans RSP A77L1, RSP A77L2, RSP A77M1, RSP A77N1 and RSP A77N2.
2. MGS post spacing to be 6'-3" center to center, except as otherwise noted.
3. Except as noted, line posts are 6" x 8" x 6'-0" wood with 6" x 12" x 1'-2" wood blocks. W6 x 8.5 or W6 x 9 steel posts, 6'-0" in length, with 6" x 12" x 1'-2" notched wood blocks or plastic blocks may be used for 6" x 8" x 6'-0" wood posts with 6" x 12" x 1'-2" wood blocks where applicable and when specified.
4. For Transition Railing (Type WB-31) details for Types 12A and 12B Layouts, see Revised Standard Plan RSP A77U4.
5. 31" in-line terminal system end treatments are used where site conditions will not accommodate a 31" flared end treatment.
6. The type 31" of terminal system end treatment to be used will be shown on the Project Plans.
7. Dependent on site conditions (embankment height, side slopes, or other fixed objects), it may be advisable to construct additional guard railing (a length equal to multiples of 12'-6" with 6'-3" post spacing) between the transition railing and end treatment. A 12.5 degree angle of departure can be drawn on the Project Plans from the edge of traveled way through the outer most point of the fixed object to determine the additional length of railing needed.
8. Where placement of dike is required with guard railing installations, see Revised Standard Plan RSP A77N4 for dike positioning details.
9. Type 12A or Type 12B Layouts are typically used:
   a. To the right of approaching traffic, at the end of a structure, on two-lane conventional highway where the roadbed width across the structure is less than 40 feet.
   b. To the left of approaching traffic, at the end of a structure, on two-lane conventional highway where the roadbed width across the structure is less than 40 feet.
   c. To the right of approaching traffic at the end of each structure on multilane freeways or expressways with separate adjacent or parallel bridges.
   d. To the right of approaching traffic at the end of the structure on multilane freeways or expressways with decked median on the bridge.
10. See Revised Standard Plan RSP A77Q3 for typical layout used left of approaching traffic at the ends of each structure on multilane freeways or expressways with separate adjacent or parallel bridges.
11. For additional details of typical connections to bridge rail, see Connection Detail AA on Revised Standard Plans RSP A77U1 and RSP A77U2 and Connection Detail FF on Revised Standard Plans RSP A77V1 and RSP A77V2.
12. For additional details of a typical connection to walls or abutments, see Revised Standard Plan RSP A77U3.

STATE OF CALIFORNIA
DEPARTMENT OF TRANSPORTATION

MIDWEST GUARDRAIL SYSTEM TYPICAL LAYOUTS FOR STRUCTURE APPROACH

NO SCALE

RSP A77Q1 DATED JULY 19, 2013 SUPPLEMENTS THE STANDARD PLANS BOOK DATED 2010.

REVISED STANDARD PLAN RSP A77Q1

2010 REVISED STANDARD PLAN RSP A77Q1

Dist	COUNTY	ROUTE	POST MILES TOTAL PROJECT	SHEET No.	TOTAL SHEETS
04	Nap	29	47.0/47.2	72	146

Randell D. Hiatt
REGISTERED CIVIL ENGINEER

July 19, 2013
PLANS APPROVAL DATE

REGISTERED PROFESSIONAL ENGINEER
Randell D. Hiatt
No. C50200
Exp. 6-30-15
CIVIL
STATE OF CALIFORNIA

THE STATE OF CALIFORNIA OR ITS OFFICERS OR AGENTS SHALL NOT BE RESPONSIBLE FOR THE ACCURACY OR COMPLETENESS OF SCANNED COPIES OF THIS PLAN SHEET.

TO ACCOMPANY PLANS DATED 6-23-14

2010 REVISED STANDARD PLAN RSP A77Q2

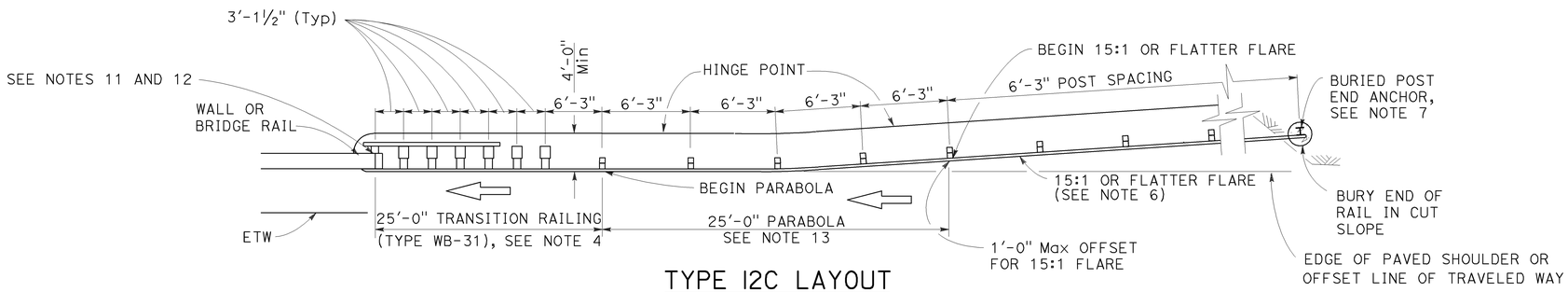

TYPE 12C LAYOUT

(MGS installation at structure approach with a Buried end anchor treatment at traffic approach end of railing)
See Notes 8 and 9

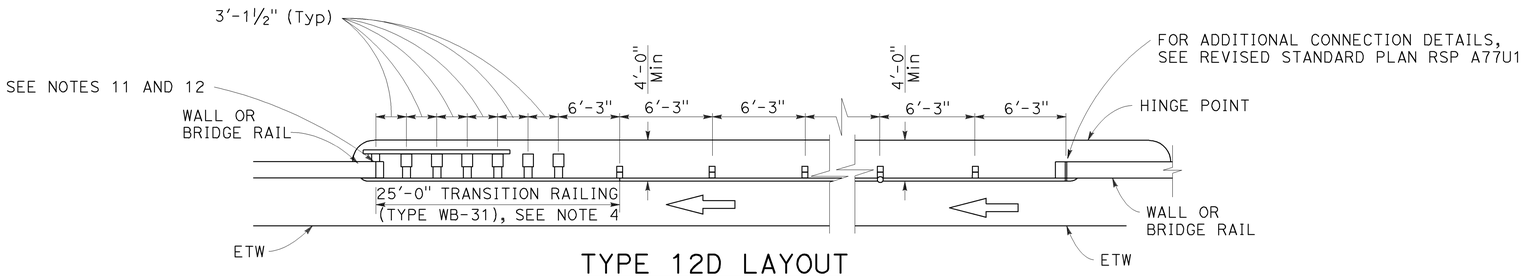

TYPE 12D LAYOUT

(Continuous MGS installation between structures)
See Notes 5 and 9

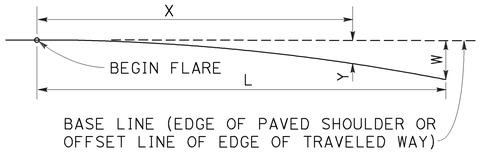

$$Y = \frac{WX^2}{L^2}$$

Y = OFFSET FROM BASE LINE
W = MAXIMUM OFFSET
X = DISTANCE ALONG BASE LINE
L = LENGTH OF FLARE

PARABOLIC FLARE OFFSETS

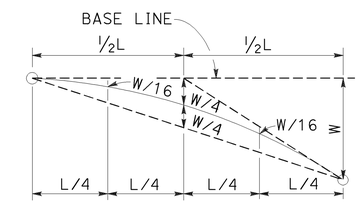

TYPICAL PARABOLIC LAYOUT

NOTES:

1. Line post, blocks and hardware to be used are shown on Revised Standard Plans RSP A77L1, RSP A77L2, RSP A77M1, RSP A77N1 and RSP A77N2.
2. MGS post spacing to be 6'-3" center to center, except as otherwise noted.
3. Except as noted, line posts are 6" x 8" x 6'-0" m wood with 6" x 12" x 1'-2" wood blocks. W6 x 8.5 or W6 x 9 steel posts, 6'-0" in length, with 6" x 12" x 1'-2" notched wood blocks or plastic blocks may be used for 6" x 8" x 6'-0" wood posts with 6" x 12" x 1'-2" wood blocks where applicable and when specified.
4. For Transition Railing (Type WB-31) details for Types 12C and 12D Layouts, see Revised Standard Plan RSP A77U4.
5. Type 12D layout is typically used where continous MGS is recommended between structures.
6. The 15:1 or flatter flare for Type 12C Layout is based on the edge of the paved shoulder or offset line of edge of the traveled way. The length of MGS with the 15:1 or flatter flare is based on site conditions and should be a length equal to multiples of 12'-6".
7. For details of the buried post end anchor used with Type 12C Layout, see Revised Standard Plan RSP A77T2.
8. Where placement of dike is required with MGS installations, see Revised Standard Plan RSP A77N4 for dike positioning details.
9. Type 12C Layout is typically used:
   a. To the right of approaching traffic, at the end of the structure, on two-lane conventional highway where the roadbed width across the structure is less than 40 feet.
   b. To the left of approaching traffic, at each of a structure, on two-lane conventional highway where the roadbed width across the structure is less than 40 feet.
   c. To the right of approaching traffic at the end of each structure on multilane freeways or expressways with separate adjacent or parallel bridges.
   d. To the right of approaching traffic at the end of the structure on multilane freeways or expressways with decked median on the bridge.
10. See Revised Standard Plan RSP A77Q3 for typical layout used left of approaching traffic at the ends of each structure on multilane freeways or expressways with separate adjacent or parallel bridges.
11. For additional details of typical connections to bridge rail, see Connection Detail AA on Revised Standard Plans RSP A77U1 and RSP A77U2 and Connection Detail FF on Revised Standard Plans RSP A77V1 and RSP A77V2.
12. For additional details of a typical connection to walls or abutments, see Revised Standard Plan RSP A77U3.
13. For typical flare offsets for 25'-0" length parabola with maximum offset of 1'-0", see Revised Standard Plan RSP A77P1.

STATE OF CALIFORNIA
DEPARTMENT OF TRANSPORTATION

MIDWEST GUARDRAIL SYSTEM TYPICAL LAYOUTS FOR STRUCTURE APPROACH AND BETWEEN STRUCTURES

NO SCALE

RSP A77Q2 DATED JULY 19, 2013 SUPPLEMENTS THE STANDARD PLANS BOOK DATED 2010.

REVISED STANDARD PLAN RSP A77Q2

Dist	COUNTY	ROUTE	POST MILES TOTAL PROJECT	SHEET No.	TOTAL SHEETS
04	Nap	29	47.0/47.2	73	146

Randell D. Hiatt
REGISTERED CIVIL ENGINEER

November 15, 2013
PLANS APPROVAL DATE

REGISTERED PROFESSIONAL ENGINEER
Randell D. Hiatt
No. C50200
Exp. 6-30-15
CIVIL
STATE OF CALIFORNIA

THE STATE OF CALIFORNIA OR ITS OFFICERS OR AGENTS SHALL NOT BE RESPONSIBLE FOR THE ACCURACY OR COMPLETENESS OF SCANNED COPIES OF THIS PLAN SHEET.

TO ACCOMPANY PLANS DATED 6-23-14

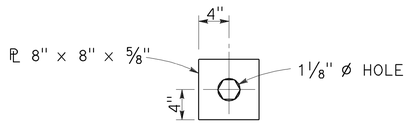

DETAIL "A"
CABLE CONNECTION
END PLATE

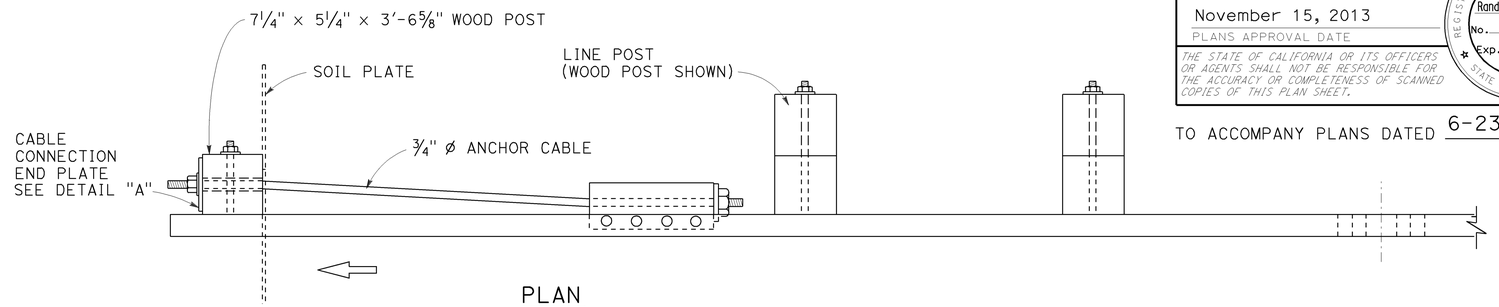

PLAN

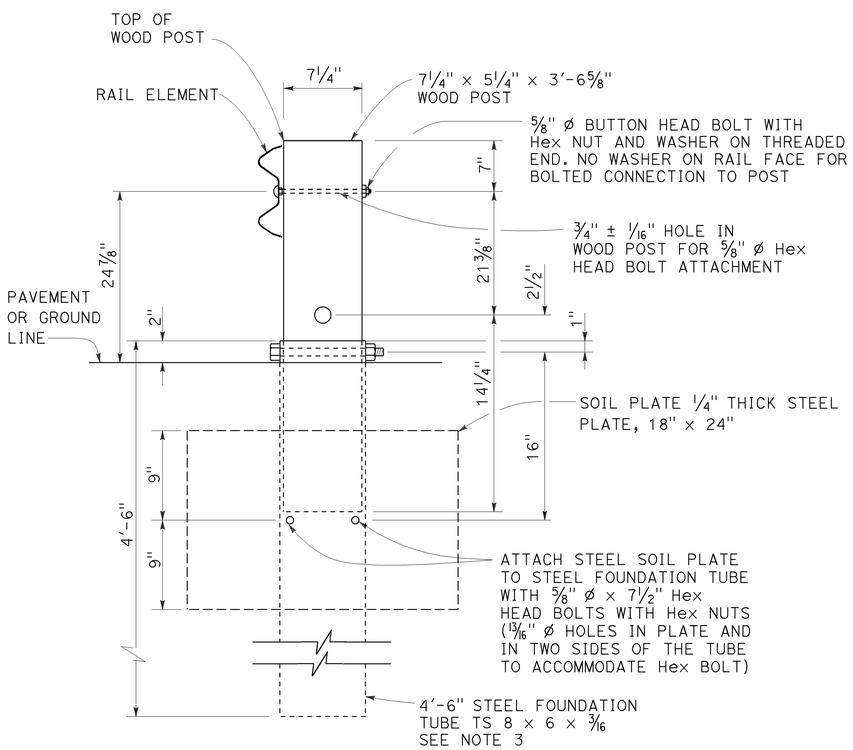

SECTION A-A

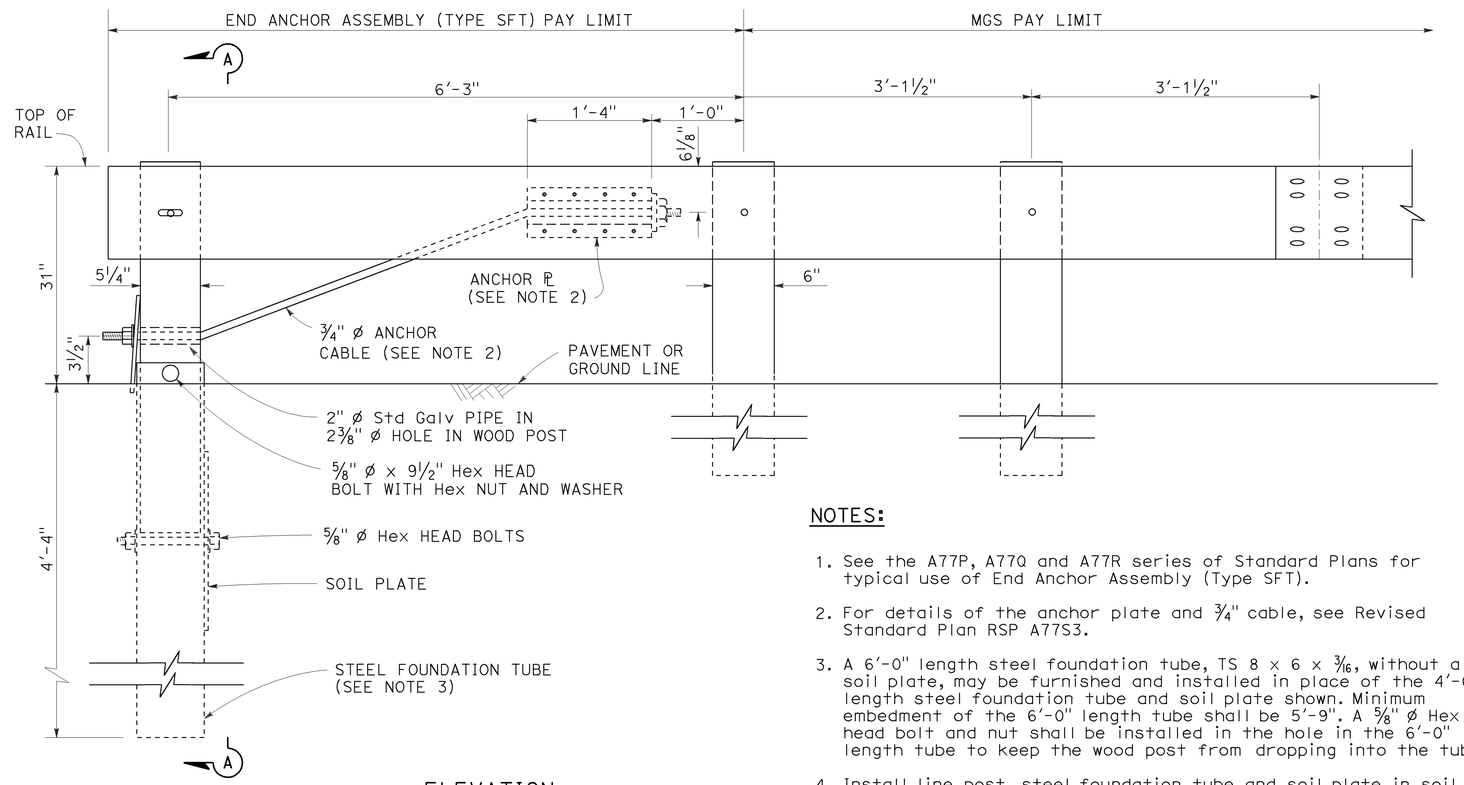

ELEVATION

END ANCHOR
ASSEMBLY (TYPE SFT)
See Note 1

NOTES:

1. See the A77P, A77Q and A77R series of Standard Plans for typical use of End Anchor Assembly (Type SFT).
2. For details of the anchor plate and 3/4" cable, see Revised Standard Plan RSP A77S3.
3. A 6'-0" length steel foundation tube, TS 8 x 6 x 3/16, without a soil plate, may be furnished and installed in place of the 4'-6" length steel foundation tube and soil plate shown. Minimum embedment of the 6'-0" length tube shall be 5'-9". A 5/8" ø Hex head bolt and nut shall be installed in the hole in the 6'-0" length tube to keep the wood post from dropping into the tube.
4. Install line post, steel foundation tube and soil plate in soil.

STATE OF CALIFORNIA
DEPARTMENT OF TRANSPORTATION

MIDWEST GUARDRAIL SYSTEM END ANCHOR ASSEMBLY (TYPE SFT)

NO SCALE

RSP A77S1 DATED NOVEMBER 15, 2013 SUPERSEDES RSP A77S1
DATED JULY 19, 2013 THAT SUPPLEMENTS THE STANDARD PLANS BOOK DATED 2010.

REVISED STANDARD PLAN RSP A77S1

2010 REVISED STANDARD PLAN RSP A77S1

10-4-13

Dist	COUNTY	ROUTE	POST MILES TOTAL PROJECT	SHEET No.	TOTAL SHEETS
04	Nap	29	47.0/47.2	74	146

Randell D. Hiatt
REGISTERED CIVIL ENGINEER

November 15, 2013
PLANS APPROVAL DATE

REGISTERED PROFESSIONAL ENGINEER
Randell D. Hiatt
No. C50200
Exp. 6-30-15
CIVIL
STATE OF CALIFORNIA

THE STATE OF CALIFORNIA OR ITS OFFICERS OR AGENTS SHALL NOT BE RESPONSIBLE FOR THE ACCURACY OR COMPLETENESS OF SCANNED COPIES OF THIS PLAN SHEET.

TO ACCOMPANY PLANS DATED 6-23-14

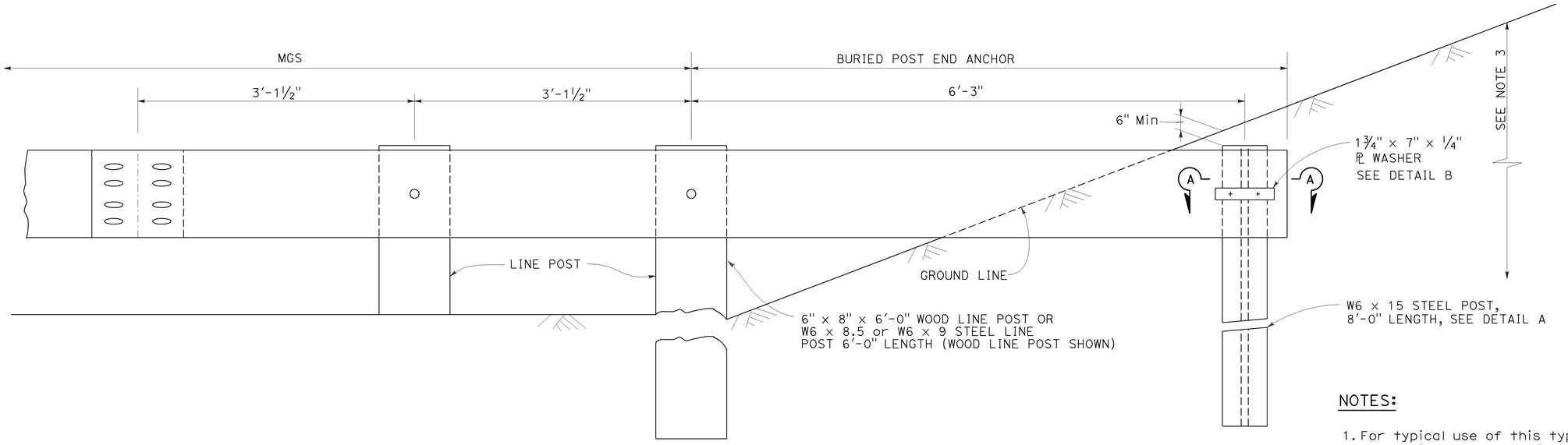

BURIED POST END ANCHOR

See Note 3

NOTES:

1. For typical use of this type of end anchor with MGS see the A77P, A77Q and A77R Series of the Standard Plans.
2. Holes excavation in the slope to construct the buried post end anchor shall be backfilled with selected earth, placed in layers approximately 1'-0" thick. Each layer shall be moistened and thoroughly compacted.
3. The buried post end anchor shall only be constructed at those locations where the slope perpendicular to the roadway is non-traversable.

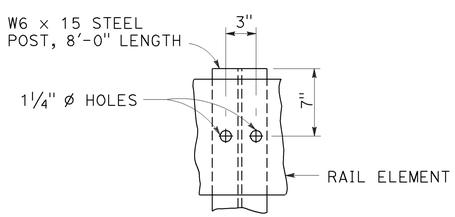

DETAIL A

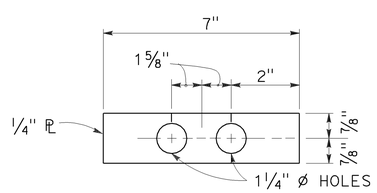

DETAIL B

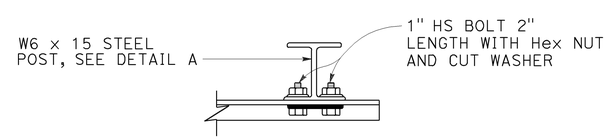

SECTION A-A

STATE OF CALIFORNIA
DEPARTMENT OF TRANSPORTATION

MIDWEST GUARDRAIL SYSTEM BURIED POST END ANCHOR

NO SCALE

RSP A77T2 DATED NOVEMBER 15, 2013 SUPERSEDES RSP A77T2
DATED JULY 19, 2013 THAT SUPPLEMENTS THE STANDARD PLANS BOOK DATED 2010.

REVISED STANDARD PLAN RSP A77T2

2010 REVISED STANDARD PLAN RSP A77T2

10-4-13

Dist	COUNTY	ROUTE	POST MILES TOTAL PROJECT	SHEET No.	TOTAL SHEETS
04	Nap	29	47.0/47.2	75	146

Randell D. Hiatt
REGISTERED CIVIL ENGINEER

November 15, 2013
PLANS APPROVAL DATE

REGISTERED PROFESSIONAL ENGINEER
Randell D. Hiatt
No. C50200
Exp. 6-30-15
CIVIL
STATE OF CALIFORNIA

THE STATE OF CALIFORNIA OR ITS OFFICERS OR AGENTS SHALL NOT BE RESPONSIBLE FOR THE ACCURACY OR COMPLETENESS OF SCANNED COPIES OF THIS PLAN SHEET.

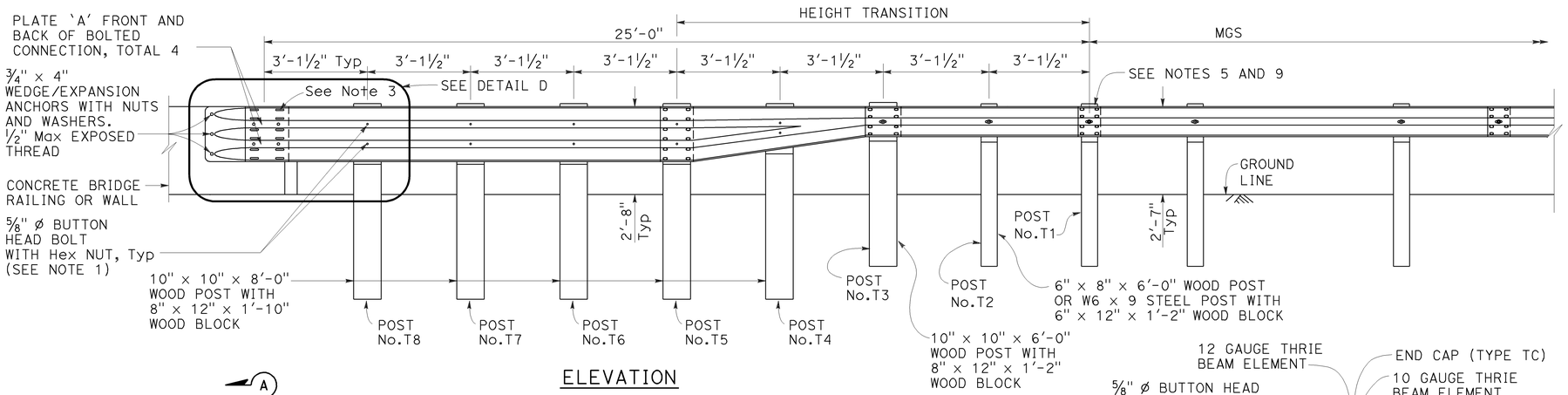

ELEVATION

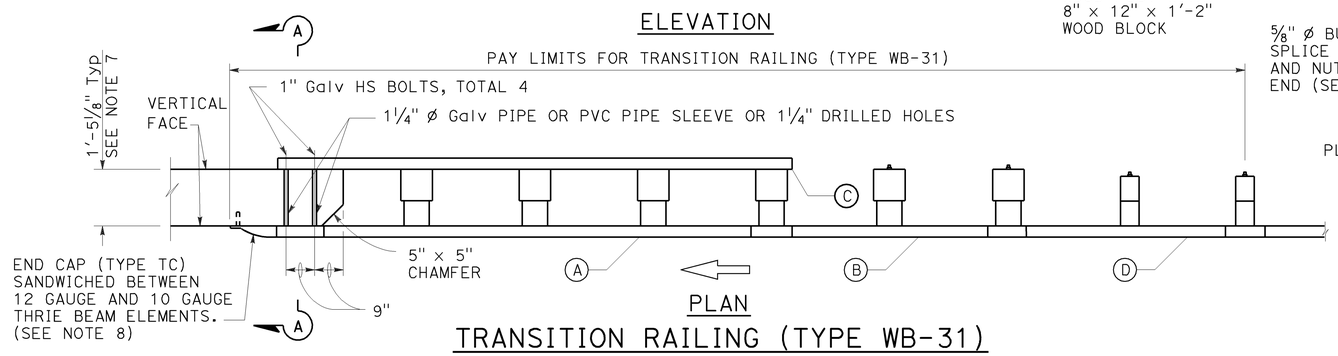

PLAN

TRANSITION RAILING (TYPE WB-31)

(No Blockout Attachment)

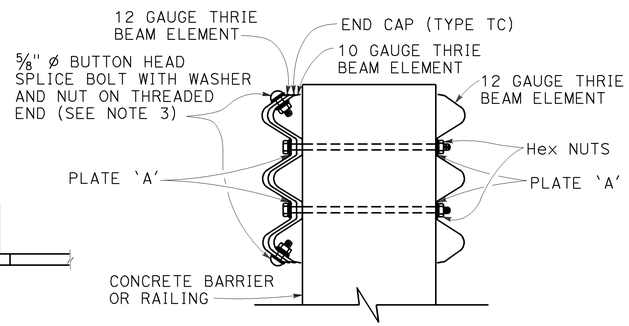

SECTION A-A

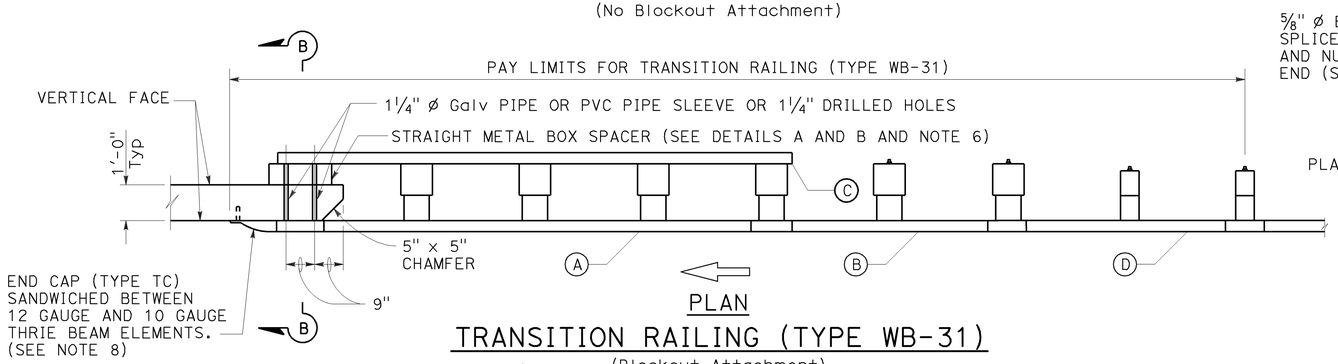

PLAN

TRANSITION RAILING (TYPE WB-31)

(Blockout Attachment)

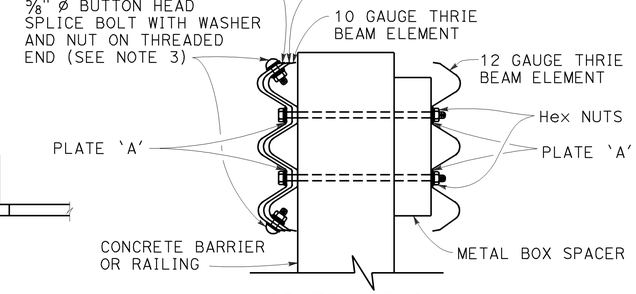

SECTION B-B

NOTES:

TO ACCOMPANY PLANS DATED 6-23-14

1. Use 5/8" ø Button head bolts and hex nuts for connections to posts. No washer on rail face for bolted connections to post.
2. The nested rail elements, end cap, and 'W' beam to thrie beam element may be spliced together prior to bolting the elements to the wood post and concrete barrier or railing.
3. Exterior splice bolt holes for rail element splices at Post No. T5 and the connection to the concrete barrier or railing shall be the standard 29/32" × 1 1/8" slot size. Interior splice bolt holes at these locations may be increased up to 1 1/4" ø. Only the top 4 and the bottom 4 splice bolts with washers and nuts are required for rail splices at Post No. T5 and the connection to the concrete barrier or railing.
4. The top elevation of Posts No. T2 through No. T7 shall not project more than 1" above the top elevation of the rail element.
5. Typically, the railing connected to Transition Railing (Type WB-31) will be either standard railing section of MGS with height transition ratio of 150:1 or a Caltrans approved 31" end treatment attached to Post No. T1.
6. The depth of the metal box spacer varies from the 9 1/8" to 1 1/2" and is dependent on the width of the concrete railing or wall. The combined dimension for the depth of the metal box spacer plus the width of railing or wall is typically 21 1/8". Where the space between the backside of the concrete railing or wall and the rear thrie beam element is less than 1 1/2", metal plates similar to Plate 'A' are to be used as spacers.
7. Where the width of the concrete railing or wall is greater than 17 1/8", wood blocks are to be used to fill the space created between the backside of Posts No. T5 through No. T8 and the rear thrie beam element. These wood blocks shall be 8" in width and 1'-2" in length. The dimension between the front thrie beam element and the rear thrie beam element is to match the width of the concrete railing or wall.
8. End cap may be installed over 12 gauge and 10 gauge thrie beam elements where transition railing is installed on the departure end of bridge railing.
9. Conform standard railing section height to 31" at Post No. T1 using height transition ratio of 150:1.

LEGEND:

(A) NESTED THRIE BEAM ELEMENTS (ONE 12 GAUGE ELEMENT NESTED OVER ONE 10 GAUGE ELEMENT).

(B) ONE ASYMMETRICAL 10 GAUGE "W" BEAM TO THRIE BEAM ELEMENT.

(C) ONE 12 GAUGE THRIE BEAM ELEMENT.

(D) ONE 10 GAUGE "W" BEAM RAIL ELEMENT (7'-3 1/2" LENGTH)

10 GAUGE = 0.138" THICK
12 GAUGE = 0.108" THICK

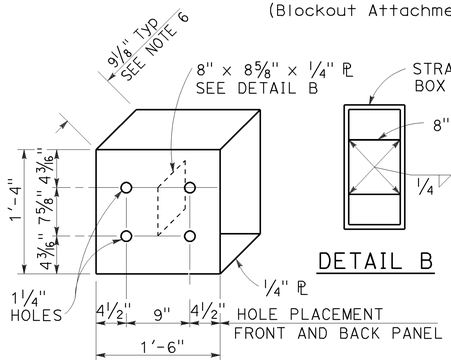

DETAIL A

STRAIGHT METAL BOX SPACER

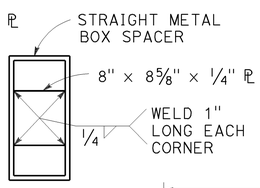

DETAIL B

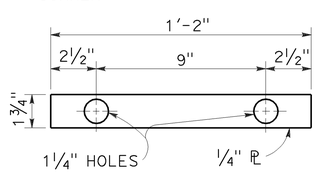

DETAIL C

PLATE 'A'

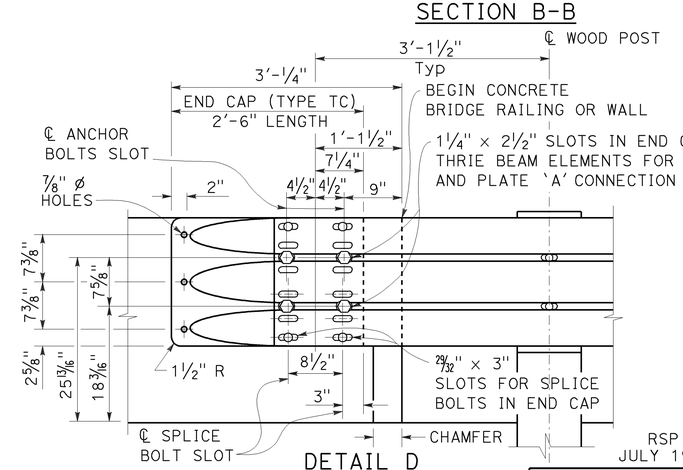

DETAIL D

STATE OF CALIFORNIA
DEPARTMENT OF TRANSPORTATION

MIDWEST GUARDRAIL SYSTEM TRANSITION RAILING (TYPE WB-31)

NO SCALE

RSP A77U4 DATED NOVEMBER 15, 2013 SUPERSEDES RSP A77U4 DATED JULY 19, 2013 THAT SUPPLEMENTS THE STANDARD PLANS BOOK DATED 2010.

REVISED STANDARD PLAN RSP A77U4

2010 REVISED STANDARD PLAN RSP A77U4

10-4-13

Dist	COUNTY	ROUTE	POST MILES TOTAL PROJECT	SHEET No.	TOTAL SHEETS
04	Nap	29	47.0/47.2	76	146

REGISTERED CIVIL ENGINEER

July 19, 2013
PLANS APPROVAL DATE

REGISTERED PROFESSIONAL ENGINEER
Michael Janzen
No. 44788
Exp. 03-31-14
CIVIL
STATE OF CALIFORNIA

THE STATE OF CALIFORNIA OR ITS OFFICERS OR AGENTS SHALL NOT BE RESPONSIBLE FOR THE ACCURACY OR COMPLETENESS OF SCANNED COPIES OF THIS PLAN SHEET.

TO ACCOMPANY PLANS DATED 6-23-14

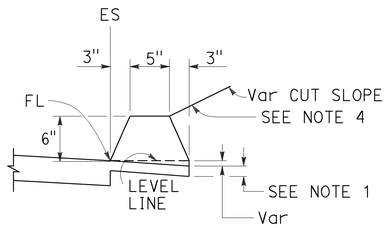

TYPE A
See Note 3

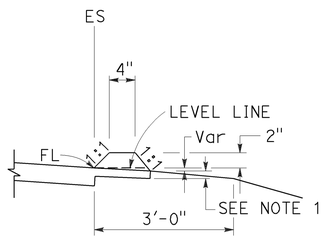

TYPE C

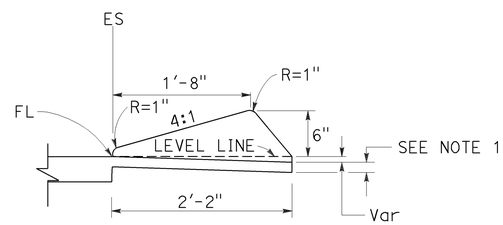

TYPE D

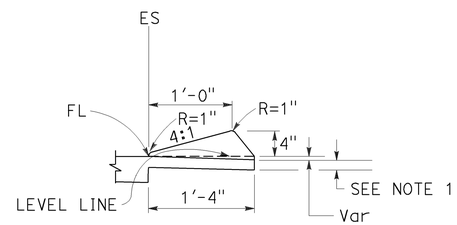

TYPE E

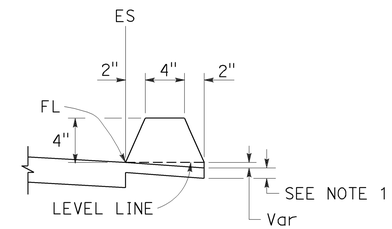

TYPE F
See Note 5

DIKES

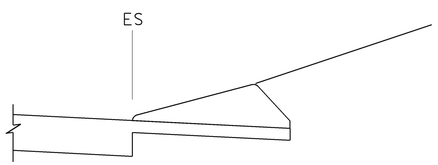

CASE C-1
Cut Slope

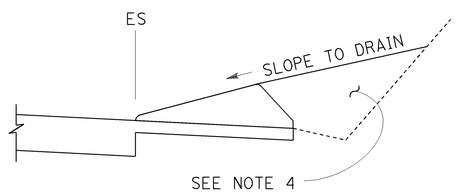

CASE C-2
Cut Slope

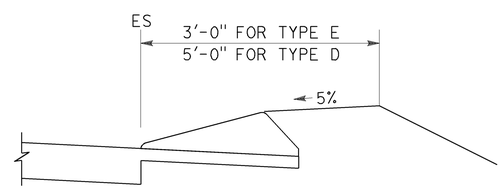

CASE F

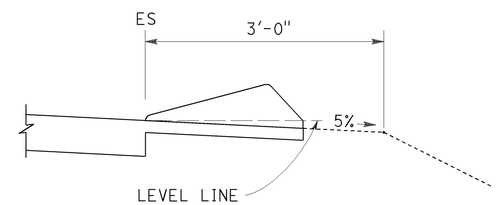

CASE R
See Note 2

TYPE D AND E BACKFILL DETAILS

NOTES:

1. For HMA shoulders only, extend top layer of HMA placed on the shoulder under dike with no joint at the ES. For projects with OGFC shoulders, do not extend OGFC under dike. See project plans for modified dike detail.
2. Case R applies to retrofit only projects where restrictive conditions do not provide enough width for Case F backfill.
3. Type A dike only to be used where restrictive slope conditions do not provide enough width to use Type D or Type E dike.
4. Fill and compact with excavated material to top of dike.
5. Use Type F dike, where dike is required with guard railing installations. See Revised Standard Plan RSP A77N4 for dike positioning details.

DIKE QUANTITIES

TYPE	CUBIC YARDS PER LINEAR FOOT
A	0.0135
C	0.0038
D	0.0293
E	0.0130
F	0.0066

Quantities based on 5% cross slope.

STATE OF CALIFORNIA
DEPARTMENT OF TRANSPORTATION

HOT MIX ASPHALT DIKES

NO SCALE

RSP A87B DATED JULY 19, 2013 SUPERSEDES STANDARD PLAN A87B DATED MAY 20, 2011 - PAGE 120 OF THE STANDARD PLANS BOOK DATED 2010.

REVISED STANDARD PLAN RSP A87B

2010 REVISED STANDARD PLAN RSP A87B

6-27-13

Dist	COUNTY	ROUTE	POST MILES TOTAL PROJECT	SHEET No.	TOTAL SHEETS
04	Nap	29	47.0/47.2	77	146

REGISTERED CIVIL ENGINEER

April 20, 2012
PLANS APPROVAL DATE

REGISTERED PROFESSIONAL ENGINEER Gary Wang No. C58298 Exp. 6-30-12 CIVIL STATE OF CALIFORNIA

THE STATE OF CALIFORNIA OR ITS OFFICERS OR AGENTS SHALL NOT BE RESPONSIBLE FOR THE ACCURACY OR COMPLETENESS OF SCANNED COPIES OF THIS PLAN SHEET.

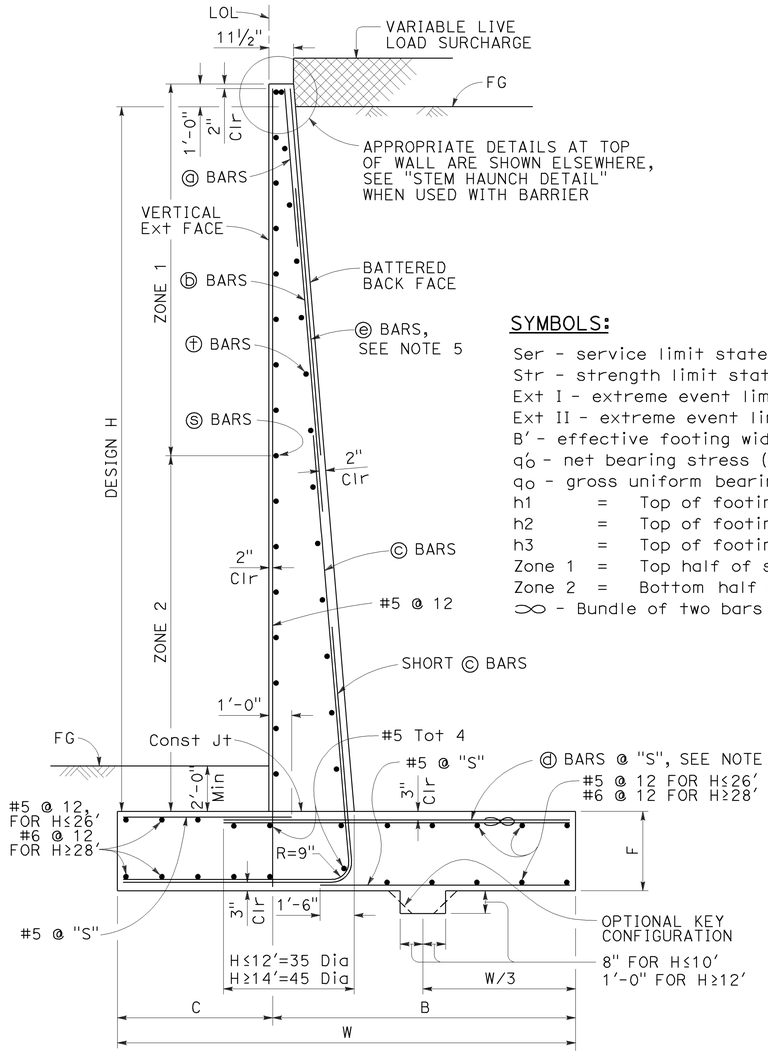

TYPICAL SECTION

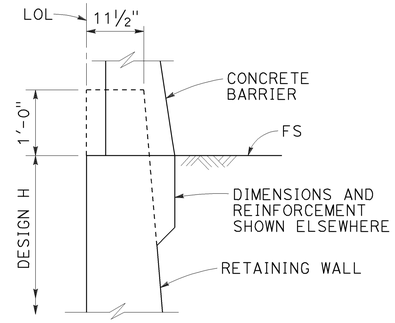

STEM HAUNCH DETAIL

SYMBOLS:

Ser - service limit state I
Str - strength limit state I
Ext I - extreme event limit state I
Ext II - extreme event limit state II
B' - effective footing width (ft)
q'_o - net bearing stress (ksf), OG assumed to be FG at toe
q_o - gross uniform bearing stress (ksf)
h1 = Top of footing to top of short ⓒ bar
h2 = Top of footing to top of ⓒ bar
h3 = Top of footing to top of ⓑ bar
Zone 1 = Top half of stem height
Zone 2 = Bottom half of stem height
∞ - Bundle of two bars

DESIGN CONDITIONS:

Design H may be exceeded by 6" before going to the next size. Special footing design is required where foundation material is incapable of supporting bearing stress listed in the table.

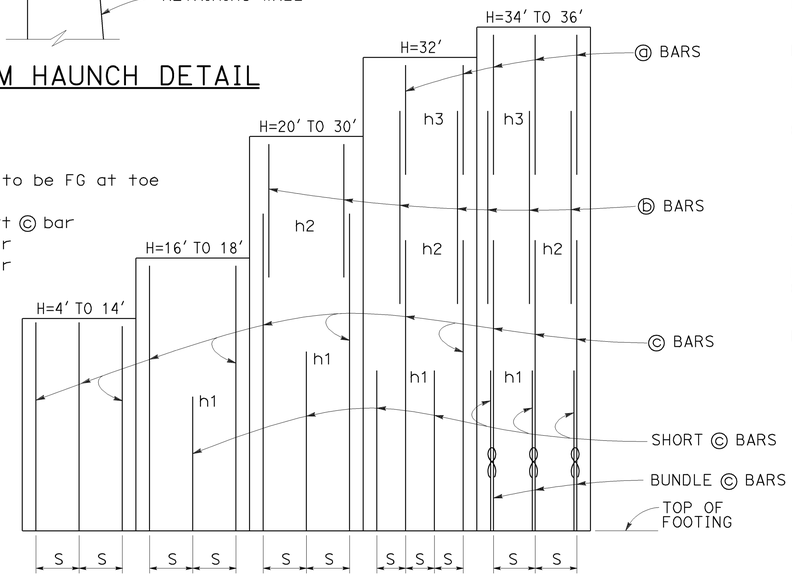

ELEVATION

DESIGN NOTES:

TO ACCOMPANY PLANS DATED 6-23-14

DESIGN: AASHTO LRFD Bridge Design Specifications, 4th Edition with California Amendments

LS: Varied surcharge on level ground surface

DC: Stem Architectural Treatment of thickness up to 6" of concrete (75 psf) considered

CT: 54 kip transverse force applied at He = 32", distributed over 10 feet at the top of wall and 1 : 1 distribution down and outward. Distribution below footing taken no less than 40'.

SEISMIC: $k_h = 0.2$, $k_v = 0.0$

SOIL: $\phi = 34°$, $\gamma = 120$ pcf

REINFORCED CONCRETE: f'c = 3,600 psi
fy = 60,000 psi

LOAD COMBINATIONS AND LIMIT STATES:

Service I	Q = 1.00DC+1.00EV+1.00EH+1.00LS
Strength I	Q = αDC+βEV+ηEH+1.75LS
Extreme I	Q = 1.00DC+1.00EV+1.00EH+1.00EQD+1.00EQE
Extreme II	Q = 1.00DC+1.00EV+1.00EH+1.00CT

Where:

Q:	Force Effects
α:	1.25 or 0.90, Whichever Controls Design
β:	1.35 or 1.00, Whichever Controls Design
η:	1.50 or 0.90, Whichever Controls Design
DC:	Dead Load of Structure Components
EH:	Horizontal Earth Fill Pressure
EV:	Vertical Earth Pressure from Earth Fill Weight
LS:	Live Load Surcharge
EQE:	Seismic Earth Pressure
EQD:	Soil and Structural and Nonstructural Components Inertia
CT:	Vehicular Collision Force

TABLE OF REINFORCING STEEL, DIMENSIONS AND DATA

DESIGN H	4'	6'	8'	10'	12'	14'	16'	18'	20'	22'	24'	26'	28'	30'	32'	34'	36'
W	6'-10"	7'-0"	7'-3"	7'-7"	8'-4"	9'-7"	10'-9"	12'-0"	13'-3"	14'-6"	15'-9"	17'-1"	18'-5"	19'-10"	21'-2"	22'-7"	24'-0"
C	2'-2"	2'-3"	2'-3"	2'-4"	2'-6"	3'-0"	3'-6"	4'-0"	4'-6"	5'-0"	5'-5"	6'-0"	6'-6"	7'-2"	7'-8"	8'-2"	9'-0"
B	4'-8"	4'-9"	5'-0"	5'-3"	5'-10"	6'-7"	7'-3"	8'-0"	8'-9"	9'-6"	10'-4"	11'-1"	11'-11"	12'-8"	13'-6"	14'-5"	15'-0"
F	1'-4"	1'-4"	1'-4"	1'-4"	1'-6"	1'-8"	1'-8"	1'-9"	1'-9"	1'-11"	2'-2"	2'-5"	2'-10"	3'-3"	3'-6"	4'-0"	4'-3"
BATTER	½: 12	½: 12	½: 12	½: 12	½: 12	½: 12	½: 12	½: 12	½: 12	½: 12	⅝: 12	⅝: 12	¾: 12	⅞: 12	1 : 12	1 : 12	1 : 12
SPACING "S"	9"	9"	9"	9"	9"	7"	6"	5"	6"	6"	6"	6"	6"	6"	6"	10"	8"
ⓐ BARS	-	-	-	-	-	-	-	-	-	-	-	-	-	-	#7	#7	#6
ⓑ BARS	-	-	-	-	-	-	-	-	#7	#7	#7	#7	#7	#7	#9	#9	#8
ⓒ BARS	#6	#6	#6	#6	#6	#6	#7	#7	#8	#9	#9	#10	#10	#10	#11	#11	#11
ⓓ BARS	#5	#5	#6	#6	#6	#6	#9	#8	#8	#9	#9	#10	#10	#10	#11	#11	#11
h1	-	-	-	-	-	-	5'-9"	5'-10"	8'-0"	9'-0"	10'-1"	11'-0"	12'-1"	13'-0"	13'-0"	12'-7"	11'-6"
h2	-	-	-	-	-	-	-	-	10'-5"	13'-0"	14'-7"	17'-6"	19'-0"	20'-5"	19'-0"	18'-0"	20'-2"
h3	-	-	-	-	-	-	-	-	-	-	-	-	-	-	21'-2"	21'-10"	24'-0"
ZONE 1 ⓢ BARS	#5 @ 18	#5 @ 18	#5 @ 18	#5 @ 18	#5 @ 18	#5 @ 18	#5 @ 18	#5 @ 18	#5 @ 18	#5 @ 18	#5 @ 12	#5 @ 12	#5 @ 12	#5 @ 12	#5 @ 12	#5 @ 12	#5 @ 12
ZONE 2 ⓢ BARS	#5 @ 18	#5 @ 18	#5 @ 18	#5 @ 18	#5 @ 18	#5 @ 18	#5 @ 12	#5 @ 12	#5 @ 12	#5 @ 12	#5 @ 12	#5 @ 12	#6 @ 12	#6 @ 12	#6 @ 12	#7 @ 12	#7 @ 12
ZONE 1 ⓣ BARS	#4 @ 18	#4 @ 18	#4 @ 18	#4 @ 18	#4 @ 18	#4 @ 18	#4 @ 18	#4 @ 18	#4 @ 18	#4 @ 18	#4 @ 12	#4 @ 12	#4 @ 18	#4 @ 12	#4 @ 12	#4 @ 12	#4 @ 12
ZONE 2 ⓣ BARS	#4 @ 18	#4 @ 18	#4 @ 18	#4 @ 18	#4 @ 18	#4 @ 18	#4 @ 18	#4 @ 18	#4 @ 18	#4 @ 18	#4 @ 12	#4 @ 12	#4 @ 12	#4 @ 12	#5 @ 12	#5 @ 12	#5 @ 12
Ser: B', q'_o	6.8, 0.7	6.5, 1.0	6.2, 1.3	6.0, 1.6	6.3, 2.0	7.5, 2.1	8.6, 2.2	9.8, 2.3	11.0, 2.4	12.1, 2.5	13.2, 2.8	14.4, 2.9	15.5, 3.1	16.8, 3.3	18.0, 3.5	19.2, 3.7	20.6, 3.7
Str: B', q_o	6.6, 1.6	5.0, 1.8	3.6, 2.3	3.0, 3.3	3.2, 4.0	4.3, 3.8	5.3, 3.7	6.4, 3.7	7.4, 3.8	8.2, 4.1	9.0, 4.4	9.9, 4.6	10.7, 4.9	11.7, 5.2	12.6, 5.4	13.6, 5.8	14.6, 5.9
Ext I: B', q_o	5.2, 1.1	4.7, 1.5	3.9, 2.2	3.1, 3.4	2.8, 4.8	3.2, 5.3	3.6, 5.7	4.1, 6.1	4.6, 6.4	5.0, 6.9	5.3, 7.6	5.8, 8.1	6.1, 8.9	6.7, 9.4	7.1, 10.0	7.5, 10.7	8.2, 10.9
Ext II: B', q_o	2.6, 2.2	2.7, 2.6	2.8, 3.1	2.9, 3.6	3.7, 3.6	5.2, 3.3	6.7, 3.1	8.3, 3.0	9.8, 3.0	11.2, 3.1	12.5, 3.2	13.9, 3.4	15.2, 3.6	16.7, 3.8	18.0, 4.0	19.3, 4.2	20.8, 4.3

NOTES:

1. For details not shown and drainage notes see RSP B3-5
2. For wall stem joint details see B0-3/3-3 and B0-3/3-4
3. At ⓒ bars:
   H ≤ 6', no splices are allowed within 1'-8" above the top of footing.
   H > 6', no splices are allowed within H/4 above the top of footing.
4. Bundle ⓓ bars for H = 34' & 36'.
5. Provide #6 @ 10" x 15'-0" ⓔ bars over a distance of 8'-0" measured from all expansion joints, begin wall and end wall locations. For H ≤ 14', hook ⓔ bar into footing and reduce bar length as needed to maintain Min Clr cover.

STATE OF CALIFORNIA
DEPARTMENT OF TRANSPORTATION

RETAINING WALL TYPE 1 (CASE 1)

NO SCALE

RSP B3-1A DATED APRIL 20, 2012 SUPPLEMENTS THE STANDARD PLANS BOOK DATED 2010.

REVISED STANDARD PLAN RSP B3-1A

2010 REVISED STANDARD PLAN RSP B3-1A

2-22-12

Dist	COUNTY	ROUTE	POST MILES TOTAL PROJECT	SHEET No.	TOTAL SHEETS
04	Nap	29	47.0/47.2	78	146

REGISTERED CIVIL ENGINEER

November 15, 2013
PLANS APPROVAL DATE

REGISTERED PROFESSIONAL ENGINEER — Tillat Satter — No. C42892 — Exp. 3-31-14 — CIVIL — STATE OF CALIFORNIA

THE STATE OF CALIFORNIA OR ITS OFFICERS OR AGENTS SHALL NOT BE RESPONSIBLE FOR THE ACCURACY OR COMPLETENESS OF SCANNED COPIES OF THIS PLAN SHEET.

TO ACCOMPANY PLANS DATED 6-23-14

2010 REVISED STANDARD PLAN RSP B11-56

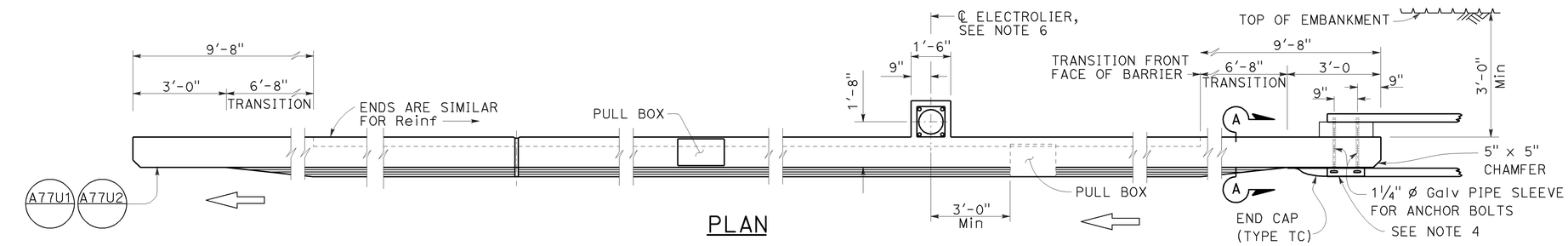

PLAN

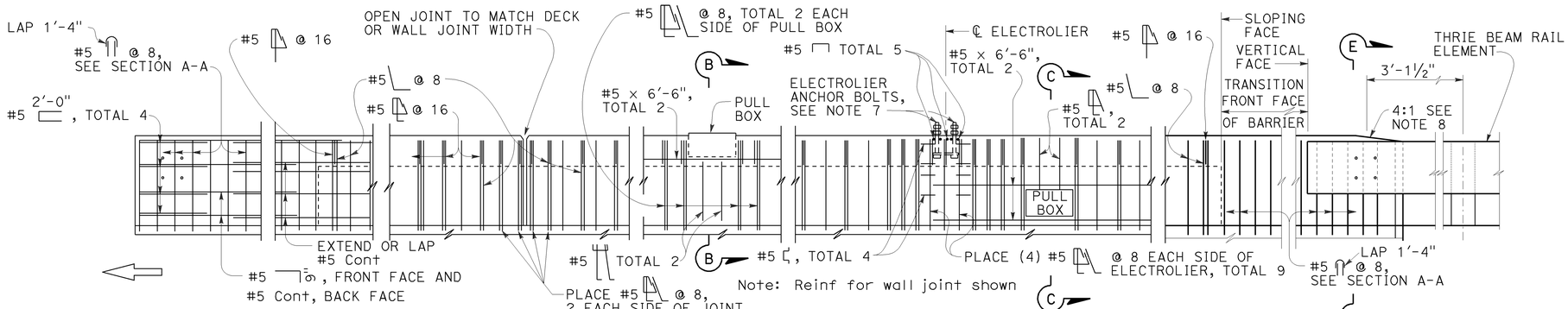

ELEVATION

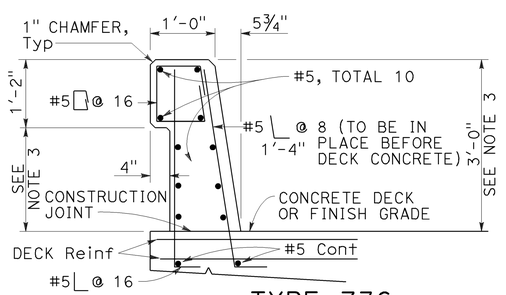

TYPE 736

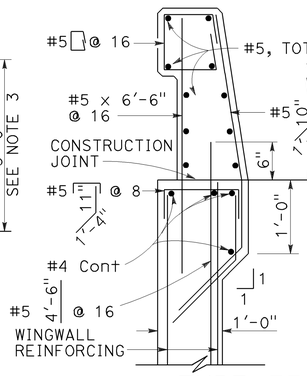

TYPE 736A

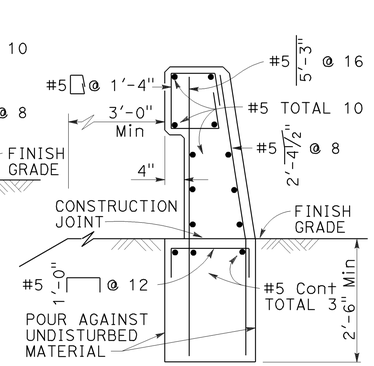

TYPE 736B

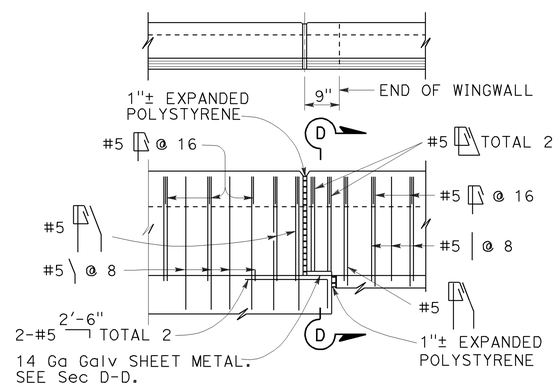

TYPE 736A TYPE 736B

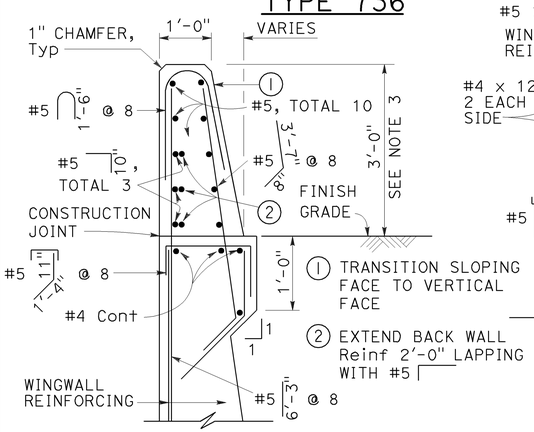

SECTION A-A

Details shown for barrier anchorage to Type 736A. Anchorgae for barrier Types 736 and 736B are similar to their respective details.

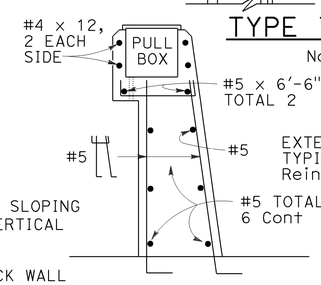

SECTION B-B

Note: Types 736A & 736B are similar to Type 736 except as noted

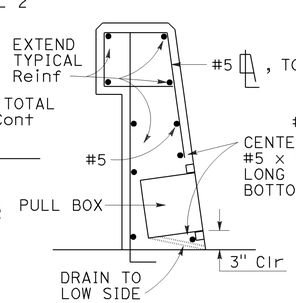

SECTION C-C

See Notes

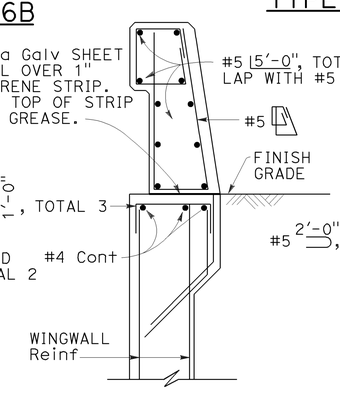

SECTION D-D

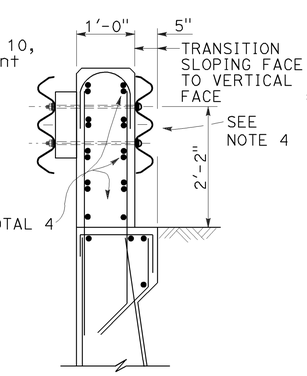

SECTION E-E

See Notes

NOTES:

1. Walls are to be backfilled before barrier is placed.
2. Clearance to reinforcing steel in barrier to be 1", except as noted. Longitudinal reinforcement to stop at all expansion joints.
3. Dimensions may vary with roadway cross slope and with certain thickness of surfacing. See Project Plans.
4. For typical metal railing connection details not shown, see Revised Standard Plans RSP A77U1 and RSP A77U2.
5. See Standard Plans ES-9A, ES-9B, ES-9C, ES-9D and ES-9E for electrical details. The maximum number of conduits in the barrier is limited to two 2" conduits along with one 3" conduit. When a 3" conduit is used, it is restricted to the base of the barrier.
6. For electrolier mounting details, See Standard Plans ES-6A and ES-6B.
7. Minimum concrete edge distance, to the reinforcing shown, shall be maintained. Edge distance may be adjusted to accommodate increase in concrete cover for architectual treatment.
8. Taper the top of the end of the bridge railing at 4:1 to match the top elevation of the thrie beam rail element.

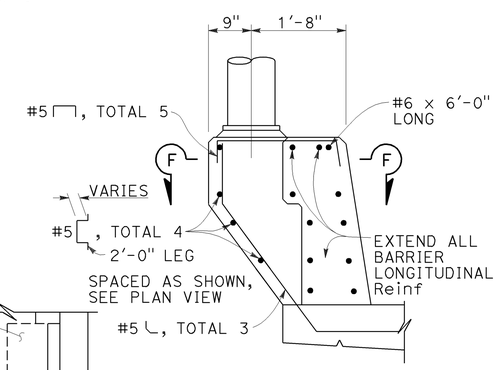

PEDESTAL ELEVATION

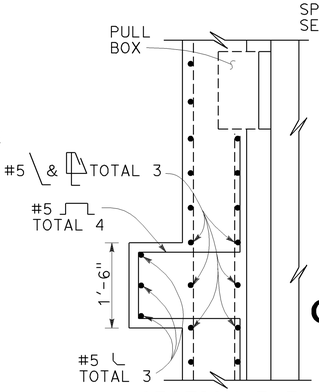

SECTION F-F

STATE OF CALIFORNIA
DEPARTMENT OF TRANSPORTATION

CONCRETE BARRIER TYPE 736

NO SCALE

RSP B11-56 DATED NOVEMBER 15, 2013 SUPERSEDES RSP B11-56 DATED JULY 19, 2013 AND STANDARD PLAN B11-56 DATED MAY 20, 2011 - PAGE 298 OF THE STANDARD PLANS BOOK DATED 2010.

REVISED STANDARD PLAN RSP B11-56

10-4-13

Dist	COUNTY	ROUTE	POST MILES TOTAL PROJECT	SHEET No.	TOTAL SHEETS
04	Nap	29	47.0/47.2	79	146

REGISTERED CIVIL ENGINEER

November 15, 2013
PLANS APPROVAL DATE

REGISTERED PROFESSIONAL ENGINEER
Tillat Satter
No. C42892
Exp. 3-31-14
CIVIL
STATE OF CALIFORNIA

THE STATE OF CALIFORNIA OR ITS OFFICERS OR AGENTS SHALL NOT BE RESPONSIBLE FOR THE ACCURACY OR COMPLETENESS OF SCANNED COPIES OF THIS PLAN SHEET.

TO ACCOMPANY PLANS DATED 6-23-14

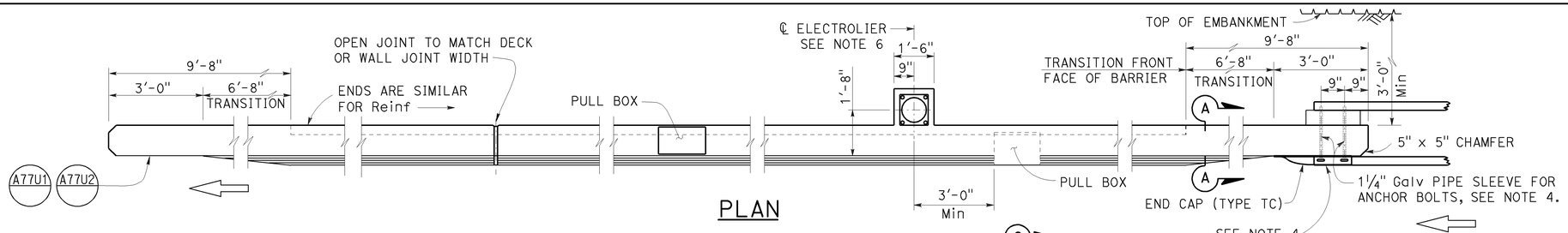

PLAN

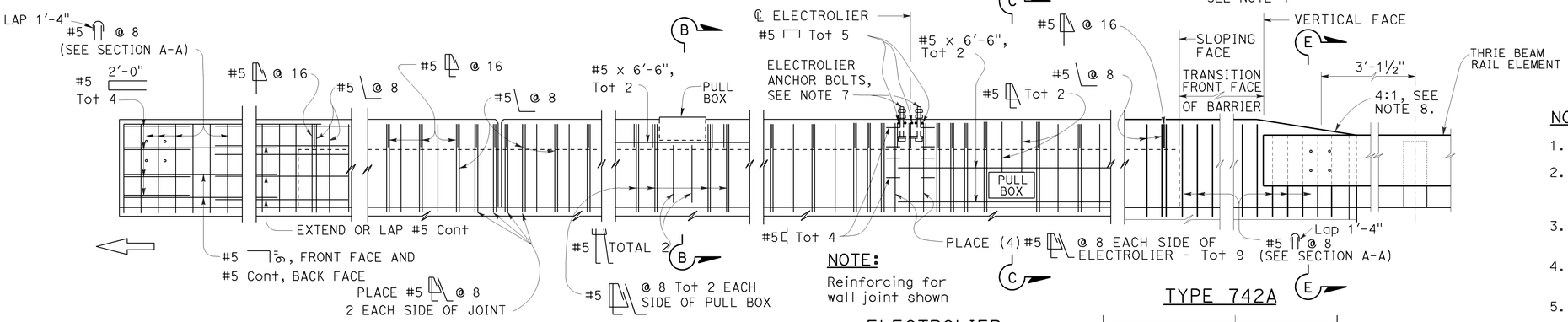

METAL RAILING CONNECTION

DECK OR WALL JOINT

NOTE:
Reinforcing for wall joint shown

ELEVATION

ELECTROLIER
(See Note 5)

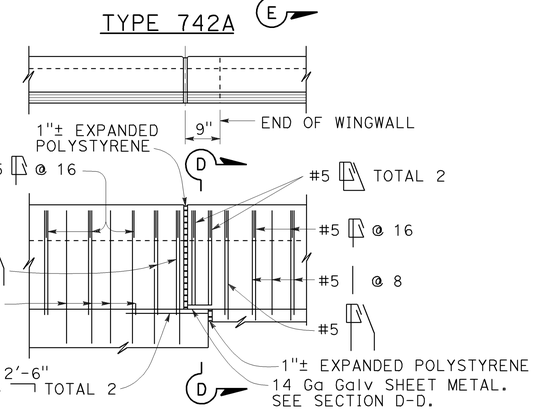

TYPE 742A

NOTES:

1. Walls are to be backfilled before barrier is placed.
2. Clearance to reinforcing steel in barrier to be 1", except as noted. Longitudinal reinforcement to stop at all expansion joints.
3. Dimensions may vary with roadway cross slope and with certain thickness of surfacing. See Project Plans.
4. For typical metal railing connection details not shown, see Revised Standard Plans RSP A77U1 and RSP A77U2.
5. See Standard Plans ES-9A, ES-9B, ES-9C, ES-9D and ES-9E for electrical details. The maximum number of conduits in the barrier is limited to two 2" conduits along with one 3" conduit. When a 3" conduit is used, it is restricted to the base of the barrier.
6. For electrolier mounting details, See Standard Plans ES-6A and ES-6B.
7. Minimum concrete edge distance, to the reinforcing shown, shall be maintained. Edge distance may be adjusted to accommodate increase in concrete cover for architectual treatment.
8. Taper the top of the end of the bridge railing at 4:1 to match the top elevation of the thrie beam rail element.

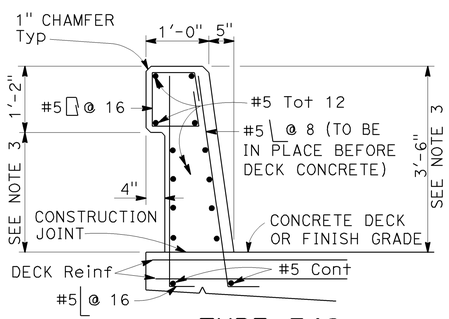

TYPE 742

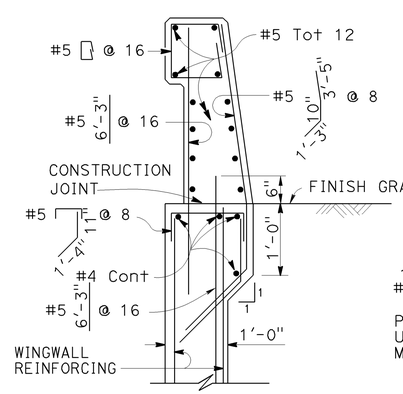

TYPE 742A

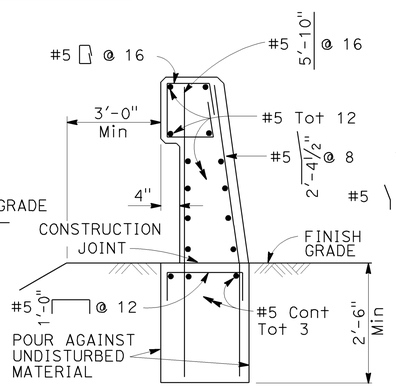

TYPE 742B

NOTE:
Types 742A & 742B are similar to Type 742 except as noted

TYPE 742A TYPE 742B

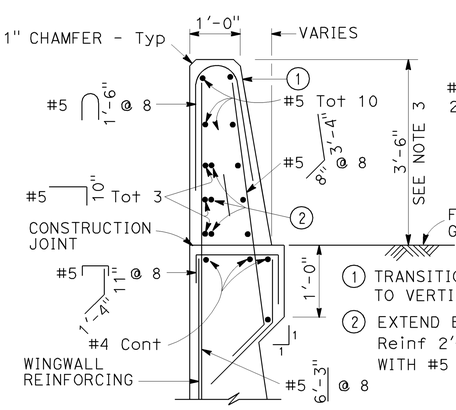

SECTION A-A

Details shown for barrier anchorage to Type 742A. Anchorage for barrier Types 742 and 742A are similar to their respective details.

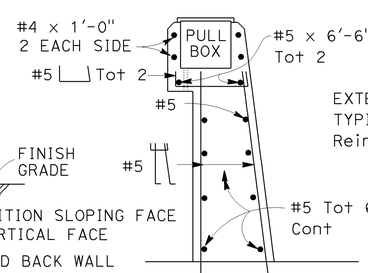

SECTION B-B

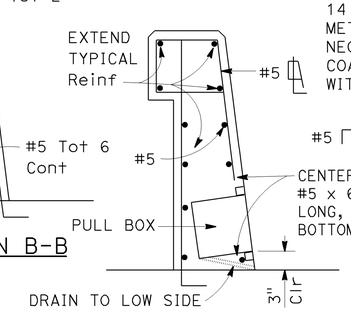

SECTION C-C
See Notes

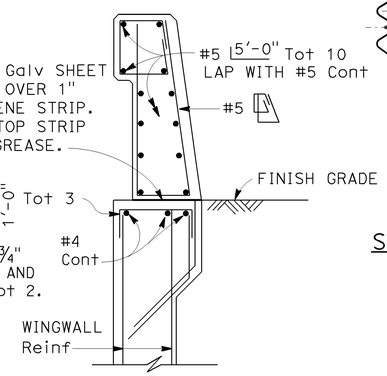

SECTION D-D

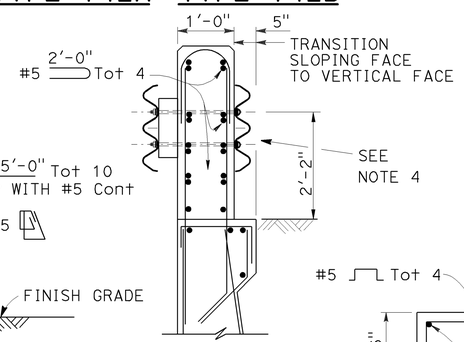

SECTION E-E
See Note 4

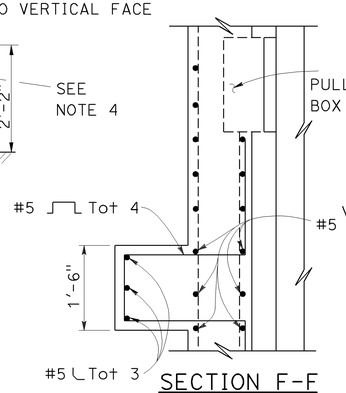

SECTION F-F

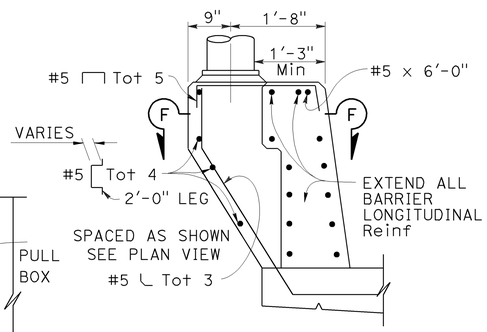

PEDESTAL ELEVATION

STATE OF CALIFORNIA
DEPARTMENT OF TRANSPORTATION

CONCRETE BARRIER TYPE 742

NO SCALE

RSP B11-57 DATED NOVEMBER 15, 2013 SUPERSEDES RSP B11-57 DATED JULY 19, 2013 AND STANDARD PLAN B11-57 DATED MAY 20, 2011 - PAGE 299 OF THE STANDARD PLANS BOOK DATED 2010.

REVISED STANDARD PLAN RSP B11-57

2010 REVISED STANDARD PLAN RSP B11-57

10-4-13

TO ACCOMPANY PLANS DATED 6-23-14

Dist	COUNTY	ROUTE	POST MILES TOTAL PROJECT	SHEET No.	TOTAL SHEETS
04	Nap	29	47.0/47.2	80	146

REGISTERED CIVIL ENGINEER

October 19, 2012
PLANS APPROVAL DATE

REGISTERED PROFESSIONAL ENGINEER Glenn DeCou No. C34547 Exp. 9-30-13 CIVIL STATE OF CALIFORNIA

THE STATE OF CALIFORNIA OR ITS OFFICERS OR AGENTS SHALL NOT BE RESPONSIBLE FOR THE ACCURACY OR COMPLETENESS OF SCANNED COPIES OF THIS PLAN SHEET.

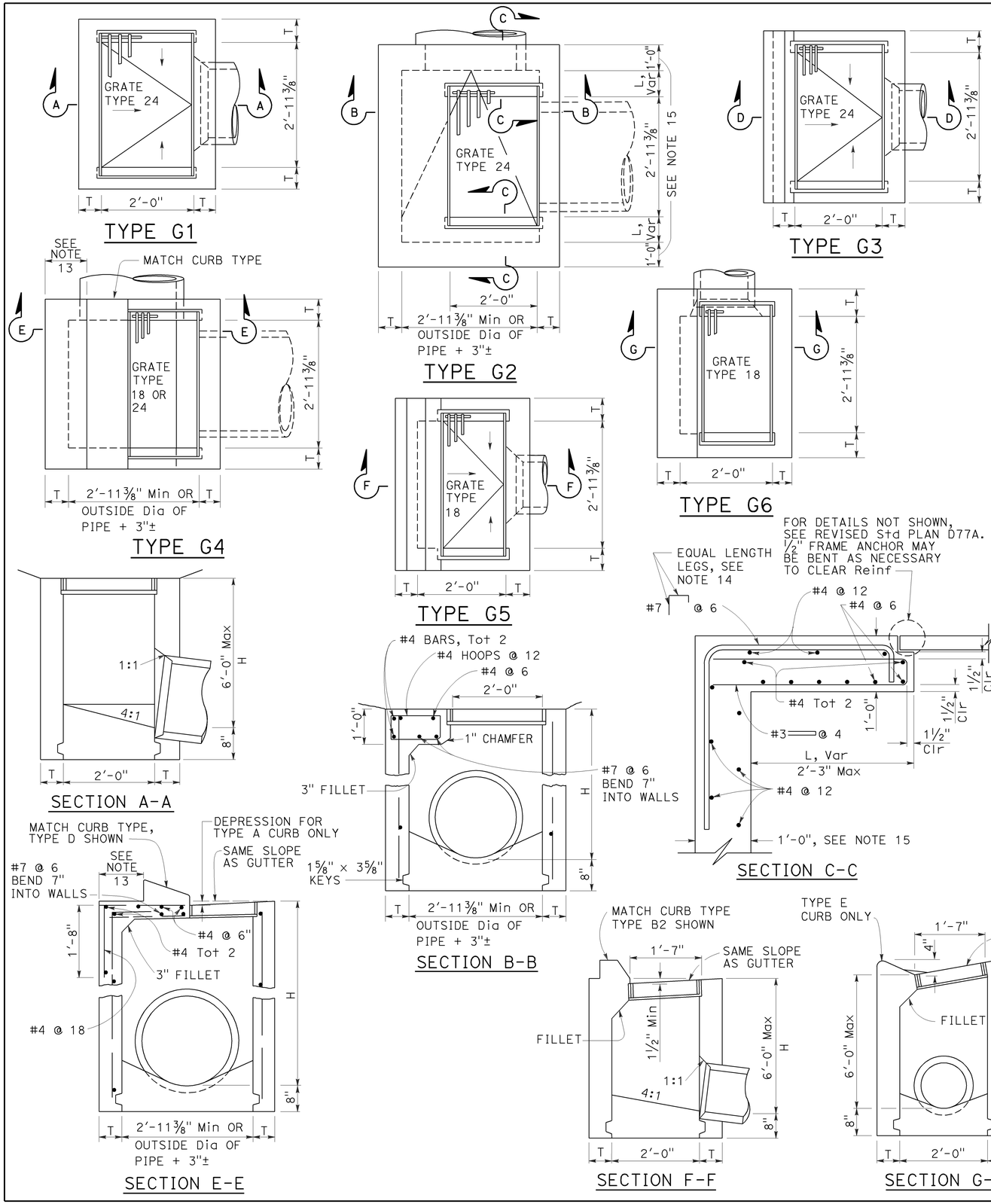

NOTES:

1. "H" is the difference in elevation between the outlet pipe flow line and the normal gutter grade line undepressed.
2. For "T" wall thickness, see Table A below.
3. Wall reinforcing not required when "H" is 8'-0" or less and the unsupported width or length is 7'-0" or less. Walls exceeding these limits shall be reinforced with #4 bars @ 1'-6" ± centers placed 1½" clear to inside of box unless otherwise shown.
4. Inlet bottom reinforcing not required. See Standard Plan D74C for alternative reinforced bottom and alternative half round bottom.
5. Steps-None required where "H" is less than 2'-6". Where "H" is 2'-6" or more, install steps with lowest rung 1'-0" above the floor and highest rung not more than 6" below top of inlet. The distance between steps shall not exceed 1'-0" and shall be uniform throughout the length of the wall. Place steps in the wall without an opening. Steps inserts may be substituted for the bar steps. Step inserts shall comply with State Industrial Safety requirements. See Standard Plan D74C for step details.
6. Details shown apply to both metal and concrete pipe.
7. Pipe(s) can be placed in any wall.
8. Curb section shall match adjacent curb.
9. Basin floors shall have wood trowel finish and a minimum slope of 12:3 from all directions toward outlet pipe.
10. Set inlet so that grate bars are parallel to direction of principal surface flow.
11. See Revised Standard Plans D77A and D77B for grate and frame details and weights of miscellaneous iron and steel.
12. See Standard Plan D78A for gutter depression details.
13. This dimenison will vary with different grates, curbs types, box width and wall thickness.
14. Bar may be rotated as necessary to clear opening. Where "L" is 6" or less, bar may be omitted.
15. Where "L" is 6" or less, wall thickness shall be as shown in Table A.
16. Cast-in-place inlets to be formed around all pipes/stubs intersecting the inlet, and concrete poured in one continuous operation. Precast inlets shall have mortared connections conforming to details for Type GCP Inlet shown on Standard Plan D75B. See Standard Specifications for mortar composition.

TABLE A

CONCRETE QUANTITIES				
TYPE	H=3'-0" TO 8'-0" (T=6")		H=8'-1" TO 20'-0" (T=8")	
	H=3'-0" (CY)	ADDITIONAL PCC PER FOOT (CY)	H=8'-1" (CY)	ADDITIONAL PCC PER FOOT (CY)
G-1	0.95	0.220	See Note A	SEE NOTE A
G-2*	1.31	0.255	3.50	0.357
G-3	1.03	0.220	See Note A	SEE NOTE A
G-4* (TYPE 24)	1.27	0.255	3.48	0.357
G-4* (TYPE 18)	1.30	0.255	3.50	0.357
G-5	1.02	0.220	SEE NOTE A	SEE NOTE A
G-6	1.04	0.220	SEE NOTE A	SEE NOTE A

TABLE BASED ON 8" FLOOR SLAB. NO DEDUCTIONS ARE TO BE MADE TO THESE QUANTITIES BECAUSE OF PIPE OPENINGS, DIFFERENT FLOOR ALTERNATIVES OR DIFFERENT CURB TYPES. * QUANTITIES FOR TYPE G-2 AND G-4 INLETS BASED ON THE MINIMUM INTERIOR DIMENSIONS.

NOTE A:

Maximum allowable height 6'-0".

STATE OF CALIFORNIA
DEPARTMENT OF TRANSPORTATION

DRAINAGE INLETS

NO SCALE

RSP D73 DATED OCTOBER 19, 2012 SUPERSEDES STANDARD PLAN D73 DATED MAY 20, 2011 - PAGE 156 OF THE STANDARD PLANS BOOK DATED 2010.

REVISED STANDARD PLAN RSP D73

2010 REVISED STANDARD PLAN RSP D73

7-19-12

Dist	COUNTY	ROUTE	POST MILES TOTAL PROJECT	SHEET No.	TOTAL SHEETS
04	Nap	29	47.0/47.2	81	146

Raymond Don Tsztoo
REGISTERED CIVIL ENGINEER

April 19, 2013
PLANS APPROVAL DATE

REGISTERED PROFESSIONAL ENGINEER
Raymond Don Tsztoo
No. C37332
Exp. 6-30-14
CIVIL
STATE OF CALIFORNIA

THE STATE OF CALIFORNIA OR ITS OFFICERS OR AGENTS SHALL NOT BE RESPONSIBLE FOR THE ACCURACY OR COMPLETENESS OF SCANNED COPIES OF THIS PLAN SHEET.

TO ACCOMPANY PLANS DATED 6-23-14

2010 REVISED STANDARD PLAN RSP D77B

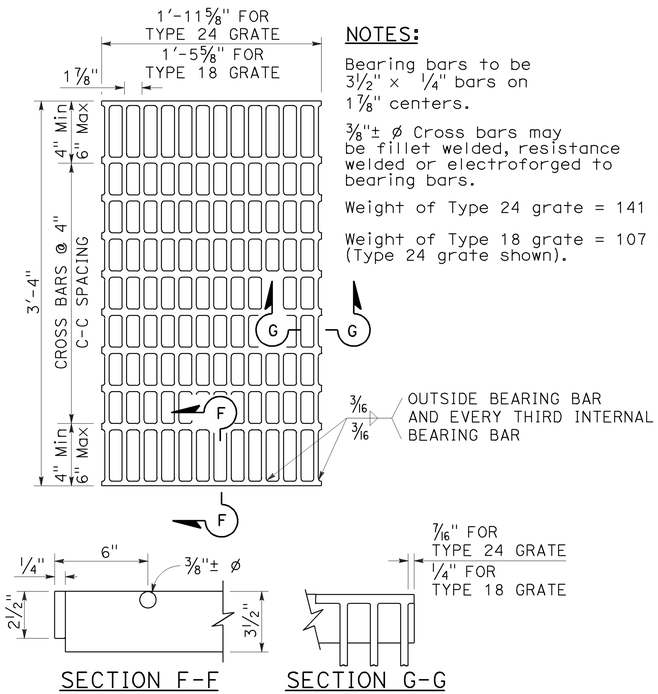

NOTES:

Bearing bars to be 3½" × ¼" bars on 1⅞" centers.

⅜"± ø Cross bars may be fillet welded, resistance welded or electroforged to bearing bars.

Weight of Type 24 grate = 141 LBS.

Weight of Type 18 grate = 107 LBS. (Type 24 grate shown).

TYPE 18-10 AND 24-13 GRATE

(Welded Steel)

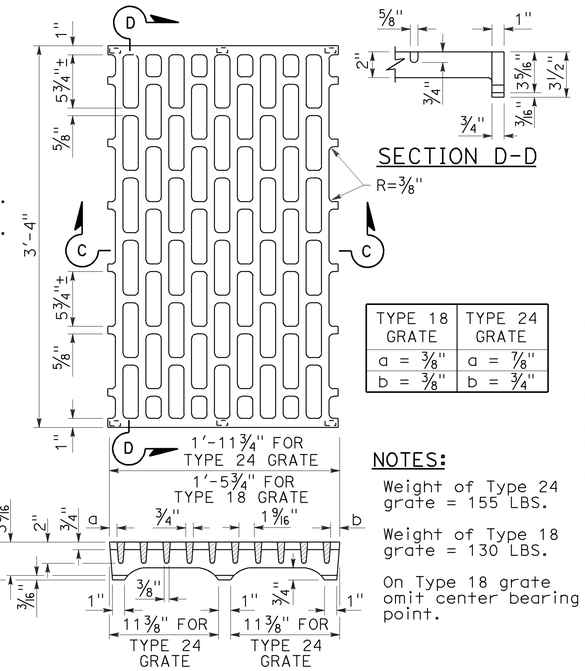

TYPE 18 GRATE	TYPE 24 GRATE
a = ⅜"	a = ⅞"
b = ⅜"	b = ¾"

NOTES:

Weight of Type 24 grate = 155 LBS.

Weight of Type 18 grate = 130 LBS.

On Type 18 grate omit center bearing point.

TYPE 18-8C AND 24-10C GRATE

(Cast ductile iron)

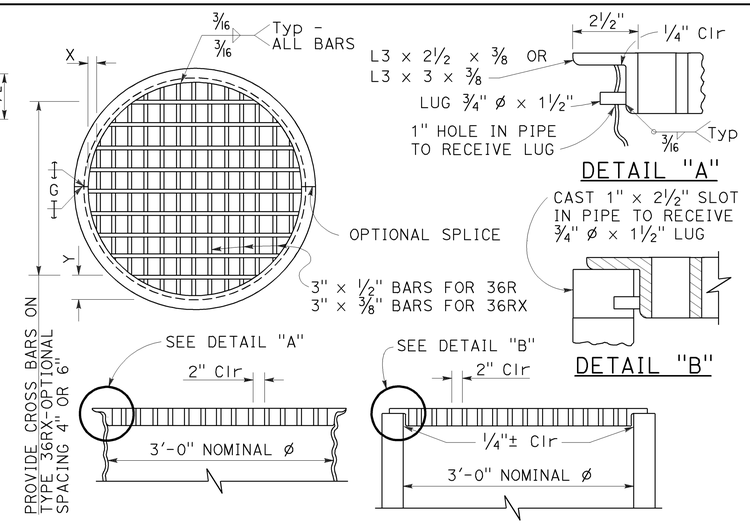

TYPE 36R AND 36RX GRATE DETAILS

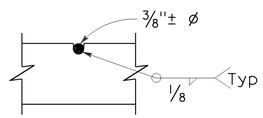

⅜"± ø Cross bars may be fillet welded, resistance welded or electroforged to bearing bars.

CROSS BAR DETAIL TYPE 36RX GRATE (WELDED STEEL)

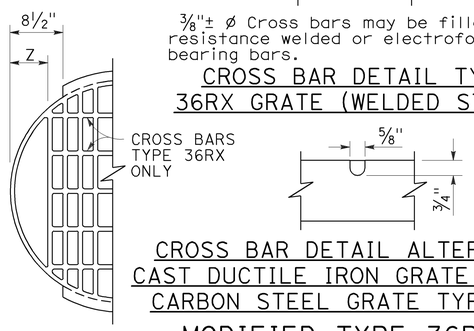

CROSS BAR DETAIL ALTERNATIVE CAST DUCTILE IRON GRATE OR CAST CARBON STEEL GRATE TYPE 36RX

MODIFIED TYPE 36R AND 36RX GRATE FOR ODI INLET

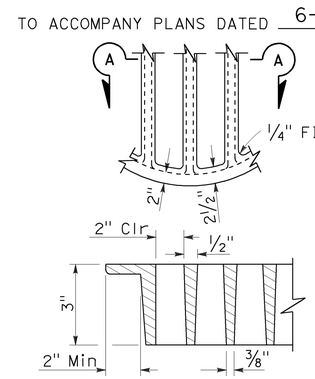

ALTERNATIVE CAST DUCTILE IRON GRATE OR CAST CARBON STEEL GRATE TYPE 36R AND 36RX

BASIS FOR Misc IRON AND STEEL FINAL PAY WEIGHTS FOR DRAINAGE INLETS

INLET TYPE	GRATE TYPE	No. OF GRATES	WEIGHT LB
GDO (SEE NOTE 4)	24-10C	2	391
	24-10S	2	456
	24-12X	2	473
	24-13	2	374
GO,GOL,G1,G2, G3,G4 (TYPE 24)	24-10C	1	202
	24-10S	1	229
	24-12X	1	239
	24-13	1	188
G4 (TYPE 18) G5,G6	18-8S	1	187
	18-9X	1	187
	18-10	1	149
GT1,GT2	18-8S	2	374
	18-9X	2	374
	18-10	2	298
GT3,GT4	24-10C	2	404
	24-10S	2	458
	24-12X	2	478
	24-13	2	376
ODI	36RX (Mod)	1	196
GMP,GCP,GCPI	36RX	1	215
ODI	36R (Mod)	1	220
GMP,GCP,GCPI	36R	1	236
TRASH RACK			22
GRATE CHAIN			3

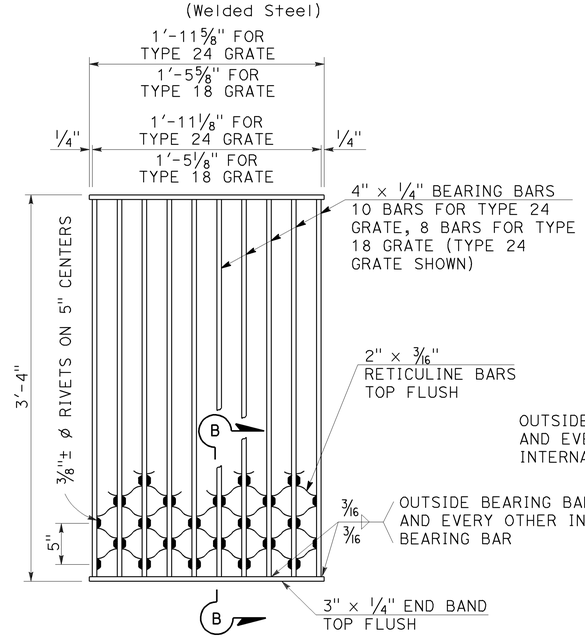

NOTES:

Weight of Type 24 grate = 182 LBS.
Weight of Type 18 grate = 145 LBS.

TYPE 18-8S AND 24-10S GRATE

(Welded Steel) Reticuline type

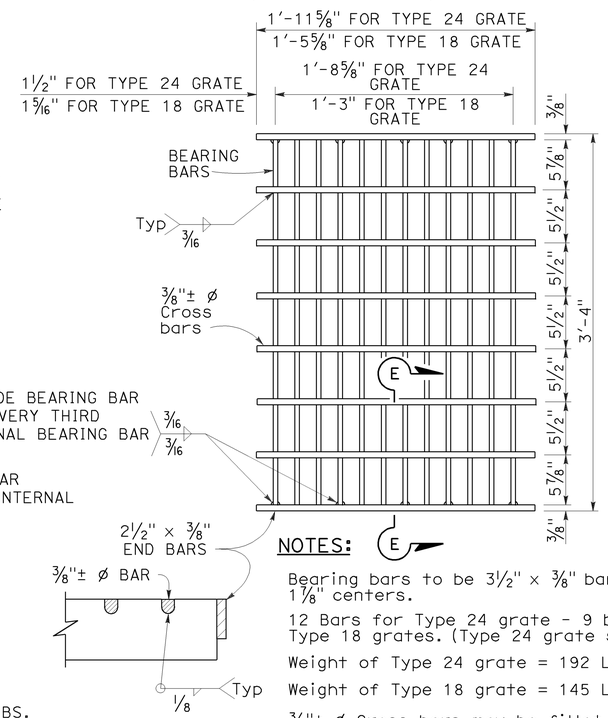

NOTES:

Bearing bars to be 3½" × ⅜" bars on 1⅞" centers.

12 Bars for Type 24 grate - 9 bars for Type 18 grates. (Type 24 grate shown).

Weight of Type 24 grate = 192 LBS.

Weight of Type 18 grate = 145 LBS.

⅜"± ø Cross bars may be fillet welded, resistance welded or electroforged to bearing bars.

TYPE 18-9X AND 24-12X GRATE

(Welded Steel)

NOTES:

1. When alternative grates are allowed - Final pay based on alternative with the lesser weight.
2. Use frame shown on Standard Plan D74A, D74B or RSP D77A as appropriate.
3. When Type 24-10S, 24-12X or 24-13 grates are used with GDO Inlets, a ¼" × 3½" × 3'-4⅞" steel bar shall be welded across the center of inlet frame to separate the individual grates.
4. See Revised Standard Plan RSP D77A for connecting chain to welded grate and frame. When chain is required, do not use cast ductile iron grate.

GRATE BAR SPACING TABLE

TYPE	No. OF BARS	CLEAR BAR SPACING	X	Y 4" SPACING	Y 6" SPACING	Z
36R	13	2"	2⅛"	-	-	-
36RX (STEEL)	15	2"	9/16"	3¾"	5¾"	-
36RX (CAST)	13	2"	2⅛"	3¾"	5¾"	-
36R Mod	12	2"	2⅛"	-	-	5"
36RX Mod (STEEL)	13	2"	9/16"	3¾"	5¾"	5 11/16"
36RX Mod (CAST)	12	2"	2⅛"	3¾"	5¾"	5"

STATE OF CALIFORNIA
DEPARTMENT OF TRANSPORTATION

GRATE DETAILS No. 2

NO SCALE

RSP D77B DATED APRIL 19, 2013 SUPERSEDES RSP D77B DATED JULY 20, 2012 AND STANDARD PLAN D77B DATED MAY 20, 2011 - PAGE 165 OF THE STANDARD PLANS BOOK DATED 2010.

REVISED STANDARD PLAN RSP D77B

4-4-13

Dist	COUNTY	ROUTE	POST MILES TOTAL PROJECT	SHEET No.	TOTAL SHEETS
04	Nap	29	47.0/47.2	82	146

Theresa Gabriel
REGISTERED ELECTRICAL ENGINEER

July 19, 2013
PLANS APPROVAL DATE

REGISTERED PROFESSIONAL ENGINEER
Theresa Aziz Gabriel
No. E15129
Exp. 6-30-14
ELECTRICAL
STATE OF CALIFORNIA

THE STATE OF CALIFORNIA OR ITS OFFICERS OR AGENTS SHALL NOT BE RESPONSIBLE FOR THE ACCURACY OR COMPLETENESS OF SCANNED COPIES OF THIS PLAN SHEET.

TO ACCOMPANY PLANS DATED 6-23-14

LEGEND:

AB	ABANDON. IF APPLIED TO CONDUIT, REMOVE CONDUCTORS
BC	INSTALL PULL BOX IN EXISTING CONDUIT RUN
BP	PEDESTRIAN BARRICADE, TYPE AS INDICATED ON PLAN
CB	INSTALL CONDUIT INTO EXISTING PULL BOX
CC	CONNECT NEW AND EXISTING CONDUIT. REMOVE EXISTING CONDUCTORS AND INSTALL CONDUCTORS AS INDICATED
CF	CONDUIT TO REMAIN FOR FUTURE USE. REMOVE CONDUCTORS. INSTALL PULL TAPE
DH	DETECTOR HANDHOLE
FA	FOUNDATION TO BE ABANDONED
IS	INSTALL SIGN ON SIGNAL MAST ARM
NS	NO SLIP BASE ON STANDARD
PEC	PHOTOELECTRIC CONTROL
PEU	PHOTOELECTRIC UNIT
RC	EQUIPMENT OR MATERIAL TO BE REMOVED AND BECOME THE PROPERTY OF THE CONTRACTOR
RE	REMOVE ELECTROLIER, FUSES AND BALLAST. TAPE ENDS OF CONDUCTORS
RL	RELOCATE EQUIPMENT
RR	REMOVE AND REUSE EQUIPMENT
RS	REMOVE AND SALVAGE EQUIPMENT
SC	SPLICE NEW TO EXISTING CONDUCTORS
SD	SERVICE DISCONNECT
TSP	TELEPHONE SERVICE POINT

ABBREVIATIONS

APS	ACCESSIBLE PEDESTRIAN SIGNAL
BBS	BATTERY BACKUP SYSTEM
BC	BOLT CIRCLE
BPB	BICYCLE PUSH BUTTON
C	CONDUIT
CB	CIRCUIT BREAKER
CCTV	CLOSED CIRCUIT TELEVISION
Ckt	CIRCUIT
CMS	CHANGEABLE MESSAGE SIGN
Ctid	CALTRANS IDENTIFICATION
Comm	COMMUNICATION
DLC	LOOP DETECTOR LEAD-IN CABLE
EMS	EXTINGUISHABLE MESSAGE SIGN
EVUC	EMERGENCY VEHICLE UNIT CABLE
EVUD	EMERGENCY VEHICLE UNIT DETECTOR
FB	FLASHING BEACON
FBCA	FLASHING BEACON CONTROL ASSEMBLY
FBS	FLASHING BEACON WITH SLIP BASE
FO	FIBER OPTIC
G	EQUIPMENT GROUNDING CONDUCTOR
GB	GROUND BUS
GFCI	GROUND FAULT CIRCUIT INTERRUPTER
HAR	HIGHWAY ADVISORY RADIO
Hex	HEXAGONAL
HPS	HIGH PRESSURE SODIUM
IISNS	INTERNALLY ILLUMINATED STREET NAME SIGN
ISL	INDUCTION SIGN LIGHTING
LED	LIGHT EMITTING DIODE
LMA	LUMINAIRE MAST ARM
LPS	LOW PRESSURE SODIUM
Ltg	LIGHTING
Lum	LUMINAIRE
M	METERED
MAT	MAST ARM MOUNTING TOP ATTACHMENT
MAS	MAST ARM MOUNTING SIDE ATTACHMENT
M/M	MULTIPLE TO MULTIPLE TRANSFORMER
Mtg	MOUNTING
MV	MERCURY VAPOR LIGHTING FIXTURE
MVDS	MICROWAVE VEHICLE DETECTION SYSTEM
N	NEUTRAL (GROUNDED CONDUCTOR)
NB	NEUTRAL BUS
NC	NORMALLY CLOSE
NO	NORMALLY OPEN
P	CIRCUIT BREAKER'S POLE
PB	PULL BOX
PBA	PUSH BUTTON ASSEMBLY
PEC	PHOTOELECTRIC CONTROL
Ped	PEDESTRIAN
PEU	PHOTOELECTRIC UNIT
PT	CONDUIT WITH PULL TAPE
RE	RELOCATED EQUIPMENT
RM	RAMP METERING
RWIS	ROADSIDE WEATHER INFORMATION SYSTEM
SB	SLIP BASE
SIC	SIGNAL INTERCONNECT CABLE
Sig	SIGNAL
SMA	SIGNAL MAST ARM
SNS	STREET NAME SIGN
SP	SERVICE POINT
TDC	TELEPHONE DEMARCATION CABINET
TMS	TRAFFIC MONITORING STATION
TOS	TRAFFIC OPERATIONS SYSTEM
Veh	VEHICLE
VIVDS	VIDEO IMAGE VEHICLE DETECTION SYSTEM
WIM	WEIGH-IN-MOTION
Xfmr	TRANSFORMER

SOFFIT AND WALL MOUNTED LUMINAIRES

PENDANT, 70 W HPS UNLESS OTHERWISE SPECIFIED

FLUSH, 70 W HPS UNLESS OTHERWISE SPECIFIED

WALL SURFACE, 70 W HPS UNLESS OTHERWISE SPECIFIED

EXISTING SOFFIT OR WALL LUMINAIRE TO REMAIN UNMODIFIED

EXISTING SOFFIT OR WALL LUMINAIRE TO BE MODIFIED AS SPECIFIED

NOTE:

Arrow indicates "street side" of luminaire.

COMMONLY USED SYMBOLS FOR UNITED STATES CUSTOMARY UNITS OF MEASUREMENT:

SYMBOL USED	DEFINITIONS
Ω	OHMS
min	MINUTE
s	SECOND
bps	BITS PER SECOND
Bps	BYTES PER SECOND
A	AMPERE
V	VOLT
V(dc)	VOLT (DIRECT CURRENT)
V(ac)	VOLT (ALTERNATING CURRENT)
FC	FOOT - CANDLE
W	WATTS
VA	VOLT-AMPERE
M	MEGA
k	KILO
m	MILLI
μ	MICRO
P	PICO
Hz	HERTZ

MISCELLANEOUS ELECTROLIERS

NEW	EXISTING	
		LUMINAIRE ON WOOD POLE
		NON-STANDARD ELECTROLIER (SEE PROJECT NOTES OR PROJECT PLANS)
		CITY ELECTROLIER
		ELECTROLIER FOUNDATION (FUTURE INSTALLATION)

NOTES:

1. HPS luminaires shall be 310 W HPS when installed on Type 21, 21D, 30, 31 and 32 Standards, unless otherwise specified. HPS luminaires shall be 200 W when installed on other type standards or poles, unless otherwise specified.
2. LED luminaires shall be 235 W when installed on Type 21, 21D, 30, 31 and 32 Standards, unless otherwise specified. LED luminaires shall be 165 W when installed on other type standards or poles, unless otherwise specified.
3. Luminaires shall be the cutoff type, ANSI Type III medium cutoff lighting distribution, unless otherwise specified.

STANDARD ELECTROLIER

NEW	EXISTING	STANDARD TYPE
		15
		15D
		15 STRUCTURE
		15D STRUCTURE
		21
		21D
		21 STRUCTURE
		21D STRUCTURE
		30
		31
		32

STATE OF CALIFORNIA
DEPARTMENT OF TRANSPORTATION

ELECTRICAL SYSTEMS (LEGEND AND ABBREVIATIONS)

NO SCALE

RSP ES-1A DATED JULY 19, 2013 SUPERSEDES STANDARD PLAN ES-1A DATED MAY 20, 2011 - PAGE 425 OF THE STANDARD PLANS BOOK DATED 2010.

REVISED STANDARD PLAN RSP ES-1A

2010 REVISED STANDARD PLAN RSP ES-1A

Dist	COUNTY	ROUTE	POST MILES TOTAL PROJECT	SHEET No.	TOTAL SHEETS
04	Nap	29	47.0/47.2	83	146

Theresa Gabriel
REGISTERED ELECTRICAL ENGINEER

July 19, 2013
PLANS APPROVAL DATE

REGISTERED PROFESSIONAL ENGINEER
Theresa Aziz Gabriel
No. E15129
Exp. 6-30-14
ELECTRICAL
STATE OF CALIFORNIA

THE STATE OF CALIFORNIA OR ITS OFFICERS OR AGENTS SHALL NOT BE RESPONSIBLE FOR THE ACCURACY OR COMPLETENESS OF SCANNED COPIES OF THIS PLAN SHEET.

TO ACCOMPANY PLANS DATED 6-23-14

CONDUIT

NEW	EXISTING	
		LIGHTING CONDUIT, UNLESS OTHERWISE INDICATED OR NOTED
		TRAFFIC SIGNAL CONDUIT
C	c	COMMUNICATION CONDUIT
T	t	TELEPHONE CONDUIT
F	f	FIRE ALARM CONDUIT
FO	fo	FIBER OPTIC CONDUIT
		CONDUIT TERMINATION
R	r	CONDUIT RISER ATTACHED TO THE STRUCTURE OR SERVICE POLE

SERVICE EQUIPMENT

NEW	EXISTING	
OH	oh	OVERHEAD LINES
U	U	WOOD POLE, "U" INDICATES UTILITY OWNED
		POLE GUY WITH ANCHOR
		UTILITY TRANSFORMER - GROUND MOUNTED
III	III	SERVICE EQUIPMENT ENCLOSURE TYPE. DOOR INDICATES FRONT OF ENCLOSURE
T	t	TELEPHONE DEMARCATION CABINET

POLE-MOUNTED SERVICE DESIGNATION

TYPE H SERVICE, 28'-10" — TYPE OF INSTALLATION AND POLE HEIGHT ABOVE GRADE

FLASHING BEACON

NEW	EXISTING	
R	R	FLASHING BEACON (ONE VEHICLE SIGNAL HEAD WITH BACKPLATE AND VISOR) "R" INDICATES RED INDICATION, "Y" INDICATES YELLOW INDICATION
Y Y	Y Y	FLASHING BEACON WITH TYPE 15-FBS STANDARD AND A SIGN.
R R	R R	FLASHING BEACON WITH TYPES 9, 9A OR 9B SIGN UNLESS OTHERWISE SPECIFIED OR INDICATED

SIGNAL EQUIPMENT

NEW	EXISTING	
C	C	PEDESTRIAN SIGNAL HEAD "C" INDICATES COUNTDOWN PEDESTRIAN HEAD
		PUSH BUTTON ASSEMBLY POST
		PEDESTRIAN BARRICADE
		VEHICLE SIGNAL HEAD (WITH BACKPLATE AND 3-SECTIONS: RED, YELLOW AND GREEN)
		VEHICLE SIGNAL HEAD WITH ANGLE VISOR
PV	PV	MODIFICATIONS OF BASIC SYMBOL: "L" INDICATES ALL NON-ARROW SECTIONS LOUVERED "LG" INDICATES LOUVERED GREEN SECTION ONLY "PV" INDICATES ALL 12" SECTIONS PROGRAMMED VISIBILITY "8" INDICATES ALL 8" SECTIONS (ONLY WHEN SPECIFIED)
		VEHICLE SIGNAL HEAD CONSISTING OF RED, YELLOW AND GREEN LEFT ARROW SECTIONS
		VEHICLE SIGNAL HEAD CONSISTING OF RED AND YELLOW SECTIONS WITH AN UP GREEN ARROW SECTION
		VEHICLE SIGNAL HEAD (5 SECTION) CONSISTING OF RED, YELLOW AND GREEN SECTIONS WITH YELLOW AND GREEN RIGHT ARROW SECTIONS
		TYPE 15TS STANDARD WITH VEHICLE SIGNAL HEAD AND LUMINAIRE
		TYPE 21TS STANDARD WITH VEHICLE SIGNAL HEAD AND LUMINAIRE
		STANDARD WITH LUMINAIRE AND SIGNAL MAST ARMS AND ATTACHED VEHICLE SIGNAL HEADS
		TYPE 1 STANDARD WITH ATTACHED VEHICLE SIGNAL HEADS
		STANDARD WITH A SIGNAL MAST ARM, ATTACHED VEHICLE SIGNAL HEADS AND INTERNALLY ILLUMINATED STREET NAME SIGN
		CONTROLLER ASSEMBLY. DOOR INDICATES FRONT OF CABINET

SIGNAL EQUIPMENT Cont

NEW	EXISTING	
		GUARD POST
		TYPE 1 STANDARD WITH RAMP METERING SIGN
		OPTICAL DETECTOR FOR THE EMERGENCY VEHICLE DETECTION SYSTEM

NOTES:

1. All signal sections shall be 12" unless shown otherwise.
2. Signal heads shall be provided with backplates unless shown otherwise.

ILLUMINATED OVERHEAD SIGN

NEW	EXISTING	
		SINGLE POST, SINGLE ILLUMINATED SIGN, BALANCED BUTTERFLY
		SINGLE POST, DOUBLE ILLUMINATED SIGN, BALANCED BUTTERFLY
		SINGLE POST, SINGLE ILLUMINATED SIGN, FULL CANTILEVER
		DOUBLE POST, SINGLE ILLUMINATED SIGN
		SINGLE ILLUMINATED SIGN MOUNTED ON STRUCTURE
		DOUBLE POST, SINGLE ILLUMINATED SIGN WITH ELECTROLIER

STATE OF CALIFORNIA
DEPARTMENT OF TRANSPORTATION

ELECTRICAL SYSTEMS (LEGEND AND ABBREVIATIONS)

NO SCALE

RSP ES-1B DATED JULY 19, 2013 SUPERSEDES STANDARD PLAN ES-1B DATED MAY 20, 2011 - PAGE 426 OF THE STANDARD PLANS BOOK DATED 2010.

REVISED STANDARD PLAN RSP ES-1B

2010 REVISED STANDARD PLAN RSP ES-1B

7-15-13

Dist	COUNTY	ROUTE	POST MILES TOTAL PROJECT	SHEET No.	TOTAL SHEETS
04	Nap	29	47.0/47.2	84	146

Theresa Gabriel
REGISTERED ELECTRICAL ENGINEER

July 19, 2013
PLANS APPROVAL DATE

REGISTERED PROFESSIONAL ENGINEER
Theresa Aziz Gabriel
No. E15129
Exp. 6-30-14
ELECTRICAL
STATE OF CALIFORNIA

THE STATE OF CALIFORNIA OR ITS OFFICERS OR AGENTS SHALL NOT BE RESPONSIBLE FOR THE ACCURACY OR COMPLETENESS OF SCANNED COPIES OF THIS PLAN SHEET.

TO ACCOMPANY PLANS DATED 6-23-14

EQUIPMENT IDENTIFICATION

ILLUMINATED SIGN IDENTIFICATION NUMBER:

SIGN No. 12345

10 ISL SCI 1.0

- SIGN NUMBER - PLACE ON POST OR STRUCTURE
- TRANSFORMER RATING (kVA)
- LIGHTING CONTROL TYPE
- NUMBER AND TYPE OF FIXTURES

} DO NOT PLACE ON STANDARD OR STRUCTURE

ELECTROLIER OR EQUIPMENT IDENTIFICATION NUMBER:

12345 - 15'-0"

- MAST ARM LENGTH, IF SHOWN. DO NOT PLACE ON STANDARD OR STRUCTURE
- EQUIPMENT NUMBER - PLACE ON STANDARD OR STRUCTURE. EXISTING EQUIPMENT NUMBERS ARE SHOWN IN PARENTHESIS

CONDUIT AND CONDUCTOR IDENTIFICATION:

1½"C, 2#10, 15#14, 2 DLC, 12P#18 (PAIR)

- NUMBER AND SIZE OF CONDUCTORS AND CABLES
- SIZE OF CONDUIT IN INCHES

ø1, ø2, ø2P, etc.	TRAFFIC PHASE IDENTIFICATION FOR SIGNAL FACES, DETECTORS AND PHASE DIAGRAMS
1 2 3	LEGEND NUMBERS
A B C	EQUIPMENT, SIGNAL POLES, INSTALLATION OR ITEMS
1 2 3	CONDUIT RUN NUMBERS

SIGNAL AND LIGHTING STANDARD (TYPICAL DESIGNATION):

19A - 3 - 100

- WIND VELOCITY = 100 mph
- CASE 3 ARM LOADING
- STANDARD TYPE
- STANDARD PLAN SHEET NUMBER
- DETAIL, NUMBER, SECTION, TYPE OR ELEVATION

MISCELLANEOUS EQUIPMENT

NEW	EXISTING	
CMS	cms	CHANGEABLE MESSAGE SIGN
		CLOSED CIRCUIT TELEVISION CAMERA
		HIGHWAY ADVISORY RADIO POLE AND ANTENNA
EMS	ems	EXTINGUISHABLE MESSAGE SIGN
M V	m v	DETECTION DEVICE M = MICROWAVE SENSOR V = VIDEO IMAGE SENSOR

WIRING DIAGRAM LEGEND

- EXTERNAL CONDUCTOR
- CONDUCTOR OR BUS
- TIE POINT
- CONTACTOR COIL
- CONTACTOR, NO CONTACT
- TERMINAL BLOCKS
- CONTACTOR, NC CONTACT
- ENCLOSURE BOND
- GROUNDING ELECTRODE
- CIRCUIT BREAKER
- RECEPTACLE

PULL BOXES

NEW	EXISTING	
		PULL BOX, No. 5 UNLESS OTHERWISE INDICATED OR NOTED
3	9A(21)	PULL BOX, ADDITIONAL DESIGNATIONS OR DESCRIPTIONS

3 No. 3½ PULL BOX
5 No. 5 PULL BOX
6 No. 6 PULL BOX
7 No. 7 (CEILING PULL BOX)
8 No. 8 (PENDANT SOFFIT PULL BOX)
9 No. 9 PULL BOX
9A No. 9A PULL BOX

(C) COMMUNICATIONS PULL BOX
(E) PULL BOX WITH EXTENSION
(S) SPRINKLER CONTROL PULL BOX
(21) ANCHOR BOLTS AND CONDUIT FOR FUTURE INSTALLATION OF TYPE 21 STANDARD
(T) TRAFFIC PULL BOX

VEHICLE DETECTORS

5 J 9 U

- VEHICLE DETECTOR DESIGNATION
- U = UPPER
  L = LOWER
- SLOT NUMBER IN INPUT FILE
- INPUT FILE (I OR J)
- PHASE

NEW	EXISTING	
		TYPE A DETECTOR LOOP. OUTLINE OF SAWCUT SHOWN
		TYPE B DETECTOR LOOP. OUTLINE OF SAWCUT SHOWN
		TYPE C DETECTOR LOOP. OUTLINE OF SAWCUT SHOWN
		TYPE D DETECTOR LOOP. OUTLINE OF SAWCUT SHOWN
		TYPE E DETECTOR LOOP. OUTLINE OF SAWCUT SHOWN
		TYPE Q DETECTOR LOOP. OUTLINE OF SAWCUT SHOWN
		MAGNETIC DETECTOR
DH	dh	DETECTOR HANDHOLE
		MICROWAVE OR VIDEO DETECTION ZONE

STATE OF CALIFORNIA
DEPARTMENT OF TRANSPORTATION

ELECTRICAL SYSTEMS (LEGEND AND ABBREVIATIONS)

NO SCALE

RSP ES-1C DATED JULY 19, 2013 SUPERSEDES STANDARD PLAN ES-1C DATED MAY 20, 2011 - PAGE 427 OF THE STANDARD PLANS BOOK DATED 2010.

REVISED STANDARD PLAN RSP ES-1C

2010 REVISED STANDARD PLAN RSP ES-1C

7-11-13

Dist	COUNTY	ROUTE	POST MILES TOTAL PROJECT	SHEET No.	TOTAL SHEETS
04	Nap	29	47.0/47.2	85	146

Theresa Gabriel
REGISTERED ELECTRICAL ENGINEER

July 19, 2013
PLANS APPROVAL DATE

REGISTERED PROFESSIONAL ENGINEER
Theresa Aziz Gabriel
No. E15129
Exp. 6-30-14
ELECTRICAL
STATE OF CALIFORNIA

THE STATE OF CALIFORNIA OR ITS OFFICERS OR AGENTS SHALL NOT BE RESPONSIBLE FOR THE ACCURACY OR COMPLETENESS OF SCANNED COPIES OF THIS PLAN SHEET.

TO ACCOMPANY PLANS DATED 6-23-14

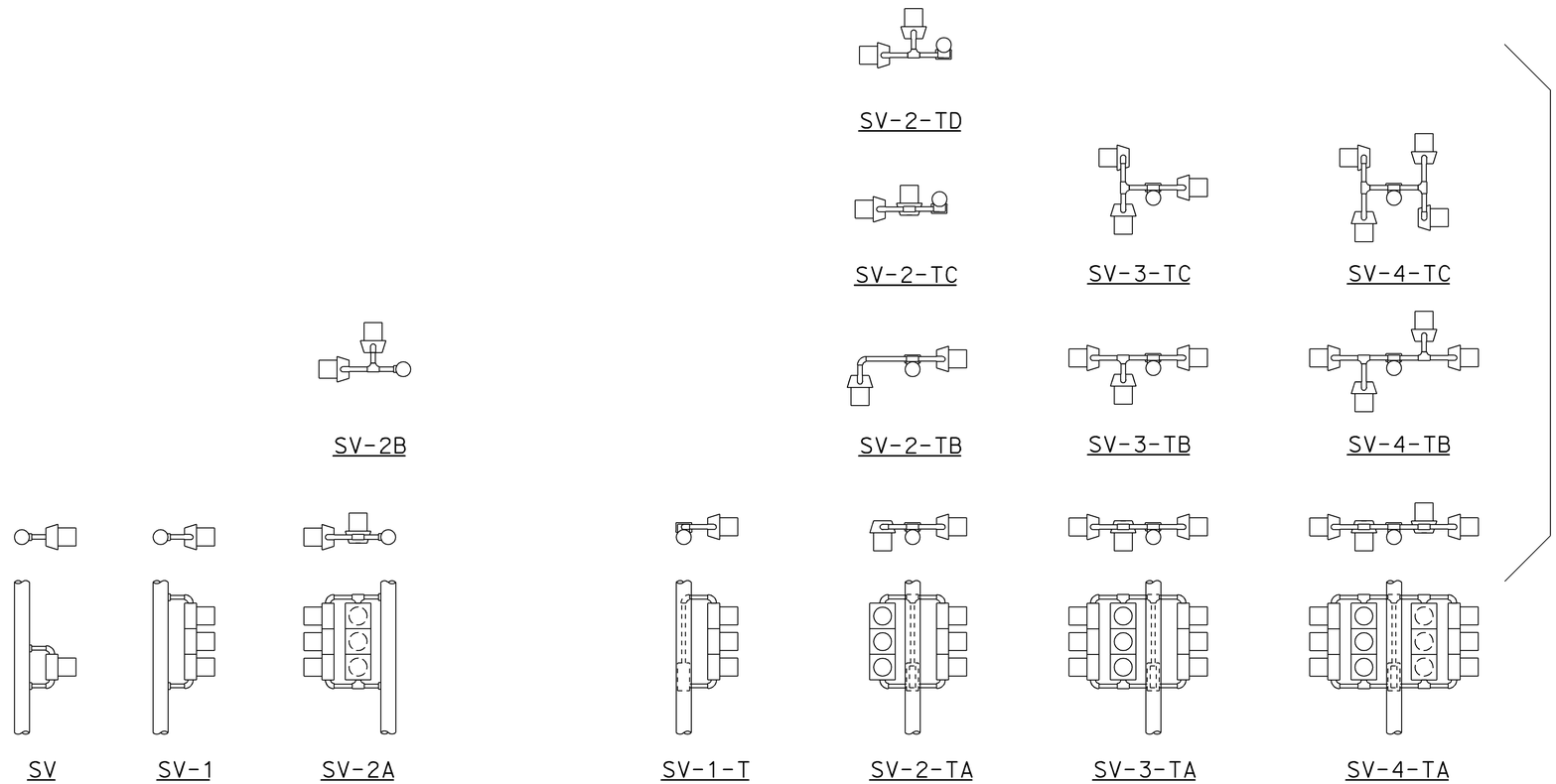

SIDE MOUNTINGS

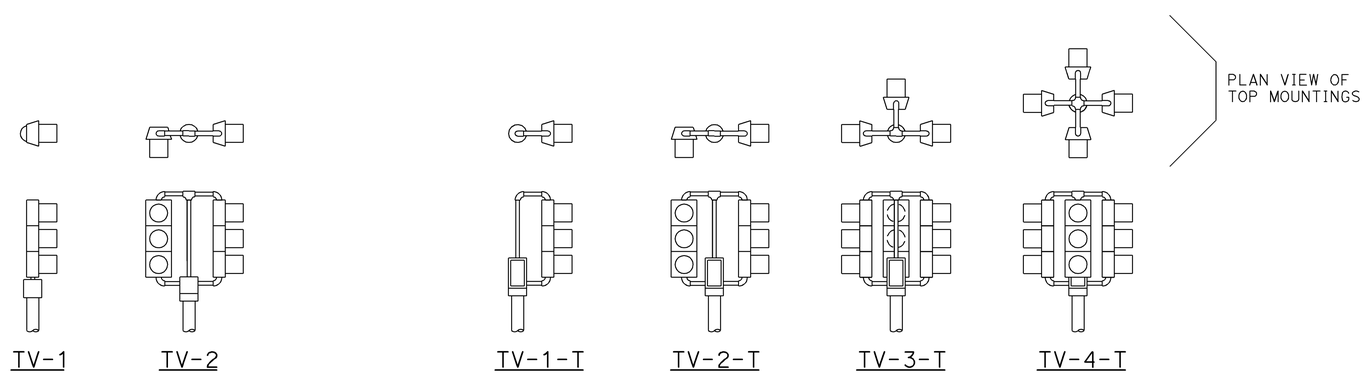

TOP MOUNTINGS

ABBREVIATIONS:

SV	SIDE MOUNTED VEHICLE SIGNALS
T	TERMINAL COMPARTMENT
TV	TOP MOUNTED VEHICLE SIGNALS
1, 2, 3, 4	NUMBER OF SIGNAL FACES (3 - SECTION, UNLESS OTHERWISE INDICATED)
A, B, C, D	CONFIGURATION OF SIGNALS

NOTES:

1. Mountings shall be oriented to provide maximum horizontal clearance to adjacent roadway.
2. Bracket arms shall be long enough to permit proper alignment of signals and backplate installation.
3. See Standard Plans ES-4D and ES-4E for attachment fitting details.

STATE OF CALIFORNIA
DEPARTMENT OF TRANSPORTATION

ELECTRICAL SYSTEMS (VEHICULAR SIGNAL HEADS AND MOUNTINGS)

NO SCALE

RSP ES-4A DATED JULY 19, 2013 SUPERSEDES STANDARD PLAN ES-4A DATED MAY 20, 2011 - PAGE 443 OF THE STANDARD PLANS BOOK DATED 2010.

REVISED STANDARD PLAN RSP ES-4A

2010 REVISED STANDARD PLAN RSP ES-4A

7-9-13

Dist	COUNTY	ROUTE	POST MILES TOTAL PROJECT	SHEET No.	TOTAL SHEETS
04	Nap	29	47.0/47.2	86	146

Theresa Gabriel
REGISTERED ELECTRICAL ENGINEER

July 19, 2013
PLANS APPROVAL DATE

REGISTERED PROFESSIONAL ENGINEER Theresa Aziz Gabriel No. E15129 Exp. 6-30-14 ELECTRICAL STATE OF CALIFORNIA

THE STATE OF CALIFORNIA OR ITS OFFICERS OR AGENTS SHALL NOT BE RESPONSIBLE FOR THE ACCURACY OR COMPLETENESS OF SCANNED COPIES OF THIS PLAN SHEET.

TO ACCOMPANY PLANS DATED 6-23-14

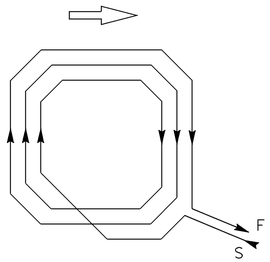

WINDING DETAIL

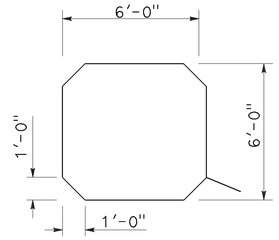

SAWCUT DETAIL

TYPE A LOOP DETECTOR CONFIGURATION

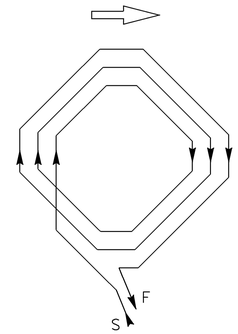

WINDING DETAIL

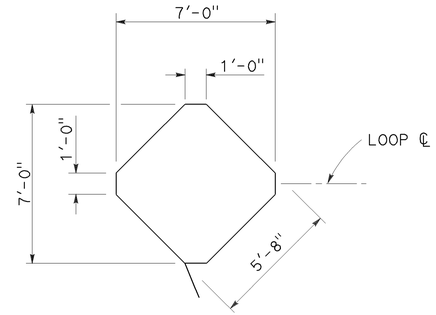

SAWCUT DETAIL

TYPE B LOOP DETECTOR CONFIGURATION

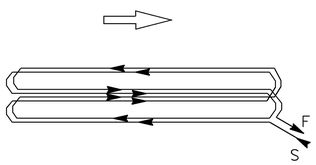

WINDING DETAIL

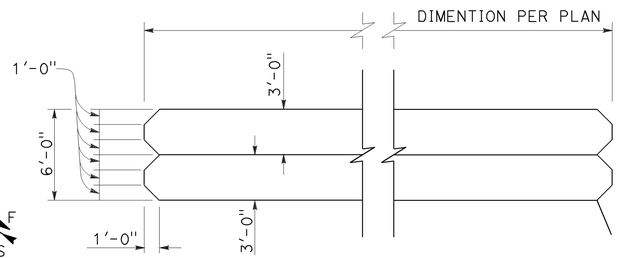

SAWCUT DETAIL

TYPE C LOOP DETECTOR CONFIGURATION

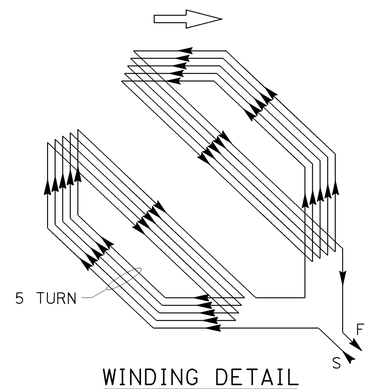

WINDING DETAIL

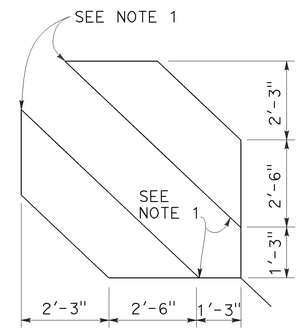

SAWCUT DETAIL

TYPE D LOOP DETECTOR CONFIGURATION

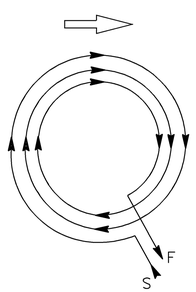

WINDING DETAIL

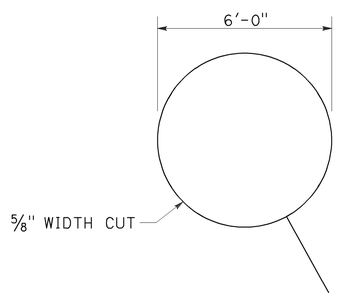

SAWCUT DETAIL

TYPE E LOOP DETECTOR CONFIGURATION

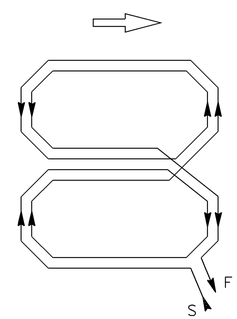

WINDING DETAIL

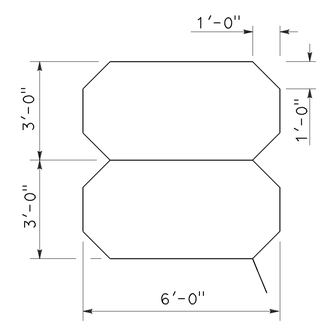

SAWCUT DETAIL

TYPE Q LOOP DETECTOR CONFIGURATION

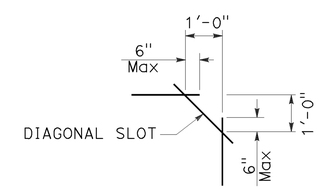

PLAN VIEW OF DIAGONAL SLOT AT CORNERS

NOTES:

1. Round corners of acute angle sawcuts to prevent damage to conductors.
2. Typical distance separating loops from edge to edge is 10' for Type A, B, D and E installation in single lane.

STATE OF CALIFORNIA
DEPARTMENT OF TRANSPORTATION

ELECTRICAL SYSTEMS (DETECTORS)

NO SCALE

RSP ES-5B DATED JULY 19, 2013 SUPERSEDES STANDARD PLAN ES-5B DATED MAY 20, 2011 - PAGE 449 OF THE STANDARD PLANS BOOK DATED 2010.

REVISED STANDARD PLAN RSP ES-5B

2010 REVISED STANDARD PLAN RSP ES-5B

7-9-13

Dist	COUNTY	ROUTE	POST MILES TOTAL PROJECT	SHEET No.	TOTAL SHEETS
04	Nap	29	47.0/47.2	87	146

Theresa Gabriel
REGISTERED ELECTRICAL ENGINEER

July 19, 2013
PLANS APPROVAL DATE

REGISTERED PROFESSIONAL ENGINEER
Theresa Aziz Gabriel
No. E15129
Exp. 6-30-14
ELECTRICAL
STATE OF CALIFORNIA

THE STATE OF CALIFORNIA OR ITS OFFICERS OR AGENTS SHALL NOT BE RESPONSIBLE FOR THE ACCURACY OR COMPLETENESS OF SCANNED COPIES OF THIS PLAN SHEET.

TO ACCOMPANY PLANS DATED 6-23-14

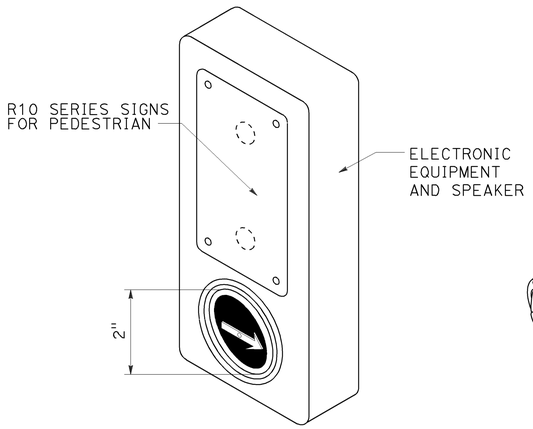

ACCESSIBLE PEDESTRIAN SIGNAL

DETAIL A
(See note 1 to 4)

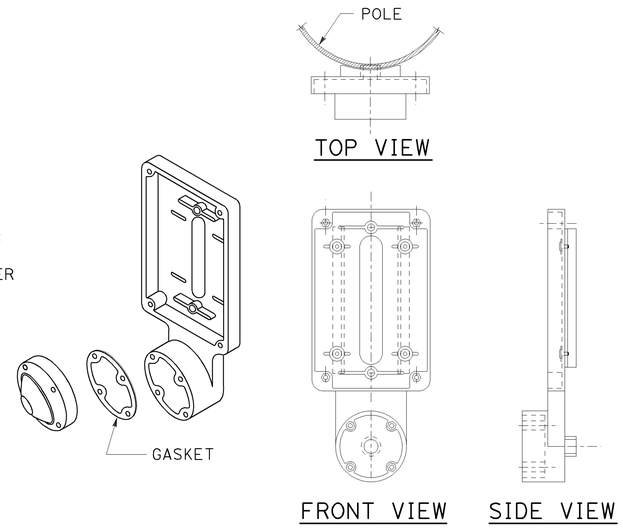

TYPE B PUSH BUTTON ASSEMBLY

DETAIL B
(See note 1 to 4)

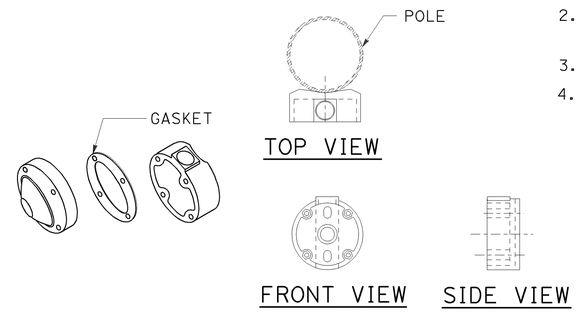

TYPE C PUSH BUTTON ASSEMBLY

DETAIL C
(See note 1 to 4)

NOTES:

1. Back casting shape to fit curvature of pole.
2. Provide cover fitting for top of post, when PBA is mounted on push button assembly post.
3. Install push button on crosswalk side of standard.
4. Use R10 series regulatory signs and plaques for pedestrian and bicycle facilities.

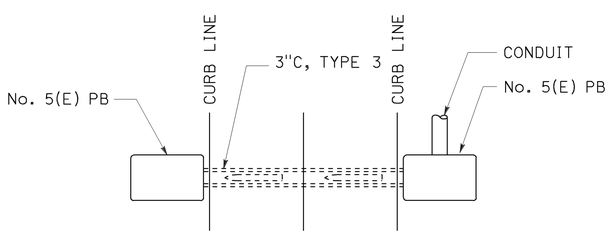

PLAN

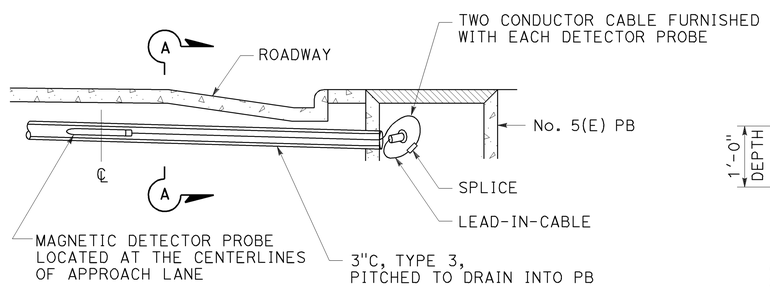

ELEVATION

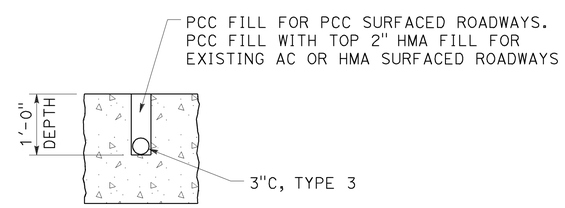

SECTION A-A

MAGNETIC VEHICLE DETECTOR

INSTALLATION DETAILS

DETAIL D

STATE OF CALIFORNIA
DEPARTMENT OF TRANSPORTATION

ELECTRICAL SYSTEMS (ACCESSIBLE PEDESTRIAN SIGNAL, PUSH BUTTON ASSEMBLIES AND MAGNETIC VEHICLE DETECTOR)

NO SCALE

RSP ES-5C DATED JULY 19, 2013 SUPERSEDES STANDARD PLAN ES-5C
DATED MAY 20, 2011 - PAGE 450 OF THE STANDARD PLANS BOOK DATED 2010.

REVISED STANDARD PLAN RSP ES-5C

2010 REVISED STANDARD PLAN RSP ES-5C

7-9-13

DIST	COUNTY	ROUTE	POST MILES TOTAL PROJECT	SHEET NO.	TOTAL SHEETS
04	Nap	29	47.0/47.2	88	146

Theresa Gabriel
REGISTERED ELECTRICAL ENGINEER

July 19, 2013
PLANS APPROVAL DATE

REGISTERED PROFESSIONAL ENGINEER Theresa Aziz Gabriel No. E15129 Exp. 6-30-14 ELECTRICAL STATE OF CALIFORNIA

THE STATE OF CALIFORNIA OR ITS OFFICERS OR AGENTS SHALL NOT BE RESPONSIBLE FOR THE ACCURACY OR COMPLETENESS OF SCANNED COPIES OF THIS PLAN SHEET.

TO ACCOMPANY PLANS DATED 6-23-14

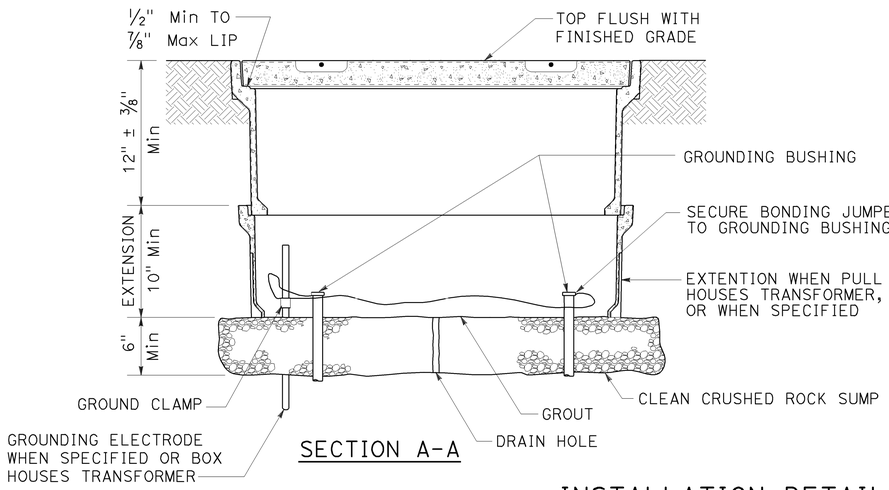

SECTION A-A

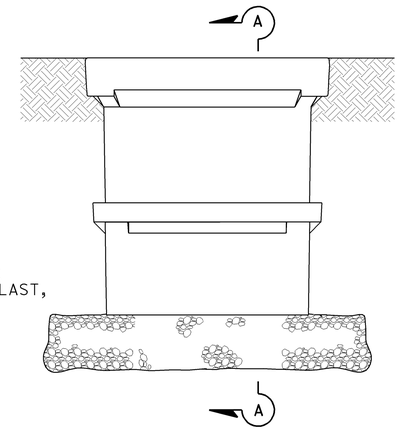

SIDE VIEW

INSTALLATION DETAILS

DETAIL A

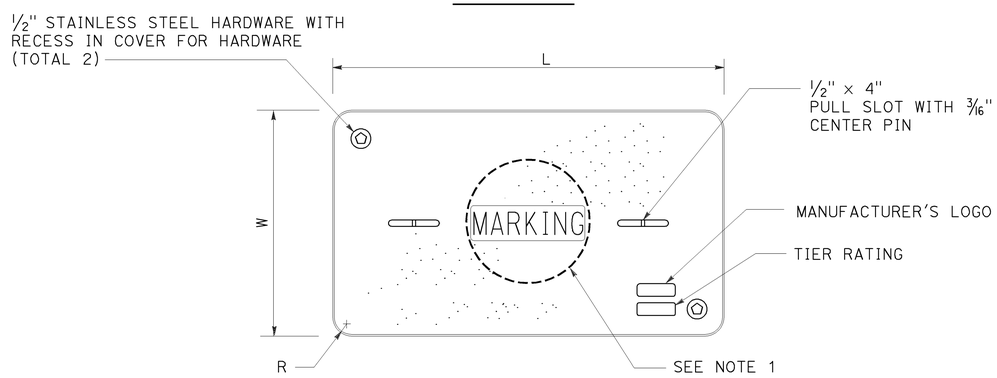

COVER TOP VIEW

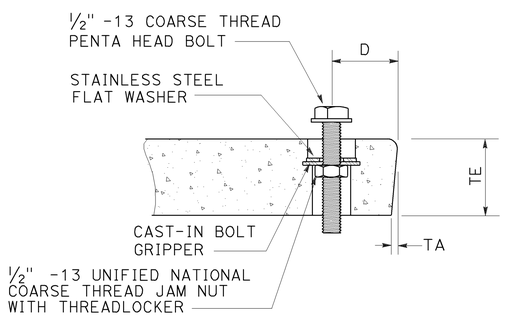

TYPICAL COVER CAPTIVE BOLT

OR SIMILAR

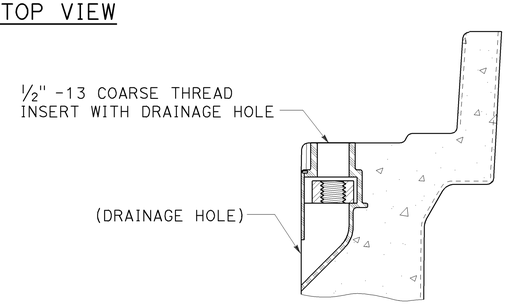

TYPICAL THREADED INSERT

OR SIMILAR

DIMENSION TABLE										
PULL BOX	PULL BOX			COVER						
	MINIMUM DEPTH BOX	MINIMUM DEPTH EXTENSION	MAXIMUM WEIGHT	L	W	R	TE	TA	D	MAXIMUM WEIGHT
No. 3½	12"	N/A	40 lb	1′ - 3⅜"	10⅛"	1⅜"	2"	⅛"	1¾"	30 lb
No. 5	12"	10"	55 lb	1′ - 11¼"	1′ - 1¾"	1⅜"	2"	⅛"	1¾"	60 lb
No. 6	12"	10"	70 lb	2′ - 6½"	1′ - 5½"	1⅜"	2"	⅛"	2"	85 lb

NOTES:

1. Pull box covers shall be marked as follows: "SERVICE" Service circuits between service point and service disconnect; "SPRINKLER-CONTROL" sprinkler control circuits, 50 V or less; "CALTRANS" on all pull boxes, except pull boxes marked "SPRINKLER-CONTROL"; and "TELEPHONE" Telephone service;
   - A) No. 3½ pull box.
     - 1) "SIGNAL" - Traffic signal circuits with or without lighting or sign lighting circuits.
     - 2) "LIGHTING" - Lighting or sign lighting circuits where voltage is under 600 V.
   - B) No. 5, 6, 9 or 9A pull box.
     - 1) "TRAFFIC SIGNAL" - Traffic signal circuits with or without lighting or sign lighting circuits.
     - 2) "LIGHTING" - Lighting or sign lighting circuits where voltage is under 600 V.
     - 3) "LIGHTING-HIGH VOLTAGE" - Lighting or sign lighting circuits where voltage is above 600 V.
     - 4) "IRRIGATION" - Circuits to irrigation controller 120 V or more.
     - 5) "RAMP METER" - Ramp meter circuits.
     - 6) "COUNT STATION" - Count or speed monitor circuits.
     - 7) "COMMUNICATIONS" - Communication circuits.
     - 8) "TOS COMMUNICATIONS" - TOS communication line.
     - 9) "TOS POWER" - TOS power.
     - 10) "TDC POWER" - Telephone demarcation cabinet power.
     - 11) "CCTV" - Closed circuit television circuits.
     - 12) "TMS" - Traffic monitoring station circuits.
     - 13) "CMS" - Changeable message sign circuits.
     - 14) "HAR" - Highway advisory radio circuits.
     - 15) "BOOSTER PUMP" - Booster pump circuit.
2. The nominal dimensions of the opening in which the cover sets shall be the same as the cover dimensions except the length and width dimensions shall be ⅛" greater.
3. Covers and boxes shall be interchangeable with California standard male and female gages. When interchanged with a standard male or female gage, the top surfaces shall be flush within ⅛". Top outside radius of covers and pull boxes shall have a ⅛" radius.
4. Pull box extension may be another pull box as long as the bottom edge of the pull box can fit into the cover opening.
5. All dimensions for the cover for non-traffic pull box are nominal values.

STATE OF CALIFORNIA
DEPARTMENT OF TRANSPORTATION

ELECTRICAL SYSTEMS (NON-TRAFFIC PULL BOX)

NO SCALE

RSP ES-8A DATED JULY 19, 2013 SUPERSEDES RSP ES-8A DATED JANUARY 20, 2012 THAT SUPPLEMENTS THE STANDARD PLANS BOOK DATED 2010.

REVISED STANDARD PLAN RSP ES-8A

2010 REVISED STANDARD PLAN RSP ES-8A

7-15-13

Dist	COUNTY	ROUTE	POST MILES TOTAL PROJECT	SHEET No.	TOTAL SHEETS
04	Nap	29	47.0/47.2	89	146

LICENSED LANDSCAPE ARCHITECT

July 19, 2013
PLANS APPROVAL DATE

THE STATE OF CALIFORNIA OR ITS OFFICERS OR AGENTS SHALL NOT BE RESPONSIBLE FOR THE ACCURACY OR COMPLETENESS OF SCANNED COPIES OF THIS PLAN SHEET.

LICENSED LANDSCAPE ARCHITECT — Gregory A. Balzer — 2576 — 02-28-15 Renewal Date — 7-19-13 Date — STATE OF CALIFORNIA

TO ACCOMPANY PLANS DATED 6-23-14

2010 REVISED STANDARD PLAN RSP H1

A

AB	AGGREGATE BASE
ABS	ACRYLONITRILE-BUTADIENE-STYRENE
AC	ASPHALT CONCRETE
ACC	ARMOR-CLAD CONDUCTORS
Adj	ADJACENT/ADJUSTABLE
AIC	AUXILIARY IRRIGATION CONTROLLER
Alt	ALTERNATIVE
AMEND	AMENDMENT
ARV	AIR RELEASE VALVE
AUTO	AUTOMATIC
AUX	AUXILIARY
AVB	ATMOSPHERIC VACUUM BREAKER

B

B&B	BALLED AND BURLAPPED
B/B	BRASS/BRONZE
B/B/PL	BRASS/BRONZE/PLASTIC
B/PL	BRASS/PLASTIC
BFM	BONDED FIBER MATRIX
Bit Ctd	BITUMINOUS COATED
BP	BOOSTER PUMP
BPA	BACKFLOW PREVENTER ASSEMBLY
BPE	BACKFLOW PREVENTER ENCLOSURE
BV	BALL VALVE

C

C	CONDUIT
CAP	CORRUGATED ALUMINUM PIPE
CARV	COMBINATION AIR RELEASE VALVE
CB	COUPLING BAND
CCA	CAM COUPLER ASSEMBLY
CEC	CONTROLLER ENCLOSURE CABINET
CHDPE	CORRUGATED HIGH DENSITY POLYETHYLENE
CL	CHAIN LINK
CNC	CONTROL AND NEUTRAL CONDUCTORS
Conc	CONCRETE
CP	COPPER PIPE
CS	COMPOST SOCK
CSP	CORRUGATED STEEL PIPE
CST	CENTER STRIP
CV	CHECK VALVE

D

Dia	DIAMETER
DIP	DUCTILE IRON PIPE
DIT	DRIP IRRIGATION TUBING
DG	DECOMPOSED GRANITE
DN	DIAMETER NOMINAL
DVA	DRIP VALVE ASSEMBLY

E

EC	EROSION CONTROL
ECTC	EROSION CONTROL TECHNOLOGY COUNCIL
Elect	ELECTRIC/ELECTRICAL
Elev	ELEVATION
ELL	ELBOW
ENCL	ENCLOSURE
EP	EDGE OF PAVEMENT
ES	EDGE OF SHOULDER
EST	END STRIP
ESTB	ESTABLISHMENT
ETW	EDGE OF TRAVELED WAY

F

F	FULL CIRCLE
F/P	FULL/PART CIRCLE
FCV	FLOW CONTROL VALVE
FERT	FERTILIZER
FG	FINISHED GRADE
FH	FLEXIBLE HOSE
FIPT	FEMALE IRON PIPE THREAD
FIS	FERTILIZER INJECTOR SYSTEM
FL	FLOW LINE
FR	FIBER ROLL
FS	FLOW SENSOR
FSC	FLOW SENSOR CABLE
FV	FLUSH VALVE

G

Galv	GALVANIZED
GARV	GARDEN VALVE
GARVA	GARDEN VALVE ASSEMBLY
GM	GRAVEL MULCH
GPH	GALLONS PER HOUR
GPM	GALLONS PER MINUTE
GSP	GALVANIZED STEEL PIPE
GV	GATE VALVE

H

H	HALF CIRCLE
HDPE	HIGH DENSITY POLYETHYLENE
HP	HORSEPOWER/HINGE POINT
HPL	HIGH PRESSURE LINE
Hwy	HIGHWAY

I

IC	IRRIGATION CONTROLLER
ICC	IRRIGATION CONTROLLER(S) IN CONTROLLER ENCLOSURE CABINET
ID	INSIDE DIAMETER
IFS	IRRIGATION FILTRATION SYSTEM
IPS	IRON PIPE SIZE
IPT	IRON PIPE THREAD
Irr	IRRIGATION

L

L	LENGTH

M

Max	MAXIMUM
MBGR	METAL BEAM GUARD RAILING
MCV	MANUAL CONTROL VALVE
MIC	MASTER IRRIGATION CONTROLLER
Min	MINIMUM
MIPT	MALE IRON PIPE THREAD
Misc	MISCELLANEOUS
Mtl	MATERIAL
MVP	MAINTENANCE VEHICLE PULLOUT

N

NCN	NO COMMON NAME
NL	NOZZLE LINE
No.	NUMBER
NPT	NATIONAL PIPE THREAD

O

O/C	ON CENTER
OD	OUTSIDE DIAMETER
OL	OVERLAP

P

P	PART CIRCLE
PB	PULL BOX
PCC	PORTLAND CEMENT CONCRETE
PE	POLYETHYLENE
Pkt	PACKET
PL	PLASTIC
PLS	PURE LIVE SEED
PLT	PLANT/PLANTING
PLT ESTB	PLANT ESTABLISHMENT
PM	POST MILE
PR	PRESSURE RATED
PRLV	PRESSURE RELIEF VALVE
PRV	PRESSURE REGULATING VALVE
PVC	POLYVINYL CHLORIDE
Pvmt	PAVEMENT

Q

Q	QUARTER CIRCLE
QCV	QUICK COUPLING VALVE

R

R	RADIUS
RCP	REINFORCED CONCRETE PIPE
RCV	REMOTE CONTROL VALVE
RCVM	REMOTE CONTROL VALVE (MASTER)
RCVMF	REMOTE CONTROL VALVE (MASTER) W/FLOW SENSOR
RCVP	REMOTE CONTROL VALVE W/PRESSURE REGULATOR
RCW	RECYCLED WATER
RECP	ROLLED EROSION CONTROL PRODUCT
REQ	REQUIRED
RICS	REMOTE IRRIGATION CONTROL SYSTEM
R/W	RIGHT OF WAY

S

S	SLIP
SCH	SCHEDULE
SF	STATE-FURNISHED
Shld	SHOULDER
Sq	SQUARE
SST	SIDE STRIP
Sta	STATION
Std	STANDARD
SW	SIDEWALK/SOUND WALL

T

T	THIRD CIRCLE/THREAD
TLS	TRUCK LOADING STANDPIPE
TQ	THREE QUARTER CIRCLE
TRM	TURF REINFORCEMENT MAT
TT	TWO-THIRDS CIRCLE
TWSA	TREE WELL SPRINKLER ASSEMBLY
Typ	TYPICAL

U

UG	UNDERGROUND

W

W	WIDTH
W/	WITH
WM	WATER METER
WS	WYE STRAINER
WSA	WYE STRAINER ASSEMBLY
WSP	WELDED STEEL PIPE
WWM	WELDED WIRE MESH

NOTE:

For additional abbreviations, see Standard Plans A10A and A10B.

STATE OF CALIFORNIA
DEPARTMENT OF TRANSPORTATION

LANDSCAPE AND EROSION CONTROL ABBREVIATIONS

NO SCALE

RSP H1 DATED JULY 19, 2013 SUPERSEDES STANDARD PLAN H1 DATED MAY 20, 2011 - PAGE 218 OF THE STANDARD PLANS BOOK DATED 2010.

REVISED STANDARD PLAN RSP H1

Dist	COUNTY	ROUTE	POST MILES TOTAL PROJECT	SHEET No.	TOTAL SHEETS
04	Nap	29	47.0/47.2	90	146

LICENSED LANDSCAPE ARCHITECT

November 15, 2013
PLANS APPROVAL DATE

LICENSED LANDSCAPE ARCHITECT
Gregory A. Balzer 2576
2-28-15
Renewal Date
11-15-13
Date
STATE OF CALIFORNIA

THE STATE OF CALIFORNIA OR ITS OFFICERS OR AGENTS SHALL NOT BE RESPONSIBLE FOR THE ACCURACY OR COMPLETENESS OF SCANNED COPIES OF THIS PLAN SHEET.

TO ACCOMPANY PLANS DATED 6-23-14

EXISTING	NEW	ITEM DESCRIPTION
		WATER METER (WM)
		BACKFLOW PREVENTER ASSEMBLY (BPA)
		BACKFLOW PREVENTER ENCLOSURE (BPE)
		BOOSTER PUMP (BP)
		TRUCK LOADING STANDPIPE (TLS)
	FS	FLOW SENSOR (FS)
		MASTER IRRIGATION CONTROLLER (MIC)
		AUXILIARY IRRIGATION CONTROLLER (AIC)
		IRRIGATION CONTROLLER (IC) IRRIGATION CONTROLLER (IC) (BATTERY) IRRIGATION CONTROLLER (IC) (SOLAR) IRRIGATION CONTROLLER (IC) (TWO WIRE) IRRIGATION CONTROLLER(S) IN CONTROLLER ENCLOSURE CABINET (ICC)
acc	ACC	ARMOR-CLAD CONDUCTORS (ACC)
cnc	CNC	CONTROL AND NEUTRAL CONDUCTORS (CNC)
		IRRIGATION CONDUIT
		EXTEND IRRIGATION CONDUIT
dip	DIP	DUCTILE IRON PIPE (SUPPLY LINE) (MAIN) (DIP)
		GALVANIZED STEEL PIPE (SUPPLY LINE) (MAIN) (GSP)
		GALVANIZED STEEL PIPE (SUPPLY LINE) (LATERAL) (GSP)
		PLASTIC PIPE (SUPPLY LINE) (MAIN)
		PLASTIC PIPE (SUPPLY LINE) (LATERAL)
cp	CP	COPPER PIPE (SUPPLY LINE)
dit	DIT	DRIP IRRIGATION TUBING
		REMOTE CONTROL VALVE (RCV) REMOTE CONTROL VALVE (MASTER) (RCVM) REMOTE CONTROL VALVE (MASTER) W/FLOW METER (RCVMF)
P	P	REMOTE CONTROL VALVE W/PRESSURE REGULATOR (RCVP)
		EXISTING MANUAL CONTROL VALVE (MCV)
	V	DRIP VALVE ASSEMBLY (DVA)
	Y	WYE STRAINER ASSEMBLY (WSA)

EXISTING	NEW	ITEM DESCRIPTION
		GATE VALVE (GV)
		BALL VALVE (BV)
		QUICK COUPLING VALVE (QCV)
		CAM COUPLER ASSEMBLY (CCA)
		GARDEN VALVE ASSEMBLY (GARVA)
		PRESSURE REGULATING VALVE (PRV)
		PRESSURE RELIEF VALVE (PRLV)
		FLOW CONTROL VALVE (FCV)
		COMBINATION AIR RELEASE VALVE (CARV)
		CHECK VALVE (CV)
		FLUSH VALVE (FV)
		EXISTING NOZZLE LINE W/TURNING UNION
		EXISTING IRRIGATION SYSTEM
		EXISTING IRRIGATION SYSTEM TO BE REMOVED
		CHAIN LINK GATE
		QUICK COUPLING VALVE W/SPRINKLER PROTECTOR
3	3	SPRINKLER W/SPRINKLER PROTECTOR
	C	CONNECT TO EXISTING SYSTEM
		CAP
		CAP EXISTING
	\\\FR\\\	FIBER ROLL
	\\\CS\\\	COMPOST SOCK

RCV SIZE
IRRIGATION CONTROLLER
CONTROLLER STATION
VALVE IN PARALLEL (IF APPLICABLE)
GPM
QUANTITY OF SPRINKLERS (WHEN SHOWN)

* 2½"-A-2b-40-60

VALVE CODE

* VALVE CODES FOR EXISTING VALVES ARE SHOWN IN A DASHED ENCLOSURE.

STATE OF CALIFORNIA
DEPARTMENT OF TRANSPORTATION

LANDSCAPE AND EROSION CONTROL SYMBOLS

NO SCALE

RSP H2 DATED NOVEMBER 15, 2013 SUPERSEDES RSP H2 DATED JULY 19, 2013 AND STANDARD PLAN H2 DATED MAY 20, 2011 - PAGE 219 OF THE STANDARD PLANS BOOK DATED 2010.

REVISED STANDARD PLAN RSP H2

2010 REVISED STANDARD PLAN RSP H2

10-9-13

Dist	COUNTY	ROUTE	POST MILES TOTAL PROJECT	SHEET No.	TOTAL SHEETS
04	Nap	29	47.0/47.2	91	146

LICENSED LANDSCAPE ARCHITECT

July 19, 2013
PLANS APPROVAL DATE

THE STATE OF CALIFORNIA OR ITS OFFICERS OR AGENTS SHALL NOT BE RESPONSIBLE FOR THE ACCURACY OR COMPLETENESS OF SCANNED COPIES OF THIS PLAN SHEET.

LICENSED LANDSCAPE ARCHITECT
Gregory A. Balzer 2576
Renewal Date 2-28-15
Renewal Date 7-19-13
Date
STATE OF CALIFORNIA

TO ACCOMPANY PLANS DATED 6-23-14

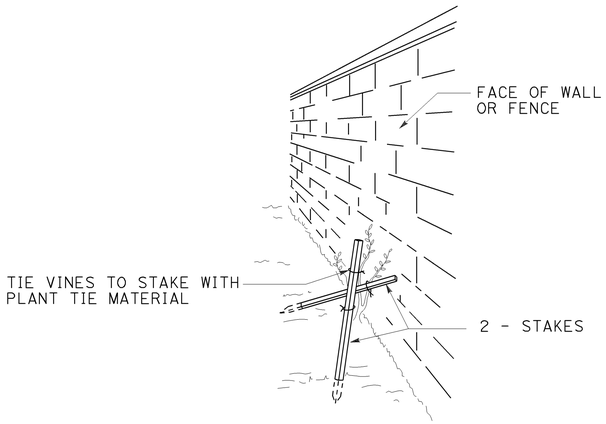

PERSPECTIVE
VINE STAKING

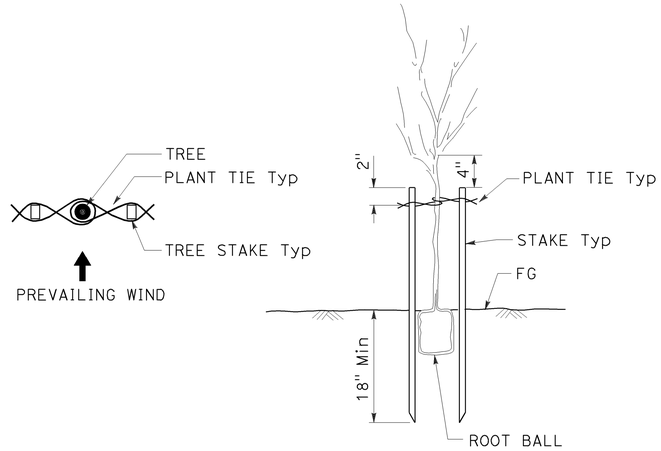

TREE STAKING

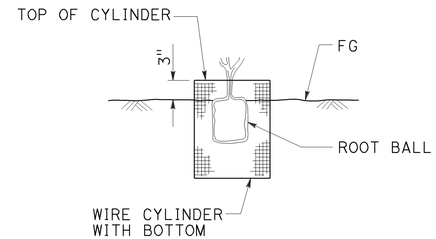

SECTION
ROOT PROTECTOR

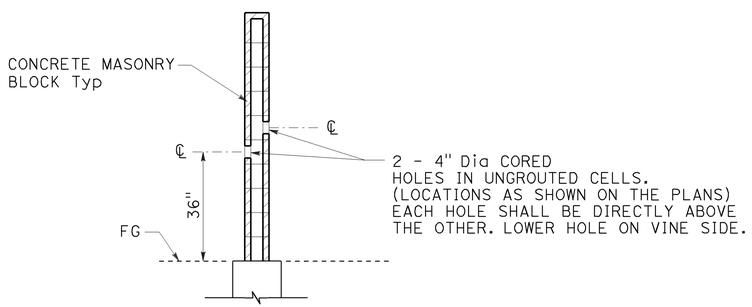

SECTION
CORE HOLE (VINE)

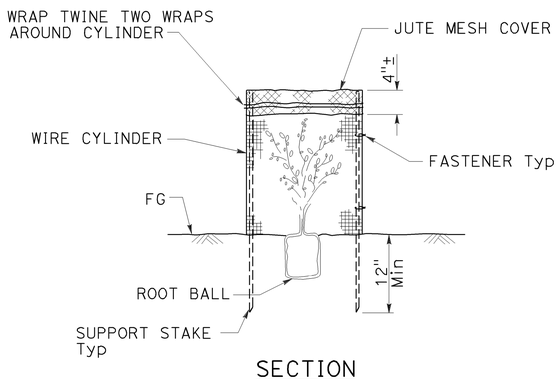

SECTION
FOLIAGE PROTECTOR

STATE OF CALIFORNIA
DEPARTMENT OF TRANSPORTATION

LANDSCAPE DETAILS

NO SCALE

RSP H4 DATED JULY 19, 2013 SUPERSEDES STANDARD PLAN H4
DATED MAY 20, 2011 - PAGE 221 OF THE STANDARD PLANS BOOK DATED 2010.

REVISED STANDARD PLAN RSP H4

2010 REVISED STANDARD PLAN RSP H4

6-28-13

Dist	COUNTY	ROUTE	POST MILES TOTAL PROJECT	SHEET No.	TOTAL SHEETS
04	Nap	29	47.0/47.2	92	146

LICENSED LANDSCAPE ARCHITECT

July 19, 2013
PLANS APPROVAL DATE

LICENSED LANDSCAPE ARCHITECT Gregory A. Balzer 2576 STATE OF CALIFORNIA 2-28-15 Renewal Date 7-19-13 Date

THE STATE OF CALIFORNIA OR ITS OFFICERS OR AGENTS SHALL NOT BE RESPONSIBLE FOR THE ACCURACY OR COMPLETENESS OF SCANNED COPIES OF THIS PLAN SHEET.

TO ACCOMPANY PLANS DATED 6-23-14

2010 REVISED STANDARD PLAN RSP H5

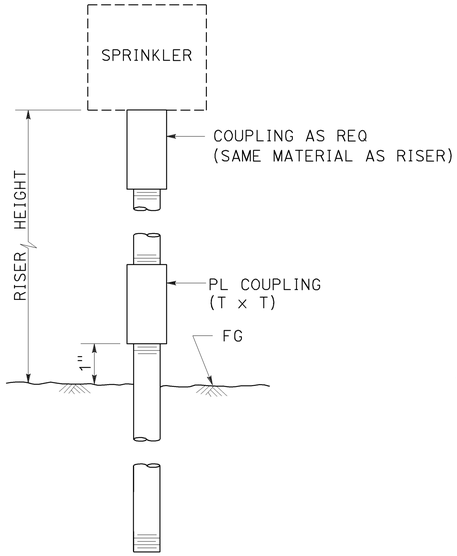

ELEVATION

RISER SPRINKLER ASSEMBLY TYPE I

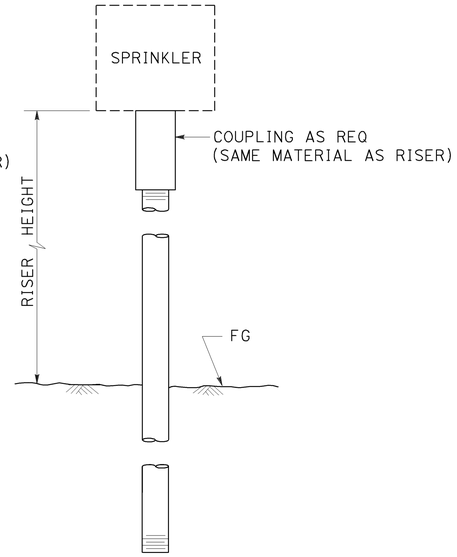

ELEVATION

RISER SPRINKLER ASSEMBLY TYPE II

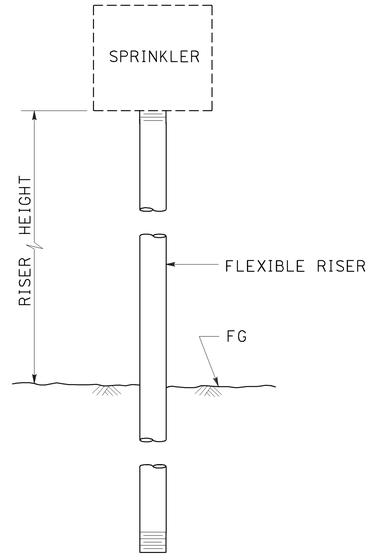

ELEVATION

RISER SPRINKLER ASSEMBLY TYPE III

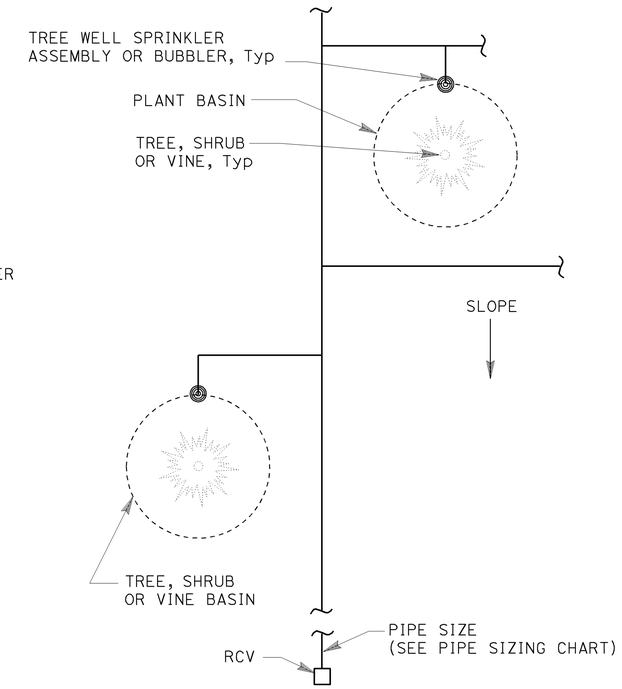

PLAN

NOTES:

1. Install tree well sprinkler assembly on up-hill side of plant when on slope.
2. Install bubbler within basin.

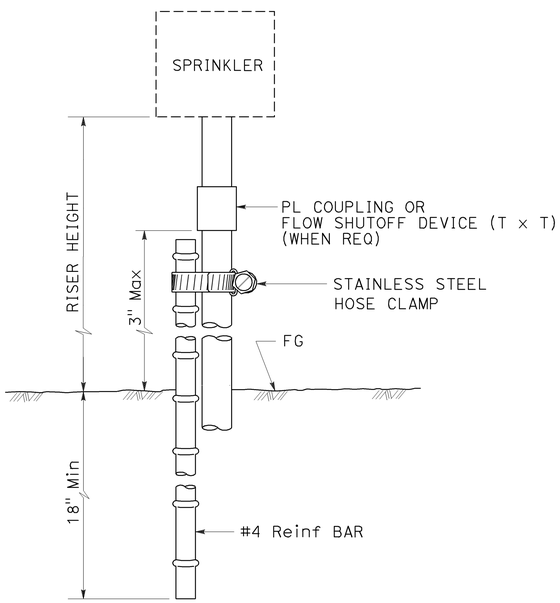

ELEVATION

RISER SPRINKLER ASSEMBLY TYPE IV

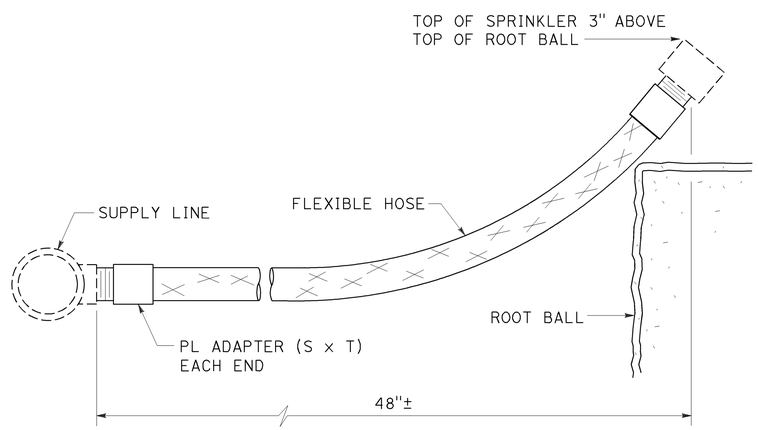

ELEVATION

RISER SPRINKLER ASSEMBLY TYPE V

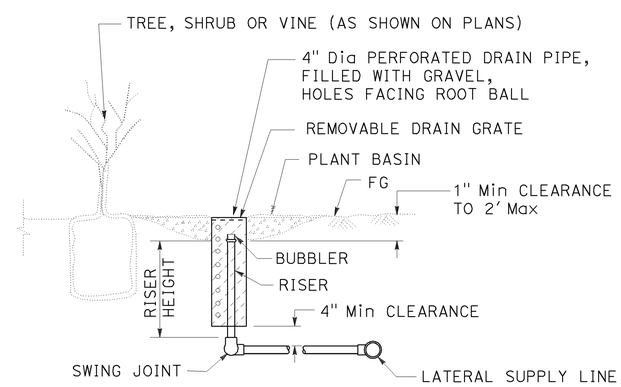

SECTION

TREE WELL SPRINKLER ASSEMBLY

STATE OF CALIFORNIA
DEPARTMENT OF TRANSPORTATION

LANDSCAPE DETAILS

NO SCALE

RSP H5 DATED JULY 19, 2013 SUPERSEDES STANDARD PLAN H5
DATED MAY 20, 2011 - PAGE 222 OF THE STANDARD PLANS BOOK DATED 2010.

REVISED STANDARD PLAN RSP H5

6-28-13

Dist	COUNTY	ROUTE	POST MILES TOTAL PROJECT	SHEET No.	TOTAL SHEETS
04	Nap	29	47.0/47.2	93	146

Gregory A. Balzer
LICENSED LANDSCAPE ARCHITECT

July 19, 2013
PLANS APPROVAL DATE

THE STATE OF CALIFORNIA OR ITS OFFICERS OR AGENTS SHALL NOT BE RESPONSIBLE FOR THE ACCURACY OR COMPLETENESS OF SCANNED COPIES OF THIS PLAN SHEET.

LICENSED LANDSCAPE ARCHITECT — Gregory A. Balzer — 2516 — Expiration Date 2-28-15 — Renewal Date 7-19-13 — Date — STATE OF CALIFORNIA

TO ACCOMPANY PLANS DATED 6-23-14

2010 REVISED STANDARD PLAN RSP H7

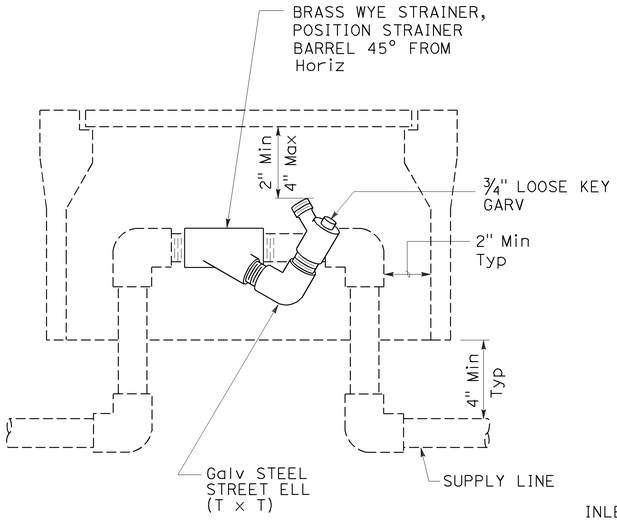

ELEVATION
WYE STRAINER ASSEMBLY

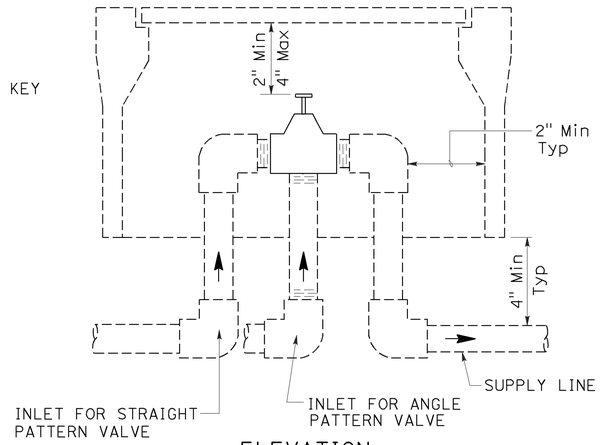

ELEVATION
VALVE

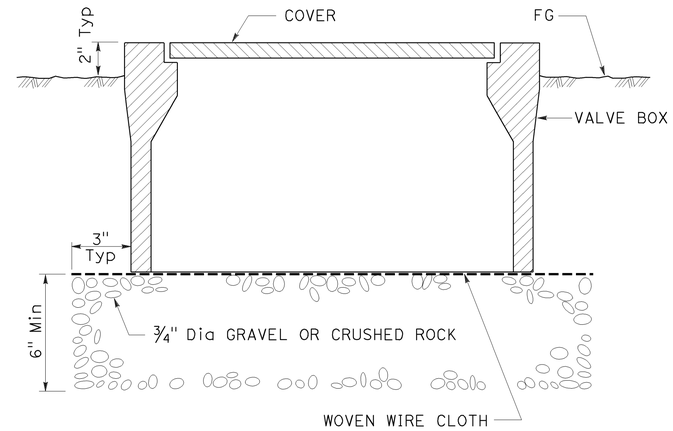

SECTION
VALVE BOX

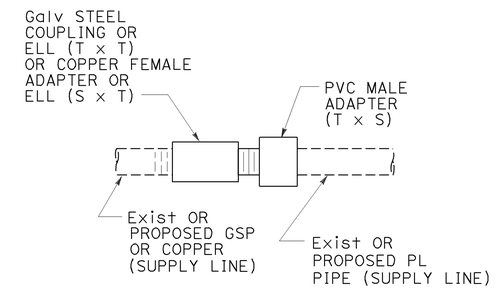

GALVANIZED OR COPPER PIPE CONNECTION TO PLASTIC PIPE

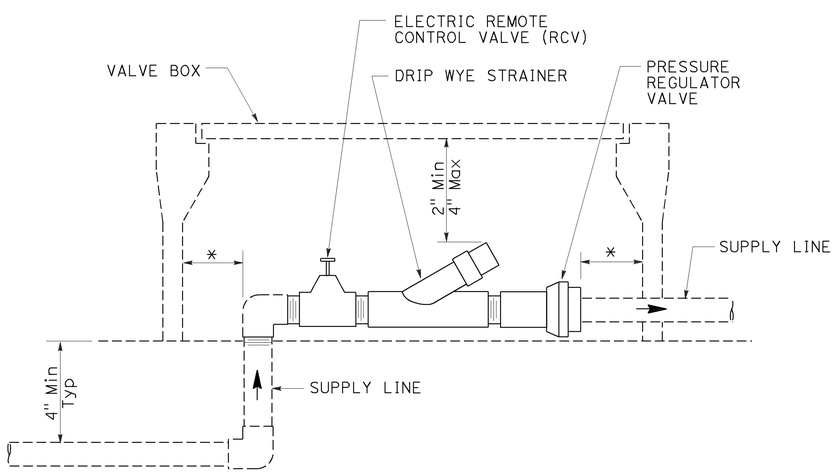

ELEVATION
DRIP VALVE ASSEMBLY

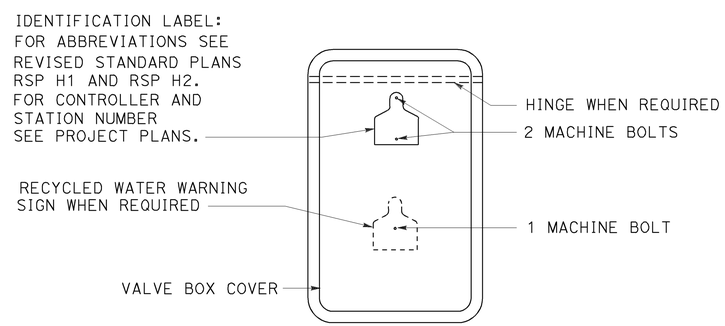

PLAN

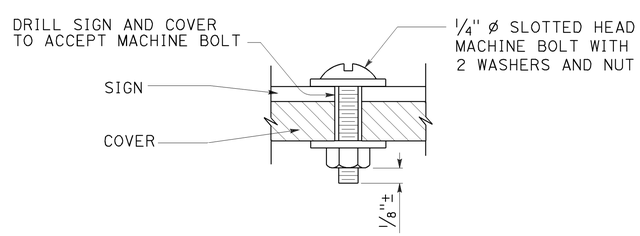

SECTION
VALVE BOX IDENTIFICATION

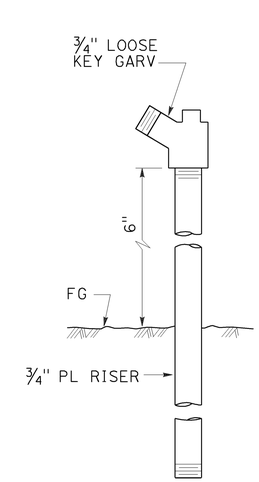

ELEVATION
GARDEN VALVE ASSEMBLY

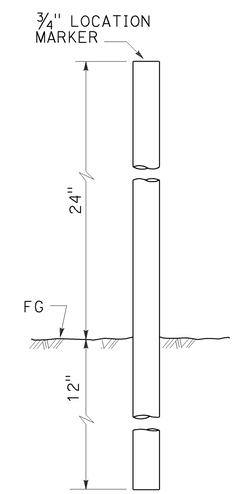

ELEVATION
LOCATION MARKER

GARDEN VALVE ASSEMBLY

STATE OF CALIFORNIA
DEPARTMENT OF TRANSPORTATION

LANDSCAPE DETAILS

NO SCALE

RSP H7 DATED JULY 19, 2013 SUPERSEDES STANDARD PLAN H7
DATED MAY 20, 2011 - PAGE 224 OF THE STANDARD PLANS BOOK DATED 2010.

REVISED STANDARD PLAN RSP H7

6-20-13

Dist	COUNTY	ROUTE	POST MILES TOTAL PROJECT	SHEET No.	TOTAL SHEETS
04	Nap	29	47.0/47.2	94	146

Gregory A. Balzer
LICENSED LANDSCAPE ARCHITECT

July 19, 2013
PLANS APPROVAL DATE

LICENSED LANDSCAPE ARCHITECT
Gregory A. Balzer 2576
Renewal Date 2-28-15
7-19-13
Date
STATE OF CALIFORNIA

THE STATE OF CALIFORNIA OR ITS OFFICERS OR AGENTS SHALL NOT BE RESPONSIBLE FOR THE ACCURACY OR COMPLETENESS OF SCANNED COPIES OF THIS PLAN SHEET.

TO ACCOMPANY PLANS DATED 6-23-14

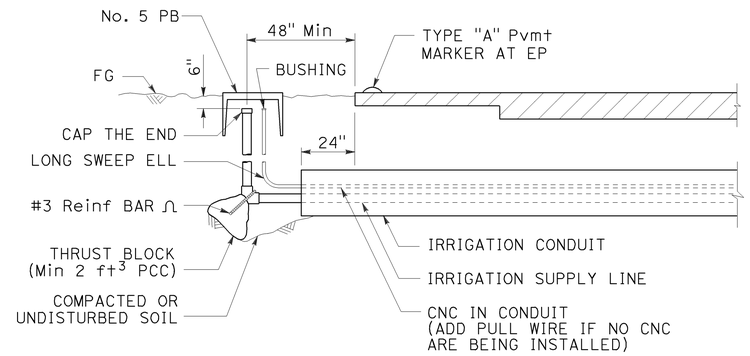

SECTION

IRRIGATION CONDUIT

UNDER TRAVELED WAY

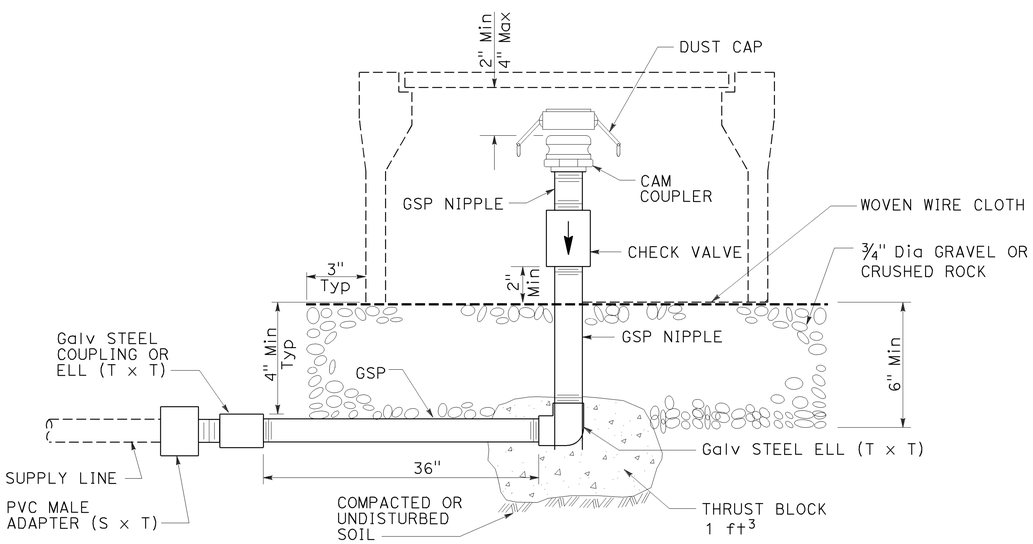

ELEVATION

CAM COUPLER ASSEMBLY

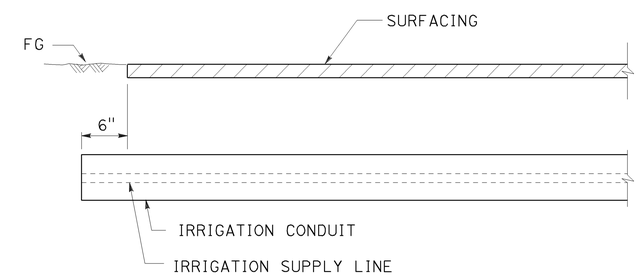

SECTION

IRRIGATION CONDUIT

UNDER SIDEWALKS, DRIVEWAYS AND PATHS

STATE OF CALIFORNIA
DEPARTMENT OF TRANSPORTATION

LANDSCAPE DETAILS

NO SCALE

RSP H9 DATED JULY 19, 2013 SUPERSEDES STANDARD PLAN H9
DATED MAY 20, 2011 - PAGE 226 OF THE STANDARD PLANS BOOK DATED 2010.

REVISED STANDARD PLAN RSP H9

2010 REVISED STANDARD PLAN RSP H9

6-28-13

DIST	COUNTY	ROUTE	POST MILES TOTAL PROJECT	SHEET No.	TOTAL SHEETS
04	Nap	29	47.0/47.2	95	146

REGISTERED CIVIL ENGINEER — DATE 6-11-14

6-23-14
PLANS APPROVAL DATE

The State of California or its officers or agents shall not be responsible for the accuracy or completeness of electronic copies of this plan sheet.

REGISTERED PROFESSIONAL ENGINEER — AIMAN MALAK — No. C73369 — Exp. 12-31-2014 — CIVIL — STATE OF CALIFORNIA

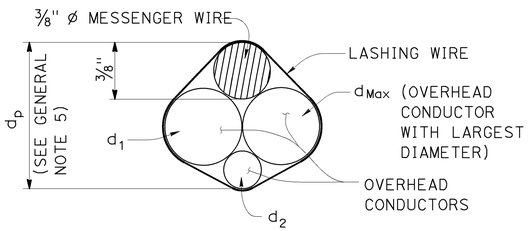

$d_p = 3/8" + d_{Max} + 0.30 * (d_1 + d_2 + \ldots d_n)$

PROJECTED DEPTH OF OVERHEAD BUNDLE, (d_p)

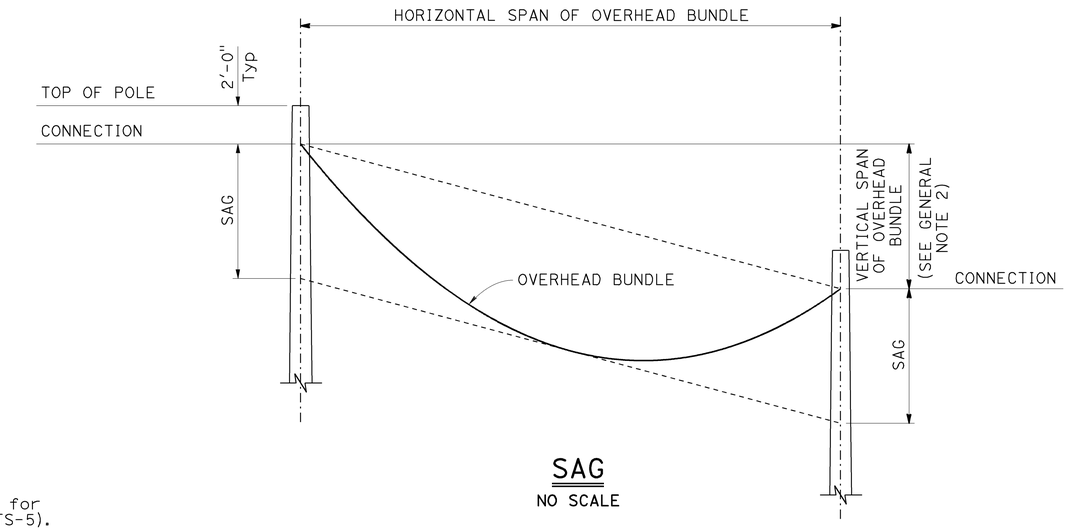

SAG

NO SCALE

Design: AASHTO Standard Specifications for Structural Supports for Highway Signs, Luminaires and Traffic Signals, Fifth Edition (LTS-5).

GROUP LOAD COMBINATIONS:

I Dead Load
II Dead Load + Wind Load
III Dead Load + 0.5 (Wind Load) + Ice Load
IV Fatigue: Not used

LOADING:

Wind Loading: 85 mph (3-second gust)
Wind Recurrence Interval: 10 years
Combined height, exposure, and elevated terrain factor = 1.05 (Exposure C, structure is not located on or over the top half of a ridge, hill, or escarpment)

Ice Loading: 3.0 psf on surfaces, 0.60 in radial thickness of ice at a unit weight of 60 pcf on overhead bundles

BASIC DESIGN VALUES:

Timber Poles: Fb = 1850 psi
Fv = 110 psi
Fcp = 230 psi
Fc = 950 psi
E = 1500 x 10^3 psi

DESIGN WIRE BREAKING STRENGTHS:

ASTM A475, Utilities Grade, 7 strand modified by termination efficiency factor of 0.8

FOUNDATION DESIGN NOTES:

1. Pole embedment depth design is based on Broms' approximate procedure as described in Article 13.6 of AASHTO LTS-5.

2. Embedment depth is calculated based on following soil parameters,
Cohesive Soil:
Shear strength of soil c = 1500 psf.
Cohesionless Soil:
Ø = 30 deg, γ = 120 pcf.
Soil assumed to be unsaturated.

3. An overload factor of 2.0 and an undercapacity factor of 0.7 were used for safety factor of 2.86.

4. Allowable vertical bearing pressure at the end bearing of poles is 3000 psf at 6 feet or more embedment.

THE CONTRACTOR SHALL VERIFY ALL CONTROLLING FIELD DIMENSIONS BEFORE ORDERING OR FABRICATING ANY MATERIAL.

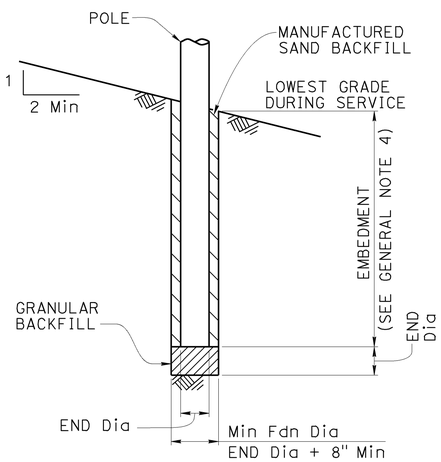

POLE FOUNDATION

GENERAL NOTES:

1. The messenger wire and any combination of overhead conductors must not exceed either a self weight of 3.0 lb/ft or the maximun d_p.

2. The maximum vertical span is 10% of the horizontal span.

3. For poles with adjacent unbalanced horizontal spans, the shortest horizontal span must be at least 50% of the largest horizontal span.

4. Add 2'-0" for slopes above 1V:4H.

5. For a pole supporting multiple spans, calculate d_p for each span and use the largest value.

6. Do not exceed the attachments shown.

DIAMETERS AND SELF WEIGHT OF OVERHEAD CONDUCTORS

CONDUCTOR OR CABLE TYPE	DIAMETER d (in)	WEIGHT w (plf)
3 CONDUCTOR SIGNAL CABLE (3CSC)	0.400	0.0980
5 CONDUCTOR SIGNAL CABLE (5CSC)	0.500	0.1560
9 CONDUCTOR SIGNAL CABLE (9CSC)	0.650	0.2760
12 CONDUCTOR SIGNAL CABLE (12CSC)	0.800	0.3970
28 CONDUCTOR SIGNAL CABLE (28CSC)	0.900	0.6490
1-#14	0.166	0.0235
1-#12	0.185	0.0330
1-#10	0.210	0.0476
1-#8	0.271	0.0774
1-#6	0.310	0.1130
1-#4	0.359	0.1690
1-#3	0.388	0.2080
1-#2	0.420	0.2560
1-#1	0.498	0.3340
6-CONDUCTOR SIGNAL INTERCONNECT CABLE (SIC)	0.350	0.0860
12-CONDUCTOR SIGNAL INTERCONNECT CABLE (SIC)	0.500	0.1440
DETECTOR LEAD-IN CABLE (DLC)	0.310	0.0440
12 to 48-STRAND FIBER OPTIC CABLE (48FOC)	0.424	0.0600
72-STRAND FIBER OPTIC CABLE (72FOC)	0.484	0.0770
96-STRAND FIBER OPTIC CABLE (96FOC)	0.535	0.1050
144-STRAND FIBER OPTIC CABLE (144FOC)	0.670	0.1890
3/8" Ø MESSENGER WIRE	0.375	0.2730

NO SCALE

BRANCH CHIEF DAVID A. NEUMANN

	BY	CHECKED
DESIGN	AIMAN MALAK	YU SONG
DETAILS	HUNG NGUYEN	AIMAN MALAK
QUANTITIES	X	X

STATE OF CALIFORNIA
DEPARTMENT OF TRANSPORTATION

DIVISION OF ENGINEERING SERVICES
STRUCTURE DESIGN
SPECIAL DESIGN BRANCH

BRIDGE No. X
POST MILE 47.0/47.2

TEMPORARY WOOD POLES
GENERAL NOTES

SES-1

STRUCTURES DESIGN SPECIAL DESIGN SHEET (ENGLISH) (REV. 09-01-10)

ORIGINAL SCALE IN INCHES FOR REDUCED PLANS 0 1 2 3

UNIT: 3619
PROJECT NUMBER & PHASE: 0400001104
CONTRACT NO.: 04-4a0901

DISREGARD PRINTS BEARING EARLIER REVISION DATES

REVISION DATES 1-28-14

SHEET 1 OF 5

FILE => 04-4a0901-1.dgn

USERNAME => s128478 DATE PLOTTED => 10-JUL-2014 TIME PLOTTED => 09:03

DIST	COUNTY	ROUTE	POST MILES TOTAL PROJECT	SHEET No.	TOTAL SHEETS
04	Nap	29	47.0/47.2	96	146

REGISTERED CIVIL ENGINEER — DATE 6-11-14

6-23-14
PLANS APPROVAL DATE

The State of California or its officers or agents shall not be responsible for the accuracy or completeness of electronic copies of this plan sheet.

REGISTERED PROFESSIONAL ENGINEER — AIMAN MALAK — No. C73369 — Exp. 12-31-2014 — CIVIL — STATE OF CALIFORNIA

LEGEND

- Wood Pole No Attachments
- A — Wood Pole with Attachments
- —OH— Overhead Bundle

POLE SELECTION TABLE

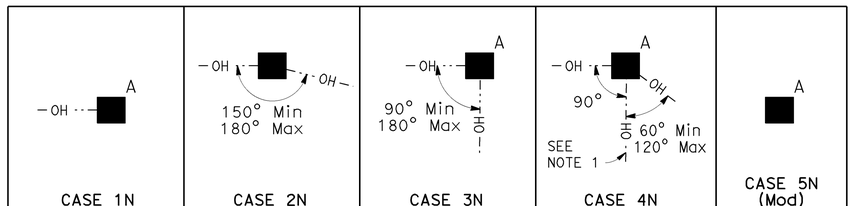

			CASE 1N				CASE 2N				CASE 3N				CASE 4N				CASE 5N (Mod)
		MAXIMUM d_p	1"	1.5"	2.0"	2.5"	1"	1.5"	2.0"	2.5"	1.0"	1.5"	2.0"	2.5"	1"	1.5"	2.0"	2.5"	SEE NOT 3
OVERHEAD BUNDLE HORIZONTAL SPAN Max	50'	MINIMUM POLE CLASS	H-1	H-2	H-2	H-2	4	3	2	1	H-2	H-2	H-3	H-3	H-4	H-4	H-4	H-5	CLASS 1 E = 10'
		POLE EMBEDMENT (E)	11'				10'				11'				12'				
	100'	MINIMUM POLE CLASS	H-2	H-3	H-4	H-5	1	H-1	H-2	H-3	H-4	H-5	H-5	H-6	H-5	H-5	H-6		
		POLE EMBEDMENT (E)	12'				11'				12'				12'				
	150'	MINIMUM POLE CLASS	H-4	H-5	H-6		H-1	H-2	H-3	H-5	H-6				H-6				
		POLE EMBEDMENT (E)	12'				12'				12'				12'				
	200'	MINIMUM POLE CLASS	H-5	H-6			H-2	H-3	H-5										
		POLE EMBEDMENT (E)	12'				12'												

1. CCTV camera assembly or vehicle detection system
2. Overhead bundle consisting of a 3/8" ø messenger wire and overhead conductors and lashing wire.
3. Luminaire with mast arm
4. Pedestrian pushbutton
5. Signal face with 3 indications or single sheet sign panel (10 SQFT Max)
6. Riser with weather head as required
7. Pull box as required
8. Grounding as required
9. Single section flashing beacon or single sheet sign panel (4 SQFT Max)
10. Single sheet sign panel (4' x 4' Max) or signal face with 3 indications
11. Flashing beacon control assembly
12. NEMA 3R enclosure, 26"(W) x 56"(H) x 12"(D) Max dimensions. Max weight including batteries, 450 lb
13. 2-section 12" flashing beacon

NOTES:

1. In addition to other restrictions on maximum horizontal span, this horizontal span must not exceed 100'.
2. Cases 1N, 3N and 4N may substitute the attachments shown in Case 5N if the photovoltaic panel is not included.
3. 3/8" ø messenger wire with 2 # 10 overhead conductors max.
4. All temporary wood poles must be protected from traffic by means according to California Department of Transportation Highway Manual as required See "Roadway Plans".

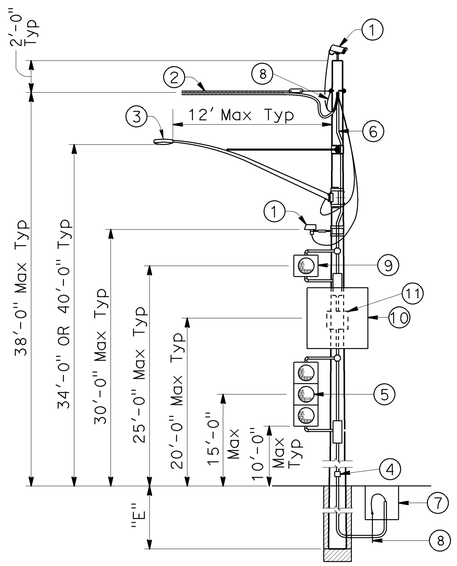

CASE 1N
POLE AT DEAD END WITH ATTACHMENTS
SEE NOTE 2

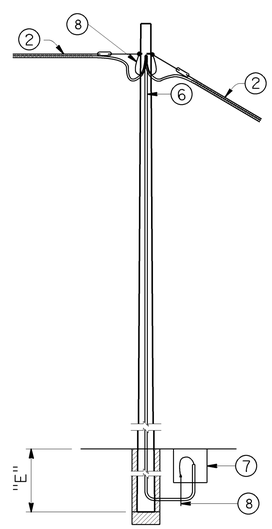

CASE 2N
POLE AT TANGENT WITHOUT ATTACHMENTS

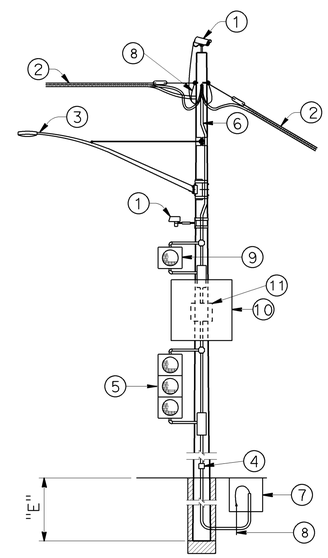

CASE 3N
POLE AT TANGENT OR CORNER WITH ATTACHMENTS
SEE NOTE 2

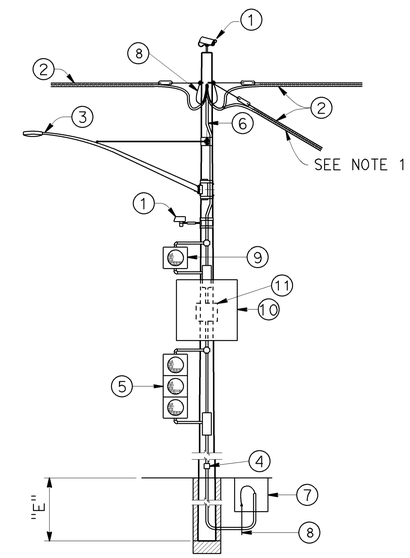

CASE 4N
POLE AT JUNCTION WITH ATTACHMENTS
SEE NOTE 2

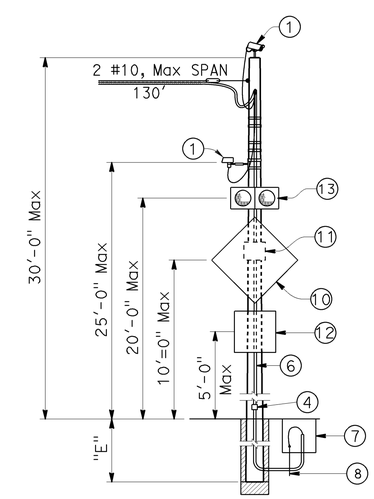

CASE 5N (Mod)
POLE WITH FLASHING BEACON

NO SCALE

THE CONTRACTOR SHALL VERIFY ALL CONTROLLING FIELD DIMENSIONS BEFORE ORDERING OR FABRICATING ANY MATERIAL.

BRANCH CHIEF	DAVID A. NEUMANN		
DESIGN	BY AIMAN MALAK	CHECKED YU SONG	
DETAILS	BY HUNG NGUYEN	CHECKED AIMAN MALAK	
QUANTITIES	BY X	CHECKED X	

STATE OF CALIFORNIA
DEPARTMENT OF TRANSPORTATION

DIVISION OF ENGINEERING SERVICES
STRUCTURE DESIGN
SPECIAL DESIGN BRANCH

BRIDGE No. X
POST MILE 47.0/47.2

TEMPORARY WOOD POLES
NON-GUYED-NO SIGNALS ON SPANS

SES-2

STRUCTURES DESIGN SPECIAL DESIGN SHEET (ENGLISH) (REV. 09-01-10)

ORIGINAL SCALE IN INCHES FOR REDUCED PLANS 0 1 2 3

UNIT: 3619
PROJECT NUMBER & PHASE: 0400001104
CONTRACT NO.: 04-4a0901

DISREGARD PRINTS BEARING EARLIER REVISION DATES

REVISION DATES 1-28-14

SHEET 2 OF 5

FILE => 04-4a0901-2.dgn

USERNAME => s128478 DATE PLOTTED => 10-JUL-2014 TIME PLOTTED => 09:03

DIST	COUNTY	ROUTE	POST MILES TOTAL PROJECT	SHEET No.	TOTAL SHEETS
04	Nap	29	47.0/47.2	97	146

REGISTERED CIVIL ENGINEER — DATE 6-11-14

6-23-14
PLANS APPROVAL DATE

The State of California or its officers or agents shall not be responsible for the accuracy or completeness of electronic copies of this plan sheet.

REGISTERED PROFESSIONAL ENGINEER — AIMAN MALAK — No. C73369 — Exp. 12-31-2014 — CIVIL — STATE OF CALIFORNIA

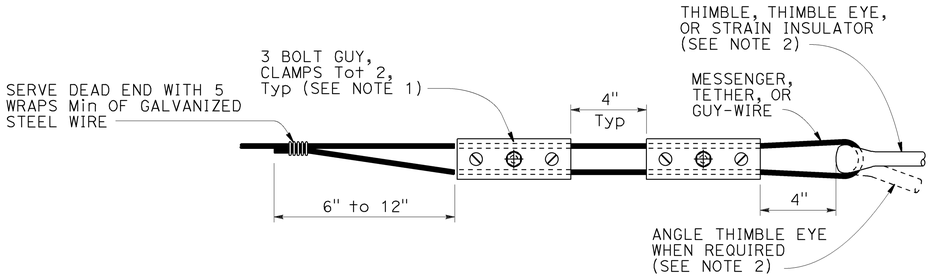

ALTERNATIVE TERMINATION OF MESSENGER WIRES USING GUY CLAMPS

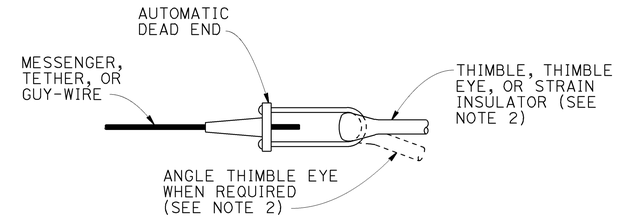

TERMINATION OF WIRES USING AUTOMATIC DEAD END

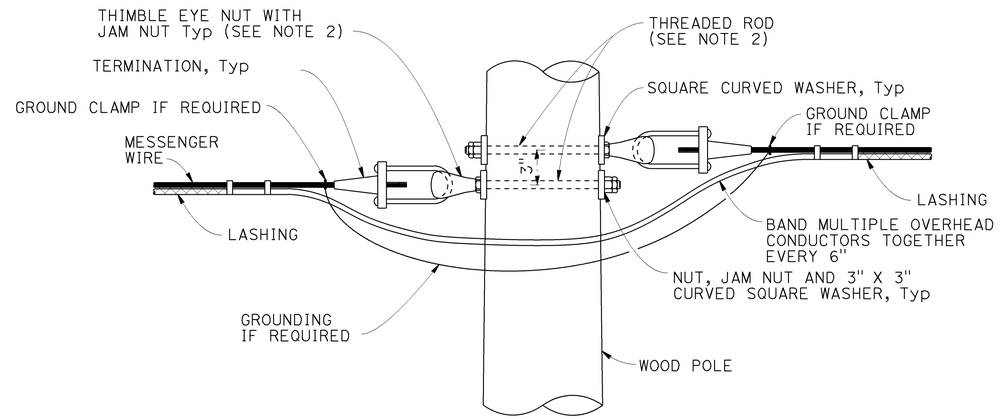

POLE AT TANGENT OR CORNER CONNECTION

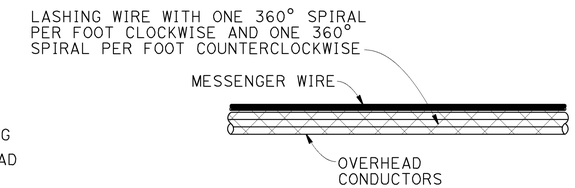

DOUBLE LASHING DETAIL

USE IF d_p IS GREATER THAN 1½"

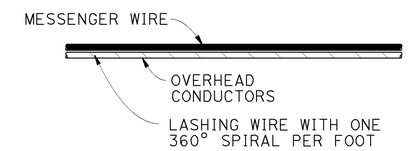

TYPICAL LASHING DETAIL

USE IF d_p IS 1½" OR LESS

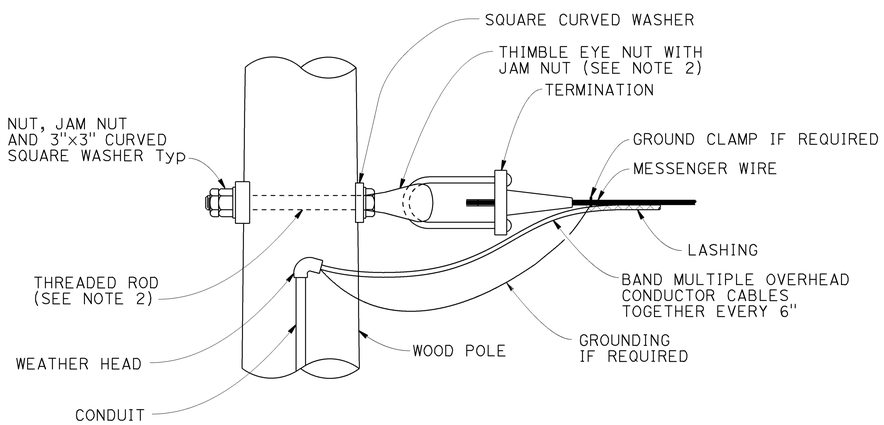

POLE AT DEAD END CONNECTION

THE CONTRACTOR SHALL VERIFY ALL CONTROLLING FIELD DIMENSIONS BEFORE ORDERING OR FABRICATING ANY MATERIAL.

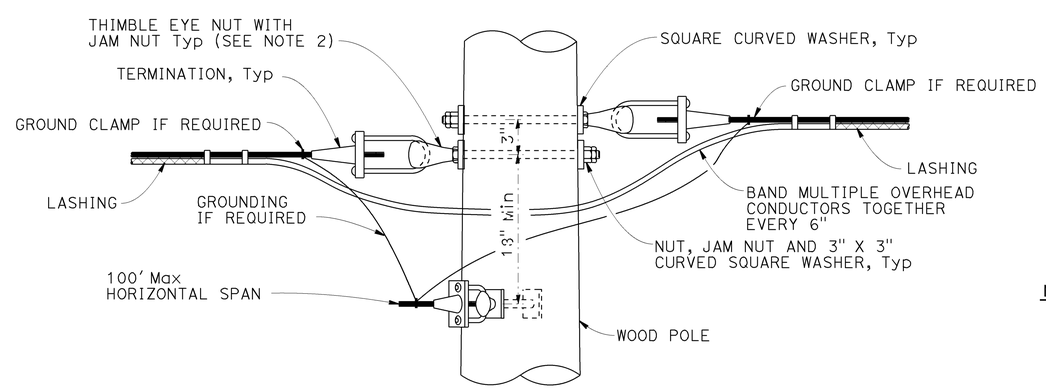

POLE AT JUNCTION CONNECTION

NOTES:

1. For guy wires use 3 clamps.
2. Use ⅝" ø except ¾" ø at guyed wires

NO SCALE

BRANCH CHIEF	DAVID A. NEUMANN	DESIGN	BY AIMAN MALAK	CHECKED YU SONG
		DETAILS	BY HUNG NGUYEN	CHECKED AIMAN MALAK
		QUANTITIES	BY X	CHECKED X

STATE OF CALIFORNIA — DEPARTMENT OF TRANSPORTATION

DIVISION OF ENGINEERING SERVICES — STRUCTURE DESIGN — SPECIAL DESIGN BRANCH

BRIDGE No. X — POST MILE 47.0/47.2

TEMPORARY WOOD POLES
DETAILS NO. 1

SES-3

STRUCTURES DESIGN SPECIAL DESIGN SHEET (ENGLISH) (REV. 09-01-10)

ORIGINAL SCALE IN INCHES FOR REDUCED PLANS 0 1 2 3

UNIT: 3619
PROJECT NUMBER & PHASE: 0400001104
CONTRACT NO.: 04-4a0901

DISREGARD PRINTS BEARING EARLIER REVISION DATES → 1-28-14

SHEET 3 OF 5

FILE => 04-4a0901-3.dgn

USERNAME => s128418 DATE PLOTTED => 10-JUL-2014 TIME PLOTTED => 09:03

DIST	COUNTY	ROUTE	POST MILES TOTAL PROJECT	SHEET No.	TOTAL SHEETS
04	Nap	29	47.0/47.2	98	146

REGISTERED CIVIL ENGINEER 6-11-14 DATE

6-23-14
PLANS APPROVAL DATE

REGISTERED PROFESSIONAL ENGINEER YU SONG No. C71687 Exp. 12/31/15 CIVIL STATE OF CALIFORNIA

The State of California or its officers or agents shall not be responsible for the accuracy or completeness of electronic copies of this plan sheet.

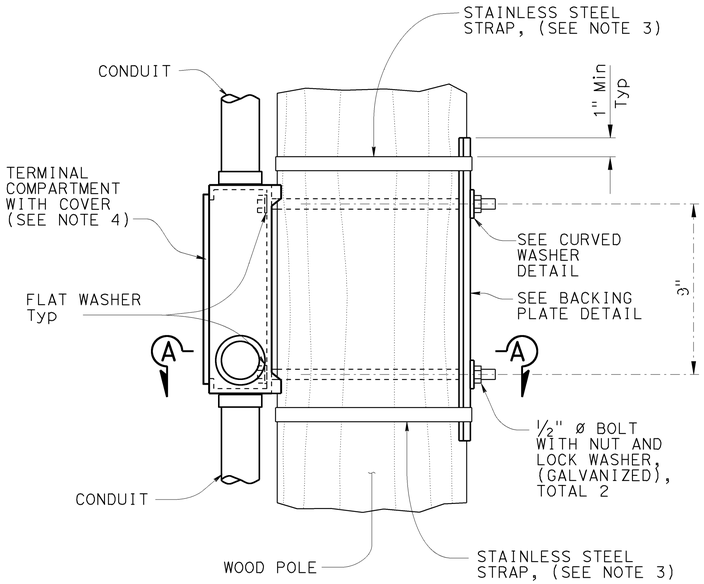

ELEVATION

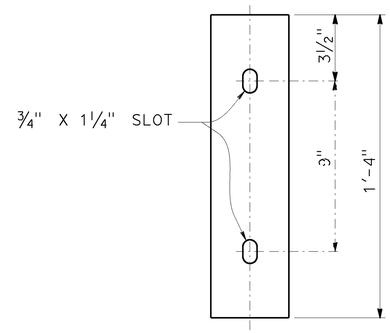

ELEVATION

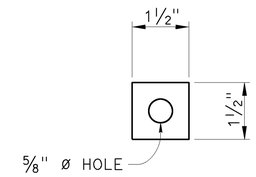

ELEVATION

NOTES:

1. Verify pole dimensions at terminal compartment for fabrication of backing plate and curved washer.
2. Galvanize backing plate after fabrication.
3. ¾" x 0.044" minimum, rounded edge stainless steel straps, double wrapped with 2" long bend under stainless steel strap buckle.
4. For details not shown see Standard Plan ES-4D.

PLAN

BACKING PLATE DETAIL

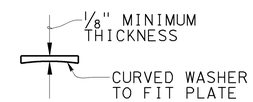

PLAN

CURVED WASHER DETAIL

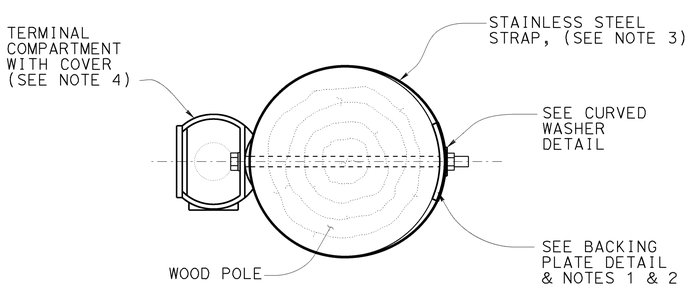

SECTION A-A

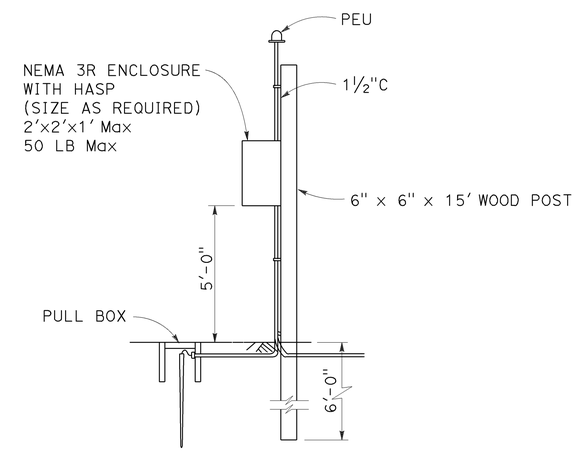

TEMPORARY WOOD POST DETAIL

SIDE MOUNTING TERMINAL COMPARTMENT

THE CONTRACTOR SHALL VERIFY ALL CONTROLLING FIELD DIMENSIONS BEFORE ORDERING OR FABRICATING ANY MATERIAL.

NO SCALE

BRANCH CHIEF DAVID A. NEUMANN

	BY	CHECKED
DESIGN	AIMAN MALAK	YU SONG
DETAILS	HUNG NGUYEN	AIMAN MALAK
QUANTITIES	X	X

STATE OF CALIFORNIA DEPARTMENT OF TRANSPORTATION

DIVISION OF ENGINEERING SERVICES STRUCTURE DESIGN SPECIAL DESIGN BRANCH

BRIDGE No. X
POST MILE 47.0/47.2

TEMPORARY WOOD POLES DETAILS NO.2

SES-4

STRUCTURES DESIGN SPECIAL DESIGN SHEET (ENGLISH) (REV. 09-01-10)

ORIGINAL SCALE IN INCHES FOR REDUCED PLANS 0 1 2 3

UNIT: 3619
PROJECT NUMBER & PHASE: 0400001104
CONTRACT NO.: 04-4a0901

DISREGARD PRINTS BEARING EARLIER REVISION DATES

REVISION DATES 1-28-14

SHEET 4 OF 5

FILE => 04-4a0901-4.dgn

USERNAME => s128478 DATE PLOTTED => 10-JUL-2014 TIME PLOTTED => 09:03

DIST	COUNTY	ROUTE	POST MILES TOTAL PROJECT	SHEET No.	TOTAL SHEETS
04	Nap	29	47.0/47.2	99	146

REGISTERED CIVIL ENGINEER — DATE 6-11-14

6-23-14
PLANS APPROVAL DATE

REGISTERED PROFESSIONAL ENGINEER — AIMAN MALAK — No. C73369 — Exp. 12-31-2014 — CIVIL — STATE OF CALIFORNIA

The State of California or its officers or agents shall not be responsible for the accuracy or completeness of electronic copies of this plan sheet.

NOTES:

1. Luminaire mast arms must be in compliance with Standard Plan ES-6D with noted modifications.
2. Verify pole dimensions at tie-rod attachment height. Fabricate 8" flat bar with "L" Dimension to maintain an open gap between flanges in finished installation.
3. Not all screw heads and bolt heads are shown for clarity.
4. Mast arm not shown for clarity.

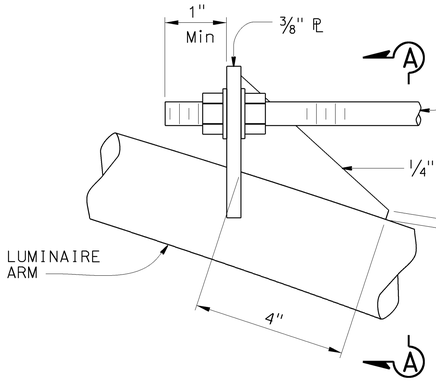

ELEVATION

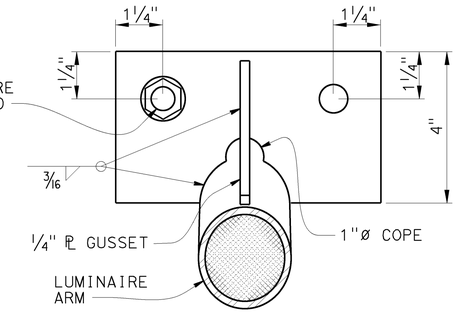

SECTION A-A

DETAIL A
TIE-ROD AT LUMINAIRE ARM
NO SCALE

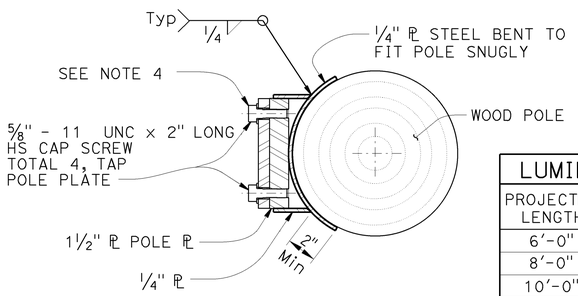

SECTION E-E

LUMINAIRE MAST ARM DATA			
PROJECTED LENGTH	N RISE	Min OD AT POLE	NOMINAL THICKNESS
6'-0"	2'-0"±	3 1/4"	0.1196"
8'-0"	2'-6"±	3 1/2"	
10'-0"	3'-3"±	3 7/8"	
12'-0"	4'-3"±		

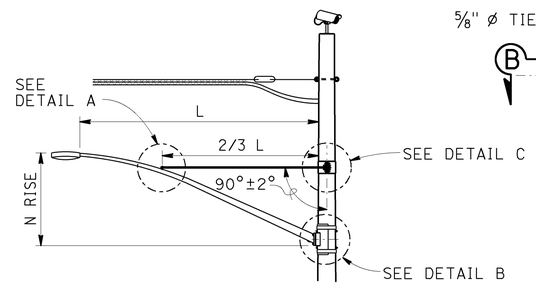

LUMINAIRE MAST ARM

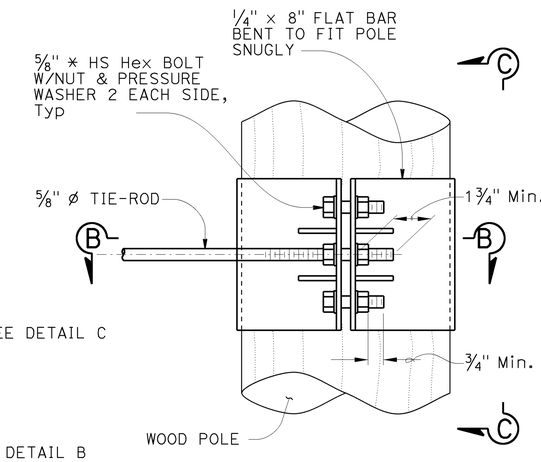

ELEVATION

NOTE:
Not all screw and bolt heads shown for clarity.

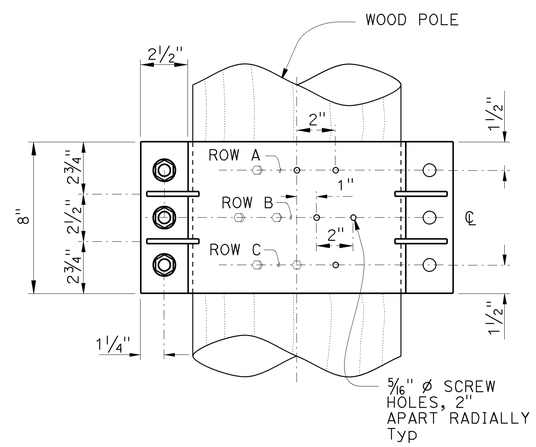

VIEW C-C

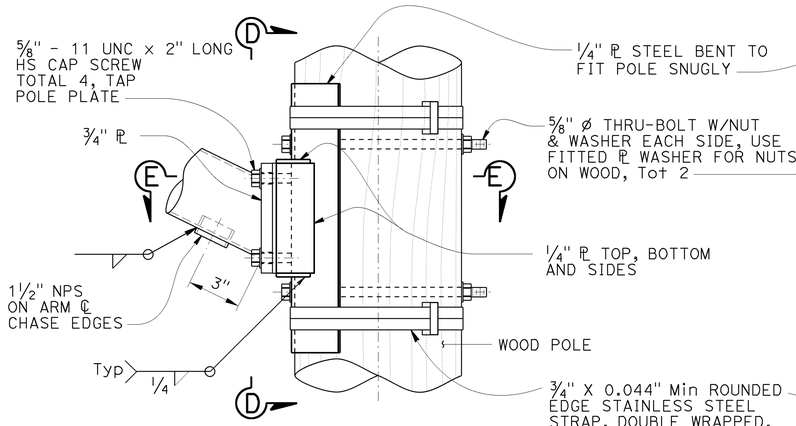

ELEVATION

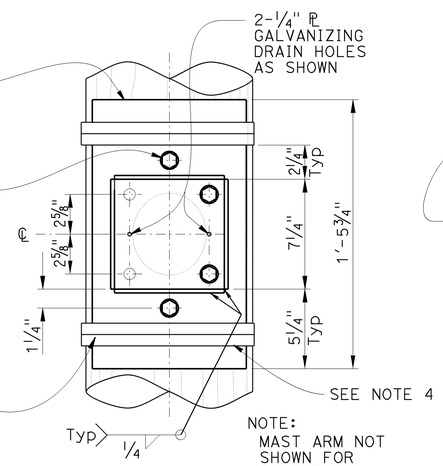

VIEW D-D

DETAIL B
ARM CONNECTION DETAILS
NO SCALE

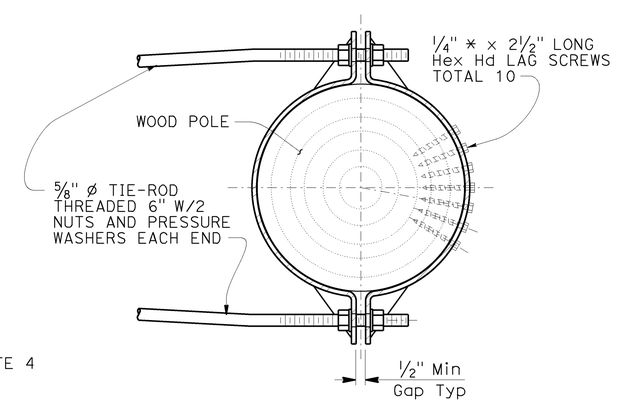

SECTION B-B

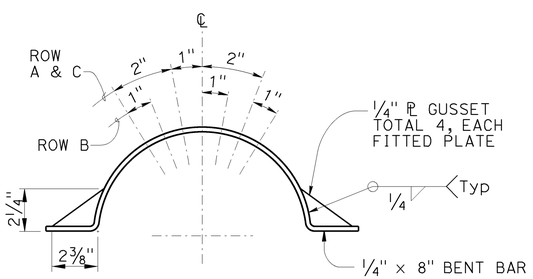

LAG SCREW AND
GUSSET PLATE LAYOUT

DETAIL C
TIE-ROD AT POLE
NO SCALE

THE CONTRACTOR SHALL VERIFY ALL CONTROLLING FIELD DIMENSIONS BEFORE ORDERING OR FABRICATING ANY MATERIAL.

BRANCH CHIEF DAVID A. NEUMANN	DESIGN	BY AIMAN MALAK	CHECKED YU SONG
	DETAILS	BY HUNG NGUYEN	CHECKED AIMAN MALAK
	QUANTITIES	BY X	CHECKED X

STATE OF CALIFORNIA
DEPARTMENT OF TRANSPORTATION

DIVISION OF ENGINEERING SERVICES
STRUCTURE DESIGN
SPECIAL DESIGN BRANCH

BRIDGE No. X
POST MILE 47.0/47.2

TEMPORARY WOOD POLES
DETAILS NO.3

SES-5

STRUCTURES DESIGN SPECIAL DESIGN SHEET (ENGLISH) (REV. 09-01-10)

ORIGINAL SCALE IN INCHES FOR REDUCED PLANS 0 1 2 3

UNIT: 3619
PROJECT NUMBER & PHASE: 0400001104
CONTRACT NO.: 04-4a0901

DISREGARD PRINTS BEARING EARLIER REVISION DATES

REVISION DATES 1-28-14

SHEET 5 OF 5

FILE => 04-4a0901-5.dgn

USERNAME => s128478 DATE PLOTTED => 10-JUL-2014 TIME PLOTTED => 09:03

DIST	COUNTY	ROUTE	POST MILES TOTAL PROJECT	SHEET No.	TOTAL SHEETS
04	Nap	29	47.0/47.2	100	146

Mary K Beall 5/28/14
REGISTERED CIVIL ENGINEER DATE

June 23, 2014
PLANS APPROVAL DATE

REGISTERED PROFESSIONAL ENGINEER MARY K. BEALL No. C76357 Exp. 12/31/14 CIVIL STATE OF CALIFORNIA

The State of California or its officers or agents shall not be responsible for the accuracy or completeness of scanned copies of this plan sheet.

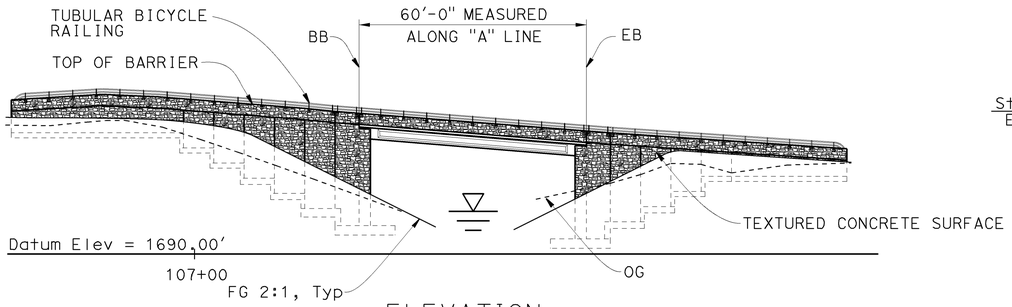

ELEVATION
1"=20'-0"

PROFILE GRADE
NO SCALE

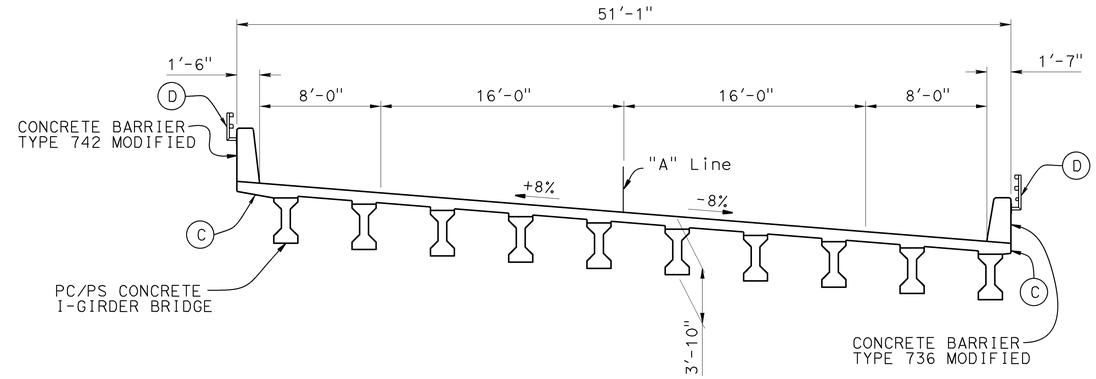

TYPICAL SECTION
1"= 5'-0"

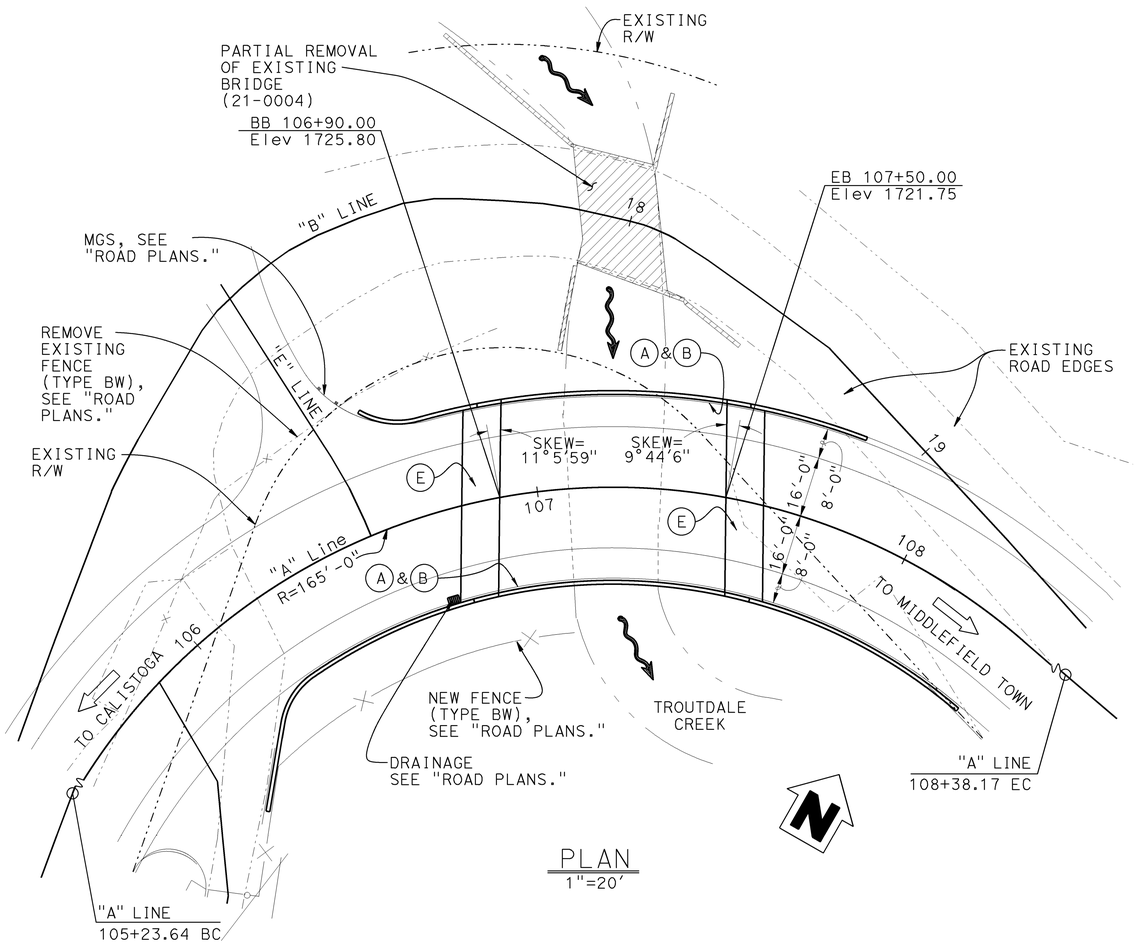

PLAN
1"=20'

NOTES:

(A) Paint "Br. No. 21-0113"
(B) Paint "TROUTDALE CREEK BRIDGE"
(C) Overhang width varies along the bridge.
(D) Tubular bicycle railing
(E) Structure Approach Type EQ(10)

LEGEND:

Indicates existing structure to be removed (portion)

QUANTITIES

WORK AREA MONITORING (BRIDGE)	LUMP	SUM
BRIDGE REMOVAL (PORTION)	LUMP	SUM
STRUCTURE EXCAVATION (BRIDGE)	1,200	CY
STRUCTURE EXCAVATION (RETAINING WALL)	2,388	CY
STRUCTURE BACKFILL (BRIDGE)	1,145	CY
STRUCTURE BACKFILL (RETAINING WALL)	2,435	CY
STRUCTURAL CONCRETE, BRIDGE FOOTING	229	CY
STRUCTURAL CONCRETE, BRIDGE	469	CY
STRUCTURAL CONCRETE, RETAINING WALL	298	CY
STRUCTURAL CONCRETE, APPROACH SLAB (TYPE EQ)	27	CY
MINOR CONCRETE	6	CY
ASHLAR STONE TEXTURE	2,016	SQFT
FURNISH PRECAST PRESTRESSED CONCRETE GIRDER (50'-60')	10	EA
ERECT PRECAST PRESTRESSED CONCRETE GIRDER	10	EA
JOINT SEAL (MR 1/2")	101	LF
BAR REINFORCING STEEL (BRIDGE)	125,154	LB
BAR REINFORCING STEEL (RETAINING WALL)	40,508	LB
MINOR CONCRETE (GUTTER) (LF)	38	LF
TUBULAR BICYCLE RAILING	348	LF
CONCRETE BARRIER (TYPE 736 MODIFIED)	211	LF
CONCRETE BARRIER (TYPE 742 MODIFIED)	145	LF

BRIAN MORI
DESIGN ENGINEER

	BY	CHECKED
DESIGN	Nora Kyo	Mary Beall
DETAILS	E. Hallstrom	Mary Beall
QUANTITIES	Nora Kyo	E. Hallstrom/M. Beall

LOAD & RESISTANCE FACTOR DESIGN — LIVE LOADING: HL93 W/"LOW-BOY"; PERMIT DESIGN VEHICLE

	BY	CHECKED
LAYOUT	Nora Kyo	Mary Beall
SPECIFICATIONS	Dave Klein	PLANS AND SPECS COMPARED Dave Klein

ORIGINAL SCALE IN INCHES FOR REDUCED PLANS 0 1 2 3

STATE OF CALIFORNIA
DEPARTMENT OF TRANSPORTATION

DIVISION OF ENGINEERING SERVICES
STRUCTURE DESIGN
DESIGN BRANCH 8

BRIDGE NO. 21-0113
POST MILE 47.13

TROUTDALE CREEK BRIDGE (REPLACEMENT)
GENERAL PLAN

UNIT: 3593
PROJECT NUMBER & PHASE: 04000011041
CONTRACT NO.: 04-4A0901

DISREGARD PRINTS BEARING EARLIER REVISION DATES
REVISION DATES 1/30/13 5/28/13 3/18/14

SHEET 1 OF 30

USERNAME => s128530 DATE PLOTTED => 08-JUL-2014 TIME PLOTTED => 16:12

STRUCTURES DESIGN GENERAL PLAN SHEET (ENGLISH) (REV.09-01-10)

FILE => 21-0113-a-gp.dgn