Dist	COUNTY	ROUTE	POST MILES TOTAL PROJECT	SHEET No.	TOTAL SHEETS
04	Nap	29	47.0/47.2	1	146

STATE OF CALIFORNIA

DEPARTMENT OF TRANSPORTATION

ACSTP-P029(117)E

PROJECT PLANS FOR CONSTRUCTION ON

STATE HIGHWAY

IN NAPA COUNTY
ABOUT 6.0 MILES NORTH OF CALISTOGA
AT TROUTDALE CREEK BRIDGE

TO BE SUPPLEMENTED BY STANDARD PLANS DATED 2010

INDEX OF PLANS

SHEET No.	DESCRIPTION
1	TITLE SHEET AND LOCATION MAP
2 - 3	TYPICAL CROSS SECTIONS
4	LAYOUT
5	PROFILE AND SUPERELEVATION DIAGRAM
6 - 10	CONSTRUCTION DETAILS
11 - 12	TEMPORARY WATER POLLUTION CONTROL DETAILS AND QUANTITIES
13 - 16	CONTOUR GRADING
17 - 31	DRAINAGE PLAN, PROFILES, DETAILS AND QUANTITIES
32	CONSTRUCTION AREA SIGNS
33 - 36	STAGE CONSTRUCTION
37 - 41	TRAFFIC HANDLING PLAN AND QUANTITIES
42 - 43	PAVEMENT DELINEATION PLAN AND QUANTITIES
44 - 46	SIGN PLAN, DETAILS AND QUANTITIES
47	SUMMARY OF QUANTITIES
48 - 51	IRRIGATION SPRINKLER SCHEDULE, PLANS AND QUANTITIES
52 - 53	PLANT LIST AND PLAN
54 - 55	LANDSCAPE DETAILS AND QUANTITIES
56 - 59	EROSION CONTROL LEGEND, PLAN, DETAILS AND QUANTITIES
60 - 64	ELECTRICAL PLAN, DETAILS AND QUANTITIES
64a~~65~~ - 94	REVISED STANDARD PLANS STRUCTURE PLANS
95 - 146	GENERAL PLAN

3

THE STANDARD PLANS LIST APPLICABLE TO THIS CONTRACT IS INCLUDED IN THE NOTICE TO BIDDERS AND SPECIAL PROVISIONS BOOK.

LOCATION MAP

NEW NUMBER OF TOTAL SHEETS- ####
SEE INDEX OF PLANS FOR ADDED/REVISED SHEET NUMBERS

PARTIAL REMOVAL OF EXISTING TROUTDALE CREEK BRIDGE
BRIDGE No. 21-0004 PM 47.1

LOCATION OF CONSTRUCTION
TROUTDALE CREEK BRIDGE
BRIDGE No. 21-0113 PM R47.1

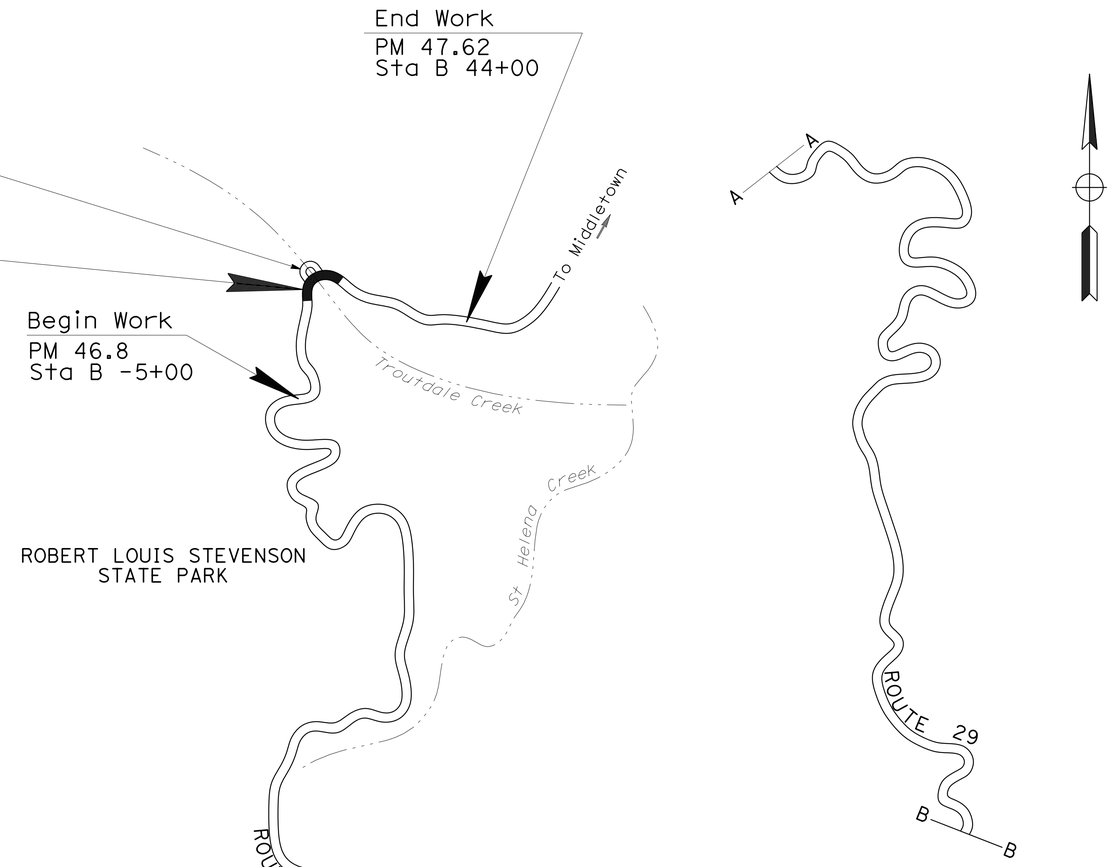

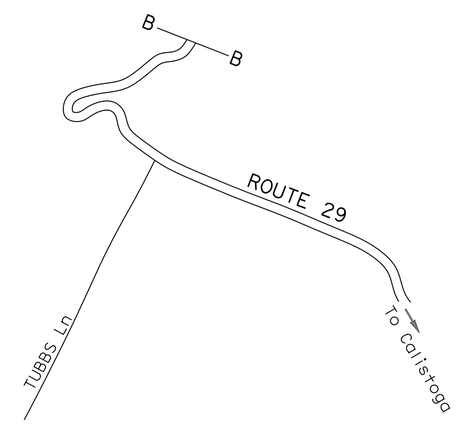

CALISTOGA

3 **REPLACED PER ADDENDUM No. 3 DATED JANUARY 13, 2015** NO SCALE

THE CONTRACTOR SHALL POSSESS THE CLASS (OR CLASSES) OF LICENSE AS SPECIFIED IN THE "NOTICE TO BIDDERS."

4/25/14
PROJECT ENGINEER REGISTERED CIVIL ENGINEER — DATE

June 23, 2014
PLANS APPROVAL DATE

REGISTERED PROFESSIONAL ENGINEER Jason R. Phoen No. 57553 Exp. 12-31-15 CIVIL STATE OF CALIFORNIA

THE STATE OF CALIFORNIA OR ITS OFFICERS OR AGENTS SHALL NOT BE RESPONSIBLE FOR THE ACCURACY OR COMPLETENESS OF SCANNED COPIES OF THIS PLAN SHEET.

CONTRACT No.	04-4A0904
PROJECT ID	0400001104

PROJECT MANAGER: KELLY HIRSCHBERG
DESIGN MANAGER: STEWART LEE

LAST REVISION 03-05-14 | DATE PLOTTED => 13-JAN-2015 | TIME PLOTTED => 10:53

Dist	COUNTY	ROUTE	POST MILES TOTAL PROJECT	SHEET No.	TOTAL SHEETS
04	Nap	29	47.0/47.2	17	146

REGISTERED CIVIL ENGINEER 4/18/14 DATE

6-23-14
PLANS APPROVAL DATE

REGISTERED PROFESSIONAL ENGINEER Khai Shoon Leong No. 76183 Exp. 6-30-14 CIVIL STATE OF CALIFORNIA

THE STATE OF CALIFORNIA OR ITS OFFICERS OR AGENTS SHALL NOT BE RESPONSIBLE FOR THE ACCURACY OR COMPLETENESS OF SCANNED COPIES OF THIS PLAN SHEET.

NOTE:

FOR ACCURATE RIGHT OF WAY DATA, CONTACT RIGHT OF WAY ENGINEERING AT THE DISTRICT OFFICE.

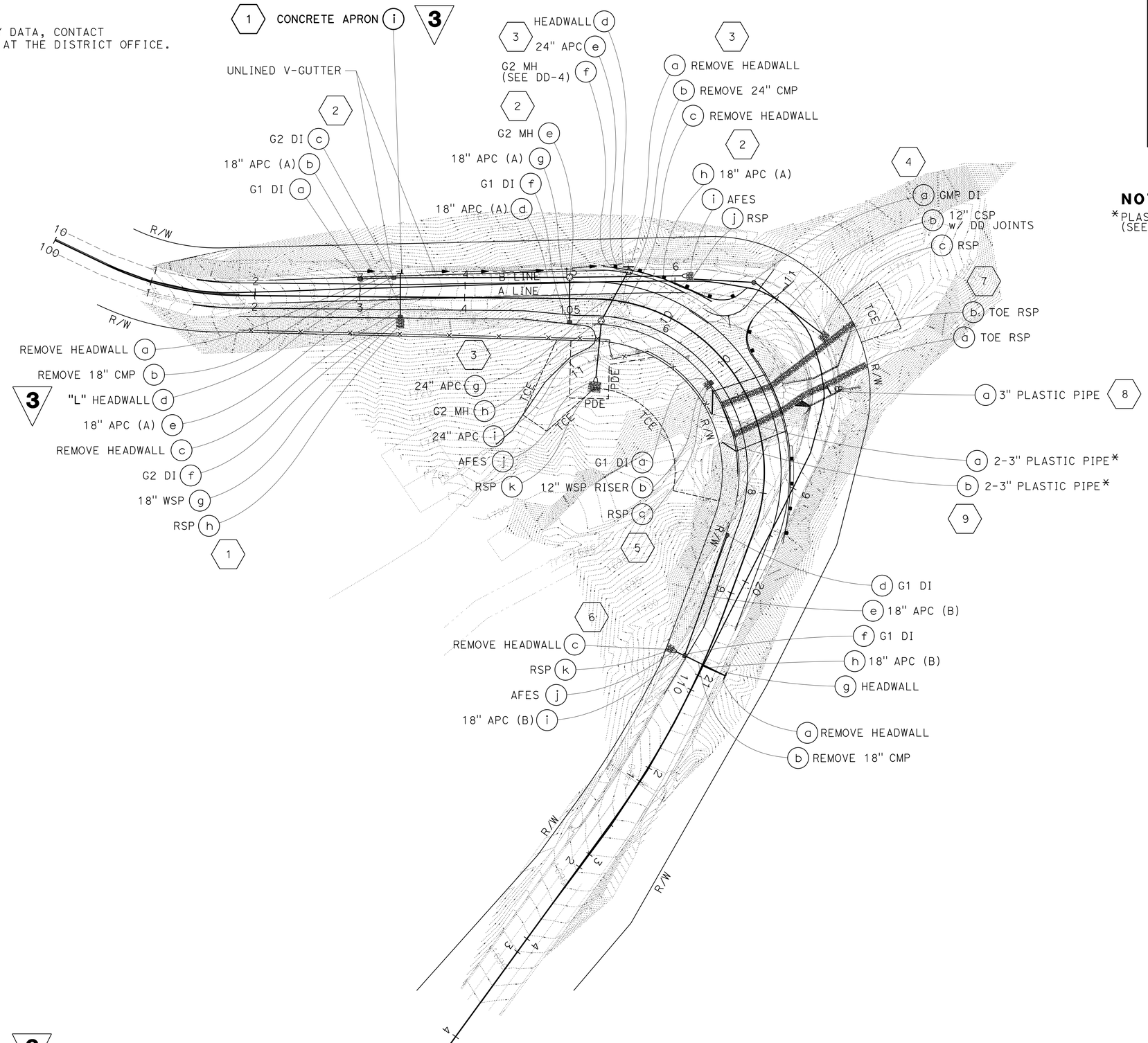

NOTE:

*PLASTIC PIPE CONNECT TO THE ABUTMENT DRAINS (SEE STRUCTURE PLANS)

3 **REPLACED PER ADDENDUM No. 3 DATED JANUARY 13, 2015**

APPROVED FOR DRAINAGE WORK ONLY

DRAINAGE PLAN

SCALE: 1" = 50'

D-1

STATE OF CALIFORNIA - DEPARTMENT OF TRANSPORTATION
Caltrans HYDRAULICS

FUNCTIONAL SUPERVISOR: KATHEEN REILLY

CALCULATED-DESIGNED BY: KHAI SHOON LEONG
CHECKED BY: KATHLEEN REILLY

REVISED BY: KSL
DATE REVISED: 4/24/14

LAST REVISION 06-19-14
DATE PLOTTED => 13-JAN-2015
TIME PLOTTED => 10:53

Dist	COUNTY	ROUTE	POST MILES TOTAL PROJECT	SHEET No.	TOTAL SHEETS
04	Nap	29	47.0/47.2	27	146

REGISTERED CIVIL ENGINEER DATE 4/24/14

6-23-14
PLANS APPROVAL DATE

REGISTERED PROFESSIONAL ENGINEER Khai Shoon Leong No. 76183 Exp. 6-30-14 CIVIL STATE OF CALIFORNIA

THE STATE OF CALIFORNIA OR ITS OFFICERS OR AGENTS SHALL NOT BE RESPONSIBLE FOR THE ACCURACY OR COMPLETENESS OF SCANNED COPIES OF THIS PLAN SHEET.

3

NOTE:
FOR DETAILS NOT SHOWN, SEE Std PLAN D89

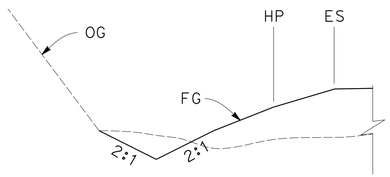

TYPICAL UNLINED V-GUTTER

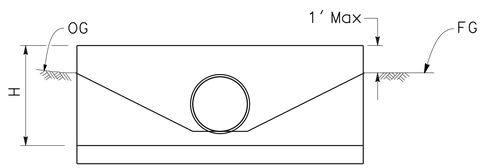

SECTION A-A

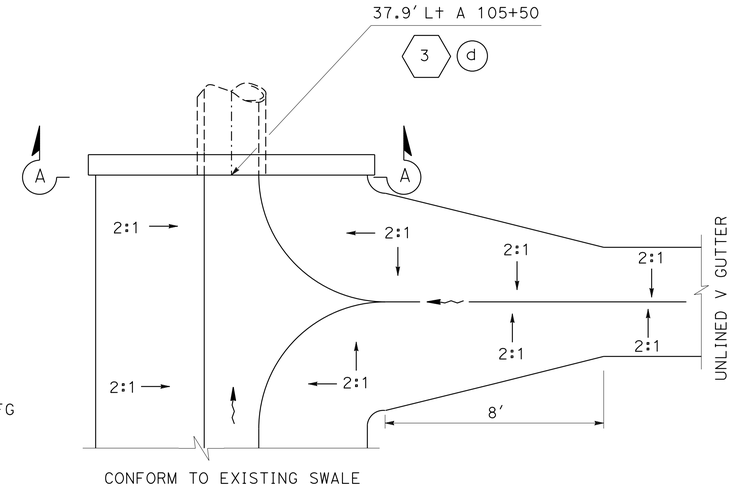

PLAN

HEADWALL DETAIL

3 d

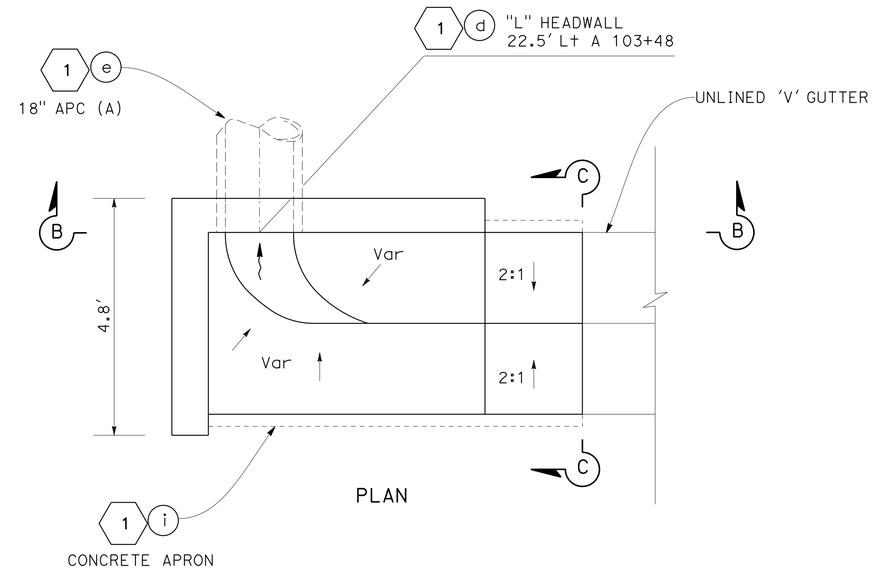

PLAN

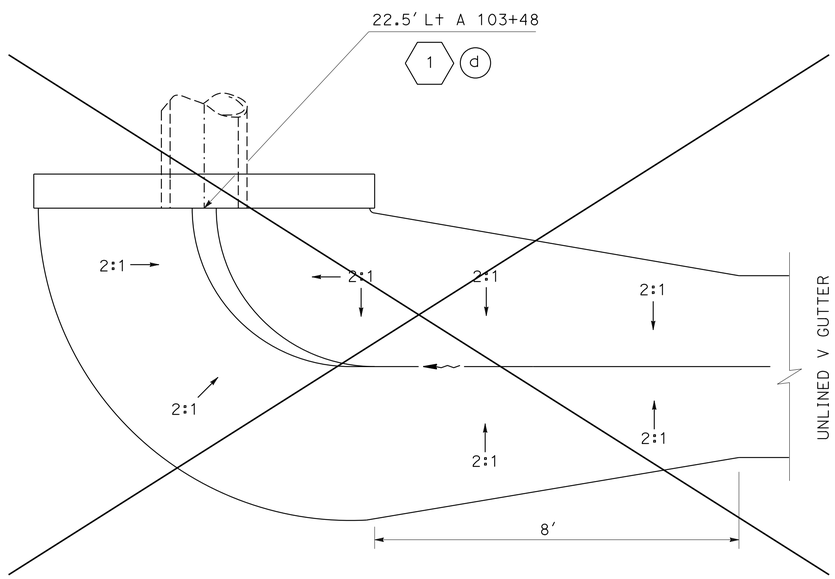

PLAN

HEADWALL DETAIL

1 d

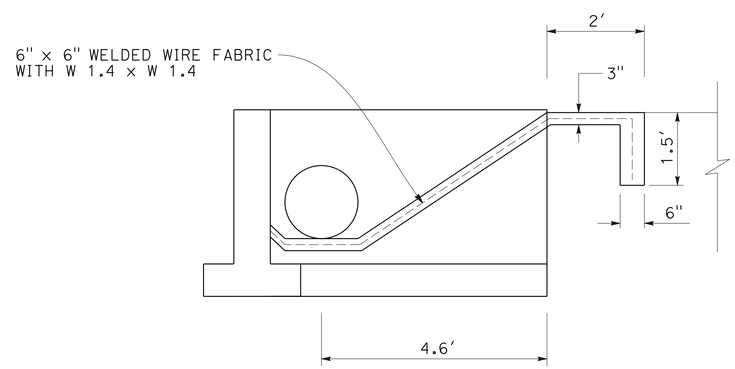

SECTION B-B

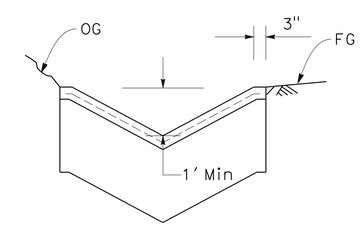

SECTION C-C

HEADWALL AND CONRETE APRON DETAIL

1 d i

3 **REPLACED PER ADDENDUM No. 3 DATED JANUARY 13, 2015**

DRAINAGE DETAILS

NO SCALE

DD-7

REVISED BY	DATE REVISED
KSL	4/24/14

CALCULATED-DESIGNED BY: KHAI SHOON LEONG
CHECKED BY: KATHLEEN REILLY
FUNCTIONAL SUPERVISOR: KATHEEN REILLY

STATE OF CALIFORNIA - DEPARTMENT OF TRANSPORTATION
Caltrans
HYDRAULICS

LAST REVISION 04-15-14
DATE PLOTTED => 13-JAN-2015
TIME PLOTTED => 10:53

Dist	COUNTY	ROUTE	POST MILES TOTAL PROJECT	SHEET No.	TOTAL SHEETS
04	Nap	29	47.0/47.2	30	146

REGISTERED CIVIL ENGINEER 4/24/14 DATE

6-23-14
PLANS APPROVAL DATE

REGISTERED PROFESSIONAL ENGINEER Jason R. Phoen No. 57553 Exp. 12-31-15 CIVIL STATE OF CALIFORNIA

THE STATE OF CALIFORNIA OR ITS OFFICERS OR AGENTS SHALL NOT BE RESPONSIBLE FOR THE ACCURACY OR COMPLETENESS OF SCANNED COPIES OF THIS PLAN SHEET.

3

APC ALLOWABLE MATERIAL AND PROTECTION

CULVERT DESIGNATION	RCP TYPE II MODIFIED CEMENT SIZE	PLASTIC PIPE SIZE	PLASTIC PIPE INTERIOR TYPE
18" APC (A)	18"	18"	SMOOTH OR CORRGATED
18" APC (B)	18"	18"	SMOOTH
24" APC	No	24"	CORRUGATED

DRAINAGE QUANTITIES

DRAINAGE SHEET No.	⬡ DRAINAGE SYSTEM No.	○ DRAINAGE UNIT	REMOVE CULVERT (LF)	REMOVE HEADWALL (EA)	MINOR CONCRETE (MINOR STRUCTURE) (CY)	MINOR CONCRETE (Misc CONSTRUCTION) (CY)	HEIGHT OF INLET (N) (LF)	RSP (2 TON, METHOD A, NATIVE COLOR)	RSP LIGHT, METHOD B (CY)	RSP FACING (CY)	ROCK SLOPE PROTECTION BACK No. 2 METHOD B (CY)	RSP FABRIC CLASS 8 (SQYD)	Misc IRON & STEEL (LB)	PLASTIC PIPE 3" (LF)	CORRUGATED METAL PIPE (GMP DI) 36" (LF)	CORRUGATED METAL PIPE 12" (LF)	ALTERNATIVE PIPE CULVERT (A) 18" (LF)	ALTERNATIVE PIPE CULVERT (B) 18" (LF)	ALTERNATIVE PIPE CULVERT 24" (LF)	WELDED STEEL PIPE 12" (LF)	WELDED STEEL PIPE 18" (LF)	ALTERNATIVE FLARED END SECTION 18" (EA)	ALTERNATIVE FLARED END SECTION 24" (EA)	Max COVER (N) (LF)	FRAME GATE & COVER (N) 24-12X (EA)	FRAME GATE & COVER (N) MH U45 (EA)	FRAME GATE & COVER (N) 36R (EA)	PIPE JOINT CLASSIFICATION (N)	DESCRIPTION	STATION	DRAINAGE SHEET No.	⬡ DRAINAGE SYSTEM No.	○ DRAINAGE UNIT
D-1	1	a		1																										REMOVE HEADWALL	23.9′ L+ A 103+23.7	D-1	1	a
		b	40																											REMOVE 18" CMP	23.9′ L+ A 103+23.7 TO 21.9′ R+ 103+39.73			b
		c		1																				2.0						REMOVE HEADWALL	21.9′ R+ A 103+39.73			c
		d			~~0.91~~ 1.25																									"L" HEADWALL	22.5′ L+ A 103+48			d
		e															42.5							2.8					S	18" APC (A)	22.5′ L+ A 103+48 TO 19.98′ R+ 103+48			e
		f			3.92		9.3						239												1					G2 DI	19.98′ R+ A 103+48			f
		g																			2.5									18" WSP	19.98′ R+ A 103+48 TO 22.5′ R+ 103+49			g
		h									2.1	12																		RSP	22.5′ R+ A 103+49			h
		i				**0.6**																								**CONCRETE APRON**	**22.5′ L+ A 103+48**			**i**
	2	a			1.06		3.5						239												1					G1 DI	18.26′ L+ 103+00		2	a
		b															34							2.0					S	18" APC (A)	18.26′ L+ 103+00 TO 18.26′ L+ 103+34			b
		c			1.89		5.3						239												1					G2 DI	18.26′ L+ 103+34			c
		d															166							3.8					S	18" APC (A)	18.26′ L+ A 103+34 TO 20.15′ L+ 105+00			d
		e			2.26		6.7						435													1				G2 MH	20.15′ L+ A 105+00			e
		f			1.06		3.5						239												1					G2 DI	23.48′ R+ A 105+00			f
		g															43.6							5.2						18" APC (A)	23.48′ R+ A 105+00 TO 20.15′ L+ 105+00			g
		h															98.2							5.2						18" APC (A)	20.15′ L+ A 105+00 TO 42.96′ L+ 105+95.5			h
		i																				1								AFES	42.96′ L+ A 105+95.5			i
		j									2.3	12																		RSP	42.96′ L+ A 105+95.5			j
	3	a		1																										REMOVE HEADWALL	18.1 L+ A 105+56.2		3	a
		b	6																											REMOVE 24" CMP (PORTION)	18.1 L+ A 105+56 TO 6.5′ L+ 105+54.3			b
		c		1																										REMOVE HEADWALL	37.9′ L+ A 105+50.6			c
		d			1.20																									HEADWALL	37.9′ L+ A 105+50.6			d
		e																	7.4					6.4					S	24" APC	37.9′ L+ A 105+50.6 TO 32′ L+ 105+50.8			e
		f			3.61		8.4						435													1				G2 MH	32′ L+ A 105+50.8			f
		g																	55.9					7.4					S	24" APC	32′ L+ A 105+50.8 TO 20.69′ R+ 105+31.5			g
		h			6.11		15.4						435													1				G2 MH	20.69′ R+ A 105+31.5			h
		i																	58.6					13.4					S	24" APC	20.69′ R+ A 105+31.5 TO 79.25′ R+ 105+28.6			i
		j																					1							AFES	79.25′ R+ 105+28.6			j
		k						30		8.9		25																		RSP	(CONFORM TO EXISTING SWALE)			k
	4	a			2.00		4.0						239		4.5												1			GMP	72.9′ L+ A 106+37.6		4	a
		b														78.8								3.0					DD	12" CMP w/ DD JOINT	72.9′ L+ A 106+37.6 TO 91.6′ L+ 106+91.3			b
		c									2.3	10																		RSP	91.6′ L+ A 106+91.3			c
	5	a			1.08		3.6						239												1					G1 DI	23.5′ R+ A 106+73.5		5	a
		b																		9				4.0						12" WSP RISER	23.6′ R+ A 106+73.5 TO 24.5′ R+ 106+73.5			b
		c									2.1	12																		RSP	24.5′ R+ A 106+73.5			c
SHEET TOTAL			46	4	~~25~~ 25.44	0.6		30		8.9	8.8	70	2739		4.5	78.8	384.3		122	9	3	1	1		5	3	1				SHEET TOTAL			

(N) - NOT A SEPARATE PAY ITEM, FOR INFORMATION ONLY

3 **REPLACED PER ADDENDUM No. 3 DATED JANUARY 13, 2015**

DRAINAGE QUANTITIES DQ-1

STATE OF CALIFORNIA - DEPARTMENT OF TRANSPORTATION
Caltrans® DESIGN

FUNCTIONAL SUPERVISOR: STEWART LEE
CALCULATED-DESIGNED BY: CLEMENT YEN
CHECKED BY: STEWART LEE
REVISED BY: CY
DATE REVISED: 4/24/14

LAST REVISION 04-15-14
DATE PLOTTED => 13-JAN-2015
TIME PLOTTED => 10:53

Dist	COUNTY	ROUTE	POST MILES TOTAL PROJECT	SHEET No.	TOTAL SHEETS
04	Nap	29	47.0/47.2	31	146

REGISTERED CIVIL ENGINEER 4/24/14 DATE

6-23-14
PLANS APPROVAL DATE

REGISTERED PROFESSIONAL ENGINEER Jason R. Phoen No. 57553 Exp. 12-31-15 CIVIL STATE OF CALIFORNIA

THE STATE OF CALIFORNIA OR ITS OFFICERS OR AGENTS SHALL NOT BE RESPONSIBLE FOR THE ACCURACY OR COMPLETENESS OF SCANNED COPIES OF THIS PLAN SHEET.

APC ALLOWABLE MATERIAL AND PROTECTION

CULVERT DESIGNATION	RCP TYPE II MODIFIED CEMENT SIZE	PLASTIC PIPE SIZE	PLASTIC PIPE INTERIOR TYPE
18" APC (A)	18"	18"	SMOOTH OR CORRGATED
18" APC (B)	18"	18"	SMOOTH
24" APC	No	24"	CORRUGATED

3

DRAINAGE QUANTITIES

DRAINAGE SHEET No.	DRAINAGE SYSTEM No. ⬡	DRAINAGE UNIT ○	REMOVE CULVERT (LF)	REMOVE HEADWALL (EA)	MINOR CONCRETE (MINOR STRUCTURE) (CY)	MINOR CONCRETE (Misc CONSTRUCTION) (CY)	HEIGHT OF INLET (N) (LF)	RSP (2 TON, METHOD A, NATIVE COLOR)	RSP LIGHT, METHOD B (CY)	RSP FACING (CY)	ROCK SLOPE PROTECTION BACK No. 2 METHOD B (CY)	RSP FABRIC CLASS 8 (SQYD)	Misc IRON & STEEL (LB)	PLASTIC PIPE 3" (LF)	CORRUGATED METAL PIPE (GMP DI) 36" (LF)	CORRUGATED METAL PIPE 12" (LF)	ALTERNATIVE PIPE CULVERT (A) 18" (LF)	ALTERNATIVE PIPE CULVERT (B) 18" (LF)	ALTERNATIVE PIPE CULVERT 24" (LF)	WELDED STEEL PIPE 12" (LF)	WELDED STEEL PIPE 18" (LF)	ALTERNATIVE FLARED END SECTION 18" (EA)	ALTERNATIVE FLARED END SECTION 24" (EA)	Min COVER (N) (LF)	FRAME GATE & COVER (N) 24-12X (EA)	FRAME GATE & COVER (N) MH U45 (EA)	FRAME GATE & COVER (N) 36R (EA)	PIPE JOINT CLASSIFICATION (N)	DESCRIPTION	STATION	DRAINAGE SHEET No.	DRAINAGE SYSTEM No. ⬡	DRAINAGE UNIT ○
D-2	6	a		1																										REMOVE HEADWALL	23.9′ L+ A 103+23.7	D-2	6	a
		b	55																											REMOVE 18" CMP	23.9′ L+ A 103+23.7 TO 21.9′ R+ 103+39.73			b
		c		1																										REMOVE HEADWALL	21.9′ R+ A 103+39.73			c
		d			1.06		3.5						239												1					G1 DI	23.89′ R+ A 108+50			d
		e																112.8						2				S	18" APC (B)	23.89′ R+ A 108+50 TO 20.58′ R+ 109+72.8			e
		f			1.19		4.1						239												1				G1 DI	20.58 R+ A 109+72.8			f
		g			0.91																								HEADWALL	23.55′ L+ A 109+74.5			g
		h																44.2						1				S	18" APC (B)	23.58′ L+ A 109+74.5 TO 20.58′ R+ 109+72.8			h
		i																11.2						3				S	18" APC (B)	20.58′ R+ A 109+72.8 TO 31.8′ R+ 109+72.73			i
		j																				1							AFES	31.8′ R+ 109+72.73			j
		k									2.3	10																	RSP	(CONFORM TO EXISTING SWALE)			k
	7	a							173.4			316																	RSP	122′ L+ A 106+90 TO 25.4′ R+ 107+00		7	a
		b							162.6			335															1		RSP	116′ L+ A 107+10 TO 25.2′ R+ 107+15			b
	8	a												12.5′															3" PLASTIC PIPE	60.0′ L+ 107+08 TO 59.1′ R+ 107+05		8	a
	9	a												46′															2-3" PLASTIC PIPE	(CONNECT TO ABUTMENT DRAIN) 37.2′ R+ 107+06		9	a
		b												34′															2-3" PLASTIC PIPE	(CONNECT TO ABUTMENT DRAIN) 37.19′ R+ 107.42.5			b
SHEET TOTAL			55	2	3				336		2.3	661	478	92.5′				178				1			2								
SHEET TOTAL DQ-1			46	4	25.44 ~~25~~			30		8.9	8.8	70	2739		4.5	79	384		122	9	3	1	1		5		3						
GRAND TOTAL			101	6	~~28~~ 28.44	0.6		30	336	8.9	11.1	731	3217	92.5	4.5	79	384	178	122	9	3	2	1		7		3		GRAND TOTAL				

(N) - NOT A SEPARATE PAY ITEM, FOR INFORMATION ONLY

3

3 **REPLACED PER ADDENDUM No. 3 DATED JANUARY 13, 2015**

DRAINAGE QUANTITIES DQ-2

STATE OF CALIFORNIA - DEPARTMENT OF TRANSPORTATION
Caltrans DESIGN
FUNCTIONAL SUPERVISOR STEWART LEE
CALCULATED-DESIGNED BY CLEMENT YEN
CHECKED BY STEWART LEE
REVISED BY CY
DATE REVISED 4/24/14

LAST REVISION 04-15-14 | DATE PLOTTED => 13-JAN-2015 | TIME PLOTTED => 10:53

Dist	COUNTY	ROUTE	POST MILES TOTAL PROJECT	SHEET No.	TOTAL SHEETS
04	Nap	29	47.0/47.2	41	146

REGISTERED CIVIL ENGINEER 4/24/14 DATE

6-23-14
PLANS APPROVAL DATE

REGISTERED PROFESSIONAL ENGINEER Jason R. Phoen No. 57553 Exp. 12-31-15 CIVIL STATE OF CALIFORNIA

THE STATE OF CALIFORNIA OR ITS OFFICERS OR AGENTS SHALL NOT BE RESPONSIBLE FOR THE ACCURACY OR COMPLETENESS OF SCANNED COPIES OF THIS PLAN SHEET.

3 REMOVE PAVEMENT DELINEATION

SHEET No.	STAGE No.	STATION	DETAIL No.	REMOVE TRAFFIC STRIPE ~~PAINT~~ 4" WHITE	REMOVE TRAFFIC STRIPE THERMO 4" YELLOW (HAZARDOUS WASTE)	REMOVE PAINTED TRAFFIC STRIPE 4" WHITE	REMOVE PAVEMENT MARKER TYPE D	REMOVE PAVEMENT MARKER TYPE G	REMOVE THERMO PAVEMENT MARKING ARROW	REMOVE PAINTED PAVEMENT MARKING STOP	REMOVE PAINTED PAVEMENT MARKING 12" WHITE
				LF			EA			SQFT	
TH-1	1	B 10+50 TO 16+80	27B	630							
		B 10+00 TO 22+42	22		2484		106				
		B 23+26 TO 35+13	9	1187				26			
		B 10+00 TO 16+00	27B	600							
		B 18+75 TO 21+00	27B	225							
		B 23+75							42		
		B 25+80							42		
		B 34+00							42		
TH-2	2	B 19+20 TO 21+15	27B	195							
		B 10+00 TO 11+80	27B			180					
		B 21+00 TO 22+42	27B			142					
		B 10+50 TO 16+80	27B			630					
TH-3	3	B 9+89 TO 10+60	27B			71					
		B 10+48 TO 16+00	27B			552					
TH-4	4	B 16+80 TO 19+20	27B	240							
		B 16+00 TO 18+75	27B	275							
		B 18+60 TO 21+00	27B			240					
		B 10+00 TO 10+80	27B			80					
		B 15+80 TO 17+44	27B			164					
		B 21+60 TO 23+26	27B			166					
		B 11+80 TO 16+80	27B			500					
		B 17+00 TO 18+80				180					
		B 21+83 TO 36+55				1472					
		B 10+00 TO	LIMIT LINE							22	12
		B 23+26 TO								22	12
		NORTHBOUND DRIVEWAY								22	12
		SOUTHBOUND DRIVEWAY								22	12
SUBTOTAL				3352	2484	4377	106	26	126	88	48
TOTAL				3352	2484	4377	132		126	136	

TEMPORARY TRAFFIC STRIPE AND PAVEMENT MARKING (PAINT)

SHEET No.	STAGE No.	STATION	DETAIL No.	Temp TRAFFIC STRIPE 4" WHITE	Temp PAVEMENT MARKING 12" WHITE	Temp PAVEMENT MARKING STOP
				LF	SQFT	
TH-1	1	B 10+00 TO 11+80	27B	180		
		B 21+00 TO 22+42		142		
		B 10+50 TO 16+80		630		
		B 21+83 TO 36+55		1472		
		B 10+00	LIMIT LINE		12	22
		B 23+26			12	22
		NORTHBOUND DRIVEWAY			12	22
		SOUTHBOUND DRIVEWAY			12	22
TH-2	2	B 9+89 TO 10+60	27B	71		
		B 17+00 TO 18+80		180		
		B 21+60 TO 23+26		166		
		B 10+48 TO 16+00		552		
		B 18+60 TO 21+00		240		
TH-3	3	B 10+00 TO 10+80	27B	80		
		B 15+80 TO 17+44		164		
		B 11+80 TO 16+80		500		
SUBTOTAL				4377	48	88
TOTAL				4377	136	

CHANNELIZERS (SURFACE MOUNTED)

SHEET No.	STAGE No.	STATION	DIRECTION	EA
TH-1	1	B 10+00 TO 12+00	NB	8
		B 21+00 TO 22+42		6
TH-2	2	B 9+89 TO 11+80	NB	8
		B 15+80 TO 16+80	SB/NB	5
		B 17+00 TO 18+80	NB	8
		B 21+00 TO 23+26		10
TH-3	3	B 10+00 TO 11+80	NB	8
		B 16+90 TO 17+10		2
TOTAL				55

3 REPLACED PER ADDENDUM No. 3 DATED JANUARY 13, 2015

TRAFFIC HANDLING QUANTITIES
THQ-2

REVISED BY	DATE REVISED
JRP	4/24/14

JASON R PHOEN — STEWART LEE

CALCULATED-DESIGNED BY — CHECKED BY

FUNCTIONAL SUPERVISOR: STEWART LEE

STATE OF CALIFORNIA - DEPARTMENT OF TRANSPORTATION — Caltrans — DESIGN

LAST REVISION 04-15-14 — DATE PLOTTED => 13-JAN-2015 — TIME PLOTTED => 10:53

Dist	COUNTY	ROUTE	POST MILES TOTAL PROJECT	SHEET No.	TOTAL SHEETS
04	Nap	29	47.0/47.2	43	146

REGISTERED CIVIL ENGINEER 4/24/14 DATE

6-23-14
PLANS APPROVAL DATE

REGISTERED PROFESSIONAL ENGINEER Jason R. Phoen No. 57553 Exp. 12-31-15 CIVIL STATE OF CALIFORNIA

THE STATE OF CALIFORNIA OR ITS OFFICERS OR AGENTS SHALL NOT BE RESPONSIBLE FOR THE ACCURACY OR COMPLETENESS OF SCANNED COPIES OF THIS PLAN SHEET.

3

TRAFFIC STRIPES, PAVEMENT MARKERS AND PAVEMENT MARKINGS

STATION	DIRECTION	DETAIL No.	PAVEMENT MARKER (RETROREFLECTIVE)		THERMOPLASTIC TRAFFIC STRIPE			DELINEATOR/ OBJECT MARKER		THERMOPLASTIC PAVEMENT MARKING ARROW (TYPE VI)
			TYPE D	TYPE G	4" WHITE BROKEN	4" WHITE SOLID	4" YELLOW SOLID	DELINEATOR (CLASS 1)	OBJECT MARKER (TYPE L-1)	
			EA		LF			EA		SQFT
A 100+00 TO 112+11	CENTER	22	104				2422			
A 100+00 TO 111+27	NB	27B				1127		10	2	
A 100+00 TO 112+11	SB	27B				1211		15	3	
A 112+11 TO 123+97	SB	9		26	1186					
A 112+60	SB									42
A 114+65	SB									42
A 122+85	SB									42
SUBTOTAL			104	26	1186	2338	2422	25	5	126
TOTAL			130		5946			25	5	126

3 REPLACED PER ADDENDUM No. 3 DATED JANUARY 13, 2015

PAVEMENT DELINEATION QUANTITIES

PDQ-1

STATE OF CALIFORNIA - DEPARTMENT OF TRANSPORTATION
Caltrans
TRAFFIC

FUNCTIONAL SUPERVISOR: STEWART LEE
CALCULATED-DESIGNED BY: JASON R PHOEN
CHECKED BY: STEWART LEE
REVISED BY: JRP
DATE REVISED: 4/24/14

LAST REVISION 04-10-14
DATE PLOTTED => 13-JAN-2015
TIME PLOTTED => 10:53

Dist	COUNTY	ROUTE	POST MILES TOTAL PROJECT	SHEET No.	TOTAL SHEETS
04	Nap	29	47.0/47.2	46	146

REGISTERED CIVIL ENGINEER 4/28/14 DATE

6-23-14
PLANS APPROVAL DATE

REGISTERED PROFESSIONAL ENGINEER Jerilyn L. Struven No. 49964 Exp. 12-31-14 CIVIL STATE OF CALIFORNIA

THE STATE OF CALIFORNIA OR ITS OFFICERS OR AGENTS SHALL NOT BE RESPONSIBLE FOR THE ACCURACY OR COMPLETENESS OF SCANNED COPIES OF THIS PLAN SHEET.

SIGN PANEL SUMMARY

SHEET No.	SIGN				SINGLE FACED	BACKGROUND		LEGEND		PROTECTIVE OVERLAY	FURNISHED SINGLE SHEET ALUMINUM (0.063") UNFRAMED	DESCRIPTION
	SIGN No.	SIGN CODE	PANEL SIZE	SQFT		SHEETING COLOR	RETRO-REFLECTED ASTM TYPE	SHEETING COLOR	RETRO-REFLECTED ASTM TYPE	PREMIUM	SQFT	
S-1	10	R4-3	36" x 48"	12.00	X	WHITE	III	BLACK		X	12.00	
	11	W1-5 (Rt)	36" x 36"	9.00	X	YELLOW	XIII	BLACK		X	9.00	
		W7-3a (6)	24" x 18"	3.00	X	YELLOW	XIII	BLACK		X	3.00	
	12	W1-2a (20)(Rt)	36" x 36"	9.00	X	YELLOW	XIII	BLACK		X	9.00	
	13	W4-22 (Lt)(20)(CA)	72" x 72"	36.00	X	YELLOW	XIII	BLACK		X	36.00	
	14	W1-1 (Lt)	36" x 36"	9.00	X	YELLOW	XIII	BLACK		X	9.00	
		W13-1 (20)	24" x 24"	4.00	X	YELLOW	XIII	BLACK		X	4.00	
	15	W8-5	36" x 36"	9.00	X	YELLOW	XIII	BLACK		X	9.00	
	16	R4-3	36" x 48"	12.00	X	WHITE	III	BLACK		X	12.00	
	17	G69	48" x 36"	12.00	X	GREEN	III	WHITE		X	12.00	
	18	W1-1 (Lt)	36" x 36"	9.00	X	YELLOW	XIII	BLACK		X	9.00	
		W13-1 (20)	24" x 24"	4.00	X	YELLOW	XIII	BLACK		X	4.00	
TOTAL				~~128.00~~							128.00	

3

3 REPLACED PER ADDENDUM No. 3 DATED JANUARY 13, 2015

SIGN QUANTITIES

SQ-2

STATE OF CALIFORNIA - DEPARTMENT OF TRANSPORTATION
Caltrans
TRAFFIC

FUNCTIONAL SUPERVISOR: ROLAND AU-YEUNG
CALCULATED-DESIGNED BY: STEPHEN LAU
CHECKED BY: JERILYN STRUVEN
REVISED BY: SL
DATE REVISED: 4/24/14

LAST REVISION 03-14-14
DATE PLOTTED => 13-JAN-2015
TIME PLOTTED => 10:53

Dist	COUNTY	ROUTE	POST MILES TOTAL PROJECT	SHEET No.	TOTAL SHEETS
04	Nap	29	47.0/47.2	50	146

LICENSED LANDSCAPE ARCHITECT

6-23-14
PLANS APPROVAL DATE

LICENSED LANDSCAPE ARCHITECT
Name & License No.
Signature
3-31-15
Renewal Date
4-24-14
Date
STATE OF CALIFORNIA

THE STATE OF CALIFORNIA OR ITS OFFICERS OR AGENTS SHALL NOT BE RESPONSIBLE FOR THE ACCURACY OR COMPLETENESS OF SCANNED COPIES OF THIS PLAN SHEET.

SUBTOTALS PER VALVE ON LATERAL SUPPLY SIDE OF CONTROL VALVE

DESCRIPTION		UNIT	VALVE OR ASSEMBLY NUMBER A1	A2	SUBTOTALS	UNIT	DESCRIPTION	
PLASTIC PIPE SUPPLY LINE SCHEDULE 40 UVR	3/4 INCH	LF	700	190	890	LF	3/4 INCH	SCHEDULE 40 UVR PLASTIC PIPE SUPPLY LINE
	1 INCH	LF	210		210	LF	1 INCH	
	1-1/4 INCH	LF	60		60	LF	1 1/4 INCH	
WSP CONDUIT	4 INCH	LF	90		90	LF	4 INCH	WSP CONDUIT
DIP								DIP
SPRINKLER ASSEMBLY TYPE	RISER V	EA	34	9	43	EA	RISER V	SPRINKLER ASSEMBLY TYPE

IRRIGATION CONDUIT

SHEET No.	IRRIGATION CONDUIT No.	LOCATION LINE	LOCATION STATION	SIDE L†	SIDE R†	EXTENSION CONNECTION TYPE CB	EXTENSION CONNECTION TYPE OL	(N) WATER SUPPLY LINE SIZE (INCH)	(N) SPRINKLER CONTROL CONDUIT SIZE (INCH)	WELDED STEEL PIPE 4" LENGTH (LF)	WELDED STEEL PIPE XX" LENGTH (LF)	WELDED STEEL PIPE XX" LENGTH (LF)
IP-1	1	A-LINE	106+50	X	-	-	-	1-1/2	-	30	-	-
IP-1	2	A-LINE	107+00	X	X	-	-	1	-	60	-	-
									SUBTOTAL	90	-	-
									TOTAL	90	-	-

ABBREVIATIONS:
CB - COUPLING BAND
OL - OVERLAP

ABBREVIATION:
UVR - ULTRAVIOLET RESISTANT

3 (N) - ~~NOT A SEPARATE PAY ITEM, FOR INFORMATION ONLY~~ (N) - NOT A SEPARATE PAY ITEM, FOR INFORMATION ONLY
X - DENOTES REQUIREMENT

3 **REPLACED PER ADDENDUM No. 3 DATED JANUARY 13, 2015**

IRRIGATION QUANTITIES

IQ-1

STATE OF CALIFORNIA - DEPARTMENT OF TRANSPORTATION
Caltrans
LANDSCAPE ARCHITECTURE
SENIOR LANDSCAPE ARCHITECT SUSAN LINDSAY
CALCULATED-DESIGNED BY SUSAN LINDSAY
CHECKED BY MARTIN HOGAN
REVISED BY MH
DATE REVISED 4/24/14

LAST REVISION 00-00-00
DATE PLOTTED => 13-JAN-2015
TIME PLOTTED => 10:53

Dist	COUNTY	ROUTE	POST MILES TOTAL PROJECT	SHEET No.	TOTAL SHEETS
04	Nap	29	47.0/47.2	51	146

LICENSED LANDSCAPE ARCHITECT

PLANS APPROVAL DATE

LICENSED LANDSCAPE ARCHITECT MARTIN A. HOGAN No. 4854 Signature 3-31-15 Renewal Date 4-24-14 Date STATE OF CALIFORNIA

THE STATE OF CALIFORNIA OR ITS OFFICERS OR AGENTS SHALL NOT BE RESPONSIBLE FOR THE ACCURACY OR COMPLETENESS OF SCANNED COPIES OF THIS PLAN SHEET.

SUBTOTALS PER PLAN SHEET ON MAIN SUPPLY SIDE OF CONTROL VALVE

DESCRIPTION			UNIT	SHEET NUMBER IP-1	SUBTOTALS
BPA		ENCLOSURE			
BOOSTER PUMP					
IRRIGATION CONTROLLER		STATION			
		STATION			
		STATION			
	CEC	SINGLE			
		DOUBLE			
VALVES AND ASSEMBLIES	BV	1 INCH	EA	1	1
		1-½ INCH	EA	1	1
	WSA	1 INCH	EA	1	1
		1-½ INCH	EA	1	1
	CCA	1 INCH	EA	1	1
		1-½ INCH	EA	1	1
CONDUIT	CSP				
	WSP	4 INCH	LF	-	-
PLASTIC PIPE SUPPLY LINE	SCH 40	¾ INCH	LF	-	-
		1 INCH	LF	-	-
		1-1/4 INCH	LF	-	-
		1-1/2 INCH	LF	10	10
	UVR				
	PR 315				
DIP	GSP	3 INCH	LF	20	
	DIP				

3 REPLACED PER ADDENDUM No. 3 DATED JANUARY 13, 2015

TOTAL QUANTITIES

TOTALS	UNIT	DESCRIPTION		
		ENCLOSURE		BPA
		BOOSTER PUMP		
		STATION		IRRIGATION CONTROLLER
		STATION		
		STATION		
		SINGLE	CEC	
		DOUBLE		
1	EA	1 INCH	BV	VALVES AND ASSEMBLIES
1	EA	1-½ INCH		
1	EA	1 INCH	WSA	
1	EA	1-½ INCH		
1	EA	1 INCH	CCA	
1	EA	1-½ INCH		
			CSP	CONDUIT
90	LF	4 INCH	WSP	
890	LF	¾ INCH	SCH 40	PLASTIC PIPE SUPPLY LINE
210	LF	1 INCH		
60	LF	1-1/4" INCH		
10	LF	1-1/2" INCH		
			UVR	
			PR 315	
20	LF	3 INCH	GSP	
			DIP	
43	EA	RIVER V		SPRINKLER ASSEMBLY TYPE

IRRIGATION QUANTITIES

IQ-2

STATE OF CALIFORNIA - DEPARTMENT OF TRANSPORTATION

Caltrans® LANDSCAPE ARCHITECTURE

SENIOR LANDSCAPE ARCHITECT: SUSAN LINDSAY

CALCULATED-DESIGNED BY: MARTY HOGAN — CHECKED BY: SUSAN LINDSAY

REVISED BY: MH — DATE REVISED: 4/24/14

LAST REVISION 00-00-00 — DATE PLOTTED => 13-JAN-2015 — TIME PLOTTED => 10:53

M

Maint	MAINTENANCE
Max	MAXIMUM
MB	METAL BEAM
MBB	METAL BEAM BARRIER
MBGR	METAL BEAM GUARD RAILING
Med	MEDIAN
MGS	MIDWEST GUARDRAIL SYSTEM
MH	MANHOLE
Min	MINIMUM
Misc	MISCELLANEOUS
Misc I & S	MISCELLANEOUS IRON AND STEEL
Mkr	MARKER
Mod	MODIFIED,
	MODIFY
Mon	MONUMENT
MP	METAL PLATE
MPGR	METAL PLATE GUARD RAILING
MR	MOVEMENT RATING
MSE	MECHANICALLY STABILIZED EMBANKMENT
Mt	MOUNTAIN, MOUNT
Mtl	MATERIAL
MVP	MAINTENANCE VEHICLE PULLOUT

N

N	NORTH
NB	NORTHBOUND
No.	NUMBER (MUST HAVE PERIOD)
Nos.	NUMBERS (MUST HAVE PERIOD)
NPS	NOMINAL PIPE SIZE
NS	NEAR SIDE
NSP	NEW STANDARD PLAN
NTS	NOT TO SCALE

O

Oblr	OBLITERATE
OC	OVERCROSSING
OD	OUTSIDE DIAMETER
OF	OUTSIDE FACE
OG	ORIGINAL GROUND
OGAC	OPEN GRADED ASPHALT CONCRETE
OGFC	OPEN GRADED FRICTION COURSE
OH	OVERHEAD
OHWM	ORDINARY HIGH WATER MARK
O-O	OUT TO OUT
Opp	OPPOSITE
OSD	OVERSIDE DRAIN

P

p	PAGE
PAP	PERFORATED ALUMINUM PIPE
PB	PULL BOX
PC	POINT OF CURVATURE,
	PRECAST
PCC	POINT OF COMPOUND CURVE,
	PORTLAND CEMENT CONCRETE
PCMS	PORTABLE CHANGEABLE MESSAGE SIGN
PCP	PERFORATED CONCRETE PIPE,
	PRESTRESSED CONCRETE PIPE
PCVC	POINT OF COMPOUND VERTICAL CURVE
PEC	PERMIT TO ENTER AND CONSTRUCT
Ped	PEDESTRIAN
Ped OC	PEDESTRIAN OVERCROSSING
Ped UC	PEDESTRIAN UNDERCROSSING
Perm Mtl	PERMEABLE MATERIAL

P continued

PG	PROFILE GRADE
PI	POINT OF INTERSECTION
PJP	PARTIAL JOINT PENETRATION
Pkwy	PARKWAY
ℙ,PL	PLATE
P/L	PROPERTY LINE
PM	POST MILE,
	TIME FROM NOON TO MIDNIGHT
PN	PAVING NOTCH
POC	POINT OF HORIZONTAL CURVE
POT	POINT OF TANGENT
POVC	POINT OF VERTICAL CURVE
PP	PIPE PILE,
	PLASTIC PIPE,
	POWER POLE
PPL	PREFORMED PERMEABLE LINER
PPP	PERFORATED PLASTIC PIPE
PRC	POINT OF REVERSE CURVE
PRF	PAVEMENT REINFORCING FABRIC
PRVC	POINT OF REVERSE VERTICAL CURVE
PS&E	PLANS, SPECIFICATIONS AND ESTIMATES
PS, P/S	PRESTRESSED
PSP	PERFORATED STEEL PIPE
PT	POINT OF TANGENCY
PVC	POLYVINYL CHLORIDE
Pvmt	PAVEMENT

Q

Qty	QUANTITY

R

R	RADIUS
R & D	REMOVE AND DISPOSE
R & S	REMOVE AND SALVAGE
R/C	RATE OF CHANGE
RCA	REINFORCED CONCRETE ARCH
RCB	REINFORCED CONCRETE BOX
RCP	REINFORCED CONCRETE PIPE
RCPA	REINFORCED CONCRETE PIPE ARCH
Rd	ROAD
Reinf	REINFORCED,
	REINFORCEMENT,
	REINFORCING
Rel	RELOCATE
Repl	REPLACEMENT
Ret	RETAINING
Rev	REVISED, REVISION
Rdwy	ROADWAY
RHMA	RUBBERIZED HOT MIX ASPHALT
Riv	RIVER
RM	ROAD-MIXED
RP	RADIUS POINT,
	REFERENCE POINT
RR	RAILROAD
RSP	ROCK SLOPE PROTECTION,
	REVISED STANDARD PLAN
Rt	RIGHT
Rte	ROUTE
RW	REDWOOD,
	RETAINING WALL
R/W	RIGHT OF WAY
Rwy	RAILWAY

S

S	SOUTH,
	SUPPLEMENT
SAE	STRUCTURE APPROACH EMBANKMENT
Salv	SALVAGE
SAPP	STRUCTURAL ALUMINUM PLATE PIPE
SB	SOUTHBOUND
SC	SAND CUSHION
SCSP	SLOTTED CORRUGATED STEEL PIPE
SD	STORM DRAIN
Sec	SECOND,
	SECTION
Sep	SEPARATION
SG	SUBGRADE
Shld	SHOULDER
Sht	SHEET
Sim	SIMILAR
℄	STATION LINE
SM	SELECTED MATERIAL
Spec	SPECIAL,
	SPECIFICATIONS
SPP	SLOTTED PLASTIC PIPE
SS	SLOPE STAKE
SSBM	STRAP AND SADDLE BRACKET METHOD
SSD	STRUCTURAL SECTION DRAIN
SSPA	STRUCTURAL STEEL PLATE ARCH
SSPP	STRUCTURAL STEEL PLATE PIPE
SSPPA	STRUCTURAL STEEL PLATE PIPE ARCH
SSRP	STEEL SPIRAL RIB PIPE
St	STREET
Sta	STATION
STBB	SINGLE THRIE BEAM BARRIER
Std	STANDARD
Str	STRUCTURE
Surf	SURFACING
SW	SIDEWALK,
	SOUND WALL
Swr	SEWER
Sym	SYMMETRICAL
S4S	SURFACE 4 SIDES

T

T	SEMI-TANGENT
Tan	TANGENT
TBB	THRIE BEAM BARRIER
Tbr	TIMBER
TC	TOP OF CURB
TCB	TRAFFIC CONTROL BOX
TCE	TEMPORARY CONSTRUCTION EASEMENT
Tel	TELEPHONE
Temp	TEMPORARY
TG	TOP OF GRADE
Tot	TOTAL
TP	TELEPHONE POLE
TPB	TREATED PERMEABLE BASE
TPM	TREATED PERMEABLE MATERIAL
Trans	TRANSITION

T continued

TS	TRANSVERSE,
	TRAFFIC SIGNAL,
	TUBULAR STEEL
Typ	TYPICAL

U

UC	UNDERCROSSING
UD	UNDERDRAIN
UG	UNDERGROUND
UON	UNLESS OTHERWISE NOTED
UP	UNDERPASS

V

V	VALVE,
	DESIGN SPEED
Var	VARIABLE,
	VARIES
VC	VERTICAL CURVE
VCP	VITRIFIED CLAY PIPE
Vert	VERTICAL
Via	VIADUCT
Vol	VOLUME

W

W	WEST,
	WIDTH
WB	WESTBOUND
WH	WEEP HOLE
WM	WIRE MESH
WS	WATER SURFACE
WSP	WELDED STEEL PIPE
Wt	WEIGHT
WV	WATER VALVE
WW	WINGWALL
WWLOL	WINGWALL LAYOUT LINE

X

X Sec	CROSS SECTION
Xing	CROSSING

Y

Yr	YEAR
Yrs	YEARS

3 ADDED PER ADDENDUM No. 3 DATED JANUARY 13, 2015

Dist	COUNTY	ROUTE	POST MILES TOTAL PROJECT	SHEET No.	TOTAL SHEETS
04	Nap	29	47.0/47.2	64a	146

3

Grace M. Tsushima
REGISTERED CIVIL ENGINEER

July 19, 2013
PLANS APPROVAL DATE

REGISTERED PROFESSIONAL ENGINEER Grace M. Tsushima No. C49814 Exp. 9-30-14 CIVIL STATE OF CALIFORNIA

THE STATE OF CALIFORNIA OR ITS OFFICERS OR AGENTS SHALL NOT BE RESPONSIBLE FOR THE ACCURACY OR COMPLETENESS OF SCANNED COPIES OF THIS PLAN SHEET.

TO ACCOMPANY PLANS DATED 6-23-14

UNIT OF MEASUREMENT SYMBOLS:

Some of the symbols used in the project plan quantity tables and in the Bid Item List are:

TABLE A

SYMBOL USED	DEFINITIONS
ACRE	ACRE
CF	CUBIC FOOT
CY	CUBIC YARD
EA	EACH
GAL	GALLON
LB	POUND
LF	LINEAR FOOT
SQFT	SQUARE FOOT
SQYD	SQUARE YARD
STA	100 FEET
TAB	TABLET
TON	2,000 POUNDS

Some of the symbols used in the plans other than in the project plan quantity tables are:

TABLE B

SYMBOL USED	DEFINITIONS
ksi	KIPS PER SQUARE INCH
ksf	KIPS PER SQUARE FOOT
psi	POUNDS PER SQUARE INCH
psf	POUNDS PER SQUARE FOOT
lb/ft^3, pcf	POUNDS PER CUBIC FOOT
tsf	TONS PER SQUARE FOOT
mph, MPH *	MILES PER HOUR
ø	NOMINAL DIAMETER
oz	OUNCE
lb	POUND
kip	1,000 POUNDS
cal	CALORIE
ft	FOOT OR FEET
gal	GALLON

* For use on a sign panel only

STATE OF CALIFORNIA
DEPARTMENT OF TRANSPORTATION

ABBREVIATIONS (SHEET 2 OF 2)

NO SCALE

RSP A10B DATED JULY 19, 2013 SUPERSEDES STANDARD PLAN A10B DATED MAY 20, 2011 - PAGE 2 OF THE STANDARD PLANS BOOK DATED 2010.

REVISED STANDARD PLAN RSP A10B

2010 REVISED STANDARD PLAN RSP A10B

6-7-13

Dist	COUNTY	ROUTE	POST MILES TOTAL PROJECT	SHEET No.	TOTAL SHEETS
04	Nap	29	47.0/47.2	80a	146

Raymond Don Tsztoo
REGISTERED CIVIL ENGINEER

April 19, 2013
PLANS APPROVAL DATE

REGISTERED PROFESSIONAL ENGINEER Raymond Don Tsztoo No. C37332 Exp. 6-30-14 CIVIL STATE OF CALIFORNIA

THE STATE OF CALIFORNIA OR ITS OFFICERS OR AGENTS SHALL NOT BE RESPONSIBLE FOR THE ACCURACY OR COMPLETENESS OF SCANNED COPIES OF THIS PLAN SHEET.

3

TO ACCOMPANY PLANS DATED 6-23-14

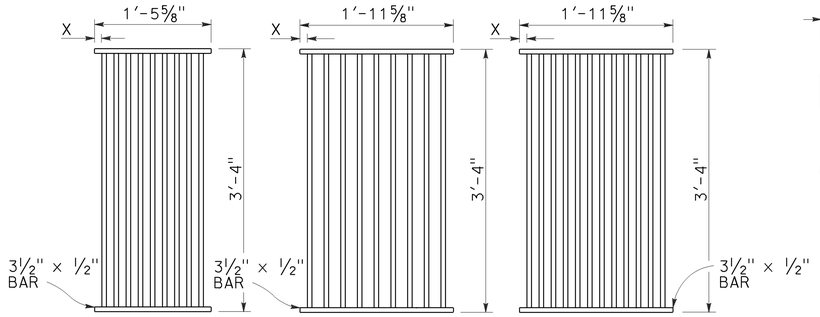

TYPE 18-9

1⅜" Clear spacing. Use within the roadbed on highways where bicycles and pedestrians are excluded.

TYPE 24-9

2" Clear spacing. Use in locations off the roadbed on all types of highways.

TYPE 24-12

1⅜" Clear spacing. Use within the roadbed on highways where bicycles and pedestrians are excluded.

RECTANGULAR GRATE DETAILS

(See table below)

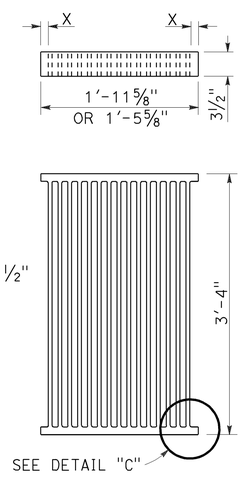

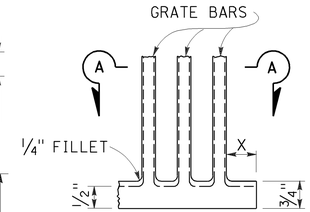

DETAIL "C"

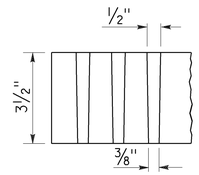

SECTION A-A

ALTERNATIVE CAST DUCTILE IRON GRATE OR CAST CARBON STEEL GRATE

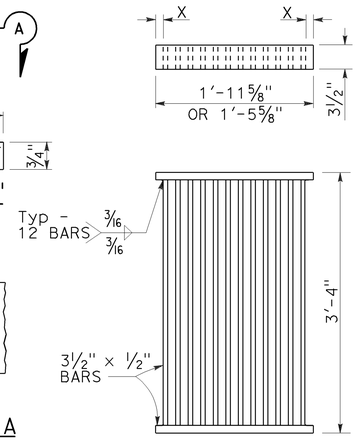

ALTERNATIVE WELDED GRATE

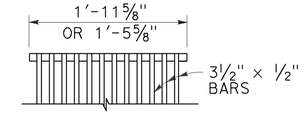

CAST END BLOCK

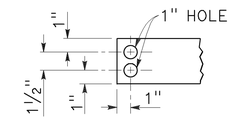

END OF BAR

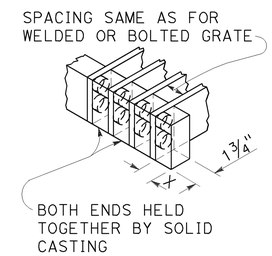

ALTERNATIVE CAST DUCTILE IRON OR CAST CARBON STEEL END BLOCK GRATE

NOTES:

1. Grate type numbers refer to approximate width of grate in inches and number of bars, respectively.
2. Contractor has the option of using cast ductile iron, cast carbon steel, welded, bolted, or cast end block grate.
3. Rounded top of bars optional on all grates.
4. Pipe inlets with a grate shall be placed so that bars parallel direction of principle surface flow.
5. Complete joint penetration butt welds may be substituted for the fillet welds on all anchors.
6. Standard square, hexagon, round or equivalent headed anchors may be substituted for the right angle hooks on the anchors shown on this plan.
7. Grate and frame weights are based on welded grates (weights of face angles, steps, protection bars, etc. are not included).
8. Connect chain to grate and frame only at locations shown on the plans. When chain is required, do not use cast ductile iron grates.

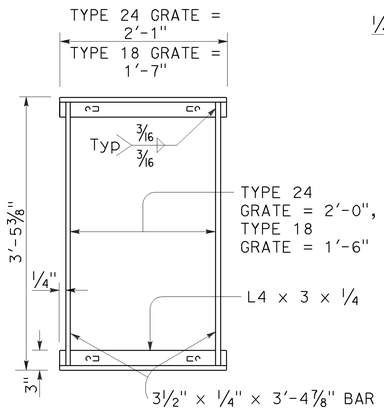

TYPICAL FRAME

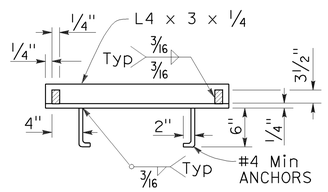

CROSS SECTION

(Thru frame)

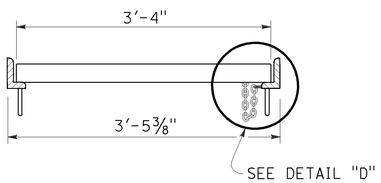

LONGITUDINAL SECTION

(Thru frame and grate)

RECTANGULAR FRAME DETAILS

(For all rectangular grates)

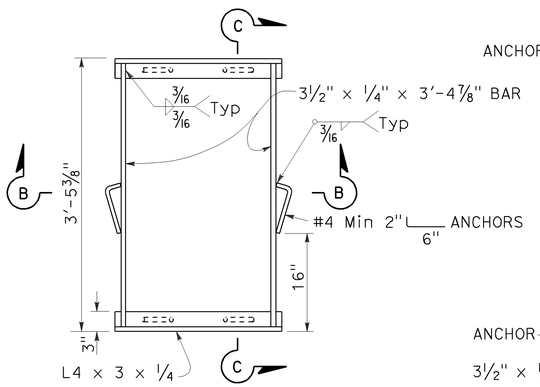

TYPICAL FRAME

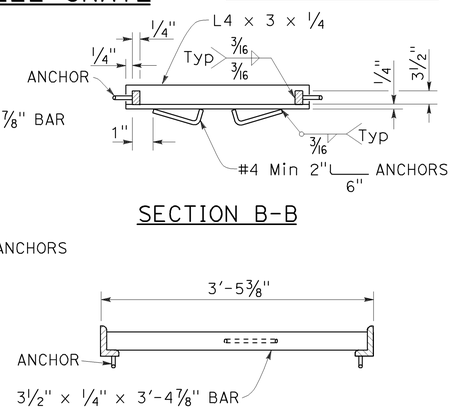

SECTION B-B

SECTION C-C

ALTERNATIVE ANCHOR FOR RECTANGULAR FRAME

(For details not shown, See Rectangular Frame Details)

3 ADDED PER ADDENDUM No. 3 DATED JANUARY 13, 2015

GRATE BAR SPACING TABLE

TYPE	No. OF BARS	CLEAR BAR SPACING	X
18-9	9	1⅜"	1 1/16"
24-9	9	2"	1 9/16"
24-12	12	1⅜"	1¼"

INLET TYPE	COVER TYPE	WEIGHT LB
OS	PLATE	174
OL-7	PLATE	170
OL-10	PLATE	170
OL-14	PLATE	170
OL-21	PLATE	170
OCP	PLATE	112
OCPI	PLATE	112
OCPI	REDWOOD	42
OMP	PLATE	177
OMPI	PLATE	177

INLET TYPE	GRATE TYPE	No. OF GRATES	WEIGHT LB
GDO	24-12	2	634
GOL-7	24-12	1	326
GOL-10	24-12	1	326
GO,G1,G2,G3,G4 (TYPE 24)	24-9	1	263
	24-12	1	326
G4 (TYPE 18),G5,G6	18-9	1	249
GT1	18-9	2	498
GT2	18-9	2	498
GT3	24-12	2	652
GT4	24-12	2	652
TRASH RACK			22
GRATE CHAIN			3

BASIS FOR Misc IRON & STEEL FINAL PAY WEIGHTS FOR DRAINAGE INLETS

(See Note 7)

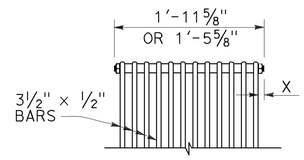

BOLTED END BLOCK

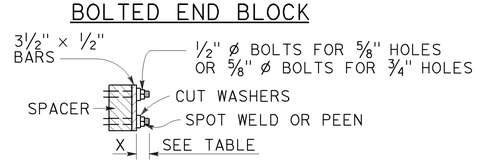

BOLTING DETAIL

ALTERNATIVE BOLTED GRATE

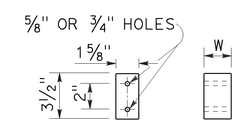

BAR SPACER

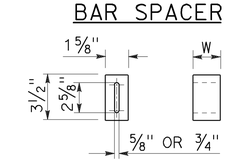

ALTERNATIVE SPACER

W = 1⅜" or 2"

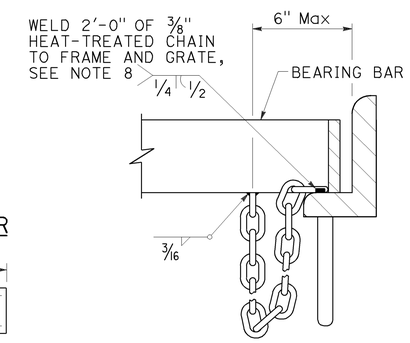

DETAIL "D"

(Steel grates only)

STATE OF CALIFORNIA
DEPARTMENT OF TRANSPORTATION

GRATE DETAILS No. 1

NO SCALE

RSP D77A DATED APRIL 19, 2013 SUPERSEDES RSP D77A DATED JULY 20, 2012 AND STANDARD PLAN D77A DATED MAY 20, 2011 - PAGE 164 OF THE STANDARD PLANS BOOK DATED 2010.

REVISED STANDARD PLAN RSP D77A

2010 REVISED STANDARD PLAN RSP D77A

4-4-13

DIST	COUNTY	ROUTE	POST MILES TOTAL PROJECT	SHEET No.	TOTAL SHEETS
04	Nap	29	47.0/47.2	100	146

Mary K Beall 5/28/14
REGISTERED CIVIL ENGINEER DATE

June 23, 2014
PLANS APPROVAL DATE

REGISTERED PROFESSIONAL ENGINEER MARY K. BEALL No. C76357 Exp. 12/31/14 CIVIL STATE OF CALIFORNIA

The State of California or its officers or agents shall not be responsible for the accuracy or completeness of scanned copies of this plan sheet.

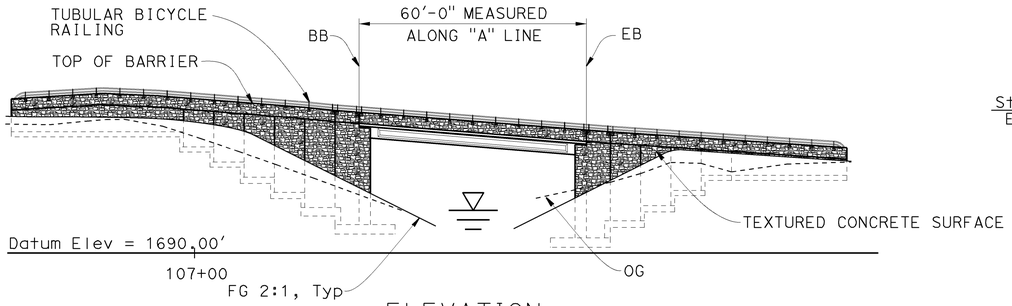

ELEVATION
1"=20'-0"

PROFILE GRADE
NO SCALE

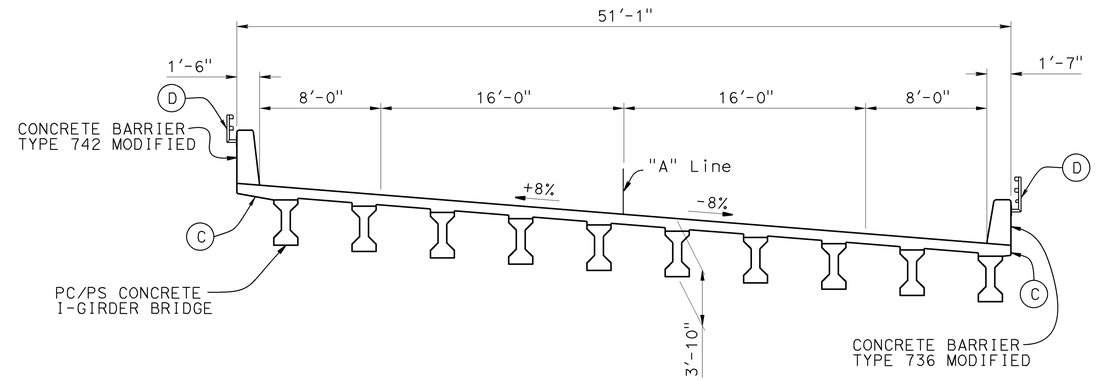

TYPICAL SECTION
1"= 5'-0"

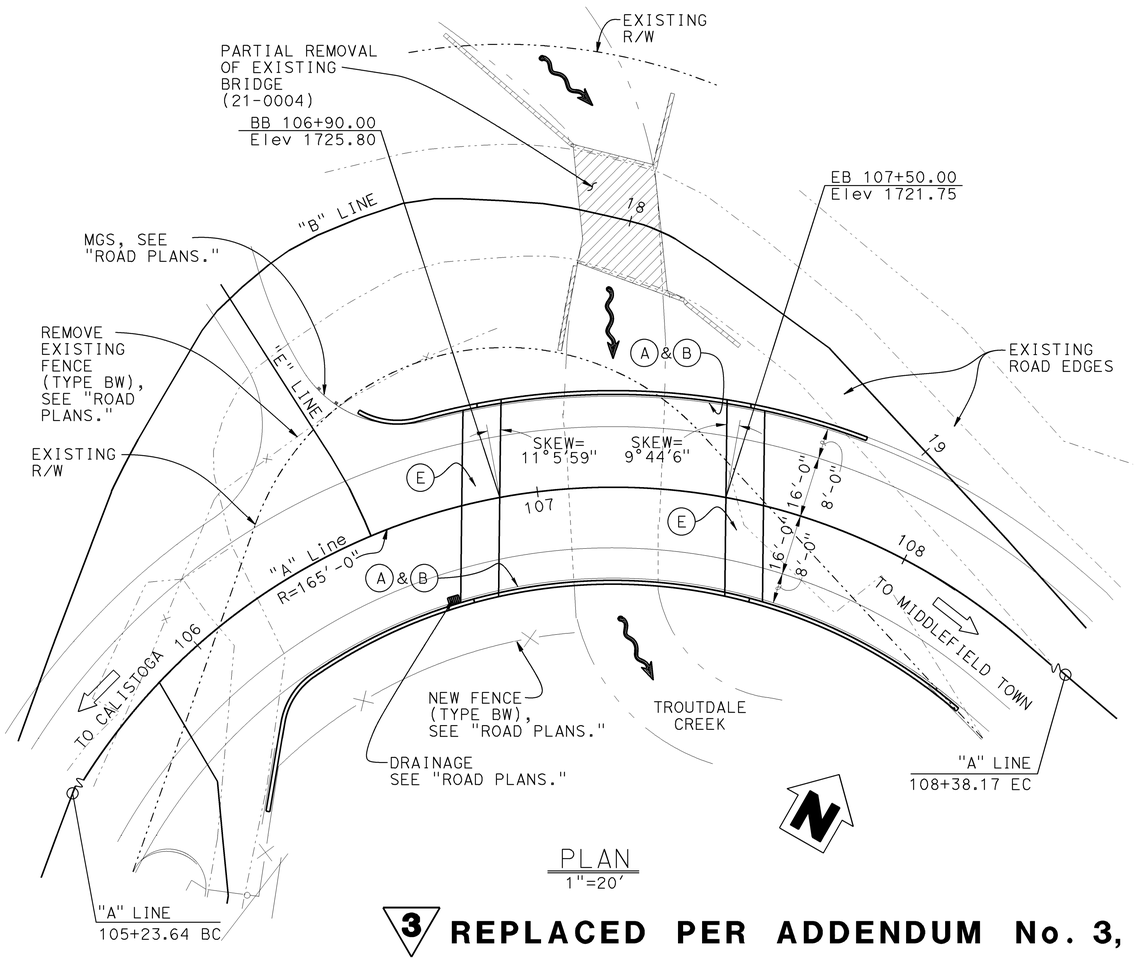

PLAN
1"=20'

NOTES:

(A) Paint "Br. No. 21-0113"
(B) Paint "TROUTDALE CREEK BRIDGE"
(C) Overhang width varies along the bridge.
(D) Tubular bicycle railing
(E) Structure Approach Type EQ(10)

LEGEND:

Indicates existing structure to be removed (portion)

QUANTITIES

WORK AREA MONITORING (BRIDGE)	LUMP	SUM
BRIDGE REMOVAL (PORTION)	LUMP	SUM
STRUCTURE EXCAVATION (BRIDGE)	1,200	CY
STRUCTURE EXCAVATION (RETAINING WALL)	2,388	CY
STRUCTURE BACKFILL (BRIDGE)	1,145	CY
STRUCTURE BACKFILL (RETAINING WALL)	2,435	CY
STRUCTURAL CONCRETE, BRIDGE FOOTING	229	CY
STRUCTURAL CONCRETE, BRIDGE	469	CY
STRUCTURAL CONCRETE, RETAINING WALL	298	CY
STRUCTURAL CONCRETE, APPROACH SLAB (TYPE EQ)	27	CY
MINOR CONCRETE	6	CY
ASHLAR STONE TEXTURE (3)	3,610	SQFT
FURNISH PRECAST PRESTRESSED CONCRETE GIRDER (50'-60')	10	EA
ERECT PRECAST PRESTRESSED CONCRETE GIRDER	10	EA
JOINT SEAL (MR 1/2")	101	LF
BAR REINFORCING STEEL (BRIDGE)	125,154	LB
BAR REINFORCING STEEL (RETAINING WALL)	40,508	LB
MINOR CONCRETE (GUTTER) (LF)	38	LF
TUBULAR BICYCLE RAILING	348	LF
CONCRETE BARRIER (TYPE 736 MODIFIED)	211	LF
CONCRETE BARRIER (TYPE 742 MODIFIED)	145	LF

(3) **REPLACED PER ADDENDUM No. 3, DATED JANUARY 13, 2015**

BRIAN MORI
DESIGN ENGINEER

	BY	CHECKED
DESIGN	Nora Kyo	Mary Beall
DETAILS	E. Hallstrom	Mary Beall
QUANTITIES	Nora Kyo	E. Hallstrom/M. Beall

LOAD & RESISTANCE FACTOR DESIGN — LIVE LOADING: HL93 W/"LOW-BOY"; PERMIT DESIGN VEHICLE

	BY	CHECKED
LAYOUT	Nora Kyo	Mary Beall
SPECIFICATIONS	Dave Klein	PLANS AND SPECS COMPARED Dave Klein

ORIGINAL SCALE IN INCHES FOR REDUCED PLANS 0 1 2 3

STATE OF CALIFORNIA
DEPARTMENT OF TRANSPORTATION

DIVISION OF ENGINEERING SERVICES
STRUCTURE DESIGN
DESIGN BRANCH 8

BRIDGE NO. 21-0113
POST MILE 47.13

TROUTDALE CREEK BRIDGE (REPLACEMENT)
GENERAL PLAN

UNIT: 3593
PROJECT NUMBER & PHASE: 04000011041
CONTRACT NO.: 04-4A0901

DISREGARD PRINTS BEARING EARLIER REVISION DATES
REVISION DATES: 1/30/13 5/28/13 3/18/14
SHEET 1 OF 30

STRUCTURES DESIGN GENERAL PLAN SHEET (ENGLISH) (REV.09-01-10)

FILE => 21-0113-a-gp.dgn

USERNAME => s128530 DATE PLOTTED => 12-JAN-2015 TIME PLOTTED => 13:21

DIST	COUNTY	ROUTE	POST MILES TOTAL PROJECT	SHEET No.	TOTAL SHEETS
04	Nap	29	47.0/47.2	108	146

Mary K Beall 3/15/14
REGISTERED CIVIL ENGINEER DATE

June 23, 2014
PLANS APPROVAL DATE

REGISTERED PROFESSIONAL ENGINEER
MARY K. BEALL
No. C76357
Exp. 12/31/14
CIVIL
STATE OF CALIFORNIA

The State of California or its officers or agents shall not be responsible for the accuracy or completeness of scanned copies of this plan sheet.

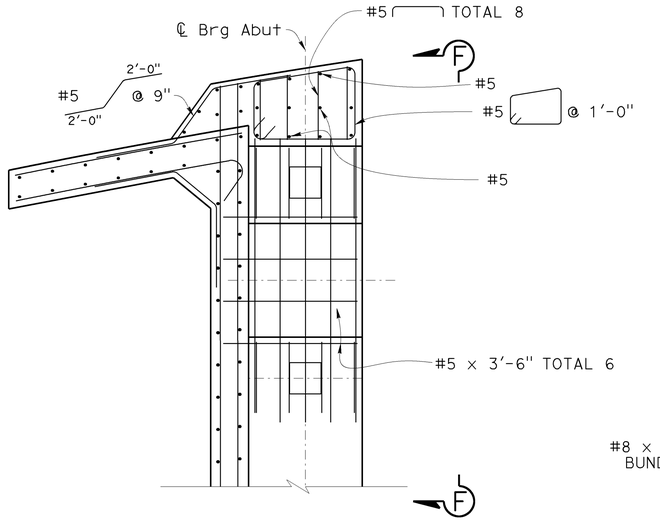

Note:
Abutment 1 LT shown, Abutment 2 LT similar.

SHEAR KEY @ ABUT 1 LT
1/2"=1'-0"

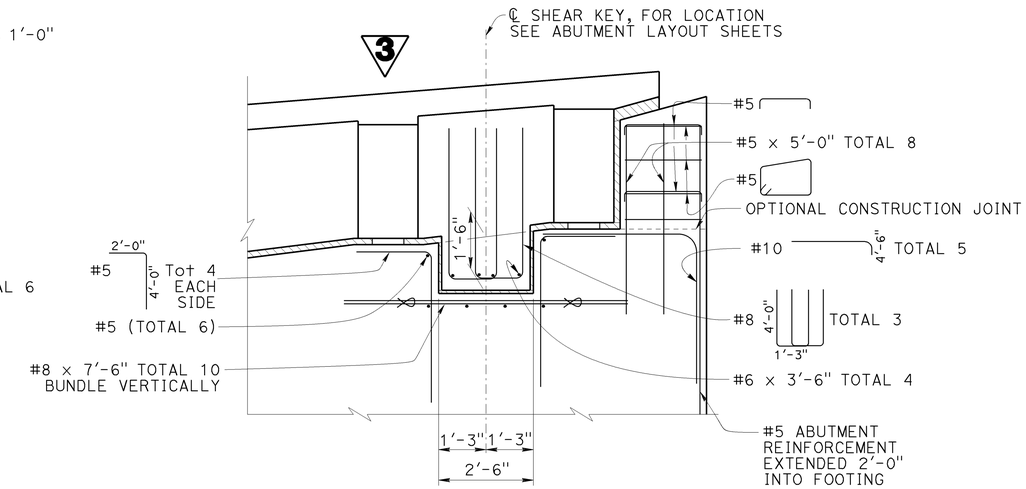

VIEW F-F
1/2"=1'-0"

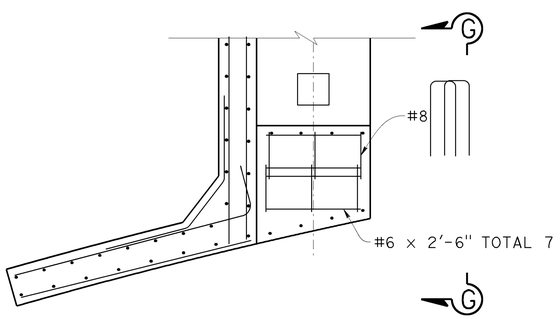

Note:
Abutment 1 RT shown, Abutment 2 RT similar.

SHEAR KEY @ ABUT 1 RT
1/2"=1'-0"

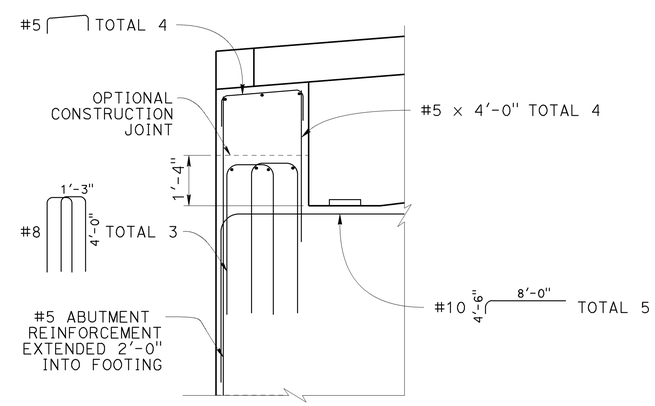

VIEW G-G
1/2"=1'-0"

Note:
Some reinforcement not shown for clarity.

Note:
The contractor shall verify all controlling field dimensions before ordering or fabricating any material.

3 REPLACED PER ADDENDUM No. 3, DATED JANUARY 13, 2015

	BY	CHECKED
DESIGN	Nora Kyo	Mary Beall
DETAILS	E. Hallstrom	Mary Beall
QUANTITIES	Nora Kyo	E. Hallstrom/M. Beall

STATE OF CALIFORNIA
DEPARTMENT OF TRANSPORTATION

DIVISION OF ENGINEERING SERVICES
STRUCTURE DESIGN
DESIGN BRANCH 8

BRIDGE NO. 21-0113
POST MILE 47.13

TROUTDALE CREEK BRIDGE (REPLACEMENT)
ABUTMENT DETAILS No. 3

STRUCTURES DESIGN DETAIL SHEET (ENGLISH) (REV. 09-01-10)

ORIGINAL SCALE IN INCHES FOR REDUCED PLANS 0 1 2 3

UNIT: 3593
PROJECT NUMBER & PHASE: 04000011041
CONTRACT NO.: 04-4A0901

DISREGARD PRINTS BEARING EARLIER REVISION DATES
REVISION DATES 8/16/13 10/17/13 3/15/14

SHEET 9 OF 30

FILE => 21-0113-f-abut_det03.dgn

USERNAME => s128530 DATE PLOTTED => 08-JAN-2015 TIME PLOTTED => 13:42

DIST	COUNTY	ROUTE	POST MILES TOTAL PROJECT	SHEET No.	TOTAL SHEETS
04	Nap	29	47.0/47.2	109	146

Mary K Beall 3/15/14
REGISTERED CIVIL ENGINEER DATE

June 23, 2014
PLANS APPROVAL DATE

REGISTERED PROFESSIONAL ENGINEER
MARY K. BEALL
No. C76357
Exp. 12/31/14
CIVIL
STATE OF CALIFORNIA

The State of California or its officers or agents shall not be responsible for the accuracy or completeness of scanned copies of this plan sheet.

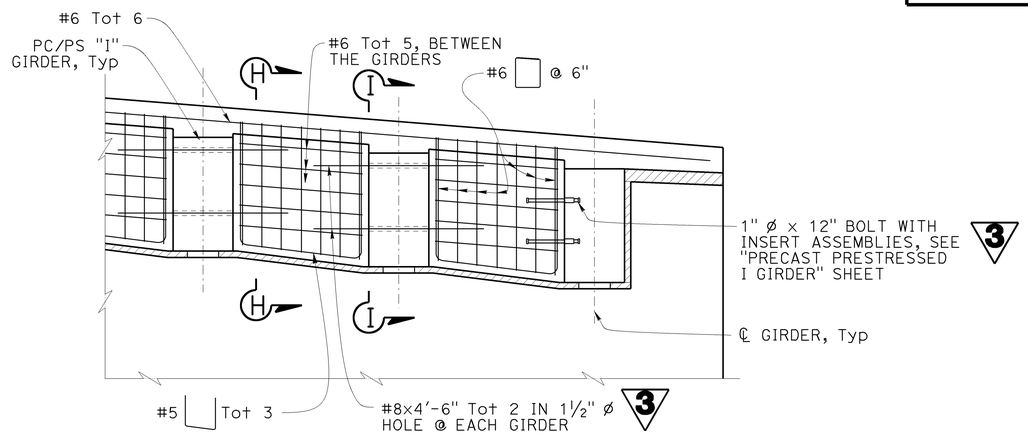

PART ELEVATION
½"=1'-0"

NOTE:
Abutment 2 RT shown, other locations similar.

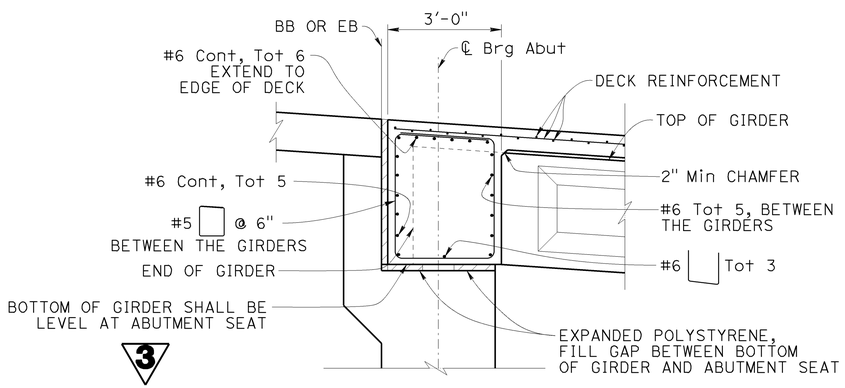

SECTION H-H
½"=1'-0"

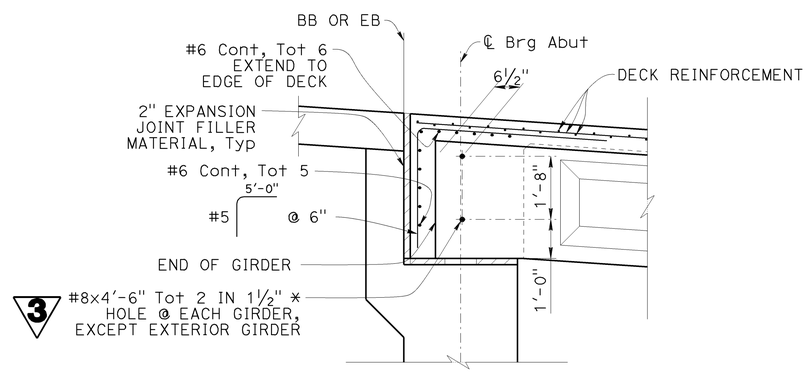

Note:
For details not shown, see "Precast Prestressed I Girder" sheet.

SECTION I-I
½"=1'-0"

Note:
The contractor shall verify all controlling field dimensions before ordering or fabricating any material.

3 REPLACED PER ADDENDUM No. 3, DATED JANUARY 13, 2015

	BY	CHECKED
DESIGN	Nora Kyo	Mary Beall
DETAILS	E. Hallstrom	Mary Beall
QUANTITIES	Nora Kyo	E. Hallstrom/M. Beall

STATE OF CALIFORNIA
DEPARTMENT OF TRANSPORTATION

DIVISION OF ENGINEERING SERVICES
STRUCTURE DESIGN
DESIGN BRANCH 8

BRIDGE NO. 21-0113
POST MILE 47.13

TROUTDALE CREEK BRIDGE (REPLACEMENT)
ABUTMENT DETAILS No. 4

STRUCTURES DESIGN DETAIL SHEET (ENGLISH) (REV. 09-01-10)

ORIGINAL SCALE IN INCHES FOR REDUCED PLANS 0 1 2 3

UNIT: 3593
PROJECT NUMBER & PHASE: 04000011041
CONTRACT NO.: 04-4A0901

DISREGARD PRINTS BEARING EARLIER REVISION DATES

REVISION DATES: 8/16/13 9/16/13 10/17/13 3/15/14

SHEET 10 OF 30

FILE => 21-0113-f-abut_det04.dgn

USERNAME => s128530 DATE PLOTTED => 08-JAN-2015 TIME PLOTTED => 13:42

DIST	COUNTY	ROUTE	POST MILES TOTAL PROJECT	SHEET No.	TOTAL SHEETS
04	Nap	29	47.0/47.2	115	146

Mary K Beall 3/15/14
REGISTERED CIVIL ENGINEER DATE

June 23, 2014
PLANS APPROVAL DATE

The State of California or its officers or agents shall not be responsible for the accuracy or completeness of electronic copies of this plan sheet.

REGISTERED PROFESSIONAL ENGINEER MARY K. BEALL No. C76357 Exp. 12/31/14 CIVIL STATE OF CALIFORNIA

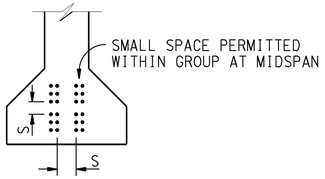

CLEARANCES FOR PRETENSIONED STRANDS

1. Strands may be bundled in groups consisting of 3 vertically, 2 horizontally and separated at the ends
2. The Min distance "S" between groups or individual strands is 1½" for ⅜" ø strands, 1¾" for ½" ø strands, 2" for 0.6" ø strands
3. "S" is measured between centers of adjacent strands
4. Approval by the Engineer is required for deviation

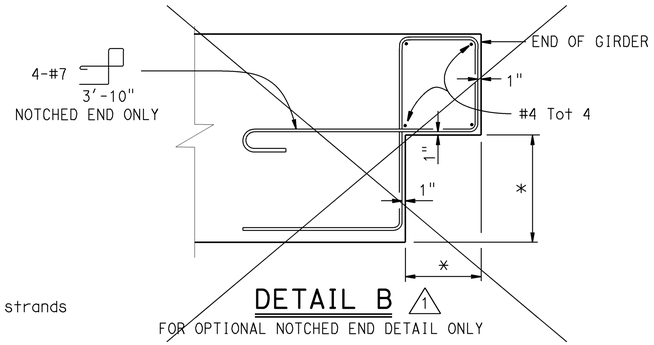

DETAIL B 1

FOR OPTIONAL NOTCHED END DETAIL ONLY

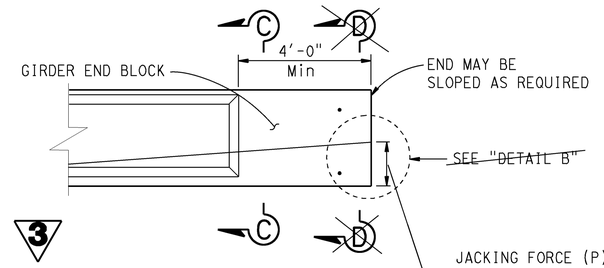

~~OPTIONAL NOTCHED~~ END DETAIL 1

GENERAL NOTES

JACKING FORCE (P): The jacking force required at the point of control along the span. The jacking force does not include any fabrication specific losses.

The maximum tensile stress in the prestressing steel upon release shall not exceed 75% of the specified minimum ultimate tensile strength of the prestressing steel.

The maximum temporary tensile stress (jacking stress) in the prestressing steel shall not exceed 80% of the specified minimum ultimate tensile strength of the prestressing steel.

CONCRETE STRENGTH: f'ci is at time of initial stressing
f'c is at 28 days

DEFLECTION COMPONENTS: Informational - to be used in setting screed line elevations

Screed line elevations for deck concrete will be determined by the Engineer.

Contractor may interpolate "P" and "X" values between limits shown, as approved by the Engineer.

Use epoxy coated reinforcement in Environmental Area III

Girder location or designation and length	Jacking Force (P) (Kips) "X"		"Y" (in)	Concrete Strength (ksi) f'ci	Concrete Strength (ksi) f'c	Midspan Dead Load Deflection (inches) Deck	Midspan Dead Load Deflection (inches) Rail
58'-0"	4"	450	12	5	6	0.51	0.04
	6"	480					
A 58'-0"	4"	400	12	5	6	0.35	0.04
	6"	400					

For location of A, see "GIRDER LAYOUT" sheet.

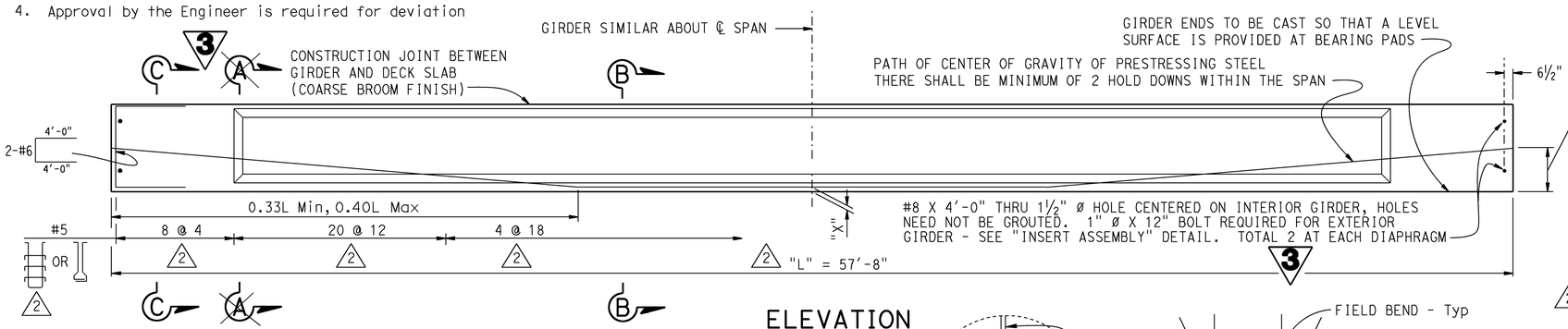

ELEVATION

3 REPLACED PER ADDENDUM No. 3, DATED JANUARY 13, 2015

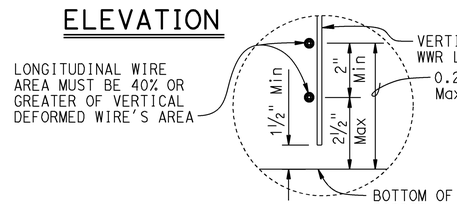

DETAIL A

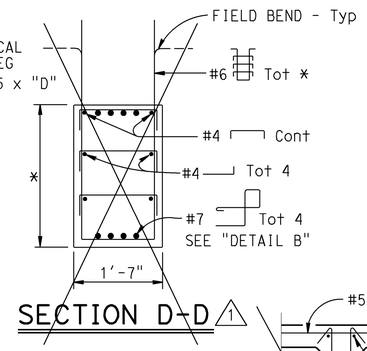

SECTION D-D 1

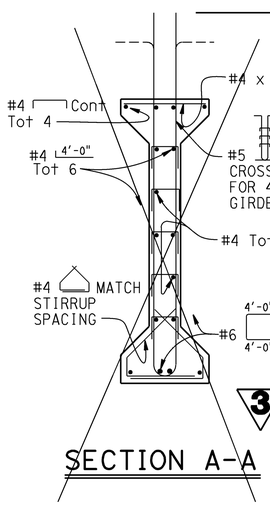

SECTION A-A

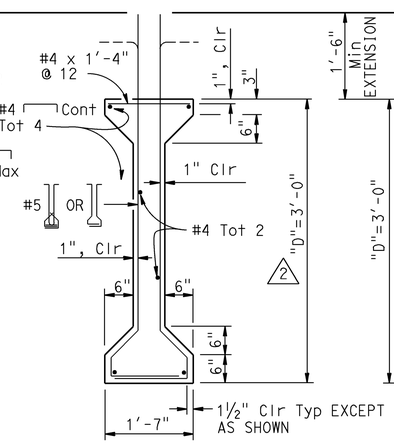

SECTION B-B

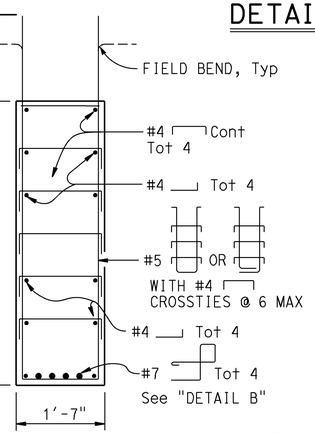

SECTION C-C

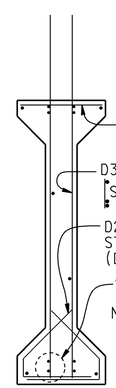

OPTIONAL WELDED WIRE REINFORCEMENT (WWR) DETAIL

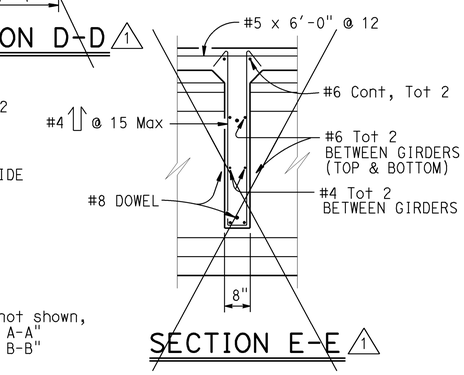

SECTION E-E 1

WWR NOTE: MANUFACTURER'S SHOP DRAWING SHALL CONFORM TO THE REINFORCEMENT SHOWN ON THIS SHEET AS NOTED AND THE SPECIAL PROVISIONS

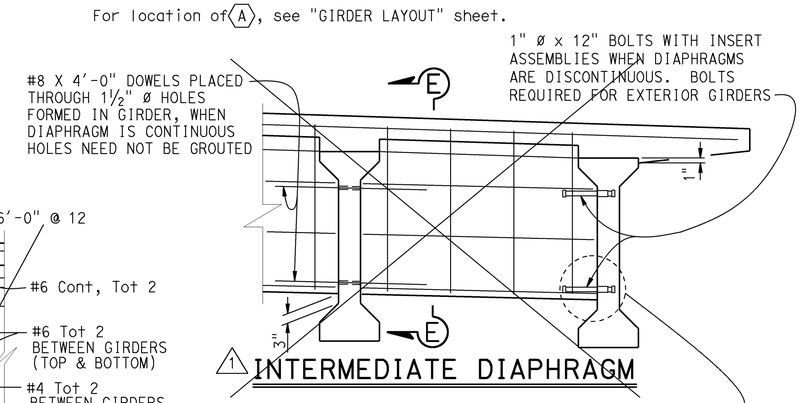

1 INTERMEDIATE DIAPHRAGM

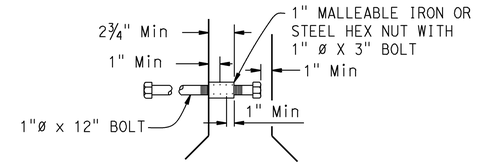

INSERT ASSEMBLY

NO SCALE

REVISED STANDARD DRAWING			STATE OF CALIFORNIA DEPARTMENT OF TRANSPORTATION	DIVISION OF ENGINEERING SERVICES	BRIDGE NO. 21-0113	TROUTDALE CREEK BRIDGE (REPLACEMENT)
FILE NO. XS1-120	APPROVAL DATE July 2011	1 DETAIL REMOVED 2 INFORMATION ADDED			POST MILE 47.13	PRECAST PRESTRESSED I GIRDER

DS OSD 2147A (ENGLISH STANDARD DRAWING "XS" BORDER REV. 02-02-11)

ORIGINAL SCALE IN INCHES FOR REDUCED PLANS 0 1 2 3

UNIT: 3593
PROJECT NUMBER & PHASE: 04000011041
CONTRACT NO.: 04-4A0901

DISREGARD PRINTS BEARING EARLIER REVISION DATES → REVISION DATES 7/30/13 10/07/13 3/15/14

SHEET 16 OF 30

FILE => 21-0113-1-xs-1-120.dgn

USERNAME => s128530 DATE PLOTTED => 08-JAN-2015 TIME PLOTTED => 13:42