To accompany plans dated 12-27-11

| DIST | COUNTY | ROUTE | POST MILES TOTAL PROJECT | SHEET NO. | TOTAL SHEETS |
|---|---|---|---|---|---|
| 04 | Sol | 80 | 30.6/38.7 | 201 | 231 |

Randell D. Hiatt
REGISTERED CIVIL ENGINEER

June 6, 2008
PLANS APPROVAL DATE

REGISTERED PROFESSIONAL ENGINEER Randell D. Hiatt No. C50200 Exp. 6-30-09 CIVIL STATE OF CALIFORNIA

*The State of California or its officers or agents shall not be responsible for the accuracy or completeness of electronic copies of this plan sheet.*

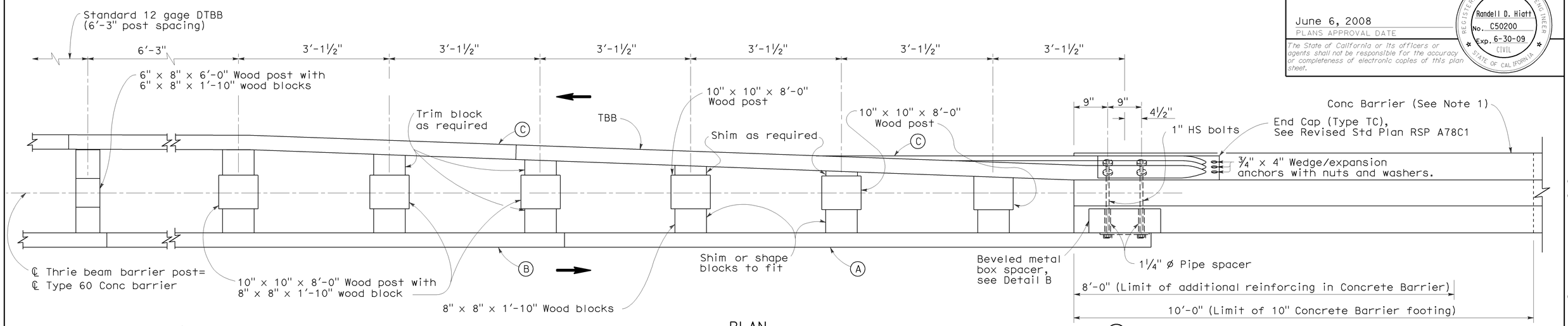


PLAN

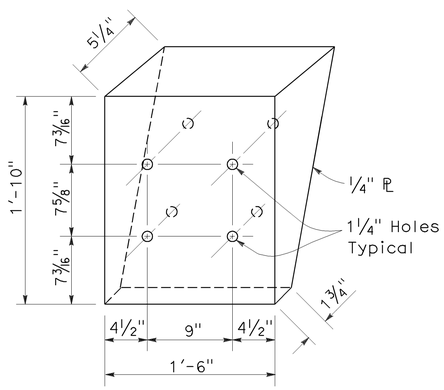


DETAIL B

Beveled metal box spacer
See Note 3

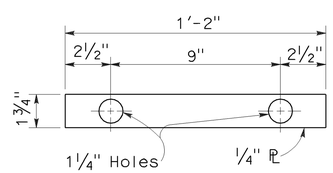


DETAIL C

PLATE 'A'

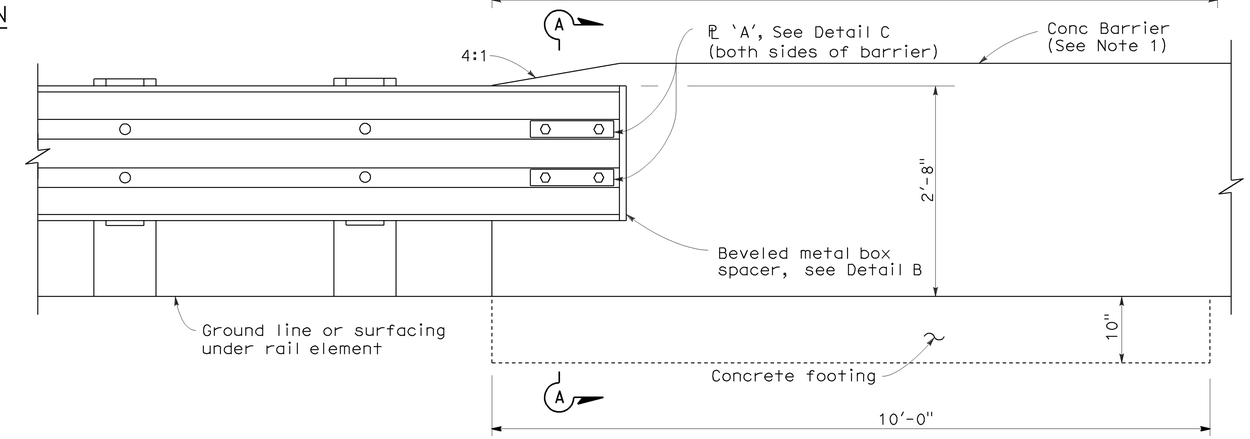


ELEVATION

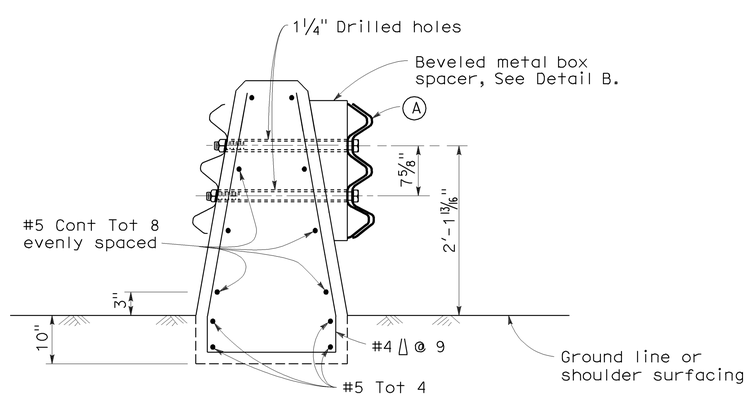


SECTION A-A

(Type 60 Conc Barrier shown)

## LEGEND

(A) Nested thrie beam elements (one 12 gage element nested over one 10 gage element).

(B) One 10 gage thrie beam element.

(C) One 12 gage thrie beam element.

10 gage = 0.135" thick

12 gage = 0.108" thick

## NOTES:

1. For details of Concrete Barrier Type 60, see Revised Standard Plan RSP A76A. Thrie beam barrier connections to Concrete Barrier Type 60S and Type 60G are similar to details shown on this plan.
2. For additional thrie beam barrier details, see Standard Plan A78A, Revised Standard Plans RSPs A78B and A78C1, and Standard Plan A78C2.
3. Where beveled metal box spacer is installed, place 1¼" ø x 3¼" and 1¼" ø x 2" pipe spacers on 1" HS bolts passing through interior of box.
4. Direction of traffic indicated by ➡.

STATE OF CALIFORNIA
DEPARTMENT OF TRANSPORTATION

# DOUBLE THRIE BEAM BARRIER CONNECTION TO CONCRETE BARRIER

NO SCALE

RSP A78I DATED JUNE 6, 2008 SUPERSEDES STANDARD PLAN A78I
DATED MAY 1, 2006 - PAGE 96 OF THE STANDARD PLANS BOOK DATED MAY 2006.

**REVISED STANDARD PLAN RSP A78I**

**2006 REVISED STANDARD PLAN RSP A78I**

5-1-08

| DIST | COUNTY | ROUTE | POST MILES TOTAL PROJECT | SHEET NO. | TOTAL SHEETS |
|---|---|---|---|---|---|
| 04 | Sol | 80 | 30.6/38.7 | 202 | 231 |

Randell D. Hiatt
REGISTERED CIVIL ENGINEER

June 6, 2008
PLANS APPROVAL DATE

REGISTERED PROFESSIONAL ENGINEER Randell D. Hiatt No. C50200 Exp. 6-30-09 CIVIL STATE OF CALIFORNIA

*The State of California or its officers or agents shall not be responsible for the accuracy or completeness of electronic copies of this plan sheet.*

*To accompany plans dated* 12-27-11

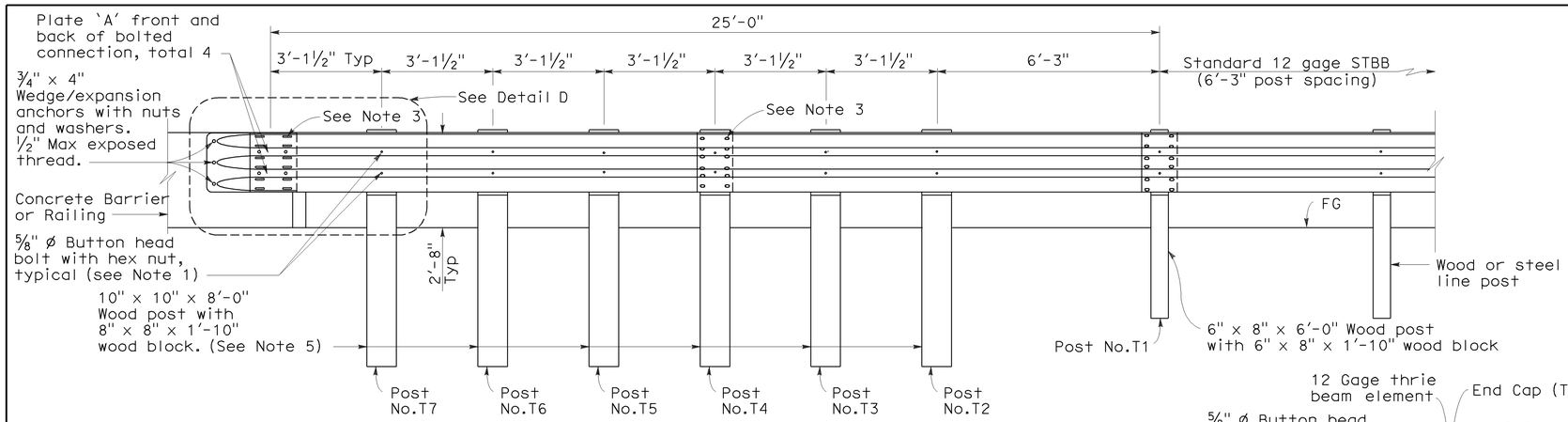


ELEVATION

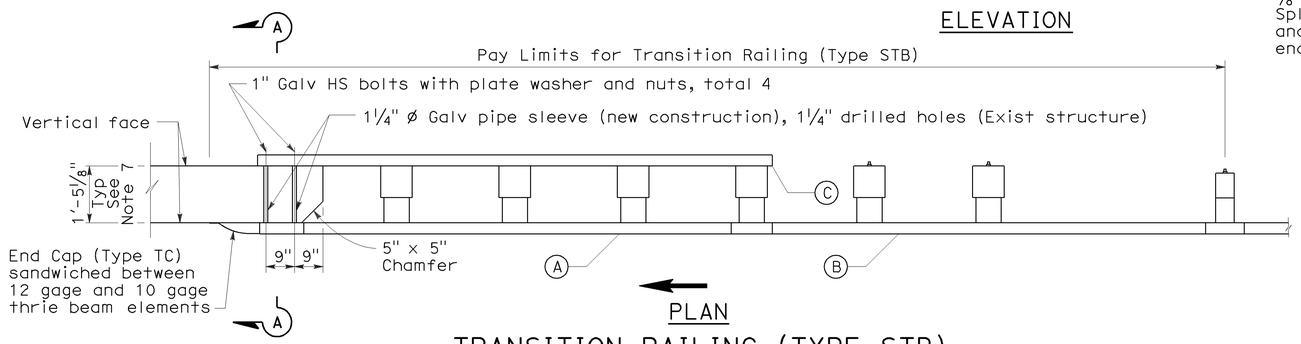


PLAN

TRANSITION RAILING (TYPE STB)

(No Blockout Attachment)

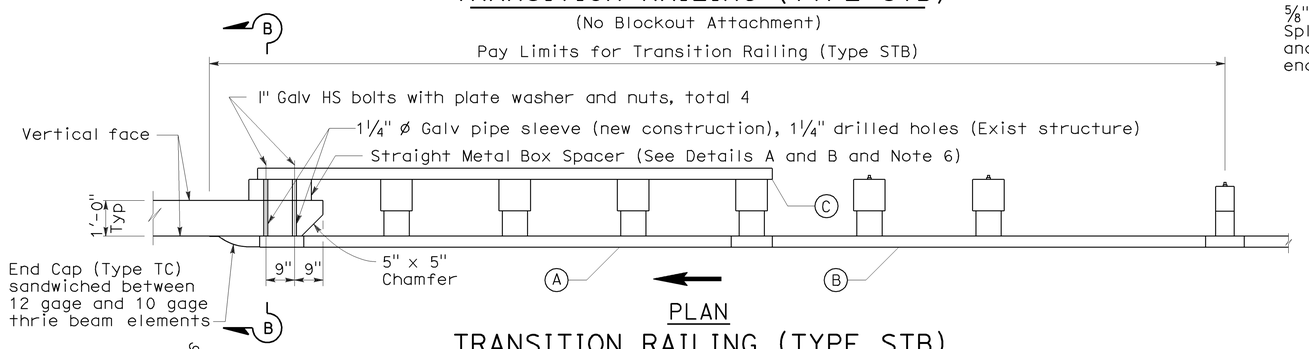


PLAN

TRANSITION RAILING (TYPE STB)

(Blockout Attachment)

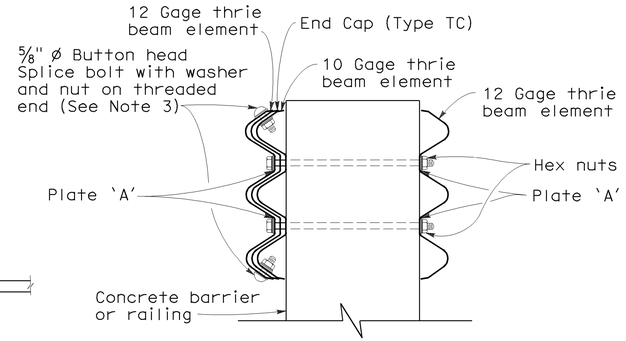


SECTION A-A

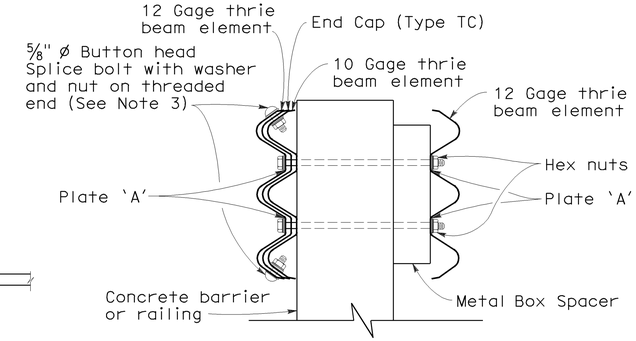


SECTION B-B

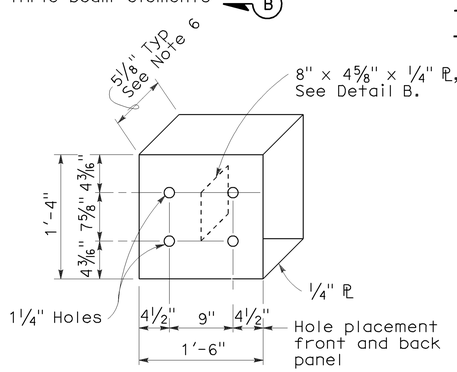


DETAIL A

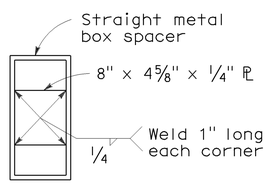


DETAIL B

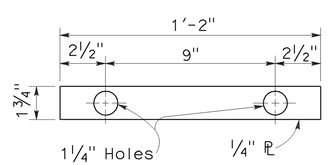


DETAIL C

STRAIGHT METAL BOX SPACER

PLATE 'A'

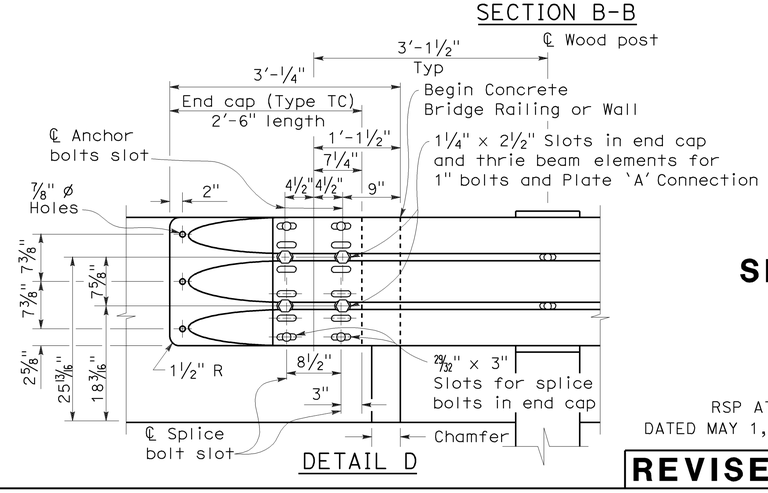


DETAIL D

## LEGEND

(A) Nested thrie beam elements (one 12 gage element nested over one 10 gage element).

(B) One 10 gage thrie beam element.

(C) One 12 gage thrie beam element.

10 gage = 0.135" thick

12 gage = 0.108" thick

## NOTES:

1. Use ⅝" ø Button head bolts and hex nuts for connection to posts. No washer on rail face for bolted connections to post.
2. The nested rail elements, end cap and single 10 gage thrie beam element, may be spliced together prior to bolting the elements to the wood post and concrete barrier or railing.
3. Exterior splice bolt holes for rail element splices at Post No.T4 and the connection to the concrete barrier or railing shall be the standard 29/32" x 1⅛" slot size. Interior splice bolt holes at these locations may be increased up to 1¼" ø. Only the top 2 and the bottom 2 splice bolts with washers and nuts are required for rail splices at Post No.T4 and the connection to the concrete barrier or railing.
4. Direction of adjacent traffic indicated by ⟶.
5. The top elevation of Post Nos.T2 through T7 shall not project more than 1" above the top elevation of the rail element.
6. The depth of the metal box spacer varies from the 5⅛" to 1½" and is dependent on the width of the concrete railing or wall. The combined dimension for the depth of the metal box spacer plus the width of railing or wall is typically 17⅛". Where the space between the backside of the concrete railing or wall and the rear thrie beam element is less than 1½" metal plates similar to Plate 'A' are to be used as spacers.
7. Where the width of the concrete railing or wall is greater than 17⅛", wood blocks are to be used to fill the space created between the backside of Post No.4 through No.7 and the rear thrie beam element. These wood blocks shall be 8" in width and 1'-2" in length. The dimension between the front thrie beam element and the rear thrie beam element is to match the width of the concrete railing or wall.
8. For details of End Cap (Type TC), see Revised Standard Plan RSP A78C1.

STATE OF CALIFORNIA
DEPARTMENT OF TRANSPORTATION

# SINGLE THRIE BEAM BARRIER TRANSITION RAILING (TYPE STB)

NO SCALE

RSP A78J DATED JUNE 6, 2008 SUPERSEDES STANDARD PLAN A78J DATED MAY 1, 2006 - PAGE 97 OF THE STANDARD PLANS BOOK DATED MAY 2006.

**REVISED STANDARD PLAN RSP A78J**

**2006 REVISED STANDARD PLAN RSP A78J**

5-1-08

| DIST | COUNTY | ROUTE | POST MILES TOTAL PROJECT | SHEET NO. | TOTAL SHEETS |
|---|---|---|---|---|---|
| 04 | Sol | 80 | 30.6/38.7 | 203 | 231 |

Randell D. Hiatt
REGISTERED CIVIL ENGINEER

June 6, 2008
PLANS APPROVAL DATE

REGISTERED PROFESSIONAL ENGINEER
Randell D. Hiatt
No. C50200
Exp. 6-30-09
CIVIL
STATE OF CALIFORNIA

*The State of California or its officers or agents shall not be responsible for the accuracy or completeness of electronic copies of this plan sheet.*

*To accompany plans dated* 12-27-11

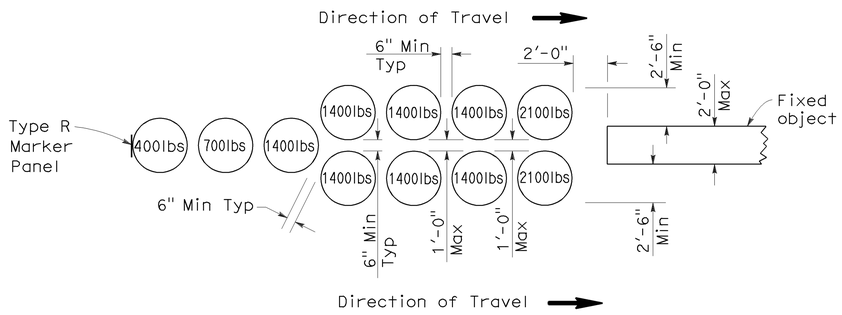


## ARRAY 'U11'

Approach speed less than 45 mph

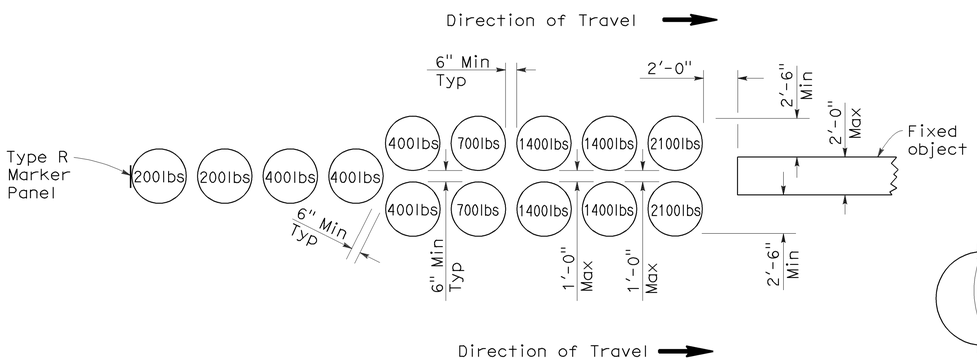


## ARRAY 'U14'

Approach speed 45 mph or more

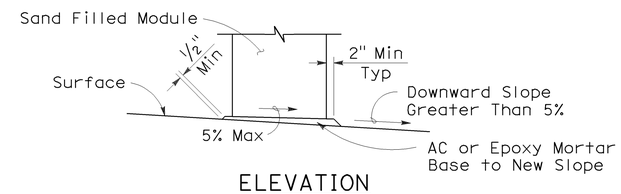


ELEVATION

## SLOPED SEAT DETAIL

(See Note 4)

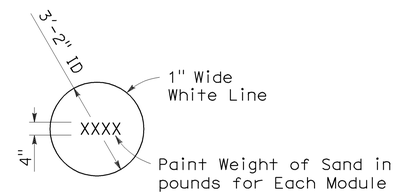


## PAINTING DETAIL

(See Note 5)

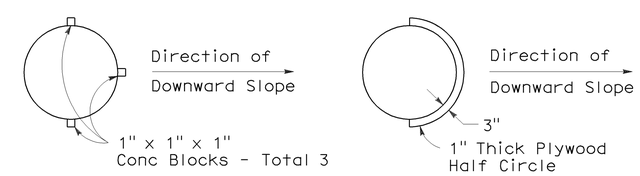


ALTERNATIVE 1 ALTERNATIVE 2

PLAN

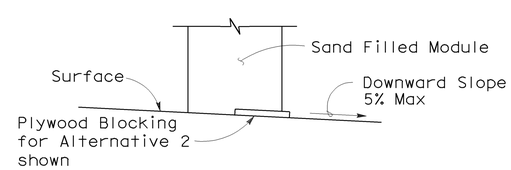


ELEVATION

## BRIDGE DECK MODULE BLOCKING DETAILS

(See Note 6)

## NOTES:

1. (XXX) Indicates module location and mass of sand in pounds for each module. Module spacing is based on the greater diameter of the modules.
2. All sand weights are nominal.
3. Each module is to contain amount of sand indicated, supported according to the manufacturer's instructions.
4. Modules shall be placed on asphalt concrete, epoxy mortar or concrete surface. Modules to be placed on surfacing with greater than 5% downward slope shall be seated as shown.
5. Mass of sand and outline of each module shall be painted on the surface at each module location.
6. Module blocking, epoxied to the deck surface, is required for all modules placed on bridge decks. Two acceptable alternatives are shown. Other alternatives recommended by the manufacturer and approved by the Engineer will be accepted.
7. Place the top of the Type R marker panel 1" below the module lid.
8. Approach speeds indicated conform to NCHRP Report criteria.

STATE OF CALIFORNIA
DEPARTMENT OF TRANSPORTATION

# CRASH CUSHION, SAND FILLED (UNIDIRECTIONAL)

NO SCALE

RSP A81A DATED JUNE 6, 2008 SUPERSEDES STANDARD PLAN A81A
DATED MAY 1, 2006 - PAGE 99 OF THE STANDARD PLANS BOOK DATED MAY 2006.

**REVISED STANDARD PLAN RSP A81A**

**2006 REVISED STANDARD PLAN RSP A81A**

5-15-08

| DIST | COUNTY | ROUTE | POST MILES TOTAL PROJECT | SHEET NO. | TOTAL SHEETS |
|---|---|---|---|---|---|
| 04 | Sol | 80 | 30.6/38.7 | 204 | 231 |

Randell D. Hiatt
REGISTERED CIVIL ENGINEER

June 6, 2008
PLANS APPROVAL DATE

REGISTERED PROFESSIONAL ENGINEER
Randell D. Hiatt
No. C50200
Exp. 6-30-09
CIVIL
STATE OF CALIFORNIA

*The State of California or its officers or agents shall not be responsible for the accuracy or completeness of electronic copies of this plan sheet.*

*To accompany plans dated* 12-27-11

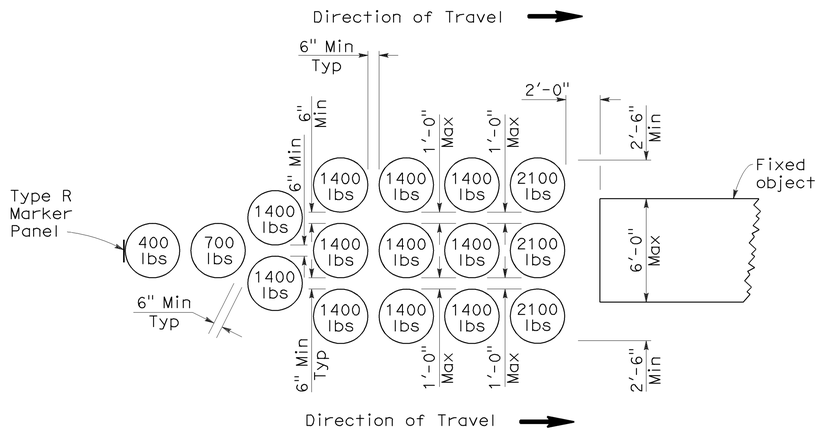


## ARRAY 'U16'

Approach speed less than 45 mph

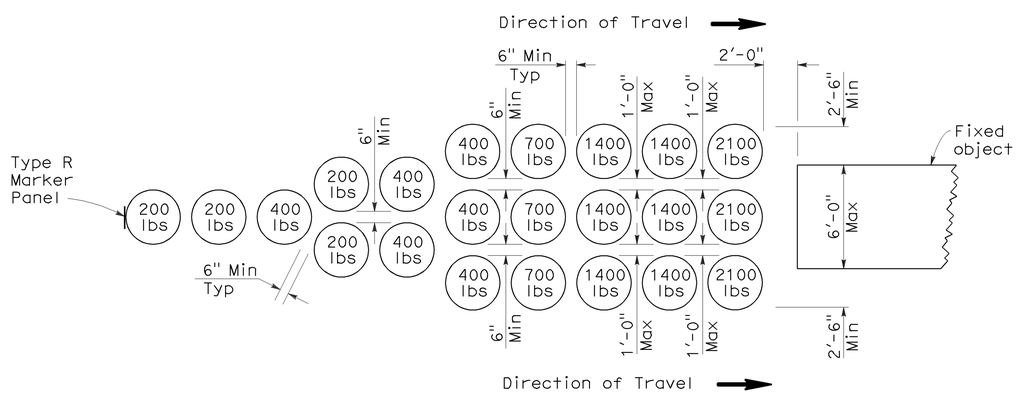


## ARRAY 'U21'

Approach speed 45 mph or more

## NOTES:

1. (XXX) Indicates module location and weight of sand in pounds for each module. Module spacing is based on the greater diameter of the modules.
2. All sand weights are nominal.
3. Each module is to contain amount of sand indicated, supported according to the manufacturer's instructions.
4. Modules shall be placed on asphalt concrete, epoxy mortar or concrete surface. Modules to be placed on surfacing with greater than 5% downward slope shall be seated as shown.
5. Mass of sand and outline of each module shall be painted on the surface at each module location.
6. Module blocking, epoxied to the deck surface, is required for all modules placed on bridge decks. Two acceptable alternatives are shown. Other alternatives recommended by the manufacturer and approved by the Engineer will be accepted.
7. Place the top of the Type R marker panel 1" below the module lid.
8. Approach speeds indicated conform to NCHRP Report criteria.

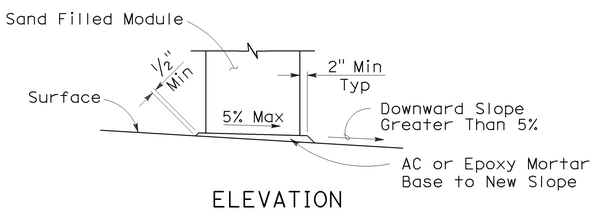


ELEVATION

## SLOPED SEAT DETAIL

(See Note 4)

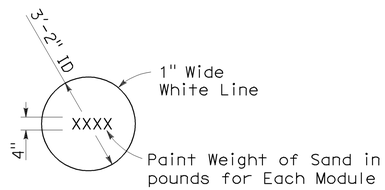


## PAINTING DETAIL

(See Note 5)

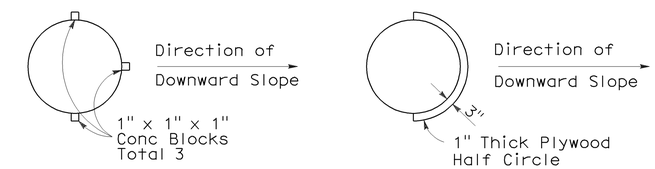


ALTERNATIVE 1 ALTERNATIVE 2

PLAN

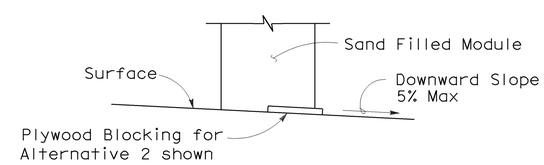


ELEVATION

## BRIDGE DECK MODULE BLOCKING DETAILS

(See Note 6)

STATE OF CALIFORNIA
DEPARTMENT OF TRANSPORTATION

# CRASH CUSHION, SAND FILLED (UNIDIRECTIONAL)

NO SCALE

RSP A81B DATED JUNE 6, 2008 SUPERSEDES STANDARD PLAN A81B DATED MAY 1, 2006 - PAGE 100 OF THE STANDARD PLANS BOOK DATED MAY 2006.

**REVISED STANDARD PLAN RSP A81B**

**2006 REVISED STANDARD PLAN RSP A81B**

5-15-08

| DIST | COUNTY | ROUTE | POST MILES TOTAL PROJECT | SHEET NO. | TOTAL SHEETS |
|---|---|---|---|---|---|
| 04 | Sol | 80 | 30.6/38.7 | 205 | 231 |

Randell D. Hiatt
REGISTERED CIVIL ENGINEER

June 6, 2008
PLANS APPROVAL DATE

REGISTERED PROFESSIONAL ENGINEER
Randell D. Hiatt
No. C50200
Exp. 6-30-09
CIVIL
STATE OF CALIFORNIA

*The State of California or its officers or agents shall not be responsible for the accuracy or completeness of electronic copies of this plan sheet.*

*To accompany plans dated* 12-27-11

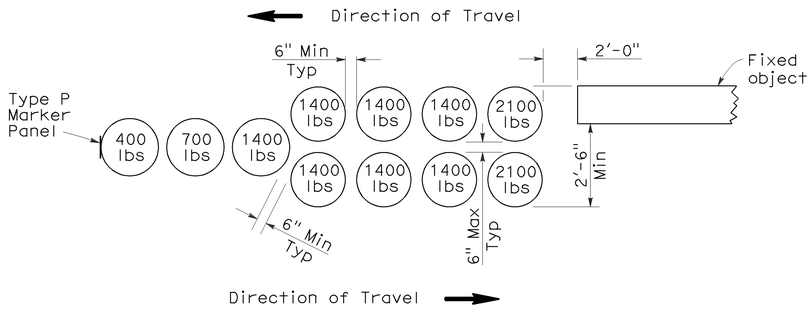


ARRAY 'B11'

Approach speed less than 45 mph

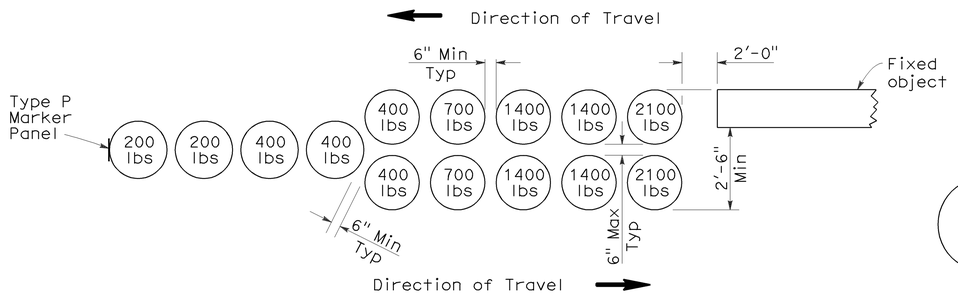


ARRAY 'B14'

Approach speed 45 mph or more

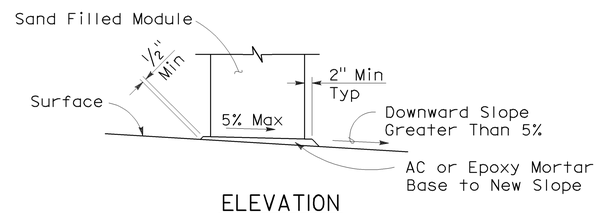


ELEVATION

SLOPED SEAT DETAIL

(See Note 5)

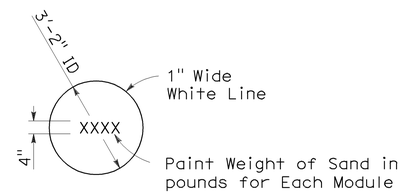


PAINTING DETAIL

(See Note 6)

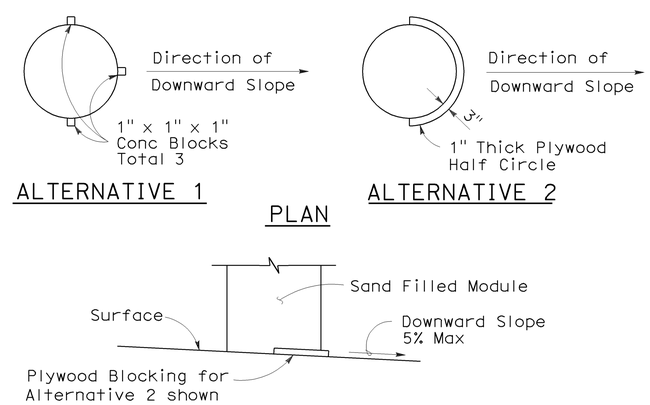


ALTERNATIVE 1

ALTERNATIVE 2

PLAN

ELEVATION

BRIDGE DECK MODULE BLOCKING DETAILS

(See Note 7)

## NOTES:

1. (XXX) Indicates module location and weight of sand in pounds for each module. Module spacing is based on the greater diameter of the module.
2. All sand weights are nominal.
3. Each module is to contain amount of sand indicated, supported according to the manufacturer's instructions.
4. Bidirectional crash cushion arrays may be angled toward approaching traffic. Amount of angle not to exceed 10 degrees.
5. Modules shall be placed on asphalt concrete, epoxy mortar or concrete surface. Modules to be placed on surfacing with greater than 5% downward slope shall be seated as shown.
6. Mass of sand and outline of each module shall be painted on the surface at each module location.
7. Module blocking, epoxied to the deck surface, is required for all modules placed on bridge decks. Two acceptable alternatives are shown. Other alternatives recommended by the manufacturer and approved by the Engineer will be accepted.
8. Place the Type P marker panel so that the bottom of the panel is at the bottom of the module.
9. Approach speeds indicated conform to NCHRP Report criteria.

STATE OF CALIFORNIA
DEPARTMENT OF TRANSPORTATION

# CRASH CUSHION, SAND FILLED (BIDIRECTIONAL)

NO SCALE

RSP A81C DATED JUNE 6, 2008 SUPERSEDES STANDARD PLAN A81C
DATED MAY 1, 2006 - PAGE 101 OF THE STANDARD PLANS BOOK DATED MAY 2006.

**REVISED STANDARD PLAN RSP A81C**

**2006 REVISED STANDARD PLAN RSP A81C**

5-15-08

| DIST | COUNTY | ROUTE | POST MILES TOTAL PROJECT | SHEET NO. | TOTAL SHEETS |
|---|---|---|---|---|---|
| 04 | Sol | 80 | 30.6/38.7 | 206 | 231 |

REGISTERED CIVIL ENGINEER

November 17, 2006
PLANS APPROVAL DATE

REGISTERED PROFESSIONAL ENGINEER Michael Janzen No. 44788 Exp. 03-31-08 CIVIL STATE OF CALIFORNIA

*The State of California or its officers or agents shall not be responsible for the accuracy or completeness of electronic copies of this plan sheet.*

*To accompany plans dated* 12-27-11

**2006 REVISED STANDARD PLAN RSP A87A**

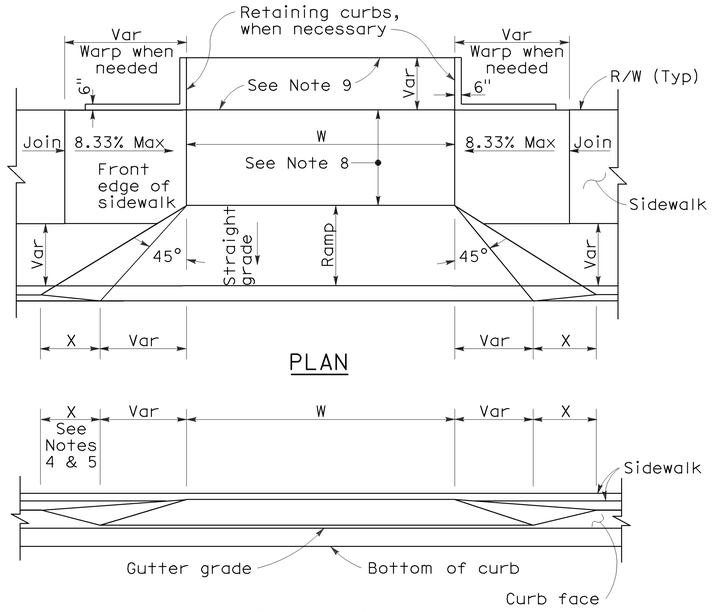


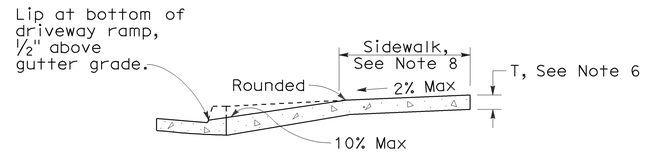


CASE A

Typical driveway, sidewalk not depressed

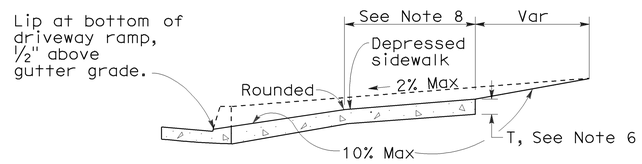


CASE B

Driveway with depressed sidewalk

SECTIONS

## CURB QUANTITIES

| TYPE | CUBIC YARDS PER LINEAR FOOT |
|---|---|
| A1-6 | 0.02585 |
| A1-8 | 0.03084 |
| A2-6 | 0.05903 |
| A2-8 | 0.06379 |
| A3-6 | 0.01036 |
| A3-8 | 0.01435 |
| B1-4 | 0.02185 |
| B1-6 | 0.02930 |
| B2-4 | 0.05515 |
| B2-6 | 0.06171 |
| B3-4 | 0.00641 |
| B3-6 | 0.01074 |
| B4 | 0.05709 |
| D-4 | 0.04083 |
| D-6 | 0.06804 |
| E | 0.06661 |

## TABLE A

| CURB TYPE | DIMENSIONS "H1" | "H2" | "W1" | "W2" |
|---|---|---|---|---|
| A1-6 | 1'-2" | 6" | 7½" | 1½" |
| A1-8 | 1'-4" | 8" | 8" | 2" |
| A2-6 | 1'-0" | 6" | 2'-7½" | 1½" |
| A2-8 | 1'-2" | 8" | 2'-8" | 2" |
| A3-6 | 6" | 5" | 7¼" | 1¼" |
| A3-8 | 8" | 7" | 7¾" | 1¾" |
| B1-4 | 1'-0" | 4" | 7½" | 2½" |
| B1-6 | 1'-2" | 6" | 9" | 4" |
| B2-4 | 10" | 4" | 2'-7½" | 2½" |
| B2-6 | 1'-0" | 6" | 2'-9" | 4" |
| B3-4 | 4" | 3" | 7" | 2" |
| B3-6 | 6" | 5" | 8½" | 3½" |
| D-4 | 10" | 4" | 1'-6" | 1'-1" |
| D-6 | 1'-0" | 6" | 2'-2" | 1'-8" |

## DRIVEWAYS

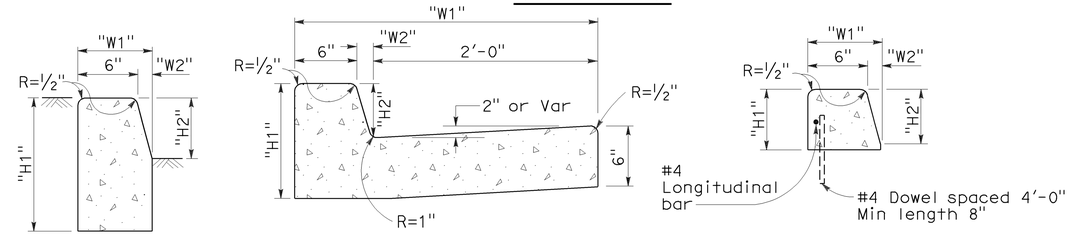


TYPE A1 CURBS
See Table A

TYPE A2 CURBS
See Table A

TYPE A3 CURBS
Superimposed on existing pavement
See Table A

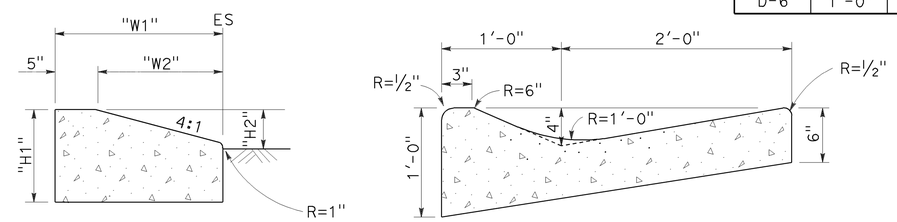


TYPE D CURBS
See Table A

TYPE E CURB

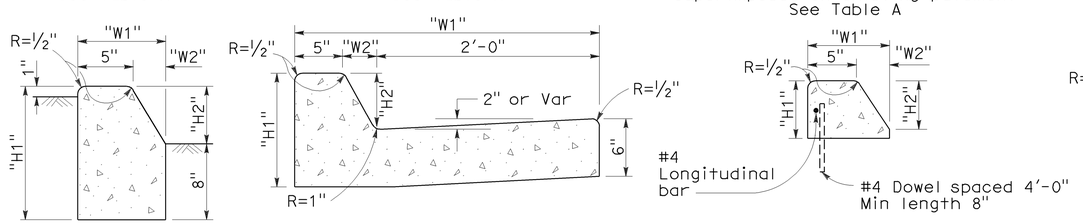


TYPE B1 CURBS
See Table A

TYPE B2 CURBS
See Table A

TYPE B3 CURBS
Superimposed on existing pavement
See Table A

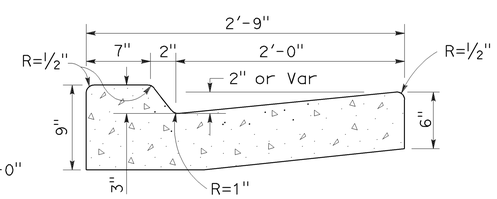


TYPE B4 CURBS

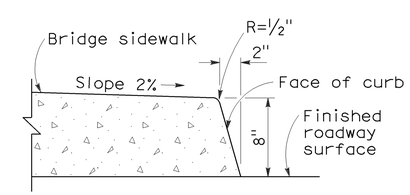


TYPE H CURB
On Bridges

## CURBS

## NOTES:

1. Case A driveway section typically applies.
2. Use Case B driveway section when ramp slopes would exceed 10% in Case A.
3. Use Case B driveway section when sidewalk cross slope would exceed 2% in Case A.
4. X=3'-0" except for curb heights over 10" where 4:1 slopes shall be used on curb slope.
5. X is a variable when sidewalk is located where wheelchairs may traverse the surface. Slopes shall not exceed 8.33%.
6. Sidewalk and ramp thickness "T" at driveway shall be 4" for residental and 6" for commercial.
7. Difference in slope of the driveway ramp and the slope of a line between the gutter and a point on the roadway 5'-0" from gutter line shall not exceed 15%. Reduce driveway ramp slope, not gutter slope, where required.
8. Minimum width of clear passageway for sidewalk shall be 4'-0".
9. Retaining curbs and acquisition of construction easement may be necessary for narrow sidewalks or curb heights in excess of 6".
10. Across the pedestrian route at curb ramp locations, the gutter pan slope shall not exceed 1" of depth for each 2'-0" of width.

STATE OF CALIFORNIA
DEPARTMENT OF TRANSPORTATION

# CURBS AND DRIVEWAYS

NO SCALE

RSP A87A DATED NOVEMBER 17, 2006 SUPERSEDES STANDARD PLAN A87A DATED MAY 1, 2006 - PAGE 113 OF THE STANDARD PLANS BOOK DATED MAY 2006.

**REVISED STANDARD PLAN RSP A87A**

10-25-06

| DIST | COUNTY | ROUTE | POST MILES TOTAL PROJECT | SHEET NO. | TOTAL SHEETS |
|---|---|---|---|---|---|
| 04 | Sol | 80 | 30.6/38.7 | 207 | 231 |

William K. Farnbach
REGISTERED CIVIL ENGINEER

May 15, 2009
PLANS APPROVAL DATE

REGISTERED PROFESSIONAL ENGINEER William K. Farnbach No. C49042 Exp. 9-30-10 CIVIL STATE OF CALIFORNIA

*The State of California or its officers or agents shall not be responsible for the accuracy or completeness of electronic copies of this plan sheet.*

*To accompany plans dated* 12-27-11

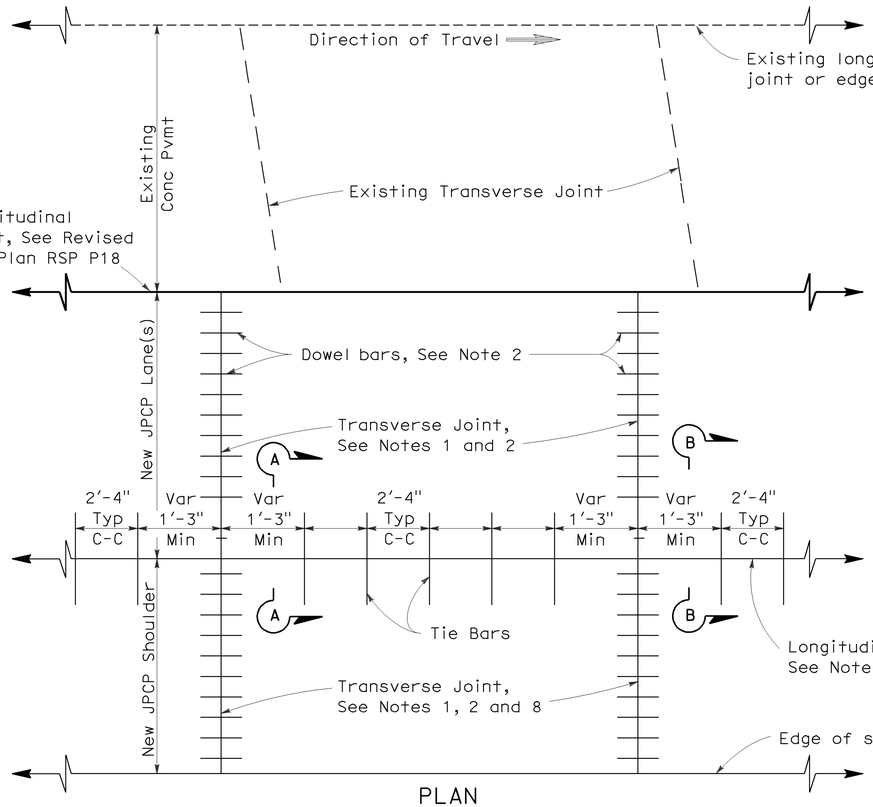


PLAN
LANE/SHOULDER ADDITION OR RECONSTRUCTION
See Notes 6 and 7

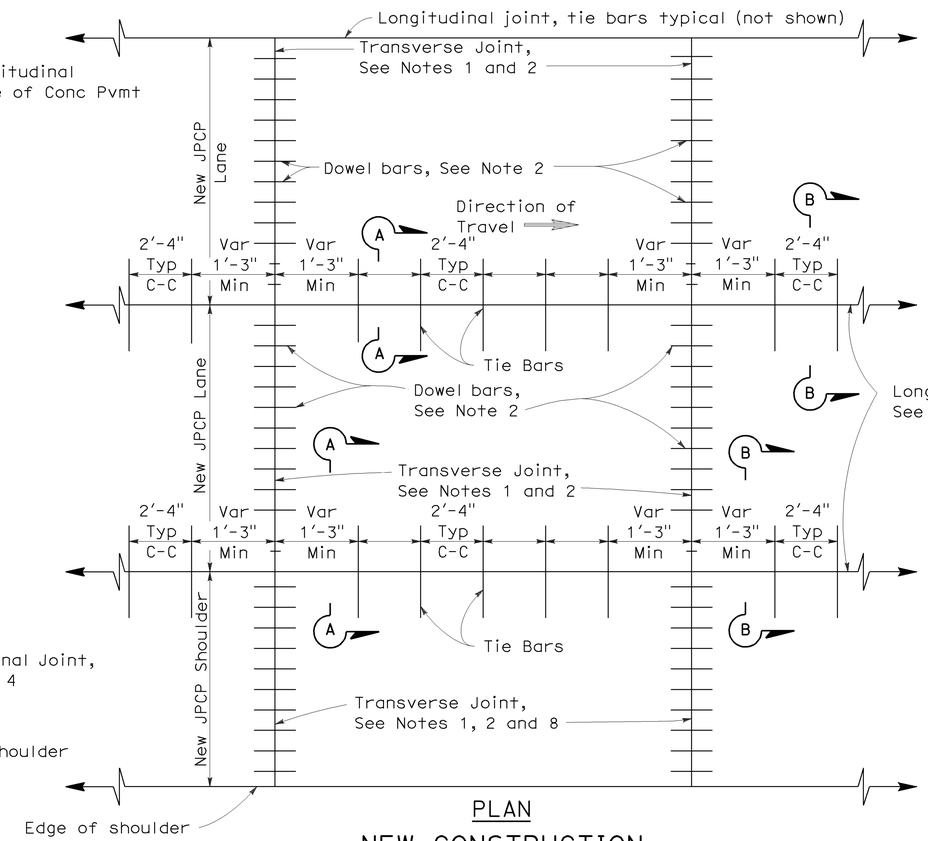


PLAN
NEW CONSTRUCTION
See Notes 6 and 7

## NOTES:

1. Transverse joints shall be constructed at right angles to the longitudinal pavement joints in new jointed plain concrete pavement and spaced at successive repeated intervals of 12', 15', 13' and 14'.
2. For transverse joint and dowel bar details not shown, See Revised Standard Plan RSP P10.
3. Construct longitudinal contraction joints as shown in Section A-A when more than one lane or shoulder widths are placed at one time. If constructing one lane at a time, use longitudinal construction joint, as shown in Section B-B.
4. For additional longitudinal joint details, see Revised Standard Plan RSP P18.
5. If fresh concrete is placed adjacent to existing concrete, the top corner of the new hardened concrete does not need to be rounded to the 1/4" radius as shown.
6. Joint spacing patterns do not apply to intersections.
7. Details can also apply to inside widening.
8. Dowel bars may be omitted from shoulders when the shoulder cross slope is not the same as the adjacent traffic lane.

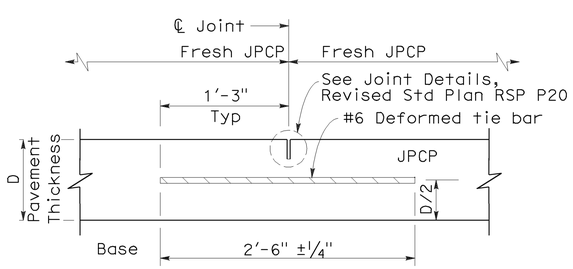


SECTION A-A
LONGITUDINAL CONTRACTION JOINT

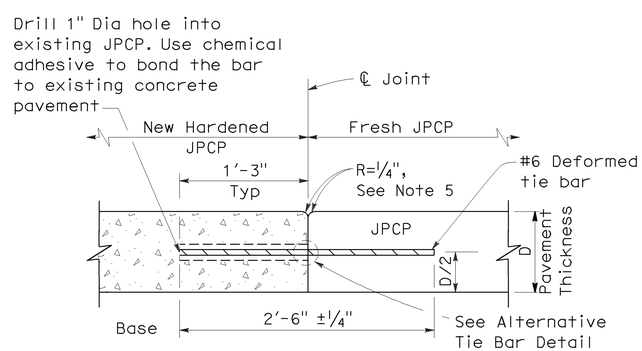


SECTION B-B
LONGITUDINAL CONSTRUCTION JOINT

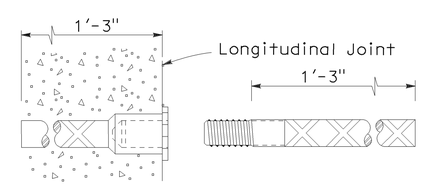


ALTERNATIVE TIE BAR SPLICE DETAIL
(Splice Coupler)

TIE BAR DETAILS

STATE OF CALIFORNIA
DEPARTMENT OF TRANSPORTATION

# JOINTED PLAIN CONCRETE PAVEMENT

NO SCALE

RSP P1 DATED MAY 15, 2009 SUPERSEDES STANDARD PLAN P1
DATED MAY 1, 2006 - PAGE 119 OF THE STANDARD PLANS BOOK DATED MAY 2006.

**REVISED STANDARD PLAN RSP P1**

**2006 REVISED STANDARD PLAN RSP P1**

119

5-8-09

| DIST | COUNTY | ROUTE | POST MILES TOTAL PROJECT | SHEET NO. | TOTAL SHEETS |
|---|---|---|---|---|---|
| 04 | Sol | 80 | 30.6/38.7 | 208 | 231 |

William K. Farnbach
REGISTERED CIVIL ENGINEER

May 15, 2009
PLANS APPROVAL DATE

REGISTERED PROFESSIONAL ENGINEER William K. Farnbach No. C49042 Exp. 9-30-10 CIVIL STATE OF CALIFORNIA

*The State of California or its officers or agents shall not be responsible for the accuracy or completeness of electronic copies of this plan sheet.*

*To accompany plans dated* 12-27-11

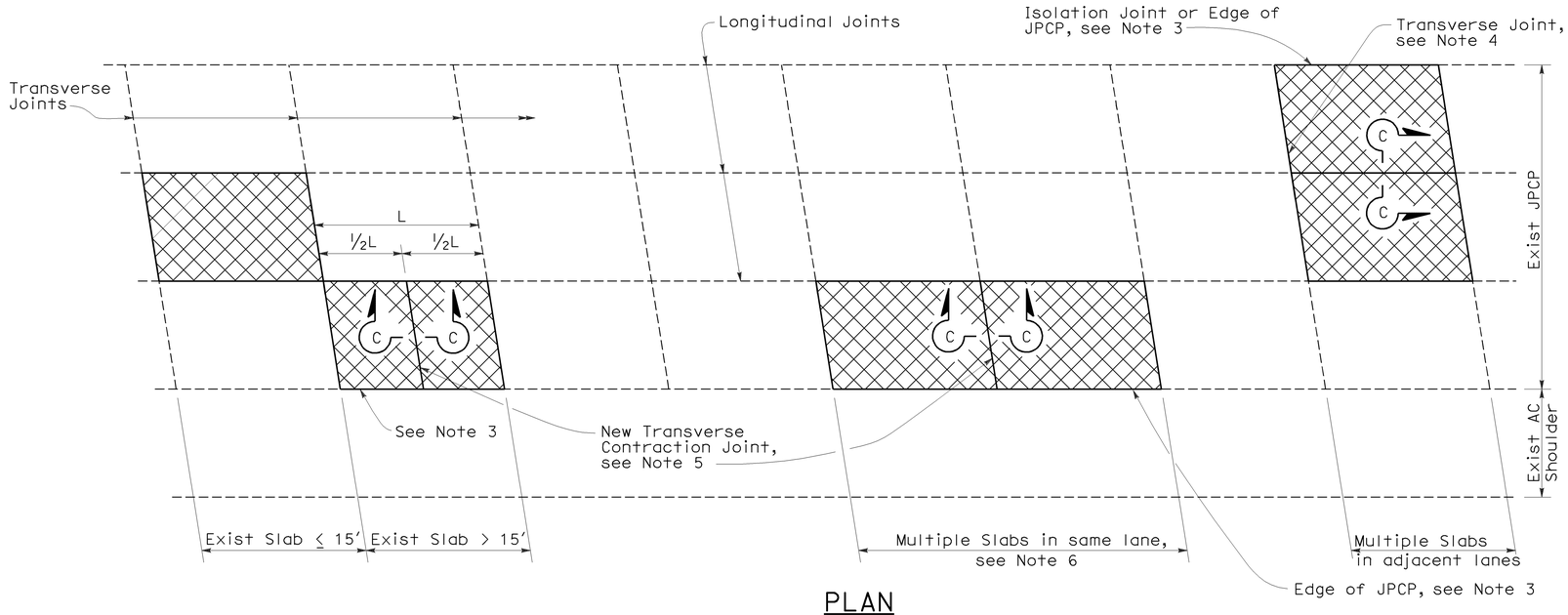


PLAN

## NOTES:

1. For details not shown, see Revised Standard Plan RSP P10.
2. Where the existing outer shoulder pavement is asphalt concrete pavement, the "a" dimension shall be 1′-0" and the "b" dimension shall be 2′-0".
3. Side forms shall be used where edge of pavement is adjacent to asphalt concrete.
4. For detail, see Transverse Construction Joint for existing concrete pavement detail on Revised Standard Plan RSP P10.
5. Transverse joint to match skew of existing joint. Omit dowel bars.
6. This Standard Plan only applicable when replacing multiple slabs in the same lane is less than 100′.

## LEGEND

Replace Concrete Pavement (See Slab Layout Detail)

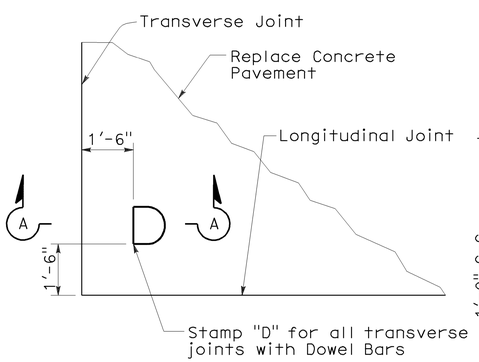


DOWEL STAMP DETAIL

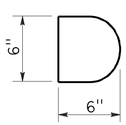


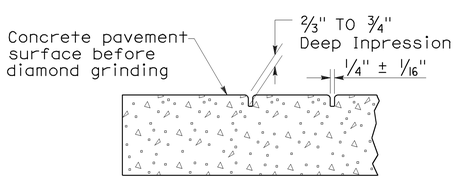


SECTION A-A

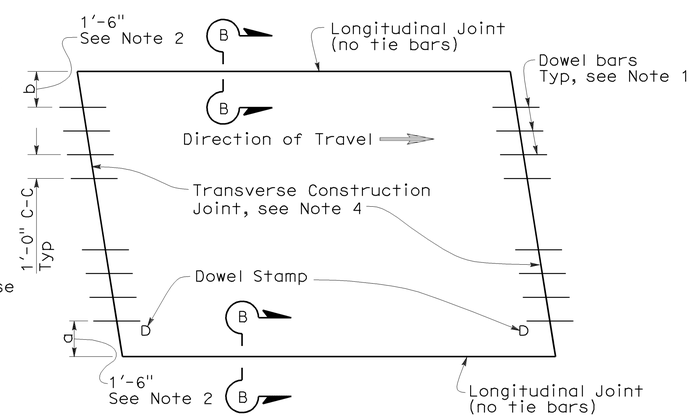


TYPE I
(traffic lane lines match longitudinal joints)

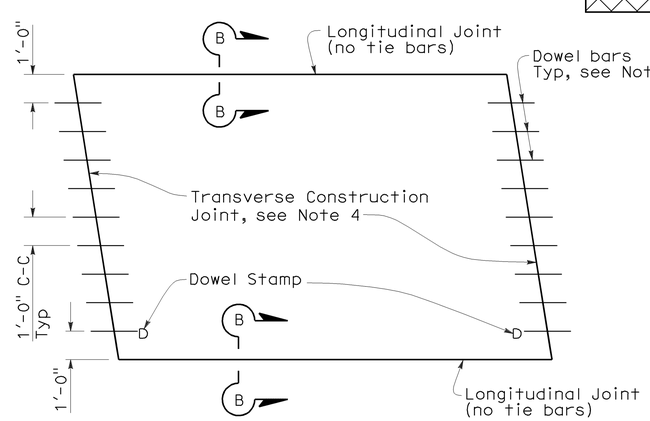


TYPE II
(traffic lane lines do not match longitudinal joints)

SLAB LAYOUT

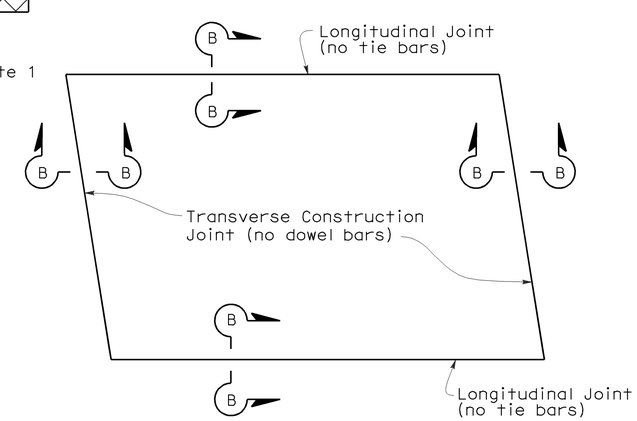


TYPE III
(for short term repairs < 5 yrs design life or for slab replacements with a cracking and seating operation)

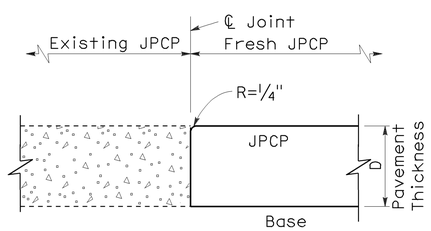


SECTION B-B

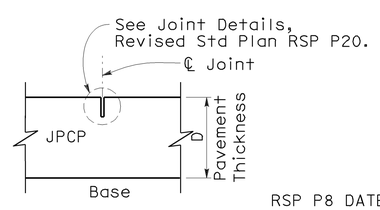


SECTION C-C

STATE OF CALIFORNIA
DEPARTMENT OF TRANSPORTATION

# JOINTED PLAIN CONCRETE PAVEMENT-INDIVIDUAL SLAB REPLACEMENT

NO SCALE

RSP P8 DATED MAY 15, 2009 SUPERSEDES RSP P8 DATED SEPTEMBER 1, 2006 AND STANDARD PLAN P8 DATED MAY 1, 2006 - PAGE 123 OF THE STANDARD PLANS BOOK DATED MAY 2006.

**REVISED STANDARD PLAN RSP P8**

**2006 REVISED STANDARD PLAN RSP P8**



5-8-09

| DIST | COUNTY | ROUTE | POST MILES TOTAL PROJECT | SHEET NO. | TOTAL SHEETS |
|---|---|---|---|---|---|
| 04 | Sol | 80 | 30.6/38.7 | 209 | 231 |

William K. Farnbach
REGISTERED CIVIL ENGINEER

May 15, 2009
PLANS APPROVAL DATE

REGISTERED PROFESSIONAL ENGINEER William K. Farnbach No. C49042 Exp. 9-30-10 CIVIL STATE OF CALIFORNIA

*The State of California or its officers or agents shall not be responsible for the accuracy or completeness of electronic copies of this plan sheet.*

*To accompany plans dated* 12-27-11

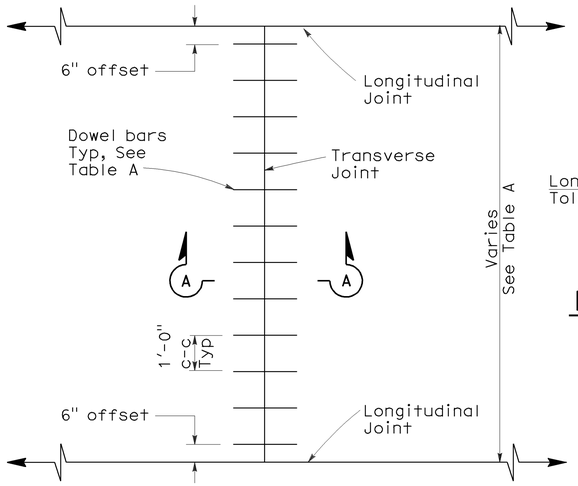


TRANSVERSE JOINT DOWEL BAR LAYOUT

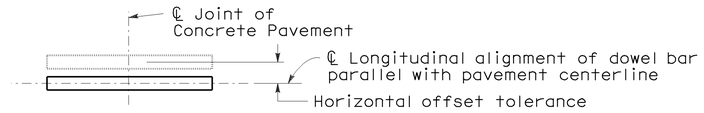


PLAN

HORIZONTAL OFFSET TOLERANCE

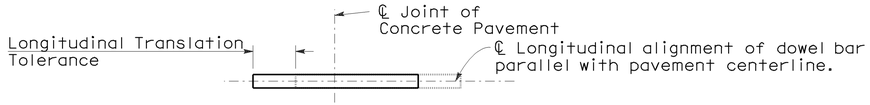


PLAN

LONGITUDINAL TRANSLATION TOLERANCE

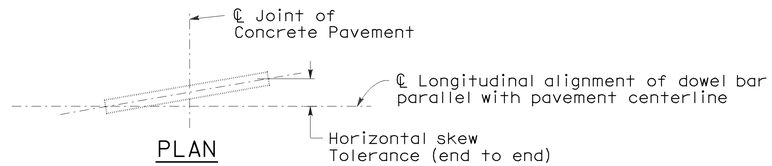


PLAN

HORIZONTAL SKEW TOLERANCE

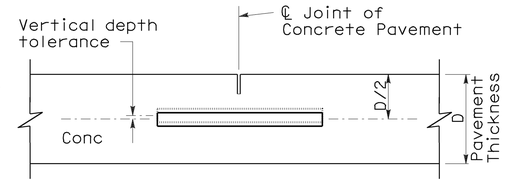


ELEVATION

VERTICAL DEPTH TOLERANCE

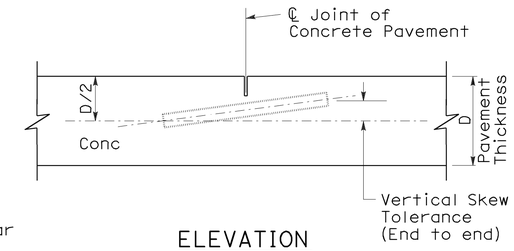


ELEVATION

VERTICAL SKEW TOLERANCE

## NOTES:

1. See Revised Standard Plan RSP P1 for typical dowel bar placement and locations.
2. 1½" Dia smooth dowel bars are to be used with a pavement thickness, D, equal to or greater than 0.70 feet. For pavement thickness, D, less than 0.70 feet, use 1¼" Dia smooth dowel bars.
3. For widths not shown, see Project Plans.
4. If fresh concrete pavement is placed adjacent to existing concrete pavement, the top corner of the existing concrete pavement does not need to be rounded to the ¼" radius, as shown.

TABLE A (See Note 3)

| Dowel Bar Transverse Spacing Table | |
|---|---|
| Width between Longitudinal Joints | Number of Dowels between Longitudinal Joints |
| 14'-0" | 14 |
| 13'-0" | 13 |
| 12'-0" | 12 |
| 11'-0" | 11 |
| 10'-0" | 10 |
| 8'-0" | 8 |
| 5'-0" | 5 |
| 4'-0" | 4 |

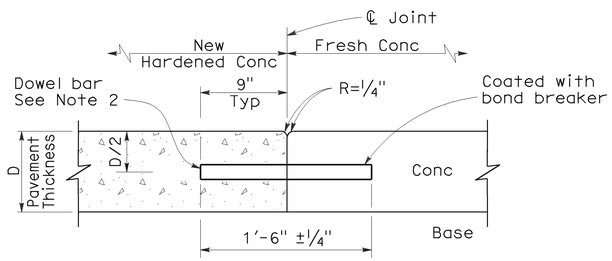


SECTION A-A

TRANSVERSE CONSTRUCTION JOINT DETAIL

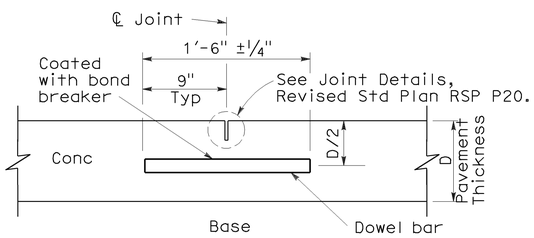


TRANSVERSE CONTRACTION JOINT

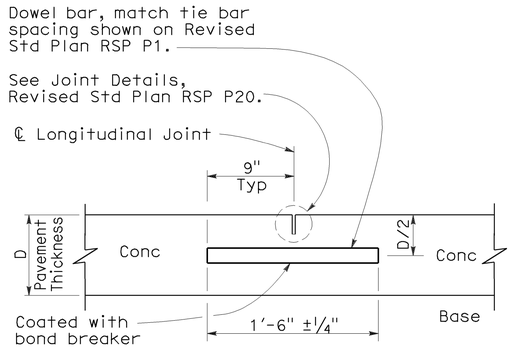


LONGITUDINAL CONTRACTION JOINT WITH DOWEL BARS

(See Revised Std Plan RSP P18)

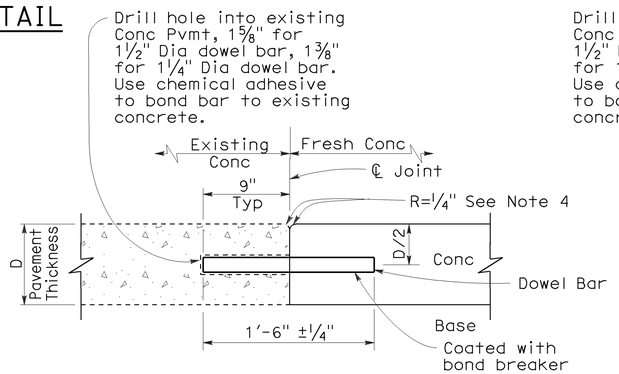


TRANSVERSE CONSTRUCTION JOINT FOR EXISTING CONCRETE PAVEMENT

(Drill and bond locations)

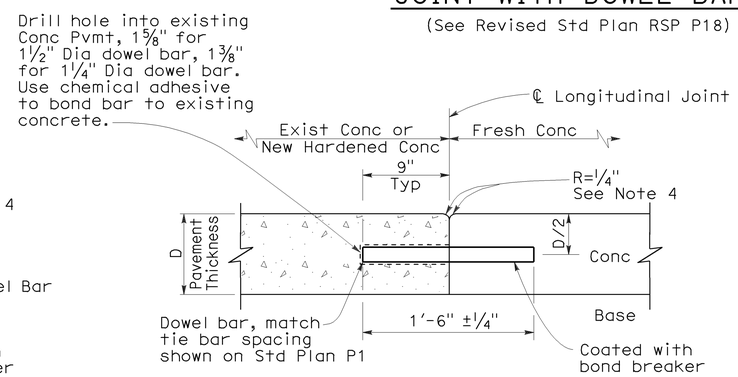


LONGITUDINAL CONSTRUCTION JOINT WITH DOWEL BARS

(See Revised Std Plan RSP P18)

STATE OF CALIFORNIA
DEPARTMENT OF TRANSPORTATION

# CONCRETE PAVEMENT-DOWEL BAR DETAILS

NO SCALE

RSP P10 DATED MAY 15, 2009 SUPERSEDES STANDARD PLAN P10 DATED MAY 1, 2006 - PAGE 124 OF THE STANDARD PLANS BOOK DATED MAY 2006.

**REVISED STANDARD PLAN RSP P10**

**2006 REVISED STANDARD PLAN RSP P10**

5-8-09

| DIST | COUNTY | ROUTE | POST MILES TOTAL PROJECT | SHEET NO. | TOTAL SHEETS |
|---|---|---|---|---|---|
| 04 | Sol | 80 | 30.6/38.7 | 210 | 231 |

William K. Farnbach
REGISTERED CIVIL ENGINEER

June 5, 2009
PLANS APPROVAL DATE

REGISTERED PROFESSIONAL ENGINEER William K. Farnbach No. C49042 Exp. 9-30-10 CIVIL STATE OF CALIFORNIA

*The State of California or its officers or agents shall not be responsible for the accuracy or completeness of electronic copies of this plan sheet.*

*To accompany plans dated* 12-27-11

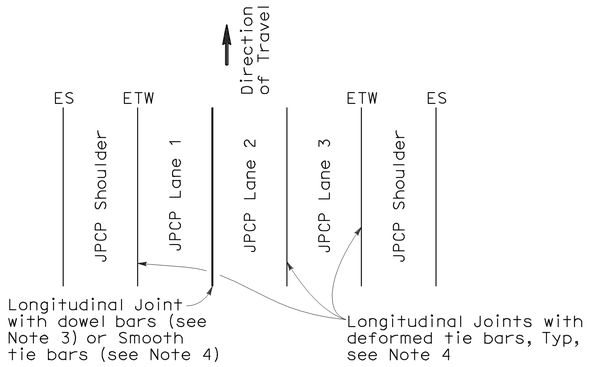


3 LANES WITH TIED CONCRETE SHOULDERS
PLAN

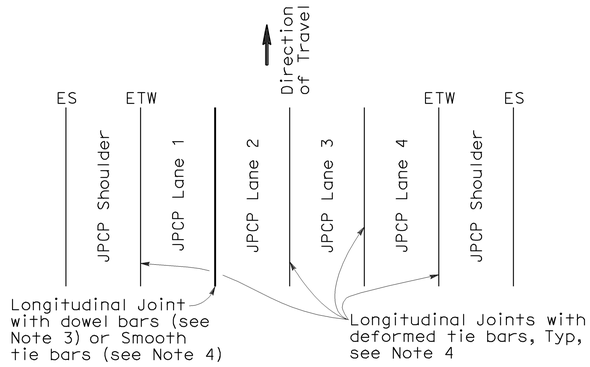


4 LANES WITH TIED CONCRETE SHOULDERS
PLAN

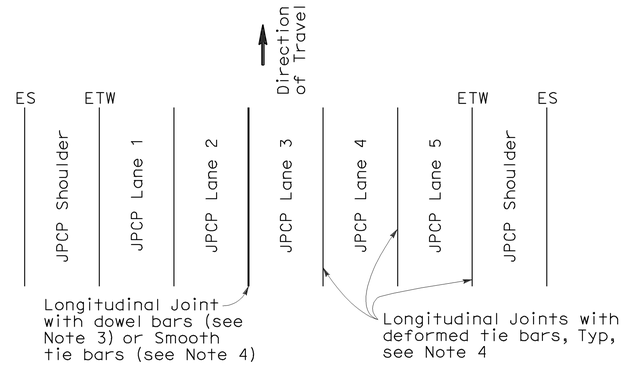


5 LANES WITH TIED CONCRETE SHOULDERS
PLAN

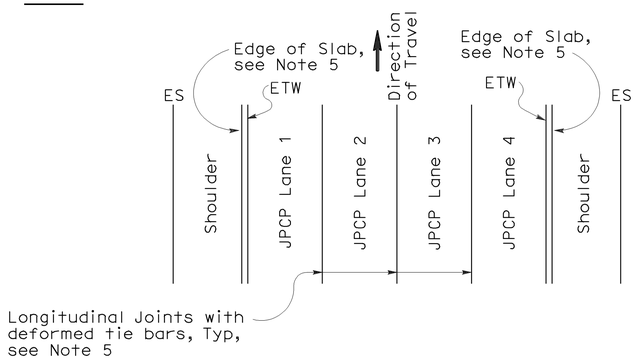


4 LANES OR LESS WITH WIDENED SLAB
PLAN

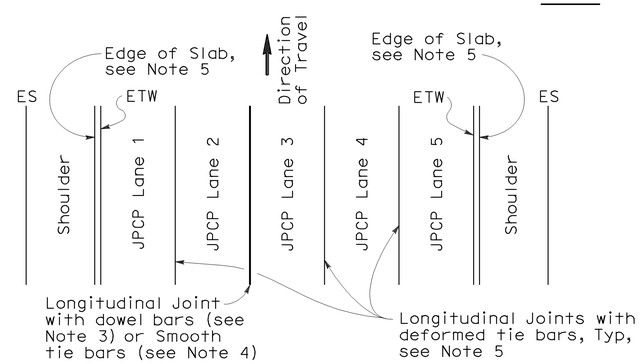


5 LANES WITH WIDENED SLAB
PLAN

## NEW CONSTRUCTION

Location of Longitudinal Joints
(For JPCP)

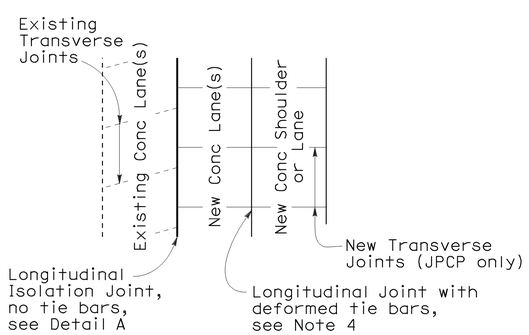


CASE 1
PLAN

Transverse Joints do not align between new and existing

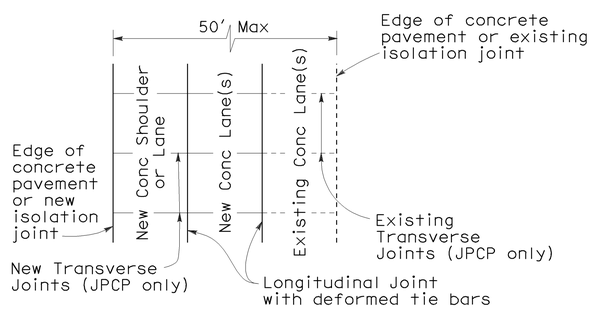


CASE 2
PLAN

Transverse Joints align between new and existing

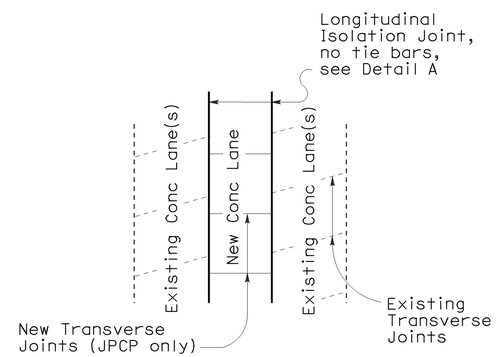


CASE 3 (INTERIOR LANE REPLACEMENT)
PLAN

Transverse Joints do not align between new and existing

## LANE/SHOULDER ADDITION OR RECONSTRUCTION

(For JPCP and CRCP)

NOTES:

1. Where Lean Concrete Base is not used as base material, the joint filler material used for the longitudinal isolation joint shall only extend to the bottom of the new concrete slab. See Detail A.
2. Use 5/8" ±1/16" dimension for silicone sealant.
3. See Revised Standard Plan RSP P10 for longitudinal joint with dowel bars.
4. See Revised Standard Plan RSP P1.
5. See Revised Standard Plan RSP P2.

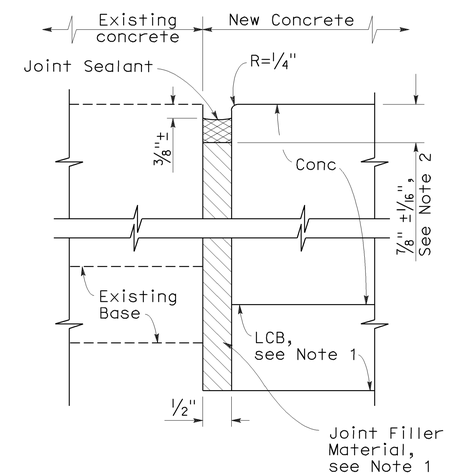


DETAIL A

ISOLATION JOINT

STATE OF CALIFORNIA
DEPARTMENT OF TRANSPORTATION

# CONCRETE PAVEMENT-LANE SCHEMATICS AND ISOLATION JOINT DETAIL

NO SCALE

RSP P18 DATED JUNE 5, 2009 SUPERSEDES RSP P18 DATED MAY 15, 2009, RSP P18 DATED NOVEMBER 17, 2006 AND STANDARD PLAN P18 DATED MAY 1, 2006 - PAGE 127 OF THE STANDARD PLANS BOOK DATED MAY 2006.

**REVISED STANDARD PLAN RSP P18**

**2006 REVISED STANDARD PLAN RSP P18**

5-14-09

NOTE:

1. Tie bars, dowel bars, and reinforcement are not shown in joint seal details, see Revised Standard Plans RSP P1, RSP P3, RSP P10, RSP P35, RSP P45, or RSP P46 as applicable.

| DIST | COUNTY | ROUTE | POST MILES TOTAL PROJECT | SHEET NO. | TOTAL SHEETS |
|---|---|---|---|---|---|
| 04 | Sol | 80 | 30.6/38.7 | 211 | 231 |

William K. Farnbach
REGISTERED CIVIL ENGINEER

May 15, 2009
PLANS APPROVAL DATE

REGISTERED PROFESSIONAL ENGINEER William K. Farnbach No. C49042 Exp. 9-30-10 CIVIL STATE OF CALIFORNIA

*The State of California or its officers or agents shall not be responsible for the accuracy or completeness of electronic copies of this plan sheet.*

*To accompany plans dated* 12-27-11

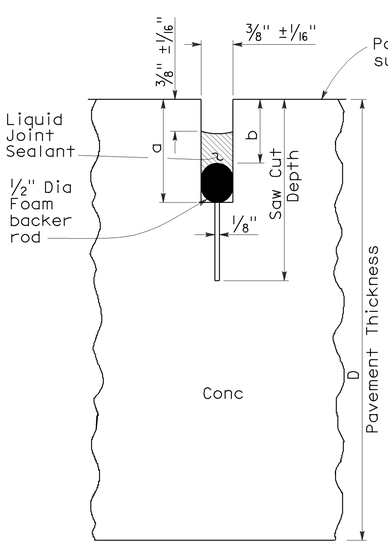


LIQUID SEALANT

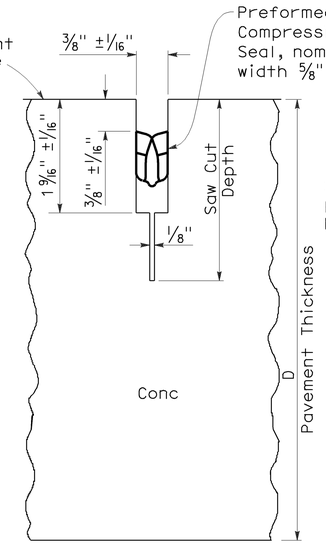


COMPRESSION SEAL

## TYPE A1

Transverse Contraction Joints

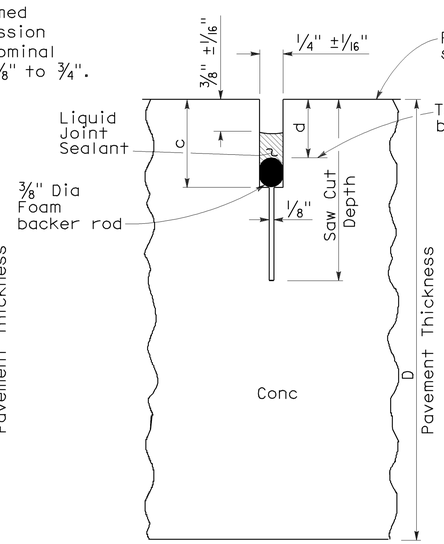


LIQUID SEALANT

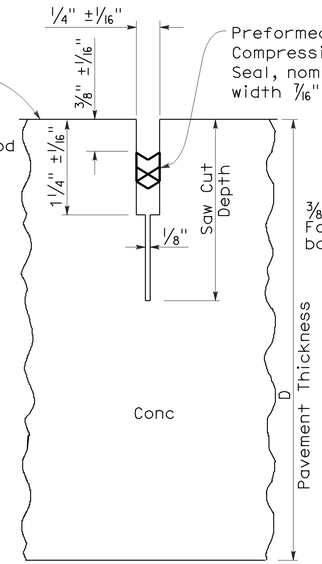


COMPRESSION SEAL

## TYPE A2

Longitudinal Contraction Joints

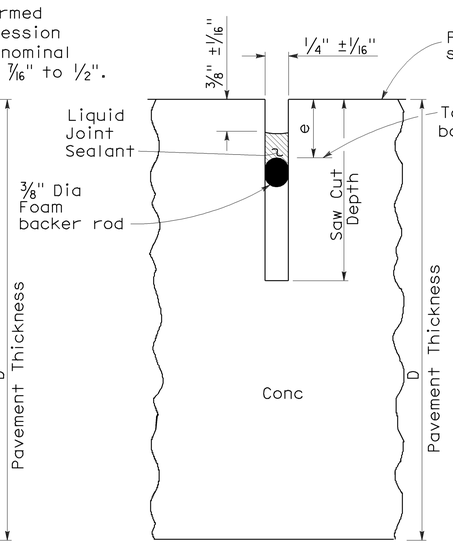


LIQUID SEALANT

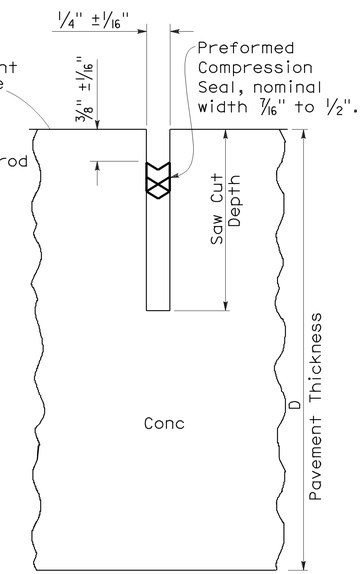


COMPRESSION SEAL

## TYPE B

Longitudinal or Transverse Contraction Joint

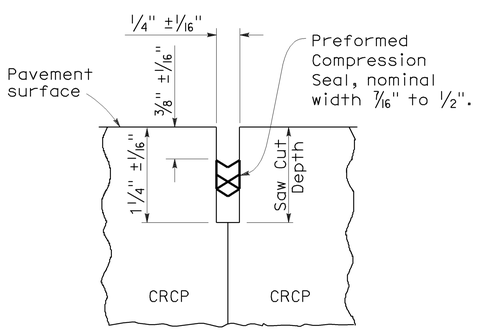


COMPRESSION SEAL

## TYPE C

Transverse and Longitudinal Construction Joints (For CRCP)

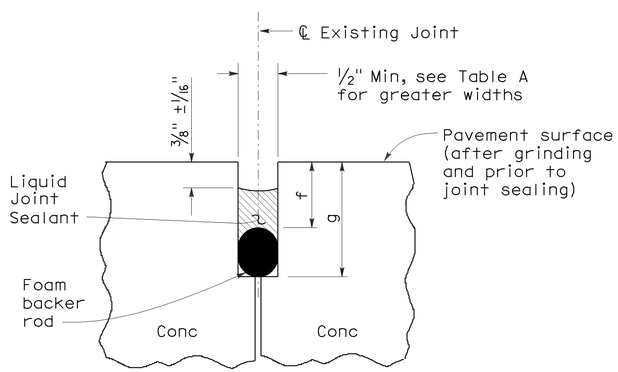


LIQUID SEALANT

## TYPE R

Retrofit Transverse and Longitudinal Joints

### LIQUID SEALANT RESERVOIR DEPTH

| LIQUID SEALANT MATERIAL | 3/8" Joint Width Type A1 | | 1/4" Joint Width Type A2 | | 1/4" Joint Width Type B |
|---|---|---|---|---|---|
| | DIMENSION | | DIMENSION | | DIMENSION |
| | a | b | c | d | e |
| SILCONE | 1" ±1/16" | 5/8" ±1/16" | 15/16" ±1/16" | 9/16" ±1/16" | 9/16" ±1/16" |
| ASPHALT RUBBER | 1 3/16" ±1/16" | 3/4" ±1/16" | 1 1/16" ±1/16" | 11/16" ±1/16" | 11/16" ±1/16" |

### TABLE A (TYPE R JOINT)

| Sawn Joint Width | Backer Rod Diameter ± 1/16" | DIMENSION "f" | DIMENSION "g" |
|---|---|---|---|
| 1" | 1 5/16" | 7/8" | 2 1/4" |
| 7/8" | 1 3/16" | 13/16" | 2" |
| 3/4" | 1" | 3/4" | 1 3/4" |
| 5/8" | 7/8" | 11/16" | 1 1/2" |
| 1/2" | 11/16" | 5/8" | 1 1/4" |

STATE OF CALIFORNIA
DEPARTMENT OF TRANSPORTATION

# CONCRETE PAVEMENT-JOINT DETAILS

NO SCALE

RSP P20 DATED MAY 15, 2009 SUPERSEDES STANDARD PLAN P20 DATED MAY 1, 2006 - PAGE 128 OF THE STANDARD PLANS BOOK DATED MAY 2006.

**REVISED STANDARD PLAN RSP P20**

**2006 REVISED STANDARD PLAN RSP P20**



5-8-09

| DIST | COUNTY | ROUTE | POST MILES TOTAL PROJECT | SHEET NO. | TOTAL SHEETS |
|---|---|---|---|---|---|
| 04 | Sol | 80 | 30.6/38.7 | 212 | 231 |

Raymond Don Tsztoo
REGISTERED CIVIL ENGINEER

January 18, 2008
PLANS APPROVAL DATE

REGISTERED PROFESSIONAL ENGINEER
Raymond Don Tsztoo
No. C37332
Exp. 6-30-08
CIVIL
STATE OF CALIFORNIA

*The State of California or its officers or agents shall not be responsible for the accuracy or completeness of electronic copies of this plan sheet.*

*To accompany plans dated* 12-27-11

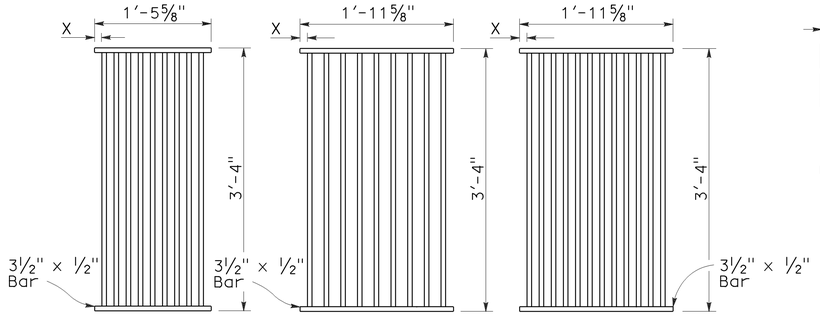


TYPE 18-9

1⅜" Clear spacing. Use within the roadbed on highways where bicycles and pedestrians are excluded.

TYPE 24-9

2" Clear spacing. Use in locations off the roadbed on all types of highways.

TYPE 24-12

1⅜" Clear spacing. Use within the roadbed on highways where bicycles and pedestrians are excluded.

## RECTANGULAR GRATE DETAILS

(See table below)

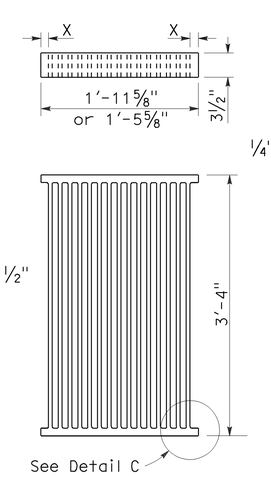


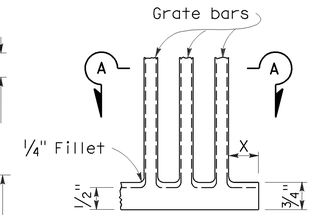


DETAIL C

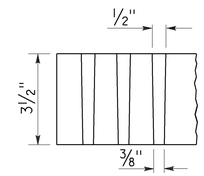


SECTION A-A

## ALTERNATIVE CAST NODULAR IRON GRATE OR CAST STEEL GRATE

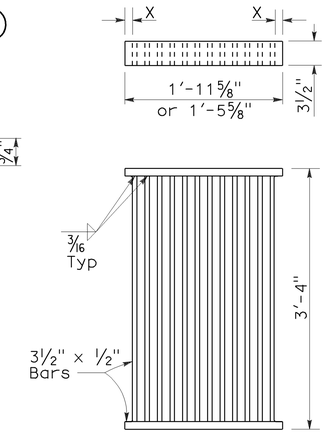


## ALTERNATIVE WELDED GRATE

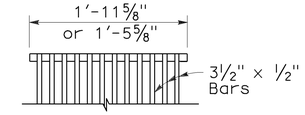


CAST END BLOCK

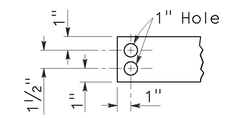


END OF BAR

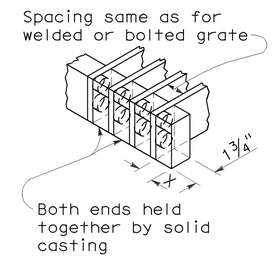


## ALTERNATIVE CAST NODULAR IRON OR CAST STEEL END BLOCK GRATE

## NOTES:

1. Grate type numbers refer to approximate width of grate in inches and number of bars, respectively.
2. Contractor has the option of using cast nodular iron, cast steel, welded, bolted, or cast end block grate.
3. See Special Provisions for requirements pertaining to galvanizing or asphalt dipping of grates and frames.
4. Rounded top of bars optional on all grates.
5. Pipe inlets with a grate shall be placed so that bars parallel direction of principle surface flow.
6. Full penetration butt welds may be substituted for the fillet welds on all anchors.
7. Standard square, hexagon, round or equivalent headed anchors may be substituted for the right angle hooks on the anchors shown on this plan.
8. Grate and frame weights are based on welded grates (weights of face angles, steps, protection bars, etc. are not included).

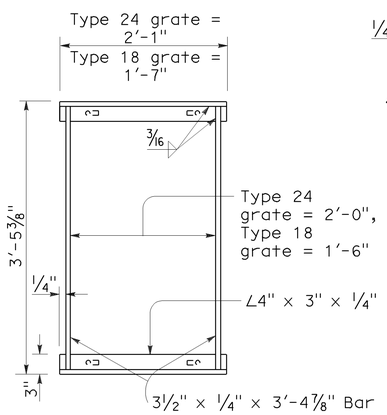


TYPICAL FRAME

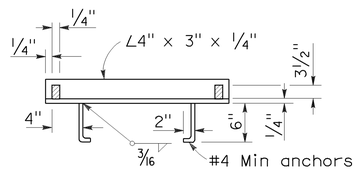


CROSS SECTION

(Thru frame)

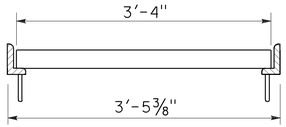


LONGITUDINAL SECTION

(Thru frame and grate)

## RECTANGULAR FRAME DETAILS

(For all rectangular grates)

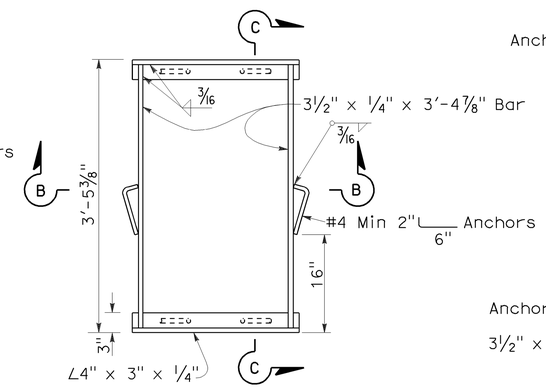


TYPICAL FRAME

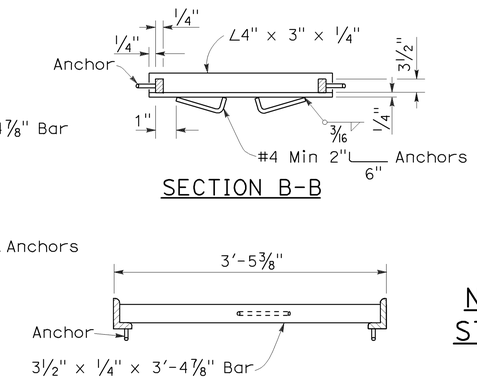


SECTION B-B

SECTION C-C

## ALTERNATIVE ANCHOR FOR RECTANGULAR FRAME

(For details not shown, See Rectangular Frame Details)

| INLET TYPE | GRATE TYPE | No. OF GRATES | WEIGHT LB |
|---|---|---|---|
| GDO | 24-12 | 2 | 634 |
| | | | |
| GOL-7 | 24-12 | 1 | 326 |
| | | | |
| GOL-10 | 24-12 | 1 | 326 |
| | | | |
| GO,G1,G2,G3,G4 (TYPE 24) | 24-9 | 1 | 263 |
| | 24-12 | 1 | 326 |
| | | | |
| G4 (TYPE 18),G5,G6 | 18-9 | 1 | 249 |
| GT1 | 18-9 | 2 | 498 |
| GT2 | 18-9 | 2 | 498 |
| GT3 | 24-12 | 2 | 652 |
| | | | |
| GT4 | 24-12 | 2 | 652 |
| | | | |
| TRASH RACK | | | 22 |

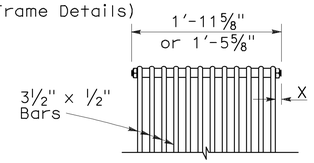


BOLTED END BLOCK

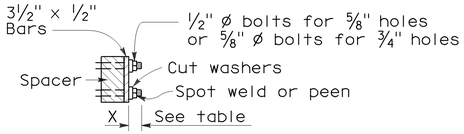


BOLTING DETAIL

## ALTERNATIVE BOLTED GRATE

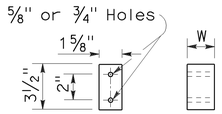


BAR SPACER

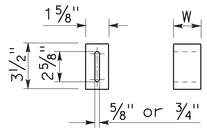


ALTERNATIVE SPACER

W = 1⅜" or 2"

## GRATE BAR SPACING TABLE

| TYPE | No. OF BARS | CLEAR BAR SPACING | X |
|---|---|---|---|
| 18-9 | 9 | 1⅜" | 1 1/16" |
| 24-9 | 9 | 2" | 1 9/16" |
| 24-12 | 12 | 1⅜" | 1¼" |

| INLET TYPE | COVER TYPE | WEIGHT LB |
|---|---|---|
| OS | PLATE | 174 |
| OL-7 | PLATE | 170 |
| OL-10 | PLATE | 170 |
| OL-14 | PLATE | 170 |
| OL-21 | PLATE | 170 |
| OCP | PLATE | 112 |
| OCPI | PLATE | 112 |
| OCPI | REDWOOD | 42 |
| OMP | PLATE | 177 |
| OMPI | PLATE | 177 |

## BASIS FOR MISC IRON & STEEL FINAL PAY WEIGHTS FOR DRAINAGE INLETS

(See General Notes, No 8)

STATE OF CALIFORNIA
DEPARTMENT OF TRANSPORTATION

# GRATE DETAILS

NO SCALE

RSP D77A DATED JANUARY 18, 2008 SUPERSEDES STANDARD PLAN D77A DATED MAY 1, 2006 - PAGE 155 OF THE STANDARD PLANS BOOK DATED MAY 2006.

**REVISED STANDARD PLAN RSP D77A**

**2006 REVISED STANDARD PLAN RSP D77A**

12-14-07

| DIST | COUNTY | ROUTE | POST MILES TOTAL PROJECT | SHEET NO. | TOTAL SHEETS |
|---|---|---|---|---|---|
| 04 | Sol | 80 | 30.6/38.7 | 213 | 231 |

Raymond Don Tsztoo
REGISTERED CIVIL ENGINEER

March 7, 2008
PLANS APPROVAL DATE

REGISTERED PROFESSIONAL ENGINEER
Raymond Don Tsztoo
No. C37332
Exp. 6-30-08
CIVIL
STATE OF CALIFORNIA

*The State of California or its officers or agents shall not be responsible for the accuracy or completeness of electronic copies of this plan sheet.*

*To accompany plans dated* 12-27-11

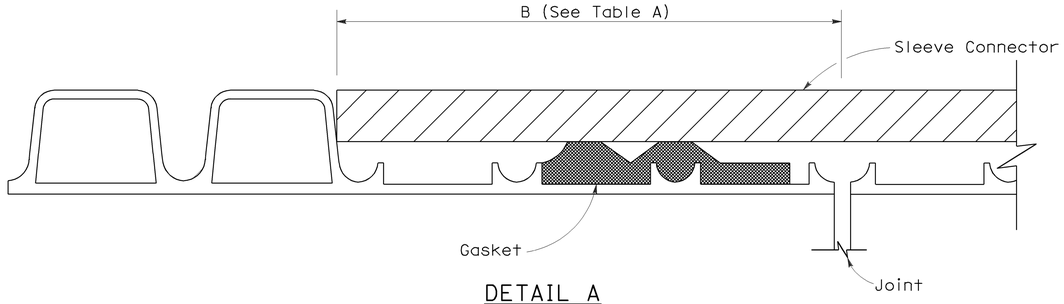


DETAIL A

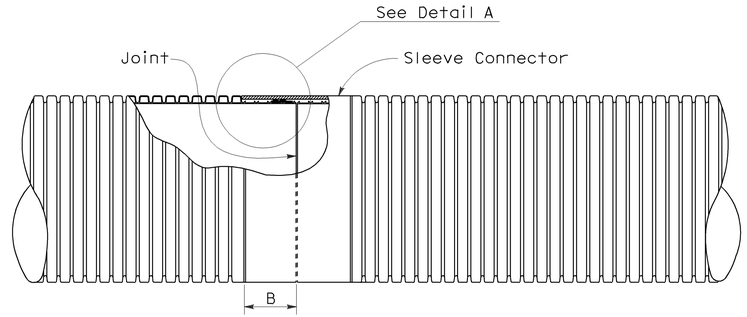


PLAN VIEW
Liner Insert
See Note 4

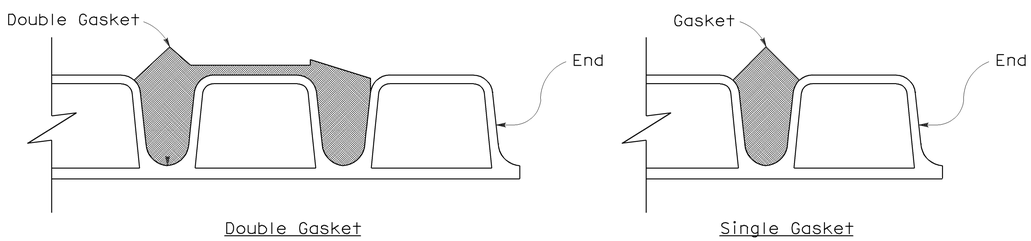


DETAIL B

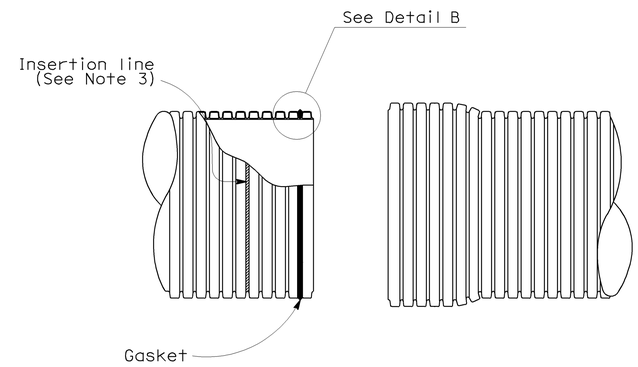


SPIGOT BELL

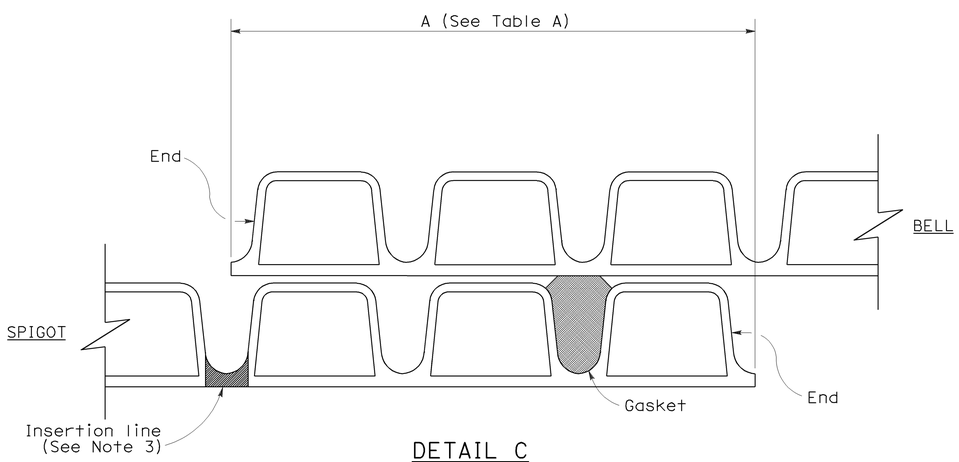


DETAIL C
(Single gasket shown)

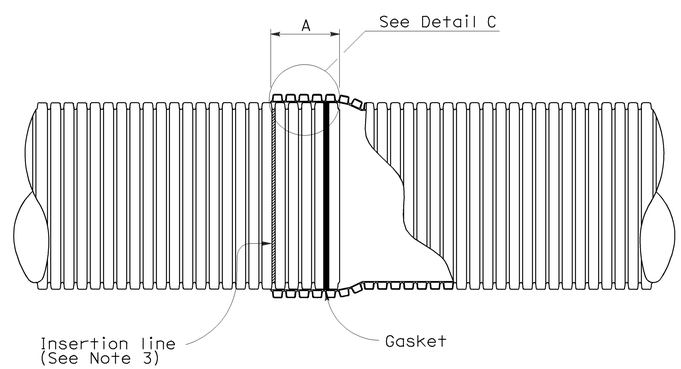


BELL AND SPIGOT JOINT

## NOTES:

1. For pipe sections installed on straight alignment, the pipe sections shall be joined to achieve maxium joint overlap at all points on the periphery as indicated in Table A where the plans call for positive or watertight joints. Maxium joint overlap is recommended where the plans call for standard joints, but in no case shall the joint overlap be less than 3½".
2. For pipe sections installed on curved alignment, the maxium angle of deflection from straight alignment at any joint shall not exceed two degrees. Where the plans call for watertightness, field testing for compliance is required. Where plans call for positive joints, the pipe sections shall be joined to achieve Table A Dimensions on one side of the joint. Joints classified as standard shall have no less than 3½" joint overlap at any point on the periphery.
3. Factory applied insertion line limit shall be placed on spigot.
4. Liner insert to be used inside of existing pipe.

## TABLE A

| JOINT OVERLAP DIMENSIONS | | |
|---|---|---|
| PIPE Dia (NOMINAL) | A | B |
| 12" | 5¾" | 4¼" |
| 15" | 6¾" | 5⅝" |
| 18" | 6¾" | 5⅝" |
| 21" | 8½" | 5⅝" |
| 24" | 8½" | 6⅛" |
| 30" | 8½" | 7⅛" |
| 36" | 8½" | 8⅛" |

STATE OF CALIFORNIA
DEPARTMENT OF TRANSPORTATION

# CORRUGATED POLYVINYL CHLORIDE PIPE WITH SMOOTH INTERIOR STANDARD AND POSITIVE JOINTS

NO SCALE

NSP D97I DATED MARCH 7, 2008 SUPPLEMENTS THE STANDARD PLANS BOOK DATED MAY 2006.

**NEW STANDARD PLAN NSP D97I**

**2006 NEW STANDARD PLAN NSP D97I**

2-13-08

| DIST | COUNTY | ROUTE | POST MILES TOTAL PROJECT | SHEET NO. | TOTAL SHEETS |
|---|---|---|---|---|---|
| 04 | Sol | 80 | 30.6/38.7 | 214 | 231 |

LICENSED LANDSCAPE ARCHITECT

April 3, 2009
PLANS APPROVAL DATE

LICENSED LANDSCAPE ARCHITECT
Gregory A. Balzer 2576
02-28-11
Renewal Date
03-04-09
Date
STATE OF CALIFORNIA

*The State of California or its officers or agents shall not be responsible for the accuracy or completeness of electronic copies of this plan sheet.*

*To accompany plans dated* 12-27-11

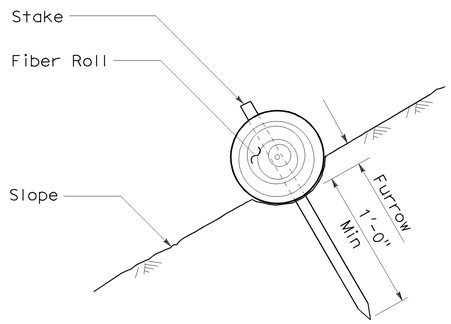


SECTION

FIBER ROLL (TYPE 1)

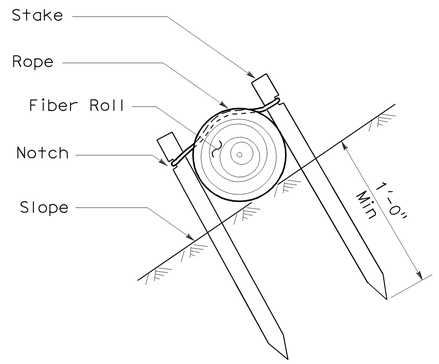


SECTION

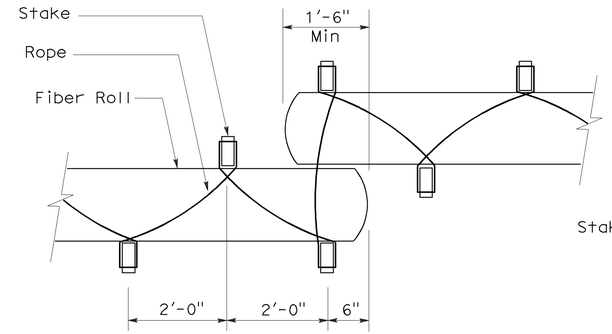


PLAN

FIBER ROLL (TYPE 2)

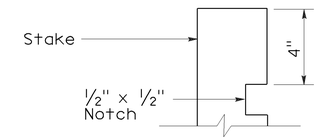


ELEVATION

STAKE NOTCH DETAIL

NOTES:

1. Fiber roll spacing varies depending upon slope inclination.
2. Installations shown in the perspectives are for slope inclination of 10:1 and steeper.

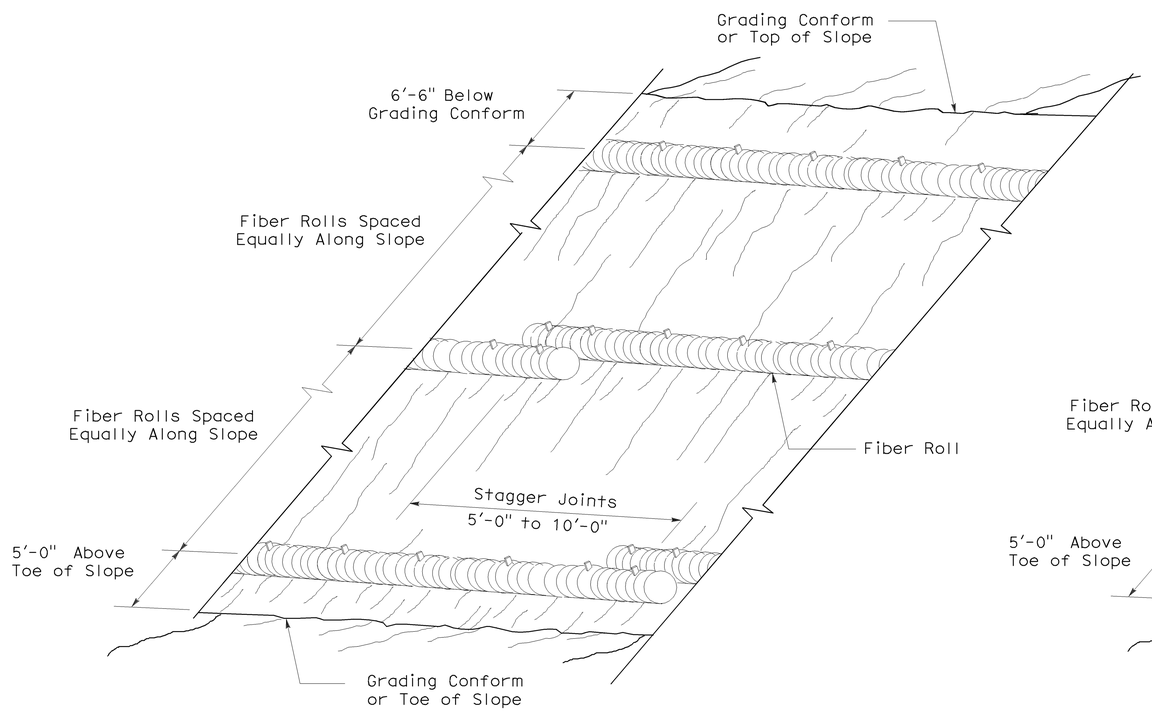


PERSPECTIVE

FIBER ROLL (TYPE 1)

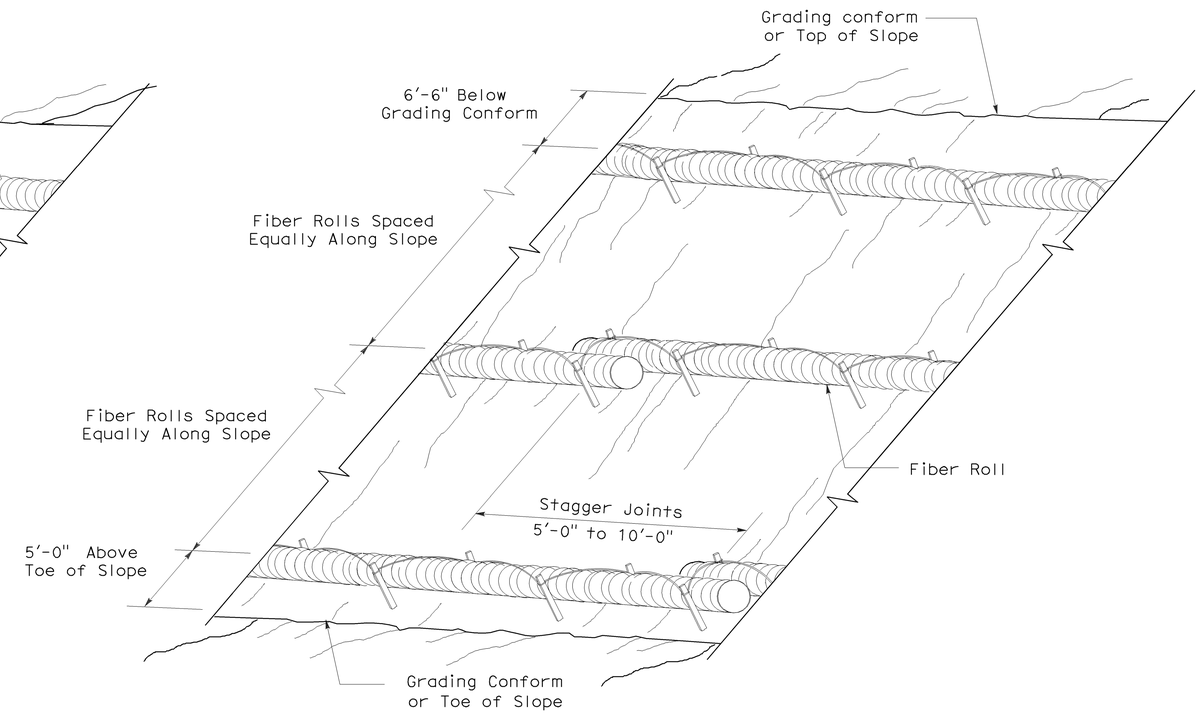


PERSPECTIVE

FIBER ROLL (TYPE 2)

STATE OF CALIFORNIA
DEPARTMENT OF TRANSPORTATION

# EROSION CONTROL DETAILS (FIBER ROLL)

NO SCALE

RNSP H51 DATED APRIL 3, 2009 SUPERSEDES NSP H51 DATED DECEMBER 1, 2006 THAT SUPPLEMENTS THE STANDARD PLANS BOOK DATED MAY 2006.

**REVISED NEW STANDARD PLAN RNSP H51**

**2006 REVISED NEW STANDARD PLAN RNSP H51**

3-4-09

| DIST | COUNTY | ROUTE | POST MILES TOTAL PROJECT | SHEET NO. | TOTAL SHEETS |
|---|---|---|---|---|---|
| 04 | Sol | 80 | 30.6/38.7 | 215 | 231 |

Randell D. Hiatt
REGISTERED CIVIL ENGINEER

June 6, 2008
PLANS APPROVAL DATE

REGISTERED PROFESSIONAL ENGINEER
Randell D. Hiatt
No. C50200
Exp. 6-30-09
CIVIL
STATE OF CALIFORNIA

*The State of California or its officers or agents shall not be responsible for the accuracy or completeness of electronic copies of this plan sheet.*

*To accompany plans dated* 12-27-11

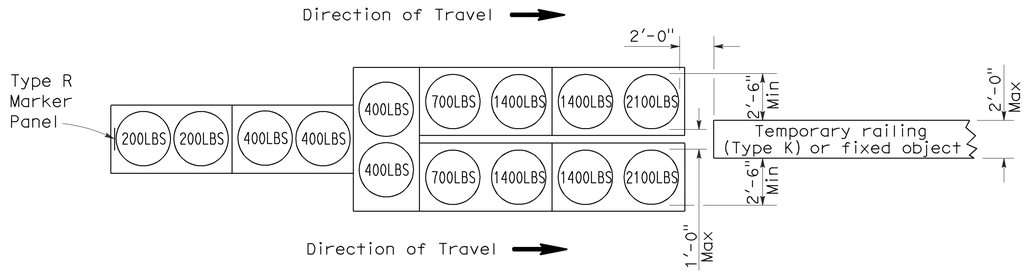


## ARRAY 'TU14'

Approach speed 45 mph or more

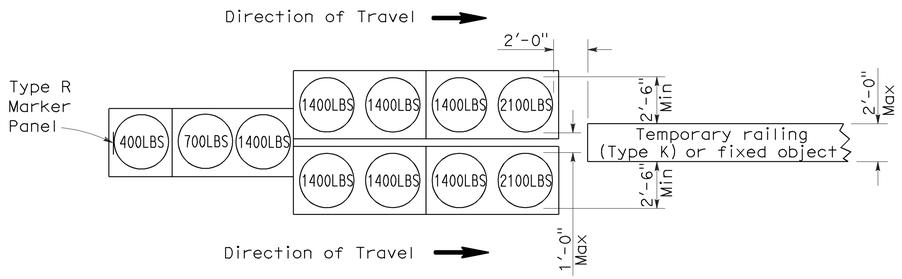


## ARRAY 'TU11'

Approach speed less than 45 mph

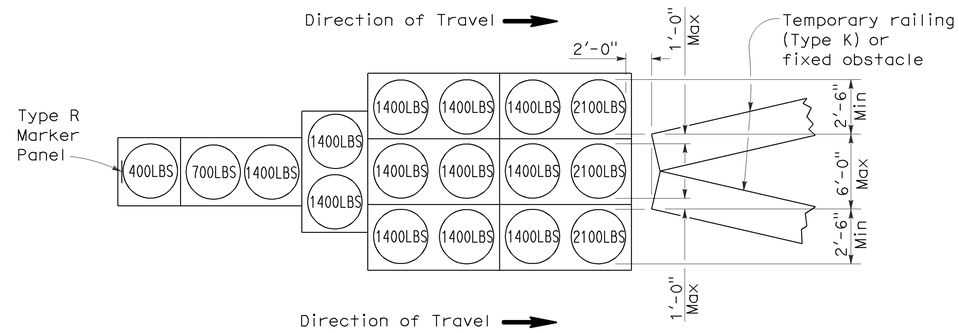


## ARRAY 'TU17'

Approach speed less than 45 mph

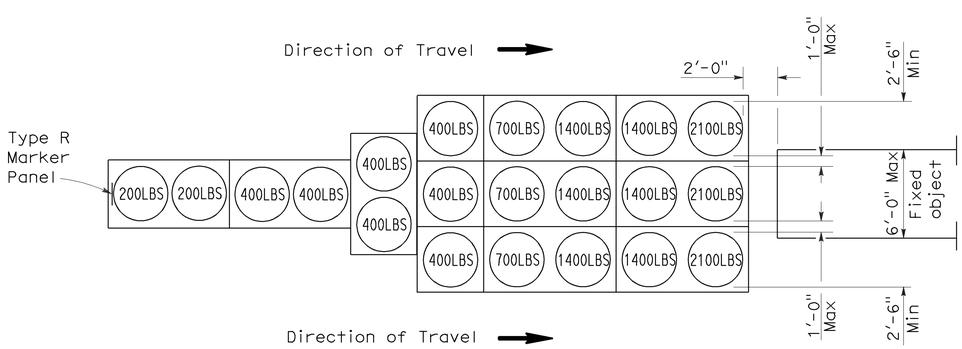


## ARRAY 'TU21'

Approach speed 45 mph or more

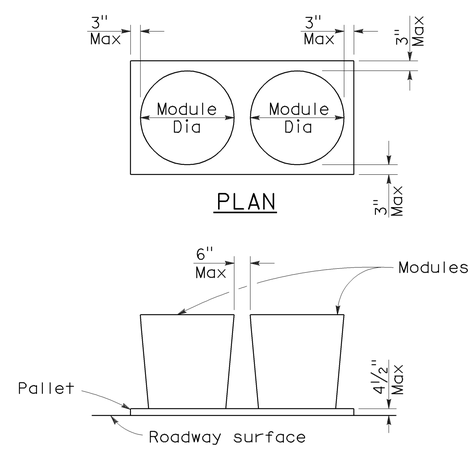


## ELEVATION

## CRASH CUSHION PALLET DETAIL

See Note 7

## NOTES:

1. (XXX) Indicates sand filled module location and weight of sand in pounds for each module. Module spacing is based on the greater diameter of the module.
2. All sand weights are nominal.
3. Temporary crash cushion arrays shall not encroach on the traveled way.
4. Place the top of Type R marker panel 1" below the module lid.
5. Refer to Standard Plan A73B for marker details.
6. Approach speeds indicated conform to NCHRP 350 Report criteria.
7. Use of pallets is optional.

STATE OF CALIFORNIA
DEPARTMENT OF TRANSPORTATION

# TEMPORARY CRASH CUSHION, SAND FILLED (UNIDIRECTIONAL)

NO SCALE

RSP T1A DATED JUNE 6, 2008 SUPERSEDES STANDARD PLAN T1A
DATED MAY 1, 2006 - PAGE 211 OF THE STANDARD PLANS BOOK DATED MAY 2006.

**REVISED STANDARD PLAN RSP T1A**

**2006 REVISED STANDARD PLAN RSP T1A**

5-15-08

| DIST | COUNTY | ROUTE | POST MILES TOTAL PROJECT | SHEET NO. | TOTAL SHEETS |
|---|---|---|---|---|---|
| 04 | Sol | 80 | 30.6/38.7 | 216 | 231 |

Randell D. Hiatt
REGISTERED CIVIL ENGINEER

June 6, 2008
PLANS APPROVAL DATE

REGISTERED PROFESSIONAL ENGINEER
Randell D. Hiatt
No. C50200
Exp. 6-30-09
CIVIL
STATE OF CALIFORNIA

*The State of California or its officers or agents shall not be responsible for the accuracy or completeness of electronic copies of this plan sheet.*

*To accompany plans dated* 12-27-11

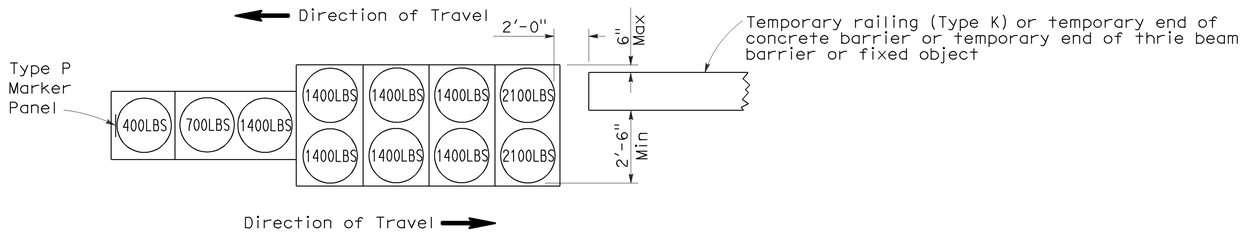


ARRAY 'TB11'

Approach speed less than 45 mph

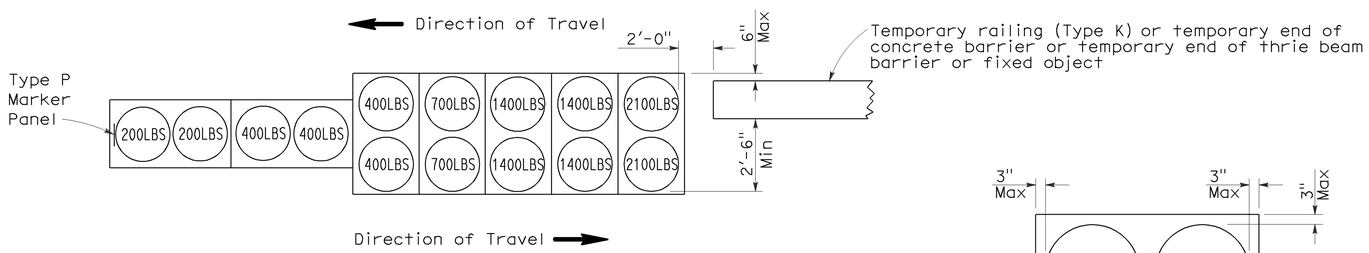


ARRAY 'TB14'

Approach speed 45 mph or more

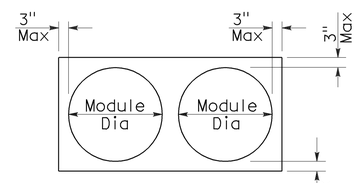


PLAN

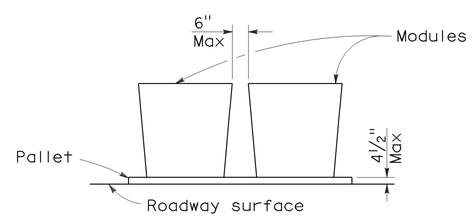


ELEVATION

CRASH CUSHION PALLET DETAIL

See Note 7

NOTES:

1. (XXX) Indicates sand filled module location and weight of sand in pounds for each module. Module spacing is based on the greater diameter of the module.
2. All sand weights are nominal.
3. Temporary crash cushion arrays shall not encroach on the traveled way.
4. Place the Type P marker panel so that the bottom of the panel rests upon the pallet.
5. Refer to Standard Plan A73B for marker details.
6. Approach speeds indicated conform to NCHRP 350 Report criteria.
7. Use of pallets is optional.

STATE OF CALIFORNIA
DEPARTMENT OF TRANSPORTATION

# TEMPORARY CRASH CUSHION, SAND FILLED (BIDIRECTIONAL)

NO SCALE

RSP T1B DATED JUNE 6, 2008 SUPERSEDES STANDARD PLAN T1B
DATED MAY 1, 2006 - PAGE 212 OF THE STANDARD PLANS BOOK DATED MAY 2006.

**REVISED STANDARD PLAN RSP T1B**

**2006 REVISED STANDARD PLAN RSP T1B**

5-15-08

| DIST | COUNTY | ROUTE | POST MILES TOTAL PROJECT | SHEET NO. | TOTAL SHEETS |
|---|---|---|---|---|---|
| 04 | Sol | 80 | 30.6/38.7 | 217 | 231 |

Randell D. Hiatt
REGISTERED CIVIL ENGINEER

June 6, 2008
PLANS APPROVAL DATE

REGISTERED PROFESSIONAL ENGINEER
Randell D. Hiatt
No. C50200
Exp. 6-30-09
CIVIL
STATE OF CALIFORNIA

*The State of California or its officers or agents shall not be responsible for the accuracy or completeness of electronic copies of this plan sheet.*

*To accompany plans dated* 12-27-11

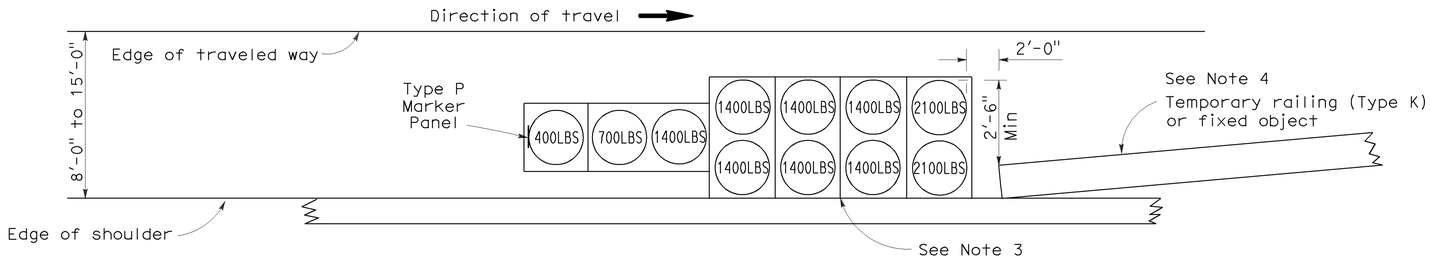


## ARRAY 'TS11'

Approach speed less than 45 mph
See Note 9

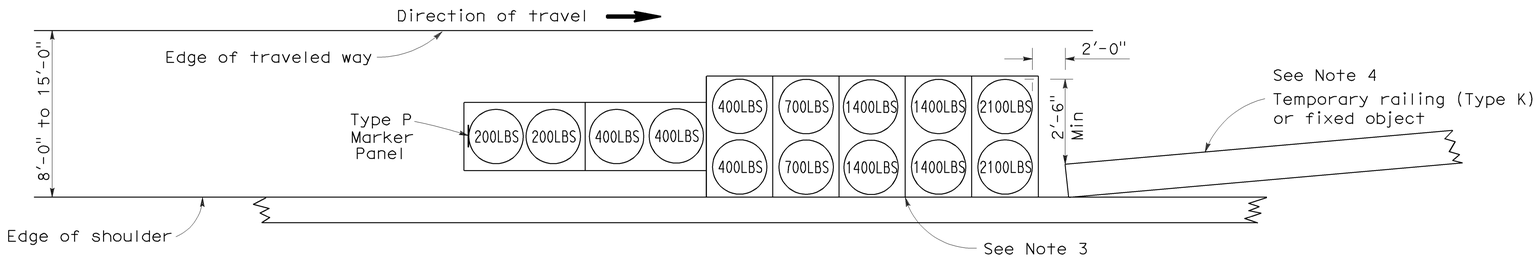


## ARRAY 'TS14'

Approach speed 45 mph or more
See Note 9

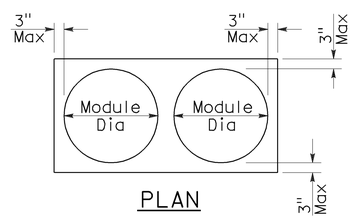


PLAN

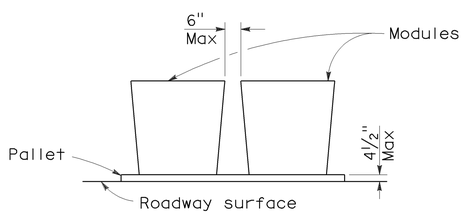


ELEVATION

## CRASH CUSHION PALLET DETAIL

See Note 11

## NOTES:

1. (XXX) Indicates sand filled module location and weight of sand in pounds for each module. Module spacing is based on the greater diameter of the module.
2. All sand weights are nominal.
3. The temporary crash cushion arrays shown on this plan shall be used only in locations where there will be traffic on one side of the temporary crash cushion array.
4. If the fixed object or approach end of the temporary railing is less than 15'-0" from the edge of traveled way, a temporary crash cushion is required in a construction or work zone.
5. Temporary crash cushion arrays shall not encroach on the traveled way.
6. Arrays for median shoulders shall conform to details shown on this plan for outside shoulders.
7. Place the Type P marker panel so that the bottom of the panel rests upon the pallet and faces traffic.
8. Refer to Standard Plan A73B for marker details.
9. For shoulder widths less than 8'-0", appropriate approved crash cushion protection, other than sand filled modules, shall be provided at fixed objects and at approach ends of temporary railing. The specific type of crash cushion shall be as shown on the project plans or as specified in the Special Provisions, or if not shown on the project plans or specified in the Special Provisions, shall be as approved by the Engineer.
10. Approach speeds indicated conform to NCHRP 350 Report criteria.
11. Use of pallets is optional.

STATE OF CALIFORNIA
DEPARTMENT OF TRANSPORTATION

# TEMPORARY CRASH CUSHION, SAND FILLED (SHOULDER INSTALLATIONS)

NO SCALE

RSP T2 DATED JUNE 6, 2008 SUPERSEDES STANDARD PLAN T2
DATED MAY 1, 2006 - PAGE 213 OF THE STANDARD PLANS BOOK DATED MAY 2006.

**REVISED STANDARD PLAN RSP T2**

**2006 REVISED STANDARD PLAN RSP T2**

5-15-08

| Dist | COUNTY | ROUTE | POST MILES TOTAL PROJECT | SHEET No. | TOTAL SHEETS |
|---|---|---|---|---|---|
| 04 | Sol | 80 | 30.6/38.7 | 218 | 231 |

Randell D. Hiatt
REGISTERED CIVIL ENGINEER

May 20, 2011
PLANS APPROVAL DATE

REGISTERED PROFESSIONAL ENGINEER
Randell D. Hiatt
No. C50200
Exp. 6-30-11
CIVIL
STATE OF CALIFORNIA

*The State of California or its officers or agents shall not be responsible for the accuracy or completeness of electronic copies of this plan sheet.*

*To accompany plans dated* 12-27-11

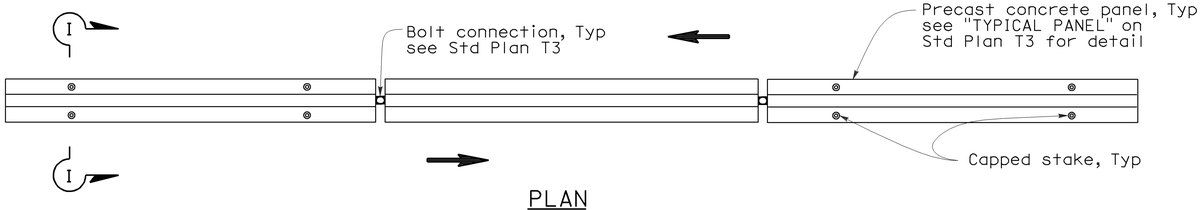


PLAN

RAILING STAKING CONFIGURATION FOR TWO-WAY TRAFFIC

See Note 1

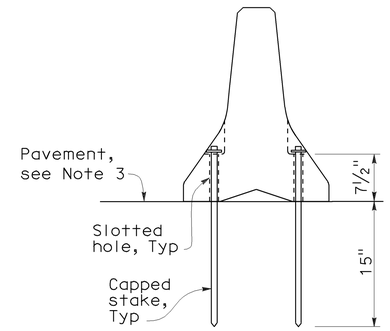


SECTION I-I

NOTES:

1. Where Type K Temporary Railing is placed as a temporary or long term barrier in two-way traffic on highways with less than 24" from the edge of traveled way, use four capped stakes per every other panel with end panels staked.
2. Where Type K Temporary Railing is placed 3" to 24" from the edge of an excavation on highways, use two capped stakes per panel along the traffic side.
3. Staked Type K Temporary Railing must be supported by at least 4" thick concrete, hot mix asphalt or existing asphalt concrete pavement.
4. The minimum yield strength for the washer must be 60,000 psi.
5. Direction of adjacent traffic indicated by ⟹.

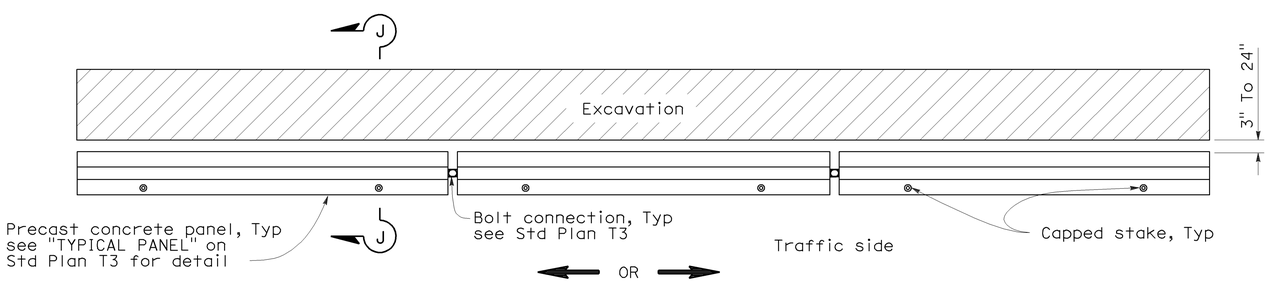


PLAN

RAILING STAKING CONFIGURATION ADJACENT TO AN EXCAVATION

See Note 2

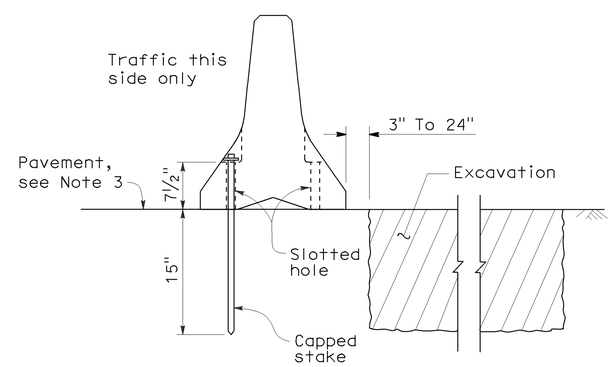


SECTION J-J

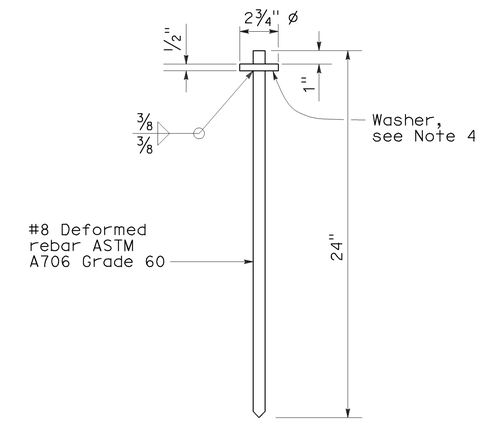


CAPPED STAKE DETAIL

STATE OF CALIFORNIA
DEPARTMENT OF TRANSPORTATION

# TEMPORARY RAILING (TYPE K)

NO SCALE

NSP T3A DATED MAY 20, 2011 SUPPLEMENTS
THE STANDARD PLANS BOOK DATED MAY 2006.

**NEW STANDARD PLAN NSP T3A**

2006 NEW STANDARD PLAN NSP T3A

| DIST | COUNTY | ROUTE | POST MILES TOTAL PROJECT | SHEET NO. | TOTAL SHEETS |
|---|---|---|---|---|---|
| 04 | Sol | 80 | 30.6/38.7 | 219 | 231 |

LICENSED LANDSCAPE ARCHITECT

April 3, 2009
PLANS APPROVAL DATE

LICENSED LANDSCAPE ARCHITECT Robert B. Schott 3635 11-30-10 Renewal Date 2-25-09 Date STATE OF CALIFORNIA

*The State of California or its officers or agents shall not be responsible for the accuracy or completeness of electronic copies of this plan sheet.*

*To accompany plans dated* 12-27-11

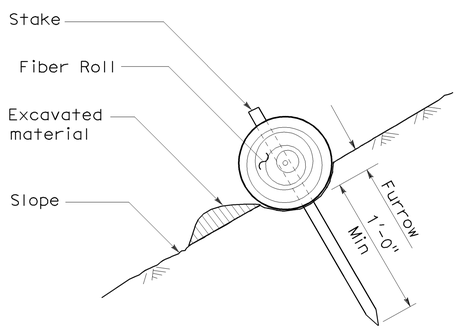


SECTION

TEMPORARY FIBER ROLL (TYPE 1)

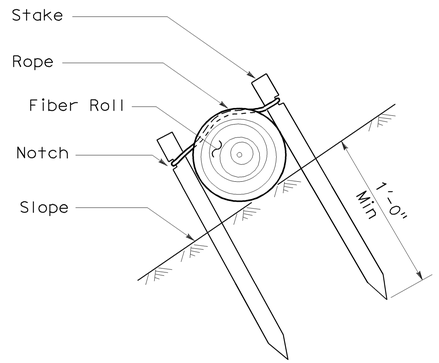


SECTION

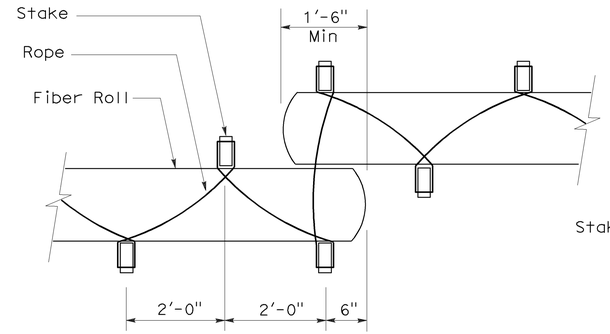


PLAN

TEMPORARY FIBER ROLL (TYPE 2)

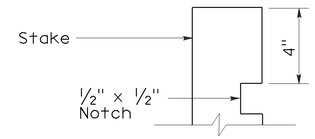


ELEVATION

STAKE NOTCH DETAIL

NOTES:

1. Temporary fiber roll spacing varies depending upon slope inclination.
2. Installations shown in the perspectives are for slope inclination of 10:1 and steeper.

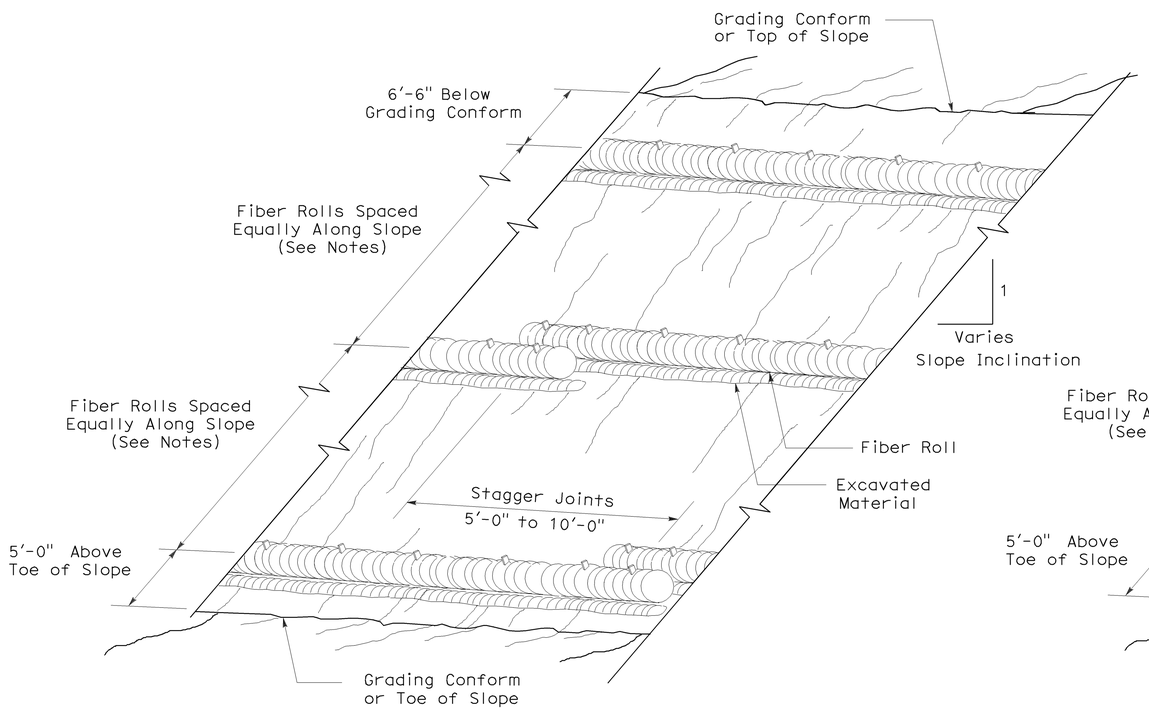


PERSPECTIVE

TEMPORARY FIBER ROLL (TYPE 1)

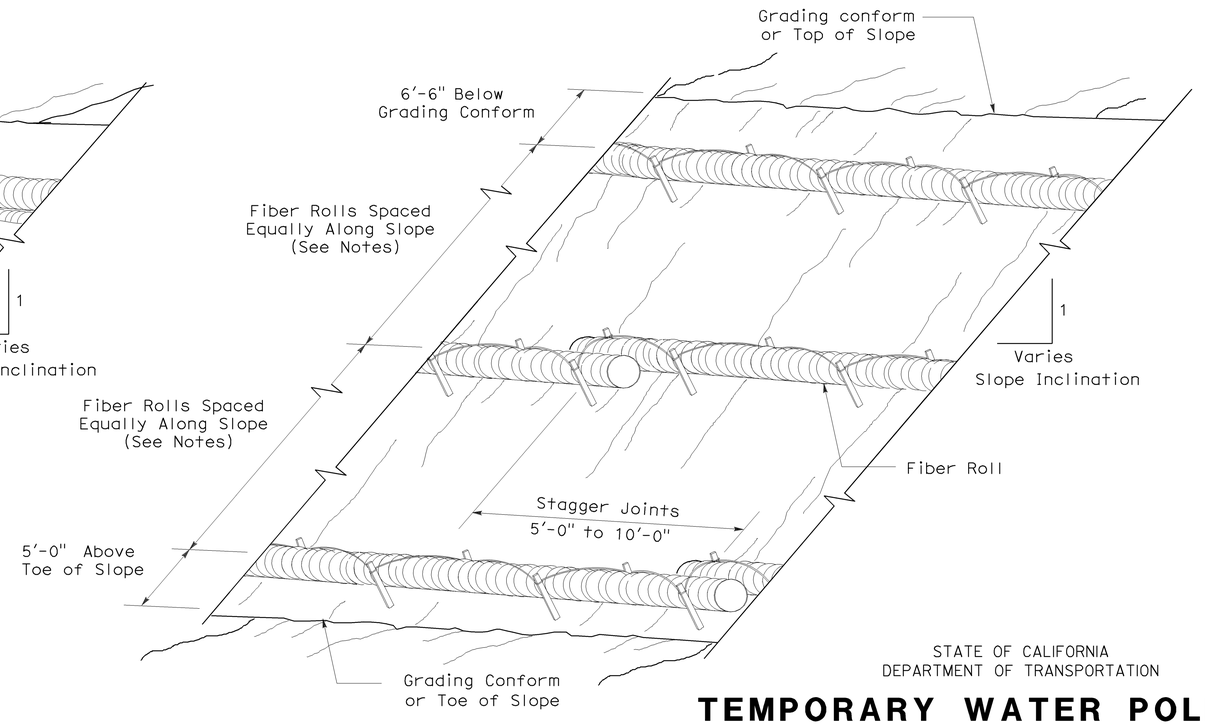


PERSPECTIVE

TEMPORARY FIBER ROLL (TYPE 2)

STATE OF CALIFORNIA
DEPARTMENT OF TRANSPORTATION

# TEMPORARY WATER POLLUTION CONTROL DETAILS (TEMPORARY FIBER ROLL)

NO SCALE

RSP T56 DATED APRIL 3, 2009 SUPERSEDES STANDARD PLAN T56
DATED MAY 1, 2006 - PAGE 232 OF THE STANDARD PLANS BOOK DATED MAY 2006.

**REVISED STANDARD PLAN RSP T56**

**2006 REVISED STANDARD PLAN RSP T56**



2-23-09

| DIST | COUNTY | ROUTE | POST MILES TOTAL PROJECT | SHEET NO. | TOTAL SHEETS |
|---|---|---|---|---|---|
| 04 | Sol | 80 | 30.6/38.7 | 220 | 231 |

LICENSED LANDSCAPE ARCHITECT

August 15, 2008
PLANS Approval DATE

*The State of California or its officers or agents shall not be responsible for the accuracy or completeness of electronic copies of this plan sheet.*

LICENSED LANDSCAPE ARCHITECT
Robert B. Schott 3635
Signature
11-04-08
Renewal Date
08-11-08
Date
STATE OF CALIFORNIA

*To accompany plans dated* 12-27-11

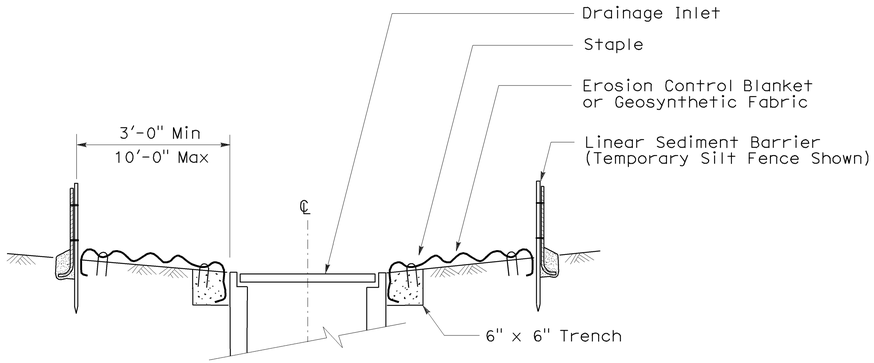


SECTION A-A

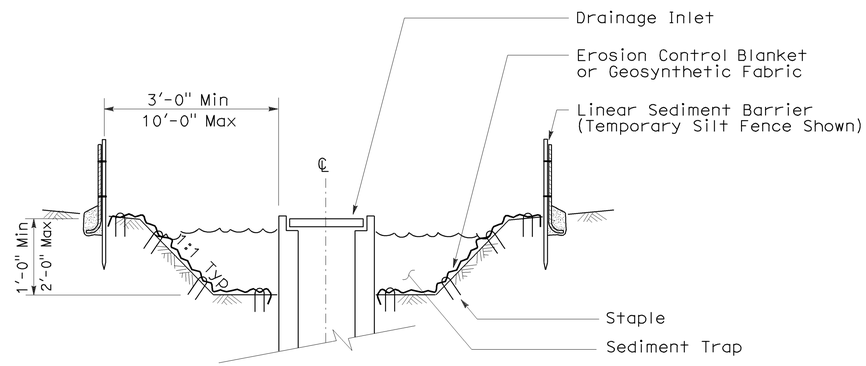


SECTION B-B

## NOTES:

1. See Standard Plan T51 for Temporary Silt Fence.
2. Dimensions may vary to fit field conditions.

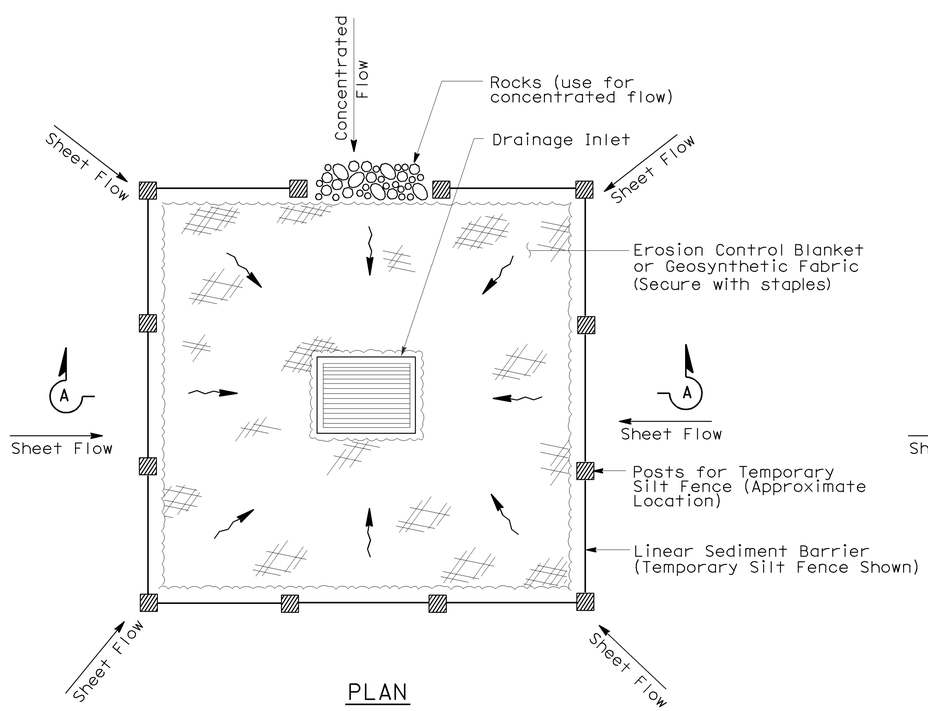


PLAN

TEMPORARY DRAINAGE
INLET PROTECTION (TYPE 1)

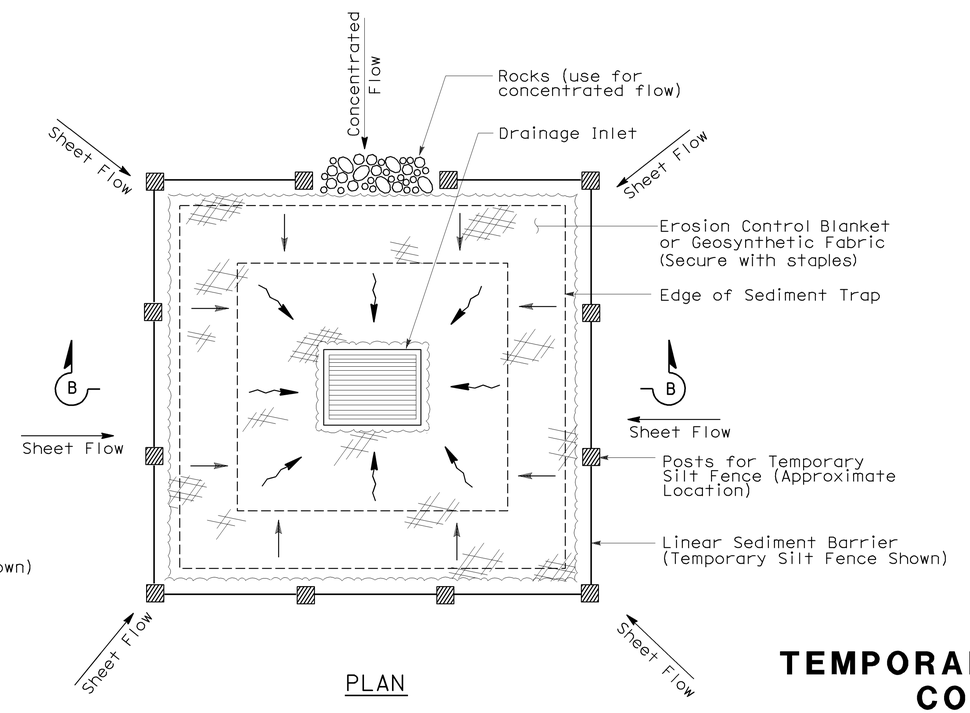


PLAN

TEMPORARY DRAINAGE
INLET PROTECTION (TYPE 2)
(EXCAVATED SEDIMENT TRAP)

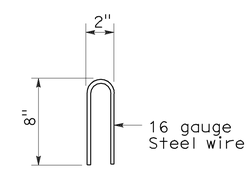


STAPLE DETAIL

STATE OF CALIFORNIA
DEPARTMENT OF TRANSPORTATION

# TEMPORARY WATER POLLUTION CONTROL DETAILS (TEMPORARY DRAINAGE INLET PROTECTION)

NO SCALE

Nsp t61 dated august 15, 2008 supplements the standard plans book dated may 2006.

**NEW STANDARD PLAN NSP T61**

**2006 NEW STANDARD PLAN NSP T61**

7-11-08

| DIST | COUNTY | ROUTE | POST MILES TOTAL PROJECT | SHEET NO. | TOTAL SHEETS |
|---|---|---|---|---|---|
| 04 | Sol | 80 | 30.6/38.7 | 221 | 231 |

LICENSED LANDSCAPE ARCHITECT

August 15, 2008
PLANS APPROVAL DATE

*The State of California or its officers or agents shall not be responsible for the accuracy or completeness of electronic copies of this plan sheet.*

LICENSED LANDSCAPE ARCHITECT — Robert B. Schott — 3635 — Signature — 11-04-08 Renewal Date — 08-11-08 Date — STATE OF CALIFORNIA

*To accompany plans dated* 12-27-11

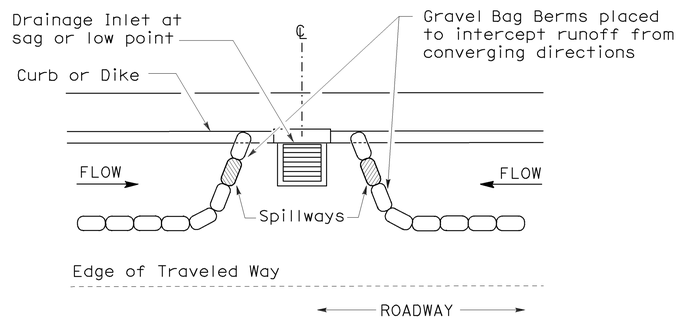


PLAN

## CONFIGURATION FOR SAG POINT INLET (GRAVEL BAG BERM)

## GRAVEL BAG BERM (TYPE 3A) SPACING TABLE

| SLOPE OF ROADWAY (PERCENT) | 1 to 3.9 | 4 to 5.9 | 6 to 7.9 | 8 to 10 | 10+ |
|---|---|---|---|---|---|
| INTERVAL BETWEEN BERM | 100′ | 75′ | 50′ | 25′ | 12′ |

For slope of less than 1%, install barriers only if erosion/sediment is prevalent

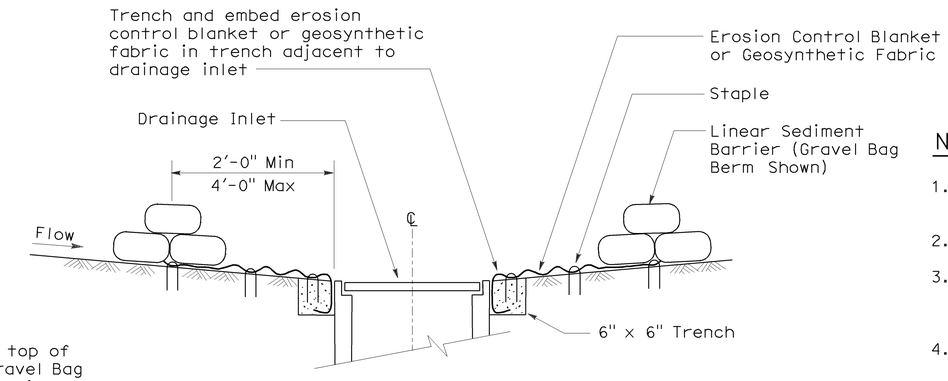


SECTION A-A

## NOTES:

1. Place safety cones adjacent to drainage inlet protection.
2. Dimensions may vary to fit field conditions.
3. Install a minimum of 3 gravel bag berms upstream of each drainage inlet to be protected.
4. Position erosion control blanket or geosynthetic fabric at edge of concrete apron and secure in trench.
5. Erosion control blanket or geosynthetic fabric is not required if the area adjacent to the drainage inlet is vegetated or paved.

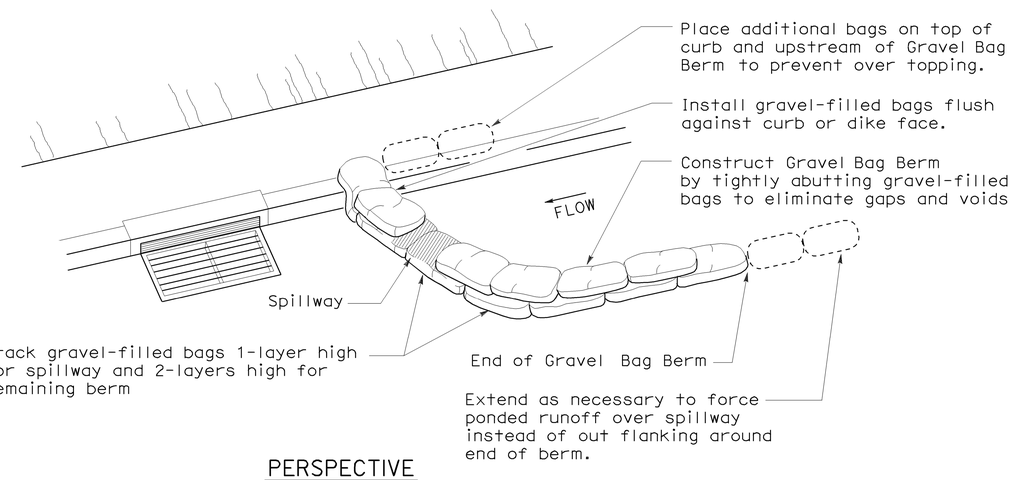


PERSPECTIVE

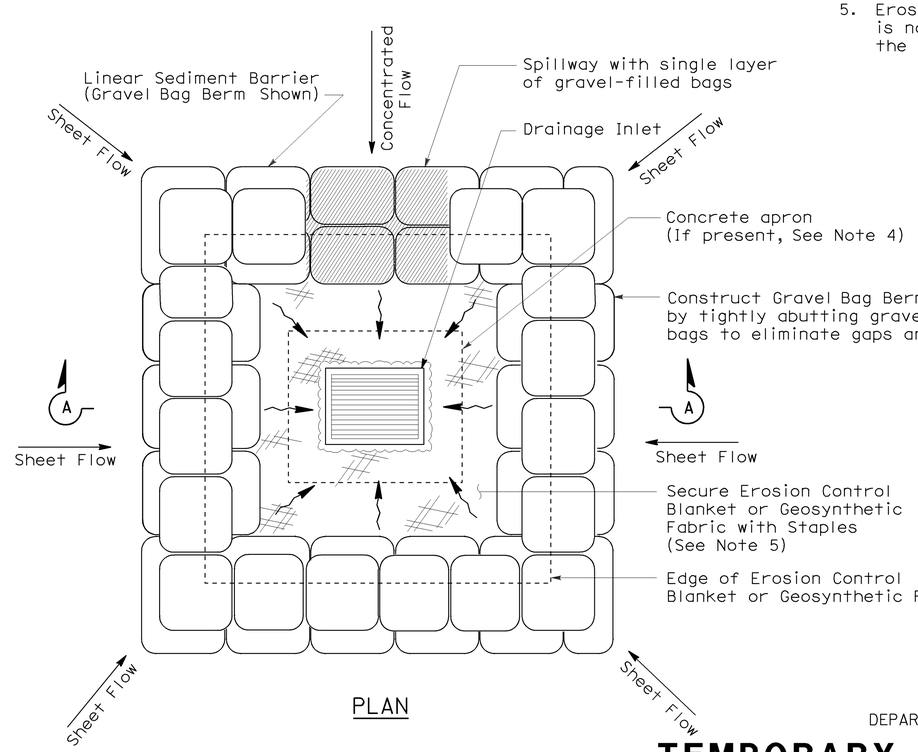


PLAN

## TEMPORARY DRAINAGE INLET PROTECTION (TYPE 3B)

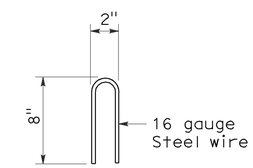


STAPLE DETAIL

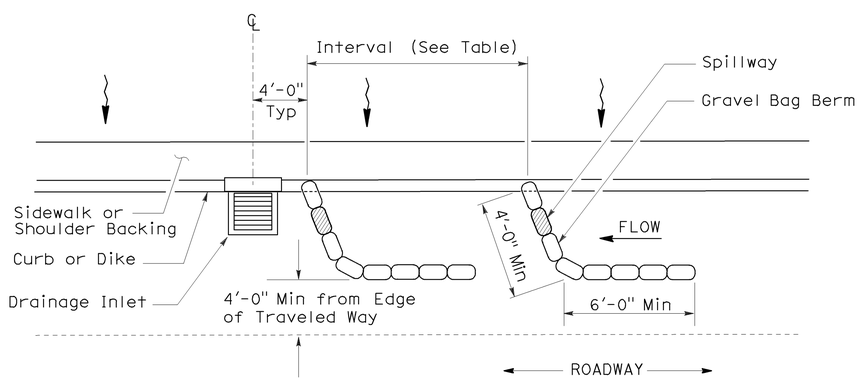


PLAN

## TEMPORARY DRAINAGE INLET PROTECTION (TYPE 3A) (GRAVEL BAG BERM)

STATE OF CALIFORNIA
DEPARTMENT OF TRANSPORTATION

# TEMPORARY WATER POLLUTION CONTROL DETAILS (TEMPORARY DRAINAGE INLET PROTECTION)

NO SCALE

NSP T62 DATED AUGUST 15, 2008 SUPPLEMENTS THE STANDARD PLANS BOOK DATED MAY 2006.

**NEW STANDARD PLAN NSP T62**

**2006 NEW STANDARD PLAN NSP T62**

7-11-08

| DIST | COUNTY | ROUTE | POST MILES TOTAL PROJECT | SHEET NO. | TOTAL SHEETS |
|---|---|---|---|---|---|
| 04 | Sol | 80 | 30.6/38.7 | 222 | 231 |

LICENSED LANDSCAPE ARCHITECT

August 15, 2008
PLANS APPROVAL DATE

LICENSED LANDSCAPE ARCHITECT Robert B. Schott 3635 Signature 11-04-08 Renewal Date 08-11-08 Date STATE OF CALIFORNIA

*The State of California or its officers or agents shall not be responsible for the accuracy or completeness of electronic copies of this plan sheet.*

*To accompany plans dated* 12-27-11

## FLEXIBLE SEDIMENT BARRIER SPACING TABLE

| SLOPE OF ROADWAY (PERCENT) | 0 to 0.9 | 1 to 1.9 | 2 to 2.9 | 3 to 4 | 5+ |
|---|---|---|---|---|---|
| INTERVAL BETWEEN BARRIERS | 50′ | 35′ | 30′ | 25′ | 20′ |
| ANGLE FROM FACE OF CURB | 70° | 70° | 70° | 45° | 45° |
| SUGGESTED BARRIER LENGTH | 6′ | 6′ | 6′ | 6′ | 6′ |

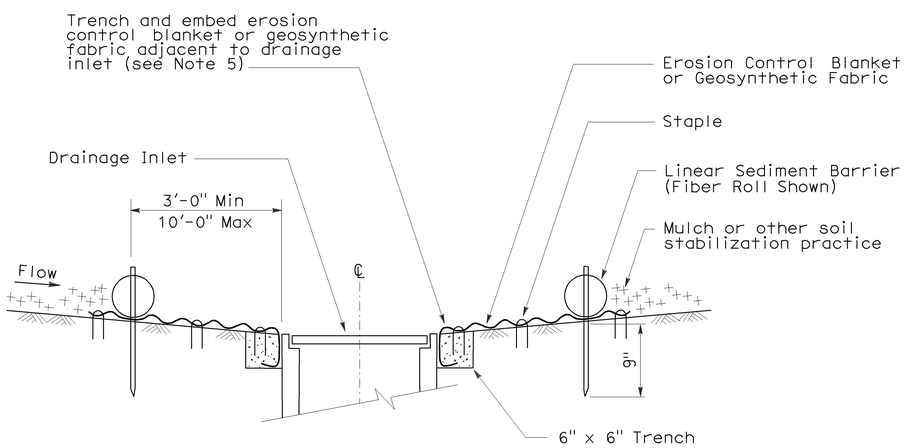


SECTION A-A

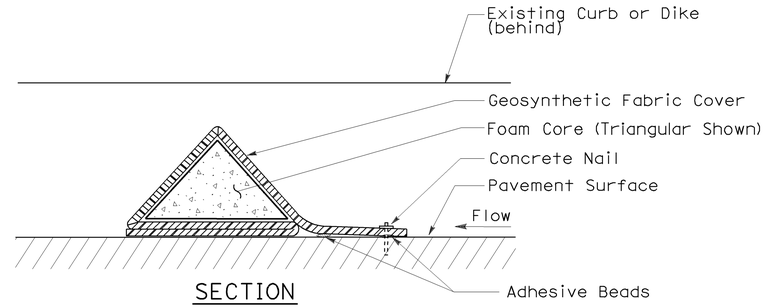


SECTION

## FLEXIBLE SEDIMENT BARRIER DETAIL (FOAM BARRIER SHOWN)

## NOTES:

1. See Standard Plan T51 for Temporary Silt Fence.
2. Dimensions may vary to fit field conditions.
3. Install a minimum of 3 flexible sediment barriers upstream of each drainage inlet to be protected.
4. Position erosion control blanket or geosynthetic fabric at edge of concrete apron and secure in trench.
5. Erosion control blanket or geosynthetic fabric is not required if the area adjacent to the drainage inlet is vegetated.

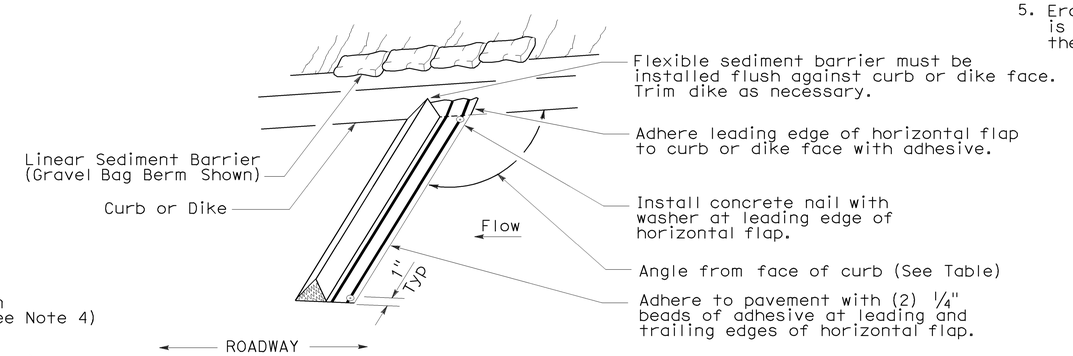


PERSPECTIVE

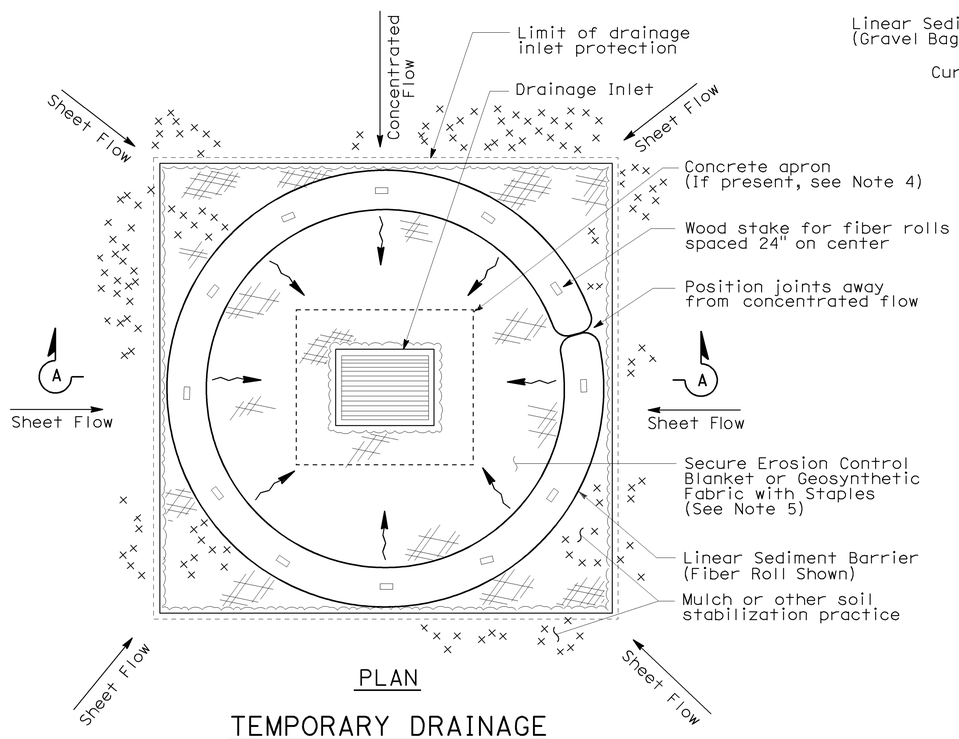


PLAN

## TEMPORARY DRAINAGE INLET PROTECTION (TYPE 4A)

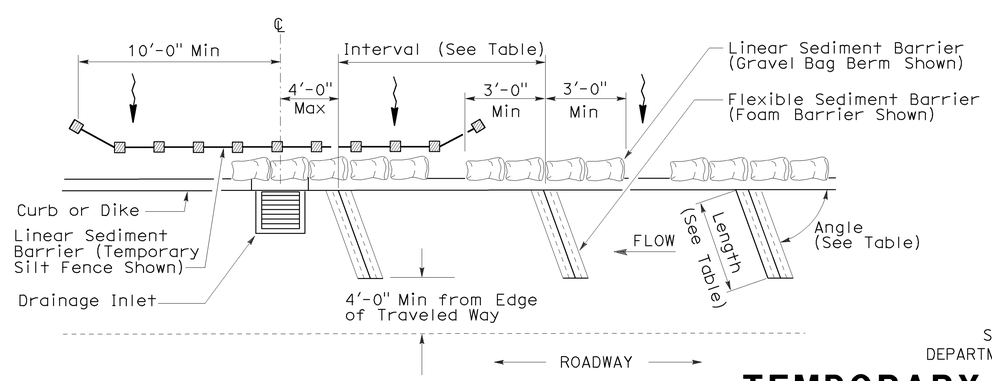


PLAN

## TEMPORARY DRAINAGE INLET PROTECTION (TYPE 4B) FLEXIBLE SEDIMENT BARRIER

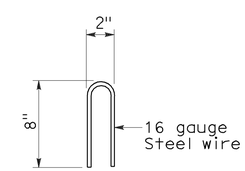


STAPLE DETAIL

STATE OF CALIFORNIA
DEPARTMENT OF TRANSPORTATION

# TEMPORARY WATER POLLUTION CONTROL DETAILS (TEMPORARY DRAINAGE INLET PROTECTION)

NO SCALE

NSP T63 DATED AUGUST 15, 2008 SUPPLEMENTS THE STANDARD PLANS BOOK DATED MAY 2006.

**NEW STANDARD PLAN NSP T63**

**2006 NEW STANDARD PLAN NSP T63**

7-11-08

| DIST | COUNTY | ROUTE | POST MILES TOTAL PROJECT | SHEET NO. | TOTAL SHEETS |
|---|---|---|---|---|---|
| 04 | Sol | 80 | 30.6/38.7 | 223 | 231 |

LICENSED LANDSCAPE ARCHITECT

August 15, 2008
PLANS APPROVAL DATE

LICENSED LANDSCAPE ARCHITECT Robert B. Schott 3635 Signature 11-04-08 Renewal Date 08-11-08 Date STATE OF CALIFORNIA

*The State of California or its officers or agents shall not be responsible for the accuracy or completeness of electronic copies of this plan sheet.*

*To accompany plans dated* 12-27-11

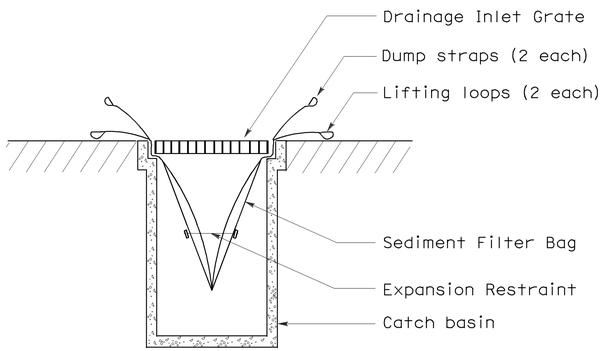


SECTION B-B

## SEDIMENT FILTER BAG DETAIL

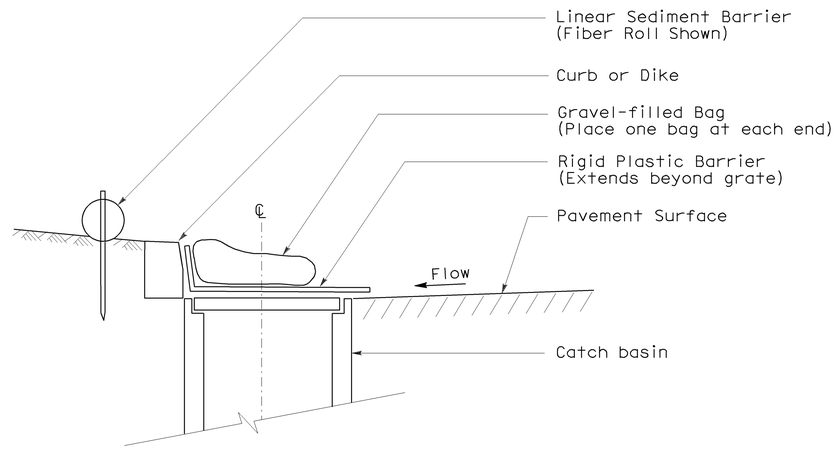


SECTION

## TEMPORARY DRAINAGE INLET PROTECTION (TYPE 6A) (CATCH BASIN WITH GRATE)

NOTES:

1. See Standard Plan T51 for Temporary Silt Fence.
2. Dimensions may vary to fit field conditions.

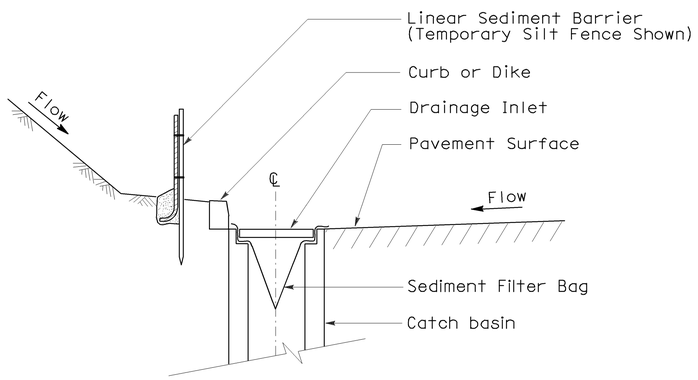


SECTION A-A

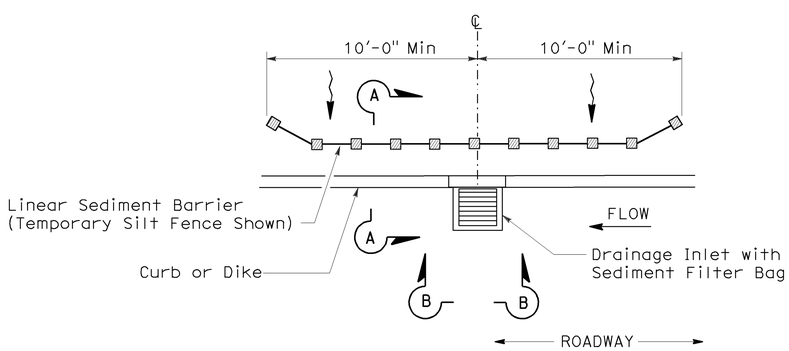


PLAN

## TEMPORARY DRAINAGE INLET PROTECTION (TYPE 5) (SEDIMENT FILTER BAG)

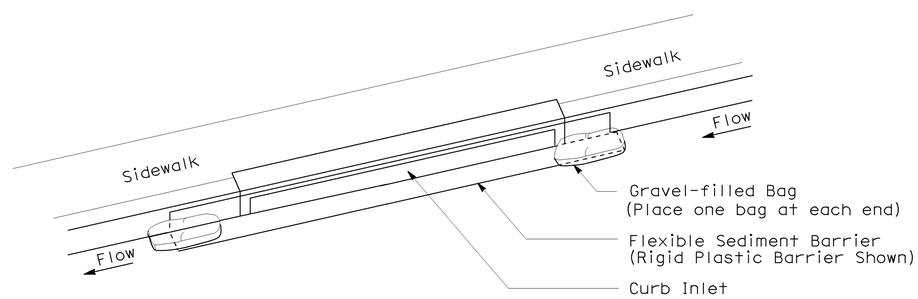


PERSPECTIVE

## TEMPORARY DRAINAGE INLET PROTECTION (TYPE 6B) (CURB INLET WITHOUT GRATE)

STATE OF CALIFORNIA
DEPARTMENT OF TRANSPORTATION

# TEMPORARY WATER POLLUTION CONTROL DETAILS (TEMPORARY DRAINAGE INLET PROTECTION)

NO SCALE

NSP T64 DATED AUGUST 15, 2008 SUPPLEMENTS THE STANDARD PLANS BOOK DATED MAY 2006.

**NEW STANDARD PLAN NSP T64**

**2006 NEW STANDARD PLAN NSP T64**

7-11-08

| DIST | COUNTY | ROUTE | POST MILES TOTAL PROJECT | SHEET NO. | TOTAL SHEETS |
|---|---|---|---|---|---|
| 04 | Sol | 80 | 30.6/38.7 | 224 | 231 |

REGISTERED CIVIL ENGINEER

October 5, 2007
PLANS APPROVAL DATE

REGISTERED PROFESSIONAL ENGINEER Efthymios Delis No. C51434 Exp. 6-30-08 CIVIL STATE OF CALIFORNIA

*The State of California or its officers or agents shall not be responsible for the accuracy or completeness of electronic copies of this plan sheet.*

*To accompany plans dated* 12-27-11

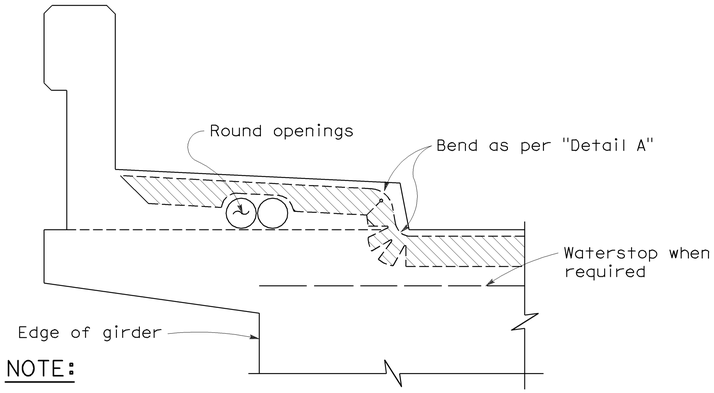


NOTE:

Type "B" seal shown. Type "A" seals to comform to the general path of seal shown, cuts for bending not required. Bend Type "A" seals 3" up into curb or barrier rail on only the low end of the seal.

CONCRETE BARRIER AND SIDEWALK

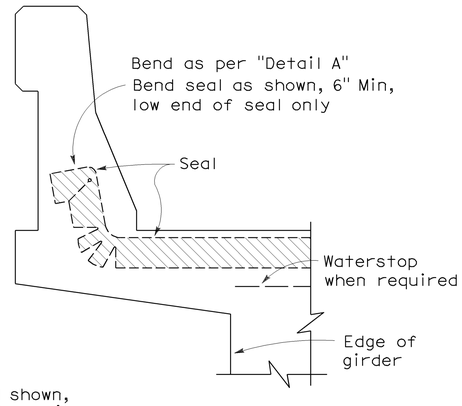


CONCRETE BARRIER

## JOINT SEALS DETAILS

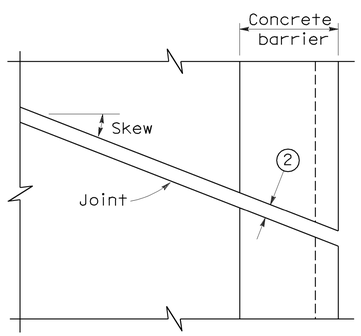


PLAN OF JOINT (SKEW ≤ 20°)

Min ℄ radius to be 4 times uncompressed width of seal or as recommended by the manufacturer, whichever is greater

In lieu of saw cutting, this area may be blocked out and reconstructed to match saw cutting on both sides.

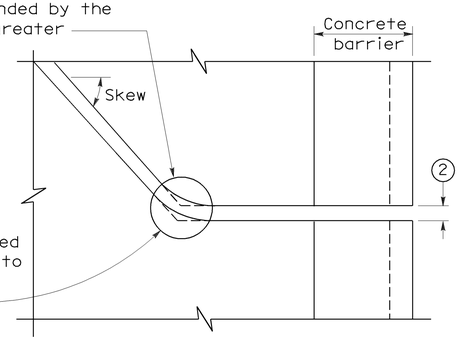


PLAN OF JOINT (SKEW > 20°)

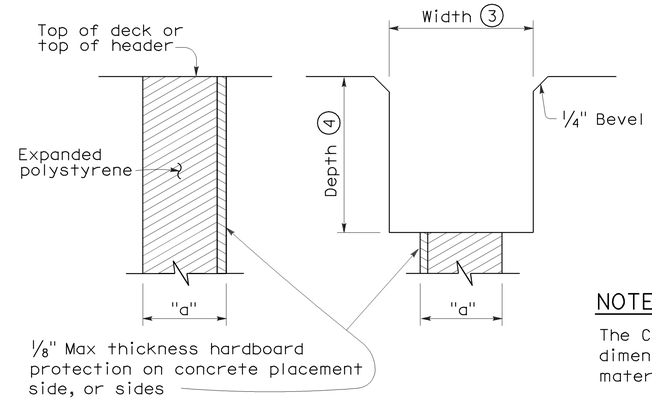


FORMING DETAIL SAWCUT DETAIL

NOTE:

The Contractor shall verify all controlling field dimensions before ordering or fabricatiing any material.

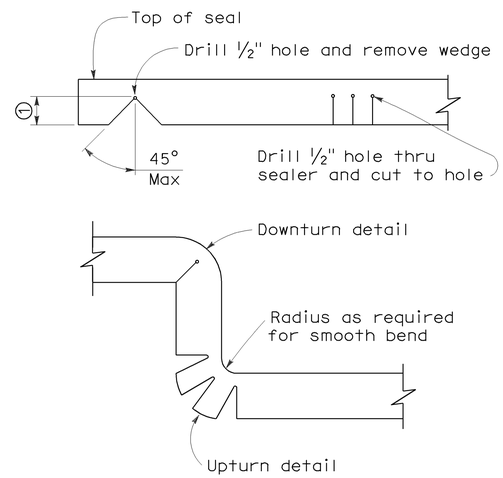


DETAIL A

NOTES:

1. Make smooth cuts from the bottom of seal to 1½" clear of top leaving at least one complete cell between the top of the cut and top of the seal. When necessary cut back of seal to clear conduit and round openings.
2. Opening in barrier to match width of sawn deck joint.
3. Sawcut groove widths shall be as ordered by the Engineer.
4. Depth of sawcut: Type A - Depth to be 2" minimum.
   Type B - Depth to be equal to or greater than the depth of seal measured along the contact surface, when compressed to minimum width position ($W_2$) plus dimensions shown.
5. MR (movement rating) as shown on other plan sheets.
6. Other depths must be approved by the Engineer.

DIMENSIONS "a" OF JOINT REQUIRED

| Movement Rating (MR) 5 | Bridge Type | "a" Dimension Deck Concrete Placed | | |
|---|---|---|---|---|
| | | Winter | Fall-Spring | Summer |
| 2" | All except CIP/PS | 1½" | 1¼" | ¾" |
| | CIP/PS | 1¼" | 1" | ½" |
| 1½" | All except CIP/PS | 1¼" | 1" | ½" |
| | CIP/PS | 1" | ¾" | ½" |
| 1" | All except CIP/PS | 1" | ¾" | ½" |
| | CIP/PS | ¾" | ½" | ½" |
| ½" | All except CIP/PS | ¾" | ¾" | ½" |
| | CIP/PS | ½" | ½" | ½" |

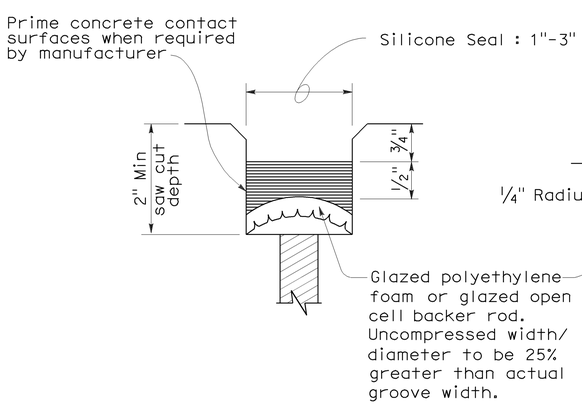


TYPE A SEAL

Movement rating : Silicone = 1" Max

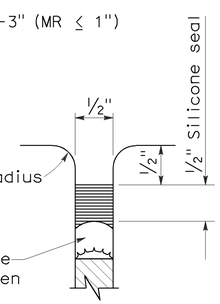


TYPE AL SEAL

Longitudinal joints only

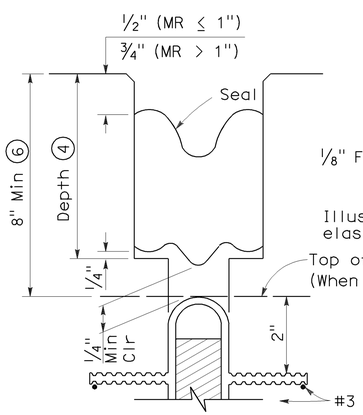


TYPE B JOINT SEAL
IN MINIMUM WIDTH POSITION ($W_2$)

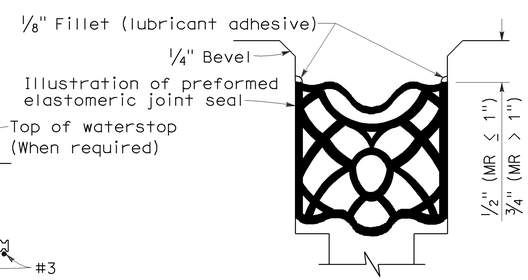


TYPE B SEAL

Movement Rating ≤ 2"

STATE OF CALIFORNIA
DEPARTMENT OF TRANSPORTATION

**JOINT SEALS (MAXIMUM MOVEMENT RATING = 2")**

NO SCALE

RSP B6-21 DATED OCTOBER 5, 2007 SUPERSEDES STANDARD PLAN B6-21 DATED MAY 1, 2006 - PAGE 258 OF THE STANDARD PLANS BOOK DATED MAY 2006.

**REVISED STANDARD PLAN RSP B6-21**

**2006 REVISED STANDARD PLAN RSP B6-21**

5-8-07

| DIST | COUNTY | ROUTE | POST MILES TOTAL PROJECT | SHEET NO. | TOTAL SHEETS |
|---|---|---|---|---|---|
| 04 | Sol | 80 | 30.6/38.7 | 225 | 231 |

REGISTERED ELECTRICAL ENGINEER

October 5, 2007
PLANS APPROVAL DATE

REGISTERED PROFESSIONAL ENGINEER Jeffery G. McRae No. E14512 Exp. 6-30-08 ELECTRICAL STATE OF CALIFORNIA

*The State of California or its officers or agents shall not be responsible for the accuracy or completeness of electronic copies of this plan sheet.*

*To accompany plans dated* 12-27-11

2006 REVISED STANDARD PLAN RSP ES-1A

## ELECTROLIERS

| STANDARD TYPES |
|---|
| 15, 15D |
| 15 STRUCTURE |
| 21, 21D STRUCTURE |
| 30 |
| 31 |
| 32 |
| 35 |
| 36-20A |

High mast light pole

Double Arm lighting standard

Existing electrolier

Electrolier foundation (Future installation)

### NOTES:

1. Luminaires shall be 310 W HPS when installed on Type 21, 21D, 30, 31, 32, 35 and 36-20A Standards, unless otherwise specified. Luminaires shall be 200 W HPS when installed on other type standards or poles, unless otherwise specified.
2. Luminaires shall be the cutoff type, ANSI Type III medium cutoff lighting distribution, unless otherwise specified.
3. Variations noted adjacent to symbol on project plans.

Electrolier (see project notes or project plans)

Luminaire on wood pole

## STANDARD NOTES:

- AB — Abandon. If applied to conduit, remove conductors.
- BC — Install pull box in existing conduit run.
- BP — Pedestrian barricade, type as indicated on plan.
- CB — Install conduit into existing pull box.
- CC — Connect new and existing conduit. Remove existing conductors and install conductors as indicated.
- CF — Conduit to remain for future use. Remove conductors. Install pull wire or rope.
- DH — Detector handhole.
- FA — Foundation to be abandoned.
- IS — Install sign on signal mast arm.
- NS — No slip base on standard.
- PEC — Photoelectric control.
- PEU — Photoelectric unit.
- RC — Equipment or material to be removed and become the property of the Contractor.
- RE — Remove electrolier, fuses and ballast. Tape ends of conductors.
- RL — Relocate equipment.
- RR — Remove and reuse equipment.
- RS — Remove and salvage equipment.
- SC — Splice new to existing conductors.
- SD — Service disconnect.
- SF — Standard to remain for future use. Remove luminaire, pole conductors, fuses and ballast.
- TSP — Telephone service point.

## ABBREVIATIONS AND EQUIPMENT DESIGNATIONS

| PROPOSED | EXISTING | |
|---|---|---|
| BBS | bbs | Battery backup system |
| BC | bc | Bolt circle |
| C | C | Conduit |
| CCTV | cctv | Closed circuit television |
| CKT | ckt | Circuit |
| CMS | cms | Changeable message sign |
| DLC | dlc | Loop detector lead-in cable |
| EMS | ems | Extinguishable message sign |
| EVC | evc | Emergency vehicle cable |
| EVD | evd | Emergency vehicle detector |
| FB | fb | Flashing beacon |
| FBCA | fbca | Flashing beacon control assembly |
| FBS | fbs | Flashing beacon with slip base |
| FO | fo | Fiber optic |
| G | G | Ground (Equipment Grounding Conductor) |
| GFCI | GFCI | Ground fault circuit interrupt |
| HAR | har | Highway advisory radio |
| HEX | hex | Hexagonal |
| HPS | hps | High pressure sodium |
| IISNS | iisns | Internally illuminated street name sign |
| ISL | isl | Induction sign lighting |
| LED | led | Light emitting diode |
| LMA | lma | Luminaire mast arm |
| LPS | lps | Low pressure sodium |
| LTG | ltg | Lighting |
| LUM | lum | Luminaire |
| MAT | mat | Mast arm mounting vehicle signal faces, top attachment |
| MAS | mas | Mast arm mounting vehicle signal faces, side attachment |
| MAS-4A | mas-4A | Mast arm mounting vehicle signal faces, side attachment - 4 signal section |
| MAS-4B | mas-4B | |
| MAS-4C | mas-4C | |
| MAS-5A | mas-5A | Mast arm mounting vehicle signal faces, side attachment - 5 signal section |
| MAS-5B | mas-5B | |
| MC | mc | Mercury contactor |
| M/M | m/m | Multiple to multiple transformer |
| MT | mt | Conduit with pull wire or rope only |
| MTG | mtg | Mounting |
| | mv | Mercury vapor lighting fixture |
| N | N | Neutral (Grounded Conductor) |
| NC | NC | Normally closed |
| NO | NO | Normally open |
| PB | pb | Pull box |
| PEC | pec | Photoelectric control (Type I, II, III, IV or V as shown) |
| PED | ped | Pedestrian |
| PEU | peu | Photoelectric unit |
| PPB | ppb | Pedestrian push button |
| RL | | Relocated equipment |
| RM | rm | Ramp metering |
| SB | sb | Slip base |
| SIC | sic | Signal interconnect cable |
| SIG | sig | Signal |
| SMA | sma | Signal mast arm |
| SNS | sns | Street name sign |
| SP | sp | Service point |
| TDC | tdc | Telephone demarcation cabinet |
| TMS | tms | Traffic monitoring station |
| TOS | tos | Traffic Operations System |
| VEH | veh | Vehicle |
| XFMR | xfmr | Transformer |
| COMM | comm | Communication |
| RWIS | rwis | Roadway weather information system |

## SOFFIT AND WALL MOUNTED LUMINAIRES

Pendant, 70 W HPS unless otherwise specified.

Flush, 70 W HPS unless otherwise specified.

Wall surface, 70 W HPS unless otherwise specified.

Existing soffit or wall luminaire to remain unmodified.

Existing soffit or wall luminaire to be modified as specified.

### NOTE:

Arrow indicates "street side" of luminaire.

STATE OF CALIFORNIA
DEPARTMENT OF TRANSPORTATION

# ELECTRICAL SYSTEMS (SYMBOLS AND ABBREVIATIONS)

NO SCALE

RSP ES-1A DATED OCTOBER 5, 2007 SUPERSEDES STANDARD PLAN ES-1A DATED MAY 1, 2006 - PAGE 400 OF THE STANDARD PLANS BOOK DATED MAY 2006.

**REVISED STANDARD PLAN RSP ES-1A**

| DIST | COUNTY | ROUTE | POST MILES TOTAL PROJECT | SHEET NO. | TOTAL SHEETS |
|---|---|---|---|---|---|
| 04 | Sol | 80 | 30.6/38.7 | 226 | 231 |

REGISTERED ELECTRICAL ENGINEER

October 5, 2007
PLANS APPROVAL DATE

REGISTERED PROFESSIONAL ENGINEER Jeffery G. McRae No. E14512 Exp. 6-30-08 ELECTRICAL STATE OF CALIFORNIA

*The State of California or its officers or agents shall not be responsible for the accuracy or completeness of electronic copies of this plan sheet.*

*To accompany plans dated* 12-27-11

## CONDUIT

| PROPOSED | EXISTING | |
|---|---|---|
| | | Lighting Conduit, unless otherwise indicated or noted |
| | | Traffic signal conduit |
| C | c | Communication conduit |
| T | t | Telephone conduit |
| F | f | Fire alarm conduit |
| FO | fo | Fiber optic conduit |
| | | Conduit termination (RSP ES-9A C) |
| R | r | Conduit riser in/on structure or service pole |

## SERVICE EQUIPMENT

| PROPOSED | EXISTING | |
|---|---|---|
| OH | oh | Overhead lines |
| U | U | Wood pole "U" indicates utility owned |
| | | Pole guy with anchor |
| | | Utility transformer - ground mounted |
| III | | Service equipment enclosure type |
| | | Service equipment enclosure door indicates front of enclosure |
| T | t | Telephone demarcation cabinet |

## POLE-MOUNTED SERVICE DESIGNATION

Type of installation

TYPE H SERVICE - 28'-10" ← Pole height above grade

## ILLUMINATED OVERHEAD SIGN

| PROPOSED | EXISTING | |
|---|---|---|
| | | Overhead sign - Single post |
| | | Overhead sign - Two post |
| | | Overhead sign - Mounted on structure |
| | | Overhead sign with electrolier |

## SIGNAL EQUIPMENT

| PROPOSED | EXISTING | |
|---|---|---|
| | | Pedestrian signal face |
| | | Pedestrian push button post |
| | | Pedestrian barricade |
| | | Vehicle signal face (with backplate, 3-Section: red, yellow and green) |
| | | Vehicle signal face with angle visors |
| PV | PV | Modifications of basic symbols: "L" Indicates all non-arrow sections louvered "LG" indicates louvered green section only "PV" indicates 12" programmed visibility sections "8" indicates all 8" sections (only when specified) |
| | | Type 15TS and Vehicle signal face |
| | | Vehicle signal face with red, yellow and green left arrow sections |
| | | Vehicle signal face with red and yellow sections and up green arrow |
| | | Vehicle signal face (5 Section) with red, yellow and green sections and yellow and green right arrows |
| | | Type 1 Standard and attached vehicle signal faces |
| | | Standard with signal mast arm only and attached vehicle signal faces and internally illuminated street name sign |
| | | Type 33 Standard, Left-turn vehicle signal face and sign |
| | | Standard with luminaire and signal mast arms and attached vehicle signal faces |
| | | Cantilever flashing beacon Type 9 Frame, with a sign unless otherwise specified or indicated |
| | | Type 15-FBS Standard with two vehicle signal face sections with lens, backplate and visor with a sign |
| R | Y | Flashing beacon. One vehicle signal face section with lens, backplate and visor. "R" indicates red indication, "Y" indicates yellow indication |
| | | Controller assembly. Door indicates front of cabinet |

## SIGNAL EQUIPMENT Cont

| PROPOSED | EXISTING | |
|---|---|---|
| | | Guard post |
| | | Type 1 Standard with "Meter On" sign |
| | | Emergency Vehicle detector |

## NOTES:

1. All signal sections shall be 12" unless shown otherwise.
2. Signal heads shall be provided with backplates unless shown otherwise.
3. Signal indication shall be LED.

STATE OF CALIFORNIA
DEPARTMENT OF TRANSPORTATION

# ELECTRICAL SYSTEMS (SYMBOLS AND ABBREVIATIONS)

NO SCALE

RSP ES-1B DATED OCTOBER 5, 2007 SUPERCEDES STANDARD PLAN ES-1B DATED MAY 1, 2006 - PAGE 401 OF THE STANDARD PLANS BOOK DATED MAY 2006.

**REVISED STANDARD PLAN RSP ES-1B**

**2006 REVISED STANDARD PLAN RSP ES-1B**

7-10-07

| DIST | COUNTY | ROUTE | POST MILES TOTAL PROJECT | SHEET NO. | TOTAL SHEETS |
|---|---|---|---|---|---|
| 04 | Sol | 80 | 30.6/38.7 | 227 | 231 |

REGISTERED ELECTRICAL ENGINEER

October 5, 2007
PLANS APPROVAL DATE

REGISTERED PROFESSIONAL ENGINEER Jeffery G. McRae No. E14512 Exp. 6-30-08 ELECTRICAL STATE OF CALIFORNIA

*The State of California or its officers or agents shall not be responsible for the accuracy or completeness of electronic copies of this plan sheet.*

*To accompany plans dated* 12-27-11

# EQUIPMENT IDENTIFICATION

## ILLUMINATED SIGN IDENTIFICATION NUMBER:

Sign No. 12345 — Sign number - Place on post or structure

10 ISL SCI 1.0

- 1.0 — Transformer rating (kVA)
- SCI — Lighting control type
- ISL — Number and type of fixtures

Do NOT place on standard or structure

## ELECTROLIER OR EQUIPMENT IDENTIFICATION NUMBER:

12345 - 15'-0"

- 15'-0" — Mast arm length, if shown. Do not place on standard or structure.
- 12345 — Equipment number - Place on standard or structure. Existing equipment numbers are shown in parenthesis

## CONDUIT AND CONDUCTOR IDENTIFICATION:

1½"C, 2#10, 15#14, 2 DLC

- 2#10, 15#14, 2 DLC — Number and size of conductors and cables
- 1½"C — Size of conduit in inches

| | |
|---|---|
| Ø1, Ø2, Ø2P, etc. | Traffic phase identification for signal faces, detectors and phase diagrams |
| 1 2 3 | Project note numbers |
| A B C | Equipment description, installation or item numbers |
| 1 2 3 | Conduit run numbers |

## SIGNAL AND LIGHTING STANDARD (TYPICAL DESIGNATION):

19A - 3 - 100

- 100 — Wind velocity = 100 mph
- 3 — Case 3 arm loading
- 19A — Standard type
- Standard Plan sheet number
- Detail number or letter

## MISCELLANEOUS EQUIPMENT

| PROPOSED | EXISTING | |
|---|---|---|
| CMS | cms | Changeable message sign |
| | | Closed circuit television camera |
| | | Highway advisory radio pole and antenna |
| EMS | ems | Extinguishable message sign |
| M V | m v | Detection device<br>M = Microwave sensor<br>V = Video image sensor |

## WIRING DIAGRAM LEGEND

| | |
|---|---|
| P | Pole |
| CB | Circuit breaker |
| A | Ampere |
| V | Volt |
| M | Metered |
| UM | Unmetered |
| NB | Neutral bus |
| GB | Ground bus |
| G | Equipment grounding conductor |
| N | Grounded conductor (Neutral) |

External conductor
Conductor or bus
Tie point
Contactor coil
Contactor, Contact NO
Terminal blocks
Contactor, Contact NC
Enclosure bond
Grounding electrode
Circuit breaker
Receptacle

## PULL BOXES

| PROPOSED | EXISTING | |
|---|---|---|
| | | Pull box-No. 5 unless otherwise indicated or noted. |
| 3 | 9A(21) | Pull box-Additional designations or descriptions |

3 = No. 3½ pull box
5 = No. 5 pull box
6 = No. 6 pull box
7 = No. 7 (Ceiling pull box)
8 = No. 8 (Pendant soffit pull box)
9 = No. 9 pull box
9A = No. 9A pull box

(C) = Communications pull box
(E) = Pull box with extension
(S) = Sprinkler control pull box
(21) = Anchor bolts and conduit for future installation of Type 21 Standard
(T) = Traffic pull box

## VEHICLE DETECTORS

5 J 9 U

- U = Upper
- L = Lower
- 9 — Slot number in input file
- J — Input file (I or J)
- 5 — Phase

| PROPOSED | EXISTING | |
|---|---|---|
| | | Type A detector loop. Outline of sawcut shown. |
| | | Type B detector loop. Outline of sawcut shown. |
| | | Type C detector loop. Outline of sawcut shown. |
| | | Type D detector loop. Outline of sawcut shown. |
| | | Type E detector loop. Outline of sawcut shown. |
| | | Type Q detector loop. Outline of sawcut shown. |
| | | Magnetic detector |
| DH | dh | Detector handhole |
| | | Microwave or video detection zone |

STATE OF CALIFORNIA
DEPARTMENT OF TRANSPORTATION

# ELECTRICAL SYSTEMS (SYMBOLS AND ABBREVIATIONS)

NO SCALE

RSP ES-1C DATED OCTOBER 5, 2007 SUPERCEDES STANDARD PLAN ES-1C DATED MAY 1, 2006 - PAGE 402 OF THE STANDARD PLANS BOOK DATED MAY 2006.

**REVISED STANDARD PLAN RSP ES-1C**

**2006 REVISED STANDARD PLAN RSP ES-1C**

| DIST | COUNTY | ROUTE | POST MILES TOTAL PROJECT | SHEET No. | TOTAL SHEETS |
|---|---|---|---|---|---|
| 04 | Sol | 80 | 30.6/38.7 | 228 | 231 |

REGISTERED CIVIL ENGINEER 12-22-11 DATE

12-27-11
PLANS APPROVAL DATE

REGISTERED PROFESSIONAL ENGINEER JAY A. QUIOGUE No. 65766 Exp. 9-30-13 CIVIL STATE OF CALIFORNIA

*The State of California or its officers or agents shall not be responsible for the accuracy or completeness of electronic copies of this plan sheet.*

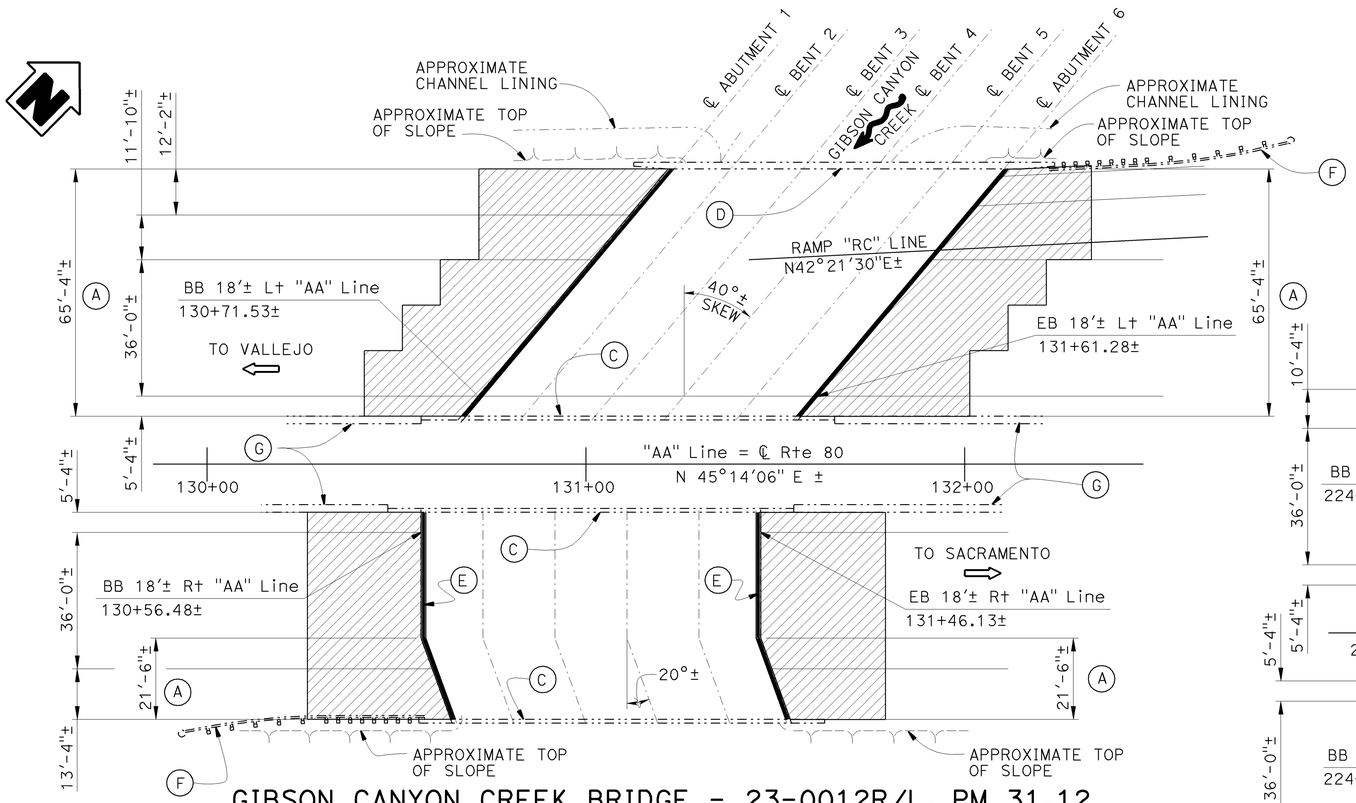


## GIBSON CANYON CREEK BRIDGE - 23-0012R/L, PM 31.12

1" = 20'

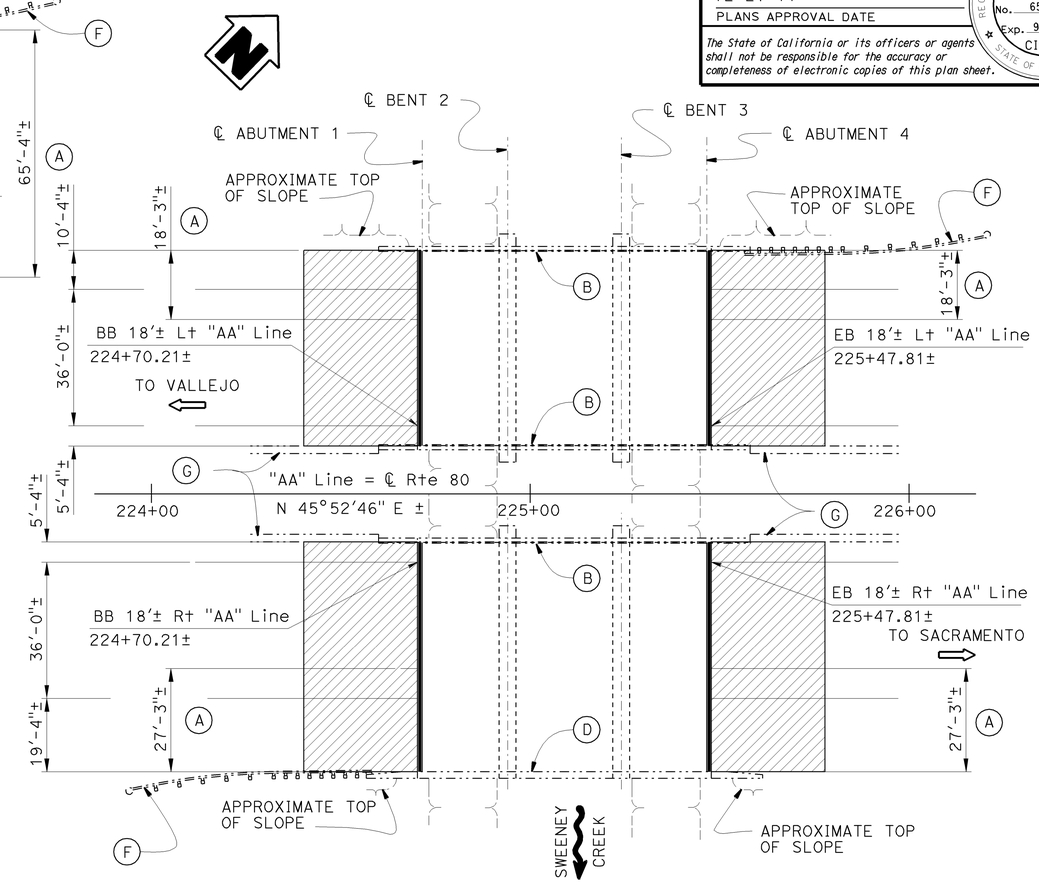


## SWEENEY CREEK BRIDGE - 23-0083R/L, PM 32.90

1" = 20'

NOTES:

(A) Paving Notch Extension Required

(B) Type 1 Barrier

(C) Face of Type 1 Without Wheel Guard Barrier

(D) Face of Type 25 Barrier

(E) Backfill voids at abutments as directed by the Engineer. See 'END DIAPHRAGM ABUTMENT SECTION' on "MISCELLANEOUS DETAILS" sheet

(F) Existing MBGR

(G) Existing Temporary Rail (Type K)

1. For Staged Construction And Traffic Control Details, see "ROADWAY PLANS"
2. Structure Approach shall match Existing Bridge Cross-Slope and Profile Grade
3. Locations of Deck and Joint Repair to be determined by the Engineer. See 'DECK REPAIR TABLE' and 'DECK AND JOINT REPAIR DETAIL' on "MISCELLANEOUS DETAILS" sheet.

NOTE:
THE CONTRACTOR SHALL VERIFY ALL CONTROLLING FIELD DIMENSIONS BEFORE ORDERING OR FABRICATING ANY MATERIAL.

STANDARD PLAN SHEET NO.
DETAIL NO.

GIBSON CANYON CREEK BRIDGE 23-0012R/L
QUANTITIES

| | | |
|---|---|---|
| REMOVE UNSOUND CONCRETE | 7 | CF |
| AGGREGATE BASE (APPROACH SLAB) | 30 | CY |
| AGGREGATE BASE (ABUTMENT) | 24 | CY |
| STRUCTURAL CONCRETE, APPROACH SLAB (TYPE R) | 298 | CY |
| PAVING NOTCH EXTENSION | 130 | CF |
| RAPID SETTING CONCRETE (PATCH) | 7 | CF |
| JOINT SEAL (MR½") | 178 | LF |
| JOINT SEAL (MR 1") | 117 | LF |

SWEENEY CREEK BRIDGE 23-0083R/L
QUANTITIES

| | | |
|---|---|---|
| REMOVE UNSOUND CONCRETE | 4 | CF |
| AGGREGATE BASE (APPROACH SLAB) | 26 | CY |
| STRUCTURAL CONCRETE, APPROACH SLAB (TYPE R) | 250 | CY |
| PAVING NOTCH EXTENSION | 68 | CF |
| RAPID SETTING CONCRETE (PATCH) | 4 | CF |
| JOINT SEAL (MR½") | 235 | LF |

LEGEND:

Indicates Existing Structure

Indicates Joint Seal Removal, Clean Joint, and place New Joint Seal. (See 'JOINT SEAL TABLE' on "MISCELLANEOUS DETAILS" sheet.)

Indicates Removal of Existing PCC Pavement and AC, and place New Structure Approach Type R(30D). See "STRUCTURE APPROACH TYPE R(30D)" sheet.

## INDEX TO PLANS


| SHEET NO. | TITLE |
|---|---|
| 1 | GENERAL PLAN NO. 1 |
| 2 | GENERAL PLAN NO. 2 |
| 3 | MISCELLANEOUS DETAILS |
| 4 | STRUCTURE APPROACH TYPE R(30D) |


## STANDARD PLANS DATED MAY 2006

| | |
|---|---|
| A10A | ACRONYMS AND ABBREVIATIONS (SHEET 1 OF 2) |
| A10B | ACRONYMS AND ABBREVIATIONS (SHEET 2 OF 2) |
| A10C | SYMBOLS (SHEET 1 OF 2) |
| A10D | SYMBOLS (SHEET 2 OF 2) |
| RSP B6-21 | JOINT SEALS (MAXIMUM MOVEMENT RATING = 2") |
| RSP P10 | CONCRETE PAVEMENT- DOWEL BAR DETAILS |

| | BY | CHECKED |
|---|---|---|
| DESIGN | Sergio Damian | Jay Quiogue |
| DETAILS | Marvin Lane | Jay Quiogue |
| QUANTITIES | Sergio Damian | Jay Quiogue |

STATE OF CALIFORNIA
DEPARTMENT OF TRANSPORTATION

DIVISION OF ENGINEERING SERVICES
STRUCTURE DESIGN
DESIGN BRANCH 4

BRIDGE NO. Various
POST MILE Various

# APPROACH SLAB AND JOINT SEAL REPLACEMENT
# ROUTE 80 BRIDGES
# GENERAL PLAN NO. 1

STRUCTURES DESIGN DETAIL SHEET (ENGLISH) (REV. 09-01-10)

ORIGINAL SCALE IN INCHES FOR REDUCED PLANS 0 1 2 3

UNIT: 3579
PROJECT NUMBER & PHASE: 0400001101 1
CONTRACT NO.: 044A0101

DISREGARD PRINTS BEARING EARLIER REVISION DATES

REVISION DATES 1-12-11 12-7-11 2-2-11

SHEET 1 OF 4

FILE => 04-4a0101-a-gp01.dgn

USERNAME => s122599 DATE PLOTTED => 22-DEC-2011 TIME PLOTTED => 10:45

| DIST | COUNTY | ROUTE | POST MILES TOTAL PROJECT | SHEET No. | TOTAL SHEETS |
|---|---|---|---|---|---|
| 04 | Sol | 80 | 30.6/38.7 | 229 | 231 |

REGISTERED CIVIL ENGINEER 12-22-11 DATE

12-27-11
PLANS APPROVAL DATE

REGISTERED PROFESSIONAL ENGINEER JAY A. QUIOGUE No. 65766 Exp. 9-30-13 CIVIL STATE OF CALIFORNIA

*The State of California or its officers or agents shall not be responsible for the accuracy or completeness of electronic copies of this plan sheet.*

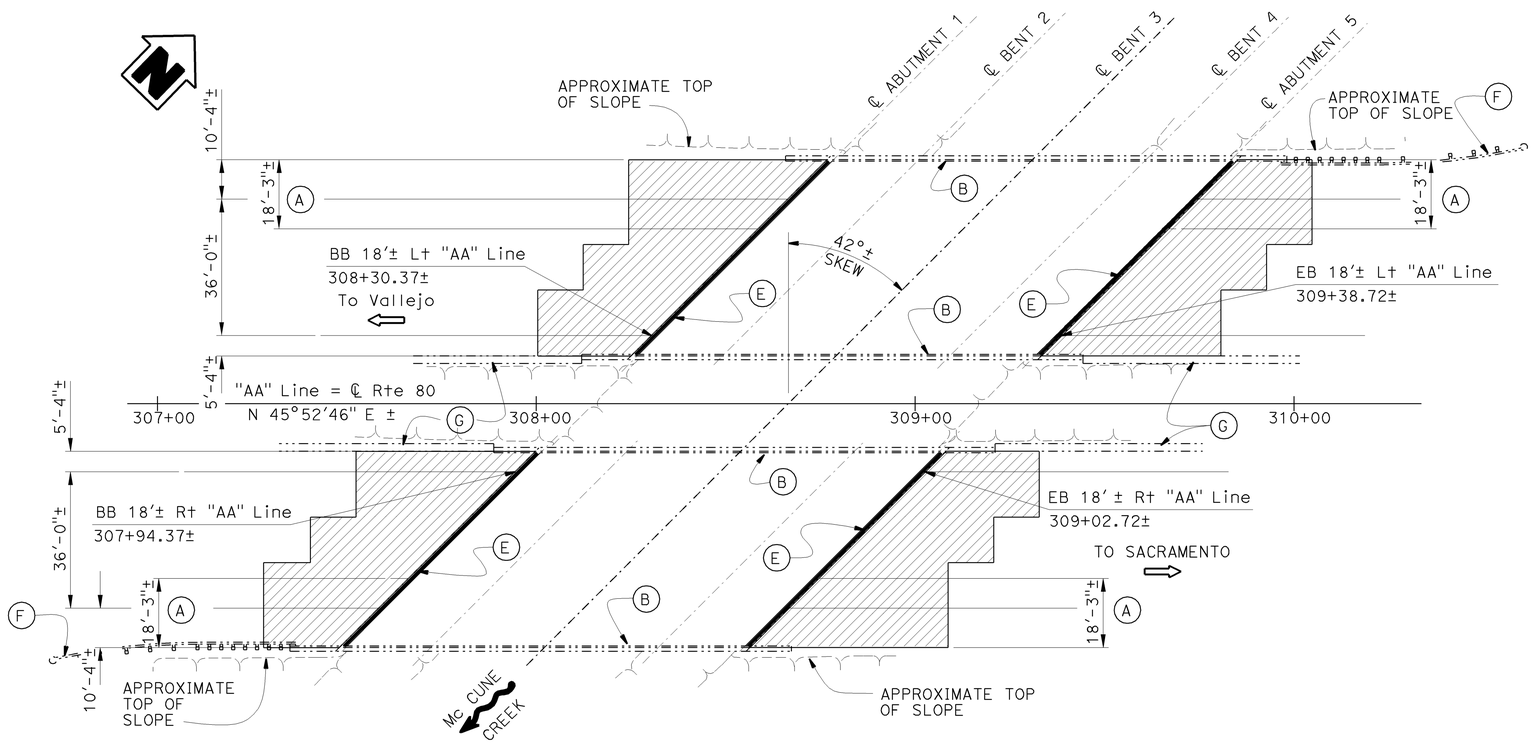


## Mc CUNE CREEK BRIDGE - 23-0084R/L, PM 34.48

1" = 20'

Mc CUNE CREEK BRIDGE 23-0084R/L
QUANTITIES

| | | |
|---|---|---|
| REMOVE UNSOUND CONCRETE | 4 | CF |
| AGGREGATE BASE (APPROACH SLAB) | 28 | CY |
| AGGREGATE BASE (ABUTMENT) | 60 | CY |
| STRUCTURAL CONCRETE, APPROACH SLAB (TYPE R) | 272 | CY |
| PAVING NOTCH EXTENSION | 54 | CF |
| RAPID SETTING CONCRETE (PATCH) | 4 | CF |
| JOINT SEAL (MR1/2") | 290 | LF |

NOTES:

(A) Paving Notch Extension Required

(B) Type 1 Barrier

(E) Backfill Voids at Abutments as directed by the Engineer. See 'END DIAPHRAGM ABUTMENT SECTION' on "MISCELLANEOUS DETAILS" sheet

(F) Existing MBGR

(G) Existing Temporary Rail (Type K)

1. For Staged Construction And Traffic Control Details, See "ROADWAY PLANS"

2. Structure Approach shall match Existing Bridge Cross-Slope and Profile Grade

3. Locations of Deck and Joint Repair to be determined by the Engineer. See 'DECK REPAIR TABLE' and 'DECK AND JOINT REPAIR DETAIL' on "MISCELLANEOUS DETAILS" sheet.

LEGEND:

-·-·-·- Indicates Existing Structure

——— Indicates Joint Seal Removal, Clean Joint, and place New Joint Seal. ( See JOINT SEAL TABLE on "MISCELLANEOUS DETAILS" sheet)

▨ Indicates Removal of Existing PCC Pavement and AC, and place New Structure Approach Type R(30D). See "STRUCTURE APPROACH TYPE R(30D)" sheet.

NOTE:
THE CONTRACTOR SHALL VERIFY ALL CONTROLLING FIELD DIMENSIONS BEFORE ORDERING OR FABRICATING ANY MATERIAL.

STANDARD PLAN SHEET NO.
DETAIL NO.

| | BY | CHECKED |
|---|---|---|
| DESIGN | Sergio Damian | Jay Quiogue |
| DETAILS | Marvin Lane | Jay Quiogue |
| QUANTITIES | Sergio Damian | Jay Quiogue |

STATE OF CALIFORNIA
DEPARTMENT OF TRANSPORTATION

DIVISION OF ENGINEERING SERVICES
STRUCTURE DESIGN
DESIGN BRANCH 4

BRIDGE NO. Various
POST MILE Various

# APPROACH SLAB AND JOINT SEAL REPLACEMENT
# ROUTE 80 BRIDGES
# GENERAL PLAN NO. 2

STRUCTURES DESIGN DETAIL SHEET (ENGLISH) (REV. 09-01-10)

ORIGINAL SCALE IN INCHES FOR REDUCED PLANS 0 1 2 3

UNIT: 3579
PROJECT NUMBER & PHASE: 0400001101 1
CONTRACT NO.: 044A0101

DISREGARD PRINTS BEARING EARLIER REVISION DATES

REVISION DATES 1-12-11 1-28-11 2-2-11 12-7-11

SHEET 2 OF 4

FILE => 04-4a0101-g-gp02.dgn

USERNAME => s122599 DATE PLOTTED => 22-DEC-2011 TIME PLOTTED => 10:46

| DIST | COUNTY | ROUTE | POST MILES TOTAL PROJECT | SHEET No. | TOTAL SHEETS |
|---|---|---|---|---|---|
| 04 | Sol | 80 | 30.6/38.7 | 230 | 231 |

REGISTERED CIVIL ENGINEER 4-3-12 DATE

12-27-11
PLANS APPROVAL DATE

REGISTERED PROFESSIONAL ENGINEER JAY A. QUIOGUE No. 65766 Exp. 9-30-13 CIVIL STATE OF CALIFORNIA

*The State of California or its officers or agents shall not be responsible for the accuracy or completeness of electronic copies of this plan sheet.*

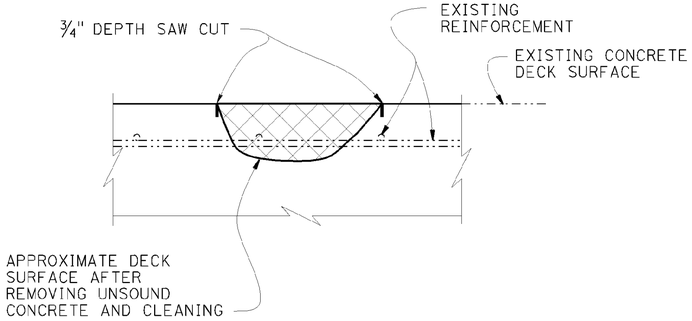


## DECK REPAIR DETAIL

No Scale

Locations to be determined by the Engineer. Reinforcement may be encountered during concrete removal and is to remain undamaged. Also see "DECK REPAIR TABLE".

NOTES:

1. When existing transverse reinforcement is exposed in the deck surface, saw cutting shall be waived with the approval of the Engineer

LEGEND:

Indicates Existing Structure

Indicates Backfill Voids with Aggregate Base (Abutment) as directed by the Engineer

Indicates Limits of Remove Existing Unsound Concrete and Place New Rapid Setting Concrete (Patch)

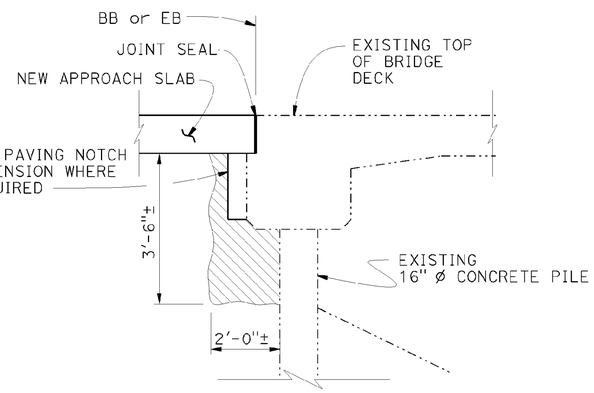


## END DIAPHRAGM ABUTMENT SECTION

No Scale

JOINT SEAL TABLE

| GENERAL PLAN No. | BRIDGE No. | LOCATION | MINIMUM "MR" (in) | Approx LENGTH (ft) | EXISTING WATERSTOP | Approx DEPTH TO CLEAN Exp JOINT (in) |
|---|---|---|---|---|---|---|
| 1 | 23-0012R | Abut 1 | 1 | 58 | No | 12 |
| | | Abut 6 | 1 | 59 | No | 12 |
| 1 | 23-0012L | Abut 1 | 1/2 | 89 | No | 12 |
| | | Abut 6 | 1/2 | 89 | No | 12 |
| 1 | 23-0083R | Abut 1 | 1/2 | 63 | No | 12 |
| | | Abut 4 | 1/2 | 64 | No | 12 |
| 1 | 23-0083L | Abut 1 | 1/2 | 54 | No | 12 |
| | | Abut 4 | 1/2 | 54 | No | 12 |
| 2 | 23-0084R | Abut 1 | 1/2 | 72 | No | 12 |
| | | Abut 5 | 1/2 | 73 | No | 12 |
| 2 | 23-0084L | Abut 1 | 1/2 | 72 | No | 12 |
| | | Abut 5 | 1/2 | 73 | No | 12 |

DECK REPAIR TABLE

| GENERAL PLAN No. | BRIDGE No. | TOTAL DECK AREA (sq ft) | Approx AREA DAMAGED (PERCENT) | Approx DEPTH DAMAGED (in) | REMOVE UNSOUND CONCRETE (cu ft) | RAPID SETTING CONCRETE (PATCH) (cu ft) |
|---|---|---|---|---|---|---|
| 1 | 23-0012R | 4901 | 1/4 | 3 | 2 | 2 |
| 1 | 23-0012L | 5864 | 1/2 | 3 | 5 | 5 |
| 1 | 23-0083R | 4708 | 1/4 | 3 | 3 | 3 |
| 1 | 23-0083L | 4009 | 1/4 | 3 | 1 | 1 |
| 2 | 23-0084R | 5599 | 1/4 | 3 | 2 | 2 |
| 2 | 23-0084L | 5599 | 1/4 | 3 | 2 | 2 |

NOTE:
THE CONTRACTOR SHALL VERIFY ALL CONTROLLING FIELD DIMENSIONS BEFORE ORDERING OR FABRICATING ANY MATERIAL.

# APPROACH SLAB AND JOINT SEAL REPLACEMENT
## ROUTE 80 BRIDGES
## MISCELLANEOUS DETAILS

| | BY | CHECKED |
|---|---|---|
| DESIGN | Sergio Damian | Jay Quiogue |
| DETAILS | Marvin Lane | Jay Quiogue |
| QUANTITIES | Sergio Damian | Jay Quiogue |

STATE OF CALIFORNIA
DEPARTMENT OF TRANSPORTATION

DIVISION OF ENGINEERING SERVICES
STRUCTURE DESIGN
DESIGN BRANCH 4

BRIDGE NO. Various
POST MILE Various

STRUCTURES DESIGN DETAIL SHEET (ENGLISH) (REV. 09-01-10)

ORIGINAL SCALE IN INCHES FOR REDUCED PLANS 0 1 2 3

UNIT: 3579
PROJECT NUMBER & PHASE: 0400001101 1
CONTRACT NO.: 044A0101

DISREGARD PRINTS BEARING EARLIER REVISION DATES

REVISION DATES 1-12-11 1-20-11 4-3-12

SHEET 3 OF 4

FILE => 04-4g01101-v-miscd1.dgn

USERNAME => s12-1131 DATE PLOTTED => 03-APR-2012 TIME PLOTTED => 10:33

| DIST | COUNTY | ROUTE | POST MILES TOTAL PROJECT | SHEET No. | TOTAL SHEETS |
|---|---|---|---|---|---|
| 04 | Sol | 80 | 30.6/38.7 | 231 | 231 |

REGISTERED CIVIL ENGINEER 12-22-11 DATE

12-27-11
PLANS APPROVAL DATE

REGISTERED PROFESSIONAL ENGINEER JAY A. QUIOGUE No. 65766 Exp. 9-30-13 CIVIL STATE OF CALIFORNIA

*The State of California or its officers or agents shall not be responsible for the accuracy or completeness of electronic copies of this plan sheet.*

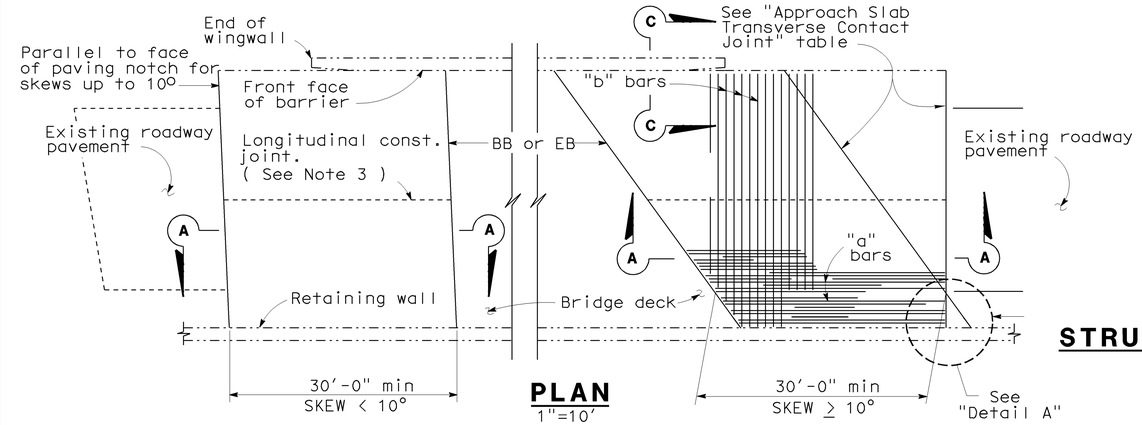


## PLAN
1"=10'

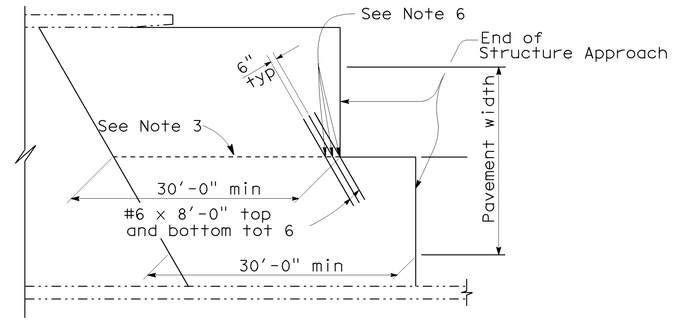


## STRUCTURE APPROACH - END STAGGER DETAIL
No Scale

| APPROACH SLAB TRANSVERSE CONTACT JOINT | | |
|---|---|---|
| APPROACH SKEW | WITH AC ROADWAY PAVEMENT | WITH PCC ROADWAY PAVEMENT |
| < 10° | Parallel to face of paving notch | Parallel to face of paving notch |
| 10° - 39° | Parallel to face of P N use (Detail A) | Stagger lines 24' to 36' apart |
| > 39° | Parallel to face of P N use (Detail A) | Stagger at each lane line |

3

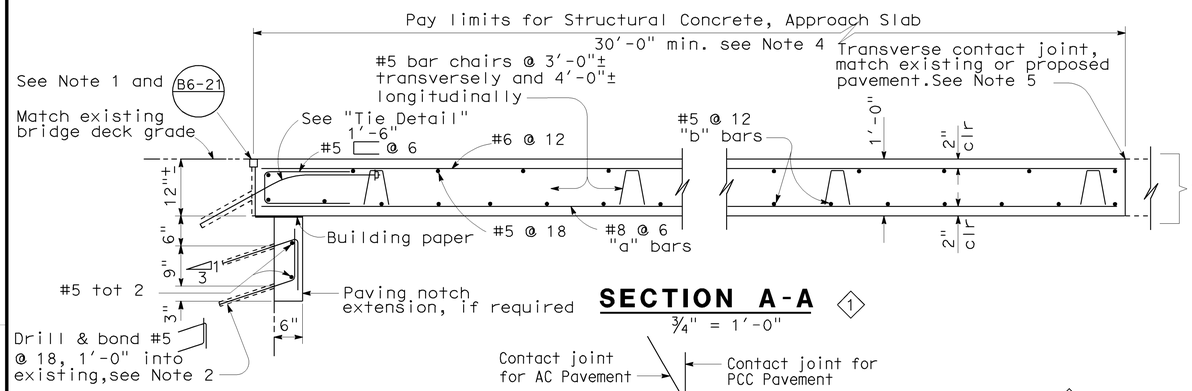


## SECTION A-A
¾" = 1'-0"

1

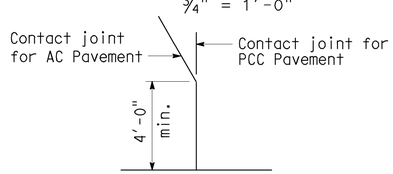


## DETAIL A
No Scale

2

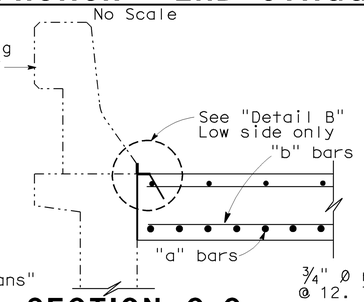


## SECTION C-C
¾" = 1'-0"

¾" ø rod x 1'-0" @ 12. Thread one end

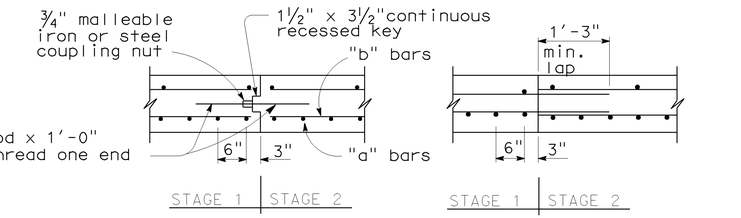


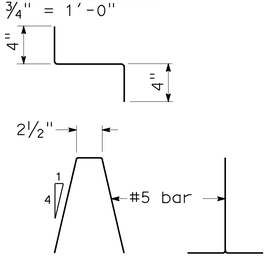


## BAR CHAIR DETAIL
1½" = 1'-0"

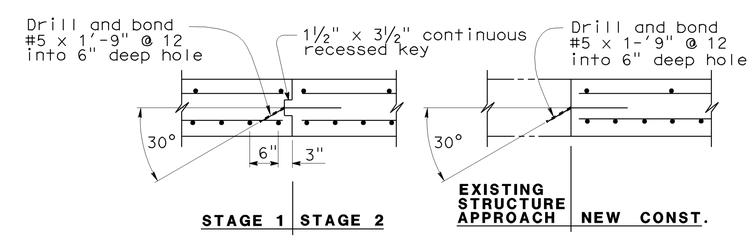


## LONGITUDINAL CONSTRUCTION JOINT ALTERNATIVES
¾" = 1'-0"

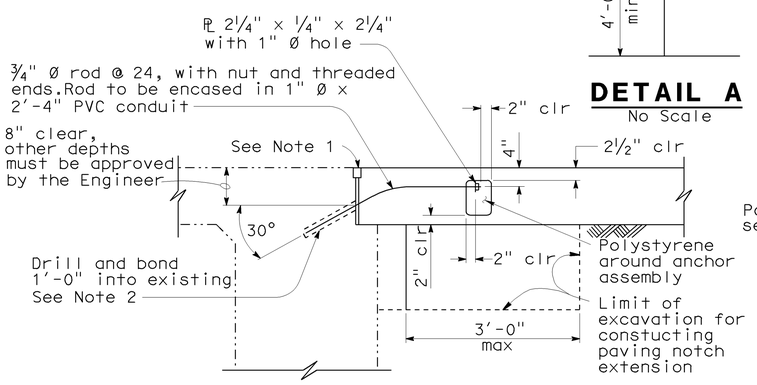


## TIE DETAIL
¾" = 1'-0"

NOTE:
THE CONTRACTOR SHALL VERIFY ALL CONTROLLING FIELD DIMENSIONS BEFORE ORDERING OR FABRICATING ANY MATERIAL.

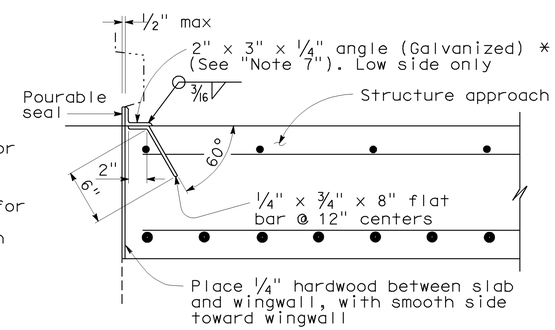


*(TO BE USED WITH TYPE 1 CONCRETE BARRIER)

1

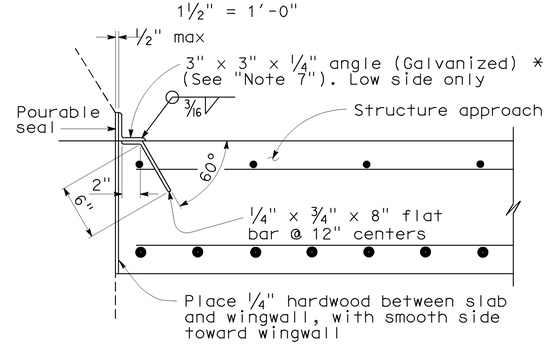


*(TO BE USED WITH TYPE 25 OR TYPE 1 WITHOUT WHEEL GUARD CONCRETE BARRIER)

1

## DETAIL B
1½" = 1'-0"

**NOTES:**

1. For details not shown or noted, see Structure Plans. Adjust bar reinforcement to clear a sawcut for sealed joint, when required.
2. Space to avoid existing prestress anchorages and main reinforcement.
3. Longitudinal construction joints, when permitted by the Engineer, shall be located on lane lines.
4. Transverse contact joint shall be a minimum of 5'-0" from an existing or constructed weakened plane joint.
5. For transverse contact joint with PCC paving, refer to Revised Standard Plan RSP P10. (4)
6. Couplers are required for stage construction.
7. End angle or plate at beginning of barrier transition, end of wingwall or end of structure approach as applicable.

## SPECIAL DETAILS

REVISED STANDARD DRAWING

FILE NO. xs3-140e

APPROVAL DATE 1-13-11

1 Modified detail
2 Deleted detail
3 Modified Table
4 Modified Note 5

STATE OF CALIFORNIA
DEPARTMENT OF TRANSPORTATION

DIVISION OF ENGINEERING SERVICES

BRIDGE NO. Various
POST MILE Various

APPROACH SLAB AND JOINT SLAB REPLACEMENT
ROUTE 80 BRIDGES
STRUCTURE APPROACH TYPE R(30D)

DS OSD 2147A (ENGLISH STANDARD DRAWING "XS" BORDER REV. (12-17-10)

ORIGINAL SCALE IN INCHES FOR REDUCED PLANS 0 1 2 3

UNIT: 3579
PROJECT NUMBER & PHASE: 0400001101 1
CONTRACT NO.: 044A0101

DISREGARD PRINTS BEARING EARLIER REVISION DATES

REVISION DATES 1-13-11 2-2-11

SHEET 4 OF 4

FILE => 04-4a10101-z-xs3140.dgn

USERNAME => s122599 DATE PLOTTED => 22-DEC-2011 TIME PLOTTED => 10:45