Dist	COUNTY	ROUTE	POST MILES TOTAL PROJECT	SHEET No.	TOTAL SHEETS
04	SCI	152	6.1/6.5	1	32

STP-S152(077)E

STATE OF CALIFORNIA
DEPARTMENT OF TRANSPORTATION

PROJECT PLANS FOR CONSTRUCTION ON
STATE HIGHWAY

IN SANTA CLARA COUNTY
IN GILROY
FROM 0.3 MILE WEST OF UVAS CREEK BRIDGE
TO 0.1 MILE EAST OF UVAS CREEK BRIDGE

TO BE SUPPLEMENTED BY STANDARD PLANS DATED MAY 2006

INDEX OF PLANS

SHEET No.	DESCRIPTION
1	TITLE AND LOCATION MAP
2	LAYOUT PLAN
3-4	PLANT LIST
5-10	PLANTING PLANS
11-16	IRRIGATION PLANS
17-19	LANDSCAPE DETAILS
20-21	IRRIGATION QUANTITIES
22	CONSTRUCTION AREA SIGNS
23-32	REVISED AND NEW STANDARD PLANS

THE STANDARD PLANS LIST APPLICABLE TO THIS CONTRACT IS INCLUDED IN THE NOTICE TO BIDDERS AND SPECIAL PROVISIONS BOOK.

LOCATION MAP

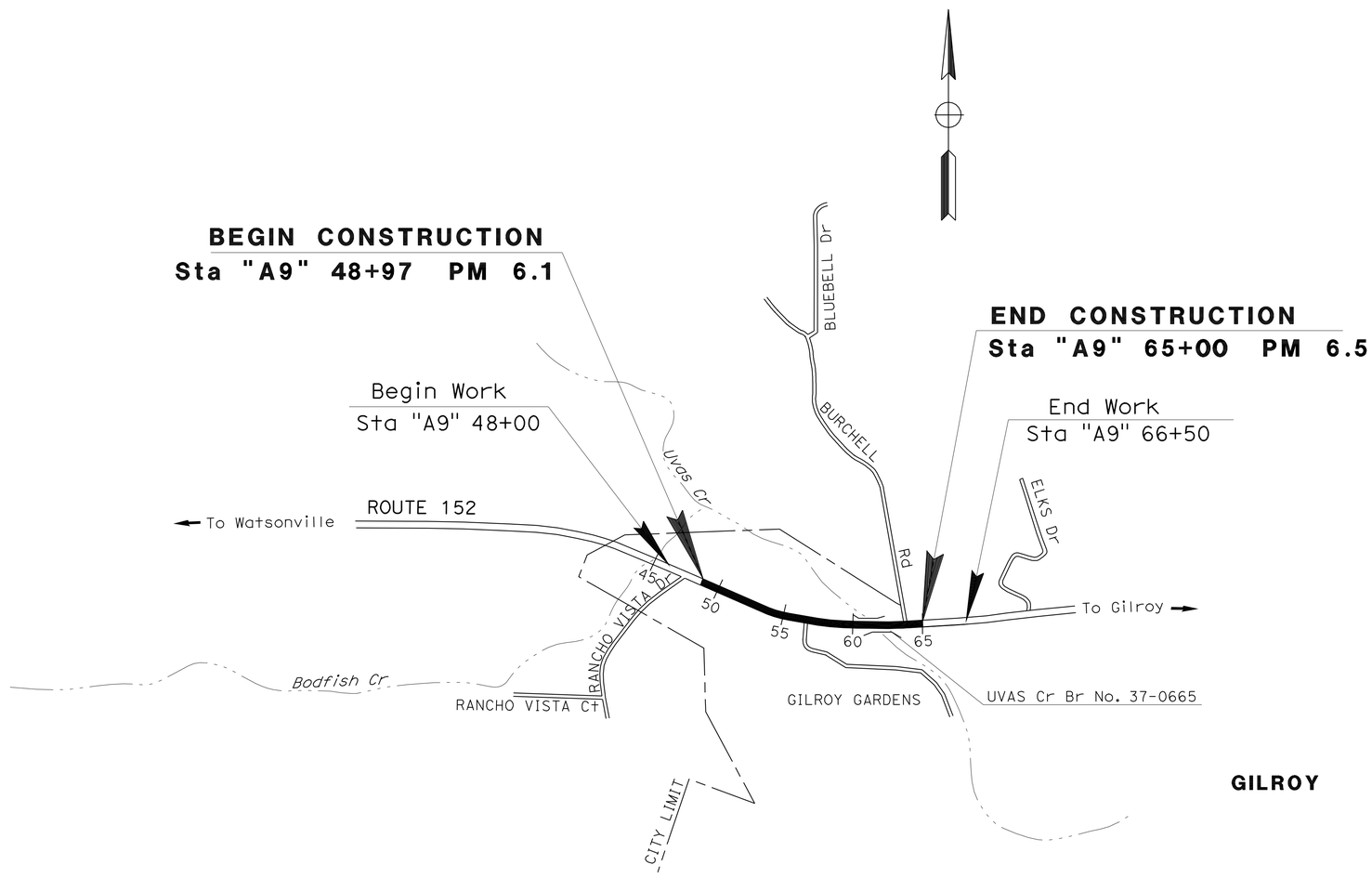

NO SCALE

THE CONTRACTOR SHALL POSSESS THE CLASS (OR CLASSES) OF LICENSE AS SPECIFIED IN THE "NOTICE TO BIDDERS."

Connie M. Yip
LICENSED LANDSCAPE ARCHITECT

LICENSED LANDSCAPE ARCHITECT
CONNIE M. YIP
NO. 4377
Signature
02-29-12
Renewal Date
5-13-11
Date
STATE OF CALIFORNIA

June 13, 2011
PLANS APPROVAL DATE

THE STATE OF CALIFORNIA OR ITS OFFICERS OR AGENTS SHALL NOT BE RESPONSIBLE FOR THE ACCURACY OR COMPLETENESS OF SCANNED COPIES OF THIS PLAN SHEET.

CONTRACT No.	04-448834
PROJECT ID	0400021235

PROJECT MANAGER: FRANCIS MENSAH
SENIOR LANDSCAPE ARCHITECT: BRYAN WALKER

LAST REVISION 00-00-00
DATE PLOTTED => 28-SEP-2011
TIME PLOTTED => 13:34

Dist	COUNTY	ROUTE	POST MILES TOTAL PROJECT	SHEET No.	TOTAL SHEETS
04	SCI	152	6.1/6.5	2	32

Parirokh Abedi 5-13-11
REGISTERED CIVIL ENGINEER DATE

6-13-11
PLANS APPROVAL DATE

REGISTERED PROFESSIONAL ENGINEER
P. Abedi
No. 36025
Exp 6-30-12
CIVIL
STATE OF CALIFORNIA

THE STATE OF CALIFORNIA OR ITS OFFICERS OR AGENTS SHALL NOT BE RESPONSIBLE FOR THE ACCURACY OR COMPLETENESS OF SCANNED COPIES OF THIS PLAN SHEET.

NOTE:

FOR ACCURATE RIGHT OF WAY DATA, CONTACT RIGHT OF WAY ENGINEERING AT THE DISTRICT OFFICE.

MINOR HOT MIX ASPHALT DIKE

STATION LIMITS	LOCATION	DIKE TYPE C	DIKE TYPE E	TRANSITION	MINOR HMA
		LF			TON
A9 54+87.6 TO 55+12.6	R†	25			0.21
A9 55+12.6 TO 55+15.7	R†			3	0.1
A9 55+15.7 TO 55+31.4	R†		54		1.5
A9 56+15.6 TO 55+90.8	R†	25			0.21
A9 55+90.8 TO 55+88.6	R†			3	0.1
A9 55+88.6 TO 55+77.6	R†		70		1.9
	TOTAL	50	130		4.0

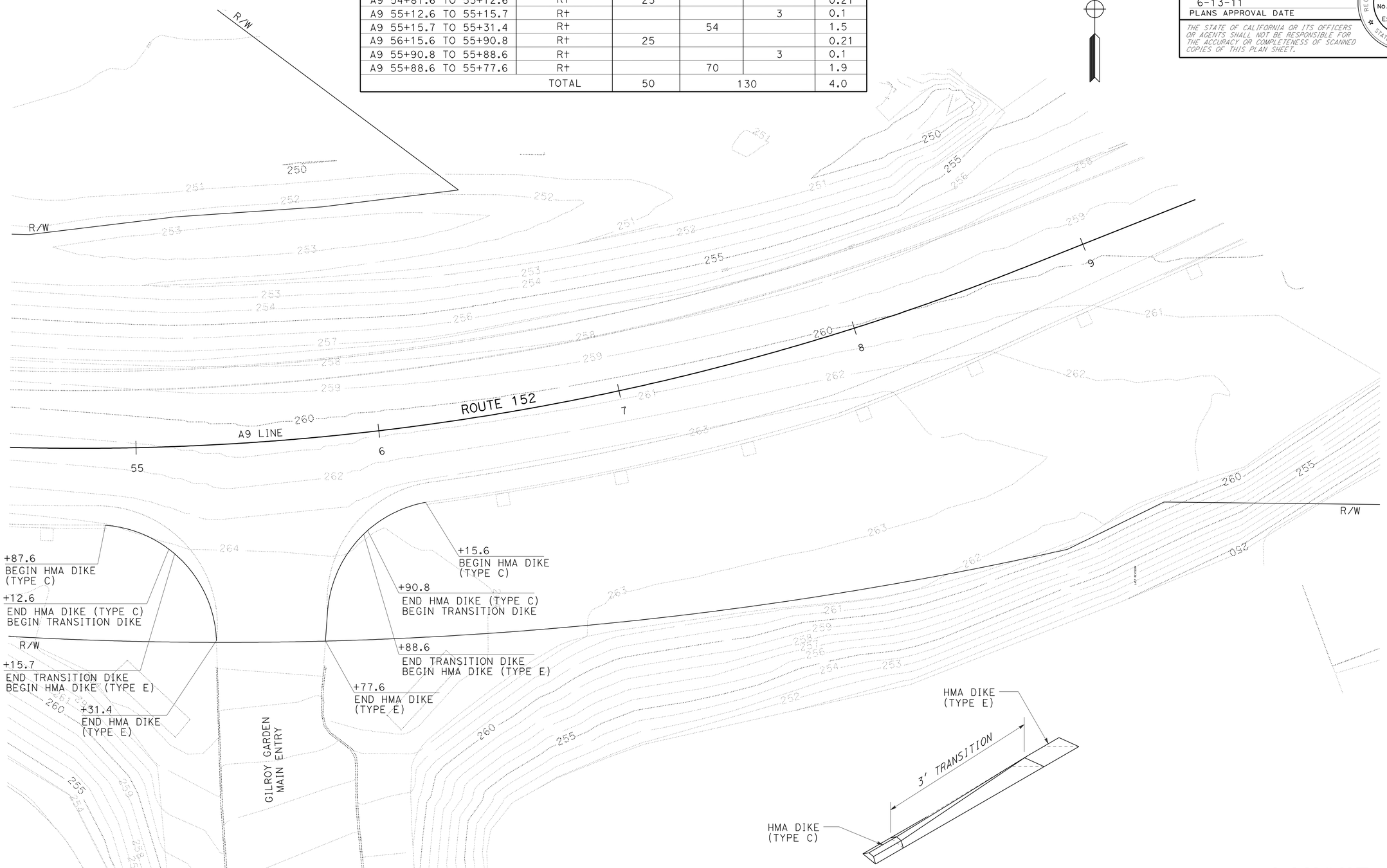

TRANSITION FROM
HMA DIKE (TYPE C) TO HMA DIKE (TYPE E)
NO SCALE

LAYOUT

SCALE: 1" = 20'

L-1

STATE OF CALIFORNIA - DEPARTMENT OF TRANSPORTATION
Caltrans
DESIGN

FUNCTIONAL SUPERVISOR: MORTEZA AZIMI
CALCULATED-DESIGNED BY: PARIROKH ABEDI
CHECKED BY: PARIROKH ABEDI
REVISED BY
DATE REVISED

DATE PLOTTED => 25-AUG-2011
TIME PLOTTED => 13:05

Dist	COUNTY	ROUTE	POST MILES TOTAL PROJECT	SHEET No.	TOTAL SHEETS
04	SCI	152	6.1/6.5	3	32

LICENSED LANDSCAPE ARCHITECT

6-13-11
PLANS APPROVAL DATE

LICENSED LANDSCAPE ARCHITECT — CONNIE M. YIP No. 4371 — Signature 02-29-12 Renewal Date — 05-13-11 Date — STATE OF CALIFORNIA

THE STATE OF CALIFORNIA OR ITS OFFICERS OR AGENTS SHALL NOT BE RESPONSIBLE FOR THE ACCURACY OR COMPLETENESS OF SCANNED COPIES OF THIS PLAN SHEET.

PLANT LIST AND PLANTING SPECIFICATIONS

PLANT GROUP	PLANT No.	SYMBOL	BOTANICAL NAME	COMMON NAME	SIZE	QUANTITY EACH	HOLE SIZE (INCH) Dia	HOLE SIZE (INCH) DEPTH	BASIN TYPE	IRON SULFATE	SOIL AMEND ①	COMMERCIAL FERTILIZER ① PLANTING	COMMERCIAL FERTILIZER ① PLT ESTB	BASIN MULCH ②	STAKING OR GUYING	PLANTING LIMITS MINIMUM DISTANCE (ft) FROM ETW	Pvmt	FENCE	WALL	PAVED DITCH	EARTH DITCH	ON CENTER (ft)	REMARKS
A	1		JUNIPERUS HORIZONTALIS "WILTONII"	WILTONS JUNIPER	No. 1	545	24"	24"	II	-	1 CF	2 Pkt	1 Oz	1.8 CF	-	-	4	4	4	4	4	5	SHRUB
	2		RHUS TYPHINA 'BAILTIGER'	TIGER EYES SUMAC	No. 1	302	24"	24"	II	-	1 CF	2 Pkt	1 Oz	1.8 CF	-	-	5	6	6	6	4	5	SHRUB
B	3		PHORMIUM TENAX 'JUBILEE'	JUBILEE NEW ZEALAND FLAX	No. 5	64	30"	30"	II	-	2 CF	3 Pkt	2.5 Oz	1.8 CF	-	-	5	-	-	5	4	4	SHRUB
	4		CORDYLINE AUSTRALIS 'SUNRISE'	SUNRISE CORDYLINE	No. 5	472	30"	30"	II	-	2 CF	3 Pkt	2.5 Oz	1.8 CF	-	-	5	4	4	3	3	3.5	SHRUB
F	5		FESTUCA OVINA 'GLAUCA'	BLUE FESCUE	FLATS	4052	③	③	-	-	-	-	0.5 Oz	-	-	-	3	3	3	3	4	1	GROUNDCOVER
J	6		CEDRUS DEODARA	DEODAR CEDAR	60" BOX	10	72"	72"	II	-	10 CF	16 Pkt	20 Oz	1.8 CF	④	30	-	20	20	10	10	22	⑫
	7		CEDRUS DEODARA 'AUREA'	GOLDEN DEODAR CEDAR	60" BOX	10	72"	72"	II	-	10 CF	16 Pkt	20 Oz	1.8 CF	④	30	-	20	20	10	10	16	⑫
	8		LAGERSTROEMIA INDICA 'TUSCARORA'	CRAPE MYRTLE	54" BOX	25	72"	72"	II	-	10 CF	16 Pkt	16 Oz	1.8 CF	④	-	15	20	20	10	10	7	⑫
K	9		CEDRUS DEODARA	DEODAR CEDAR	24" BOX	29	48"	48"	II	-	5 CF	8 Pkt	8 Oz	1.8 CF	④	30	-	20	20	10	10	22	TREE
	10		CEDRUS DEODARA 'AUREA'	GOLDEN DEODAR CEDAR	24" BOX	18	48"	48"	II	-	5 CF	8 Pkt	8 Oz	1.8 CF	④	30	-	20	20	10	10	16	TREE
	11		GINKGO BILOBA 'PRINCETON SENTRY'	PRINCETON SENTRY MAIDENHAIR TREE	24" BOX	65	48"	48"	II	-	5 CF	8 Pkt	8 Oz	1.8 CF	④	-	15	20	20	10	10	17	TREE (MALE ONLY)
	12		LAGERSTROEMIA INDICA 'TUSCARORA'	CRAPE MYRTLE	24" BOX	26	48"	48"	II	-	5 CF	8 Pkt	8 Oz	1.8 CF	④	-	15	20	20	10	10	7	TREE (STANDARD)
T	13		FESTUCA ARUNDINACEA AND POA PRATENSIS	TALL FESCUE AND KENTUCKY BLUEGRASS MIX	TURF (SOD)	⑦	-	-	-	-	-	4.5 Lb/ 1000 SF	4.5 Lb/ 1000 SF	-	-	-	2	1	1	1	2	-	⑤

APPLICABLE WHEN CIRCLED:

① - QUANTITIES SHOWN ARE "PER PLANT" UNLESS SHOWN AS SQFT OR SQYD APPLICATION RATES
② - BASIN MULCH IS INCLUDED WITH MULCH QUANTITIES SHOWN ON PLANTING PLAN
③ - SUFFICIENT TO RECEIVE ROOT BALL AND AMENDMENTS IF REQUIRED
④ - SEE DETAIL
⑤ - SEE SPECIAL PROVISIONS
6 - SEE STANDARD SPECIFICATIONS
⑦ - AS SHOWN ON PLANS
8 - UNLESS OTHERWISE SHOWN ON PLANS
9 - FOLIAGE PROTECTOR REQUIRED
10 - ROOT PROTECTOR REQUIRED
11 - ROOT BARRIER REQUIRED
⑫ - STATE-FURNISHED

NOTE:

UNDERLINED PORTIONS OF BOTANICAL NAME INDICATE ABBREVIATIONS USED ON PLANTING PLANS.

PLANT LIST

PL-1

REVISED BY | DATE REVISED
CONNIE YIP | BRYAN WALKER
CALCULATED-DESIGNED BY | CHECKED BY
SENIOR LANDSCAPE ARCHITECT: BRYAN WALKER
STATE OF CALIFORNIA - DEPARTMENT OF TRANSPORTATION
Caltrans® LANDSCAPE ARCHITECTURE

LAST REVISION 05-13-11 | DATE PLOTTED => 25-AUG-2011 | TIME PLOTTED => 13:05

Dist	COUNTY	ROUTE	POST MILES TOTAL PROJECT	SHEET No.	TOTAL SHEETS
04	SCI	152	6.1/6.5	4	32

LICENSED LANDSCAPE ARCHITECT

6-13-11
PLANS APPROVAL DATE

Laurie J. Smith No. 4062 — Signature — 8-31-12 Renewal Date — 05-13-11 Date — LICENSED LANDSCAPE ARCHITECT — STATE OF CALIFORNIA

THE STATE OF CALIFORNIA OR ITS OFFICERS OR AGENTS SHALL NOT BE RESPONSIBLE FOR THE ACCURACY OR COMPLETENESS OF SCANNED COPIES OF THIS PLAN SHEET.

MITIGATION PLANT LIST AND PLANTING SPECIFICATIONS

PLANT GROUP	PLANT No.	SYMBOL	BOTANICAL NAME	COMMON NAME	SIZE	QUANTITY EACH	HOLE SIZE (INCH) Dia	HOLE SIZE (INCH) DEPTH	BASIN TYPE	IRON SULFATE ①	SOIL AMEND ①	COMMERCIAL FERTILIZER ①	COMMERCIAL FERTILIZER ① PLANTING PLT ESTB ②	BASIN MULCH (CY)	STAKING	PLANTING LIMITS MINIMUM DISTANCE (ft) FROM ETW	Pvmt	FENCE	WALL	PAVED DITCH	EARTH DITCH	ON CENTER (ft)	REMARKS
I	13		AESCULUS CALIFONICA	CALIFORNIA BUCKEYE	POT (17)	16	③	③	II	-	-	-	-	1.8 CF	-	35	-	20	20	10	12	⑦	TREE ⑨
	14		ALNUS RHOMBIFOLIA	WHITE ALDER	POT (17)	6	③	③	II	-	-	-	-	1.8 CF	-	30	-	20	20	10	12	⑦	TREE
	15		ARTEMESIA CALIFORNICA	CALIFORNIA SAGEBRUSH	POT (15)	11	③	③	II	-	-	-	-	1.8 CF	-	-	8	8	8	8	10	④	SHRUB
	16		BACCHARIS SALCIFOLIOUS	MULEFAT	POT (15)	66	③	③	II	-	-	-	-	1.8 CF	-	-	6	6	6	6	8	④	SHRUB
	17		FRAXINUS LATIFOLIA	OREGON ASH	POT (17)	8	③	③	II	-	-	-	-	1.8 CF	-	40	-	15	15	15	17	⑦	TREE ⑨
	18		HETEROMELES ARBUTIFOLIA	TOYON	POT (15)	613	③	③	II	-	-	-	-	1.8 CF	-	-	15	15	10	10	12	④	SHRUB ⑨④
	19		LEYMUS TRITICOIDES	CREEPING WILD RYE	POT (15)	360	③	③	II	-	-	-	-	1.8 CF	-	-	3	3	3	3	3	④	GRASS ④
	20		PINUS PONDEROSA	PONDEROSA PINE	POT (17)	6	③	③	II	-	-	-	-	1.8 CF	-	40	-	20	20	10	12	⑦	TREE ⑨
	21		PLATANUS RACEMOSA	WESTERN SYCAMORE	POT (17)	27	③	③	II	-	-	-	-	1.8 CF	-	40	-	20	20	10	12	⑦	TREE
	22		POPULUS FREMONTII	FREMONT COTTONWOOD	POT (17)	19	③	③	II	-	-	-	-	1.8 CF	-	40	-	20	20	20	22	⑦	TREE
	23		QUERCUS AGRIFOLIA	COAST LIVE OAK	POT (17)	32	③	③	II	-	-	-	-	1.8 CF	-	30	-	20	15	15	12	⑦	TREE ⑨
	24		QUERCUS LOBATA	VALLEY OAK	POT (17)	8	③	③	II	-	-	-	-	1.8 CF	-	30	-	20	20	20	22	⑦	TREE
	25		ROSA CALIFORNICA	CALIFORNIA ROSE	POT (15)	83	③	③	II	-	-	-	-	1.8 CF	-	-	15	15	15	13	8	④	SHRUB ⑨④
	26		RUBUS URSINUS	CALIFORNIA BLACKBERRY	POT (15)	48	③	③	II	-	-	-	-	1.8 CF	-	-	8	8	8	8	10	④	SHRUB ⑨④
	27		SAMBUCUS MEXICANA	BLUE ELDERBERRY	POT (17)	26	③	③	II	-	-	-	-	1.8 CF	-	-	15	15	15	15	17	⑦	TREE
	28		SCIRPUS MICROCARPUS	BULLRUSH	POT (15)	232	③	③	II	-	-	-	-	1.8 CF	-	-	3	3	3	3	3	④	GRASS ④
	29		SYMPHORICARPUS ALBUS	SNOWBERRY	POT (15)	580	③	③	II	-	-	-	-	1.8 CF	-	-	15	10	10	10	12	④	SHRUB ⑨④
	30		UMBELLULARIA CALIFORNICA	CALIFORNIA BAY	POT (17)	6	③	③	II	-	-	-	-	1.8 CF	-	40	-	30	30	20	22	⑦	TREE ⑨
W	31		SALIX SPP	WILLOW	CUTTING	70	③	③	II	-	-	-	-	1.8 CF	-	30	-	15	15	13	8	⑦	TREE

APPLICABLE WHEN CIRCLED:

① - QUANTITIES SHOWN ARE "PER PLANT" UNLESS SHOWN AS SQFT OR SQYD APPLICATION RATES
② - BASIN MULCH IS INCLUDED WITH MULCH QUANTITIES SHOWN ON PLANTING PLAN
③ - SUFFICIENT TO RECEIVE ROOT BALL AND AMENDMENTS IF REQUIRED
④ - SEE DETAIL
5 - SEE SPECIAL PROVISIONS
6 - SEE STANDARD SPECIFICATIONS
⑦ - AS SHOWN ON PLANS
8 - UNLESS OTHERWISE SHOWN ON PLANS
⑨ - FOLIAGE PROTECTOR REQUIRED
10 - ROOT PROTECTOR REQUIRED
11 - ROOT BARRIER REQUIRED
12 - STATE-FURNISHED

13
14 - 2" dia X 7" long
⑮ - 1½" dia X 8" long
16 - 8" X 8" X 18" long
⑰ - 4" X 4" X 14" long

NOTE:
UNDERLINED PORTIONS OF BOTANICAL NAME INDICATE ABBREVIATIONS USED ON PLANTING PLANS.

PLANT LIST
PL-2

STATE OF CALIFORNIA - DEPARTMENT OF TRANSPORTATION
Caltrans
WATER QUALITY
CONSULTANT SENIOR LANDSCAPE ARCHITECT: DAVID W YAM
CALCULATED-DESIGNED BY: LAURIE J SMITH
CHECKED BY: ALEX MC DONALD
REVISED BY / DATE REVISED

LAST REVISION 05-10-11 | DATE PLOTTED => 25-AUG-2011 | TIME PLOTTED => 13:05

Dist	COUNTY	ROUTE	POST MILES TOTAL PROJECT	SHEET No.	TOTAL SHEETS
04	SCI	152	6.1/6.5	5	32

LICENSED LANDSCAPE ARCHITECT

6-13-11
PLANS APPROVAL DATE

THE STATE OF CALIFORNIA OR ITS OFFICERS OR AGENTS SHALL NOT BE RESPONSIBLE FOR THE ACCURACY OR COMPLETENESS OF SCANNED COPIES OF THIS PLAN SHEET.

LICENSED LANDSCAPE ARCHITECT
CONNIE M. YIP
No. 4371
Signature
02-29-12
Renewal Date
05-13-11
Date
STATE OF CALIFORNIA

NOTE:

FOR ACCURATE RIGHT OF WAY DATA, CONTACT RIGHT OF WAY ENGINEERING AT THE DISTRICT OFFICE.

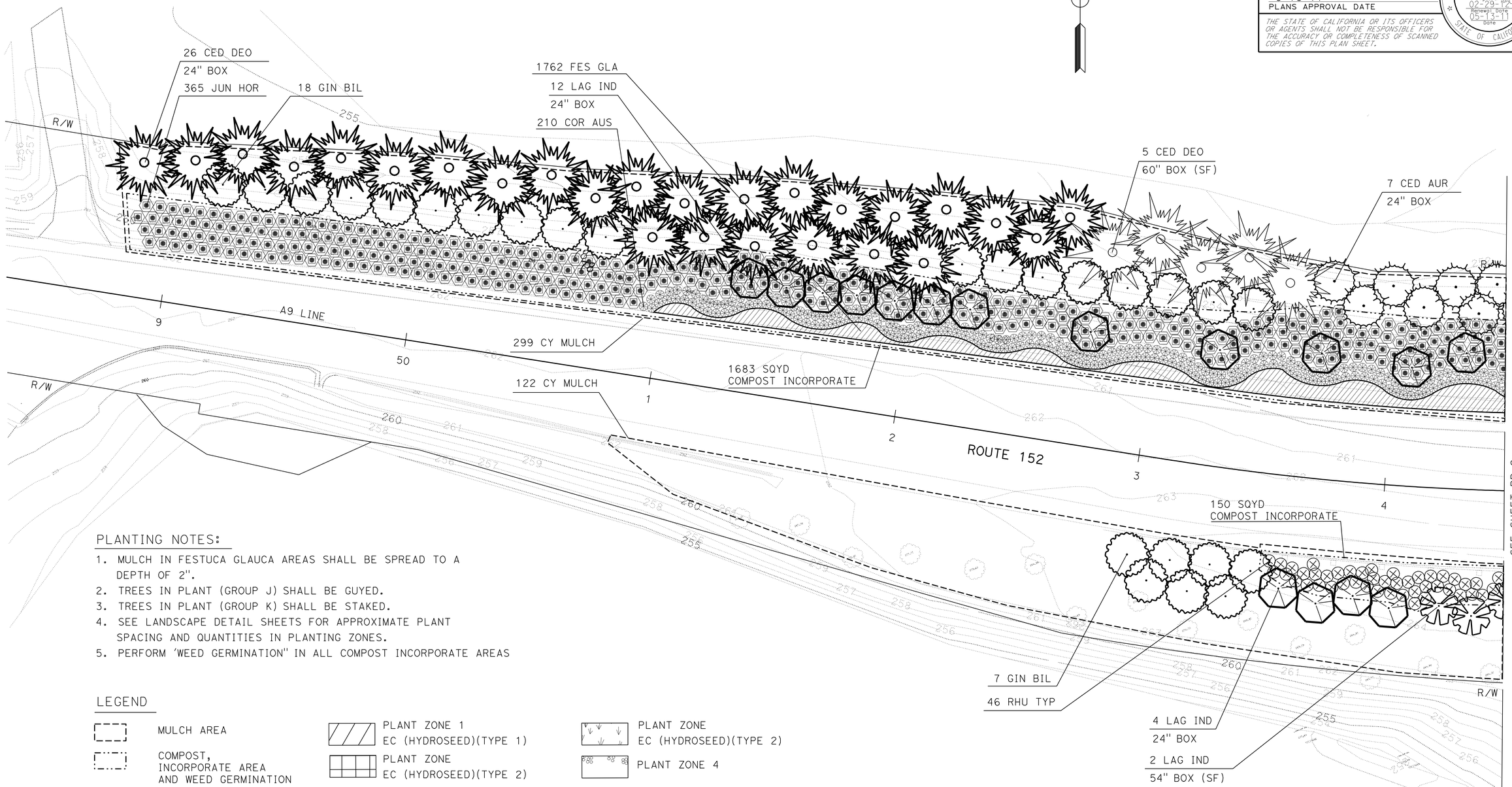

PLANTING NOTES:

1. MULCH IN FESTUCA GLAUCA AREAS SHALL BE SPREAD TO A DEPTH OF 2".
2. TREES IN PLANT (GROUP J) SHALL BE GUYED.
3. TREES IN PLANT (GROUP K) SHALL BE STAKED.
4. SEE LANDSCAPE DETAIL SHEETS FOR APPROXIMATE PLANT SPACING AND QUANTITIES IN PLANTING ZONES.
5. PERFORM 'WEED GERMINATION" IN ALL COMPOST INCORPORATE AREAS

LEGEND

- MULCH AREA
- COMPOST, INCORPORATE AREA AND WEED GERMINATION
- ENVIRONMENTALLY SENSITIVE AREA (ESA)
- PLANT ZONE 1 EC (HYDROSEED)(TYPE 1)
- PLANT ZONE EC (HYDROSEED)(TYPE 2)
- PLANT ZONE EC (HYDROSEED)(TYPE 2)
- PLANT ZONE 4

THIS PLAN ACCURATE FOR PLANTING WORK ONLY

PLANTING PLAN

SCALE: 1" = 20' **PP-1**

STATE OF CALIFORNIA - DEPARTMENT OF TRANSPORTATION
Caltrans® LANDSCAPE ARCHITECTURE

SENIOR LANDSCAPE ARCHITECT: BRYAN WALKER

CALCULATED-DESIGNED BY: CONNIE YIP
CHECKED BY: BRYAN WALKER

REVISED BY
DATE REVISED

LAST REVISION 00-00-00
DATE PLOTTED => 25-AUG-2011
TIME PLOTTED => 13:06

Dist	COUNTY	ROUTE	POST MILES TOTAL PROJECT	SHEET No.	TOTAL SHEETS
04	SCI	152	6.1/6.5	6	32

LICENSED LANDSCAPE ARCHITECT

6-13-11
PLANS APPROVAL DATE

LICENSED LANDSCAPE ARCHITECT
CONNIE M. YIP
No. 4371
Signature
02-29-12
Renewal Date
5/19/11
Date
STATE OF CALIFORNIA

THE STATE OF CALIFORNIA OR ITS OFFICERS OR AGENTS SHALL NOT BE RESPONSIBLE FOR THE ACCURACY OR COMPLETENESS OF SCANNED COPIES OF THIS PLAN SHEET.

NOTE:

FOR ACCURATE RIGHT OF WAY DATA, CONTACT
RIGHT OF WAY ENGINEERING AT THE DISTRICT OFFICE.

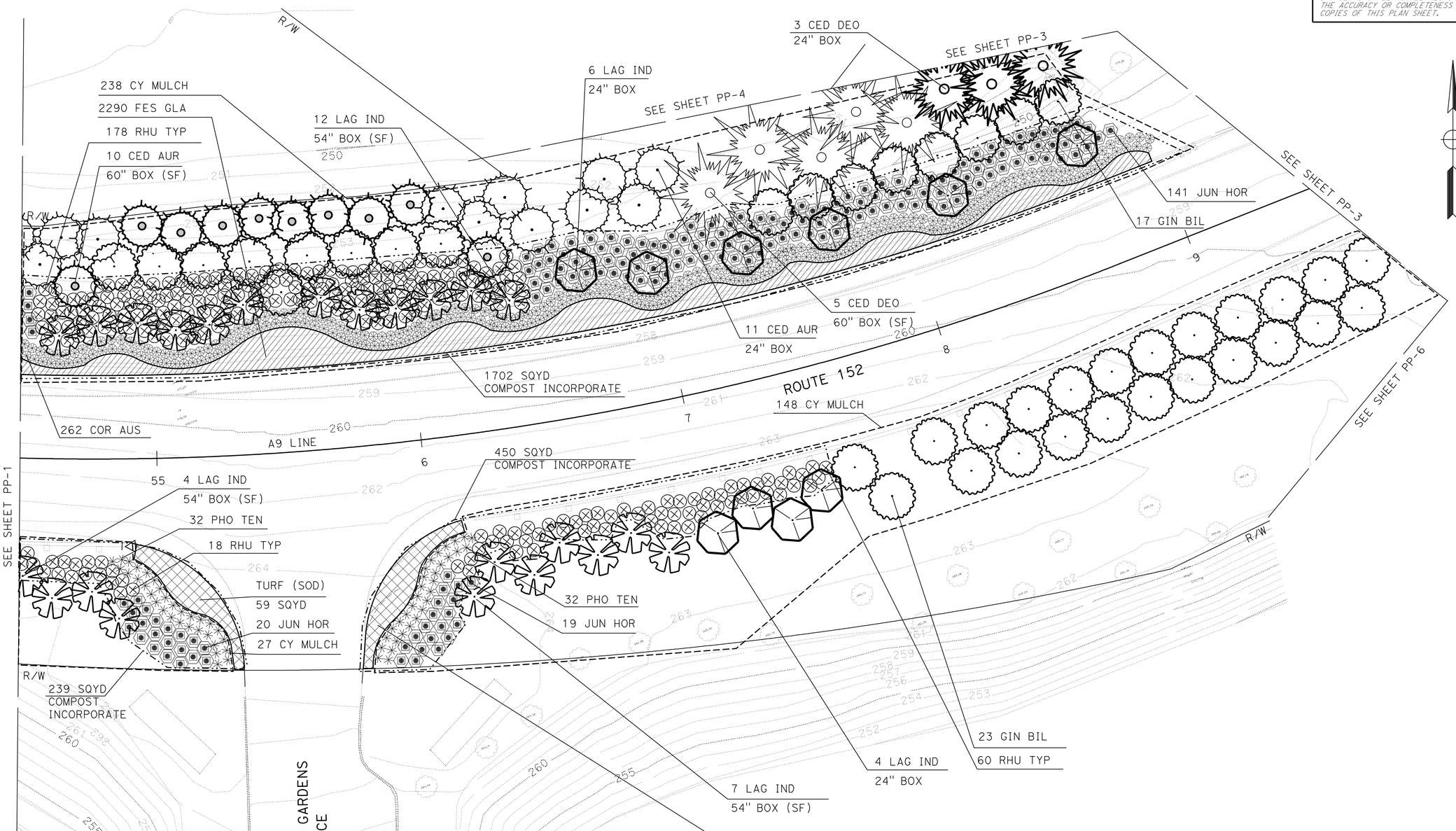

THIS PLAN ACCURATE FOR PLANTING WORK ONLY

PLANTING PLAN

SCALE: 1" = 20′ **PP-2**

STATE OF CALIFORNIA - DEPARTMENT OF TRANSPORTATION
Caltrans® LANDSCAPE ARCHITECTURE

SENIOR LANDSCAPE ARCHITECT: BRYAN WALKER

CALCULATED-DESIGNED BY: CONNIE YIP
CHECKED BY: BRYAN WALKER

REVISED BY | DATE REVISED

LAST REVISION 00-00-00 | DATE PLOTTED => 25-AUG-2011 | TIME PLOTTED => 13:06

Dist	COUNTY	ROUTE	POST MILES TOTAL PROJECT	SHEET No.	TOTAL SHEETS
04	SCI	152	6.1/6.5	7	32

LICENSED LANDSCAPE ARCHITECT

6-13-11
PLANS APPROVAL DATE

LICENSED LANDSCAPE ARCHITECT
Laurie J. Smith No. 3084
Signature
8-31-12
Renewal Date
5-13-11
Date
STATE OF CALIFORNIA

THE STATE OF CALIFORNIA OR ITS OFFICERS OR AGENTS SHALL NOT BE RESPONSIBLE FOR THE ACCURACY OR COMPLETENESS OF SCANNED COPIES OF THIS PLAN SHEET.

NOTE:

FOR ACCURATE RIGHT OF WAY DATA, CONTACT
RIGHT OF WAY ENGINEERING AT THE DISTRICT OFFICE.

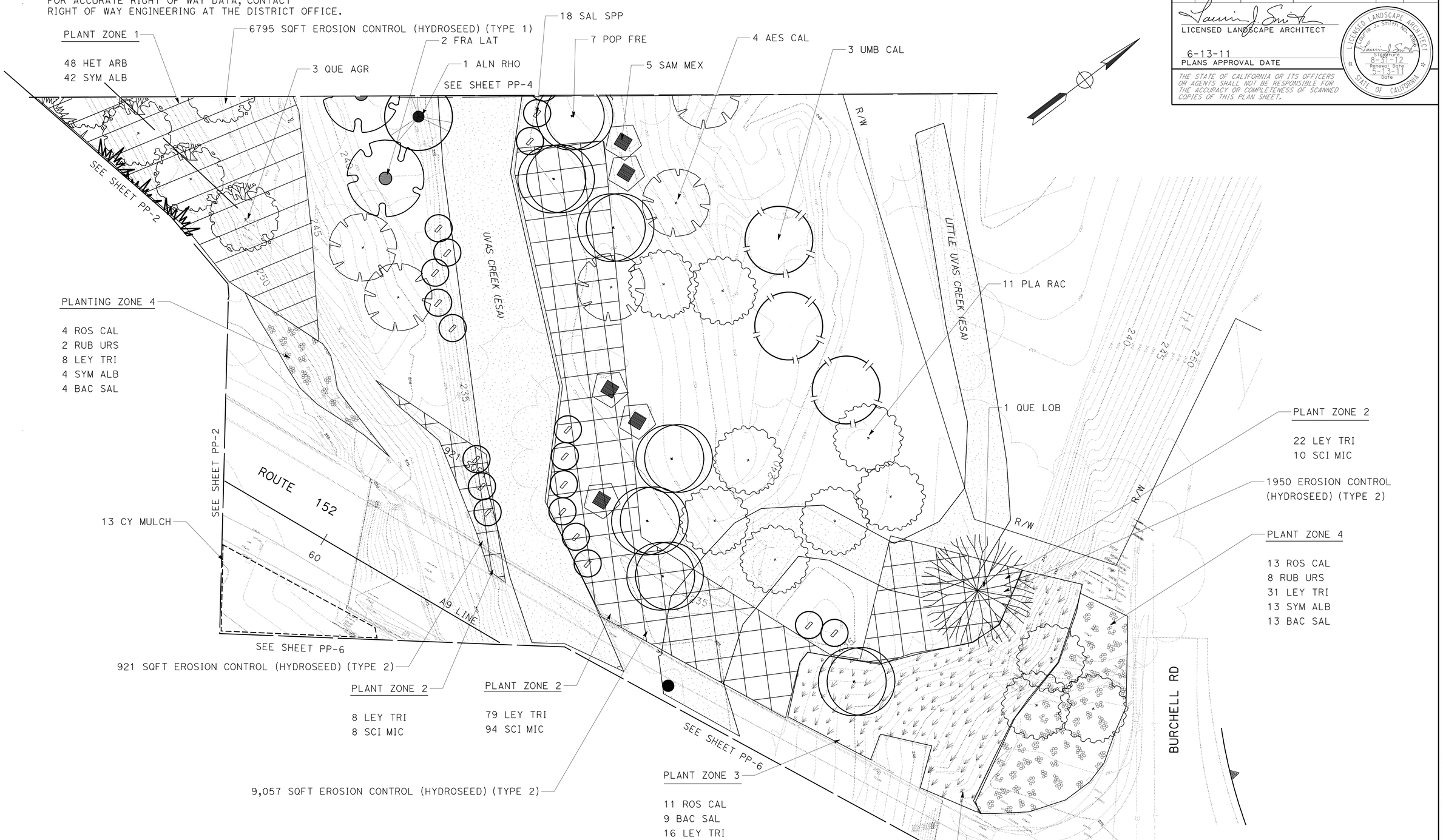

THIS PLAN ACCURATE FOR PLANTING WORK ONLY

PLANTING PLAN

(UVAS CREEK MITIGATION)

SCALE: 1" = 20'

PP-3

REVISED BY	DATE REVISED
LAURIE J SMITH	ALEX MC DONALD

CALCULATED-DESIGNED BY / CHECKED BY

SENIOR LANDSCAPE ARCHITECT: DAVID W. YAM

STATE OF CALIFORNIA - DEPARTMENT OF TRANSPORTATION

Caltrans®

WATER QUALITY

LAST REVISION 05-10-11 | DATE PLOTTED => 25-AUG-2011 | TIME PLOTTED => 13:06

Dist	COUNTY	ROUTE	POST MILES TOTAL PROJECT	SHEET No.	TOTAL SHEETS
04	SCI	152	6.1/6.5	8	32

LICENSED LANDSCAPE ARCHITECT

6-13-11
PLANS APPROVAL DATE

LICENSED LANDSCAPE ARCHITECT
Laurie J. Smith No. 3042
Signature
8-31-12
Renewal Date
5-13-11
Date
STATE OF CALIFORNIA

THE STATE OF CALIFORNIA OR ITS OFFICERS OR AGENTS SHALL NOT BE RESPONSIBLE FOR THE ACCURACY OR COMPLETENESS OF SCANNED COPIES OF THIS PLAN SHEET.

NOTE:

FOR ACCURATE RIGHT OF WAY DATA, CONTACT RIGHT OF WAY ENGINEERING AT THE DISTRICT OFFICE.

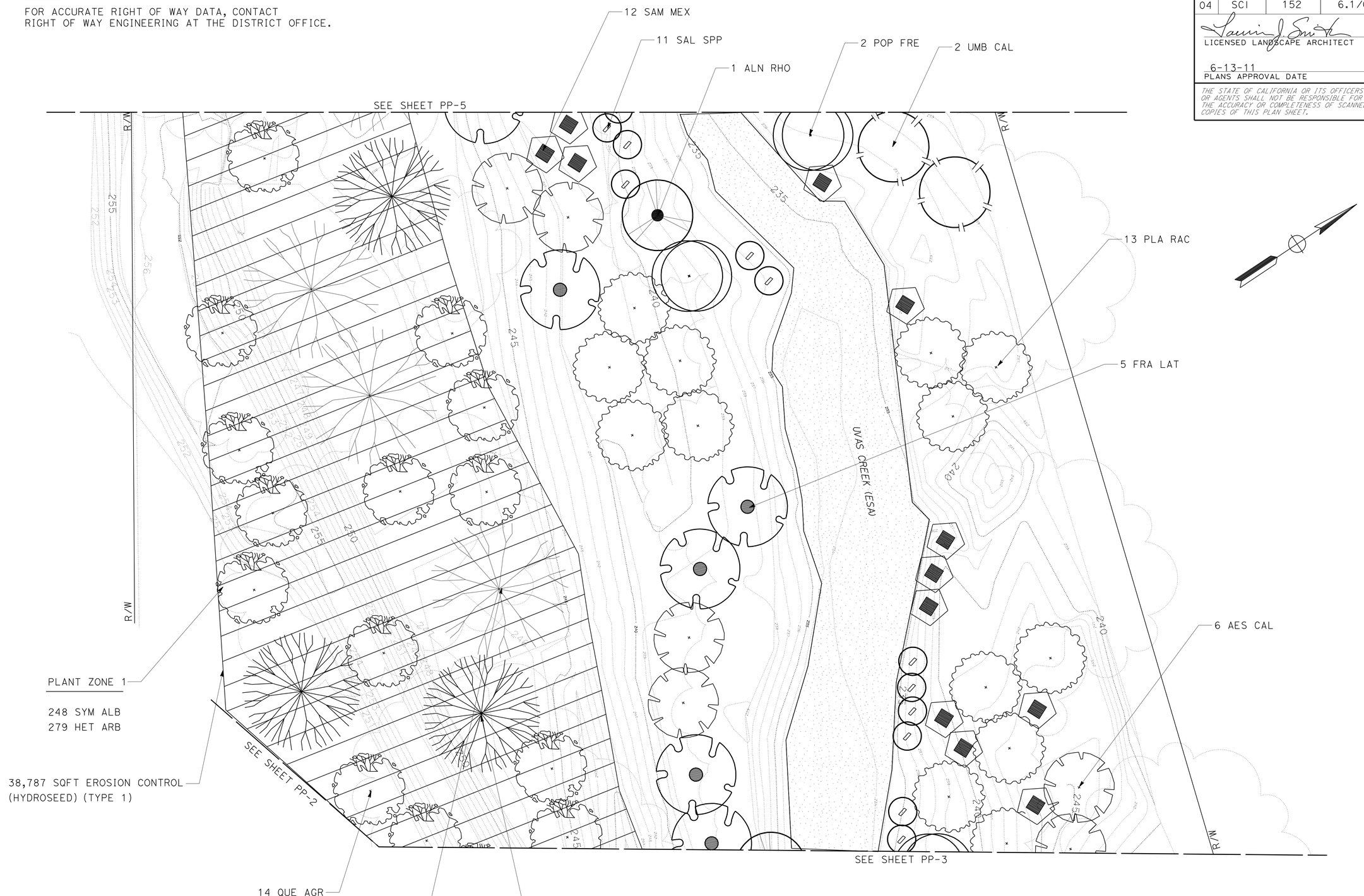

THIS PLAN ACCURATE FOR PLANTING WORK ONLY

PLANTING PLAN

(UVAS CREEK MITIGATION)

SCALE: 1" = 20'

PP-4

STATE OF CALIFORNIA - DEPARTMENT OF TRANSPORTATION
Caltrans®
WATER QUALITY

SENIOR LANDSCAPE ARCHITECT: DAVID W. YAM

CALCULATED-DESIGNED BY: LAURIE J SMITH
CHECKED BY: ALEX MC DONALD

REVISED BY
DATE REVISED

LAST REVISION 05-10-11
DATE PLOTTED => 25-AUG-2011
TIME PLOTTED => 13:06

Dist	COUNTY	ROUTE	POST MILES TOTAL PROJECT	SHEET No.	TOTAL SHEETS
04	SCI	152	6.1/6.5	9	32

LICENSED LANDSCAPE ARCHITECT

6-13-11
PLANS APPROVAL DATE

Laurie J. Smith No. 3062
Signature
8-31-12
Renewal Date
5-13-11
Date
LICENSED LANDSCAPE ARCHITECT
STATE OF CALIFORNIA

THE STATE OF CALIFORNIA OR ITS OFFICERS OR AGENTS SHALL NOT BE RESPONSIBLE FOR THE ACCURACY OR COMPLETENESS OF SCANNED COPIES OF THIS PLAN SHEET.

NOTE:

FOR ACCURATE RIGHT OF WAY DATA, CONTACT RIGHT OF WAY ENGINEERING AT THE DISTRICT OFFICE.

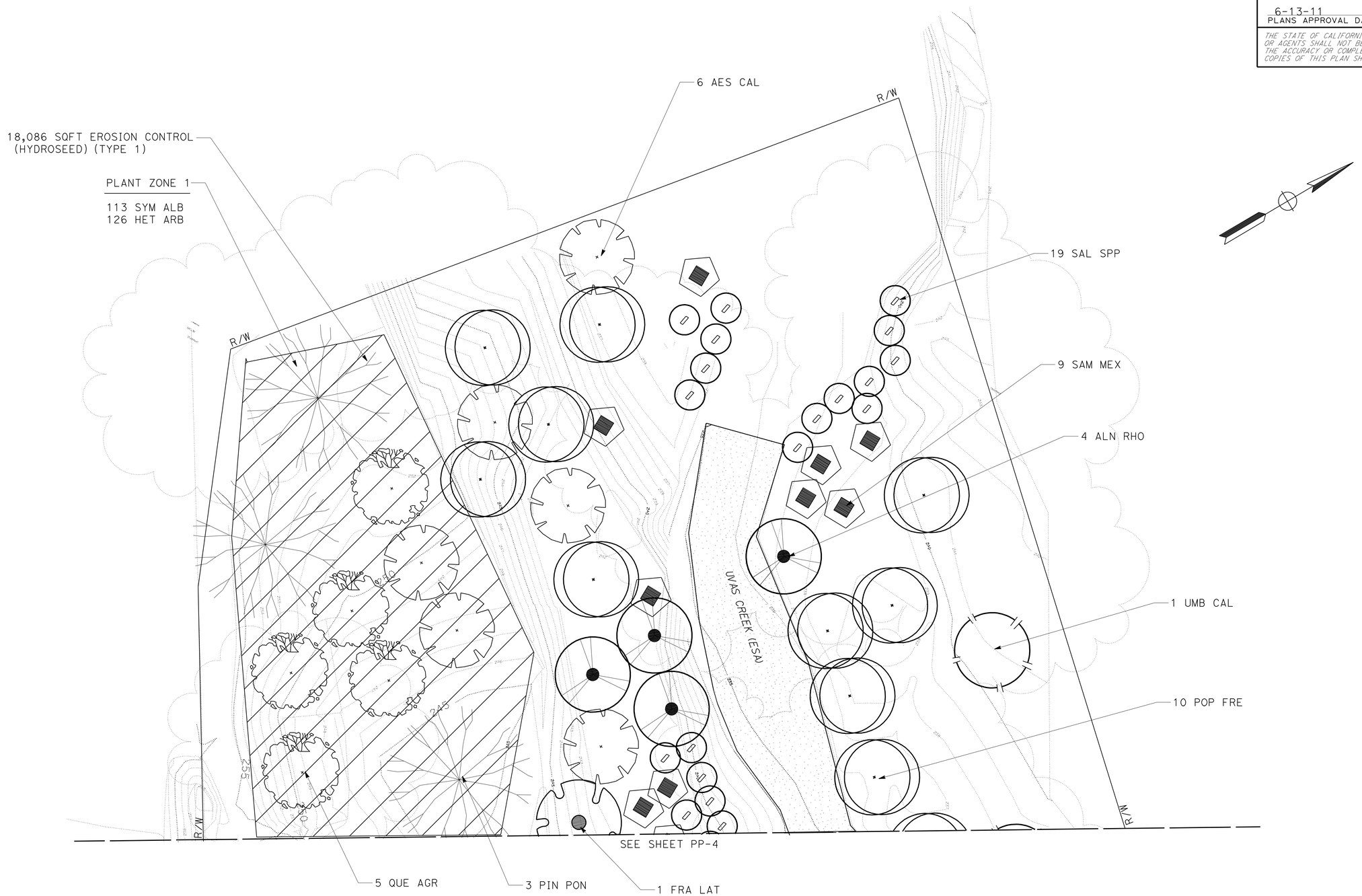

PLANTING PLAN

(UVAS CREEK MITIGATION)

SCALE: 1" = 20'

PP-5

THIS PLAN ACCURATE FOR PLANTING WORK ONLY

STATE OF CALIFORNIA - DEPARTMENT OF TRANSPORTATION

Caltrans

WATER QUALITY

SENIOR LANDSCAPE ARCHITECT: DAVID W. YAM

CALCULATED-DESIGNED BY: LAURIE J SMITH

CHECKED BY: ALEX MC DONALD

REVISED BY

DATE REVISED

LAST REVISION 05-10-11

DATE PLOTTED => 25-AUG-2011

TIME PLOTTED => 13:06

Dist	COUNTY	ROUTE	POST MILES TOTAL PROJECT	SHEET No.	TOTAL SHEETS
04	SCI	152	6.1/6.5	10	32

LICENSED LANDSCAPE ARCHITECT

6-13-11
PLANS APPROVAL DATE

LICENSED LANDSCAPE ARCHITECT
Laurie J. Smith No. 3042
Signature
8-31-12
Renewal Date
5-13-11
Date
STATE OF CALIFORNIA

THE STATE OF CALIFORNIA OR ITS OFFICERS OR AGENTS SHALL NOT BE RESPONSIBLE FOR THE ACCURACY OR COMPLETENESS OF SCANNED COPIES OF THIS PLAN SHEET.

NOTE:

FOR ACCURATE RIGHT OF WAY DATA, CONTACT
RIGHT OF WAY ENGINEERING AT THE DISTRICT OFFICE.

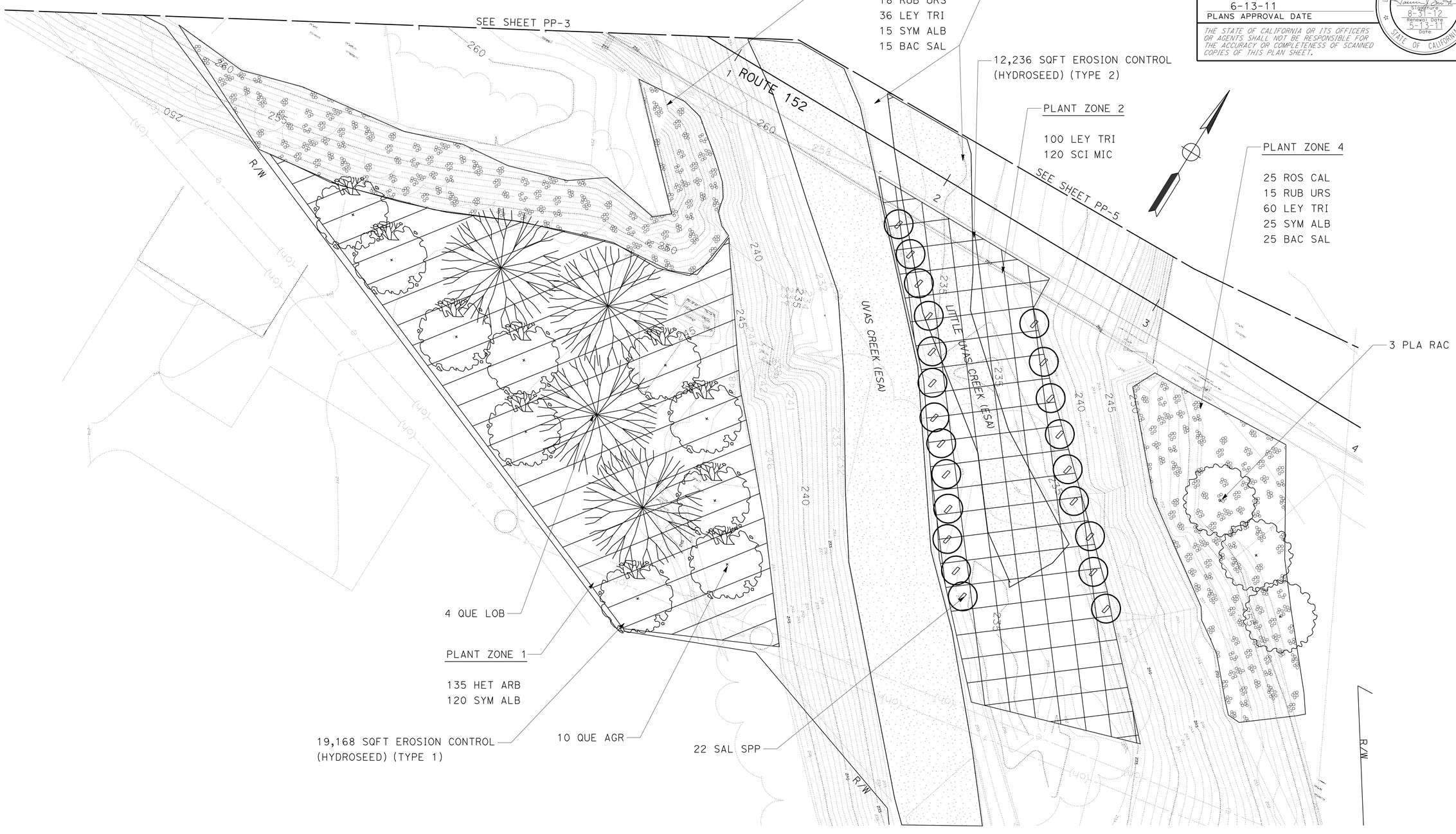

PLANTING PLAN
(UVAS CREEK MITIGATION)

SCALE: 1"= 20'

PP-6

THIS PLAN ACCURATE FOR PLANTING WORK ONLY

STATE OF CALIFORNIA - DEPARTMENT OF TRANSPORTATION
Caltrans®
WATER QUALITY

SENIOR LANDSCAPE ARCHITECT: DAVID W. YAM

CALCULATED-DESIGNED BY: LAURIE J SMITH
CHECKED BY: ALEX MC DONALD

REVISED BY
DATE REVISED

LAST REVISION 05-10-11
DATE PLOTTED => 25-AUG-2011
TIME PLOTTED => 13:06

Dist	COUNTY	ROUTE	POST MILES TOTAL PROJECT	SHEET No.	TOTAL SHEETS
04	SCI	152	6.1/6.5	11	32

LICENSED LANDSCAPE ARCHITECT

6-13-11
PLANS APPROVAL DATE

LICENSED LANDSCAPE ARCHITECT
CONNIE M. YIP
No. 4371
Signature
02-29-12
Renewal Date
5-13-11
Date
STATE OF CALIFORNIA

THE STATE OF CALIFORNIA OR ITS OFFICERS OR AGENTS SHALL NOT BE RESPONSIBLE FOR THE ACCURACY OR COMPLETENESS OF SCANNED COPIES OF THIS PLAN SHEET.

NOTE:

FOR ACCURATE RIGHT OF WAY DATA, CONTACT RIGHT OF WAY ENGINEERING AT THE DISTRICT OFFICE.

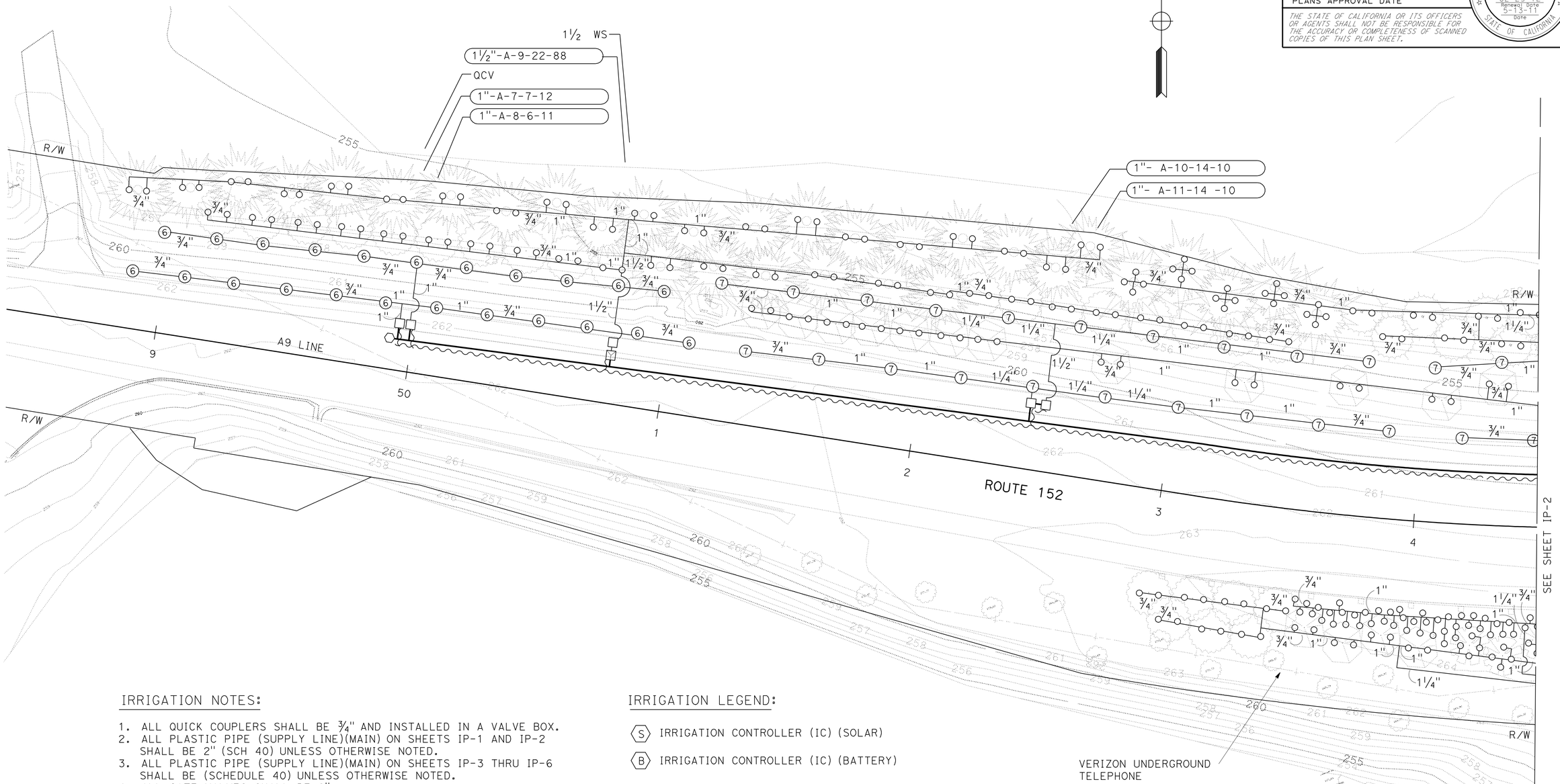

IRRIGATION NOTES:

1. ALL QUICK COUPLERS SHALL BE ¾" AND INSTALLED IN A VALVE BOX.
2. ALL PLASTIC PIPE (SUPPLY LINE)(MAIN) ON SHEETS IP-1 AND IP-2 SHALL BE 2" (SCH 40) UNLESS OTHERWISE NOTED.
3. ALL PLASTIC PIPE (SUPPLY LINE)(MAIN) ON SHEETS IP-3 THRU IP-6 SHALL BE (SCHEDULE 40) UNLESS OTHERWISE NOTED.
4. ALL GATE VALVES SHALL BE 2".
5. ALL PLANT (GROUP J) SHALL RECEIVE FOUR SPRINKLER (TYPE C-2) EQUALLY SPACED IN PLANT BASIN.
6. CHECK VALVES SHALL BE THE SAME SIZE AS THE PIPELINE WHICH THE VALVE SERVES.
7. ADJUST IRRIGATION SYSTEM TO AVOID SF DUSKY WOODRAT NESTS (ESA).
8. IRRIGATION FACILITIES SHOWN ON SHEETS IP-3 TO IP-6 SHALL BE TEMPORARY AND SHALL BE REMOVED IN CONFORMANCE WITH THE SPECIAL PROVISIONS BEFORE THE ACCEPTANCE OF THE CONTRACT.

IRRIGATION LEGEND:

(S) IRRIGATION CONTROLLER (IC) (SOLAR)

(B) IRRIGATION CONTROLLER (IC) (BATTERY)

THIS PLAN ACCURATE FOR IRRIGATION WORK ONLY

IRRIGATION PLAN

SCALE: 1" = 20'

IP-1

STATE OF CALIFORNIA - DEPARTMENT OF TRANSPORTATION
Caltrans® LANDSCAPE ARCHITECTURE

SENIOR LANDSCAPE ARCHITECT: BRYAN WALKER

CALCULATED-DESIGNED BY: CONNIE YIP
CHECKED BY: BRYAN WALKER

REVISED BY
DATE REVISED

LAST REVISION 00-00-00
DATE PLOTTED => 25-AUG-2011
TIME PLOTTED => 13:07

Dist	COUNTY	ROUTE	POST MILES TOTAL PROJECT	SHEET No.	TOTAL SHEETS
04	SCI	152	6.1/6.5	12	32

LICENSED LANDSCAPE ARCHITECT

6-13-11
PLANS APPROVAL DATE

LICENSED LANDSCAPE ARCHITECT
CONNIE M. YIP
No. 4371
Signature
02-29-12
Renewal Date
5-13-11
Date
STATE OF CALIFORNIA

THE STATE OF CALIFORNIA OR ITS OFFICERS OR AGENTS SHALL NOT BE RESPONSIBLE FOR THE ACCURACY OR COMPLETENESS OF SCANNED COPIES OF THIS PLAN SHEET.

NOTE:

FOR ACCURATE RIGHT OF WAY DATA, CONTACT
RIGHT OF WAY ENGINEERING AT THE DISTRICT OFFICE.

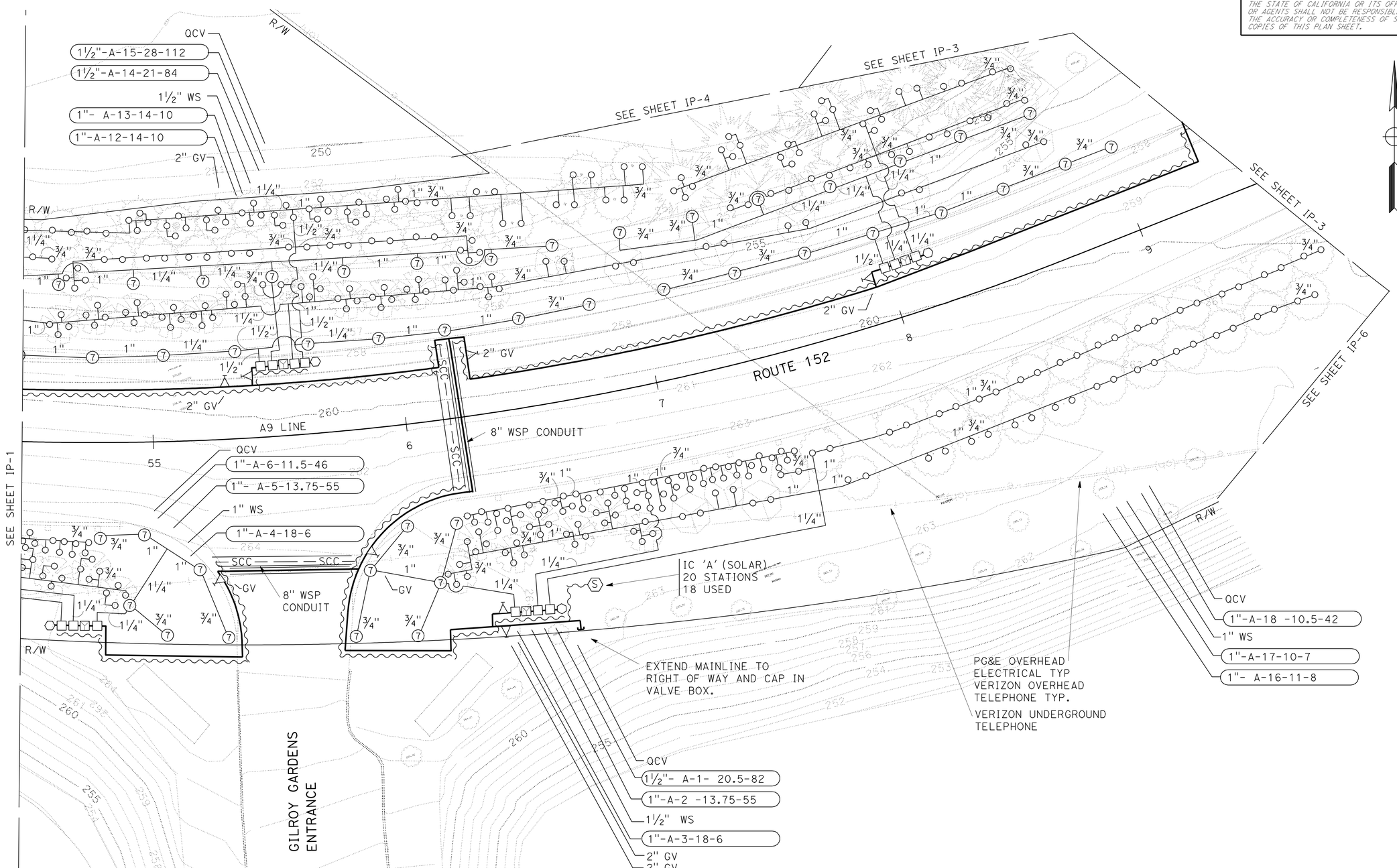

THIS PLAN ACCURATE FOR IRRIGATION WORK ONLY

IRRIGATION PLAN

SCALE: 1" = 20'

IP-2

STATE OF CALIFORNIA - DEPARTMENT OF TRANSPORTATION
Caltrans® LANDSCAPE ARCHITECTURE

SENIOR LANDSCAPE ARCHITECT: BRYAN WALKER

CALCULATED-DESIGNED BY: CONNIE YIP
CHECKED BY: BRYAN WALKER

REVISED BY
DATE REVISED

LAST REVISION 00-00-00
DATE PLOTTED => 25-AUG-2011
TIME PLOTTED => 13:07

Dist	COUNTY	ROUTE	POST MILES TOTAL PROJECT	SHEET No.	TOTAL SHEETS
04	SCI	152	6.1/6.5	13	32

LICENSED LANDSCAPE ARCHITECT

6-13-11
PLANS APPROVAL DATE

LICENSED LANDSCAPE ARCHITECT
Laurie J. Smith No. 3084
Signature
8-31-12
Renewal Date
5-13-11
Date
STATE OF CALIFORNIA

THE STATE OF CALIFORNIA OR ITS OFFICERS OR AGENTS SHALL NOT BE RESPONSIBLE FOR THE ACCURACY OR COMPLETENESS OF SCANNED COPIES OF THIS PLAN SHEET.

NOTE:

FOR ACCURATE RIGHT OF WAY DATA, CONTACT RIGHT OF WAY ENGINEERING AT THE DISTRICT OFFICE.

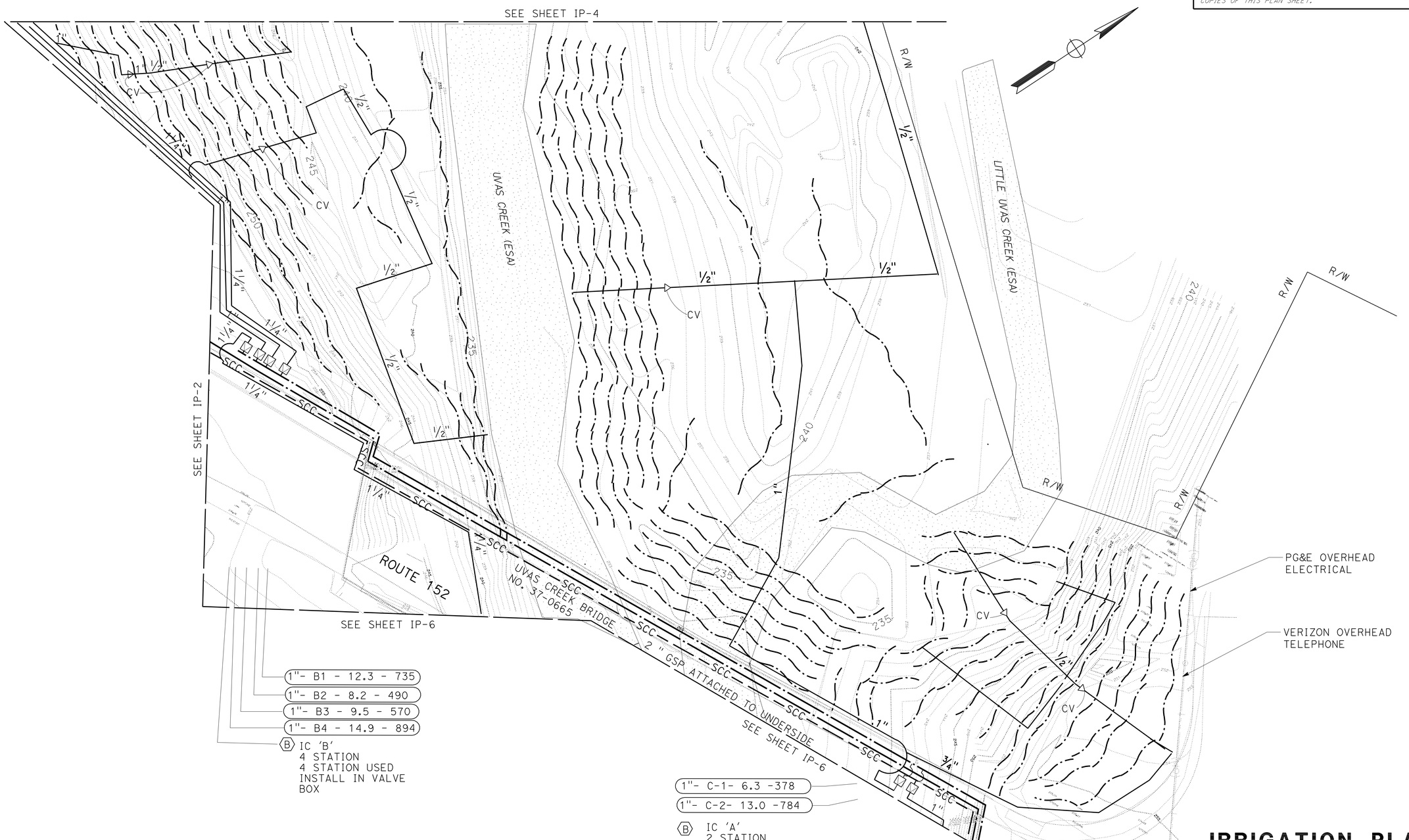

THIS PLAN ACCURATE FOR IRRIGATION WORK ONLY

IRRIGATION PLAN

(UVAS CREEK MITIGATION)

SCALE: 1" = 20'

IP-3

STATE OF CALIFORNIA - DEPARTMENT OF TRANSPORTATION
Caltrans®
WATER QUALITY

SENIOR LANDSCAPE ARCHITECT: DAVID W. YAM

CALCULATED-DESIGNED BY: LAURIE J SMITH
CHECKED BY: ALEX MC DONALD

REVISED BY
DATE REVISED

LAST REVISION 05-10-11
DATE PLOTTED => 25-AUG-2011
TIME PLOTTED => 13:07

Dist	COUNTY	ROUTE	POST MILES TOTAL PROJECT	SHEET No.	TOTAL SHEETS
04	SCI	152	6.1/6.5	14	32

LICENSED LANDSCAPE ARCHITECT

6-13-11
PLANS APPROVAL DATE

Laurie J. Smith No. 3894
Signature
8-31-12
Renewal Date
5-13-11
Date
LICENSED LANDSCAPE ARCHITECT
STATE OF CALIFORNIA

THE STATE OF CALIFORNIA OR ITS OFFICERS OR AGENTS SHALL NOT BE RESPONSIBLE FOR THE ACCURACY OR COMPLETENESS OF SCANNED COPIES OF THIS PLAN SHEET.

NOTE:

FOR ACCURATE RIGHT OF WAY DATA, CONTACT RIGHT OF WAY ENGINEERING AT THE DISTRICT OFFICE.

IRRIGATION PLAN

(UVAS CREEK MITIGATION)

SCALE: 1" = 20'

IP-4

THIS PLAN ACCURATE FOR IRRIGATION WORK ONLY

STATE OF CALIFORNIA - DEPARTMENT OF TRANSPORTATION

Caltrans®

WATER QUALITY

SENIOR LANDSCAPE ARCHITECT: DAVID W. YAM

CALCULATED-DESIGNED BY: LAURIE J SMITH

CHECKED BY: ALEX MC DONALD

REVISED BY

DATE REVISED

LAST REVISION 05-10-11

DATE PLOTTED => 25-AUG-2011
TIME PLOTTED => 13:07

Dist	COUNTY	ROUTE	POST MILES TOTAL PROJECT	SHEET No.	TOTAL SHEETS
04	SCI	152	6.1/6.5	15	32

LICENSED LANDSCAPE ARCHITECT

6-13-11
PLANS APPROVAL DATE

LICENSED LANDSCAPE ARCHITECT
Laurie J. Smith No. 4082
Signature
8-31-12
Renewal Date
5-13-11
Date
STATE OF CALIFORNIA

THE STATE OF CALIFORNIA OR ITS OFFICERS OR AGENTS SHALL NOT BE RESPONSIBLE FOR THE ACCURACY OR COMPLETENESS OF SCANNED COPIES OF THIS PLAN SHEET.

NOTE:

FOR ACCURATE RIGHT OF WAY DATA, CONTACT RIGHT OF WAY ENGINEERING AT THE DISTRICT OFFICE.

THIS PLAN ACCURATE FOR IRRIGATION WORK ONLY

IRRIGATION PLAN

(UVAS CREEK MITIGATION)

SCALE: 1" = 20'

IP-5

STATE OF CALIFORNIA - DEPARTMENT OF TRANSPORTATION
Caltrans
WATER QUALITY

SENIOR LANDSCAPE ARCHITECT: DAVID W. YAM

CALCULATED-DESIGNED BY: LAURIE J SMITH
CHECKED BY: ALEX MC DONALD

REVISED BY
DATE REVISED

LAST REVISION 05-10-11
DATE PLOTTED => 25-AUG-2011
TIME PLOTTED => 13:07

Dist	COUNTY	ROUTE	POST MILES TOTAL PROJECT	SHEET No.	TOTAL SHEETS
04	SCI	152	6.1/6.5	16	32

LICENSED LANDSCAPE ARCHITECT

6-13-11
PLANS APPROVAL DATE

LICENSED LANDSCAPE ARCHITECT
Laurie J. Smith No. 3042
Signature
8-31-12
Renewal Date
5-13-11
Date
STATE OF CALIFORNIA

THE STATE OF CALIFORNIA OR ITS OFFICERS OR AGENTS SHALL NOT BE RESPONSIBLE FOR THE ACCURACY OR COMPLETENESS OF SCANNED COPIES OF THIS PLAN SHEET.

NOTE:

FOR ACCURATE RIGHT OF WAY DATA, CONTACT RIGHT OF WAY ENGINEERING AT THE DISTRICT OFFICE.

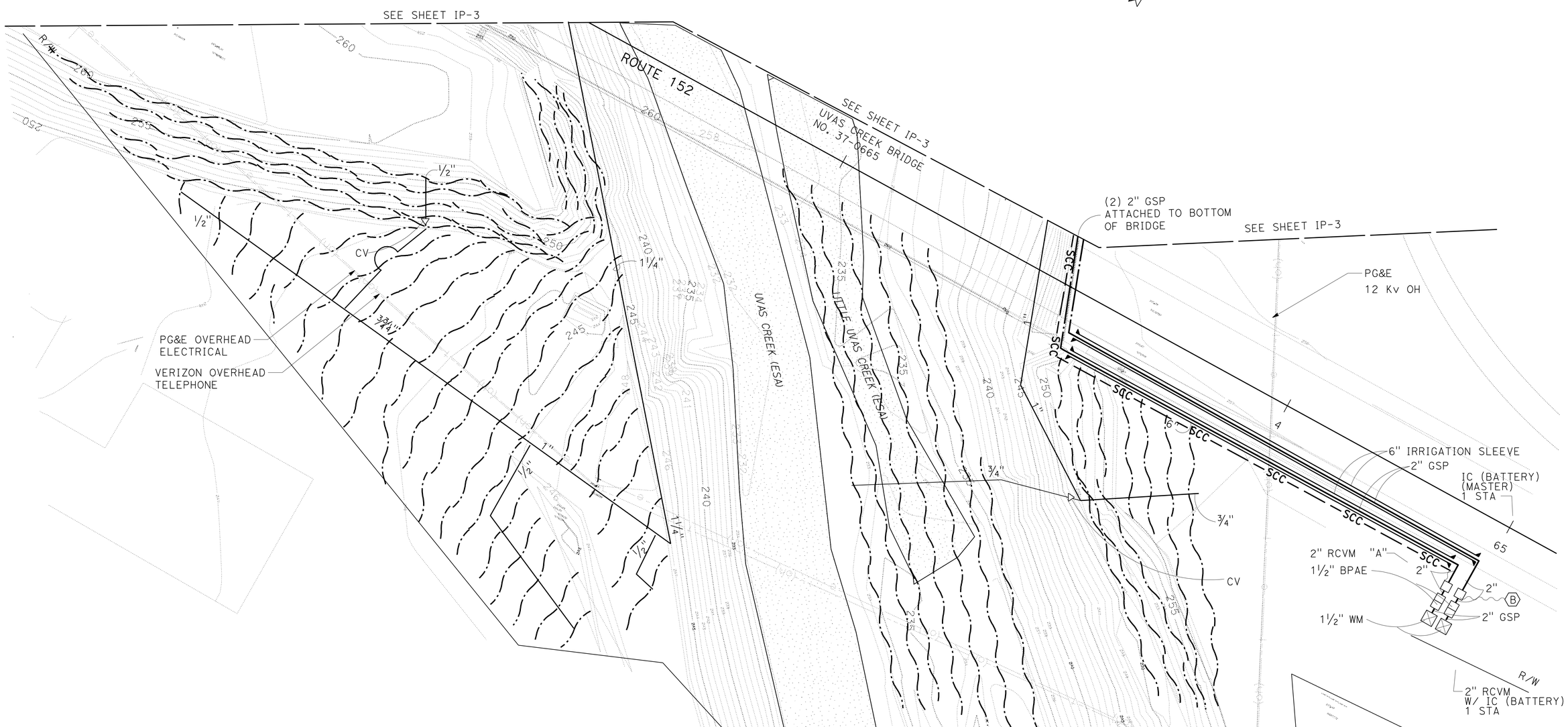

IRRIGATION PLAN

(UVAS CREEK MITIGATION)

SCALE: 1" = 20'

IP-6

THIS PLAN ACCURATE FOR IRRIGATION WORK ONLY

STATE OF CALIFORNIA - DEPARTMENT OF TRANSPORTATION

Caltrans®

WATER QUALITY

SENIOR LANDSCAPE ARCHITECT: DAVID W. YAM

CALCULATED-DESIGNED BY: LAURIE J SMITH

CHECKED BY: ALEX MC DONALD

REVISED BY

DATE REVISED

LAST REVISION 05-10-11

DATE PLOTTED => 25-AUG-2011
TIME PLOTTED => 13:07

Dist	COUNTY	ROUTE	POST MILES TOTAL PROJECT	SHEET No.	TOTAL SHEETS
04	SCI	152	6.1/6.5	17	32

LICENSED LANDSCAPE ARCHITECT

6-13-11
PLANS APPROVAL DATE

LICENSED LANDSCAPE ARCHITECT
Laurie J. Smith No. 3062
Signature
8-31-12
Renewal Date
5-13-11
Date
STATE OF CALIFORNIA

THE STATE OF CALIFORNIA OR ITS OFFICERS OR AGENTS SHALL NOT BE RESPONSIBLE FOR THE ACCURACY OR COMPLETENESS OF SCANNED COPIES OF THIS PLAN SHEET.

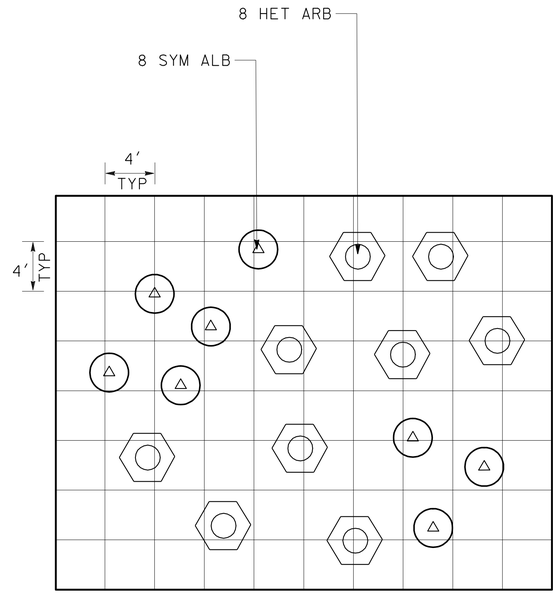

APPROXIMATELY 1280 SQFT

TYPICAL PLANT SPACING (ZONE 1)

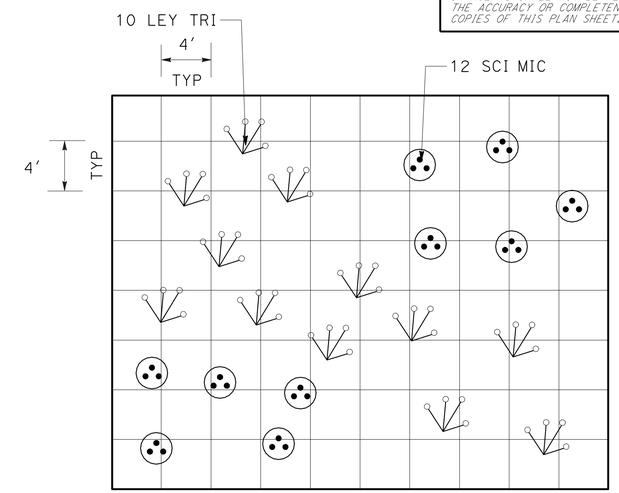

APPROXIMATELY 1280 SQFT

TYPICAL PLANT SPACING (ZONE 2)

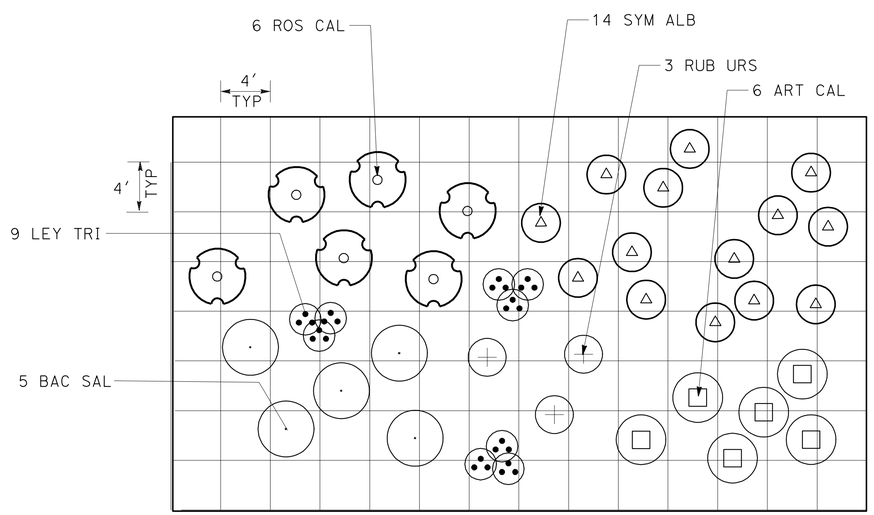

APPROXIMATELY 1790 SQFT

TYPICAL PLANTSPACING (ZONE 3)

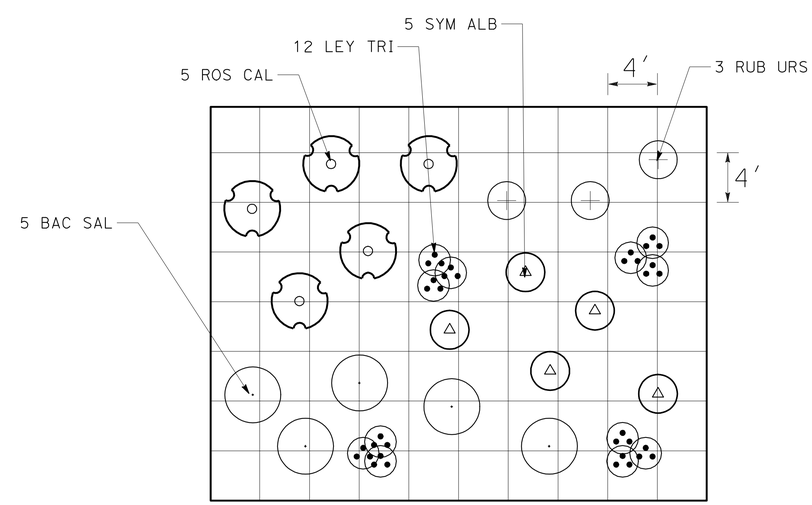

APPROXIMATELY 1280 SQFT

TYPICAL PLANT SPACING (ZONE 4)

LANDSCAPE DETAILS

NO SCALE

LD-1

STATE OF CALIFORNIA - DEPARTMENT OF TRANSPORTATION
Caltrans®
WATER QUALITY

SENIOR LANDSCAPE ARCHITECT: DAVID W. YAM

CALCULATED-DESIGNED BY: LAURIE J SMITH
CHECKED BY: ALEX MC DONALD

REVISED BY
DATE REVISED

LAST REVISION 05-10-11
DATE PLOTTED => 25-AUG-2011
TIME PLOTTED => 13:08

Dist	COUNTY	ROUTE	POST MILES TOTAL PROJECT	SHEET No.	TOTAL SHEETS
04	SCI	152	6.1/6.5	18	32

LICENSED LANDSCAPE ARCHITECT

6-13-11
PLANS APPROVAL DATE

LICENSED LANDSCAPE ARCHITECT — CONNIE M. YIP No. 4371 — Signature — 02-29-12 Renewal Date — 5-13-11 Date — STATE OF CALIFORNIA

THE STATE OF CALIFORNIA OR ITS OFFICERS OR AGENTS SHALL NOT BE RESPONSIBLE FOR THE ACCURACY OR COMPLETENESS OF SCANNED COPIES OF THIS PLAN SHEET.

SPRINKLER SCHEDULE

SYMBOL	TYPE	DESCRIPTION	SPRAY PATTERN	OPERATING PRESSURE (psi)	PRESSURE COMPENSATING	PLUS/MINUS 5% ② DISCHARGE: GALLONS PER MINUTE (GPM)	GALLONS PER HOUR (GPH)	RADIUS (ft)	WIDTH x LENGTH (ft)	MATERIAL	INLET CONNECTION (NPT INCH)	POSITIVE-LOCKING Adj ARC STOP	BACKSPLASH PREVENTER	DIFFUSER PIN	DISTANCE CONTROL FLAP	Adj DISCHARGE	RISER: TYPE	MATERIAL: PLASTIC	GALVANIZED	SIZE (IPS INCH)	HEIGHT (INCH)	FLOW SHUTOFF DEVICE	⑤ SWING JOINT (TYPE)	RISER SUPPORT	SPRINKLER PROTECTOR (TYPE)	REMARKS
⑥	A-6	GEAR DRIVEN ROTOR	H	30	-	0.58	-	20	-	PL	¾"	-	-	-	-	-	-	X	-	-	-	-	I	-	-	12" POP UP ROTOR
⑦	A-7	GEAR DRIVEN ROTOR	H	35	-	1.4	-	31	-	PL	¾"	-	-	-	-	-	-	X	-	-	-	-	I	-	-	12" POP UP ROTOR
○	C-2	BUBBLER	F	25	X	.25	-	-	-	PL	½"	-	-	-	-	-	V	X	-	½"	-	-	-	-	-	
-	D-1	SINGLE OUTLET EMITTER	-	7.2/58	X	-	1	-	-	PL	-	-	-	-	-	-	-	-	-	-	-	-	-	-	-	DRIP EMMITTER

X IN BOX DENOTES REQUIREMENT

APPLICABLE WHEN CIRCLED BELOW:

1 - SEE SPECIAL PROVISIONS.
② - IF A PRESSURE COMPENSATING DEVICE IS SPECIFIED, THE DISCHARGE AND RADII SHOWN REFLECT ITS USE.
3 - ARC STOP SHALL BE FITTED WITH A NUT AND BOLT.
4 - VINYL-COATED CAST IRON HOUSING.
⑤ - SWING JOINTS REQUIRED ADJACENT TO SHOULDERS, CURBS, SIDEWALKS, AND DIKES.
6 - UNLESS OTHERWISE SHOWN ON PLANS.

IRRIGATION CROSSOVERS

LOCATION: LINE	STATION	SIDE: L+	R+	CONDUIT TYPE ⑤ SIZE (INCH): 8	LENGTH (LF)	(N) WATER LINE CROSSOVER SIZE (INCH)	(N) SPRINKLER CONTROL CROSSOVER SIZE (INCH)
A9	56+21	X	X	72	-	3	2
A9	55+25	-	-	68	-	3	2
TOTAL				140	-		

(N) - NOT A SEPARATE PAY ITEM FOR INFORMATION ONLY
X - DENOTES REQUIREMENT

CONDUIT TYPE:
(APPLICABLE WHEN CIRCLED BELOW AND SHOWN UNDER THE 'CONDUIT TYPE' COLUMN HEADING)

1 BITUMINOUS COATED CORRUGATED STEEL PIPE (0.064 INCH THICK)
2 CORRUGATED STEEL PIPE (0.064 INCH THICK)
3 CORRUGATED HIGH DENSITY POLYETHYLENE PIPE
4 ALTERNATIVE CONDUIT
⑤ WELDED STEEL PIPE

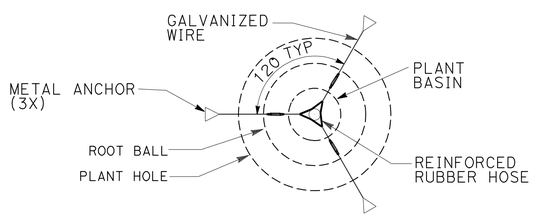

PLAN

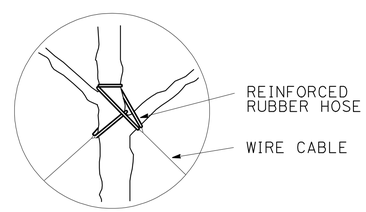

DETAIL "B"

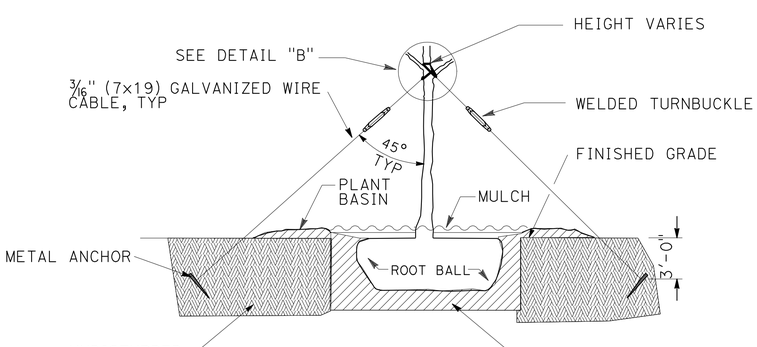

SECTION

TREE GUYING (METAL ANCHORS)

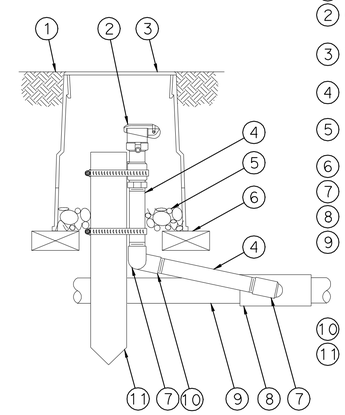

1. FINISH GRADE/TOP OF MULCH
2. QUICK-COUPLING VALVE:
3. VALVE BOX WITH COVER:
4. PVC SCH 80 NIPPLE (LENGTH AS REQUIRED)
5. 3-INCH MINIMUM DEPTH OF 3/4-INCH WASHED GRAVEL
6. BRICK (1 OF 2)
7. PVC SCH 40 STREET ELL
8. PVC SCH 40 TEE OR ELL
9. PVC MAINLINE PIPE
10. PVC SCH 40 ELL
11. 2" x 2" x 12" REDWOOD STAKE WITH STAINLESS STEEL GEAR CLAMPS OR EQUIVALENT SUPPORT SYSTEM

NOTE:
FURNISH FITTINGS AND PIPING NOMINALLY SIZED IDENTICAL TO NOMINAL QUICK COUPLING VALVE INLET SIZE.

SECTION

QUICK COUPLER VALVE IN VALVE BOX

LANDSCAPE DETAILS

NO SCALE

LD-2

STATE OF CALIFORNIA - DEPARTMENT OF TRANSPORTATION
Caltrans® LANDSCAPE ARCHITECTURE
SENIOR LANDSCAPE ARCHITECT: BRYAN WALKER
CALCULATED-DESIGNED BY: CONNIE YIP
CHECKED BY: BRYAN WALKER
REVISED BY
DATE REVISED

LAST REVISION 00-00-00 | DATE PLOTTED => 25-AUG-2011 | TIME PLOTTED => 13:08

Dist	COUNTY	ROUTE	POST MILES TOTAL PROJECT	SHEET No.	TOTAL SHEETS
04	SCI	152	6.1/6.5	19	32

LICENSED LANDSCAPE ARCHITECT

6-13-11
PLANS APPROVAL DATE

LICENSED LANDSCAPE ARCHITECT
Laurie J. Smith No. 3082
Signature
8-31-12
Renewal Date
5-13-11
Date
STATE OF CALIFORNIA

THE STATE OF CALIFORNIA OR ITS OFFICERS OR AGENTS SHALL NOT BE RESPONSIBLE FOR THE ACCURACY OR COMPLETENESS OF SCANNED COPIES OF THIS PLAN SHEET.

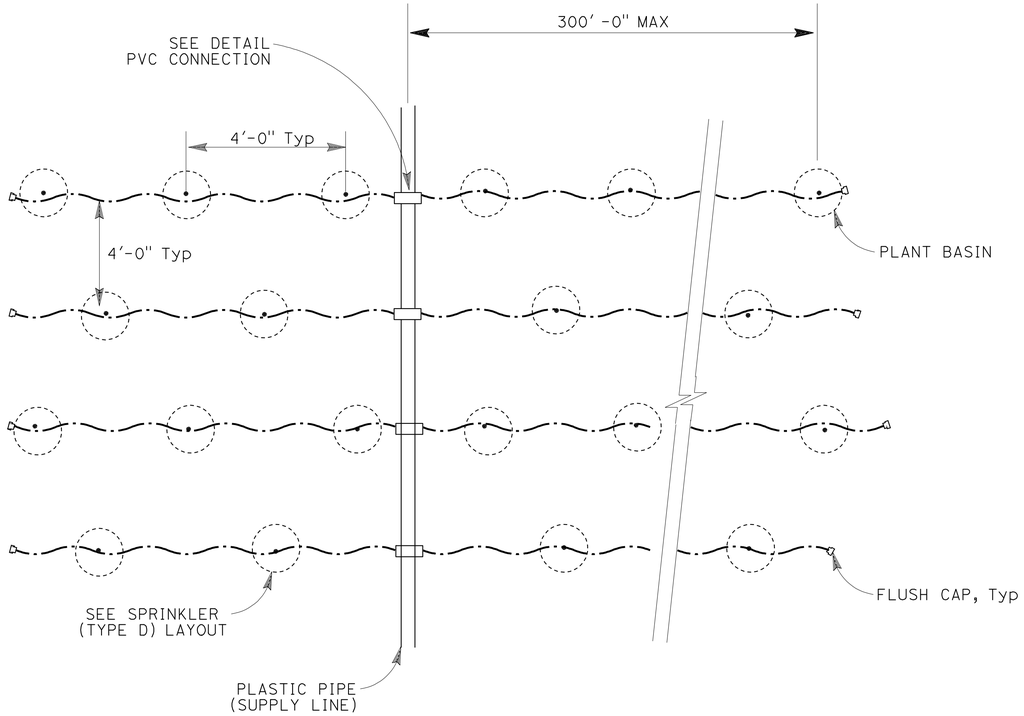

PLAN
SPRINKLER (TYPE D-1) LAYOUT Typ

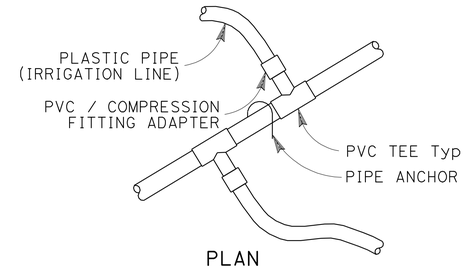

PLAN
PVC CONNECTION

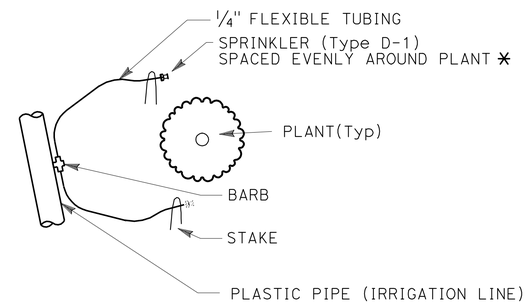

PLAN VIEW

* 2 EMITTERS PER PLANT

SPRINKLER (TYPE D-1) LAYOUT

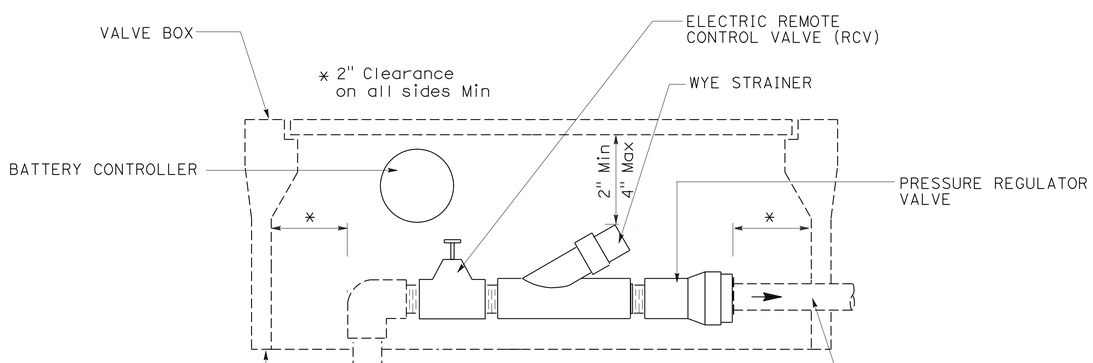

ELEVATION
VALVE ASSEMBLY UNIT

EROSION CONTROL QUANTITY

SHEET No.	COMPOST (INCORPORATE) (SQYD)	EROSION CONTROL (HYDROSEED) (SQFT)
PP-1	1,833	-
PP-2	2,390	-
PP-3	-	21,723
PP-4	-	38,787
PP-5	-	18,086
PP-6	-	31,404
TOTAL	4,223	110,000

TEMPORARY WATER POLLUTION CONTROL QUANTITIES

ITEM	UNIT	PP-1	PP-2	PP-3	PP-4	PP-5	PP-6	TOTAL
TEMPORARY FIBER ROLLS	LF	-	-	190	343	530	1700	1700
TEMPORAY CONSTRUCTION ENTRANCE	EA	-	1	1	-	-	2	2

LANDSCAPE DETAILS

NO SCALE

LD-3

STATE OF CALIFORNIA - DEPARTMENT OF TRANSPORTATION
Caltrans®
WATER QUALITY

SENIOR LANDSCAPE ARCHITECT: DAVID W. YAM

CALCULATED-DESIGNED BY: LAURIE J SMITH
CHECKED BY: ALEX MC DONALD

REVISED BY | DATE REVISED

LAST REVISION 05-10-11 | DATE PLOTTED => 25-AUG-2011 | TIME PLOTTED => 13:08

Dist	COUNTY	ROUTE	POST MILES TOTAL PROJECT	SHEET No.	TOTAL SHEETS
04	SCI	152	6.1/6.5	20	32

LICENSED LANDSCAPE ARCHITECT

6-13-11
PLANS APPROVAL DATE

LICENSED LANDSCAPE ARCHITECT — CONNIE M. YIP (NO. 4371) — Signature — 02-29-12 Renewal Date — 05-13-11 Date — STATE OF CALIFORNIA

THE STATE OF CALIFORNIA OR ITS OFFICERS OR AGENTS SHALL NOT BE RESPONSIBLE FOR THE ACCURACY OR COMPLETENESS OF SCANNED COPIES OF THIS PLAN SHEET.

SUBTOTALS PER VALVE ON LATERAL SUPPLY SIDE OF CONTROL VALVE

DESCRIPTION			UNIT	VALVE OR ASSEMBLY NUMBER																							SUBTOTALS	UNIT	DESCRIPTION		
				A-1	A-2	A-3	A-4	A-5	A-6	A-7	A-8	A-9	A-10	A-11	A-12	A-13	A-14	A-15	A-16	A-17	A-18	B-1	B-2	B-3	B-4	C-1	C-2					
PLASTIC PIPE SUPPLY LINE	PR 200	¾"	LF	444	259	97	69	184	261	181	198	759	57	56	58	80	596	727	104	84	40	-	-	-	-	-	-		4254	LF	¾"	PR 200	PLASTIC PIPE SUPPLY LINE
		1"	LF	257	33	28	26	87	118	47	23	274	113	114	112	117	258	132	54	55	-	-	-	-	-	-	-		1848	LF	1"		
		1-1/4"	LF	136	90	34	45	56	88	-	-	-	87	86	85	83	94	116	28	93	56	-	-	-	-	-	-		1177	LF	1-1/4"		
		1-1/2"	LF	-	-	-	-	-	-	-	-	25	5	30	5	43	23	61	13	-	-	-	-	-	-	-	-		205	LF	1-1/2"		
	PPIL SCH 40 UVR	½"	LF	-	-	-	-	-	-	-	-	-	-	-	-	-	-	-	-	-	-	-	221	286	361	1,342	-		2210	LF	½"	PPIL SCH 40 UVR	
		¾"	LF	-	-	-	-	-	-	-	-	-	-	-	-	-	-	-	-	-	-	-	-	-	-	162	174		336	LF	¾"		
		1"	LF	-	-	-	-	-	-	-	-	-	-	-	-	-	-	-	-	-	-	353	488	821	-	216	103		1981	LF	1"		
		1¼"	LF	-	-	-	-	-	-	-	-	-	-	-	-	-	-	-	-	-	-	183	-	-	376	-	-		559	LF	1¼"		
		½"	LF	-	-	-	-	-	-	-	-	-	-	-	-	-	-	-	-	-	-	3,087	3,253	2,951	3,916	4,796	2,282		20285	LF	½"		
GSP																																GSP	
DIP																																DIP	
SPRINKLER TYPE		A-6	EA		-	6	6	-	-	12	11	-	-	-	-	-	-	-	-	-	-	-	-	-	-	-	-		35	EA	A-6	SPRINKLER TYPE	
		A-7	EA	-	-	-	-	-	-	-	-	-	10	10	10	10	-	-	8	7	-	-	-	-	-	-	-		55	EA	A-7		
		C-2	EA	82	55	-	-	56	46	-	-	88	-	-	-	-	84	112	-	-	42	-	-	-	-	-	-		565	EA	C-2		
		D-1	EA	-	-	-	-	-	-	-	-	-	-	-	-	-	-	-	-	-	-	814	569	649	973	457	863		4325	EA	D-1		

DESCRIPTION			UNIT	VALVE OR ASSEMBLY NUMBER	SUBTOTALS	UNIT	DESCRIPTION		
PLASTIC PIPE SUPPLY LINE	PR 200							PR 200	PLASTIC PIPE SUPPLY LINE
	PR 315							PR 315	
GSP								GSP	
DIP								DIP	
SPRINKLER TYPE								SPRINKLER TYPE	

IRRIGATION QUANTITIES

IQ-1

STATE OF CALIFORNIA - DEPARTMENT OF TRANSPORTATION
Caltrans® LANDSCAPE ARCHITECTURE

SENIOR LANDSCAPE ARCHITECT: BRYAN WALKER
CALCULATED-DESIGNED BY: CONNIE YIP
CHECKED BY: BRYAN WALKER
REVISED BY
DATE REVISED

LAST REVISION 05-10-11
DATE PLOTTED => 25-AUG-2011
TIME PLOTTED => 13:08

Dist	COUNTY	ROUTE	POST MILES TOTAL PROJECT	SHEET No.	TOTAL SHEETS
04	SCI	152	6.1/6.5	21	32

LICENSED LANDSCAPE ARCHITECT

6-13-11
PLANS APPROVAL DATE

LICENSED LANDSCAPE ARCHITECT CONNIE M. YIP No. 4371 Signature 02-29-12 Renewal Date 5-13-11 Date STATE OF CALIFORNIA

THE STATE OF CALIFORNIA OR ITS OFFICERS OR AGENTS SHALL NOT BE RESPONSIBLE FOR THE ACCURACY OR COMPLETENESS OF SCANNED COPIES OF THIS PLAN SHEET.

SUBTOTALS PER PLAN SHEET ON MAIN SUPPLY SIDE OF CONTROL VALVE

DESCRIPTION			UNIT	SHEET NUMBER IP-1	IP-2	IP-3	IP-4	IP-5	IP-6	SUBTOTALS
BPA		1-1/2"	EA	-	-	-	-	-	2	2
BPA		ENCLOSURE	EA	-	-	-	-	-	2	2
BOOSTER PUMP										
IRRIGATION CONTROLLER		20 STATION (SOLAR)	EA	-	1	-	-	-	-	1
IRRIGATION CONTROLLER		1 STATION (BATTERY)	EA	-	-	-	-	-	1	1
IRRIGATION CONTROLLER		2 STATION (BATTERY)	EA	-	-	1	-	-	-	1
IRRIGATION CONTROLLER		4 STATION (BATTERY)	EA	-	-	1	-	-	-	1
VALVES AND ASSEMBLIES	WS		EA	-	1	-	-	-	-	1
VALVES AND ASSEMBLIES	WS	1-1/2"	EA	1	3	-	-	-	-	4
VALVES AND ASSEMBLIES	RCV	1"	EA	2	6	-	-	-	-	8
VALVES AND ASSEMBLIES	RCV	1-1/2"	EA	3	7	-	-	-	-	10
VALVES AND ASSEMBLIES	RCV	2"	EA	-	-	-	-	-	2	2
VALVES AND ASSEMBLIES	GV	2"	EA	-	8	-	-	-	-	8
VALVES AND ASSEMBLIES	QCV	¾"	EA	1	4	-	-	-	-	5
VALVES AND ASSEMBLIES	CV	VAR	EA	-	-	6	5	3	2	16
VALVES AND ASSEMBLIES	VAU	1"	EA	-	-	6	-	-	-	6
CONDUIT	CSP									
CONDUIT	WSP	8"	LF	-	140	-	-	-	-	140
PLASTIC PIPE SUPPLY LINE	PR 200									
PLASTIC PIPE SUPPLY LINE	SCH 40	2"	LF	470	885	-	-	-	360	1715
PLASTIC PIPE SUPPLY LINE	SCH 40									
PLASTIC PIPE SUPPLY LINE	UVR									
	PPIL									
GSP		2"	LF	-	-	757	-	-	139	896
DIP										

TOTAL QUANTITIES

TOTALS	UNIT	DESCRIPTION		
2	EA	1-1/2"		BPA
2	EA	ENCLOSURE		BPA
		BOOSTER PUMP		
1	EA	20 STATION (SOLAR)		IRRIGATION CONTROLLER
1	EA	1 STATION (BATTERY)		IRRIGATION CONTROLLER
1	EA	2 STATION (BATTERY)		IRRIGATION CONTROLLER
1	EA	4 STATION (BATTERY)		IRRIGATION CONTROLLER
1	EA	1"	WS	VALVES AND ASSEMBLIES
4	EA	1-1/2"	WS	VALVES AND ASSEMBLIES
8	EA	1"	RCV	VALVES AND ASSEMBLIES
10	EA	1-1/2"	RCV	VALVES AND ASSEMBLIES
2	EA	2"	RCV	VALVES AND ASSEMBLIES
8	EA	2"	GV	VALVES AND ASSEMBLIES
5	EA	¾"	QCV	VALVES AND ASSEMBLIES
16	EA	VAR	CV	VALVES AND ASSEMBLIES
6	EA	1"	VAU	VALVES AND ASSEMBLIES
140	LF	8"	WSP	CONDUIT
4254	LF	¾"	PR 200	PLASTIC PIPE SUPPLY LINE
1848	LF	1"	PR 200	PLASTIC PIPE SUPPLY LINE
1177	LF	1-1/4"	PR 200	PLASTIC PIPE SUPPLY LINE
205	LF	1-1/2"	PR 200	PLASTIC PIPE SUPPLY LINE
1715	LF	2"	SCH 40	PLASTIC PIPE SUPPLY LINE
2210	LF	½"	UVR SCH 40	PLASTIC PIPE SUPPLY LINE
336	LF	¾"	UVR SCH 40	PLASTIC PIPE SUPPLY LINE
1981	LF	1"	UVR SCH 40	PLASTIC PIPE SUPPLY LINE
559	LF	1¼"	UVR SCH 40	PLASTIC PIPE SUPPLY LINE
20283	LF	½"	PPIL	
896	LF	2"		GSP
35	EA	A-6		SPRINKLER TYPE
55	EA	A-7		SPRINKLER TYPE
565	EA	C-2		SPRINKLER TYPE
4325	EA	D-1		SPRINKLER TYPE

IRRIGATION QUANTITIES
IQ-2

STATE OF CALIFORNIA - DEPARTMENT OF TRANSPORTATION
Caltrans® LANDSCAPE ARCHITECTURE

SENIOR LANDSCAPE ARCHITECT: BRYAN WALKER
CALCULATED-DESIGNED BY: CONNIE YIP
CHECKED BY: BRYAN WALKER
REVISED BY
DATE REVISED

LAST REVISION 04-28-11
DATE PLOTTED => 25-AUG-2011
TIME PLOTTED => 13:08

Dist	COUNTY	ROUTE	POST MILES TOTAL PROJECT	SHEET No.	TOTAL SHEETS
04	SCI	152	6.1/6.5	22	32

REGISTERED CIVIL ENGINEER 2/8/11 DATE

6-13-11
PLANS APPROVAL DATE

REGISTERED PROFESSIONAL ENGINEER Jerilyn L. Struven No. 49964 Exp. 12-31-12 CIVIL STATE OF CALIFORNIA

THE STATE OF CALIFORNIA OR ITS OFFICERS OR AGENTS SHALL NOT BE RESPONSIBLE FOR THE ACCURACY OR COMPLETENESS OF SCANNED COPIES OF THIS PLAN SHEET.

LEGEND

No. CONSTRUCTION AREA SIGN NUMBER

NOTE

EXACT LOCATION AND POSITION OF ROADSIDE SIGNS AND CONSTRUCTION AREA SIGNS TO BE DETERMINED BY THE ENGINEER.

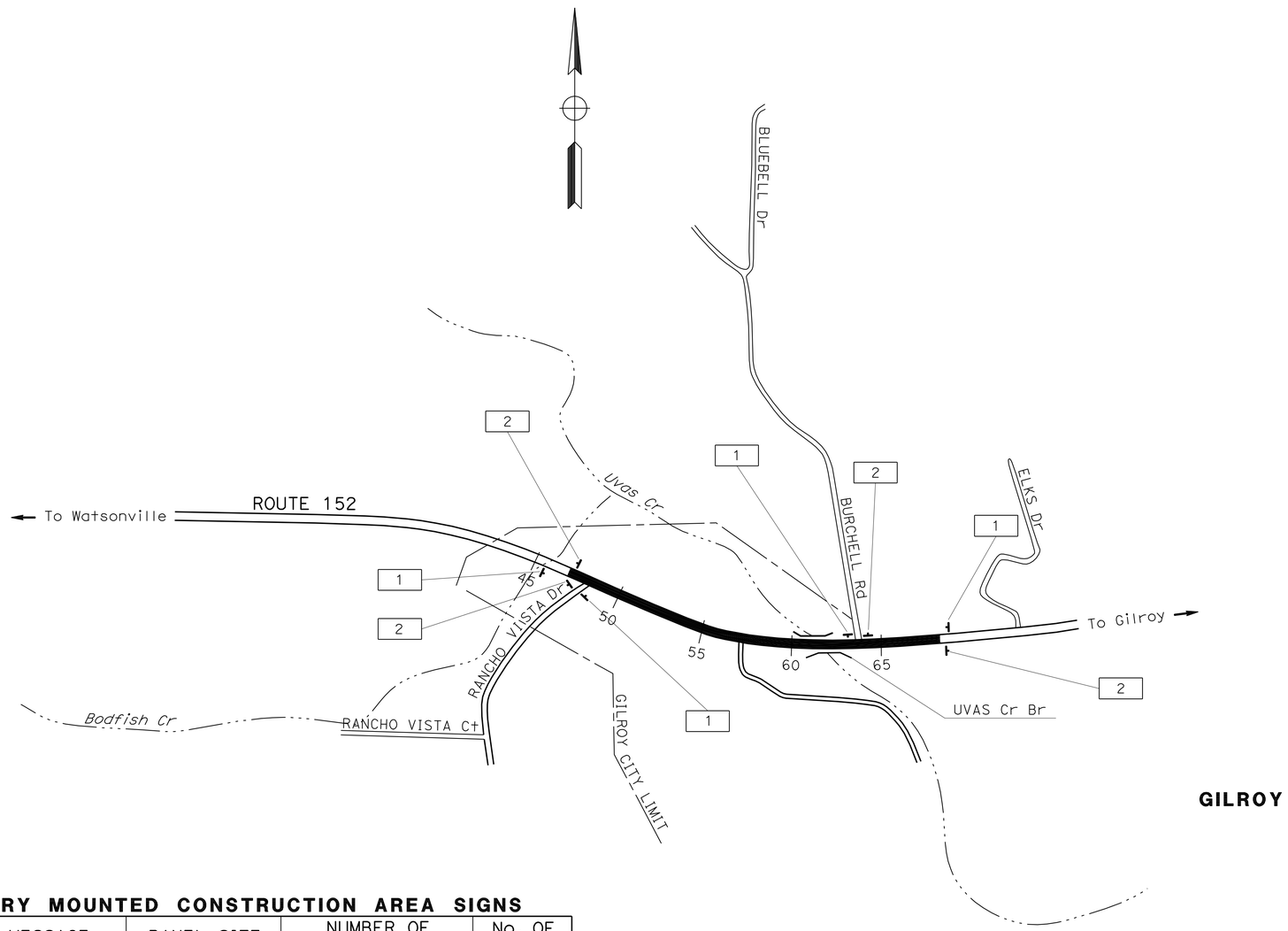

STATIONARY MOUNTED CONSTRUCTION AREA SIGNS

SIGN No.	SIGN CODE	MESSAGE	PANEL SIZE	NUMBER OF POSTS AND SIZE	No. OF SIGNS
1	W20-1	ROAD WORK AHEAD	36''x 36''	(ONE) 4''x 6''	4
2	G20-2	END ROAD WORK	36''x 18''	(ONE) 4''x 4''	4

CONSTRUCTION AREA SIGNS

NO SCALE

THIS PLAN ACCURATE FOR CONSTRUCTION AREA SIGN WORK ONLY

CS-1

STATE OF CALIFORNIA - DEPARTMENT OF TRANSPORTATION
Caltrans
TRAFFIC

FUNCTIONAL SUPERVISOR: ROLAND AU-YUENG

CALCULATED-DESIGNED BY: SHARI TALAI
CHECKED BY: JERYLIN STRUVEN

REVISED BY: ST
DATE REVISED: 2/2/11

LAST REVISION 01-26-11 | DATE PLOTTED => 25-AUG-2011 | TIME PLOTTED => 13:08

DIST	COUNTY	ROUTE	POST MILES TOTAL PROJECT	SHEET NO.	TOTAL SHEETS
04	SCI	152	6.1/6.5	23	32

REGISTERED CIVIL ENGINEER

November 17, 2006
PLANS APPROVAL DATE

REGISTERED PROFESSIONAL ENGINEER Michael Janzen No. 44788 Exp. 03-31-08 CIVIL STATE OF CALIFORNIA

The State of California or its officers or agents shall not be responsible for the accuracy or completeness of electronic copies of this plan sheet.

To accompany plans dated 6-13-11

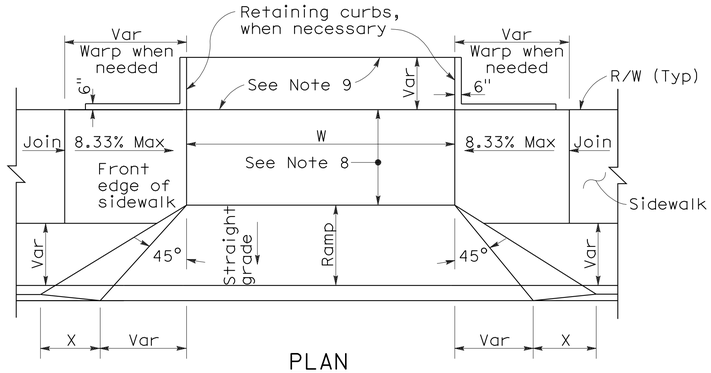

PLAN

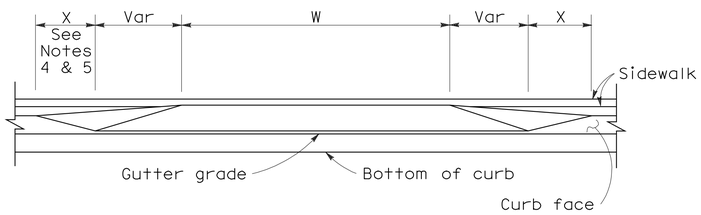

ELEVATION

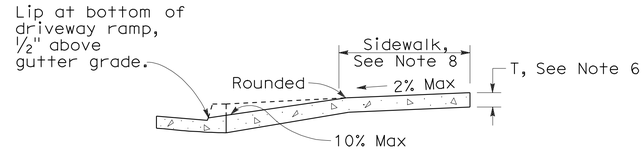

CASE A

Typical driveway, sidewalk not depressed

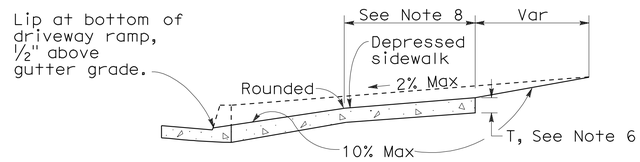

CASE B

Driveway with depressed sidewalk

SECTIONS

DRIVEWAYS

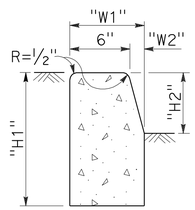

TYPE A1 CURBS

See Table A

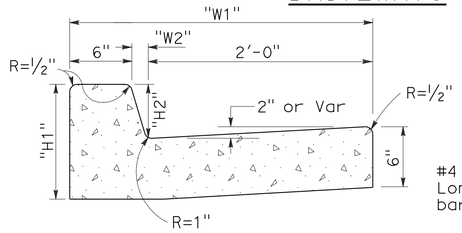

TYPE A2 CURBS

See Table A

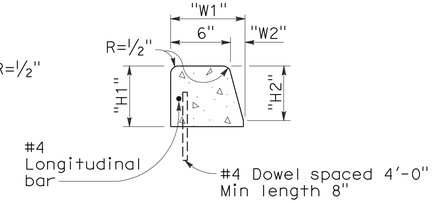

TYPE A3 CURBS

Superimposed on existing pavement
See Table A

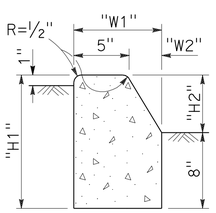

TYPE B1 CURBS

See Table A

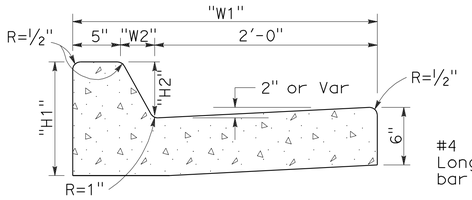

TYPE B2 CURBS

See Table A

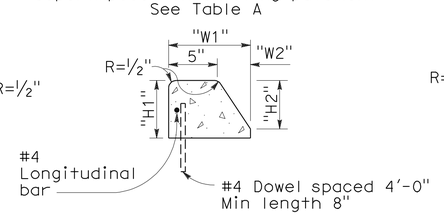

TYPE B3 CURBS

Superimposed on existing pavement
See Table A

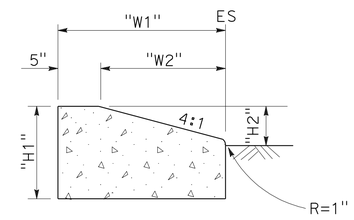

TYPE D CURBS

See Table A

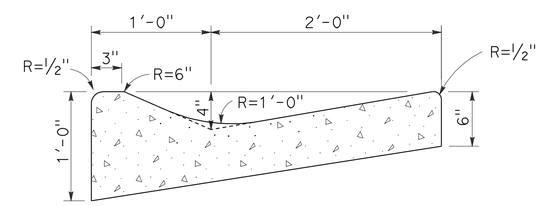

TYPE E CURB

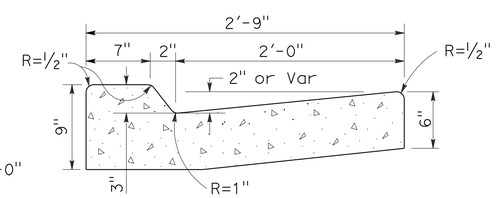

TYPE B4 CURBS

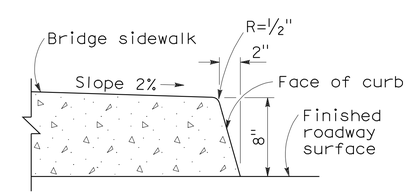

TYPE H CURB

On Bridges

CURBS

CURB QUANTITIES

TYPE	CUBIC YARDS PER LINEAR FOOT
A1-6	0.02585
A1-8	0.03084
A2-6	0.05903
A2-8	0.06379
A3-6	0.01036
A3-8	0.01435
B1-4	0.02185
B1-6	0.02930
B2-4	0.05515
B2-6	0.06171
B3-4	0.00641
B3-6	0.01074
B4	0.05709
D-4	0.04083
D-6	0.06804
E	0.06661

TABLE A

CURB TYPE	DIMENSIONS "H1"	"H2"	"W1"	"W2"
A1-6	1'-2"	6"	7½"	1½"
A1-8	1'-4"	8"	8"	2"
A2-6	1'-0"	6"	2'-7½"	1½"
A2-8	1'-2"	8"	2'-8"	2"
A3-6	6"	5"	7¼"	1¼"
A3-8	8"	7"	7¾"	1¾"
B1-4	1'-0"	4"	7½"	2½"
B1-6	1'-2"	6"	9"	4"
B2-4	10"	4"	2'-7½"	2½"
B2-6	1'-0"	6"	2'-9"	4"
B3-4	4"	3"	7"	2"
B3-6	6"	5"	8½"	3½"
D-4	10"	4"	1'-6"	1'-1"
D-6	1'-0"	6"	2'-2"	1'-8"

NOTES:

1. Case A driveway section typically applies.
2. Use Case B driveway section when ramp slopes would exceed 10% in Case A.
3. Use Case B driveway section when sidewalk cross slope would exceed 2% in Case A.
4. X=3'-0" except for curb heights over 10" where 4:1 slopes shall be used on curb slope.
5. X is a variable when sidewalk is located where wheelchairs may traverse the surface. Slopes shall not exceed 8.33%.
6. Sidewalk and ramp thickness "T" at driveway shall be 4" for residental and 6" for commercial.
7. Difference in slope of the driveway ramp and the slope of a line between the gutter and a point on the roadway 5'-0" from gutter line shall not exceed 15%. Reduce driveway ramp slope, not gutter slope, where required.
8. Minimum width of clear passageway for sidewalk shall be 4'-0".
9. Retaining curbs and acquisition of construction easement may be necessary for narrow sidewalks or curb heights in excess of 6".
10. Across the pedestrian route at curb ramp locations, the gutter pan slope shall not exceed 1" of depth for each 2'-0" of width.

STATE OF CALIFORNIA
DEPARTMENT OF TRANSPORTATION

CURBS AND DRIVEWAYS

NO SCALE

RSP A87A DATED NOVEMBER 17, 2006 SUPERSEDES STANDARD PLAN A87A DATED MAY 1, 2006 - PAGE 113 OF THE STANDARD PLANS BOOK DATED MAY 2006.

REVISED STANDARD PLAN RSP A87A

2006 REVISED STANDARD PLAN RSP A87A

10-25-06

DIST	COUNTY	ROUTE	POST MILES TOTAL PROJECT	SHEET NO.	TOTAL SHEETS
04	SCI	152	6.1/6.5	24	32

LICENSED LANDSCAPE ARCHITECT

June 5, 2009
PLANS APPROVAL DATE

LICENSED LANDSCAPE ARCHITECT — Gregory A. Balzer — 2576 — 10 January 2-28-11 (Renewal Date) — 5-14-09 (Date) — STATE OF CALIFORNIA

The State of California or its officers or agents shall not be responsible for the accuracy or completeness of electronic copies of this plan sheet.

To accompany plans dated 6-13-11

A

AB	aggregate base
ABS	acrylonitrile-butadiene-styrene
AC	asphalt concrete
Adj	adjacent/adjustable
AIC	auxiliary irrigation controller
Alt	alternative
AMEND	amendment
ARV	air release valve
AUTO	automatic
AUX	auxiliary
AVB	atmospheric vacuum breaker

B

B&B	balled and burlapped
B/B	brass/bronze
B/B/PL	brass/bronze/plastic
B/PL	brass/plastic
BFM	bonded fiber matrix
Bit Ctd	bituminous coated
BP	booster pump
BPA	backflow preventer assembly
BPAE	backflow preventer assembly in enclosure
BPE	backflow preventer enclosure
BV	ball valve

C

CAP	corrugated aluminum pipe
CARV	combination air release valve
CCA	cam coupler assembly
CEC	controller enclosure cabinet
CHDPE	corrugated high density polyethylene
CL	chain link
CNC	control and neutral conductors
Conc	concrete
Cond	conduit
CSP	corrugated steel pipe
CST	center strip
CV	check valve

D

Dia	diameter
DIP	ductile iron pipe
DN	diameter nominal

E

EA	each
Elect	electric/electrical
Elev	elevation
ENCL	enclosure
EP	edge of pavement
ES	edge of shoulder
EST	end strip
ESTB	establishment
ETW	edge of traveled way

F

F	full circle
F/P	full/part circle
FAU	filter assembly unit
FCV	flow control valve
FERT	fertilizer
FG	finished grade
FIPT	female iron pipe thread
FIS	fertilizer injector system
FL	flow line
FM	flow monitor
FS	flow sensor
Ft	foot/feet
FV	flush valve

G

GAL	Gallon(s)
Galv	galvanized
GARV	garden valve
GPH	gallons per hour
GPM	gallons per minute
GSP	galvanized steel pipe
GV	gate valve

H

H	half circle
HB	hose bib
HDPE	high density polyethylene
HP	horsepower/hinge point
HPL	high pressure line
Hwy	highway

I

IC	irrigation controller
ICC	irrigation controller(s) in controller enclosure cabinet
ID	inside diameter
In	inches
IFS	irrigation filtration system
IPS	iron pipe size
IPT	iron pipe thread
Irr	irrigation

L

L	length
LF	linear foot

M

Max	maximum
MBGR	metal beam guard railing
MCV	manual control valve
MIC	master irrigation controller
Min	minimum
MIPT	male iron pipe thread
Misc	miscellaneous
Mtl	material
MVP	maintenance vehicle pullout

N

NCN	no common name
NL	nozzle line
No.	number
NPT	national pipe thread

O

O/C	on center
OD	outside diameter
Oz	ounce

P

P	part circle
PB	pull box
PCC	portland cement concrete
PE	polyethylene
Pkt	packet
PL	plastic
PLT	plant/planting
PLT ESTB	plant establishment
PM	post mile
PR	pressure rated
PRLV	pressure relief valve
PSFM	polymer stabilized fiber matrix
PSI	pounds per square inch
PRV	pressure reducing valve
PVC	polyvinyl chloride
Pvmt	pavement

Q

Q	quarter circle
QCV	quick coupling valve

R

R	radius
RCP	reinforced concrete pipe
RCV	remote control valve
RCVM	remote control valve (master)
RCVMF	remote control valve (master) w/ flow meter
RCW	recycled/reclaimed water
RECP	rolled erosion control product
REQ	required
R/W	right of way

S

S	slip
SCC	sprinkler control conduit
SCH	schedule
SF	state-furnished
Shld	shoulder
SQFT	square foot/feet
SQYD	square yard(s)
SST	side strip
Sta	station
Std	standard
SW	sidewalk/sound wall

T

T	third circle/thread
TLS	truck loading standpipe
TQ	three quarter circle
TRM	turf reinforcement mat
TRVD	traveled
TT	two third circle
Typ	typical

U

UG	underground

V

VAU	valve assembly unit

W

W	width
W/	with
WM	water meter
WS	wye strainer
WSP	welded steel pipe
WWM	welded wire mesh

NOTE:

FOR ADDITIONAL ABBREVIATIONS, SEE STANDARD PLANS A10A AND A10B.

STATE OF CALIFORNIA
DEPARTMENT OF TRANSPORTATION

PLANTING AND IRRIGATION ABBREVIATIONS

NO SCALE

RSP H1 DATED JUNE 5, 2009 SUPERSEDES STANDARD PLAN H1
DATED MAY 1, 2006 - PAGE 201 OF THE STANDARD PLANS BOOK DATED MAY 2006.

REVISED STANDARD PLAN RSP H1

2006 REVISED STANDARD PLAN RSP H1

DIST	COUNTY	ROUTE	POST MILES TOTAL PROJECT	SHEET NO.	TOTAL SHEETS
04	SCI	152	6.1/6.5	25	32

LICENSED LANDSCAPE ARCHITECT

June 5, 2009
PLANS APPROVAL DATE

The State of California or its officers or agents shall not be responsible for the accuracy or completeness of electronic copies of this plan sheet.

LICENSED LANDSCAPE ARCHITECT — Gregory A. Balzer — 2516 — 10-31-11 Expiration — 2-28-11 Renewal Date — 5-14-09 Date — STATE OF CALIFORNIA

To accompany plans dated 6-13-11

EXISTING	PROPOSED	ITEM DESCRIPTION
		WATER METER (WM)
		BACKFLOW PREVENTER ASSEMBLY (BPA)
		BACKFLOW PREVENTER ASSEMBLY IN ENCLOSURE (BPAE)
		BACKFLOW PREVENTER ENCLOSURE (BPE)
		BOOSTER PUMP (BP)
		TRUCK LOADING STANDPIPE (TLS)
FS	FS	FLOW SENSOR (FS)
X	X	MASTER IRRIGATION CONTROLLER (MIC)
		AUXILIARY IRRIGATION CONTROLLER (AIC)
		IRRIGATION CONTROLLER (IC)/ IRRIGATION CONTROLLER (IC) (BATTERY) IRRIGATION CONTROLLER (IC) (SOLAR)
		IRRIGATION CONTROLLER(S) IN CONTROLLER ENCLOSURE CABINET (ICC)
		CONTROL AND NEUTRAL CONDUCTORS (CNC)
SCC	SCC	SPRINKLER CONTROL CONDUIT (SCC)
		IRRIGATION CROSSOVER
		EXTEND IRRIGATION CROSSOVER
		IRRIGATION SLEEVE
dip	DIP	DUCTILE IRON PIPE (SUPPLY LINE) (MAIN) (DIP)
		GALVANIZED STEEL PIPE (SUPPLY LINE) (MAIN) (GSP)
		GALVANIZED STEEL PIPE (SUPPLY LINE) (LATERAL) (GSP)
		PLASTIC PIPE (PR 200) (SUPPLY LINE) (MAIN)
		PLASTIC PIPE (PR 200) (SUPPLY LINE) (LATERAL)
		PLASTIC PIPE (IRRIGATION LINE)
		REMOTE CONTROL VALVE (RCV) REMOTE CONTROL VALVE (MASTER) (RCVM) REMOTE CONTROL VALVE (MASTER) W/FLOW METER (RCVMF)
		MANUAL CONTROL VALVE (MCV)
		VALVE ASSEMBLY UNIT (VAU)
		WYE STRAINER (WS)
		FILTER ASSEMBLY UNIT (FAU)
		GATE VALVE (GV)
		BALL VALVE (BV)

EXISTING	PROPOSED	ITEM DESCRIPTION
		QUICK COUPLING VALVE (QCV)
		CAM COUPLER ASSEMBLY (CCA)
		PRESSURE REDUCING VALVE (PRV)
		PRESSURE RELIEF VALVE (PRLV)
		FLOW CONTROL VALVE (FCV)
		COMBINATION AIR RELEASE VALVE (CARV)
		CHECK VALVE (CV)
		FLUSH VALVE (FV)
		NOZZLE LINE W/TURNING UNION
		IRRIGATION SYSTEM
		IRRIGATION SYSTEM TO BE REMOVED
		CHAIN LINK GATE
		QUICK COUPLING VALVE W/SPRINKLER PROTECTOR
3	3	SPRINKLER W/SPRINKLER PROTECTOR
	C	CONNECT TO EXISTING SYSTEM
		CAP
		CAP EXISTING

VALVE CODE

RCV SIZE
IRRIGATION CONTROLLER
CONTROLLER STATION
VALVE IN PARALLEL (IF APPLICABLE)
GPM
QUANTITY OF SPRINKLERS (WHEN SHOWN)

* 2½"-A-2b-40 -60

MCV SIZE
VALVE NUMBER
GPM
QUANTITY OF TYPE SPRINKLERS (WHEN SHOWN)

* 2"-3-30 -50

* VALVE CODES FOR EXISTING VALVES ARE SHOWN IN A DASHED ENCLOSURE.

STATE OF CALIFORNIA
DEPARTMENT OF TRANSPORTATION

PLANTING AND IRRIGATION SYMBOLS

NO SCALE

RSP H2 DATED JUNE 5, 2009 SUPERSEDES RSP H2 DATED MARCH 7, 2008 AND STANDARD PLAN H2 DATED MAY 1, 2006 - PAGE 202 OF THE STANDARD PLANS BOOK DATED MAY 2006.

REVISED STANDARD PLAN RSP H2

2006 REVISED STANDARD PLAN RSP H2

5-11-09

DIST	COUNTY	ROUTE	POST MILES TOTAL PROJECT	SHEET NO.	TOTAL SHEETS
04	SCI	152	6.1/6.5	26	32

LICENSED LANDSCAPE ARCHITECT

June 5, 2009
PLANS APPROVAL DATE

The State of California or its officers or agents shall not be responsible for the accuracy or completeness of electronic copies of this plan sheet.

LICENSED LANDSCAPE ARCHITECT
Gregory A. Balzer 2516
10-28-11
Renewal Date
5-14-09
Date
STATE OF CALIFORNIA

To accompany plans dated 6-13-11

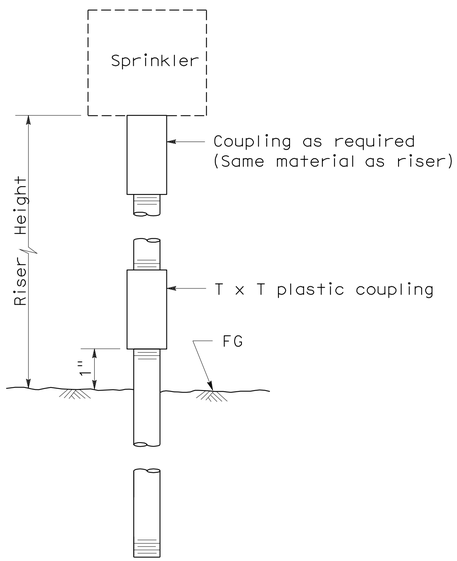

ELEVATION
RISER TYPE I

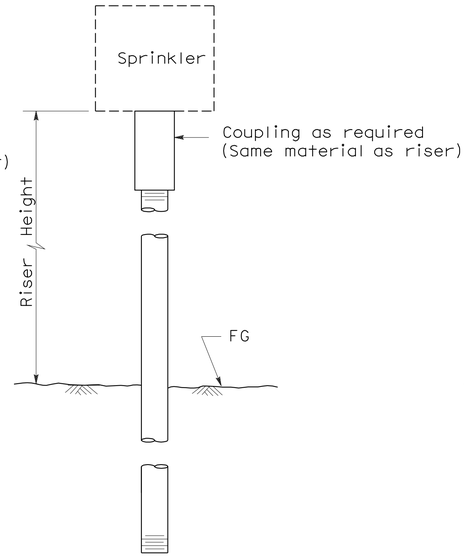

ELEVATION
RISER TYPE II

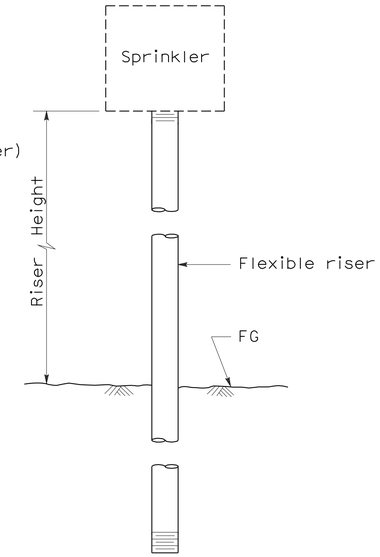

ELEVATION
RISER TYPE III

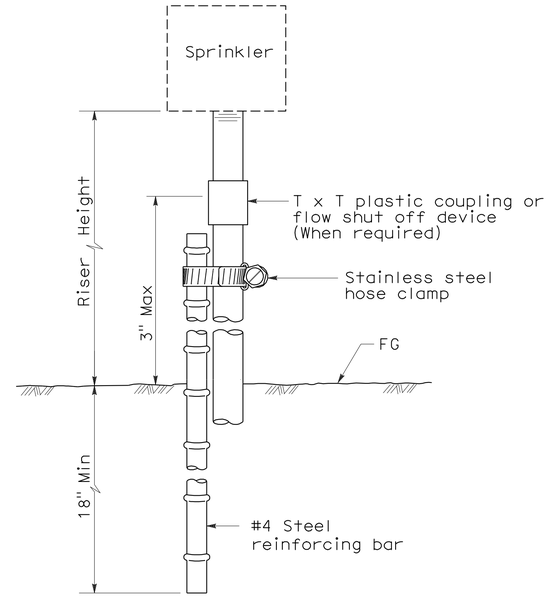

ELEVATION
RISER TYPE IV

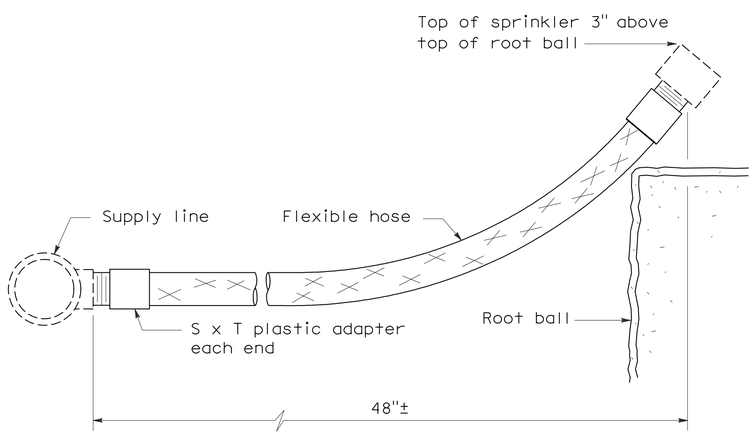

ELEVATION
RISER TYPE V

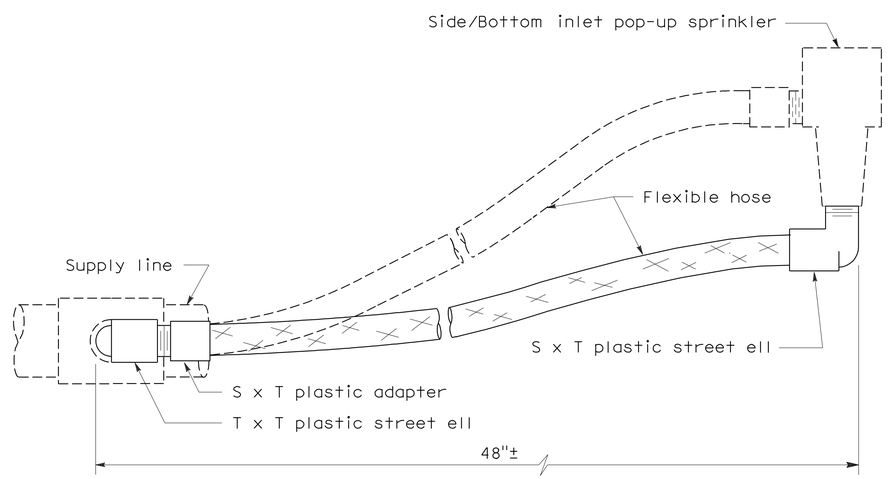

ELEVATION
RISER TYPE VI

STATE OF CALIFORNIA
DEPARTMENT OF TRANSPORTATION

PLANTING AND IRRIGATION DETAILS

NO SCALE

RSP H5 DATED JUNE 5, 2009 SUPERSEDES STANDARD PLAN H5
DATED MAY 1, 2006 - PAGE 205 OF THE STANDARD PLANS BOOK DATED MAY 2006.

REVISED STANDARD PLAN RSP H5

2006 REVISED STANDARD PLAN RSP H5

5-28-09

DIST	COUNTY	ROUTE	POST MILES TOTAL PROJECT	SHEET NO.	TOTAL SHEETS
04	SCI	152	6.1/6.5	27	32

Gregory A. Balzer
LICENSED LANDSCAPE ARCHITECT

June 5, 2009
PLANS APPROVAL DATE

LICENSED LANDSCAPE ARCHITECT Gregory A. Balzer 2576 STATE OF CALIFORNIA
10 January 2-28-11 (Renewal) Date 5-14-09 Date

The State of California or its officers or agents shall not be responsible for the accuracy or completeness of electronic copies of this plan sheet.

To accompany plans dated 6-13-11

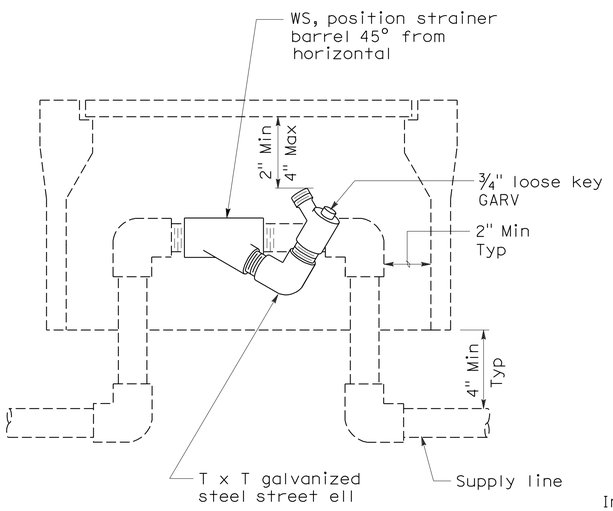

ELEVATION
WYE STRAINER

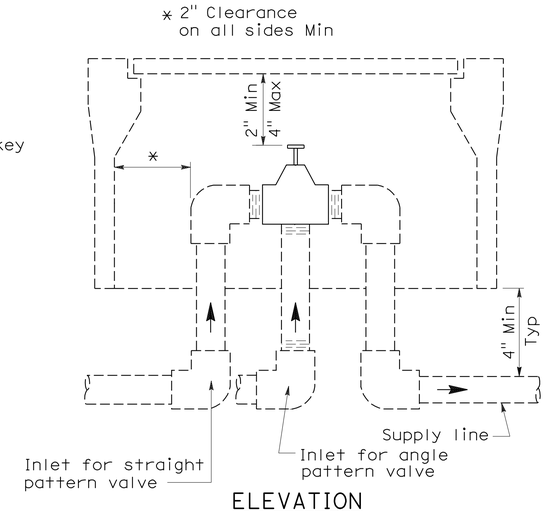

ELEVATION
VALVE

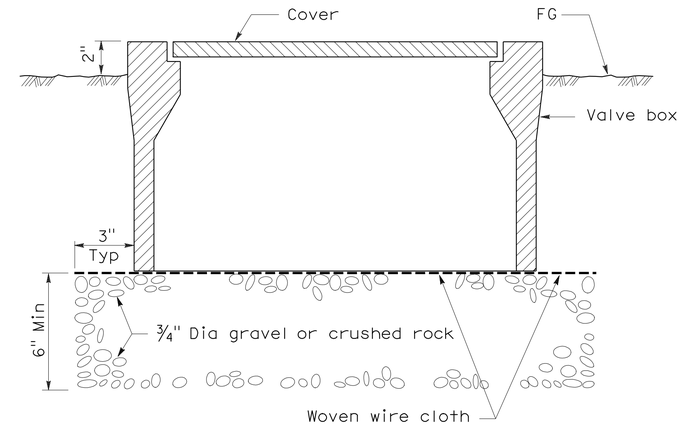

SECTION
VALVE BOX

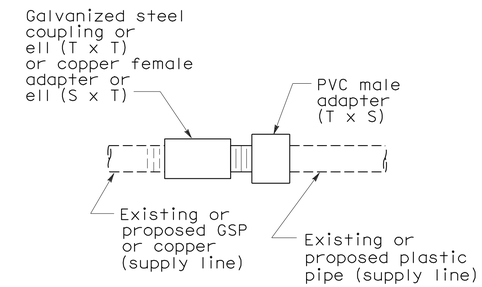

PLAN
GALVANIZED OR COPPER PIPE CONNECTION TO PLASTIC PIPE

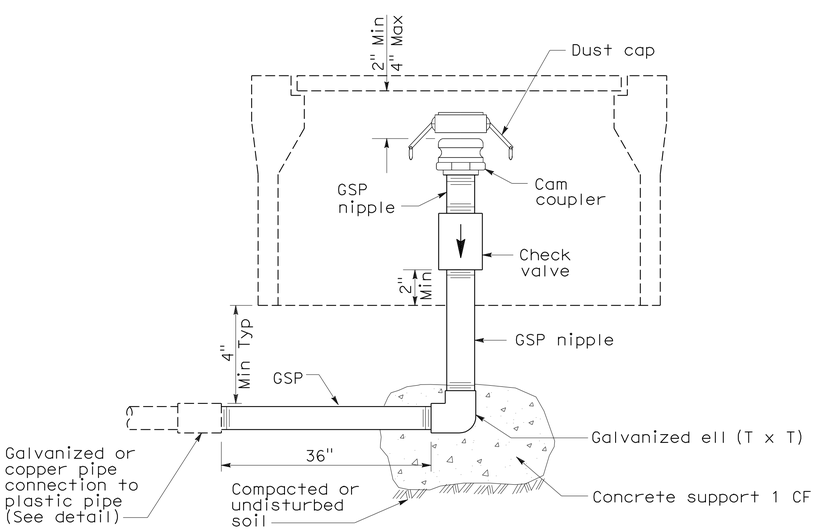

ELEVATION
CAM COUPLER ASSEMBLY

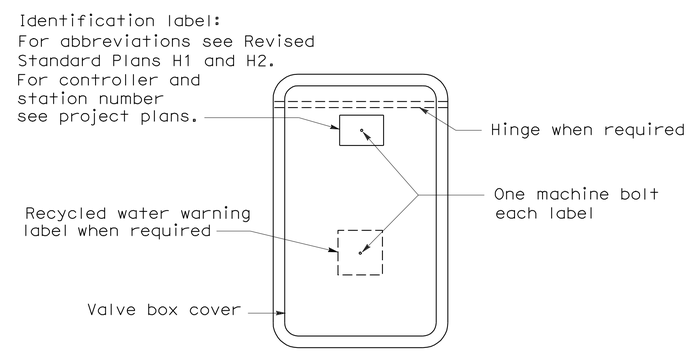

PLAN

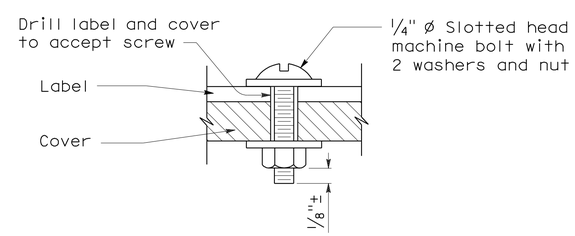

SECTION
VALVE BOX IDENTIFICATION

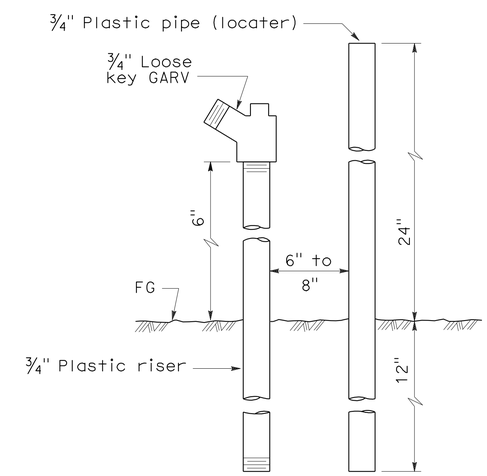

ELEVATION
FLUSH VALVE

STATE OF CALIFORNIA
DEPARTMENT OF TRANSPORTATION

PLANTING AND IRRIGATION DETAILS

NO SCALE

RSP H7 DATED JUNE 5, 2009 SUPERSEDES STANDARD PLAN H7
DATED MAY 1, 2006 - PAGE 207 OF THE STANDARD PLANS BOOK DATED MAY 2006.

REVISED STANDARD PLAN RSP H7

2006 REVISED STANDARD PLAN RSP H7

5-28-09

DIST	COUNTY	ROUTE	POST MILES TOTAL PROJECT	SHEET NO.	TOTAL SHEETS
04	SCI	152	6.1/6.5	28	32

Gregory A. Balzer
LICENSED LANDSCAPE ARCHITECT

June 5, 2009
PLANS APPROVAL DATE

LICENSED LANDSCAPE ARCHITECT Gregory A. Balzer 2576 Gregory A. Balzer 10-01-11 Expiration 2-28-11 Renewal date 5-14-09 Date STATE OF CALIFORNIA

The State of California or its officers or agents shall not be responsible for the accuracy or completeness of electronic copies of this plan sheet.

To accompany plans dated 6-13-11

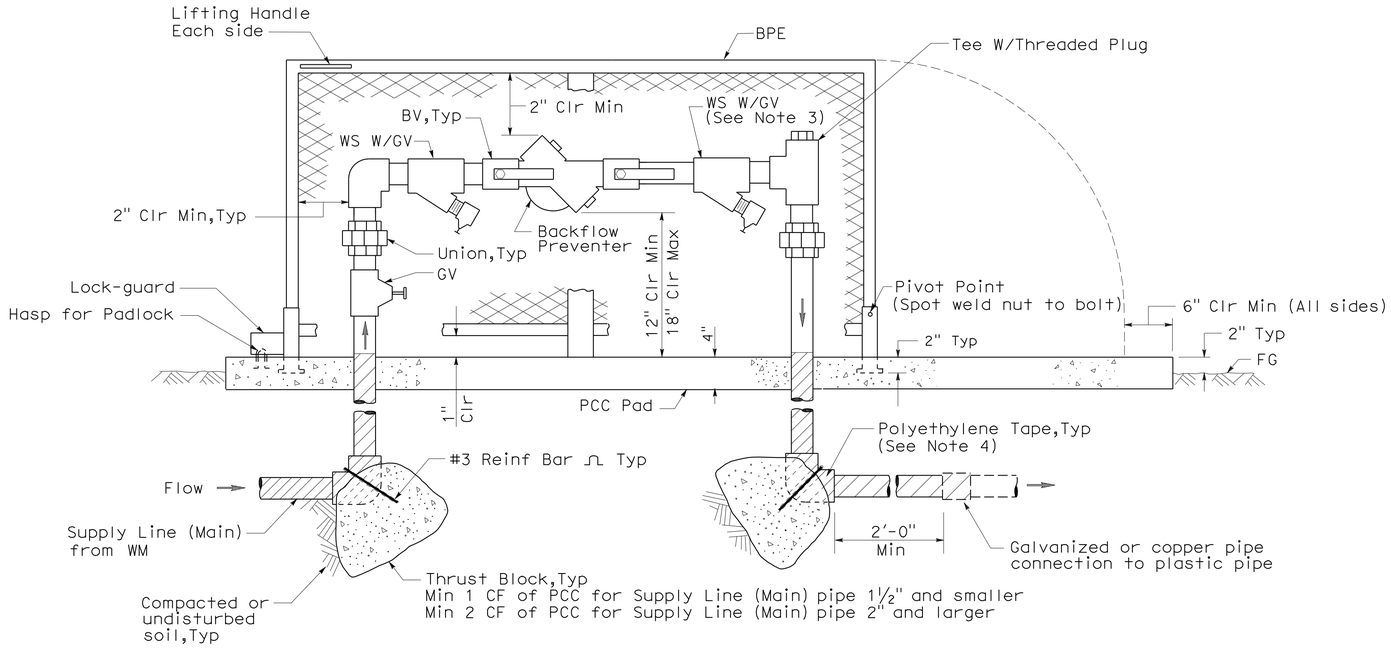

ELEVATION

BACKFLOW PREVENTER ASSEMBLY IN ENCLOSURE (ONE PIECE)

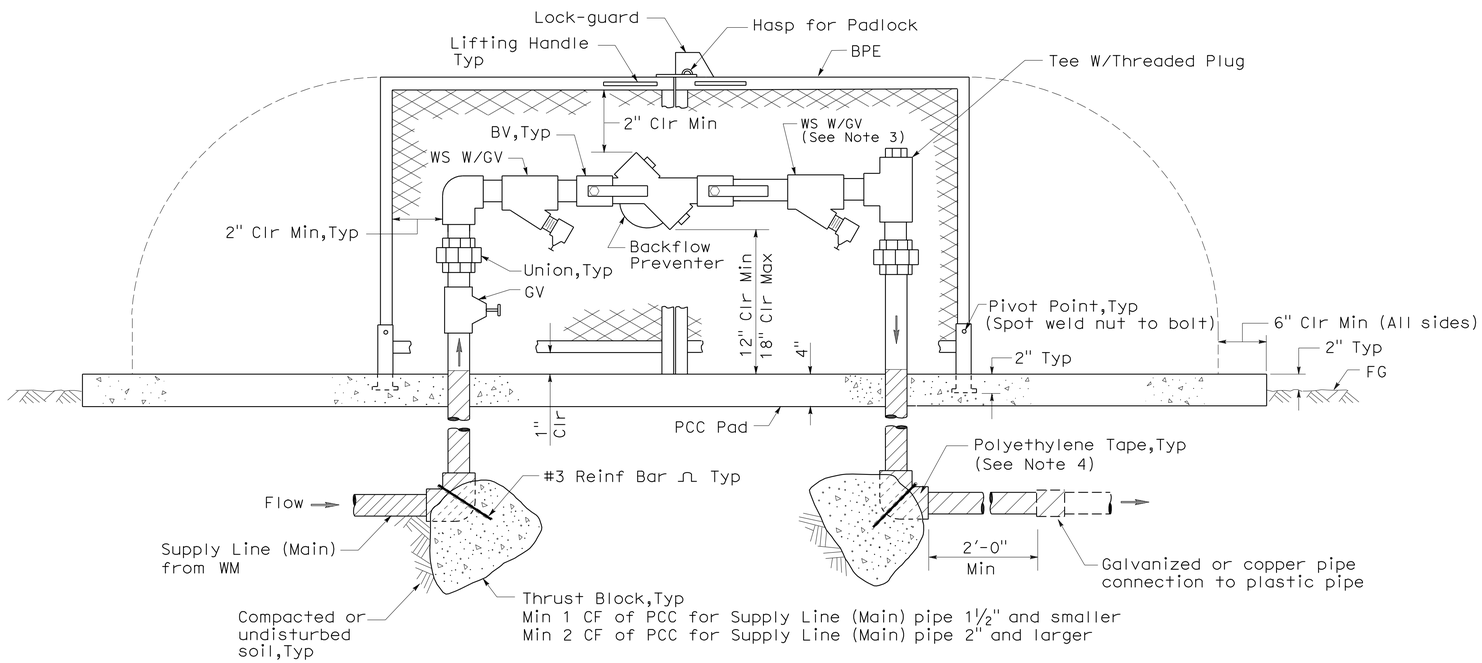

ELEVATION

BACKFLOW PREVENTER ASSEMBLY IN ENCLOSURE (TWO PIECE)

NOTES:

1. Wye strainer and fittings must be the same size as the backflow preventer shown on the plans.
2. Backflow preventer assembly manifold pipe must be the same pipe as the supply line (main) pipe to be installed from the water meter to the backflow preventer assembly.
3. Wye strainer location shown downstream of the backflow preventer is for District 11 projects only.
4. All metal in contact with soil and Portland Cement Concrete must be polyethylene wrapped using 2" wide plastic backed adhesive tape 20 mil thick with ½" overlap.

STATE OF CALIFORNIA
DEPARTMENT OF TRANSPORTATION

PLANTING AND IRRIGATION DETAILS

NO SCALE

RSP H8 DATED JUNE 5, 2009 SUPERSEDES STANDARD PLAN H8
DATED MAY 1, 2006 - PAGE 208 OF THE STANDARD PLANS BOOK DATED MAY 2006.

REVISED STANDARD PLAN RSP H8

2006 REVISED STANDARD PLAN RSP H8

5-28-09

DIST	COUNTY	ROUTE	POST MILES TOTAL PROJECT	SHEET NO.	TOTAL SHEETS
04	SCI	152	6.1/6.5	29	32

Randell D. Hiatt
REGISTERED CIVIL ENGINEER

June 6, 2008
PLANS APPROVAL DATE

REGISTERED PROFESSIONAL ENGINEER
Randell D. Hiatt
No. C50200
Exp. 6-30-09
CIVIL
STATE OF CALIFORNIA

The State of California or its officers or agents shall not be responsible for the accuracy or completeness of electronic copies of this plan sheet.

To accompany plans dated 6-13-11

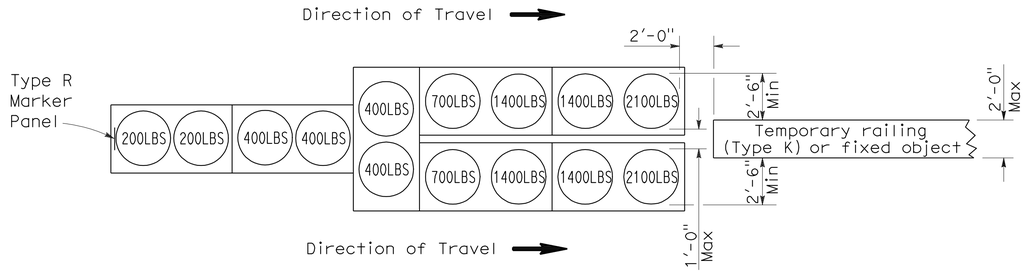

ARRAY 'TU14'

Approach speed 45 mph or more

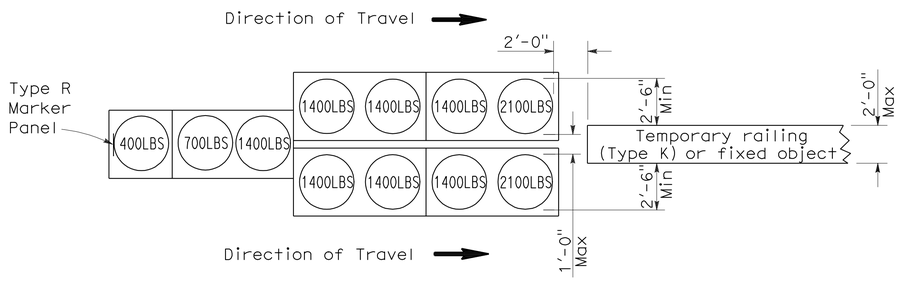

ARRAY 'TU11'

Approach speed less than 45 mph

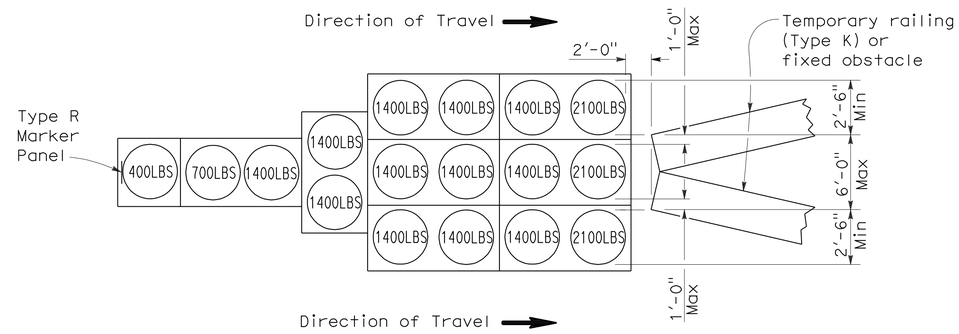

ARRAY 'TU17'

Approach speed less than 45 mph

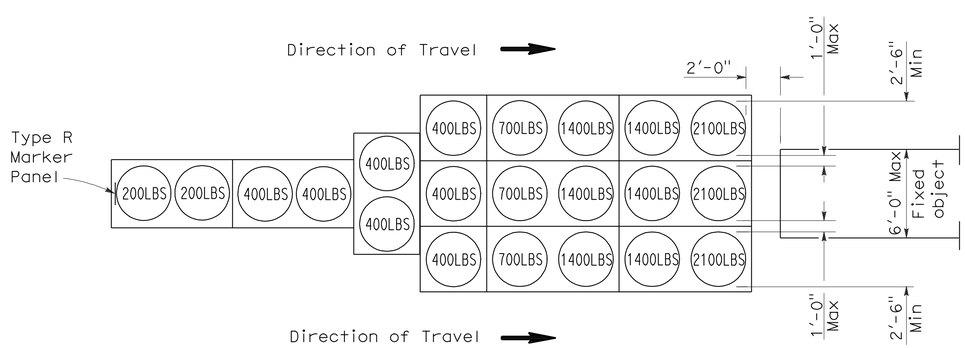

ARRAY 'TU21'

Approach speed 45 mph or more

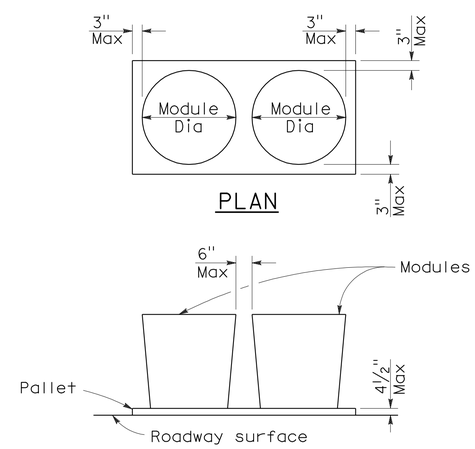

PLAN

ELEVATION

CRASH CUSHION PALLET DETAIL

See Note 7

NOTES:

1. (XXX) Indicates sand filled module location and weight of sand in pounds for each module. Module spacing is based on the greater diameter of the module.
2. All sand weights are nominal.
3. Temporary crash cushion arrays shall not encroach on the traveled way.
4. Place the top of Type R marker panel 1" below the module lid.
5. Refer to Standard Plan A73B for marker details.
6. Approach speeds indicated conform to NCHRP 350 Report criteria.
7. Use of pallets is optional.

STATE OF CALIFORNIA
DEPARTMENT OF TRANSPORTATION

TEMPORARY CRASH CUSHION, SAND FILLED (UNIDIRECTIONAL)

NO SCALE

RSP T1A DATED JUNE 6, 2008 SUPERSEDES STANDARD PLAN T1A
DATED MAY 1, 2006 - PAGE 211 OF THE STANDARD PLANS BOOK DATED MAY 2006.

REVISED STANDARD PLAN RSP T1A

2006 REVISED STANDARD PLAN RSP T1A

DIST	COUNTY	ROUTE	POST MILES TOTAL PROJECT	SHEET NO.	TOTAL SHEETS
04	SCI	152	6.1/6.5	30	32

Randell D. Hiatt
REGISTERED CIVIL ENGINEER

June 6, 2008
PLANS APPROVAL DATE

REGISTERED PROFESSIONAL ENGINEER
Randell D. Hiatt
No. C50200
Exp. 6-30-09
CIVIL
STATE OF CALIFORNIA

The State of California or its officers or agents shall not be responsible for the accuracy or completeness of electronic copies of this plan sheet.

To accompany plans dated 6-13-11

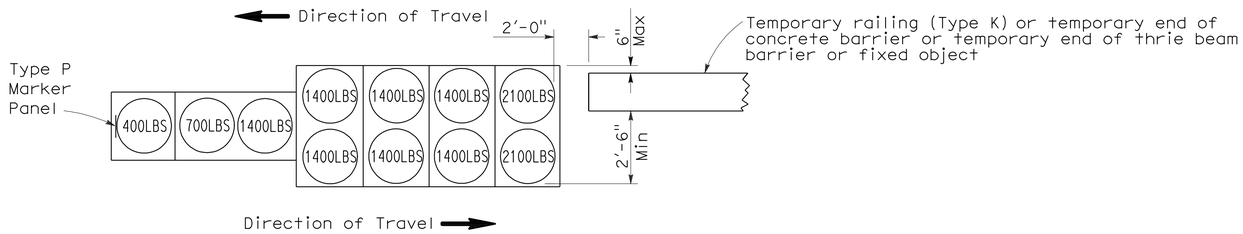

ARRAY 'TB11'

Approach speed less than 45 mph

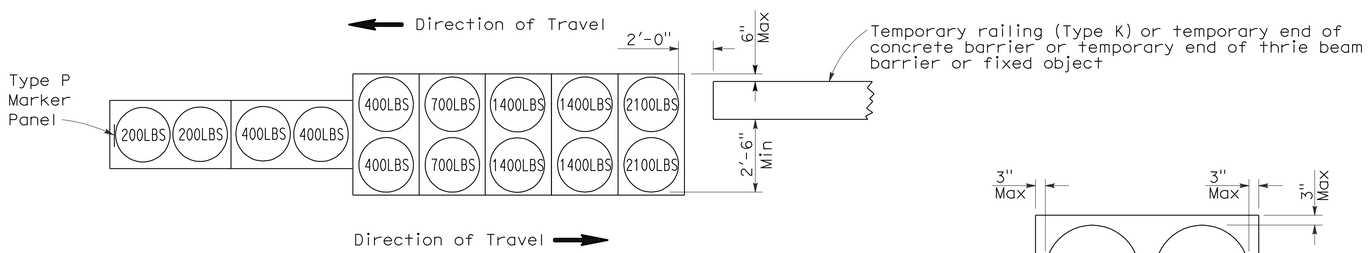

ARRAY 'TB14'

Approach speed 45 mph or more

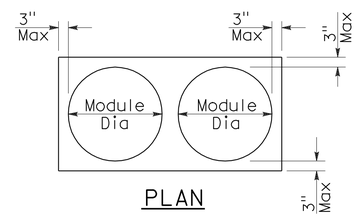

PLAN

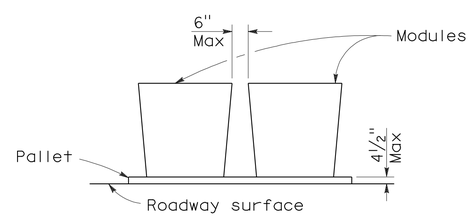

ELEVATION

CRASH CUSHION PALLET DETAIL

See Note 7

NOTES:

1. (XXX) Indicates sand filled module location and weight of sand in pounds for each module. Module spacing is based on the greater diameter of the module.
2. All sand weights are nominal.
3. Temporary crash cushion arrays shall not encroach on the traveled way.
4. Place the Type P marker panel so that the bottom of the panel rests upon the pallet.
5. Refer to Standard Plan A73B for marker details.
6. Approach speeds indicated conform to NCHRP 350 Report criteria.
7. Use of pallets is optional.

STATE OF CALIFORNIA
DEPARTMENT OF TRANSPORTATION

TEMPORARY CRASH CUSHION, SAND FILLED (BIDIRECTIONAL)

NO SCALE

RSP T1B DATED JUNE 6, 2008 SUPERSEDES STANDARD PLAN T1B
DATED MAY 1, 2006 - PAGE 212 OF THE STANDARD PLANS BOOK DATED MAY 2006.

REVISED STANDARD PLAN RSP T1B

2006 REVISED STANDARD PLAN RSP T1B

5-15-08

DIST	COUNTY	ROUTE	POST MILES TOTAL PROJECT	SHEET NO.	TOTAL SHEETS
04	SCI	152	6.1/6.5	31	32

Randell D. Hiatt
REGISTERED CIVIL ENGINEER

June 6, 2008
PLANS APPROVAL DATE

REGISTERED PROFESSIONAL ENGINEER
Randell D. Hiatt
No. C50200
Exp. 6-30-09
CIVIL
STATE OF CALIFORNIA

The State of California or its officers or agents shall not be responsible for the accuracy or completeness of electronic copies of this plan sheet.

To accompany plans dated 6-13-11

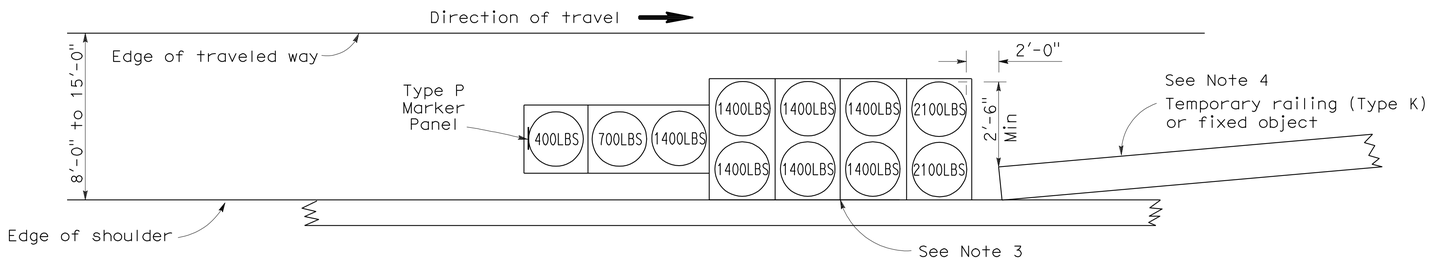

ARRAY 'TS11'

Approach speed less than 45 mph
See Note 9

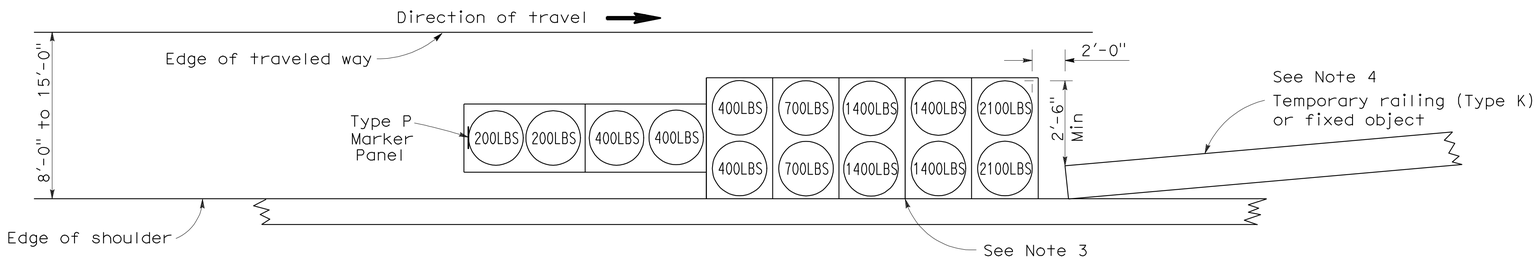

ARRAY 'TS14'

Approach speed 45 mph or more
See Note 9

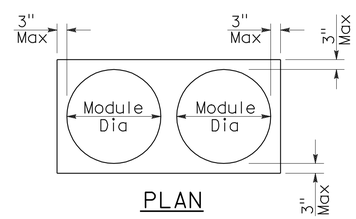

PLAN

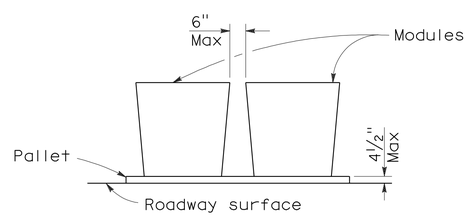

ELEVATION

CRASH CUSHION PALLET DETAIL

See Note 11

NOTES:

1. (XXX) Indicates sand filled module location and weight of sand in pounds for each module. Module spacing is based on the greater diameter of the module.
2. All sand weights are nominal.
3. The temporary crash cushion arrays shown on this plan shall be used only in locations where there will be traffic on one side of the temporary crash cushion array.
4. If the fixed object or approach end of the temporary railing is less than 15'-0" from the edge of traveled way, a temporary crash cushion is required in a construction or work zone.
5. Temporary crash cushion arrays shall not encroach on the traveled way.
6. Arrays for median shoulders shall conform to details shown on this plan for outside shoulders.
7. Place the Type P marker panel so that the bottom of the panel rests upon the pallet and faces traffic.
8. Refer to Standard Plan A73B for marker details.
9. For shoulder widths less than 8'-0", appropriate approved crash cushion protection, other than sand filled modules, shall be provided at fixed objects and at approach ends of temporary railing. The specific type of crash cushion shall be as shown on the project plans or as specified in the Special Provisions, or if not shown on the project plans or specified in the Special Provisions, shall be as approved by the Engineer.
10. Approach speeds indicated conform to NCHRP 350 Report criteria.
11. Use of pallets is optional.

STATE OF CALIFORNIA
DEPARTMENT OF TRANSPORTATION

TEMPORARY CRASH CUSHION, SAND FILLED (SHOULDER INSTALLATIONS)

NO SCALE

RSP T2 DATED JUNE 6, 2008 SUPERSEDES STANDARD PLAN T2
DATED MAY 1, 2006 - PAGE 213 OF THE STANDARD PLANS BOOK DATED MAY 2006.

REVISED STANDARD PLAN RSP T2

2006 REVISED STANDARD PLAN RSP T2

5-15-08

DIST	COUNTY	ROUTE	POST MILES TOTAL PROJECT	SHEET NO.	TOTAL SHEETS
04	SCI	152	6.1/6.5	32	32

LICENSED LANDSCAPE ARCHITECT

April 3, 2009
PLANS APPROVAL DATE

LICENSED LANDSCAPE ARCHITECT — Robert B. Schott — 3025 — Signature — 11-30-10 Renewal Date — 2-25-09 Date — STATE OF CALIFORNIA

The State of California or its officers or agents shall not be responsible for the accuracy or completeness of electronic copies of this plan sheet.

To accompany plans dated 6-13-11

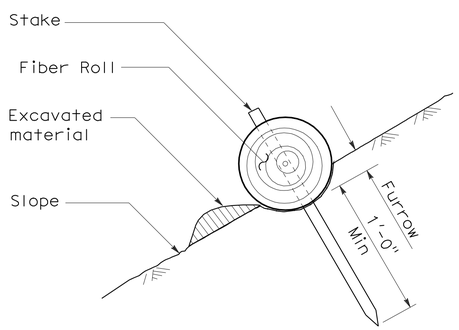

SECTION

TEMPORARY FIBER ROLL (TYPE 1)

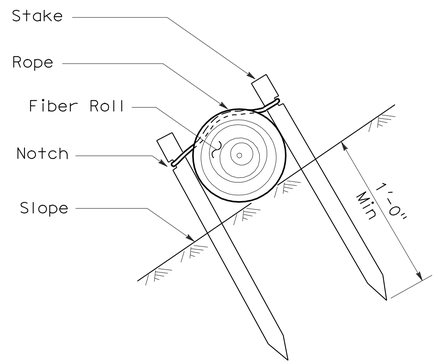

SECTION

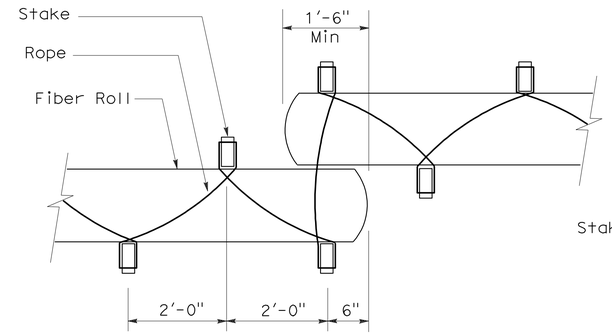

PLAN

TEMPORARY FIBER ROLL (TYPE 2)

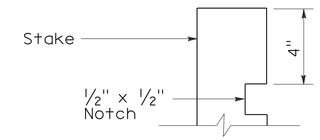

ELEVATION

STAKE NOTCH DETAIL

NOTES:

1. Temporary fiber roll spacing varies depending upon slope inclination.
2. Installations shown in the perspectives are for slope inclination of 10:1 and steeper.

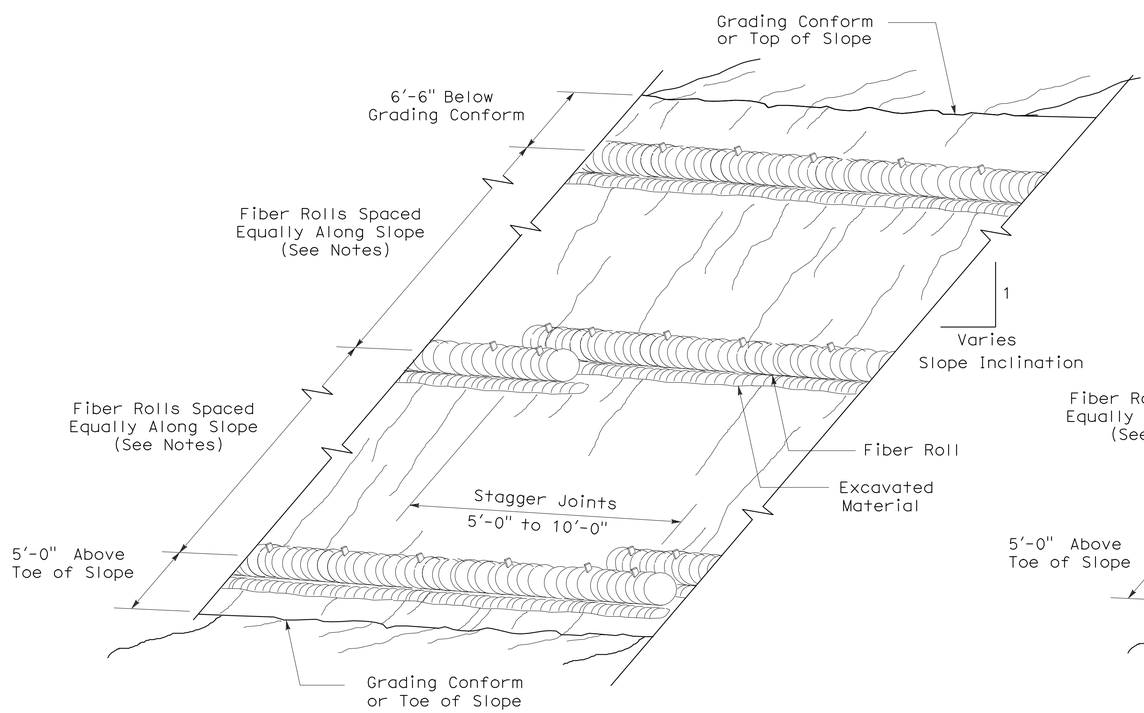

PERSPECTIVE

TEMPORARY FIBER ROLL (TYPE 1)

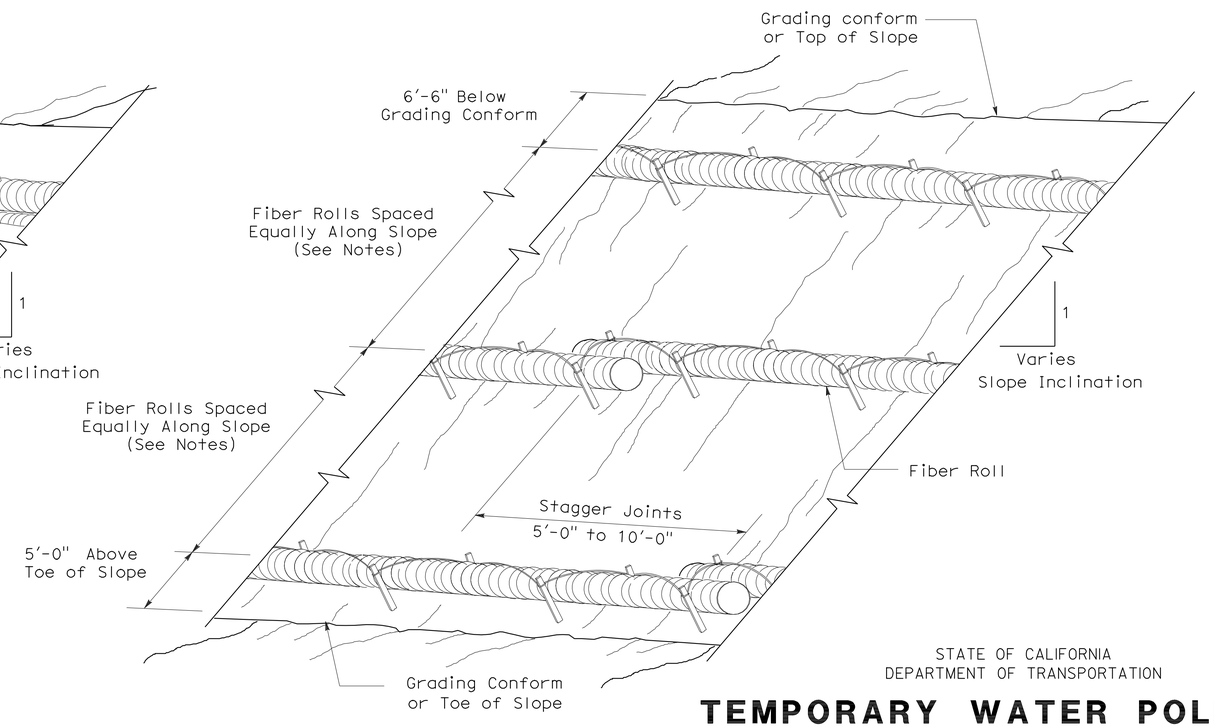

PERSPECTIVE

TEMPORARY FIBER ROLL (TYPE 2)

STATE OF CALIFORNIA
DEPARTMENT OF TRANSPORTATION

TEMPORARY WATER POLLUTION CONTROL DETAILS (TEMPORARY FIBER ROLL)

NO SCALE

RSP T56 DATED APRIL 3, 2009 SUPERSEDES STANDARD PLAN T56
DATED MAY 1, 2006 - PAGE 232 OF THE STANDARD PLANS BOOK DATED MAY 2006.

REVISED STANDARD PLAN RSP T56

2006 REVISED STANDARD PLAN RSP T56

2-23-09