Dist	COUNTY	ROUTE	POST MILES TOTAL PROJECT	SHEET No.	TOTAL SHEETS
04	CC	680	0.0/R2.8	301	504

REGISTERED CIVIL ENGINEER 8/7/09 DATE

2-1-10
PLANS APPROVAL DATE

REGISTERED PROFESSIONAL ENGINEER Z. Mangat No. 44843 Exp 3-31-10 CIVIL STATE OF CALIFORNIA

THE STATE OF CALIFORNIA OR ITS OFFICERS OR AGENTS SHALL NOT BE RESPONSIBLE FOR THE ACCURACY OR COMPLETENESS OF SCANNED COPIES OF THIS PLAN SHEET.

FOR ACCURATE RIGHT OF WAY DATA,
CONTACT RIGHT OF WAY ENGINEERING
AT THE DISTRICT OFFICE.

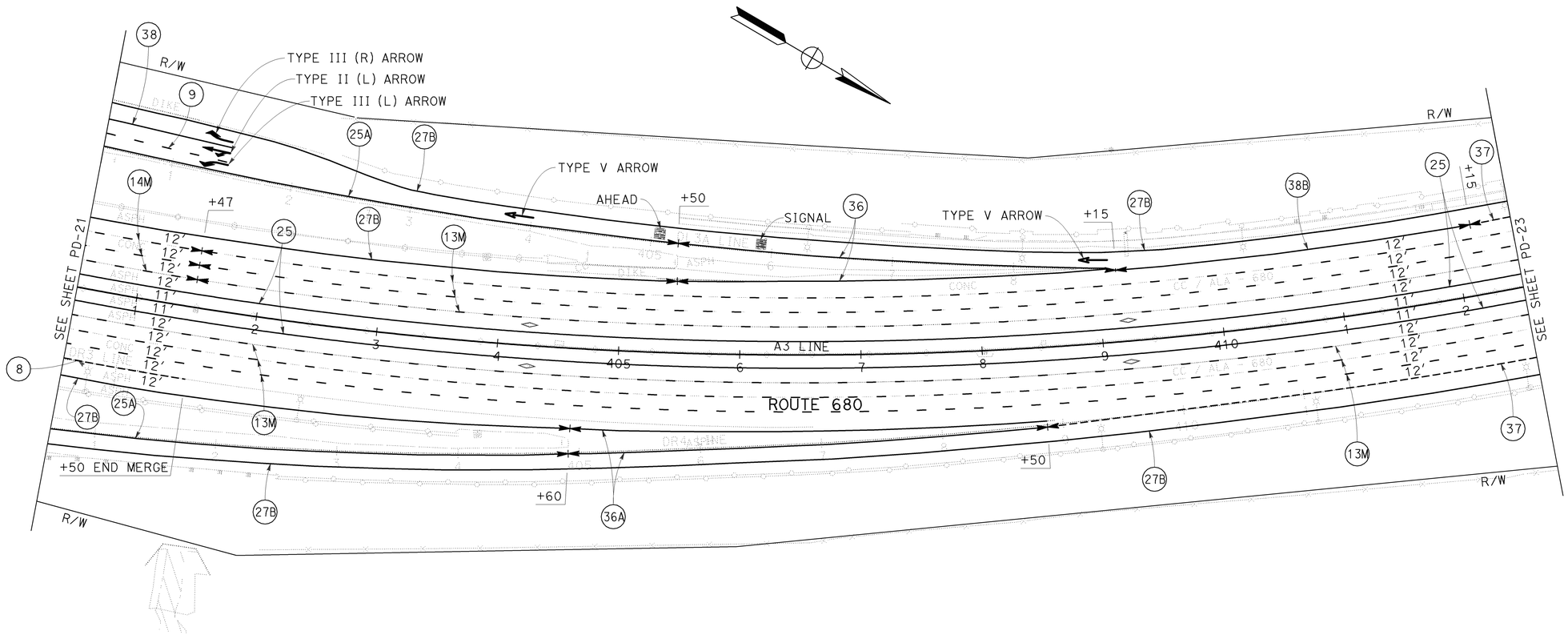

PAVEMENT DELINEATION PLAN

SCALE: 1'' = 50'

FOR NOTES, ABBREVIATIONS AND LEGEND, SEE SHEET PD-1

THIS PLAN ACCURATE FOR PAVEMENT DELINEATION WORK ONLY

PD-22

STATE OF CALIFORNIA - DEPARTMENT OF TRANSPORTATION
Caltrans
DESIGN

FUNCTIONAL SUPERVISOR: ARVIND K. GUPTA
CALCULATED-DESIGNED BY: HOWARD LAI
CHECKED BY: FANNY YEUNG
REVISED BY: RS
DATE REVISED: 7/20/09

LAST REVISION 09-25-09
DATE PLOTTED => 04-FEB-2010
TIME PLOTTED => 13:06

Dist	COUNTY	ROUTE	POST MILES TOTAL PROJECT	SHEET No.	TOTAL SHEETS
04	CC	680	0.0/R2.8	302	504

REGISTERED CIVIL ENGINEER 8/7/09 DATE

2-1-10
PLANS APPROVAL DATE

REGISTERED PROFESSIONAL ENGINEER Z. Mangat No. 44843 Exp 3-31-10 CIVIL STATE OF CALIFORNIA

THE STATE OF CALIFORNIA OR ITS OFFICERS OR AGENTS SHALL NOT BE RESPONSIBLE FOR THE ACCURACY OR COMPLETENESS OF SCANNED COPIES OF THIS PLAN SHEET.

FOR ACCURATE RIGHT OF WAY DATA,
CONTACT RIGHT OF WAY ENGINEERING
AT THE DISTRICT OFFICE.

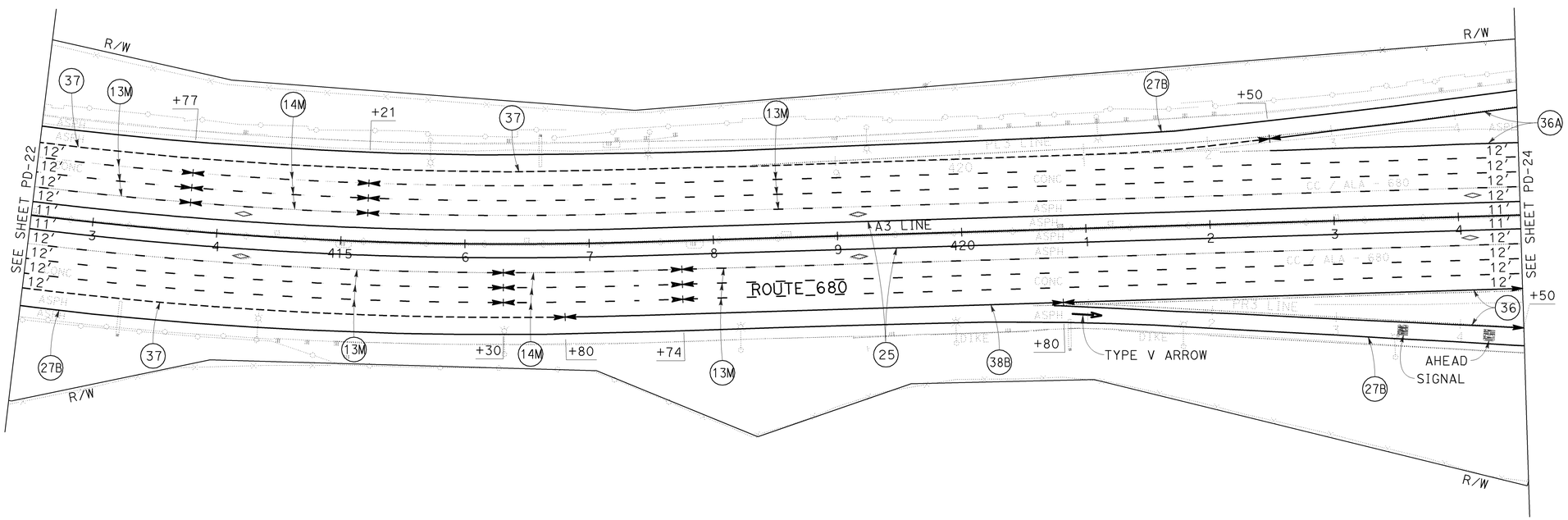

PAVEMENT DELINEATION PLAN

SCALE: 1'' = 50'

FOR NOTES, ABBREVIATIONS AND LEGEND, SEE SHEET PD-1

THIS PLAN ACCURATE FOR PAVEMENT DELINEATION WORK ONLY

PD-23

STATE OF CALIFORNIA - DEPARTMENT OF TRANSPORTATION
Caltrans
DESIGN

FUNCTIONAL SUPERVISOR: ARVIND K. GUPTA

CALCULATED-DESIGNED BY: HOWARD LAI
CHECKED BY: FANNY YEUNG

REVISED BY: RS
DATE REVISED: 7/20/09

LAST REVISION: 09-25-09
DATE PLOTTED => 04-FEB-2010
TIME PLOTTED => 13:06

Dist	COUNTY	ROUTE	POST MILES TOTAL PROJECT	SHEET No.	TOTAL SHEETS
04	CC	680	0.0/R2.8	303	504

REGISTERED CIVIL ENGINEER 8/7/09 DATE

2-1-10
PLANS APPROVAL DATE

REGISTERED PROFESSIONAL ENGINEER Z. Mangat No. 44843 Exp. 3-31-10 CIVIL STATE OF CALIFORNIA

THE STATE OF CALIFORNIA OR ITS OFFICERS OR AGENTS SHALL NOT BE RESPONSIBLE FOR THE ACCURACY OR COMPLETENESS OF SCANNED COPIES OF THIS PLAN SHEET.

FOR ACCURATE RIGHT OF WAY DATA, CONTACT RIGHT OF WAY ENGINEERING AT THE DISTRICT OFFICE.

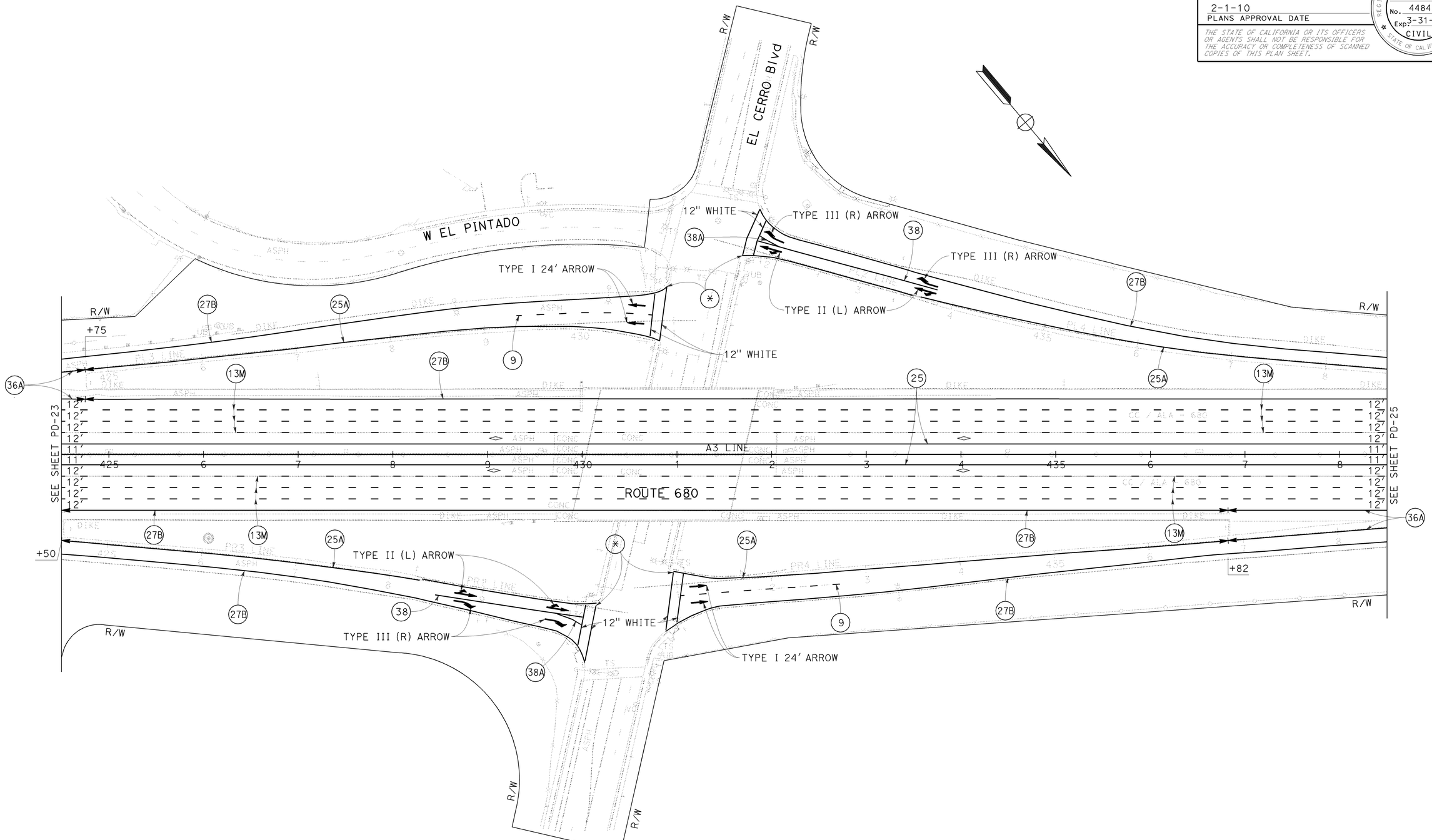

PAVEMENT DELINEATION PLAN

SCALE: 1'' = 50'

FOR NOTES, ABBREVIATIONS AND LEGEND, SEE SHEET PD-1

THIS PLAN ACCURATE FOR PAVEMENT DELINEATION WORK ONLY

PD-24

HOWARD LAI	RS
FANNY YEUNG	7/20/09
CALCULATED-DESIGNED BY	REVISED BY
CHECKED BY	DATE REVISED
FUNCTIONAL SUPERVISOR	
ARVIND K. GUPTA	

STATE OF CALIFORNIA - DEPARTMENT OF TRANSPORTATION

Caltrans

DESIGN

LAST REVISION 09-25-09 | DATE PLOTTED => 04-FEB-2010 | TIME PLOTTED => 13:06

Dist	COUNTY	ROUTE	POST MILES TOTAL PROJECT	SHEET No.	TOTAL SHEETS
04	CC	680	0.0/R2.8	304	504

REGISTERED CIVIL ENGINEER 8/7/09 DATE

2-1-10
PLANS APPROVAL DATE

REGISTERED PROFESSIONAL ENGINEER Z. Mangat No. 44843 Exp 3-31-10 CIVIL STATE OF CALIFORNIA

THE STATE OF CALIFORNIA OR ITS OFFICERS OR AGENTS SHALL NOT BE RESPONSIBLE FOR THE ACCURACY OR COMPLETENESS OF SCANNED COPIES OF THIS PLAN SHEET.

FOR ACCURATE RIGHT OF WAY DATA,
CONTACT RIGHT OF WAY ENGINEERING
AT THE DISTRICT OFFICE.

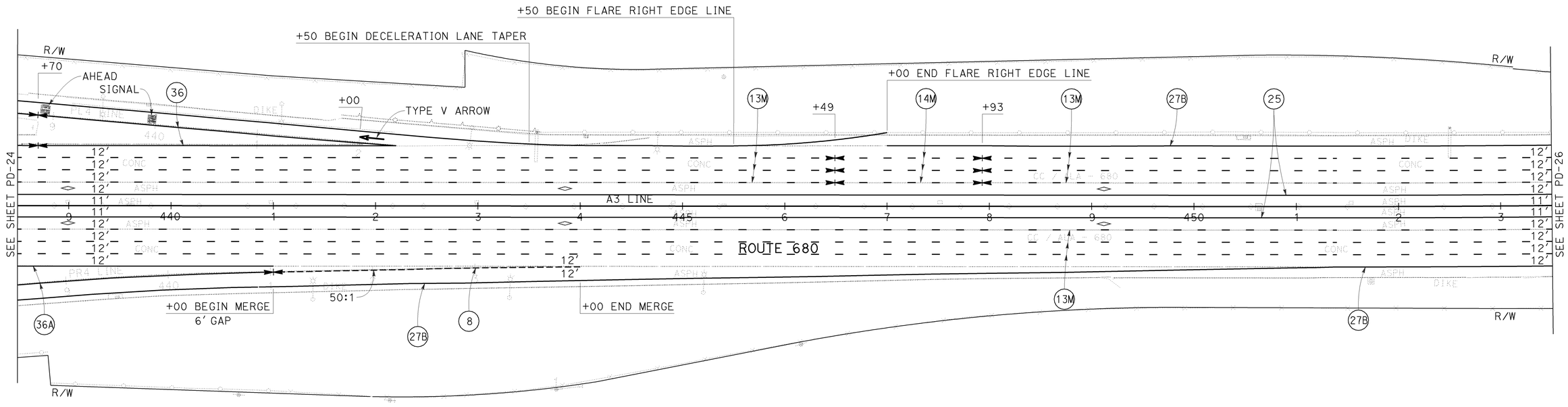

PAVEMENT DELINEATION PLAN

SCALE: 1'' = 50'

FOR NOTES, ABBREVIATIONS AND LEGEND, SEE SHEET PD-1

THIS PLAN ACCURATE FOR PAVEMENT DELINEATION WORK ONLY

PD-25

STATE OF CALIFORNIA - DEPARTMENT OF TRANSPORTATION
Caltrans
DESIGN

FUNCTIONAL SUPERVISOR: ARVIND K. GUPTA
CALCULATED-DESIGNED BY: HOWARD LAI
CHECKED BY: FANNY YEUNG
REVISED BY: RS
DATE REVISED: 7/20/09

LAST REVISION 09-25-09
DATE PLOTTED => 04-FEB-2010
TIME PLOTTED => 13:06

Dist	COUNTY	ROUTE	POST MILES TOTAL PROJECT	SHEET No.	TOTAL SHEETS
04	CC	680	0.0/R2.8	305	504

REGISTERED CIVIL ENGINEER 8/7/09 DATE

2-1-10
PLANS APPROVAL DATE

REGISTERED PROFESSIONAL ENGINEER Z. Mangat No. 44843 Exp 3-31-10 CIVIL STATE OF CALIFORNIA

THE STATE OF CALIFORNIA OR ITS OFFICERS OR AGENTS SHALL NOT BE RESPONSIBLE FOR THE ACCURACY OR COMPLETENESS OF SCANNED COPIES OF THIS PLAN SHEET.

FOR ACCURATE RIGHT OF WAY DATA,
CONTACT RIGHT OF WAY ENGINEERING
AT THE DISTRICT OFFICE.

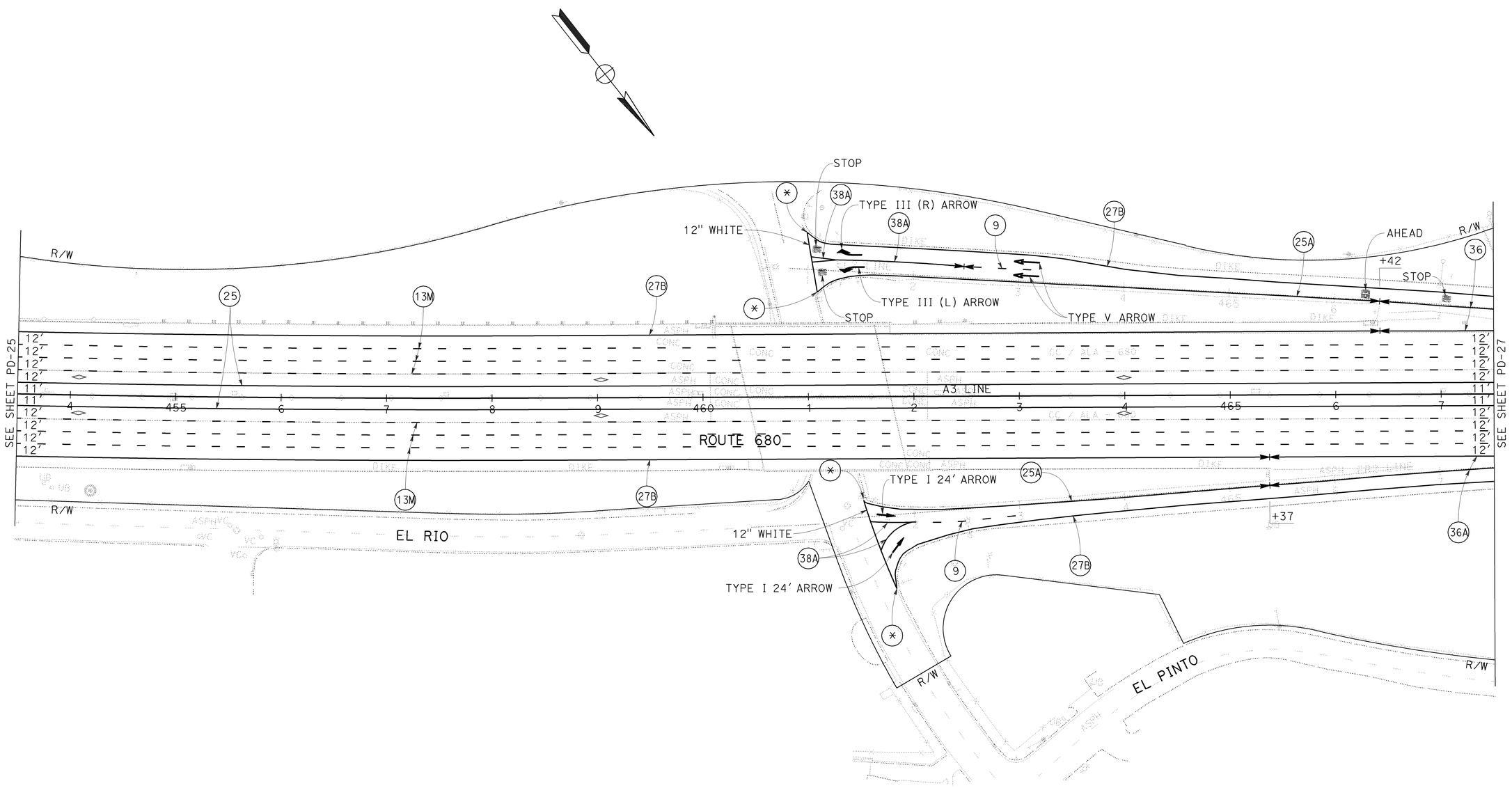

PAVEMENT DELINEATION PLAN

SCALE: 1'' = 50'

FOR NOTES, ABBREVIATIONS AND LEGEND, SEE SHEET PD-1

THIS PLAN ACCURATE FOR PAVEMENT DELINEATION WORK ONLY

PD-26

HOWARD LAI	REVISED BY: RS
FANNY YEUNG	DATE REVISED: 7/20/09
CALCULATED-DESIGNED BY	
CHECKED BY	
FUNCTIONAL SUPERVISOR: ARVIND K. GUPTA	

STATE OF CALIFORNIA - DEPARTMENT OF TRANSPORTATION
Caltrans DESIGN

LAST REVISION 09-25-09 | DATE PLOTTED => 04-FEB-2010 | TIME PLOTTED => 13:07

Dist	COUNTY	ROUTE	POST MILES TOTAL PROJECT	SHEET No.	TOTAL SHEETS
04	CC	680	0.0/R2.8	306	504

Zoren S. Mangat 8/7/09
REGISTERED CIVIL ENGINEER DATE

2-1-10
PLANS APPROVAL DATE

REGISTERED PROFESSIONAL ENGINEER Z. Mangat No. 44843 Exp 3-31-10 CIVIL STATE OF CALIFORNIA

THE STATE OF CALIFORNIA OR ITS OFFICERS OR AGENTS SHALL NOT BE RESPONSIBLE FOR THE ACCURACY OR COMPLETENESS OF SCANNED COPIES OF THIS PLAN SHEET.

FOR ACCURATE RIGHT OF WAY DATA,
CONTACT RIGHT OF WAY ENGINEERING
AT THE DISTRICT OFFICE.

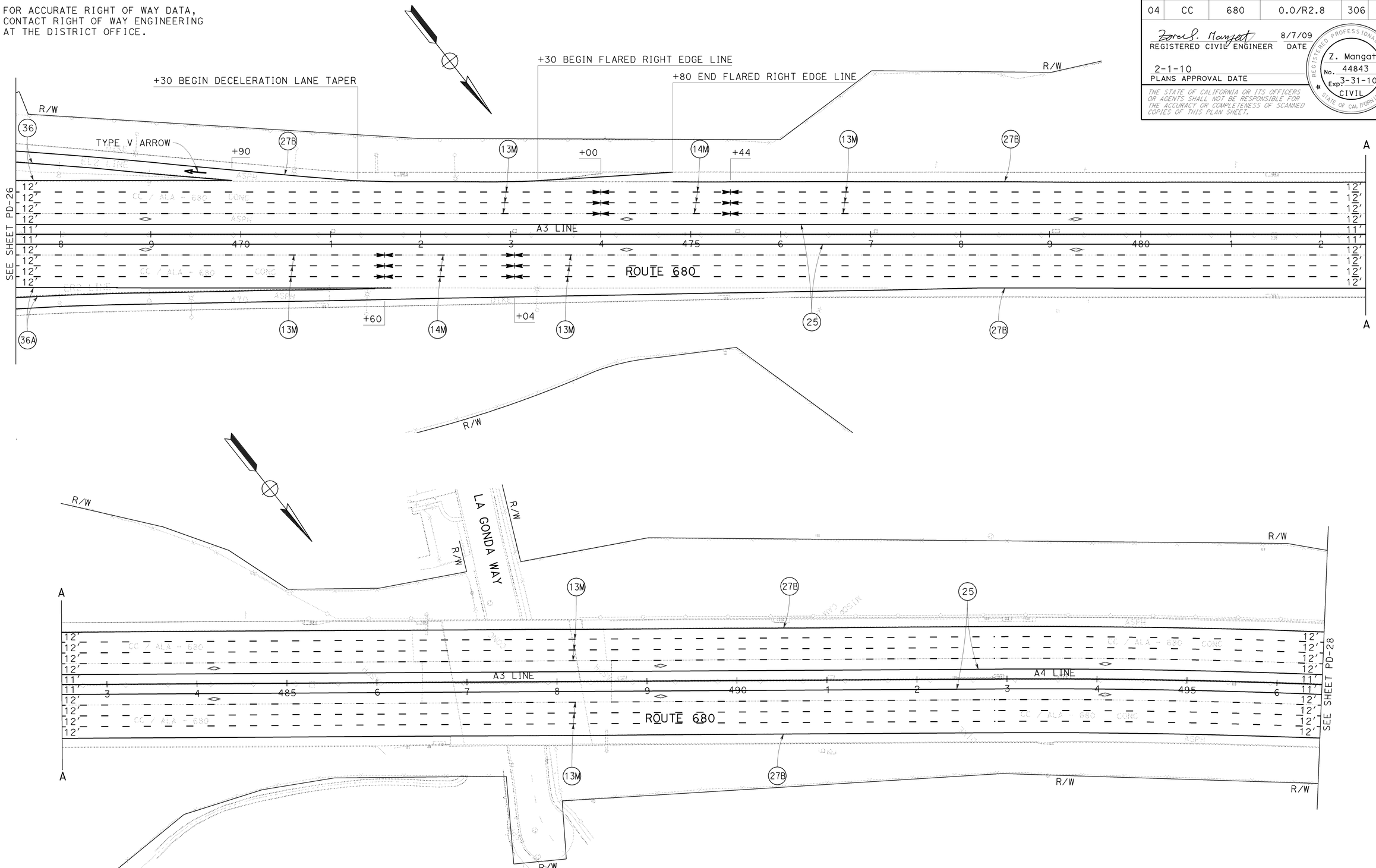

PAVEMENT DELINEATION PLAN

SCALE: 1'' = 50'

FOR NOTES, ABBREVIATIONS AND LEGEND, SEE SHEET PD-1

THIS PLAN ACCURATE FOR PAVEMENT DELINEATION WORK ONLY

PD-27

REVISED BY	DATE REVISED
RS	7/20/09

HOWARD LAI — FANNY YEUNG — CALCULATED-DESIGNED BY / CHECKED BY

FUNCTIONAL SUPERVISOR: ARVIND K. GUPTA

STATE OF CALIFORNIA - DEPARTMENT OF TRANSPORTATION — DESIGN — Caltrans

LAST REVISION 09-28-09 — DATE PLOTTED => 04-FEB-2010 — TIME PLOTTED => 13:07

Dist	COUNTY	ROUTE	POST MILES TOTAL PROJECT	SHEET No.	TOTAL SHEETS
04	CC	680	0.0/R2.8	307	504

Zorel S. Mangat 8/7/09
REGISTERED CIVIL ENGINEER DATE

2-1-10
PLANS APPROVAL DATE

REGISTERED PROFESSIONAL ENGINEER
Z. Mangat
No. 44843
Exp 3-31-10
CIVIL
STATE OF CALIFORNIA

THE STATE OF CALIFORNIA OR ITS OFFICERS OR AGENTS SHALL NOT BE RESPONSIBLE FOR THE ACCURACY OR COMPLETENESS OF SCANNED COPIES OF THIS PLAN SHEET.

FOR ACCURATE RIGHT OF WAY DATA,
CONTACT RIGHT OF WAY ENGINEERING
AT THE DISTRICT OFFICE.

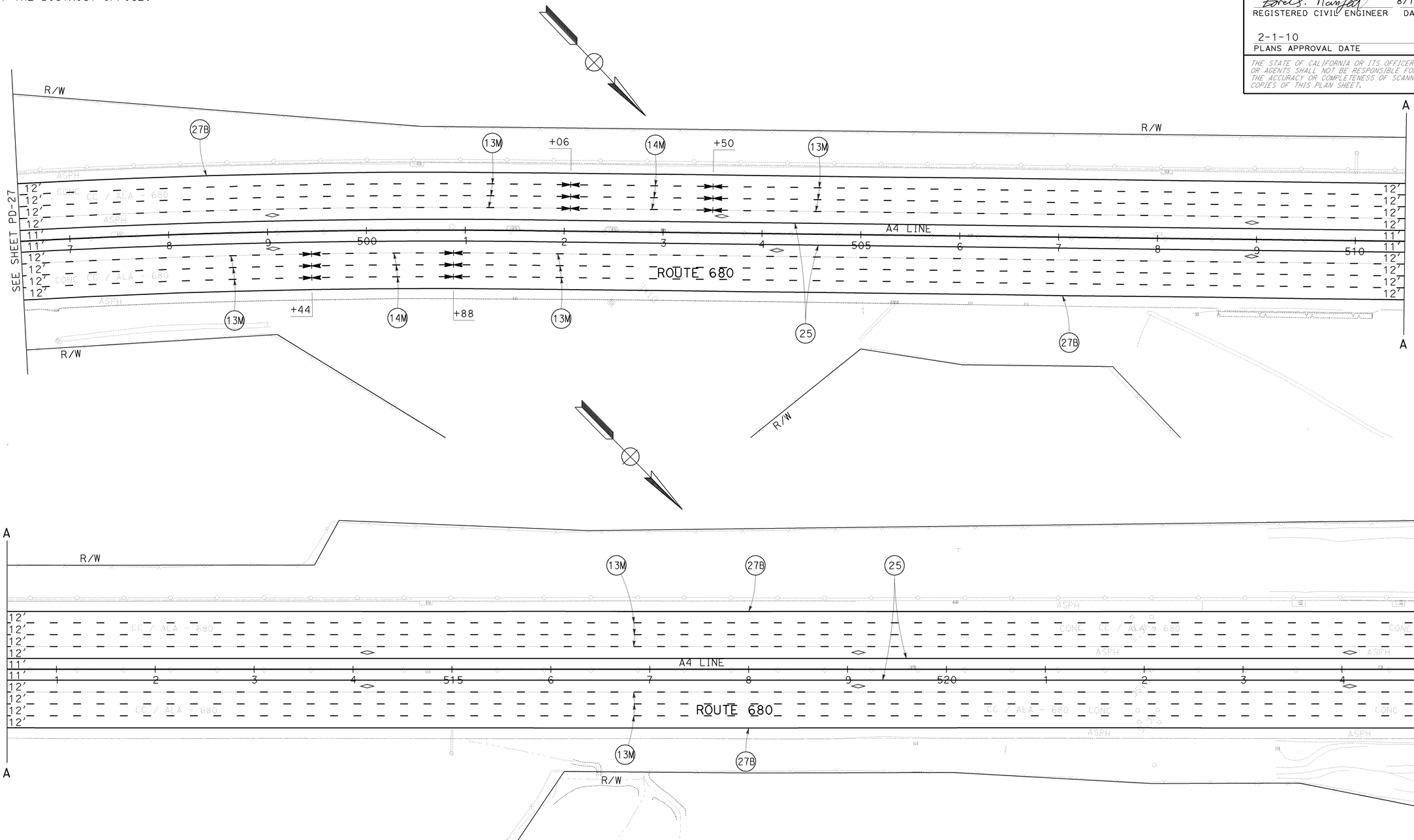

PAVEMENT DELINEATION PLAN

SCALE: 1'' = 50'

FOR NOTES, ABBREVIATIONS AND LEGEND, SEE SHEET PD-1

THIS PLAN ACCURATE FOR PAVEMENT DELINEATION WORK ONLY

PD-28

REVISED BY	DATE REVISED
RS	7/20/09

CALCULATED-DESIGNED BY	CHECKED BY
HOWARD LAI	FANNY YEUNG

FUNCTIONAL SUPERVISOR: ARVIND K. GUPTA

STATE OF CALIFORNIA - DEPARTMENT OF TRANSPORTATION
Caltrans
DESIGN

LAST REVISION 09-28-09 | DATE PLOTTED => 04-FEB-2010 | TIME PLOTTED => 13:07

Dist	COUNTY	ROUTE	POST MILES TOTAL PROJECT	SHEET No.	TOTAL SHEETS
04	CC	680	0.0/R2.8	308	504

REGISTERED CIVIL ENGINEER 8/7/09 DATE

2-1-10
PLANS APPROVAL DATE

REGISTERED PROFESSIONAL ENGINEER Z. Mangat No. 44843 Exp 3-31-10 CIVIL STATE OF CALIFORNIA

THE STATE OF CALIFORNIA OR ITS OFFICERS OR AGENTS SHALL NOT BE RESPONSIBLE FOR THE ACCURACY OR COMPLETENESS OF SCANNED COPIES OF THIS PLAN SHEET.

FOR ACCURATE RIGHT OF WAY DATA,
CONTACT RIGHT OF WAY ENGINEERING
AT THE DISTRICT OFFICE.

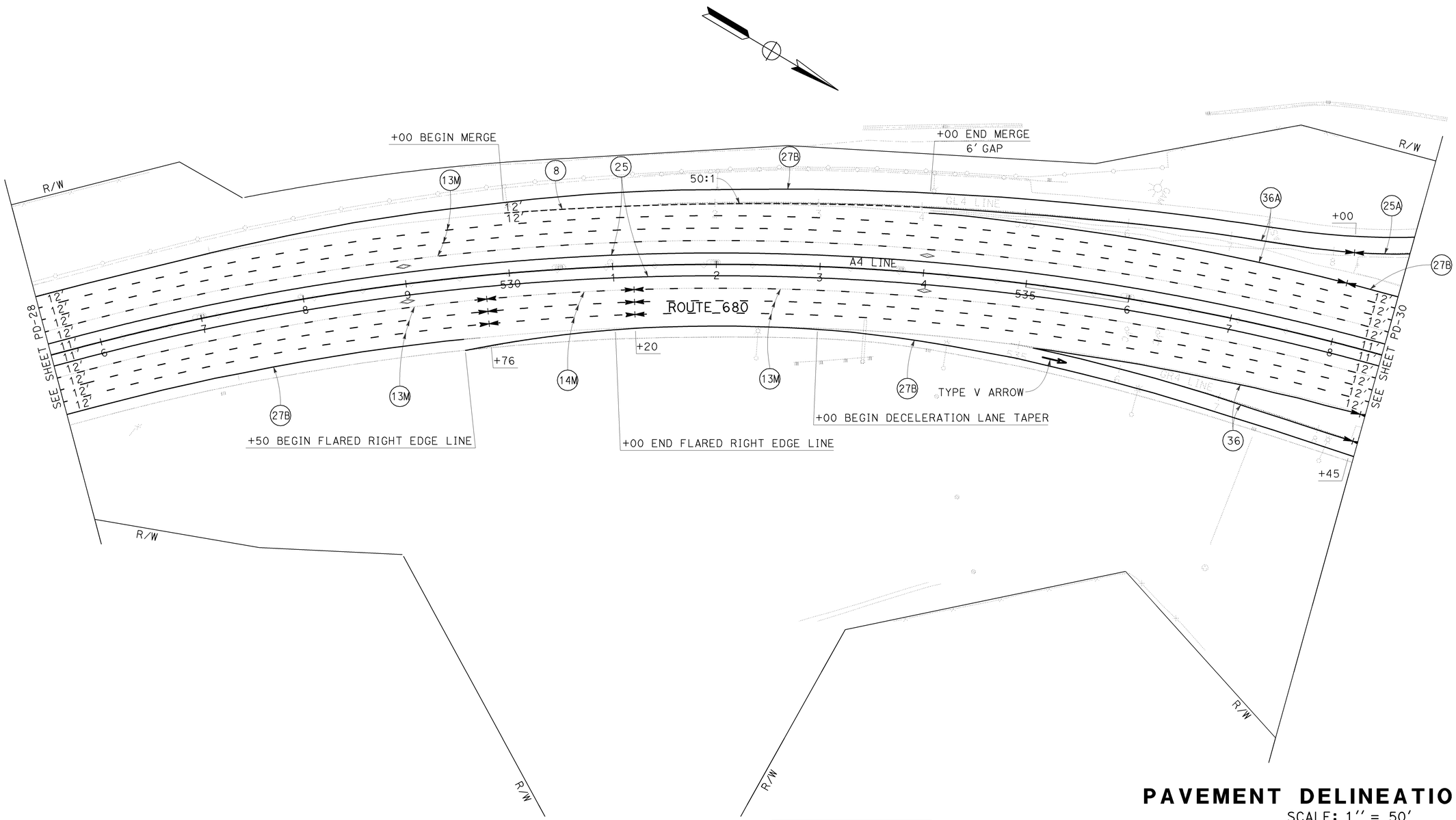

FOR NOTES, ABBREVIATIONS AND LEGEND, SEE SHEET PD-1

THIS PLAN ACCURATE FOR PAVEMENT DELINEATION WORK ONLY

PAVEMENT DELINEATION PLAN

SCALE: 1'' = 50'

PD-29

STATE OF CALIFORNIA - DEPARTMENT OF TRANSPORTATION
DESIGN

FUNCTIONAL SUPERVISOR: ARVIND K. GUPTA
CALCULATED-DESIGNED BY: HOWARD LAI
CHECKED BY: FANNY YEUNG
REVISED BY: RS
DATE REVISED: 7/20/09

LAST REVISION DATE PLOTTED => 04-FEB-2010
TIME PLOTTED => 13:07
07-29-09

Dist	COUNTY	ROUTE	POST MILES TOTAL PROJECT	SHEET No.	TOTAL SHEETS
04	CC	680	0.0/R2.8	309	504

REGISTERED CIVIL ENGINEER 8/7/09 DATE

2-1-10
PLANS APPROVAL DATE

REGISTERED PROFESSIONAL ENGINEER
Z. Mangat
No. 44843
Exp 3-31-10
CIVIL
STATE OF CALIFORNIA

THE STATE OF CALIFORNIA OR ITS OFFICERS OR AGENTS SHALL NOT BE RESPONSIBLE FOR THE ACCURACY OR COMPLETENESS OF SCANNED COPIES OF THIS PLAN SHEET.

FOR ACCURATE RIGHT OF WAY DATA,
CONTACT RIGHT OF WAY ENGINEERING
AT THE DISTRICT OFFICE.

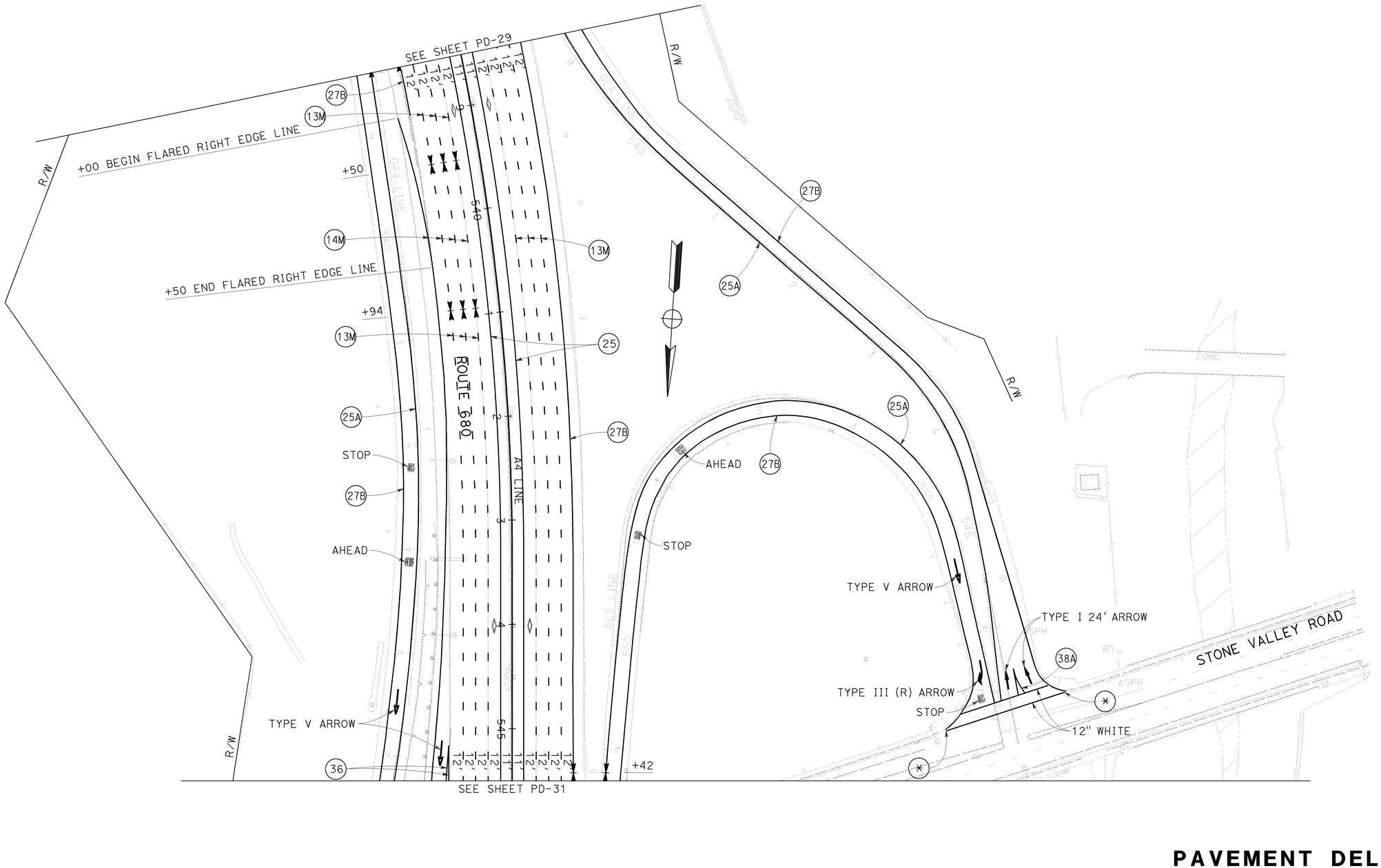

PAVEMENT DELINEATION PLAN

SCALE: 1'' = 50'

FOR NOTES, ABBREVIATIONS AND LEGEND, SEE SHEET PD-1

THIS PLAN ACCURATE FOR PAVEMENT DELINEATION WORK ONLY

PD-30

STATE OF CALIFORNIA - DEPARTMENT OF TRANSPORTATION
Caltrans
DESIGN

FUNCTIONAL SUPERVISOR: ARVIND K. GUPTA
CALCULATED-DESIGNED BY: HOWARD LAI
CHECKED BY: FANNY YEUNG
REVISED BY: RS
DATE REVISED: 7/20/09

LAST REVISION 11-03-09
DATE PLOTTED => 04-FEB-2010
TIME PLOTTED => 13:07

Dist	COUNTY	ROUTE	POST MILES TOTAL PROJECT	SHEET No.	TOTAL SHEETS
04	CC	680	0.0/R2.8	310	504

REGISTERED CIVIL ENGINEER 8/7/09 DATE

2-1-10
PLANS APPROVAL DATE

REGISTERED PROFESSIONAL ENGINEER Z. Mangat No. 44843 Exp 3-31-10 CIVIL STATE OF CALIFORNIA

THE STATE OF CALIFORNIA OR ITS OFFICERS OR AGENTS SHALL NOT BE RESPONSIBLE FOR THE ACCURACY OR COMPLETENESS OF SCANNED COPIES OF THIS PLAN SHEET.

FOR ACCURATE RIGHT OF WAY DATA, CONTACT RIGHT OF WAY ENGINEERING AT THE DISTRICT OFFICE.

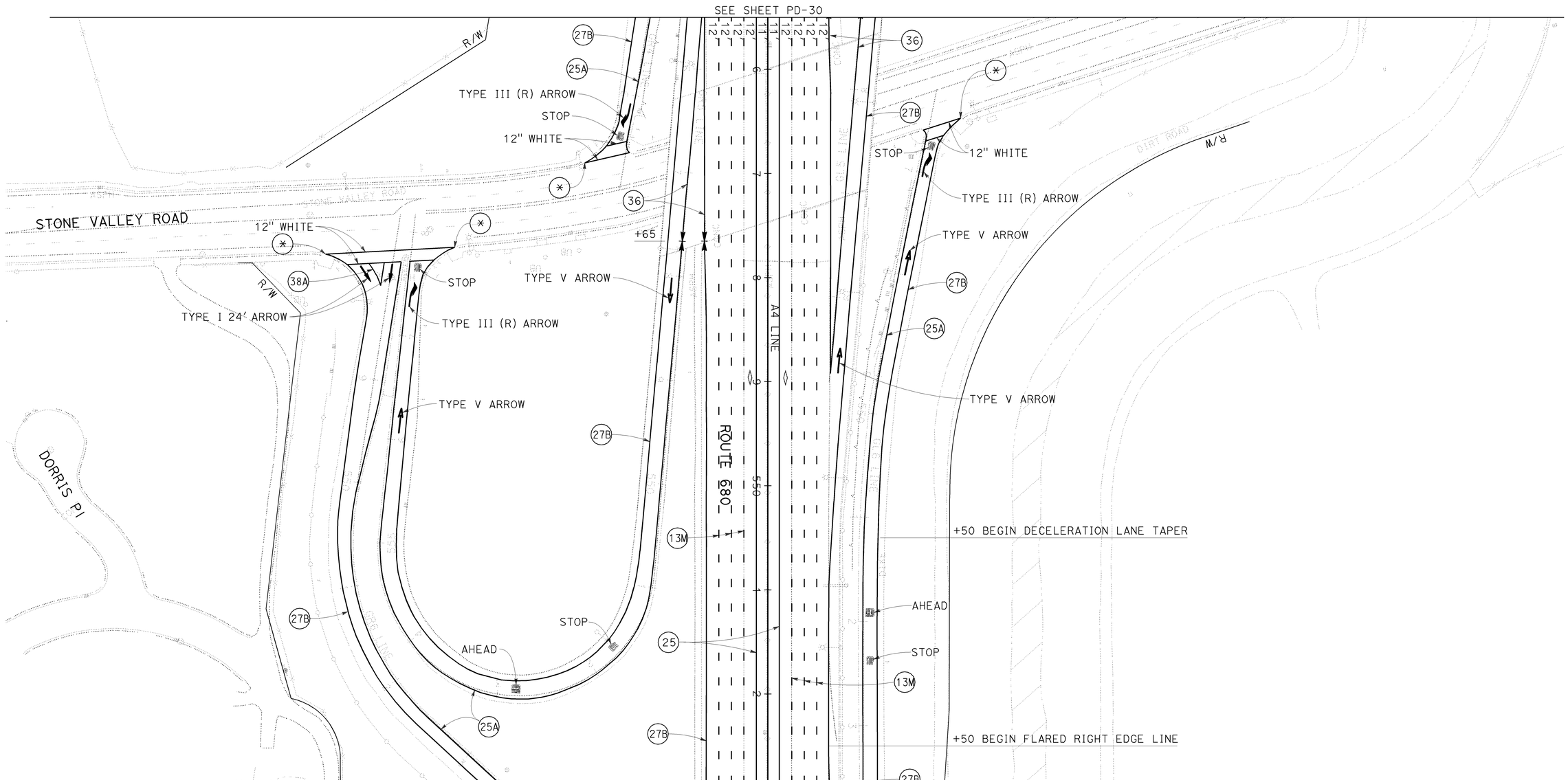

FOR NOTES, ABBREVIATIONS AND LEGEND, SEE SHEET PD-1

THIS PLAN ACCURATE FOR PAVEMENT DELINEATION WORK ONLY

PAVEMENT DELINEATION PLAN

SCALE: 1'' = 50'

PD-31

REVISED BY	DATE REVISED
RS	7/20/09

CALCULATED-DESIGNED BY	CHECKED BY
HOWARD LAI	FANNY YEUNG

FUNCTIONAL SUPERVISOR: ARVIND K. GUPTA

STATE OF CALIFORNIA - DEPARTMENT OF TRANSPORTATION

Caltrans® DESIGN

LAST REVISION 09-28-09 | DATE PLOTTED => 04-FEB-2010 | TIME PLOTTED => 13:07

BORDER LAST REVISED 4/11/2008 | RELATIVE BORDER SCALE IS IN INCHES 0 1 2 3 | USERNAME => trcarol | DGN FILE => 44470una031.dgn | CU 04236 | EA 4470U1

Dist	COUNTY	ROUTE	POST MILES TOTAL PROJECT	SHEET No.	TOTAL SHEETS
04	CC	680	0.0/R2.8	311	504

Zoren S. Mangat 8/7/09
REGISTERED CIVIL ENGINEER DATE

2-1-10
PLANS APPROVAL DATE

REGISTERED PROFESSIONAL ENGINEER
Z. Mangat
No. 44843
Exp 3-31-10
CIVIL
STATE OF CALIFORNIA

THE STATE OF CALIFORNIA OR ITS OFFICERS OR AGENTS SHALL NOT BE RESPONSIBLE FOR THE ACCURACY OR COMPLETENESS OF SCANNED COPIES OF THIS PLAN SHEET.

FOR ACCURATE RIGHT OF WAY DATA,
CONTACT RIGHT OF WAY ENGINEERING
AT THE DISTRICT OFFICE.

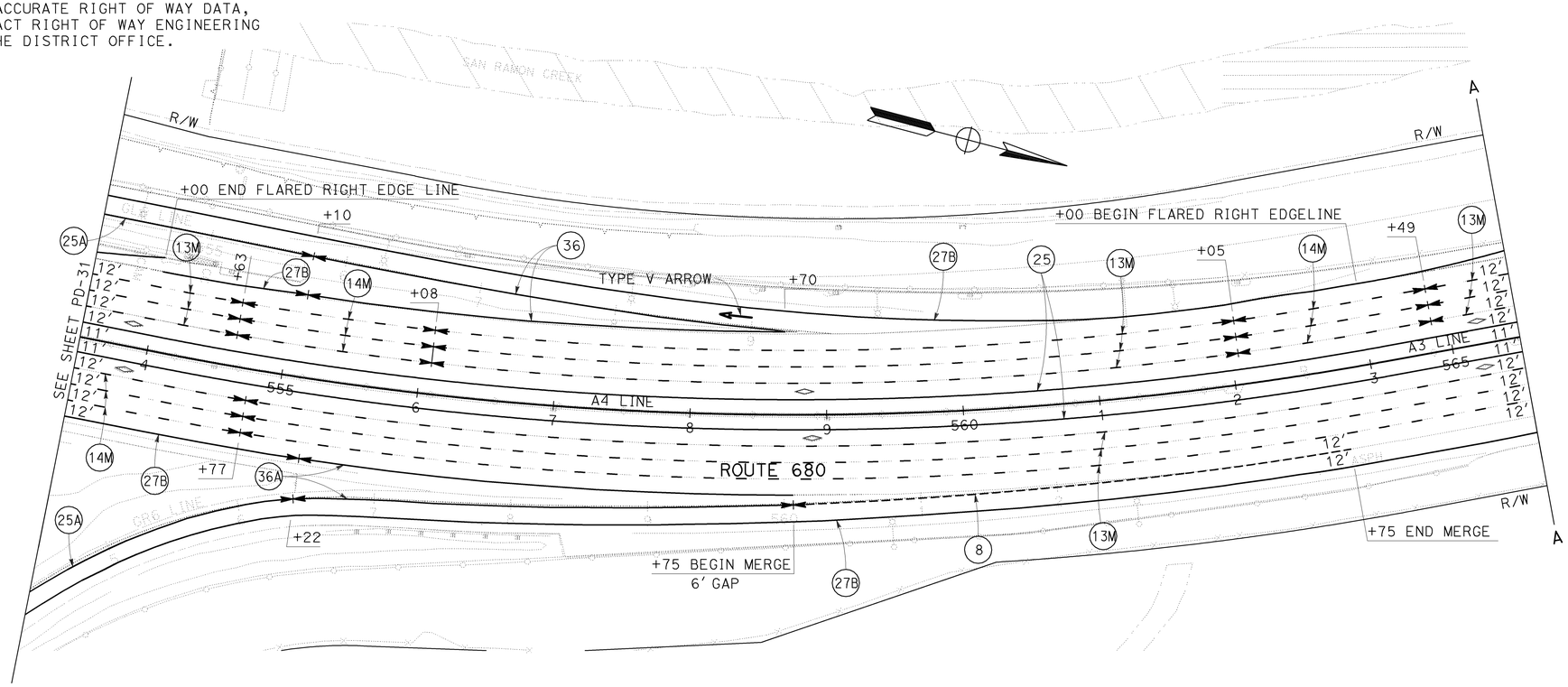

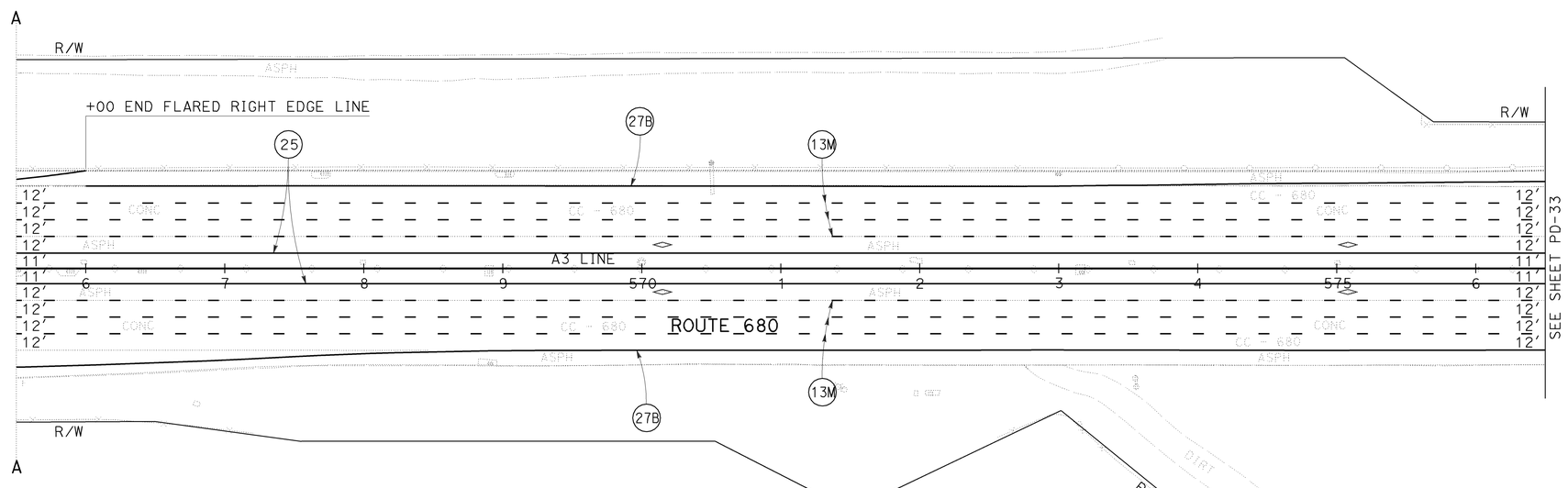

PAVEMENT DELINEATION PLAN

SCALE: 1'' = 50'

FOR NOTES, ABBREVIATIONS AND LEGEND, SEE SHEET PD-1

THIS PLAN ACCURATE FOR PAVEMENT DELINEATION WORK ONLY

PD-32

REVISED BY	DATE REVISED
RS	7/20/09

CALCULATED-DESIGNED BY	CHECKED BY
HOWARD LAI	FANNY YEUNG

FUNCTIONAL SUPERVISOR: ARVIND K. GUPTA

STATE OF CALIFORNIA - DEPARTMENT OF TRANSPORTATION
Caltrans
DESIGN

LAST REVISION 09-29-09 | DATE PLOTTED => 04-FEB-2010 | TIME PLOTTED => 13:07

Dist	COUNTY	ROUTE	POST MILES TOTAL PROJECT	SHEET No.	TOTAL SHEETS
04	CC	680	0.0/R2.8	312	504

REGISTERED CIVIL ENGINEER 8/7/09 DATE

2-1-10
PLANS APPROVAL DATE

REGISTERED PROFESSIONAL ENGINEER Z. Mangat No. 44843 Exp 3-31-10 CIVIL STATE OF CALIFORNIA

THE STATE OF CALIFORNIA OR ITS OFFICERS OR AGENTS SHALL NOT BE RESPONSIBLE FOR THE ACCURACY OR COMPLETENESS OF SCANNED COPIES OF THIS PLAN SHEET.

FOR ACCURATE RIGHT OF WAY DATA,
CONTACT RIGHT OF WAY ENGINEERING
AT THE DISTRICT OFFICE.

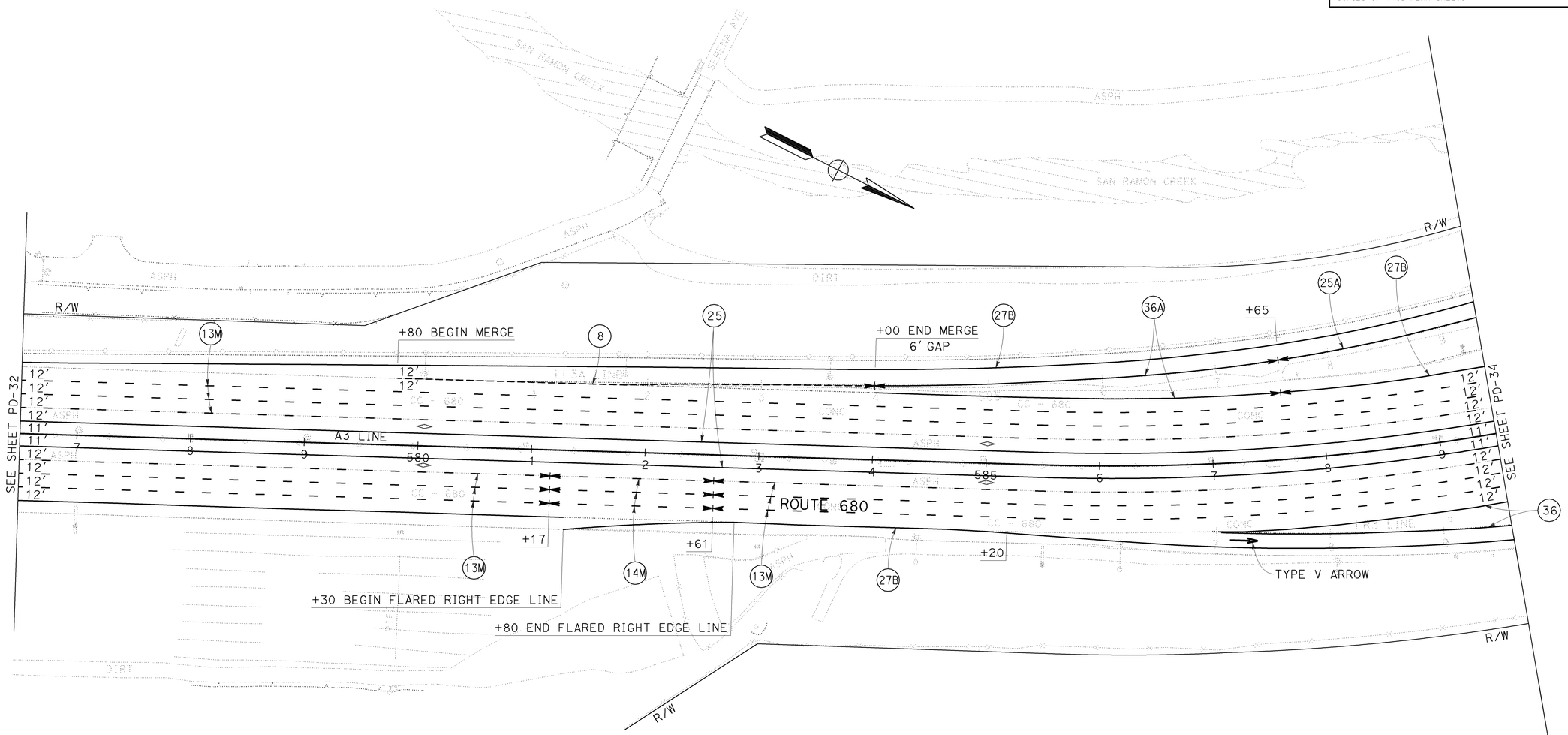

PAVEMENT DELINEATION PLAN

SCALE: 1'' = 50'

FOR NOTES, ABBREVIATIONS AND LEGEND, SEE SHEET PD-1

THIS PLAN ACCURATE FOR PAVEMENT DELINEATION WORK ONLY

PD-33

STATE OF CALIFORNIA - DEPARTMENT OF TRANSPORTATION
Caltrans
DESIGN

FUNCTIONAL SUPERVISOR: ARVIND K. GUPTA
CALCULATED-DESIGNED BY: HOWARD LAI
CHECKED BY: FANNY YEUNG
REVISED BY: RS
DATE REVISED: 7/20/09

LAST REVISION 09-29-09
DATE PLOTTED => 04-FEB-2010
TIME PLOTTED => 13:07

BORDER LAST REVISED 4/11/2008
RELATIVE BORDER SCALE IS IN INCHES 0 1 2 3
USERNAME => trcarol
DGN FILE => 44470una033.dgn
CU 04236
EA 4470U1

Dist	COUNTY	ROUTE	POST MILES TOTAL PROJECT	SHEET No.	TOTAL SHEETS
04	CC	680	0.0/R2.8	313	504

REGISTERED CIVIL ENGINEER 8/7/09 DATE

2-1-10
PLANS APPROVAL DATE

REGISTERED PROFESSIONAL ENGINEER Z. Mangat No. 44843 Exp. 3-31-10 CIVIL STATE OF CALIFORNIA

THE STATE OF CALIFORNIA OR ITS OFFICERS OR AGENTS SHALL NOT BE RESPONSIBLE FOR THE ACCURACY OR COMPLETENESS OF SCANNED COPIES OF THIS PLAN SHEET.

FOR ACCURATE RIGHT OF WAY DATA,
CONTACT RIGHT OF WAY ENGINEERING
AT THE DISTRICT OFFICE.

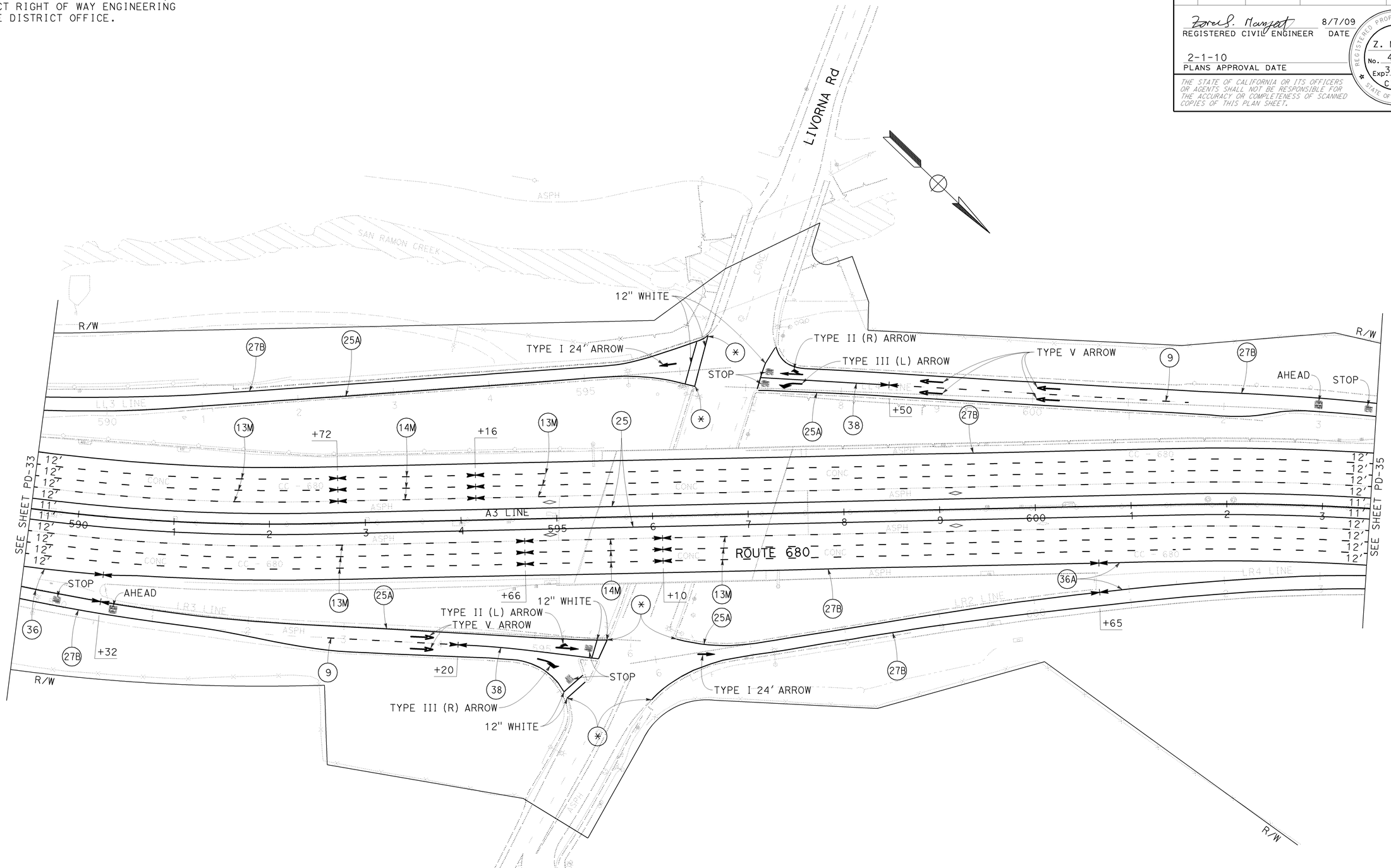

PAVEMENT DELINEATION PLAN

SCALE: 1'' = 50'

FOR NOTES, ABBREVIATIONS AND LEGEND, SEE SHEET PD-1

THIS PLAN ACCURATE FOR PAVEMENT DELINEATION WORK ONLY

PD-34

STATE OF CALIFORNIA - DEPARTMENT OF TRANSPORTATION
Caltrans® DESIGN

FUNCTIONAL SUPERVISOR: ARVIND K. GUPTA

CALCULATED-DESIGNED BY: HOWARD LAI
CHECKED BY: FANNY YEUNG

REVISED BY: RS
DATE REVISED: 7/20/09

LAST REVISION: 11-03-09
DATE PLOTTED => 04-FEB-2010
TIME PLOTTED => 13:07

BORDER LAST REVISED 4/11/2008
RELATIVE BORDER SCALE IS IN INCHES 0 1 2 3
USERNAME => trcarol
DGN FILE => 44470una034.dgn
CU 04236
EA 4470U1

Dist	COUNTY	ROUTE	POST MILES TOTAL PROJECT	SHEET No.	TOTAL SHEETS
04	CC	680	0.0/R2.8	314	504

REGISTERED CIVIL ENGINEER 8/7/09 DATE

2-1-10
PLANS APPROVAL DATE

REGISTERED PROFESSIONAL ENGINEER Z. Mangat No. 44843 Exp 3-31-10 CIVIL STATE OF CALIFORNIA

THE STATE OF CALIFORNIA OR ITS OFFICERS OR AGENTS SHALL NOT BE RESPONSIBLE FOR THE ACCURACY OR COMPLETENESS OF SCANNED COPIES OF THIS PLAN SHEET.

FOR ACCURATE RIGHT OF WAY DATA, CONTACT RIGHT OF WAY ENGINEERING AT THE DISTRICT OFFICE.

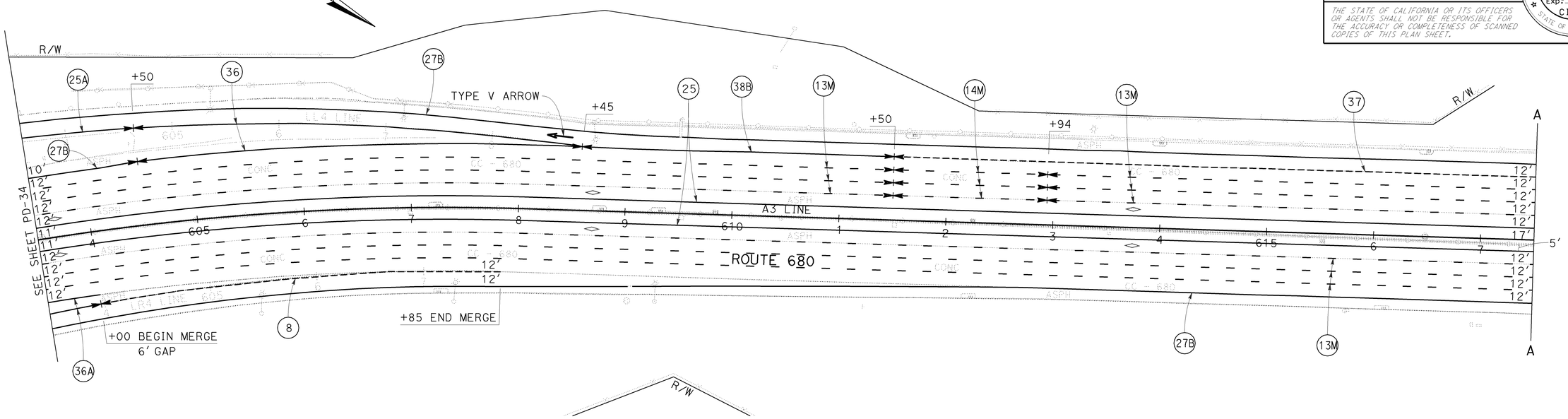

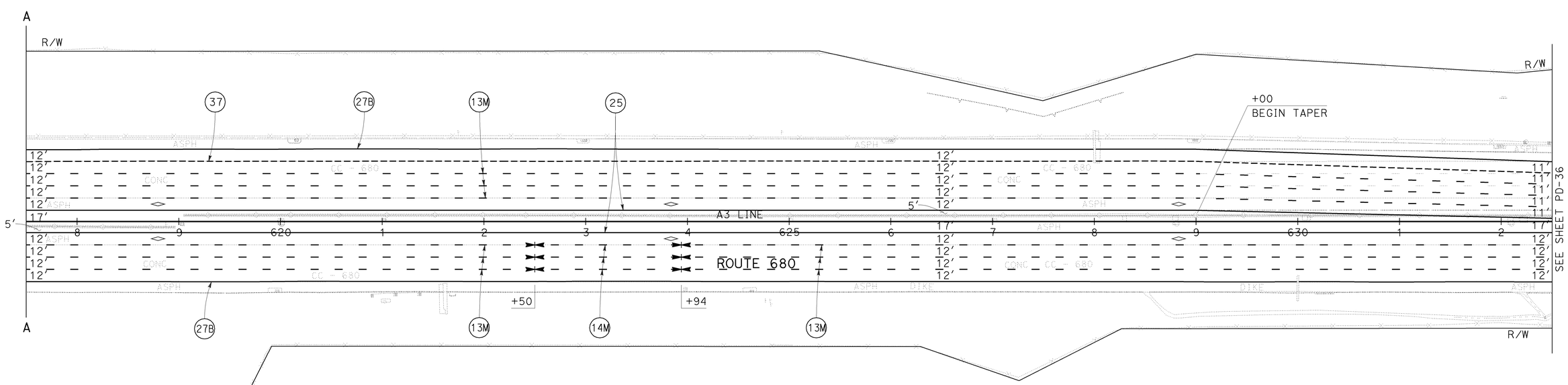

PAVEMENT DELINEATION PLAN

SCALE: 1'' = 50'

FOR NOTES, ABBREVIATIONS AND LEGEND, SEE SHEET PD-1

THIS PLAN ACCURATE FOR PAVEMENT DELINEATION WORK ONLY

PD-35

REVISED BY	RS
DATE REVISED	7/20/09
CALCULATED-DESIGNED BY	HOWARD LAI
CHECKED BY	FANNY YEUNG
FUNCTIONAL SUPERVISOR	ARVIND K. GUPTA

STATE OF CALIFORNIA - DEPARTMENT OF TRANSPORTATION
Caltrans
DESIGN

LAST REVISION 09-29-09
DATE PLOTTED => 04-FEB-2010
TIME PLOTTED => 13:07

Dist	COUNTY	ROUTE	POST MILES TOTAL PROJECT	SHEET No.	TOTAL SHEETS
04	CC	680	0.0/R2.8	315	504

REGISTERED CIVIL ENGINEER 8/7/09 DATE

2-1-10
PLANS APPROVAL DATE

REGISTERED PROFESSIONAL ENGINEER Z. Mangat No. 44843 Exp 3-31-10 CIVIL STATE OF CALIFORNIA

THE STATE OF CALIFORNIA OR ITS OFFICERS OR AGENTS SHALL NOT BE RESPONSIBLE FOR THE ACCURACY OR COMPLETENESS OF SCANNED COPIES OF THIS PLAN SHEET.

FOR ACCURATE RIGHT OF WAY DATA, CONTACT RIGHT OF WAY ENGINEERING AT THE DISTRICT OFFICE.

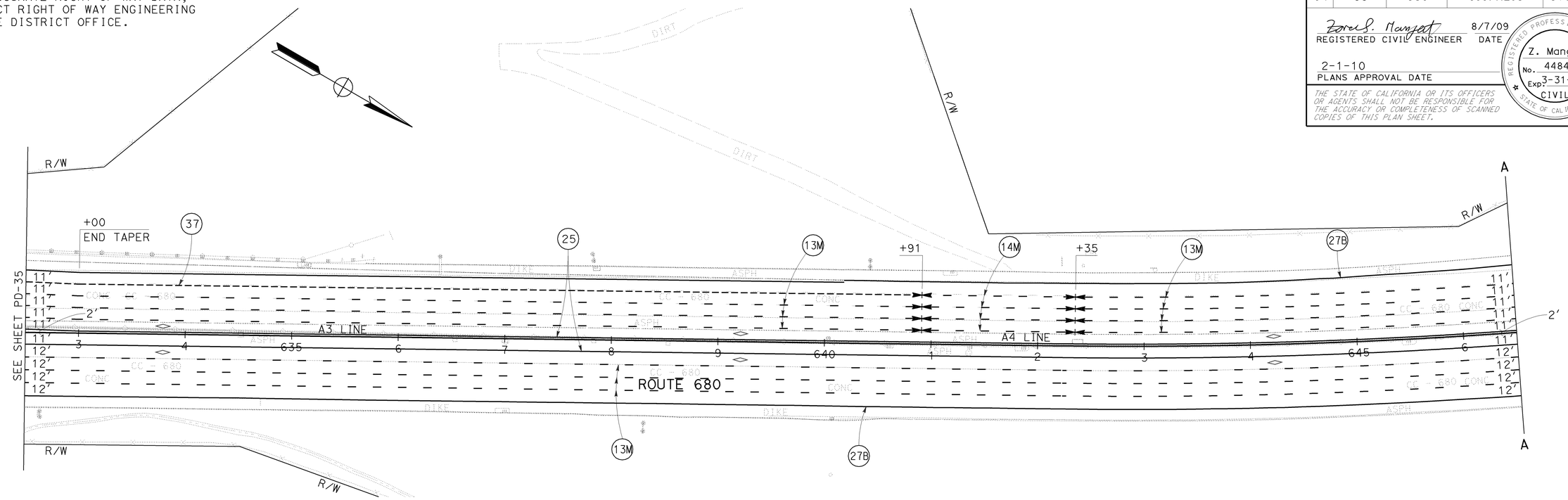

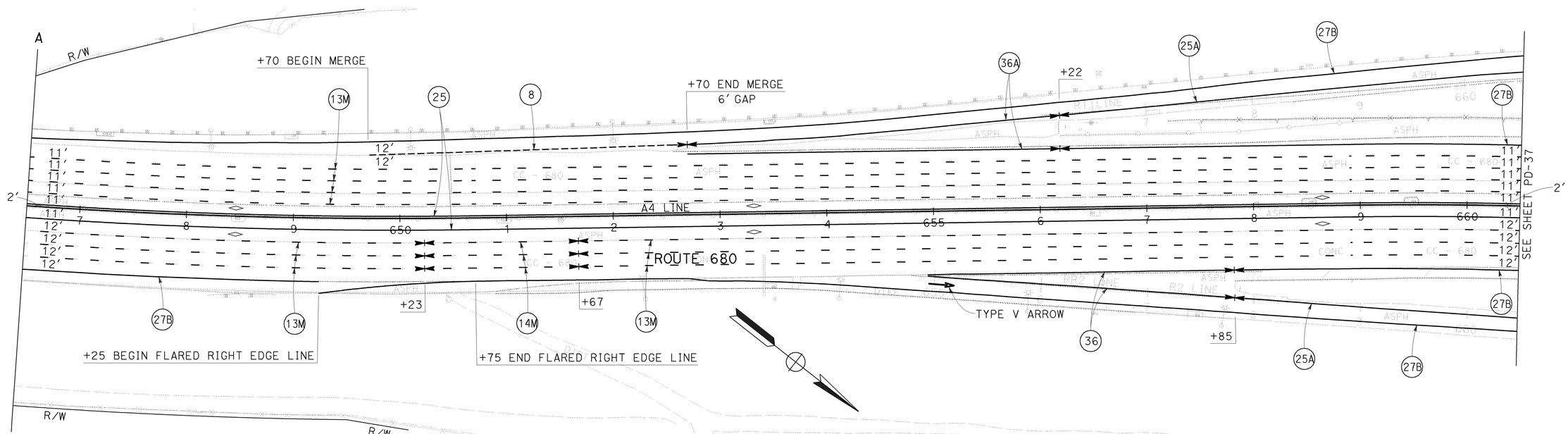

PAVEMENT DELINEATION PLAN

SCALE: 1'' = 50'

FOR NOTES, ABBREVIATIONS AND LEGEND, SEE SHEET PD-1

THIS PLAN ACCURATE FOR PAVEMENT DELINEATION WORK ONLY

PD-36

REVISED BY	DATE REVISED
RS	7/20/09

HOWARD LAI — FANNY YEUNG — CALCULATED-DESIGNED BY — CHECKED BY

FUNCTIONAL SUPERVISOR: ARVIND K. GUPTA

STATE OF CALIFORNIA - DEPARTMENT OF TRANSPORTATION — DESIGN — Caltrans

LAST REVISION 11-03-09 — DATE PLOTTED => 04-FEB-2010 — TIME PLOTTED => 13:07

Dist	COUNTY	ROUTE	POST MILES TOTAL PROJECT	SHEET No.	TOTAL SHEETS
04	CC	680	0.0/R2.8	316	504

REGISTERED CIVIL ENGINEER 8/7/09 DATE

2-1-10
PLANS APPROVAL DATE

REGISTERED PROFESSIONAL ENGINEER Z. Mangat No. 44843 Exp 3-31-10 CIVIL STATE OF CALIFORNIA

THE STATE OF CALIFORNIA OR ITS OFFICERS OR AGENTS SHALL NOT BE RESPONSIBLE FOR THE ACCURACY OR COMPLETENESS OF SCANNED COPIES OF THIS PLAN SHEET.

FOR ACCURATE RIGHT OF WAY DATA,
CONTACT RIGHT OF WAY ENGINEERING
AT THE DISTRICT OFFICE.

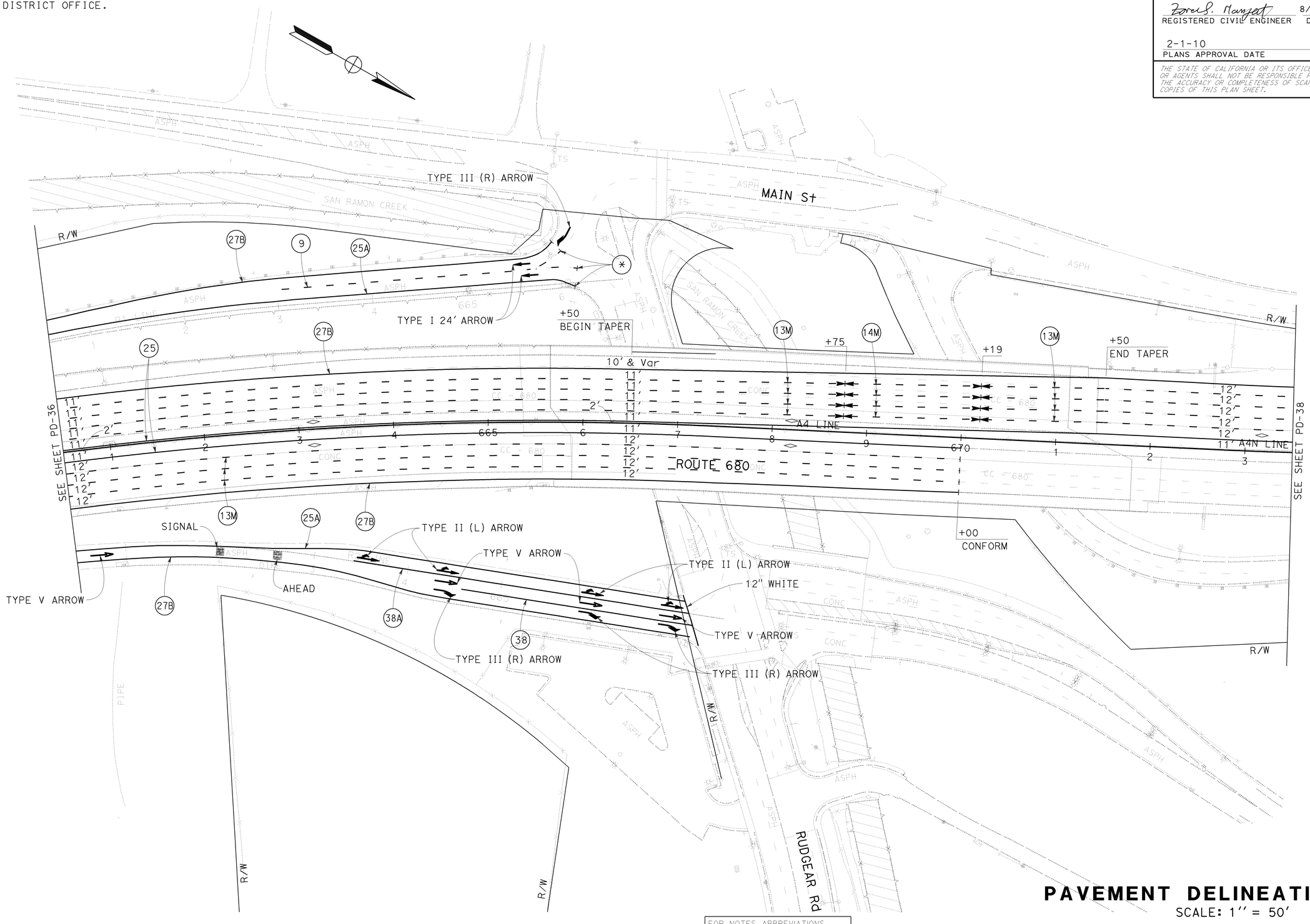

FOR NOTES, ABBREVIATIONS AND LEGEND, SEE SHEET PD-1

THIS PLAN ACCURATE FOR PAVEMENT DELINEATION WORK ONLY

PAVEMENT DELINEATION PLAN

SCALE: 1'' = 50'

PD-37

STATE OF CALIFORNIA - DEPARTMENT OF TRANSPORTATION
Caltrans
DESIGN

FUNCTIONAL SUPERVISOR: ARVIND K. GUPTA
CALCULATED-DESIGNED BY: HOWARD LAI
CHECKED BY: FANNY YEUNG
REVISED BY: RS
DATE REVISED: 7/20/09

LAST REVISION 09-29-09
DATE PLOTTED => 04-FEB-2010
TIME PLOTTED => 13:07

Dist	COUNTY	ROUTE	POST MILES TOTAL PROJECT	SHEET No.	TOTAL SHEETS
04	CC	680	0.0/R2.8	317	504

REGISTERED CIVIL ENGINEER 8/7/09 DATE

2-1-10
PLANS APPROVAL DATE

REGISTERED PROFESSIONAL ENGINEER
Z. Mangat
No. 44843
Exp 3-31-10
CIVIL
STATE OF CALIFORNIA

THE STATE OF CALIFORNIA OR ITS OFFICERS OR AGENTS SHALL NOT BE RESPONSIBLE FOR THE ACCURACY OR COMPLETENESS OF SCANNED COPIES OF THIS PLAN SHEET.

FOR ACCURATE RIGHT OF WAY DATA,
CONTACT RIGHT OF WAY ENGINEERING
AT THE DISTRICT OFFICE.

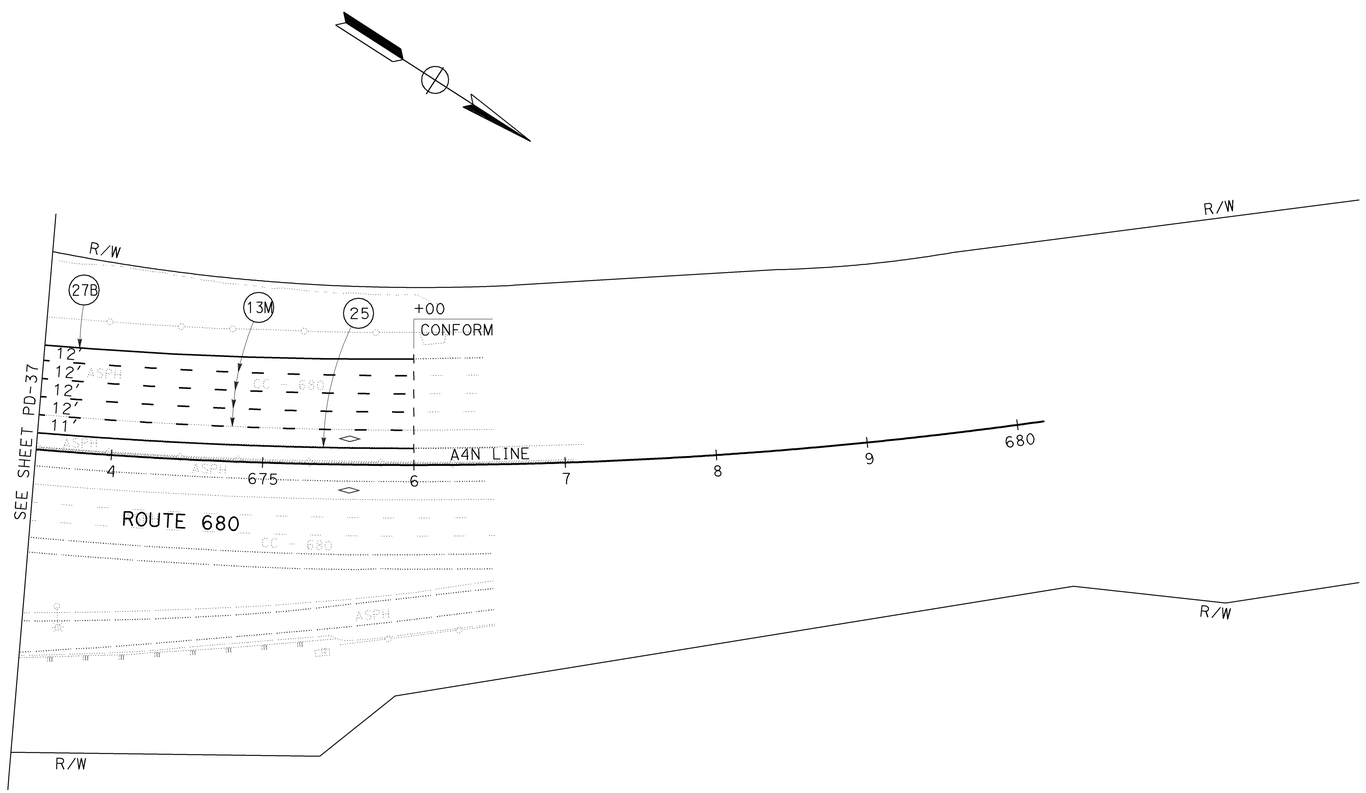

FOR NOTES, ABBREVIATIONS
AND LEGEND, SEE SHEET PD-1

THIS PLAN ACCURATE FOR
PAVEMENT DELINEATION WORK ONLY

PAVEMENT DELINEATION PLAN

SCALE: 1'' = 50'

PD-38

STATE OF CALIFORNIA - DEPARTMENT OF TRANSPORTATION
Caltrans
DESIGN

FUNCTIONAL SUPERVISOR: ARVIND K. GUPTA

CALCULATED-DESIGNED BY: HOWARD LAI
CHECKED BY: FANNY YEUNG

REVISED BY: RS
DATE REVISED: 7/20/09

LAST REVISION 07-29-09 | DATE PLOTTED => 04-FEB-2010 | TIME PLOTTED => 13:08

Dist	COUNTY	ROUTE	POST MILES TOTAL PROJECT	SHEET No.	TOTAL SHEETS
04	CC	680	0.0/R2.8	318	504

Zora S. Mangat 8/7/09
REGISTERED CIVIL ENGINEER DATE

2-1-10
PLANS APPROVAL DATE

REGISTERED PROFESSIONAL ENGINEER
Z. Mangat
No. 44843
Exp 3-31-10
CIVIL
STATE OF CALIFORNIA

THE STATE OF CALIFORNIA OR ITS OFFICERS OR AGENTS SHALL NOT BE RESPONSIBLE FOR THE ACCURACY OR COMPLETENESS OF SCANNED COPIES OF THIS PLAN SHEET.

NOTES:

1. DETAIL 13M AND 14M IS MODIFIED PAVEMENT DELINEATION DETAIL 13 AND 14.
2. FOR DETAILS NOT SHOWN, SEE STANDARD PLAN A20A.
3. INSTALL 4" WHIT AFTER INSTALL PAVEMENT MARKERS.

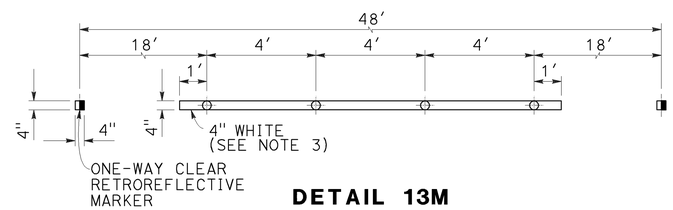

DETAIL 13M

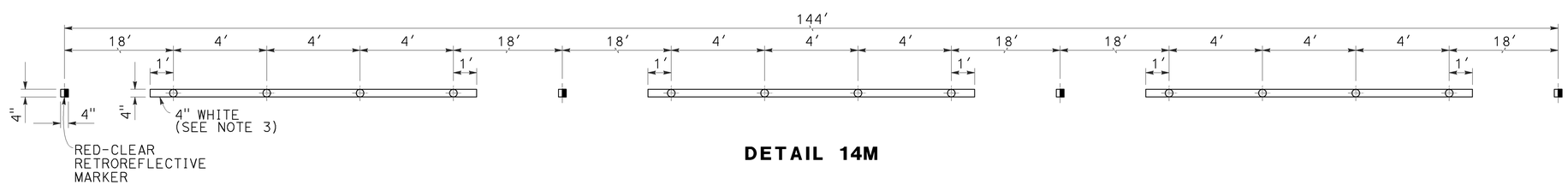

DETAIL 14M

PAVEMENT DELINEATION DETAILS

NO SCALE

PDD-1

STATE OF CALIFORNIA - DEPARTMENT OF TRANSPORTATION
Caltrans
DESIGN

FUNCTIONAL SUPERVISOR: ARVIND K. GUPTA
CALCULATED-DESIGNED BY: PETER LAC
CHECKED BY: ZORA S. MANGAT
REVISED BY: RS
DATE REVISED: 7/20/09

LAST REVISION 04-29-09
DATE PLOTTED => 04-FEB-2010
TIME PLOTTED => 13:08

Dist	COUNTY	ROUTE	POST MILES TOTAL PROJECT	SHEET No.	TOTAL SHEETS
04	CC	680	0.0/R2.8	319	504

Zora S. Mangat 8/7/09
REGISTERED CIVIL ENGINEER DATE

2-1-10
PLANS APPROVAL DATE

REGISTERED PROFESSIONAL ENGINEER Z. Mangat No. 44843 Exp 3-31-10 CIVIL STATE OF CALIFORNIA

THE STATE OF CALIFORNIA OR ITS OFFICERS OR AGENTS SHALL NOT BE RESPONSIBLE FOR THE ACCURACY OR COMPLETENESS OF SCANNED COPIES OF THIS PLAN SHEET.

TRAFFIC STRIPES, PAVEMENT MARKING AND PAVEMENT MARKERS

SHEET No.	STATION	DETAIL No.	THERMOPLASTIC TRAFFIC STRIPE					THERMOPLASTIC PAVEMENT MARKING														PAVEMENT MARKER			
																						NON-REFLECTIVE	REFLECTIVE		
			4" YELLOW	4" WHITE	4" WHITE (BROKEN 17-7)	8" WHITE	8" WHITE (BROKEN 12-3)	12" WHITE	TYPE I 24" ARROW	TYPE II (B)	TYPE II (L)	TYPE II (R)	TYPE III (L)	TYPE III (R)	TYPE III (B)	TYPE V	TYPE VI	STOP	SIGNAL	AHEAD	DIAMOND SYMBOL	TYPE A	TYPE C	TYPE G	TYPE H
			LF					SQFT														EA			
PD-1	B 564+85 TO A 14+50	13M		11400																		879		221	
	B 564+85 TO A 14+50	25	3515																						74
	B 564+85 TO A 14+50	27B		2925																					
	A 14+00 TO 14+50	8			50																				
	A 8+60 TO 14+00	36A		540		540																		24	
	PAVEMENT MARKING																				66				
PD-2	A 14+50 TO 44+50	13M		17568																		1464		367	
	A 27+17 TO 28+61	14M		432																		36	15		
	A 14+50 TO 44+50	25	6000																						126
	A 14+50 TO 44+50	27B		6000																					
	A 14+50 TO 17+00	8			250																				
	A 18+52 TO 22+52	36				800																		34	
	PAVEMENT MARKING															33					132				
PD-3	A 44+50 TO A4 72+50	13M		16368																		1464		342	
	A4 55+01 TO 56+45	14M		432																		36	12		
	A 44+50 TO A4 72+50	25	5600																						118
	A 44+50 TO A4 72+50	27B		5600																					
	PAVEMENT MARKING																				132			358	
PD-4	A4 72+50 TO 102+50	13M		17136																		1428			
	A4 76+16 TO 77+60	14M		432																		36	12		
	A4 82+85 TO 84+29	14M		432																		36	12		
	A4 70+50 TO 102+50	25	6000																						126
	A4 70+50 TO 102+50	27B		6000																					
	PAVEMENT MARKING																				132				
PD-5	A4 102+50 TO 132+50	13M		17370																		1448		363	
	A4 104+00 TO 105+44	14M		432																		36	12		
	A4 131+84 TO 132+50	14M		198																		17	5		
	A4 102+50 TO 132+50	25	6000																						126
	A4 102+50 TO 132+50	27B		6000																					
	A4 124+50 TO 132+50	37					800																	56	
	PAVEMENT MARKING																	132							
PD-6	A4 132+50 TO 147+50	13M		8429																		702		177	
	A4 132+50 TO 132+28	14M		234																		20	6		
	A4 146+37 TO 147+50	14M		339																		28	8		
	A4 132+50 TO 147+50	25	3000																						64
	A4 132+50 TO 132+28	37					78																8	17	
	A4 132+50 TO 147+50	27B		3000																					
	A4 133+28 TO 138+00	38B				472																		22	
SHEET TOTAL			301115	121267	300	1812	878									33			132		462	7630	90	1981	634

NOTE: FOR TOTALS SEE SHEET PDQ-13

PAVEMENT DELINEATION QUANTITIES

PDQ-1

STATE OF CALIFORNIA - DEPARTMENT OF TRANSPORTATION
Caltrans® DESIGN
FUNCTIONAL SUPERVISOR: ARVIND K. GUPTA
CALCULATED-DESIGNED BY: FANNY YEONG
CHECKED BY: ZORA S. MANGAT
REVISED BY: HL
DATE REVISED: 7/20/09

LAST REVISION 11-16-09
DATE PLOTTED => 04-FEB-2010
TIME PLOTTED => 13:08

Dist	COUNTY	ROUTE	POST MILES TOTAL PROJECT	SHEET No.	TOTAL SHEETS
04	CC	680	0.0/R12.8	320	504

Zora S. Mangat 8/7/09
REGISTERED CIVIL ENGINEER DATE

2-1-10
PLANS APPROVAL DATE

REGISTERED PROFESSIONAL ENGINEER Z. Mangat No. 44843 Exp 3-31-10 CIVIL STATE OF CALIFORNIA

THE STATE OF CALIFORNIA OR ITS OFFICERS OR AGENTS SHALL NOT BE RESPONSIBLE FOR THE ACCURACY OR COMPLETENESS OF SCANNED COPIES OF THIS PLAN SHEET.

TRAFFIC STRIPES, PAVEMENT MARKING AND PAVEMENT MARKERS

SHEET No.	STATION	DETAIL No.	THERMOPLASTIC TRAFFIC STRIPE					THERMOPLASTIC PAVEMENT MARKING														PAVEMENT MARKER			
																						NON-REFLECTIVE	REFLECTIVE		
			4'' YELLOW	4'' WHITE	4'' WHITE (BROKEN 17-7)	8'' WHITE	8'' WHITE (BROKEN 12-3)	12'' WHITE	TYPE I 24'' ARROW	TYPE II (B)	TYPE II (L)	TYPE II (R)	TYPE III (L)	TYPE III (R)	TYPE III (B)	TYPE V	TYPE VI	STOP	SIGNAL	AHEAD	DIAMOND SYMBOL	TYPE A	TYPE C	TYPE G	TYPE H
			LF					SQFT														EA			
PD-6	BR1 138+00 TO 141+88	36B		388		387																		17	
	BR1 141+87 TO 148+00	25A	613																						27
	BR1 141+87 TO 148+00	27B		613																					27
	BR1 146+20 TO 148+00	38A				360																			
	BR1 138+00 TO 148+20	9			820																			18	
	BL1 141+20 TO 144+42	36A		322		322																		14	
	BL1 144+42 TO 147+50	25A	308																						14
	BL1 137+20 TO 141+20	8			400																				
	BL1 144+42 TO 147+50	27B		308																					14
	PAVEMENT MARKING												42	84		132			64	62	66				
PD-7	A4 147+50 TO 156+50	13M		5307																		442		112	
	A4 147+50 TO 147+81	14M		93																		8	3		
	A4 147+50 TO 156+50	25	1800																						39
	A4 147+50 TO 156+50	27B		1800																					
	A4 149+30 TO 151+25	36A		195		195																		9	
	A4 153+00 TO 155+00	36A		200		200																		9	
	A4 151+25 TO 155+25	8			400																				
	BR2 151+00 TO 157+30	25A	630																						27
	BR2 151+30 TO 157+30	27B		630																					
	BR1 148+00 TO 151+50	38A				700																			
	BR1 148+00 TO 151+50	25A	350																						16
	BR1 148+00 TO 151+51	27B		350																					
	BR3 151+80 TO 158+00	25A	620																						27
	BR3 151+80 TO 158+00	27B		620																					
	BR3 151+80 TO 158+35	38A				155																			
	BR3 153+00 TO 158+00	9			465																			11	
	BL1 147+50 TO 153+50	25A	600																						26
	BL1 147+50 TO 153+50	27B		600																					
	BL2 155+10 TO 161+00	25A	590																						26
	BL2 149+50 TO 161+01	27B		590																					
	BL3 154+30 TO 156+80	9			420																			13	
	BL3 153+28 TO 156+80	25A	352																						16
	BL3 153+28 TO 156+80	27B		352																					
	BL3 153+28 TO 154+30	38A				204																			
	BL3 153+28 TO 156+80	38				352																		16	
	PAVEMENT MARKING							180	124		90		168	336			84				44				
	SHEET TOTAL		5863	12368	2505	2875		180	124		90		210	420		132	84		64	62	110	450	3	219	259

NOTE: FOR TOTALS SEE SHEET PDQ-13

PAVEMENT DELINEATION QUANTITIES

PDQ-2

STATE OF CALIFORNIA - DEPARTMENT OF TRANSPORTATION
Caltrans DESIGN

FUNCTIONAL SUPERVISOR: ARVIND K. GUPTA
CALCULATED-DESIGNED BY: FANNY YEONG
CHECKED BY: ZORA S. MANGAT
REVISED BY: HL
DATE REVISED: 7/20/09

LAST REVISION 11-02-09
DATE PLOTTED => 04-FEB-2010
TIME PLOTTED => 13:09

Dist	COUNTY	ROUTE	POST MILES TOTAL PROJECT	SHEET No.	TOTAL SHEETS
04	CC	680	0.0/R12.8	321	504

Zora S. Mangat 8/7/09
REGISTERED CIVIL ENGINEER DATE

2-1-10
PLANS APPROVAL DATE

REGISTERED PROFESSIONAL ENGINEER
Z. Mangat
No. 44843
Exp 3-31-10
CIVIL
STATE OF CALIFORNIA

THE STATE OF CALIFORNIA OR ITS OFFICERS OR AGENTS SHALL NOT BE RESPONSIBLE FOR THE ACCURACY OR COMPLETENESS OF SCANNED COPIES OF THIS PLAN SHEET.

TRAFFIC STRIPES, PAVEMENT MARKING AND PAVEMENT MARKERS

SHEET No.	STATION	DETAIL No.	THERMOPLASTIC TRAFFIC STRIPE					THERMOPLASTIC PAVEMENT MARKING														PAVEMENT MARKER			
																						NON-REFLECTIVE	REFLECTIVE		
			4'' YELLOW	4'' WHITE	4'' WHITE (BROKEN 17-7)	8'' WHITE	8'' WHITE (BROKEN 12-3)	12'' WHITE	TYPE I 24'' ARROW	TYPE II (B)	TYPE II (L)	TYPE II (R)	TYPE III (L)	TYPE III (R)	TYPE III (B)	TYPE V	TYPE VI	STOP	SIGNAL	AHEAD	DIAMOND SYMBOL	TYPE A	TYPE C	TYPE G	TYPE H
			LF					SQFT														EA			
	A4 156+50 TO 171+50	13M		8799																		733		184	
	A4 170+83 TO 171+50	14M		201																		17	5		
	A4 156+50 TO 171+51	25	3000																						64
	A4 156+50 TO 171+52	27B		3000																					
	A4 168+50 TO 171+50	37					467																8	16	
	A4 165+41 TO 167+50	38A				209																			
	A4 166+00 TO 170+83	38B				483																			
	BR3 158+00 TO 161+20	25A	320																						14
PD-8	BR3 158+00 TO 161+21	27B		320																					
	BR3 158+00 TO 161+50	9			250																				
	A4 159+20 TO 165+41	36B		621		621																		27	
	BL3 156+79 TO 167+00	9			1021																			22	
	BL3 156+79 TO 164+00	25A	721																						31
	BL3 156+79 TO 164+01	27B		721																					
	A4 163+20 TO 166+00	36				560																		24	
	BL3 156+79 TO 158+25	38				146																		7	
	PAVEMENT MARKING										45		84	42		66	42		64	62	66				
	A4 171+50 TO 200+50	13M		16305																		1359		341	
	A4 171+50 TO 172+27	14M		231																		19	8		
	A4 174+21 TO 175+65	14M		432																		36	12		
	A4 198+67 TO 200+11	14M		432																		36	12		
PD-9	A4 171+50 TO 200+50	25	5800																			36	12		122
	A4 171+50 TO 200+51	27B		5800																					
	A4 171+50 TO 200+50	37					5761																8	381	
	PAVEMENT MARKING																				110				
	A4 200+50 TO 215+50	13M		8568																		714		180	
	A4 202+05 TO 203+49	14M		432																		36	12		
	A4 200+50 TO 215+50	25	3000																						64
	A4 200+50 TO 215+50	27B		3000																					
	A4 200+50 TO 203+49	37					299																8	16	
	A4 200+50 TO 202+75	38A				225																			
PD-10	A4 303+49 TO 208+00	38B				451																		40	
	A4 215+00 TO 215+50	36A		50		50																		3	
	A4 211+00 TO 215+00	8			400																				
	CR1A 208+00 TO 210+80	36				560																		24	
	CR1A 210+80 TO 216+00	25A	520																						23
	CR1A 208+05 TO 215+60	9			755																				
	SHEET TOTAL		13361	48912	2426	3305	6527				45		84	42		66	42		64	62	176	2986	85	1265	318

NOTE: FOR TOTALS SEE SHEET PDQ-13

PAVEMENT DELINEATION QUANTITIES

PDQ-3

STATE OF CALIFORNIA - DEPARTMENT OF TRANSPORTATION
Caltrans® DESIGN

FUNCTIONAL SUPERVISOR: ARVIND K. GUPTA
CALCULATED-DESIGNED BY: FANNY YEONG
CHECKED BY: ZORA S. MANGAT
REVISED BY: HL
DATE REVISED: 7/20/09

LAST REVISION 11-02-09
DATE PLOTTED => 04-FEB-2010
TIME PLOTTED => 13:10

Dist	COUNTY	ROUTE	POST MILES TOTAL PROJECT	SHEET No.	TOTAL SHEETS
04	CC	680	0.0/R12.8	322	504

Zora S. Mangat 8/7/09
REGISTERED CIVIL ENGINEER DATE

2-1-10
PLANS APPROVAL DATE

REGISTERED PROFESSIONAL ENGINEER
Z. Mangat
No. 44843
Exp 3-31-10
CIVIL
STATE OF CALIFORNIA

THE STATE OF CALIFORNIA OR ITS OFFICERS OR AGENTS SHALL NOT BE RESPONSIBLE FOR THE ACCURACY OR COMPLETENESS OF SCANNED COPIES OF THIS PLAN SHEET.

TRAFFIC STRIPES, PAVEMENT MARKING AND PAVEMENT MARKERS

SHEET No.	STATION	DETAIL No.	THERMOPLASTIC TRAFFIC STRIPE					THERMOPLASTIC PAVEMENT MARKING														PAVEMENT MARKER			
																						NON-REFLECTIVE	REFLECTIVE		
			4'' YELLOW	4'' WHITE	4'' WHITE (BROKEN 17-7)	8'' WHITE	8'' WHITE (BROKEN 12-3)	12'' WHITE	TYPE I 24'' ARROW	TYPE II (B)	TYPE II (L)	TYPE II (R)	TYPE III (L)	TYPE III (R)	TYPE III (B)	TYPE V	TYPE VI	STOP	SIGNAL	AHEAD	DIAMOND SYMBOL	TYPE A	TYPE C	TYPE G	TYPE H
			LF					SQFT														EA			
PD-10	CR1A 215+50 TO 216+00	38A				80																			
	CL2A 202+75 TO 207+50	36B		475		475																		21	
	CL2A 207+68 TO 216+00	25A	850																						36
	PAVEMENT MARKING												42	42	73	132			64	62	66				
PD-11	A4 215+50 TO 224+50	13M		5400																		450		114	
	A4 215+50 TO 224+50	25	1800																						39
	A4 215+50 TO 224+50	27B		1800																					
	CR1A 215+80 TO 221+35	27B		555																					
	CR1A 216+00 TO 221+30	25A	530																						23
	CR1A 216+00 TO 221+30	38A				1060																		45	
	GR2A 223+00 TO 227+00	25A	400																						18
	GR2A 223+00 TO 227+00	27B		400																					
	GR2A 223+00 TO 227+00	9			400																				
	A4 221+93 TO 224+50	36A		257		257																		12	
	CL2M 216+00 TO 221+20	25A	520																						23
	CL2M 216+00 TO 221+20	27B		520																					
	CL1A 220+04 TO 224+80	25A	476																						21
	CL1A 220+04 TO 224+80	27B		476																					
	CL1A 220+04 TO 224+81	38A				955																			
	CL1A 221+55 TO 224+80	9			325																				
	CL3M 218+65 TO 221+00	25A	235																						11
	CL3M 218+65 TO 221+00	27B		235																					
	CL3A 215+50 TO 218+65	36A		315		315																		14	
	PAVEMENT MARKING							32	48				252	252	146		84				44				
PD-12	A4 224+50 TO 239+50	13M		8136																		678		171	
	A4 226+51 TO 227+95	14M		432																		36	12		
	A4 238+02 TO 239+50	14M		432																		36	12		
	A4 224+50 TO 239+50	25	3000																						64
	A4 224+50 TO 239+50	27B		3000																					
	A4 224+50 TO 224+65	36A		15		15																		2	
	A4 238+02 TO 239+50	37					148																8	6	
	A4 233+47 TO 238+02	38B				455																		40	
	A4 224+65 TO 228+65	8			400																				
	A4 235+20 TO 239+00	8			380																				
	CR2A 227+00 TO 236+39	25A	939																						40
	CR2A 227+00 TO 241+00	27B		900																					
	CR2A 227+00 TO 228+00	9			100																				
	SHEET TOTAL		8750	23348	1605	3612	148	32	48				294	294	219	132	84		64	62	110	1200	32	425	275

NOTE: FOR TOTALS SEE SHEET PDQ-13

PAVEMENT DELINEATION QUANTITIES

PDQ-4

STATE OF CALIFORNIA - DEPARTMENT OF TRANSPORTATION
Caltrans®
DESIGN

FUNCTIONAL SUPERVISOR: ARVIND K. GUPTA
CALCULATED-DESIGNED BY: FANNY YEONG
CHECKED BY: ZORA S. MANGAT
REVISED BY: HL
DATE REVISED: 7/20/09

LAST REVISION: 11-02-09
DATE PLOTTED =>
TIME PLOTTED => 13:10

Dist	COUNTY	ROUTE	POST MILES TOTAL PROJECT	SHEET No.	TOTAL SHEETS
04	CC	680	0.0/R12.8	323	504

Zora S. Mangat 8/7/09
REGISTERED CIVIL ENGINEER DATE

2-1-10
PLANS APPROVAL DATE

REGISTERED PROFESSIONAL ENGINEER
Z. Mangat
No. 44843
Exp 3-31-10
CIVIL
STATE OF CALIFORNIA

THE STATE OF CALIFORNIA OR ITS OFFICERS OR AGENTS SHALL NOT BE RESPONSIBLE FOR THE ACCURACY OR COMPLETENESS OF SCANNED COPIES OF THIS PLAN SHEET.

TRAFFIC STRIPES, PAVEMENT MARKING AND PAVEMENT MARKERS

SHEET No.	STATION	DETAIL No.	THERMOPLASTIC TRAFFIC STRIPE					THERMOPLASTIC PAVEMENT MARKING														PAVEMENT MARKER			
																						NON-REFLECTIVE	REFLECTIVE		
			4'' YELLOW	4'' WHITE	4'' WHITE (BROKEN 17-7)	8'' WHITE	8'' WHITE (BROKEN 12-3)	12'' WHITE	TYPE I 24'' ARROW	TYPE II (B)	TYPE II (L)	TYPE II (R)	TYPE III (L)	TYPE III (R)	TYPE III (B)	TYPE V	TYPE VI	STOP	SIGNAL	AHEAD	DIAMOND SYMBOL	TYPE A	TYPE C	TYPE G	TYPE H
			LF					SQFT														EA			
PD-12	A4 233+00 TO 235+20	36A		220		220																		8	
	CL1A 224+50 TO 234+38	25A	710																						31
	CL1A 224+50 TO 234+38	27B		695																					
	CL1A 224+50 TO 227+44	9			250																				
	CL1A 224+50 TO 227+44	38B				380																		34	
	CL1A 227+44 TO 234+38	9			694																				
	CL1A 231+75 TO 234+47	36				544																		21	
	PAVEMENT MARKING													126	84		42				66				
PD-13	A4 239+50 TO 267+50	13M		16368																		1364		342	
	A4 265+86 TO 267+30	14M		432																		36	12		
	A4 239+50 TO 267+50	25	5600																						118
	A4 239+50 TO 267+50	27B		5600																					
	A4 239+50 TO 248+13	37					863																	54	
	PAVEMENT MARKING																				121				
PD-14	A4 267+50 TO 296+50	13M		16536																		1378		346	
	A4 277+85 TO 279+29	14M		432																		36	12		
	A4 293+70 TO 295+14	14M		432																		36	12		
	A4 267+50 TO 296+50	25	5800																						122
	A4 267+50 TO 296+50	27B		5800																					
	PAVEMENT MARKING																				132				
PD-15	A4 296+50 TO 234+50	13M		16251																		1354		340	
	A4 305+69 TO 307+13	14M		432																		36	12		
	A4 324+11 TO 324+50	14M		117																		10	5		
	A4 296+50 TO 324+50	25	5600																						118
	A4 296+50 TO 324+50	27B		5600																					
	PAVEMENT MARKING																				110				
PD-16	A4 234 +50 TO 338+50	13M		7653																		638		160	
	A4 234 +50 TO 325+55	14M		315																		26	10		
	A4 333+53 TO 334+97	14M		432																		36	12		
	A4 234 +50 TO 338+50	25	2800																						59
	A4 234 +50 TO 338+50	27B		2800																					
	PAVEMENT MARKING																				66				
SHEET TOTAL			20510	80115	944	1144	863							126	84		42				495	4950	75	1305	448

NOTE: FOR TOTALS SEE SHEET PDQ-13

PAVEMENT DELINEATION QUANTITIES

PDQ-5

STATE OF CALIFORNIA - DEPARTMENT OF TRANSPORTATION
Caltrans® DESIGN

FUNCTIONAL SUPERVISOR: ARVIND K. GUPTA
CALCULATED-DESIGNED BY: ZORA S. MANGAT
CHECKED BY: FANNY YEONG
REVISED BY: HL
DATE REVISED: 7/20/09

LAST REVISION 11-02-09
DATE PLOTTED => 04-FEB-2010
TIME PLOTTED => 13:10

Dist	COUNTY	ROUTE	POST MILES TOTAL PROJECT	SHEET No.	TOTAL SHEETS
04	CC	680	0.0/R12.8	324	504

Zora S. Mangat 8/7/09
REGISTERED CIVIL ENGINEER DATE

2-1-10
PLANS APPROVAL DATE

REGISTERED PROFESSIONAL ENGINEER
Z. Mangat
No. 44843
Exp 3-31-10
CIVIL
STATE OF CALIFORNIA

THE STATE OF CALIFORNIA OR ITS OFFICERS OR AGENTS SHALL NOT BE RESPONSIBLE FOR THE ACCURACY OR COMPLETENESS OF SCANNED COPIES OF THIS PLAN SHEET.

TRAFFIC STRIPES, PAVEMENT MARKING AND PAVEMENT MARKERS

SHEET No.	STATION	DETAIL No.	THERMOPLASTIC TRAFFIC STRIPE					THERMOPLASTIC PAVEMENT MARKING														PAVEMENT MARKER			
																						NON-REFLECTIVE	REFLECTIVE		
			4'' YELLOW	4'' WHITE	4'' WHITE (BROKEN 17-7)	8'' WHITE	8'' WHITE (BROKEN 12-3)	12'' WHITE	TYPE I 24'' ARROW	TYPE II (B)	TYPE II (L)	TYPE II (R)	TYPE III (L)	TYPE III (R)	TYPE III (B)	TYPE V	TYPE VI	STOP	SIGNAL	AHEAD	DIAMOND SYMBOL	TYPE A	TYPE C	TYPE G	TYPE H
			LF					SQFT														EA			
PD-17	A4 338+50 TO 350+50	13M		7200																		600		151	
	A4 338+50 TO 350+50	25	2400																						51
	A4 338+50 TO 350+50	27B		2400																					
	A4 339+40 TO 343+50	36				820																		66	
	VR6B 345+35 TO 350+50	9			760																				
	VR6B 347+20 TO 350+50	27B		330																					
	VR6B 349+50 TO 350+50	38				100																		4	
	VR6B 347+20 TO 350+50	25A	330																						15
	VR6B 347+00 TO 349+75	36A		275		275																		9	
	A3 341+50 TO 347+00	8			450																				
	VL6 349+75 TO 350+50	27B		75																					
	VL6 349+75 TO 350+50	25A	75																						4
	PAVEMENT MARKING										90		84	126		99			64	62	66				
PD-18	A4 350+50 TO 359+50	13M		4968																		414		105	
	A4 351+86 TO 353+33	14M		432																		36	12		
	A4 350+50 TO 359+50	25	1800																						39
	A4 350+50 TO 359+50	27B		1800																					
	VR6B 350+50 TO 352+30	9			360																				
	VR6B 352+30 TO 354+30	38A				400																			
	VR6B 350+50 TO 354+30	38				380																		34	
	VR6B 350+50 TO 354+30	25A	380																						17
	VR6B 350+50 TO 354+30	27B		380																					
	VR4 355+70 TO 358+40	9			290																				
	VR4 355+70 TO 359+50	27B		380																					
	VR4 355+70 TO 359+50	25A	380																						17
	VL6 352+20 TO 357+60	9			540																				
	VL6 50+60 TO VL1 357+50	25A	710																						30
	VL6 50+60 TO VL1 357+50	27B		710																					
	VL1 356+40 TO 357+80	35A				105																			
	VL2 355+86 TO 368+50	25A	1264																						54
	VL2 355+86 TO 368+50	27B		1264																					
	VL5A 357+70 TO 358+75	38A				105																			
	VL5A 357+84 TO 360+86	27B		302																					
	VL5A 357+84 TO 360+86	25A	302																						14
	PAVEMENT MARKING							60	155		90		84	168		99	126				33				
SHEET TOTAL			7641	20516	2400	2185		60	155		180		168	294		198	126		64	62	99	1050	12	369	241

NOTE: FOR TOTALS SEE SHEET PDQ-13

PAVEMENT DELINEATION QUANTITIES

PDQ-6

STATE OF CALIFORNIA - DEPARTMENT OF TRANSPORTATION
DESIGN
FUNCTIONAL SUPERVISOR: ARVIND K. GUPTA
CALCULATED-DESIGNED BY: FANNY YEONG
CHECKED BY: ZORA S. MANGAT
REVISED BY: HL
DATE REVISED: 7/20/09

LAST REVISION 11-02-09
DATE PLOTTED => 04-FEB-2010
TIME PLOTTED => 13:10

Dist	COUNTY	ROUTE	POST MILES TOTAL PROJECT	SHEET No.	TOTAL SHEETS
04	CC	680	0.0/R12.8	325	504

Zora S. Mangat 8/7/09
REGISTERED CIVIL ENGINEER DATE

2-1-10
PLANS APPROVAL DATE

REGISTERED PROFESSIONAL ENGINEER Z. Mangat No. 44843 Exp 3-31-10 CIVIL STATE OF CALIFORNIA

THE STATE OF CALIFORNIA OR ITS OFFICERS OR AGENTS SHALL NOT BE RESPONSIBLE FOR THE ACCURACY OR COMPLETENESS OF SCANNED COPIES OF THIS PLAN SHEET.

TRAFFIC STRIPES, PAVEMENT MARKING AND PAVEMENT MARKERS

SHEET No.	STATION	DETAIL No.	THERMOPLASTIC TRAFFIC STRIPE					THERMOPLASTIC PAVEMENT MARKING													PAVEMENT MARKER			
																					NON-REFLECTIVE	REFLECTIVE		
			4'' YELLOW	4'' WHITE	4'' WHITE (BROKEN 17-7)	8'' WHITE	8'' WHITE (BROKEN 12-3)	12'' WHITE	TYPE I 24'' ARROW	TYPE II (B)	TYPE II (L)	TYPE II (R)	TYPE III (L)	TYPE III (R)	TYPE III (B)	TYPE V	TYPE VI	STOP	SIGNAL	AHEAD	DIAMOND SYMBOL	TYPE A	TYPE C	TYPE G	TYPE H
			LF					SQFT													EA			
PD-19	A4 359+50 TO 373+50	13M		8007																	667		168	
	A4 372+19 TO 373+50	14M		393																	33	9		
	A4 359+50 TO 373+50	25	2800																					59
	A4 359+50 TO 373+50	27B		2800																				
	A4 367+45 TO 373+50	37					605																36	
	A4 372+19 TO 373+50	37					131															8	5	
	A4 367+75 TO 365+19	38B				444																	39	
	VR4 359+50 TO 363+00	25A	400																					18
	VR4 359+50 TO 363+00	27B		400																				
	VR4 363+00 TO 367+45	36A		445		445																	20	
	VL2 374+12 TO 376+75	12		263																			7	
	VL2 374+12 TO 376+75	36				526																	24	
	VL2 368+50 TO 368+90	27B		40																				
	VL5 368+20 TO 373+44	36				910																	80	
	VL5 368+50 TO 374+10	25A	590																					26
	VL5 368+80 TO A3 367+75	27B		695																				
	PAVEMENT MARKING																	32	31	44				
PD-20	A3 373+50 TO 387+50	13M		7929																	661		166	
	A3 373+50 TO 373+63	14M		39																	3	4		
	A3 381+29 TO 382+25	14M		432																	36	12		
	A3 373+50 TO 387+50	25	2800																					59
	A3 373+50 TO 387+50	27B		2800																				
	A3 373+50 TO 382+25	37					875															8	58	
	A3 373+50 TO 383+55	37					1005																63	
	A3 383+55 TO 384+55	38A				100																		
	A3 382+25 TO 385+73	38B				348																	31	
	DR2 385+73 TO 387+50	36				354																	32	
	DL2 384+55 TO 387+50	36B		295		590																	26	
	PAVEMENT MARKING															33		66						
SHEET TOTAL			6590	24538		3717	2616									33		98	31	44	1400	41	755	162

NOTE: FOR TOTALS SEE SHEET PDQ-13

PAVEMENT DELINEATION QUANTITIES

PDQ-7

STATE OF CALIFORNIA - DEPARTMENT OF TRANSPORTATION
Caltrans DESIGN
FUNCTIONAL SUPERVISOR ARVIND K. GUPTA
CALCULATED-DESIGNED BY FANNY YEONG
CHECKED BY ZORA S. MANGAT
REVISED BY HL
DATE REVISED 7/20/09

LAST REVISION 11-02-09
DATE PLOTTED => 04-FEB-2010
TIME PLOTTED => 13:10

Dist	COUNTY	ROUTE	POST MILES TOTAL PROJECT	SHEET No.	TOTAL SHEETS
04	CC	680	0.0/R12.8	326	504

Zora S. Mangat 8/7/09
REGISTERED CIVIL ENGINEER DATE

2-1-10
PLANS APPROVAL DATE

REGISTERED PROFESSIONAL ENGINEER Z. Mangat No. 44843 Exp 3-31-10 CIVIL STATE OF CALIFORNIA

THE STATE OF CALIFORNIA OR ITS OFFICERS OR AGENTS SHALL NOT BE RESPONSIBLE FOR THE ACCURACY OR COMPLETENESS OF SCANNED COPIES OF THIS PLAN SHEET.

TRAFFIC STRIPES, PAVEMENT MARKING AND PAVEMENT MARKERS

SHEET No.	STATION	DETAIL No.	THERMOPLASTIC TRAFFIC STRIPE					THERMOPLASTIC PAVEMENT MARKING														PAVEMENT MARKER			
																						NON-REFLECTIVE	REFLECTIVE		
			4'' YELLOW	4'' WHITE	4'' WHITE (BROKEN 17-7)	8'' WHITE	8'' WHITE (BROKEN 12-3)	12'' WHITE	TYPE I 24'' ARROW	TYPE II (B)	TYPE II (L)	TYPE II (R)	TYPE III (L)	TYPE III (R)	TYPE III (B)	TYPE V	TYPE VI	STOP	SIGNAL	AHEAD	DIAMOND SYMBOL	TYPE A	TYPE C	TYPE G	TYPE H
			LF					SQFT														EA			
PD-21	A3 387+50 TO 400+50	13M		7218																		602		151	
	A3 387+50 TO 400+50	14M		582																		49	15		
	A3 387+50 TO 400+50	25	2600																						55
	A3 387+50 TO 400+50	27B		1350																					
	A3 387+50 TO 388+50	36				200																		9	
	A3 394+8 TO 397+35	36A		255		255																		12	
	A3 397+35 TO 400+50	8			315																				
	A3 387+50 TO 390+70	36B			320	320																		14	
	DR2 387+50 TO 398+00	27B		1050																					
	DR2 396+00 TO 398+00	38A				200																			
	DR2 388+50 TO 398+00	25A	950																						41
	DR3 396+80 TO 404+80	25A	800																						34
	DR3 396+80 TO 410+50	27B		1370																					
	DR3 396+80 TO 397+50	36				140																			
	DR4 398+00 TO 400+50	25A	250																						11
	DR4 398+00 TO 400+50	27B		250																					
	DL2 390+70 TO 397+60	25A	690																						30
	DL2 390+70 TO 397+60	27B		690																					
	DL3A 398+80 TO 400+50	9			40																			2	
	DL3A 398+80 TO 400+50	27B		150																					
	DL3A 398+80 TO 400+50	38				140																		7	
	DL3A 398+80 TO 400+50	38A				200																			
	PAVEMENT MARKING							510	93	118	90		168	42		33			32	31	66				
PD-22	A3 400+50 TO 412+50	13M		6918																		577		145	
	A3 400+50 TO 412+50	14M		282																		24	9		
	A3 400+50 TO 401+50	8			100																				
	A3 400+50 TO 412+50	25	2400																						51
	A3 400+50 TO 412+50	27B		3340																					
	A3 404+60 TO 408+50	36A		390		390																		17	
	A3 400+50 TO 412+50	37					435																8	25	
	A3 405+50 TO 409+15	36		368		730																		31	
	A3 405+15 TO 412+50	38B					300																	27	
	DL3 400+50 TO 401+50	9			100																			4	
	DL3 400+50 TO 401+50	38				100																		5	
	A3 400+50 TO 412+50	25A	880																						38
	PAVEMENT MARKING										45		42	42		66			32	31	44				
	SHEET TOTAL		8570	24213	875	2675	735	510	93	118	135		210	84		99			64	62	110	1252	32	449	260

NOTE: FOR TOTALS SEE SHEET PDQ-13

PAVEMENT DELINEATION QUANTITIES

PDQ-8

STATE OF CALIFORNIA - DEPARTMENT OF TRANSPORTATION
Caltrans DESIGN
FUNCTIONAL SUPERVISOR ARVIND K. GUPTA
CALCULATED-DESIGNED BY FANNY YEONG
CHECKED BY ZORA S. MANGAT
REVISED BY HL
DATE REVISED 7/20/09

LAST REVISION 11-02-09
DATE PLOTTED => 04-FEB-2010
TIME PLOTTED => 13:10

Dist	COUNTY	ROUTE	POST MILES TOTAL PROJECT	SHEET No.	TOTAL SHEETS
04	CC	680	0.0/R12.8	327	504

Zora S. Mangat 8/7/09
REGISTERED CIVIL ENGINEER DATE

2-1-10
PLANS APPROVAL DATE

REGISTERED PROFESSIONAL ENGINEER
Z. Mangat
No. 44843
Exp 3-31-10
CIVIL
STATE OF CALIFORNIA

THE STATE OF CALIFORNIA OR ITS OFFICERS OR AGENTS SHALL NOT BE RESPONSIBLE FOR THE ACCURACY OR COMPLETENESS OF SCANNED COPIES OF THIS PLAN SHEET.

TRAFFIC STRIPES, PAVEMENT MARKING AND PAVEMENT MARKERS

SHEET No.	STATION	DETAIL No.	THERMOPLASTIC TRAFFIC STRIPE					THERMOPLASTIC PAVEMENT MARKING														PAVEMENT MARKER			
																						NON-REFLECTIVE	REFLECTIVE		
			4'' YELLOW	4'' WHITE	4'' WHITE (BROKEN 17-7)	8'' WHITE	8'' WHITE (BROKEN 12-3)	12'' WHITE	TYPE I 24'' ARROW	TYPE II (B)	TYPE II (L)	TYPE II (R)	TYPE III (L)	TYPE III (R)	TYPE III (B)	TYPE V	TYPE VI	STOP	SIGNAL	AHEAD	DIAMOND SYMBOL	TYPE A	TYPE C	TYPE G	TYPE H
			LF					SQFT														EA			
	A3 412+50 TO 424+50	13M		6336																		528		133	
	A3 412+50 TO 424+50	14M		864																		72	24		
	A3 412+50 TO 424+50	25	2400																						51
	A3 412+50 TO 424+50	27B		2400																					
PD-23	A3 412+50 TO 424+50	37					1430																8	92	
	A3 412+50 TO 424+50	38B				400																		36	
	A3 420+80 TO 424+50	36				740																		32	
	A3 422+50 TO 424+50	36A		200		200																		9	
	PAVEMENT MARKING															33			32	31	66				
	424+50 TO 438+50	13M		8400																		700		176	
	424+50 TO 438+51	25	2800																						59
	424+50 TO 438+52	27B		2607																					
	424+50 TO 438+53	36A		193		193																		9	
	PR3 424+50 TO PR1 430+20	25A	570																						25
	PR3 424+50 TO PR1 430+20	27B		570																					
	PR1 428+50 TO 429+70	38				150																		8	
	PR1 429+70 TO 430+05	38A				30																			
	PR4 431+00 TO 436+90	25A	582																						25
PD-24	PR4 431+00 TO 438+50	27B		750																					
	PR4 431+00 TO 432+50	9			150																			5	
	PL3 424+75 TO 430+80	25A	605																						26
	PL3 424+75 TO 430+80	27B		630																					
	PL3 429+25 TO 430+80	9			155																				
	PL2 431+80 TO 438+60	25A	680																						29
	PL2 431+80 TO 438+60	27B		680																					
	PL2 431+80 TO 433+70	38				190																		9	
	PL2 431+80 TO 431+05	38A				20																			
	PAVEMENT MARKING							400	124		180			168							44				
	A3 438+50 TO 453+50	13M		8568																		714		180	
	A3 446+49 TO 447+93	14M		432																		36	12		
	A3 438+50 TO 453+50	25	3000																						64
PD-25	A3 438+50 TO 438+70	25A	20																						2
	A3 438+50 TO 453+50	27B		3020																					
	PR4 438+50 TO 443+70	36A		250		250																		11	
	A3 441+00 TO 445+00	8			300																				
	PL4 438+70 TO 442+20	36				700																		30	
	PAVEMENT MARKING															33			32	31	66				
SHEET TOTAL			10657	35900	605	2873	1430	400	124		180			168		66			64	62	176	2050	44	730	281

NOTE: FOR TOTALS SEE SHEET PDQ-13

PAVEMENT DELINEATION QUANTITIES

PDQ-9

STATE OF CALIFORNIA - DEPARTMENT OF TRANSPORTATION
Caltrans® DESIGN

FUNCTIONAL SUPERVISOR: ARVIND K. GUPTA
CALCULATED-DESIGNED BY: FANNY YEONG
CHECKED BY: ZORA S. MANGAT
REVISED BY: HL
DATE REVISED: 7/20/09

LAST REVISION 11-02-09
DATE PLOTTED => 04-FEB-2010
TIME PLOTTED => 13:10

Dist	COUNTY	ROUTE	POST MILES TOTAL PROJECT	SHEET No.	TOTAL SHEETS
04	CC	680	0.0/R12.8	328	504

Zora S. Mangat 8/7/09
REGISTERED CIVIL ENGINEER DATE

2-1-10
PLANS APPROVAL DATE

REGISTERED PROFESSIONAL ENGINEER Z. Mangat No. 44843 Exp 3-31-10 CIVIL STATE OF CALIFORNIA

THE STATE OF CALIFORNIA OR ITS OFFICERS OR AGENTS SHALL NOT BE RESPONSIBLE FOR THE ACCURACY OR COMPLETENESS OF SCANNED COPIES OF THIS PLAN SHEET.

TRAFFIC STRIPES, PAVEMENT MARKING AND PAVEMENT MARKERS

SHEET No.	STATION	DETAIL No.	THERMOPLASTIC TRAFFIC STRIPE					THERMOPLASTIC PAVEMENT MARKING														PAVEMENT MARKER			
																						NON-REFLECTIVE	REFLECTIVE		
			4'' YELLOW	4'' WHITE	4'' WHITE (BROKEN 17-7)	8'' WHITE	8'' WHITE (BROKEN 12-3)	12'' WHITE	TYPE I 24'' ARROW	TYPE II (B)	TYPE II (L)	TYPE II (R)	TYPE III (L)	TYPE III (R)	TYPE III (B)	TYPE V	TYPE VI	STOP	SIGNAL	AHEAD	DIAMOND SYMBOL	TYPE A	TYPE C	TYPE G	TYPE H
			LF					SQFT														EA			
PD-26	A3 453+50 TO 467+50	13M		8400																		700		176	
	A3 453+50 TO 467+50	25	2800																						59
	A3 453+50 TO 467+50	27B		2480																					
	A3 466+20 TO 467+50	36				120																			
	ER2 465+37 TO 467+50	36A		213		213																		10	
	ER2 461+59 TO 467+50	27B		591																					
	ER2 462+00 TO 463+00	9			100																				
	ER2 461+59 TO 465+37	25A	377																						17
	ER2 461+59 TO 462+00	38A				90																			
	EL2 461+50 TO 463+10	9			60																				
	EL2 461+00 TO 466+42	25A	542																						24
	EL2 461+00 TO 467+50	27B		650																					
	EL2 461+05 TO 462+50	38A				170																			
	PAVEMENT MARKING							150	62				42	42		66		66		31	66				
PD-27	A3 467+50 TO 496+50	13M		16536																		1378		346	
	A3 467+50 TO 496+50	14M		864																		72	24		
	A3 467+50 TO 496+50	25	5800																						122
	A3 467+50 TO 496+50	27B		5800																					
	ER2 467+50 TO 471+69	36A		116	300	116																		6	
	EL2 467+50 TO 469+90	36				460																		20	
	PAVEMENT MARKING															33					132				
PD-28	A4 496+50 TO 525+50	13M		16536																		1378		346	
	A4 496+50 TO 525+50	14M		864																		72	24		
	A4 496+50 TO 525+50	25	5800																						122
	A4 496+50 TO 525+50	27B		5800																					
	PAVEMENT MARKING																				132				
PD-29	A4 525+50 TO 538+50	13M		7368																		614		155	
	A4 529+76 TO 531+20	14M		432																		36			
	A4 525+50 TO 538+50	25	2600																						55
	A4 525+50 TO 538+50	27B		2660																					
	GR4 535+18 TO 538+45	36				654																		28	
	A4 538+00 TO 538+50	25A	50																						3
	A4 534+00 TO 538+00	36A		400		400																		18	
	A4 530+00 TO 534+00	8			400																				
	PAVEMENT MARKING															33					44				
SHEET TOTAL			17969	69710	860	2223		150	62				42	42		132		66		31	374	4250	48	1105	402

NOTE: FOR TOTALS SEE SHEET PDQ-13

PAVEMENT DELINEATION QUANTITIES

PDQ-10

REVISED BY	DATE REVISED
HL	7/20/09

FANNY YEONG — ZORA S. MANGAT
CALCULATED-DESIGNED BY — CHECKED BY
FUNCTIONAL SUPERVISOR — ARVIND K. GUPTA

STATE OF CALIFORNIA - DEPARTMENT OF TRANSPORTATION
Caltrans® DESIGN

LAST REVISION 11-02-09 | DATE PLOTTED => 04-FEB-2010 | TIME PLOTTED => 13:10

Dist	COUNTY	ROUTE	POST MILES TOTAL PROJECT	SHEET No.	TOTAL SHEETS
04	CC	680	0.0/R12.8	329	504

Zora S. Mangat 8/7/09
REGISTERED CIVIL ENGINEER DATE

2-1-10
PLANS APPROVAL DATE

REGISTERED PROFESSIONAL ENGINEER Z. Mangat No. 44843 Exp 3-31-10 CIVIL STATE OF CALIFORNIA

THE STATE OF CALIFORNIA OR ITS OFFICERS OR AGENTS SHALL NOT BE RESPONSIBLE FOR THE ACCURACY OR COMPLETENESS OF SCANNED COPIES OF THIS PLAN SHEET.

TRAFFIC STRIPES, PAVEMENT MARKING AND PAVEMENT MARKERS

SHEET No.	STATION	DETAIL No.	THERMOPLASTIC TRAFFIC STRIPE					THERMOPLASTIC PAVEMENT MARKING														PAVEMENT MARKER			
																						NON-REFLECTIVE	REFLECTIVE		
			4'' YELLOW	4'' WHITE	4'' WHITE (BROKEN 17-7)	8'' WHITE	8'' WHITE (BROKEN 12-3)	12'' WHITE	TYPE I 24'' ARROW	TYPE II (B)	TYPE II (L)	TYPE II (R)	TYPE III (L)	TYPE III (R)	TYPE III (B)	TYPE V	TYPE VI	STOP	SIGNAL	AHEAD	DIAMOND SYMBOL	TYPE A	TYPE C	TYPE G	TYPE H
			LF					SQFT														EA			
PD-30	A4 538+50 TO 545+50	13M		3768																		314		80	
	A4 538+50 TO 545+50	14M		432																		36	12		
	A4 538+50 TO 545+50	25	1400																						30
	A4 538+50 TO 545+50	27B		1400																					
	GR4 538+50 TO 545+50	25A	700																						30
	GR4 538+50 TO 545+50	27B		700																					
	GR5 545+00 TO 545+50	36				68																		4	
	GL5 548+70 TO 557+20	25A	878																						38
	GL5 548+70 TO 557+20	27B		878																					
	GL4 538+75 TO 546+70	25A	800																						34
	GL4 538+75 TO 546+70	27B		800																					
	GL4 546+40 TO 546+70	38A				60																			
	PAVEMENT MARKING							190	62					42		99		44		62	44				
PD-31	A4 545+50 TO 553+50	13M		4800																		400		101	
	A4 545+50 TO 553+50	25	1600																						34
	A4 545+50 TO 553+50	27B		1385																					
	GR4 545+50 TO 546+60	25A	120																					6	
	GR4 545+50 TO 546+60	27B		120																					
	GR5 545+50 TO 547+70	36				430																		19	
	GR5 547+70 TO 557+70	25A	1000																						43
	GR5 545+50 TO 557+70	27B		1220																					
	GR6 547+90 TO 554+50	25A	660																						29
	GR6 547+90 TO 554+50	27B		660																					
	GR6 547+90 TO 548+10	38B				40																		6	
	GL5 545+18 TO 548+50	36				680																		29	
	GL6 546+70 TO 554+50	25A	780																						34
	GL6 546+70 TO 554+50	27B		780																					
	PAVEMENT MARKING							320	62					126		132		110		62	22				
PD-32	A4 553+50 TO 576+50	13M		12507																		1042		262	
	A4 553+50 TO 565+50	14M		1296																		108	33		
	A4 553+50 TO 576+50	25	4600																						97
	A4 553+50 TO 576+50	27B		4805																					
	A4 558+75 TO 562+75	8			400																				
	GR6 556+40 TO 562+93	36A		353		353																		16	
	GR6 554+50 TO 556+40	25A	190																						9
	GL6 554+20 TO 555+80	25A	160																						8
	GL6 555+70 TO 559+59	36				720																		31	
	PAVEMENT MARKING															33					110				
SHEET TOTAL			12888	35904	400	2351		510	124					168		264		154		124	176	1900	45	554	386

NOTE: FOR TOTALS SEE SHEET PDQ-13

PAVEMENT DELINEATION QUANTITIES

PDQ-11

STATE OF CALIFORNIA - DEPARTMENT OF TRANSPORTATION
Caltrans® DESIGN

FUNCTIONAL SUPERVISOR: ARVIND K. GUPTA
CALCULATED-DESIGNED BY: FANNY YEONG
CHECKED BY: ZORA S. MANGAT
REVISED BY: HL
DATE REVISED: 7/20/09

LAST REVISION 11-02-09
DATE PLOTTED => 04-FEB-2010
TIME PLOTTED => 13:10

Dist	COUNTY	ROUTE	POST MILES TOTAL PROJECT	SHEET No.	TOTAL SHEETS
04	CC	680	0.0/R12.8	330	504

Zora S. Mangat 8/7/09
REGISTERED CIVIL ENGINEER DATE

2-1-10
PLANS APPROVAL DATE

REGISTERED PROFESSIONAL ENGINEER Z. Mangat No. 44843 Exp 3-31-10 CIVIL STATE OF CALIFORNIA

THE STATE OF CALIFORNIA OR ITS OFFICERS OR AGENTS SHALL NOT BE RESPONSIBLE FOR THE ACCURACY OR COMPLETENESS OF SCANNED COPIES OF THIS PLAN SHEET.

TRAFFIC STRIPES, PAVEMENT MARKING AND PAVEMENT MARKERS

SHEET No.	STATION	DETAIL No.	THERMOPLASTIC TRAFFIC STRIPE					THERMOPLASTIC PAVEMENT MARKING														PAVEMENT MARKER			
																						NON-REFLECTIVE	REFLECTIVE		
			4'' YELLOW	4'' WHITE	4'' WHITE (BROKEN 17-7)	8'' WHITE	8'' WHITE (BROKEN 12-3)	12'' WHITE	TYPE I 24'' ARROW	TYPE II (B)	TYPE II (L)	TYPE II (R)	TYPE III (L)	TYPE III (R)	TYPE III (B)	TYPE V	TYPE VI	STOP	SIGNAL	AHEAD	DIAMOND SYMBOL	TYPE A	TYPE C	TYPE G	TYPE H
			LF					SQFT														EA			
	A3 576+50 TO 589+50	13M		7368																		614		155	
	A3 581+17 TO 582+61	14M		432																		36	12		
	A3 576+56 TO 589+50	25	2600																						55
	A3 576+56 TO 589+50	27B		2785																					
PD-33	LR3 586+95 TO 589+50	36				510																		22	
	A3 579+80 TO 584+00	8			420																				
	LL3 584+00 TO 587+65	36A		365		365																		16	
	LL3 587+50 TO 589+50	25A	185																						9
	PAVEMENT MARKING															33					44				
	A3 589+50 TO 603+50	13M		7536																		628		158	
	A3 589+50 TO 603+50	14M		864																		72	24		
	A3 589+50 TO 603+50	25	2800																						59
	A3 589+50 TO 603+50	27B		2433																					
	LR3 589+50 TO 590+50	36				160																		8	
	LR3 590+50 TO 595+60	25A	528																						23
	LR3 589+50 TO 595+60	27B		610																					
	LR3 592+80 TO 594+20	9			140																			4	
	LR3 594+20 TO 595+60	38A				140																			
PD-34	LR2 596+30 TO 600+65	25A	445																						20
	LR2 595+80 TO 603+50	27B		770																					
	LR2 600+65 TO 603+50	36A		285		285																		13	
	LL4 597+10 TO 603+50	25A	640																						28
	LL4 597+10 TO 603+50	27B		640																					
	LL4 597+10 TO 598+50	38				130																		13	
	LL4 598+50 TO 601+50	9			300																			8	
	LL3 589+50 TO 596+10	25A	680																						29
	LL3 589+50 TO 596+10	27B		680																					
	PAVEMENT MARKING							180	62		45	45	42	42		198		132		62	44				
	A3 603+50 TO 623+50	13M		16536																		1378		346	
	A3 611+50 TO 612+94	14M		432																		36	12		
	A3 622+50 TO 623+94	14M		432																		36	12		
	A3 603+50 TO 623+50	25	5800																						122
PD-35	A3 603+50 TO 623+50	27B		5900																					
	A3 611+50 TO 632+50	37					2100																8	136	
	A3 608+45 TO 610+50	38B				305																		28	
	LL4 604+50 TO 608+45	36				790																		34	
	LL4 603+50 TO 604+50	25A	100																						5
SHEET TOTAL			13778	48068	860	2685	2100	180	62		45	45	42	42		231		132		62	88	2800	68	941	350

NOTE: FOR TOTALS SEE SHEET PDQ-13

PAVEMENT DELINEATION QUANTITIES

PDQ-12

STATE OF CALIFORNIA - DEPARTMENT OF TRANSPORTATION
Caltrans® DESIGN

FUNCTIONAL SUPERVISOR: ARVIND K. GUPTA
CALCULATED-DESIGNED BY: FANNY YEONG
CHECKED BY: ZORA S. MANGAT
REVISED BY: HL
DATE REVISED: 7/20/09

LAST REVISION 11-02-09
DATE PLOTTED => 04-FEB-2010
TIME PLOTTED => 13:10

Dist	COUNTY	ROUTE	POST MILES TOTAL PROJECT	SHEET No.	TOTAL SHEETS
04	CC	680	0.0/R12.8	331	504

Zora S. Mangat 8/7/09
REGISTERED CIVIL ENGINEER DATE

2-1-10
PLANS APPROVAL DATE

REGISTERED PROFESSIONAL ENGINEER Z. Mangat No. 44843 Exp 3-31-10 CIVIL STATE OF CALIFORNIA

THE STATE OF CALIFORNIA OR ITS OFFICERS OR AGENTS SHALL NOT BE RESPONSIBLE FOR THE ACCURACY OR COMPLETENESS OF SCANNED COPIES OF THIS PLAN SHEET.

TRAFFIC STRIPES, PAVEMENT MARKING AND PAVEMENT MARKERS

SHEET No.	STATION	DETAIL No.	THERMOPLASTIC TRAFFIC STRIPE					THERMOPLASTIC PAVEMENT MARKING														PAVEMENT MARKER			
																						NON-REFLECTIVE	REFLECTIVE		
			4'' YELLOW	4'' WHITE	4'' WHITE (BROKEN 17-7)	8'' WHITE	8'' WHITE (BROKEN 12-3)	12'' WHITE	TYPE I 24'' ARROW	TYPE II (B)	TYPE II (L)	TYPE II (R)	TYPE III (L)	TYPE III (R)	TYPE III (B)	TYPE V	TYPE VI	STOP	SIGNAL	AHEAD	DIAMOND SYMBOL	TYPE A	TYPE C	TYPE G	TYPE H
			LF					SQFT														EA			
	LR4 604+50 TO 607+69	36A		50		50																		3	
PD-35	LR4 604+00 TO 607+85	8			385																				
	PAVEMENT MARKING															33					132				
	A3 632+50 TO 660+50	13M		17751																		1479		371	
	A3 640+91 TO 642+35	14M		576																		48	16		
	A3 650+23 TO 651+67	14M		432																		36	12		
	A3 632+50 TO 660+50	25	5600																						118
	A3 632+50 TO 640+91	37					841																8	53	
PD-36	A3 632+50 TO 660+50	27B		5862																					
	R2 654+78 TO 657+85	36				580																		25	
	R2 657+85 TO 660+50	25A	265																						12
	R1 656+20 TO 660+50	25A	428																						19
	A4 652+70 TO 656+22	36A		353		353																		16	
	A4 649+70 TO 652+70	8			300																				
	PAVEMENT MARKING															33					132				
	A4 660+50 TO 673+50	13M		7474																		623		157	
	A4 668+75 TO 670+19	14M		576																		48	16		
	A4 661+50 TO 673+50	25	2250																						48
	A4 661+50 TO 673+50	27B		2250																					
	R2 660+50 TO 667+00	25A	650																						28
	R2 660+50 TO 667+00	27B		650																					
PD-37	R2 664+50 TO 667+00	38				240																		11	
	R2 663+50 TO 667+00	38A				340																			
	R1 660+50 TO 666+00	25A	570																						25
	R1 660+50 TO 666+00	27B		550																					
	R1 660+50 TO 666+00	9			350																			9	
	PAVEMENT MARKING							50	62		180			168		132			32	31	55				
	A4N 673+50 TO 676+00	13M		1000																		83		22	
	A4N 673+50 TO 676+00	25	250																						6
PD-38	A4N 673+50 TO 676+00	27B		250																					
	PAVEMENT MARKING																				11				
	FROM SHEET PDQ-15	27B		107																					
SHEET TOTAL			10013	37881	1035	1563	841	50	62		180			168		198			32	31	330	2317	52	667	256
SUBTOTAL			166705	582740	14815	33020	16138	2072	854	118	855	45	1050	1848	303	1584	378	352	646	651	2750	34135	627	10765	4272
TOTAL			749445		14815	33020	16138	13506														34135	15664		
FROM SHEET PDQ-15								73																	
GRAND TOTAL								13579																	

PAVEMENT DELINEATION QUANTITIES

PDQ-13

STATE OF CALIFORNIA - DEPARTMENT OF TRANSPORTATION
Caltrans®
DESIGN
FUNCTIONAL SUPERVISOR: ARVIND K. GUPTA
CALCULATED-DESIGNED BY: FANNY YEONG
CHECKED BY: ZORA S. MANGAT
REVISED BY: HL
DATE REVISED: 7/20/09

LAST REVISION 11-12-09
DATE PLOTTED => 04-FEB-2010
TIME PLOTTED => 13:28

TEMPORARY PAVEMENT DELINEATION

Dist	COUNTY	ROUTE	POST MILES TOTAL PROJECT	SHEET No.	TOTAL SHEETS
04	CC	680	0.0/R12.8	332	504

Zora S. Mangat 8/7/09
REGISTERED CIVIL ENGINEER DATE

2-1-10
PLANS APPROVAL DATE

REGISTERED PROFESSIONAL ENGINEER Z. Mangat No. 44843 Exp. 3-31-10 CIVIL STATE OF CALIFORNIA

THE STATE OF CALIFORNIA OR ITS OFFICERS OR AGENTS SHALL NOT BE RESPONSIBLE FOR THE ACCURACY OR COMPLETENESS OF SCANNED COPIES OF THIS PLAN SHEET.

SOUTHBOUND

SHEET No.	DETAIL No.	STATION	TEMPORARY PAVEMENT MARKER NON-REFLECTIVE TYPE A (EA)	TEMPORARY PAVEMENT MARKER RETROREFLECTIVE TYPE G (EA)	TEMPORARY TRAFFIC STRIPE (PAINT) 4'' WHITE (LF)	TEMPORARY TRAFFIC STRIPE (PAINT) 4'' YELLOW (LF)	DIAMOND SYMBOL (SQFT)
TH-1	13	B 565+00 TO A 14+50	438	112			
	27B	B 565+00 TO A 14+50			1750		
	24	B 565+00 TO A 4+00				700	
TH-2	13	A 14+50 TO 44+50	750	191			55
	27-B	A 14+50 TO 22+50			795		
	27-B	A 24+00 TO 44+50			2050		
	27-B	A 22+45 TO 24+25			180		
	27-B	A 22+45 TO 24+25			180		
TH-3	13	A 44+50 TO A4 72+50	700	178			55
	27-B	A 44+50 TO A4 72+50			2800		
TH-4	13	A4 72+50 TO 102+50	750	191			66
	27-B	A4 72+50 TO 102+50			3000		
TH-5	13	A4 102+50 TO 132+50	750	191			66
	27-B	A4 102+50 TO 132+50			3000		
	27-B	A4 131+50 TO 132+50			100		
	24	A4 130+00 to 132+50				250	
TH-6	13	A4 132+50 TO 144+00	288	75			11
	27-B	A4 132+50 TO 138+50			600		
	27-B	A4 132+50 TO 144+00			1150		
	24	A4 132+50 TO 144+00				1150	
TH-7	13	A4 153+00 TO 156+50	59	17			
	27-B	A4 153+00 TO 156+50			350		
TH-8	13	A4 156+50 TO 165+15	145	39			
	27-B	A4 156+50 TO 166+00			950		
TH-9	13	A4 179+00 TO 200+50	538	138			44
	27-B	A4 179+00 TO 200+50			2150		
	27-B	A4 195+75 TO 200+50			475		
	24	A4 179+00 TO 186+00				700	
	24	A4 196+00 to 200+50				450	
TH-10	13	A4 200+50 TO 202+75	56	18			11
	27-B	A4 200+50 TO 202+75			225		
	27-B	A4 200+50 TO 202+75			225		
	24	A4 200+50 TO 202+75				225	
TH-11	13	A4 217+20 TO 224+50	122	33			
	27-B	A4 217+20 TO 224+50			730		
TH-12	13	A4 224+50 TO 235+50	183	48			11
	13	A4 235+50 TO 239+50	134	38			
	27-B	A4 224+50 TO 233+50			900		
	24	A4 235+50 TO 239+50				400	
TH-13	13	A4 239+50 TO 267+50	700	186			66
	13	A4 239+50 TO 242+50	25	20			
	27-B	A4 242+50 TO 267+50			2500		
	24	A4 239+50 TO 242+50				300	
TH-14	13	A4 267+50 TO 296+50	725	185			55
	27-B	A4 267+50 TO 296+50			2900		
	24	A4 277+00 TO 283+00				600	
TH-15	13	A4 296+50 TO 324+50	700	178			44
	27-B	A4 296+50 TO 324+50			2800		
TH-16	13	A4 324+50 TO 338+50	350	91			22
	27-B	A4 324+50 TO 338+50			1400		
	27-B	A4 338+00 TO 338+50			50		
TH-17	13	A4 338+50 TO 350+50	300	78			33
	27-B	A4 338+50 TO 350+50			1200		
	27-B	A4 338+50 TO 339+00			50		
	24	A4 343+00 TO 350+00				700	
TH-18	13	A4 350+50 TO 355+40	82	22			
	27-B	A4 350+50 TO 359+50			900		
TH-20	13	A3 386+00 TO 387+50	38	13			11
	24	A3 386+00 TO 387+50				150	
TH-21	13	A3 387+50 TO 400+50	325	85			33
	27-B	A3 392+35 TO 400+50			815		
	24	A3 387+50 TO 392+35				485	
	24	A3 398+00 TO 400+50				250	

CONTINUE TO SHEET PDQ-15

PAVEMENT DELINEATION QUANTITIES

PDQ-14

STATE OF CALIFORNIA - DEPARTMENT OF TRANSPORTATION
Caltrans DESIGN

FUNCTIONAL SUPERVISOR: ARVIND K. GUPTA
CALCULATED-DESIGNED BY: FANNY YEONG
CHECKED BY: ZORA S. MANGAT
REVISED BY: HL
DATE REVISED: 7/20/09

LAST REVISION 07-23-09
DATE PLOTTED => 04-FEB-2010
TIME PLOTTED => 13:28

Dist	COUNTY	ROUTE	POST MILES TOTAL PROJECT	SHEET No.	TOTAL SHEETS
04	CC	680	0.0/R12.8	333	504

Zora S. Mangat 8/7/09
REGISTERED CIVIL ENGINEER DATE

2-1-10
PLANS APPROVAL DATE

REGISTERED PROFESSIONAL ENGINEER Z. Mangat No. 44843 Exp. 3-31-10 CIVIL STATE OF CALIFORNIA

THE STATE OF CALIFORNIA OR ITS OFFICERS OR AGENTS SHALL NOT BE RESPONSIBLE FOR THE ACCURACY OR COMPLETENESS OF SCANNED COPIES OF THIS PLAN SHEET.

TEMPORARY PAVEMENT DELINEATION (CONTINUED)

	SHEET No.	DETAIL No.	STATION	TEMPORARY PAVEMENT MARKER NON-REFLECTIVE TYPE A	TEMPORARY PAVEMENT MARKER RETROREFLECTIVE TYPE G	TEMPORARY TRAFFIC STRIPE (PAINT) 4'' WHITE	TEMPORARY TRAFFIC STRIPE (PAINT) 4'' YELLOW	DIAMOND SYMBOL
				EA		LF		SQFT
SOUTHBOUND	TH-22	13	A3 400+50 TO 407+50	117	31			
		13	A3 400+50 TO 403+50	25	8			
		27-B	A3 400+50 TO 407+50			700		
		24	A3 400+50 TO 403+50				300	
	SUBTOTAL			8300	2166	34925	6660	583
NORTHBOUND	TH-1	13	B3 564+85 TO A 14+50	442	114			33
		27-B	B 564+80 TO A 14+50			1765		
		24	B 564+85 TO A 4+00				715	
	TH-2	13	A 14+50 TO 44+50	750	191			55
		27-B	A 16+80 TO 44+50			2700		
		27-B	A 14+50 TO 23+80			930		
		27-B	A 14+50 TO 23+80			930		
	TH-3	13	A 44+50 TO A4 72+50	700	178			55
		27-B	A 44+50 TO A4 72+50			2800		
	TH-4	13	A4 72+50 TO 102+50	750	191			66
		27-B	A4 72+50 TO 102+50			3000		
	TH-5	13	A4 102+50 TO 130+00	688	175			55
		27-B	A4 102+50 TO 130+00			2750		
		24	A4 123+00 TO 130+00				700	
	TH-6	13	A4 139+90 TO 147+50	127	34			
		27-B	A4 139+90 TO 147+50			760		
	TH-7	13	A4 147+50 TO 151+20	62	18			
		27-B	A4 147+50 TO 151+20			370		
	TH-10	13	A4 210+95 TO 215+50	76	21			
		27-B	A4 210+95 TO 215+50			455		
	TH-11	13	A4 215+50 TO 224+50	150	40			
		27-B	A4 215+50 TO 224+50			900		
	TH-12	13	A4 224+50 TO 225+30	14	6			
		27-B	A4 224+50 TO 225+30			80		
	TH-13	13	A4 240+00 TO 267+50	688	175			66
		27-B	A4 240+00 TO 267+50			2750		
		24	A4 240+00 TO 249+00				900	
	TH-14	13	A4 267+50 TO 296+50	725	185			55
		27-B	A4 267+50 TO 296+50			2900		
		24	A4 277+00 TO 283+00				600	
	TH-15	13	A4 296+50 TO 324+50	700	178			44
		27-B	A4 296+50 TO 324+50			2800		
	TH-16	13	A4 324+50 TO 338+50	350	91			22
		27-B	A4 324+50 TO 338+50			1400		
		27-B	A4 337+55 TO 338+50			95		
		27-B	A4 337+55 TO 338+50			95		
	TH-17	13	A4 338+50 TO 350+50	300	78			22
		27-B	A4 338+50 TO 350+50			1200		
		27-B	A4 338+50 TO 339+50			100		
		27-B	A4 338+50 TO 339+50			100		
		24	A4 338+50 TO 339+50				700	
	TH-18	13	A3 340+00 TO 347+00	150	40			
		27-B	A4 350+50 TO 359+50			900		
	TH-19	13	A4 359+50 TO A3 364+50	84	23			
		27-B	A4 359+50 TO A3 364+50			500		
	TH-20	13	A3 385+50 TO 387+50	50	16			11
		24	A3 385+50 TO 387+50				200	
	TH-21	13	A3 387+50 TO 400+50	325	85			33
		27-B	A3 389+40 TO 400+50			1110		
		24	A3 387+50 TO 393+00				550	
		24	A3 398+00 TO 400+50				250	
	TH-22	13	A3 400+50 TO 404+00	88	25			
		27-B	A3 400+50 TO 404+00			350		
		24	A3 400+50 TO 404+00				350	
	SUBTOTAL			7219	1864	31740	4965	517
	TOTAL			19549		78290		1100

REMOVE EXISTING TRAFFIC STRIPE, PAVEMENT MARKING AND PAVEMENT MAKERS

SHEET No.	STATION	REMOVE PAVEMENT MARKER	REMOVE TRAFFIC STRIPE	REMOVE YELLOW TRAFFIC STRIPE	REMOVE PAVEMENT MARKING
		EA	THERMOPLASTIC LF	THERMOPLASTIC LF	THERMOPLASTIC SQFT
TH-1	B 565+00 TO A 14+50	973	2150	3500	22
TH-2	A 14+50 TO 44+50	1690	3750	6000	99
TH-3	A4 44+50 TO 72+50	1285	2800	5600	132
TH-4	A4 72+50 TO 102+50	1377	3000	6000	132
TH-5	A4 102+50 TO 132+50	1393	3050	5750	121
TH-6	A4 132+50 TO 147+50	424	1573	790	22
TH-7	A4 147+50 TO 156+50	151	1080		
TH-8	A4 156+50 TO 165+15	181	1298		
TH-9	A4 179+00 TO 200+50	839	2443	2150	
TH-10	A4 200+50 TO 215+50	189	666	225	
TH-11	A4 215+50 TO 224+50	341	815		
TH-12	A4 224+50 TO 239+50	410	970	400	
TH-13	A4 239+50 TO 267+50	1719	3855	5550	132
TH-14	A4 267+50 TO 296+50	1331	2900	5800	110
TH-15	A3 296+50 TO 324+50	1285	2800	5600	88
TH-16	A3 324+50 TO 338+50	737	1625	2800	44
TH-17	A3 338+50 TO 350+50	794	1800	2000	55
TH-18	A3 350+50 TO 359+50	291	695		
TH-19	A3 359+50 TO 364+50	105	250		
TH-20	A3 385+50 TO 387+50	119	263	350	
TH-21	A3 387+50 TO 400+50	869	1950	2600	44
TH-22	A3 400+50 TO 407+50	302	688	650	
PARK AND RIDE (RUDGEAR ROAD)			65		
TOTAL		16805	40421	55765	1001

PARK AND RIDE (RUDGEAR ROAD) PAVEMENT MARKING AND PAVEMENT STRIPE

THERMOPLASTIC				
REMOVE TRAFFIC STRIPE	4" TRAFFIC STRIPE *	PAVEMENT MARKING: ISA MARKING FOR ACCESSIBLE PARKING SPACE * BLUE	PAVEMENT MARKING: ISA MARKING FOR ACCESSIBLE PARKING SPACE * WHITE	PAVEMENT MARKING: NO PARKING *
LF		SQFT		
65	107	42	27	4
TOTAL		73		

* SEE SHEET PDQ-13 FOR TOTAL THERMOPLASTIC PLASTIC STRIPE AND PAVEMENT MARKING

PAVEMENT DELINEATION QUANTITIES

PDQ-15

REVISED BY	DATE REVISED
HL	7/20/09

FUNCTIONAL SUPERVISOR: ARVIND K. GUPTA
CALCULATED-DESIGNED BY: FANNY YEONG
CHECKED BY: ZORA S. MANGAT

STATE OF CALIFORNIA - DEPARTMENT OF TRANSPORTATION
Caltrans DESIGN

LAST REVISION 11-12-09 | DATE PLOTTED => 04-FEB-2010 | TIME PLOTTED => 13:28

Dist	COUNTY	ROUTE	POST MILES TOTAL PROJECT	SHEET No.	TOTAL SHEETS
04	CC	680	0.0/12.8	334	504

REGISTERED CIVIL ENGINEER — DATE 1/25/10

2-1-10
PLANS APPROVAL DATE

Florante P. Perez No. 41030 Exp. 3-31-10 CIVIL — REGISTERED PROFESSIONAL ENGINEER — STATE OF CALIFORNIA

THE STATE OF CALIFORNIA OR ITS OFFICERS OR AGENTS SHALL NOT BE RESPONSIBLE FOR THE ACCURACY OR COMPLETENESS OF SCANNED COPIES OF THIS PLAN SHEET.

FOR ACCURATE RIGHT OF WAY DATA, CONTACT RIGHT OF WAY ENGINEERING AT THE DISTRICT OFFICE.

LEGEND:

- ■ REMOVE ROADSIDE SIGN
- ▲ RESET ROADSIDE SIGN
- ● REMOVE ROADSIDE SIGN PANEL
- (No.) ROADSIDE SIGN NUMBER
- EP INSTALL SIGN PANEL ON EXISTING POST
- BM BARRIER MOUNTED SIGN
- ◇(L) OVERHEAD SIGN LETTER

NOTES:

1. EXACT LOCATION AND POSITION OF ROADSIDE SIGNS ARE TO BE DETERMINED BY THE ENGINEER.
2. EXISTING SIGNS ARE SHOWN IN DROP OUT.

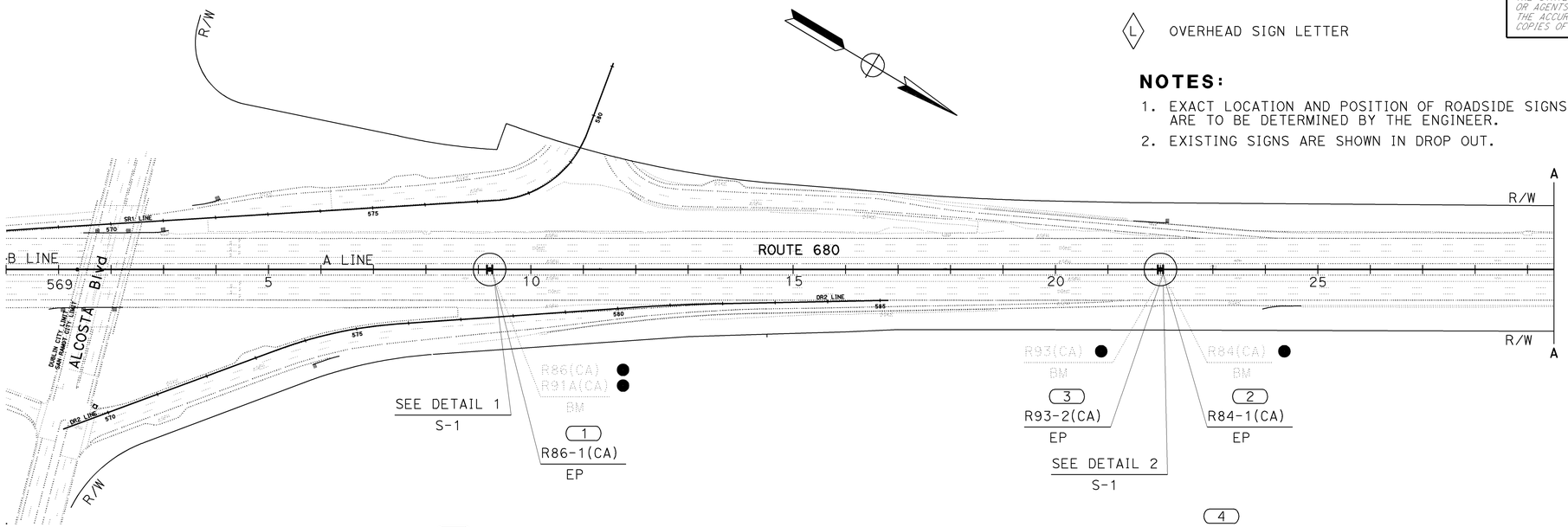

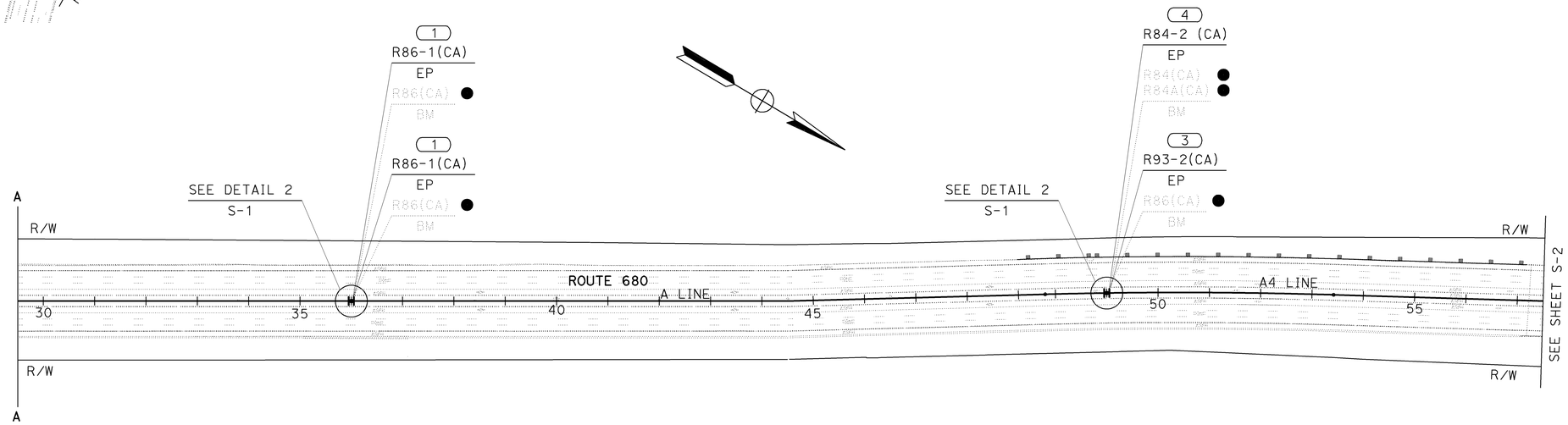

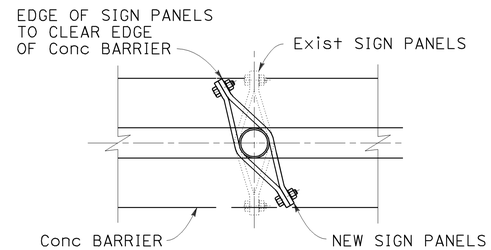

DETAIL 2

SIGN PLAN
NO SCALE

THIS PLAN ACCURATE FOR SIGN WORK ONLY

S-1

STATE OF CALIFORNIA - DEPARTMENT OF TRANSPORTATION
Caltrans
TRAFFIC

FUNCTIONAL SUPERVISOR: LOURDES DAVID
CALCULATED-DESIGNED BY: LEOPOLDO G. BONGATO
CHECKED BY: FLORANTE P. PEREZ
REVISED BY / DATE REVISED

LAST REVISION 01-23-10 | DATE PLOTTED => 04-FEB-2010 | TIME PLOTTED => 13:28

Dist	COUNTY	ROUTE	POST MILES TOTAL PROJECT	SHEET No.	TOTAL SHEETS
04	CC	680	0.0/12.8	335	504

REGISTERED CIVIL ENGINEER 1/25/10 DATE

2-1-10
PLANS APPROVAL DATE

Florante P. Perez No. 41030 Exp. 3-31-10 CIVIL — REGISTERED PROFESSIONAL ENGINEER — STATE OF CALIFORNIA

THE STATE OF CALIFORNIA OR ITS OFFICERS OR AGENTS SHALL NOT BE RESPONSIBLE FOR THE ACCURACY OR COMPLETENESS OF SCANNED COPIES OF THIS PLAN SHEET.

FOR ACCURATE RIGHT OF WAY DATA,
CONTACT RIGHT OF WAY ENGINEERING
AT THE DISTRICT OFFICE.

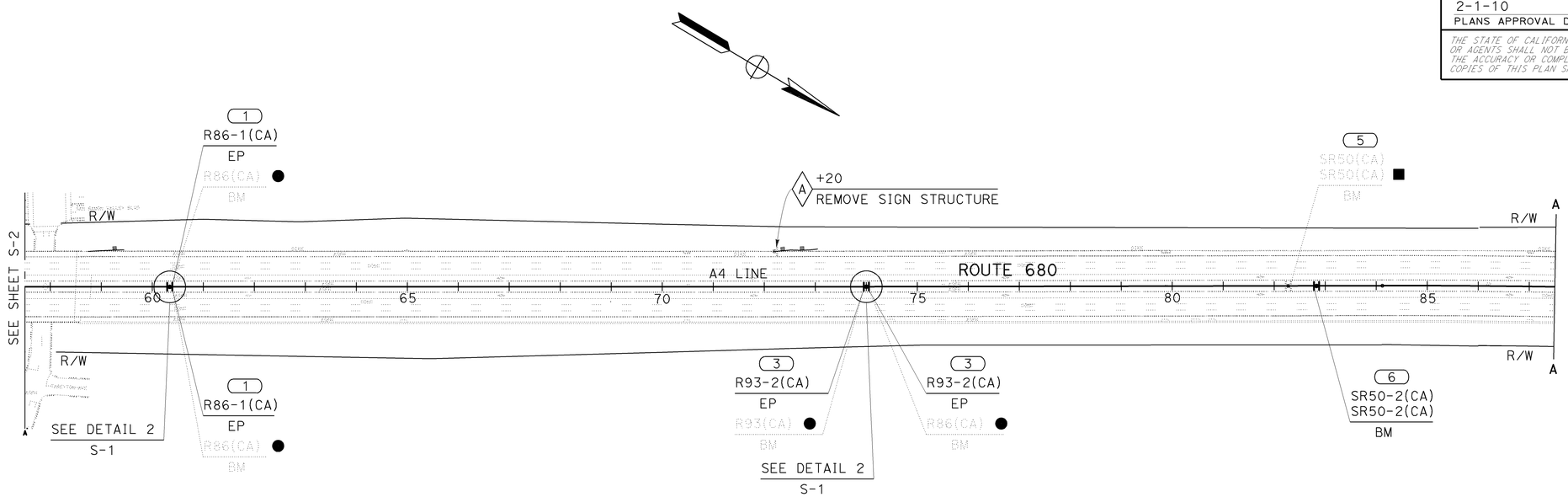

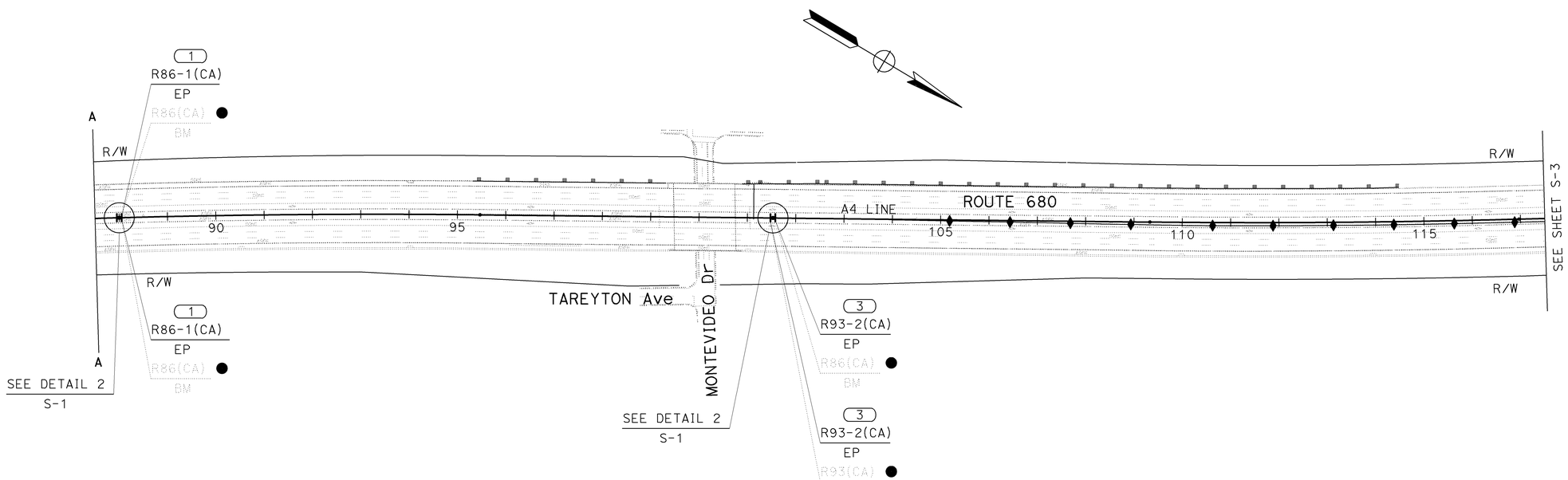

FOR NOTES, ABBREVIATIONS AND LEGEND, SEE SHEET S-1

SIGN PLAN
NO SCALE

THIS PLAN ACCURATE FOR SIGN WORK ONLY

S-2

REVISED BY	DATE REVISED

CALCULATED-DESIGNED BY	CHECKED BY
LEOPOLDO G. BONGATO	FLORANTE P. PEREZ

FUNCTIONAL SUPERVISOR: LOURDES DAVID

STATE OF CALIFORNIA - DEPARTMENT OF TRANSPORTATION
Caltrans®
TRAFFIC

LAST REVISION 01-23-10 | DATE PLOTTED => 04-FEB-2010 | TIME PLOTTED => 13:29

Dist	COUNTY	ROUTE	POST MILES TOTAL PROJECT	SHEET No.	TOTAL SHEETS
04	CC	680	0.0/12.8	336	504

REGISTERED CIVIL ENGINEER 1/25/10 DATE

2-1-10
PLANS APPROVAL DATE

REGISTERED PROFESSIONAL ENGINEER Florante P. Perez No. 41030 Exp. 3-31-10 CIVIL STATE OF CALIFORNIA

THE STATE OF CALIFORNIA OR ITS OFFICERS OR AGENTS SHALL NOT BE RESPONSIBLE FOR THE ACCURACY OR COMPLETENESS OF SCANNED COPIES OF THIS PLAN SHEET.

FOR ACCURATE RIGHT OF WAY DATA,
CONTACT RIGHT OF WAY ENGINEERING
AT THE DISTRICT OFFICE.

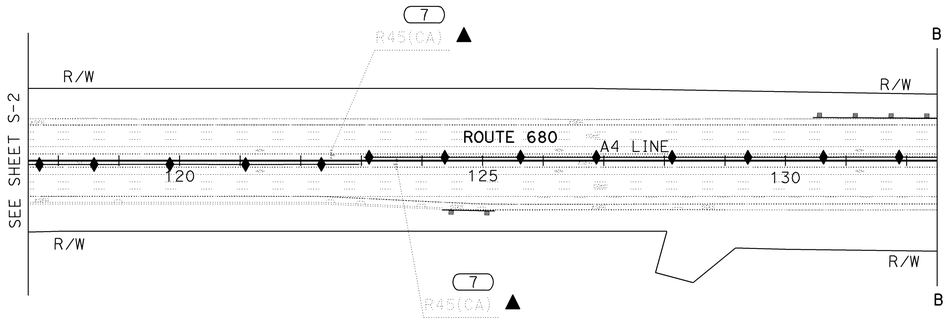

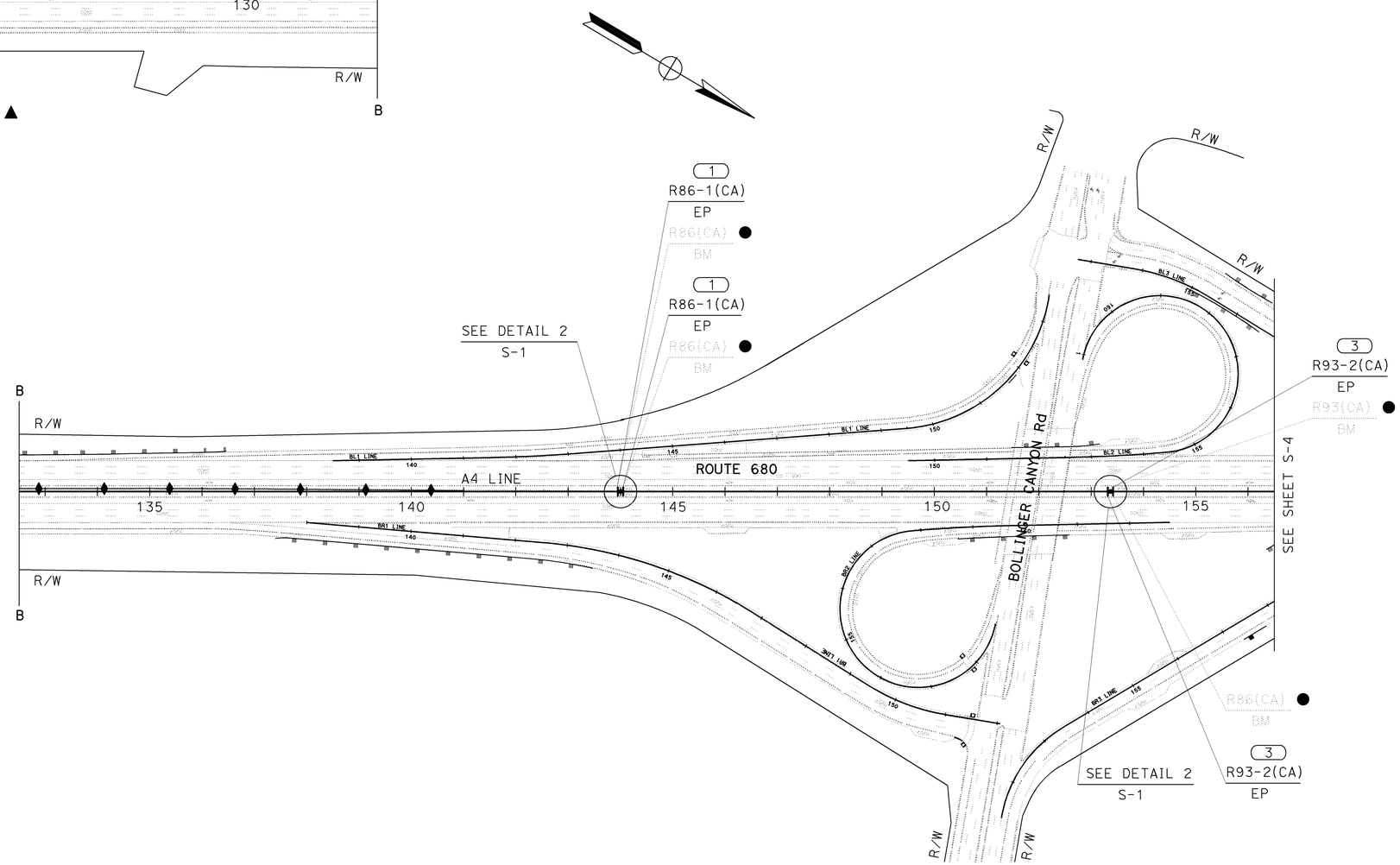

SIGN PLAN

NO SCALE

THIS PLAN ACCURATE FOR
SIGN WORK ONLY

FOR NOTES, ABBREVIATIONS
AND LEGEND, SEE SHEET S-1

S-3

STATE OF CALIFORNIA - DEPARTMENT OF TRANSPORTATION
Caltrans
TRAFFIC

FUNCTIONAL SUPERVISOR: LOURDES DAVID
CALCULATED-DESIGNED BY: LEOPOLDO G. BONGATO
CHECKED BY: FLORANTE P. PEREZ
REVISED BY
DATE REVISED

LAST REVISION 01-23-10
DATE PLOTTED => 04-FEB-2010
TIME PLOTTED => 13:29

Dist	COUNTY	ROUTE	POST MILES TOTAL PROJECT	SHEET No.	TOTAL SHEETS
04	CC	680	0.0/12.8	337	504

REGISTERED CIVIL ENGINEER — DATE 1/25/10

2-1-10
PLANS APPROVAL DATE

REGISTERED PROFESSIONAL ENGINEER — Florante P. Perez — No. 41030 — Exp. 3-31-10 — CIVIL — STATE OF CALIFORNIA

THE STATE OF CALIFORNIA OR ITS OFFICERS OR AGENTS SHALL NOT BE RESPONSIBLE FOR THE ACCURACY OR COMPLETENESS OF SCANNED COPIES OF THIS PLAN SHEET.

FOR ACCURATE RIGHT OF WAY DATA,
CONTACT RIGHT OF WAY ENGINEERING
AT THE DISTRICT OFFICE.

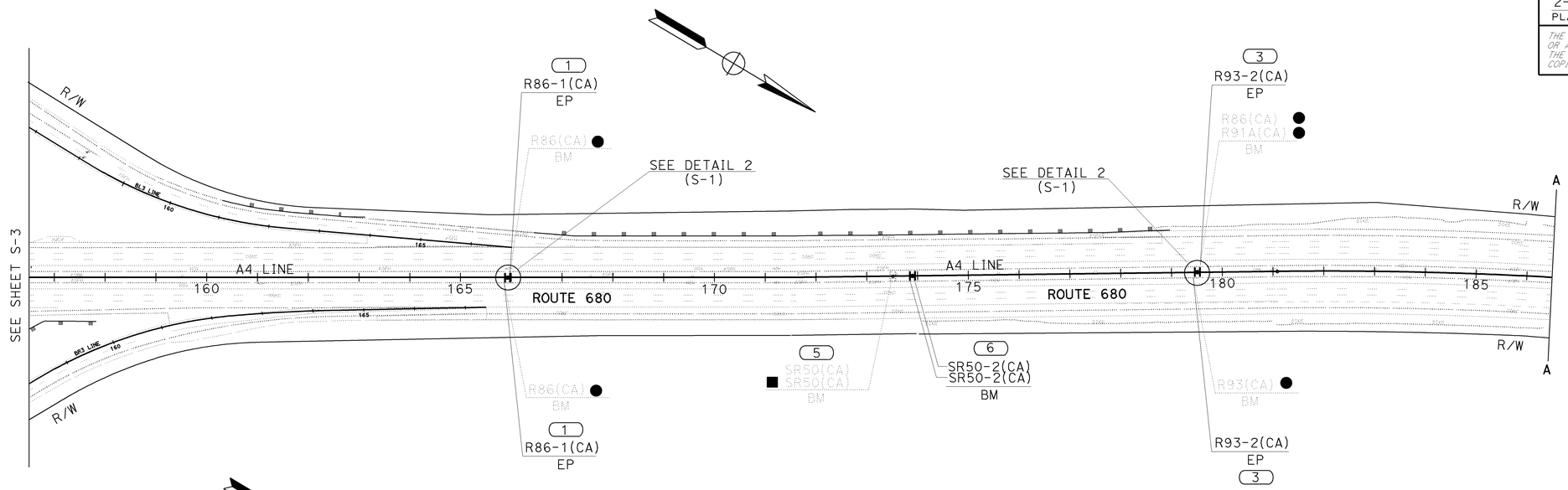

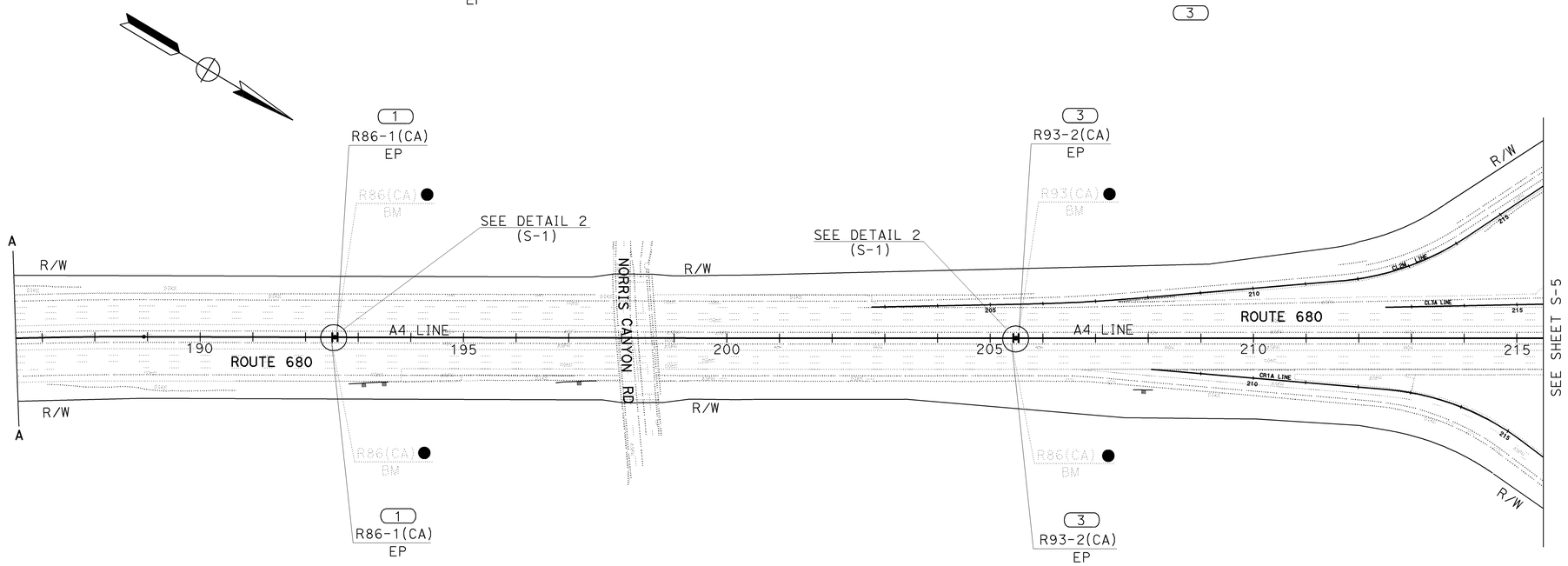

SIGN PLAN

NO SCALE

FOR NOTES, ABBREVIATIONS
AND LEGEND, SEE SHEET S-1

THIS PLAN ACCURATE FOR
SIGN WORK ONLY

S-4

STATE OF CALIFORNIA - DEPARTMENT OF TRANSPORTATION
Caltrans
TRAFFIC

FUNCTIONAL SUPERVISOR: LOURDES DAVID
CALCULATED-DESIGNED BY: LEOPOLDO G. BONGATO
CHECKED BY: FLORANTE P. PEREZ
REVISED BY
DATE REVISED

LAST REVISION 01-23-10 | DATE PLOTTED => 04-FEB-2010 | TIME PLOTTED => 13:29

BORDER LAST REVISED 4/11/2008 | RELATIVE BORDER SCALE IS IN INCHES 0 1 2 3 | USERNAME => trlenard | DGN FILE => 44470uoa004.dgn | CU 04236 | EA 4470U1

Dist	COUNTY	ROUTE	POST MILES TOTAL PROJECT	SHEET No.	TOTAL SHEETS
04	CC	680	0.0/12.8	338	504

REGISTERED CIVIL ENGINEER DATE 1/25/10

2-1-10
PLANS APPROVAL DATE

REGISTERED PROFESSIONAL ENGINEER
Florante P. Perez
No. 41030
Exp. 3-31-10
CIVIL
STATE OF CALIFORNIA

THE STATE OF CALIFORNIA OR ITS OFFICERS OR AGENTS SHALL NOT BE RESPONSIBLE FOR THE ACCURACY OR COMPLETENESS OF SCANNED COPIES OF THIS PLAN SHEET.

FOR ACCURATE RIGHT OF WAY DATA, CONTACT RIGHT OF WAY ENGINEERING AT THE DISTRICT OFFICE.

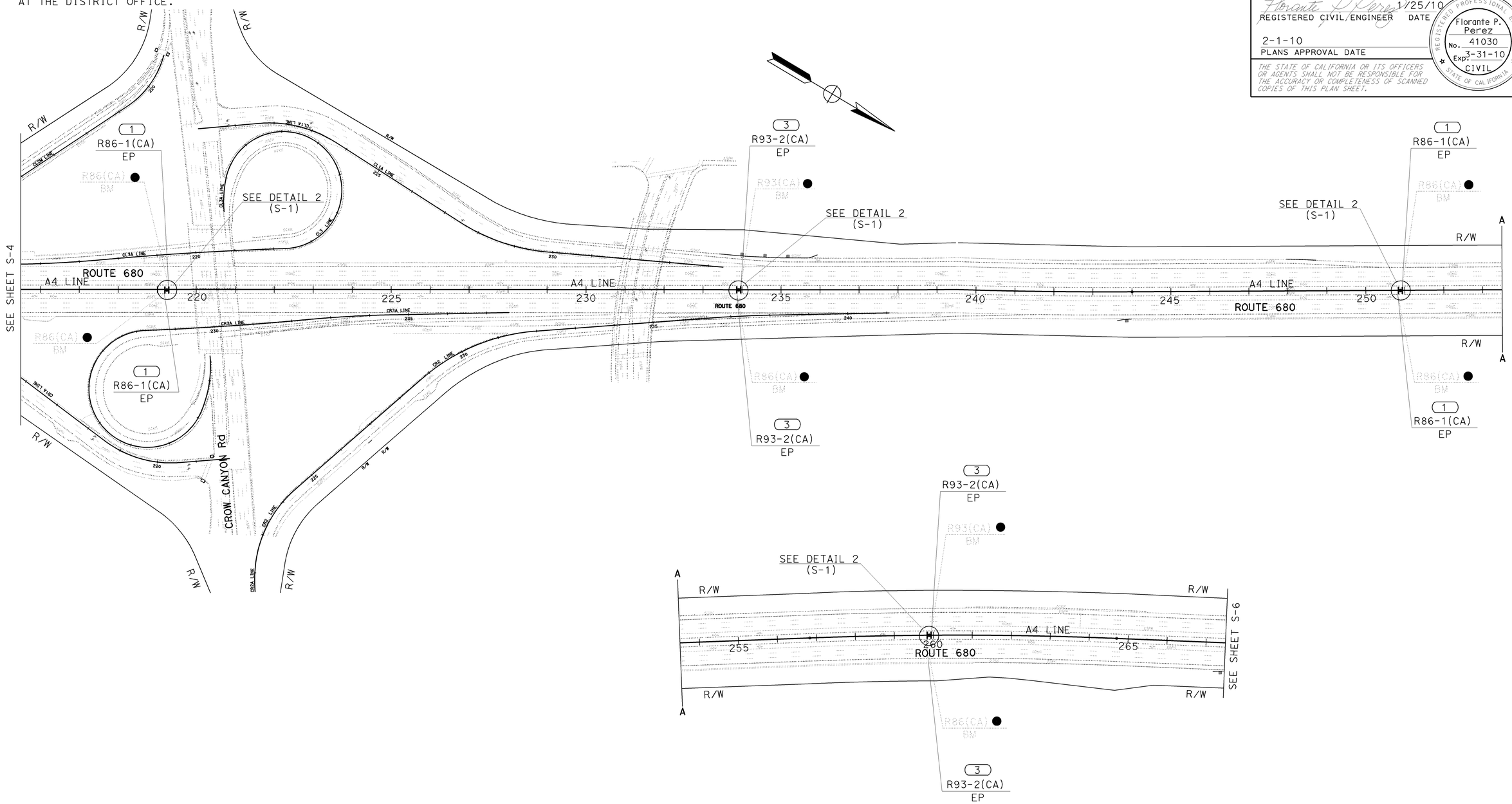

FOR NOTES, ABBREVIATIONS AND LEGEND, SEE SHEET S-1

SIGN PLAN

NO SCALE

THIS PLAN ACCURATE FOR SIGN WORK ONLY

S-5

STATE OF CALIFORNIA - DEPARTMENT OF TRANSPORTATION

Caltrans

TRAFFIC

FUNCTIONAL SUPERVISOR: LOURDES DAVID

CALCULATED-DESIGNED BY: LEOPOLDO G. BONGATO

CHECKED BY: FLORANTE P. PEREZ

REVISED BY / DATE REVISED

LAST REVISION 01-23-10

DATE PLOTTED => 04-FEB-2010
TIME PLOTTED => 13:29

FOR ACCURATE RIGHT OF WAY DATA,
CONTACT RIGHT OF WAY ENGINEERING
AT THE DISTRICT OFFICE.

Dist	COUNTY	ROUTE	POST MILES TOTAL PROJECT	SHEET No.	TOTAL SHEETS
04	CC	680	0.0/12.8	339	504

REGISTERED CIVIL ENGINEER 1/25/10 DATE

2-1-10
PLANS APPROVAL DATE

REGISTERED PROFESSIONAL ENGINEER
Florante P. Perez
No. 41030
Exp. 3-31-10
CIVIL
STATE OF CALIFORNIA

THE STATE OF CALIFORNIA OR ITS OFFICERS OR AGENTS SHALL NOT BE RESPONSIBLE FOR THE ACCURACY OR COMPLETENESS OF SCANNED COPIES OF THIS PLAN SHEET.

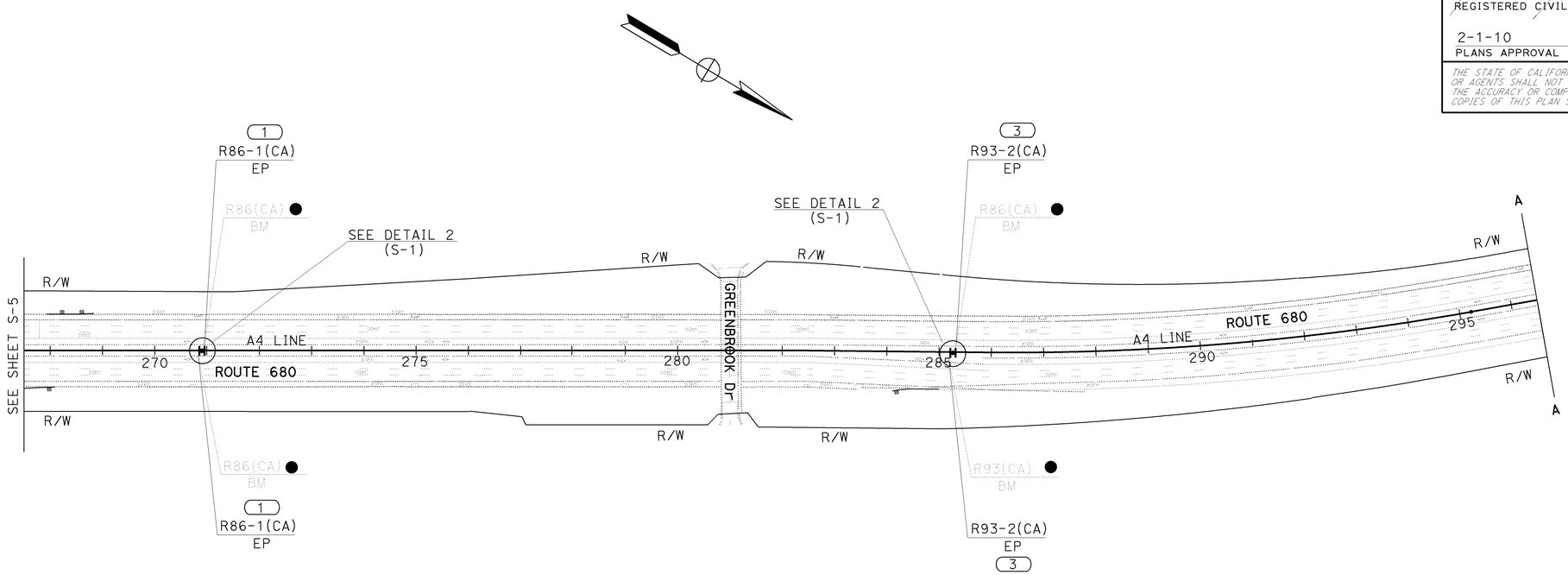

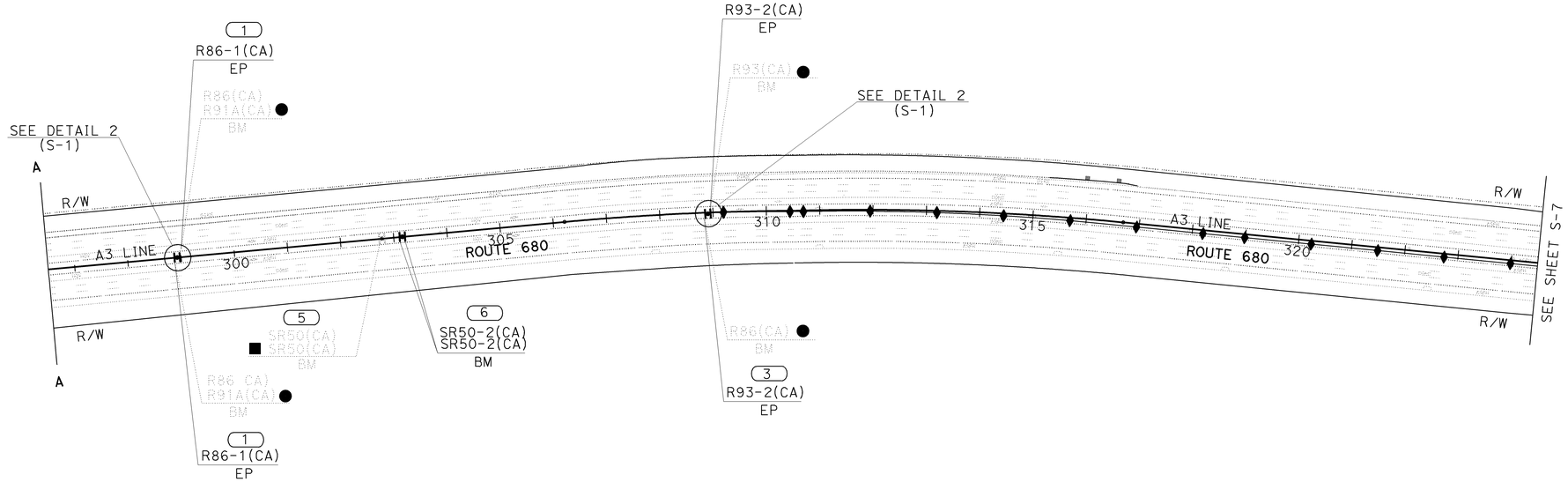

SIGN PLAN

NO SCALE

THIS PLAN ACCURATE FOR
SIGN WORK ONLY

FOR NOTES, ABBREVIATIONS
AND LEGEND, SEE SHEET S-1

S-6

STATE OF CALIFORNIA - DEPARTMENT OF TRANSPORTATION
Caltrans
TRAFFIC

FUNCTIONAL SUPERVISOR: LOURDES DAVID
CALCULATED-DESIGNED BY: LEOPOLDO G. BONGATO
CHECKED BY: FLORANTE P. PEREZ
REVISED BY
DATE REVISED

LAST REVISION 01-23-10
DATE PLOTTED => 04-FEB-2010
TIME PLOTTED => 13:29

Dist	COUNTY	ROUTE	POST MILES TOTAL PROJECT	SHEET No.	TOTAL SHEETS
04	CC	680	0.0/12.8	340	504

REGISTERED CIVIL ENGINEER 1/25/10 DATE

2-1-10
PLANS APPROVAL DATE

REGISTERED PROFESSIONAL ENGINEER Florante P. Perez No. 41030 Exp. 3-31-10 CIVIL STATE OF CALIFORNIA

THE STATE OF CALIFORNIA OR ITS OFFICERS OR AGENTS SHALL NOT BE RESPONSIBLE FOR THE ACCURACY OR COMPLETENESS OF SCANNED COPIES OF THIS PLAN SHEET.

FOR ACCURATE RIGHT OF WAY DATA,
CONTACT RIGHT OF WAY ENGINEERING
AT THE DISTRICT OFFICE.

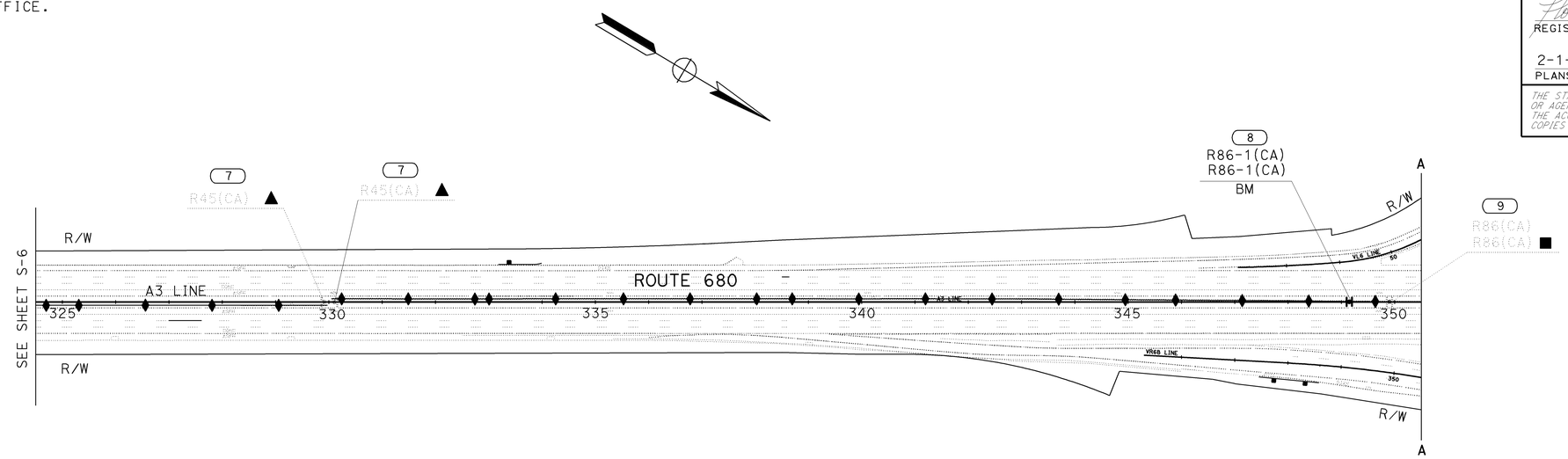

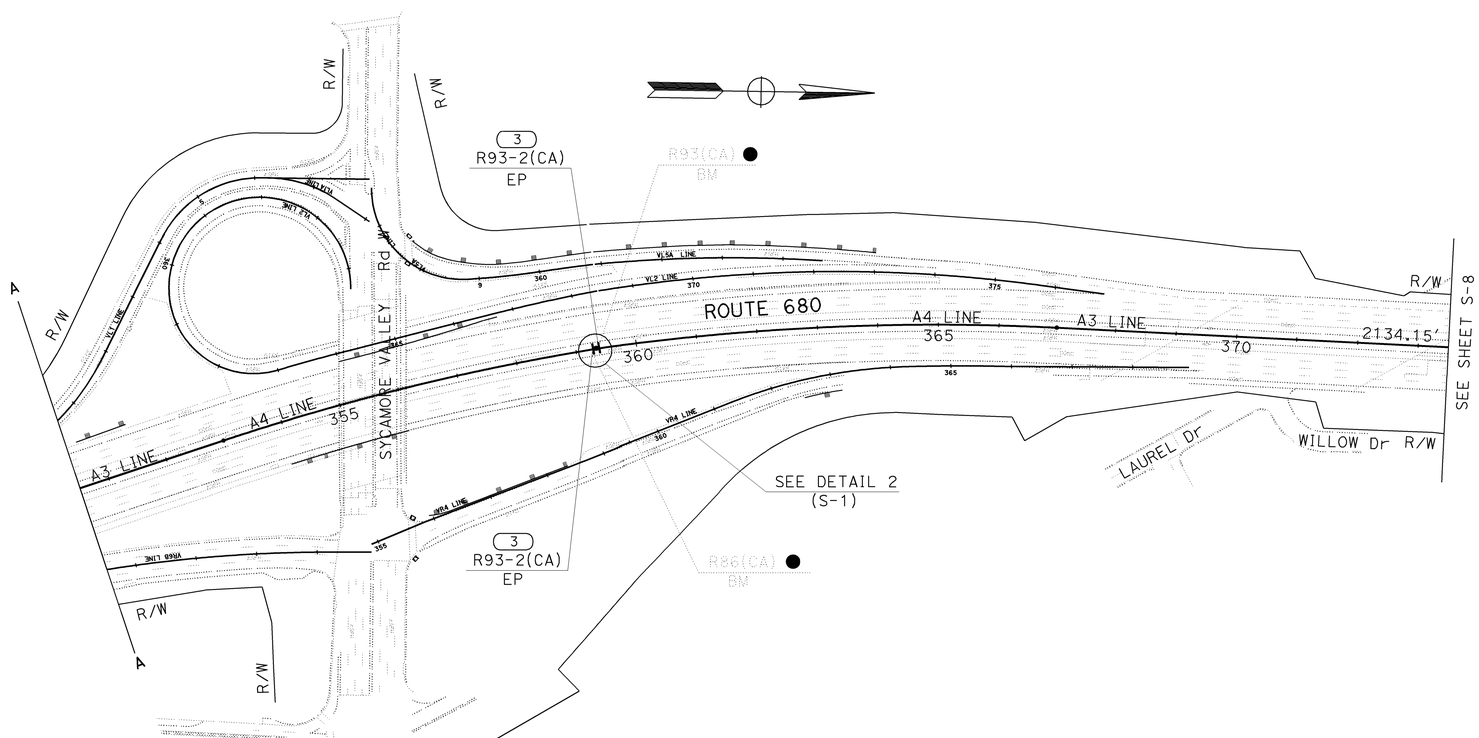

FOR NOTES, ABBREVIATIONS AND LEGEND, SEE SHEET S-1

THIS PLAN ACCURATE FOR SIGN WORK ONLY

SIGN PLAN
NO SCALE

S-7

STATE OF CALIFORNIA - DEPARTMENT OF TRANSPORTATION
Caltrans
TRAFFIC

FUNCTIONAL SUPERVISOR: LOURDES DAVID
CALCULATED-DESIGNED BY: LEOPOLDO G. BONGATO
CHECKED BY: FLORANTE P. PEREZ
REVISED BY
DATE REVISED

LAST REVISION 01-23-10
DATE PLOTTED => 04-FEB-2010
TIME PLOTTED => 13:29

FOR ACCURATE RIGHT OF WAY DATA,
CONTACT RIGHT OF WAY ENGINEERING
AT THE DISTRICT OFFICE.

Dist	COUNTY	ROUTE	POST MILES TOTAL PROJECT	SHEET No.	TOTAL SHEETS
04	CC	680	0.0/12.8	341	504

REGISTERED CIVIL ENGINEER — DATE 1/25/10

2-1-10
PLANS APPROVAL DATE

Florante P. Perez No. 41030 Exp. 3-31-10 CIVIL — REGISTERED PROFESSIONAL ENGINEER — STATE OF CALIFORNIA

THE STATE OF CALIFORNIA OR ITS OFFICERS OR AGENTS SHALL NOT BE RESPONSIBLE FOR THE ACCURACY OR COMPLETENESS OF SCANNED COPIES OF THIS PLAN SHEET.

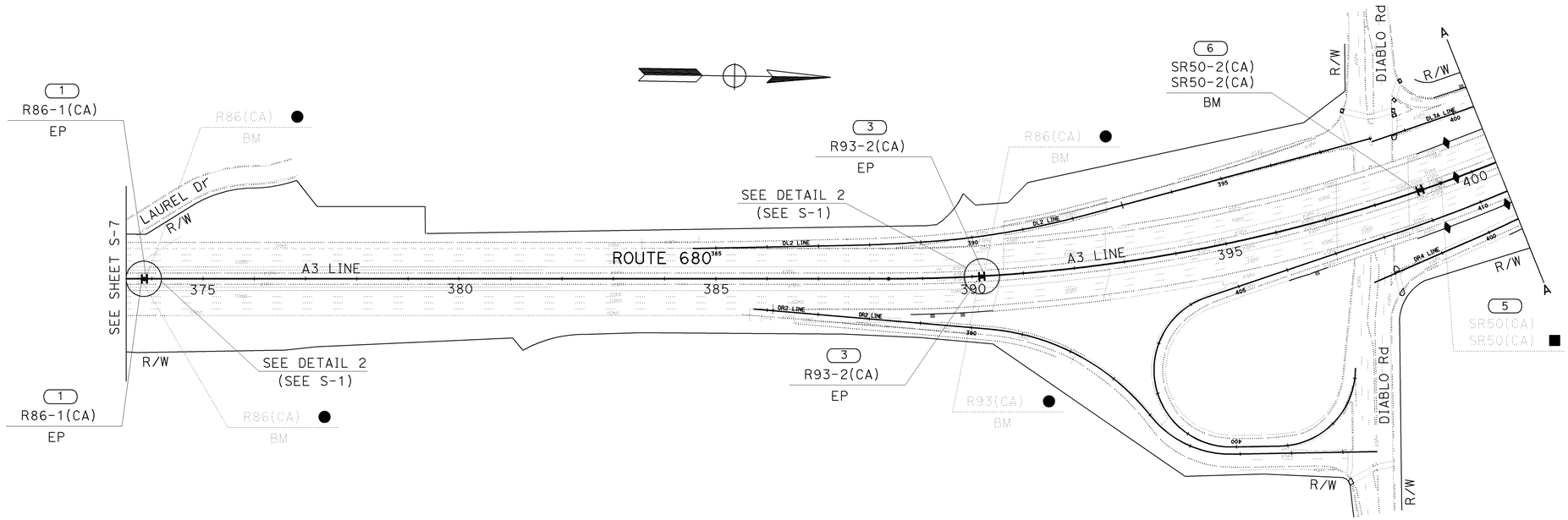

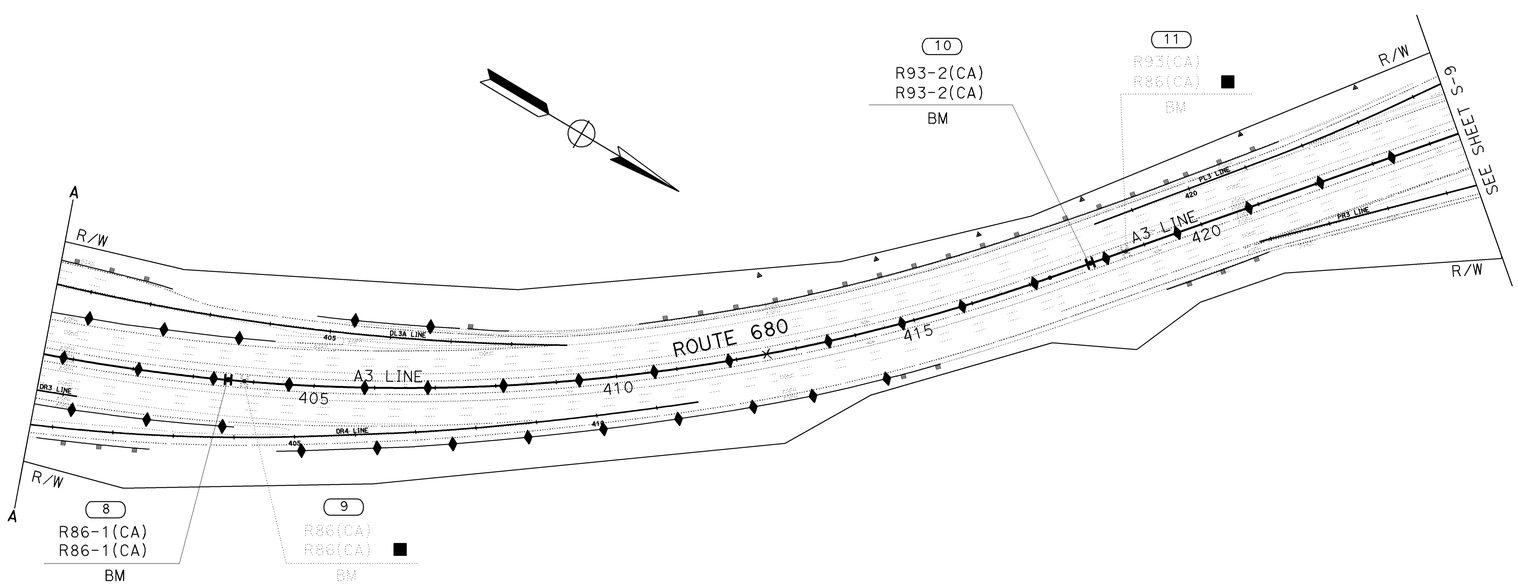

FOR NOTES, ABBREVIATIONS AND LEGEND, SEE SHEET S-1

SIGN PLAN

NO SCALE

THIS PLAN ACCURATE FOR SIGN WORK ONLY

S-8

STATE OF CALIFORNIA - DEPARTMENT OF TRANSPORTATION
Caltrans
TRAFFIC

FUNCTIONAL SUPERVISOR: LOURDES DAVID
CALCULATED-DESIGNED BY: LEOPOLDO G. BONGATO
CHECKED BY: FLORANTE P. PEREZ
REVISED BY / DATE REVISED

LAST REVISION 01-23-10
DATE PLOTTED => 04-FEB-2010
TIME PLOTTED => 13:29

BORDER LAST REVISED 4/11/2008
RELATIVE BORDER SCALE IS IN INCHES 0 1 2 3
USERNAME => trlenard
DGN FILE => 44470uoa008.dgn
CU 04236
EA 4470U1

Dist	COUNTY	ROUTE	POST MILES TOTAL PROJECT	SHEET No.	TOTAL SHEETS
04	CC	680	0.0/12.8	342	504

REGISTERED CIVIL ENGINEER 1/25/10 DATE

2-1-10
PLANS APPROVAL DATE

REGISTERED PROFESSIONAL ENGINEER Florante P. Perez No. 41030 Exp. 3-31-10 CIVIL STATE OF CALIFORNIA

THE STATE OF CALIFORNIA OR ITS OFFICERS OR AGENTS SHALL NOT BE RESPONSIBLE FOR THE ACCURACY OR COMPLETENESS OF SCANNED COPIES OF THIS PLAN SHEET.

FOR ACCURATE RIGHT OF WAY DATA,
CONTACT RIGHT OF WAY ENGINEERING
AT THE DISTRICT OFFICE.

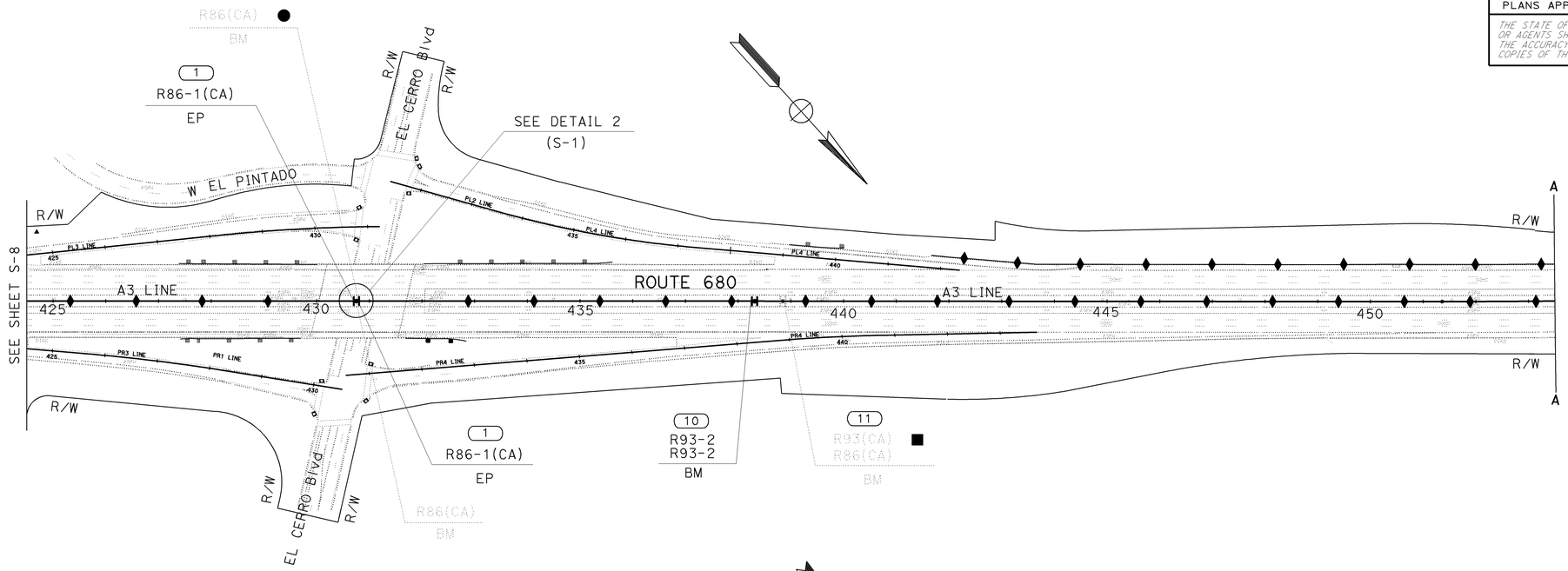

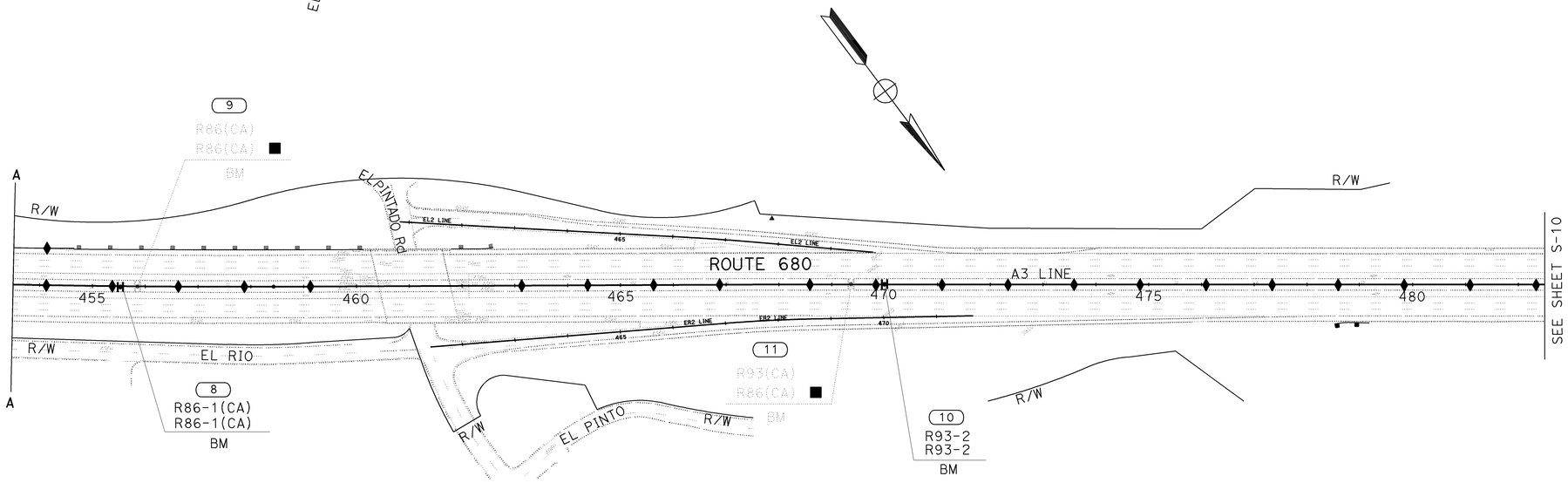

FOR NOTES, ABBREVIATIONS AND LEGEND, SEE SHEET S-1

THIS PLAN ACCURATE FOR SIGN WORK ONLY

SIGN PLAN
NO SCALE

S-9

STATE OF CALIFORNIA - DEPARTMENT OF TRANSPORTATION
Caltrans
TRAFFIC

FUNCTIONAL SUPERVISOR: LOURDES DAVID
CALCULATED-DESIGNED BY: LEOPOLDO G. BONGATO
CHECKED BY: FLORANTE P. PEREZ
REVISED BY
DATE REVISED

LAST REVISION 01-23-10
DATE PLOTTED => 04-FEB-2010
TIME PLOTTED => 13:29

Dist	COUNTY	ROUTE	POST MILES TOTAL PROJECT	SHEET No.	TOTAL SHEETS
04	CC	680	0.0/12.8	343	504

REGISTERED CIVIL ENGINEER 1/25/10 DATE

2-1-10
PLANS APPROVAL DATE

Florante P. Perez
No. 41030
Exp. 3-31-10
CIVIL
REGISTERED PROFESSIONAL ENGINEER
STATE OF CALIFORNIA

THE STATE OF CALIFORNIA OR ITS OFFICERS OR AGENTS SHALL NOT BE RESPONSIBLE FOR THE ACCURACY OR COMPLETENESS OF SCANNED COPIES OF THIS PLAN SHEET.

FOR ACCURATE RIGHT OF WAY DATA,
CONTACT RIGHT OF WAY ENGINEERING
AT THE DISTRICT OFFICE.

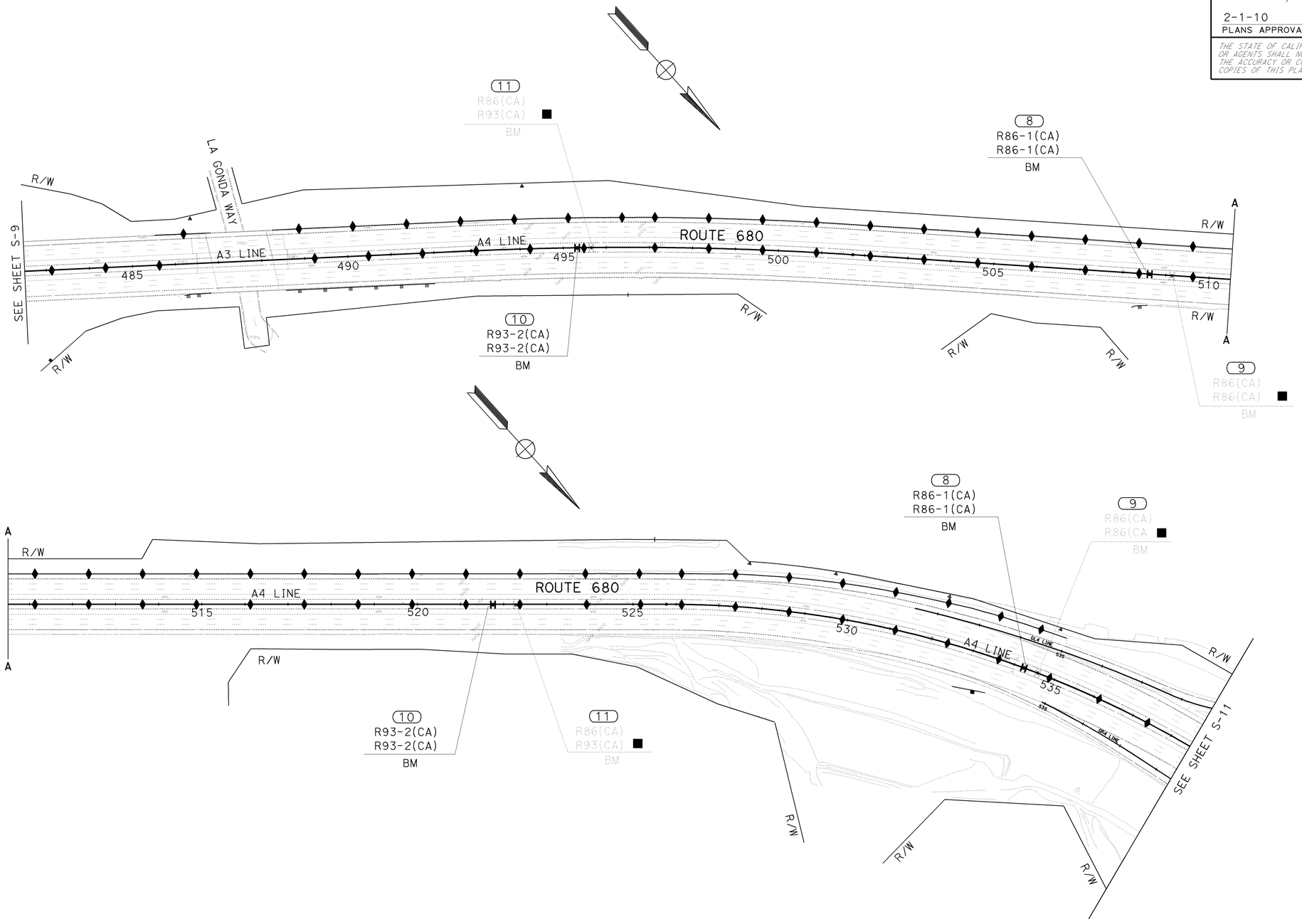

FOR NOTES, ABBREVIATIONS AND LEGEND, SEE SHEET S-1

THIS PLAN ACCURATE FOR SIGN WORK ONLY

SIGN PLAN
NO SCALE

S-10

STATE OF CALIFORNIA - DEPARTMENT OF TRANSPORTATION
Caltrans
TRAFFIC

FUNCTIONAL SUPERVISOR: LOURDES DAVID
CALCULATED-DESIGNED BY: LEOPOLDO G. BONGATO
CHECKED BY: FLORANTE P. PEREZ
REVISED BY
DATE REVISED

LAST REVISION 01-23-10
DATE PLOTTED => 04-FEB-2010
TIME PLOTTED => 13:29

BORDER LAST REVISED 4/11/2008
RELATIVE BORDER SCALE IS IN INCHES 0 1 2 3
USERNAME => trlenard
DGN FILE => 44470uoa010.dgn
CU 04236
EA 4470U1

Dist	COUNTY	ROUTE	POST MILES TOTAL PROJECT	SHEET No.	TOTAL SHEETS
04	CC	680	0.0/12.8	344	504

REGISTERED CIVIL ENGINEER 1/25/10 DATE

2-1-10
PLANS APPROVAL DATE

REGISTERED PROFESSIONAL ENGINEER
Florante P. Perez
No. 41030
Exp. 3-31-10
CIVIL
STATE OF CALIFORNIA

THE STATE OF CALIFORNIA OR ITS OFFICERS OR AGENTS SHALL NOT BE RESPONSIBLE FOR THE ACCURACY OR COMPLETENESS OF SCANNED COPIES OF THIS PLAN SHEET.

FOR ACCURATE RIGHT OF WAY DATA,
CONTACT RIGHT OF WAY ENGINEERING
AT THE DISTRICT OFFICE.

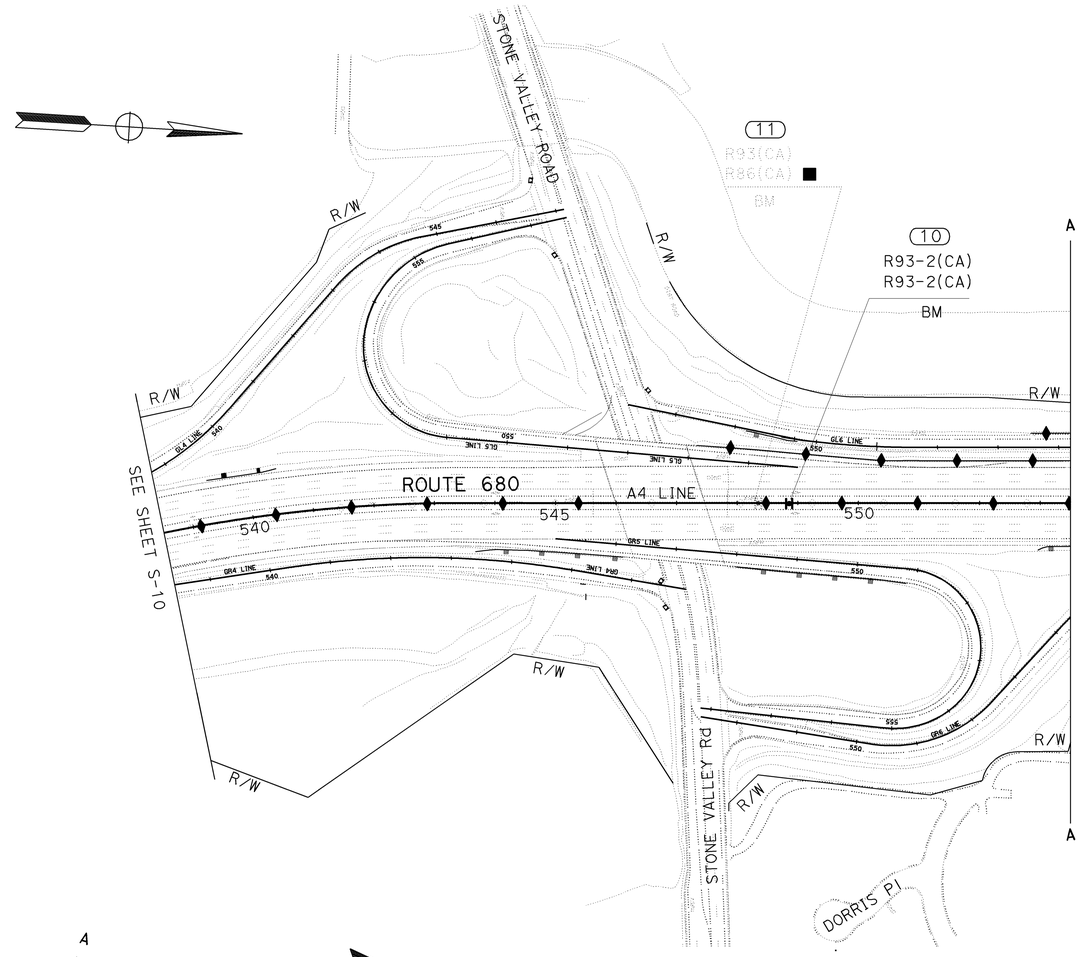

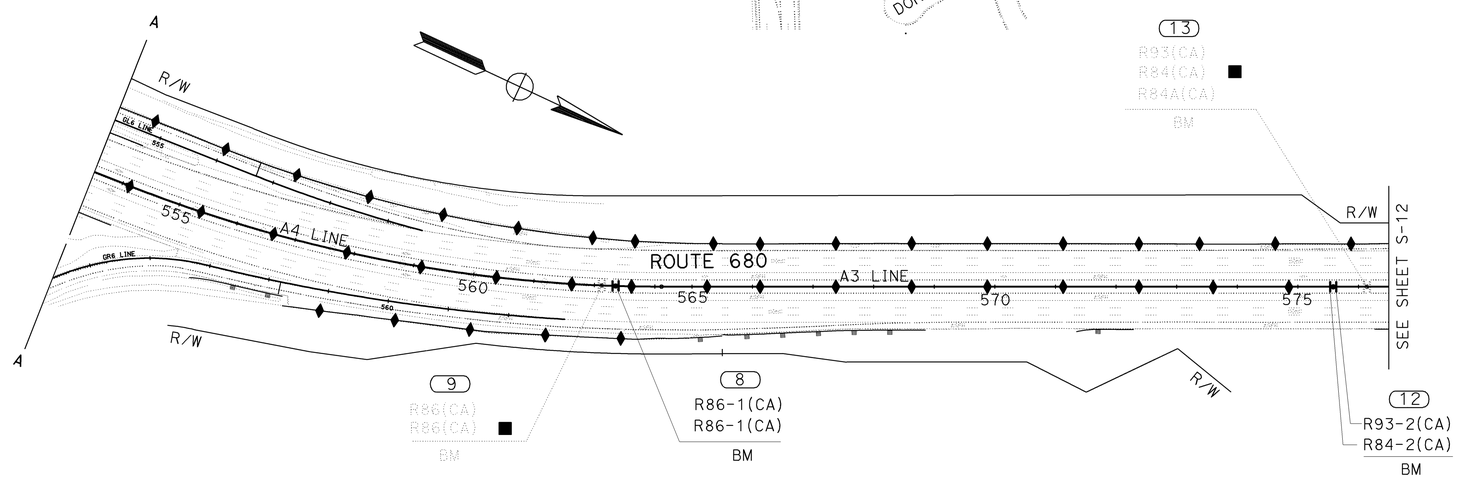

FOR NOTES, ABBREVIATIONS
AND LEGEND, SEE SHEET S-1

THIS PLAN ACCURATE FOR
SIGN WORK ONLY

SIGN PLAN
NO SCALE

S-11

STATE OF CALIFORNIA - DEPARTMENT OF TRANSPORTATION
Caltrans
TRAFFIC

FUNCTIONAL SUPERVISOR: LOURDES DAVID
CALCULATED-DESIGNED BY: LEOPOLDO G. BONGATO
CHECKED BY: FLORANTE P. PEREZ
REVISED BY
DATE REVISED

LAST REVISION 01-23-10
DATE PLOTTED => 04-FEB-2010
TIME PLOTTED => 13:29

Dist	COUNTY	ROUTE	POST MILES TOTAL PROJECT	SHEET No.	TOTAL SHEETS
04	CC	680	0.0/R12.8	345	504

REGISTERED CIVIL ENGINEER 1/25/10 DATE

2-1-10
PLANS APPROVAL DATE

REGISTERED PROFESSIONAL ENGINEER Florante P. Perez No. 41030 Exp. 3-31-10 CIVIL STATE OF CALIFORNIA

THE STATE OF CALIFORNIA OR ITS OFFICERS OR AGENTS SHALL NOT BE RESPONSIBLE FOR THE ACCURACY OR COMPLETENESS OF SCANNED COPIES OF THIS PLAN SHEET.

FOR ACCURATE RIGHT OF WAY DATA, CONTACT RIGHT OF WAY ENGINEERING AT THE DISTRICT OFFICE.

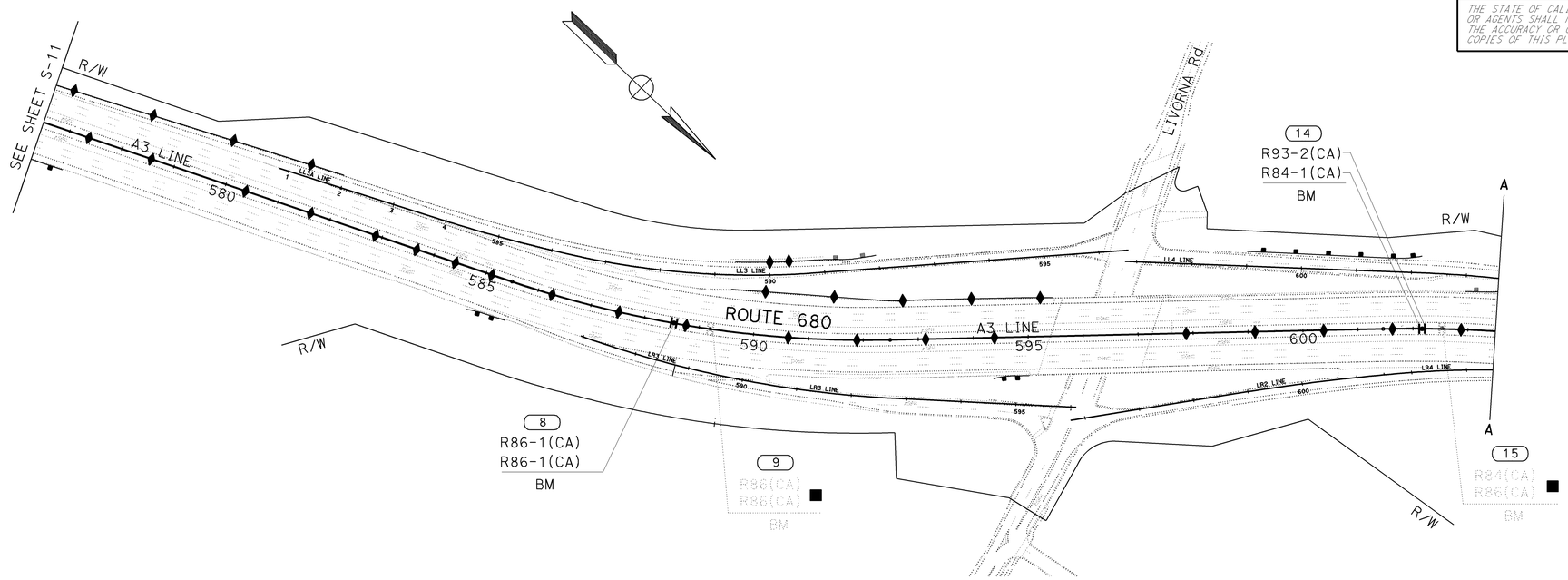

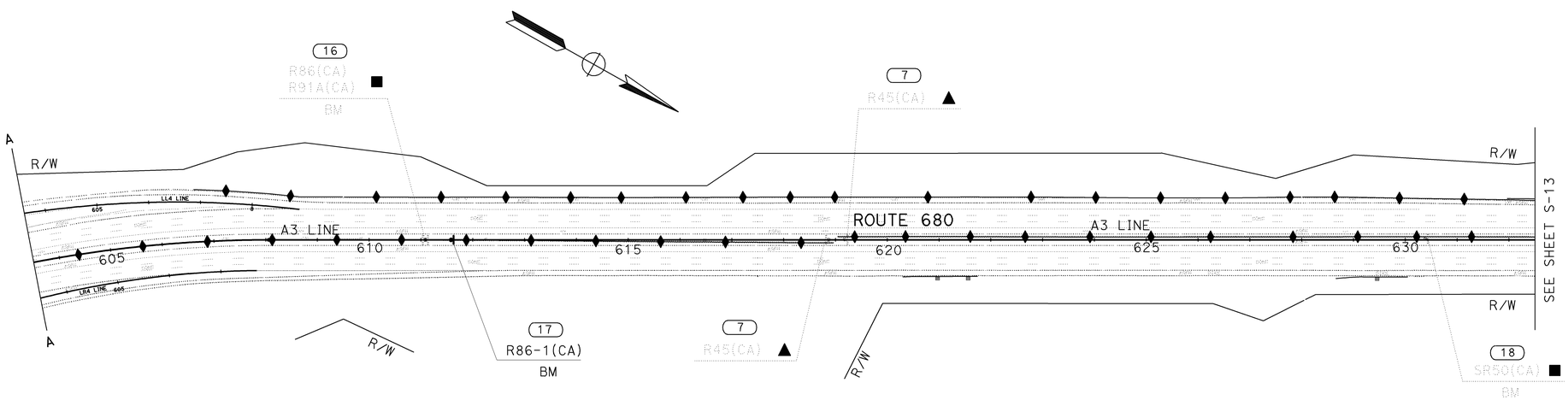

FOR NOTES, ABBREVIATIONS AND LEGEND, SEE SHEET S-1

SIGN PLAN
NO SCALE

THIS PLAN ACCURATE FOR SIGN WORK ONLY

S-12

STATE OF CALIFORNIA - DEPARTMENT OF TRANSPORTATION
Caltrans
TRAFFIC

FUNCTIONAL SUPERVISOR: LOURDES DAVID
CALCULATED-DESIGNED BY: LEOPOLDO G. BONGATO
CHECKED BY: FLORANTE P. PEREZ
REVISED BY
DATE REVISED

LAST REVISION 01-23-10
DATE PLOTTED => 04-FEB-2010
TIME PLOTTED => 13:24

FOR ACCURATE RIGHT OF WAY DATA,
CONTACT RIGHT OF WAY ENGINEERING
AT THE DISTRICT OFFICE.

Dist	COUNTY	ROUTE	POST MILES TOTAL PROJECT	SHEET No.	TOTAL SHEETS
04	CC	680	0.0/R12.8	346	504

Florante P. Perez 1/25/10
REGISTERED CIVIL ENGINEER DATE

2-1-10
PLANS APPROVAL DATE

REGISTERED PROFESSIONAL ENGINEER
Florante P. Perez
No. 41030
Exp. 3-31-10
CIVIL
STATE OF CALIFORNIA

THE STATE OF CALIFORNIA OR ITS OFFICERS OR AGENTS SHALL NOT BE RESPONSIBLE FOR THE ACCURACY OR COMPLETENESS OF SCANNED COPIES OF THIS PLAN SHEET.

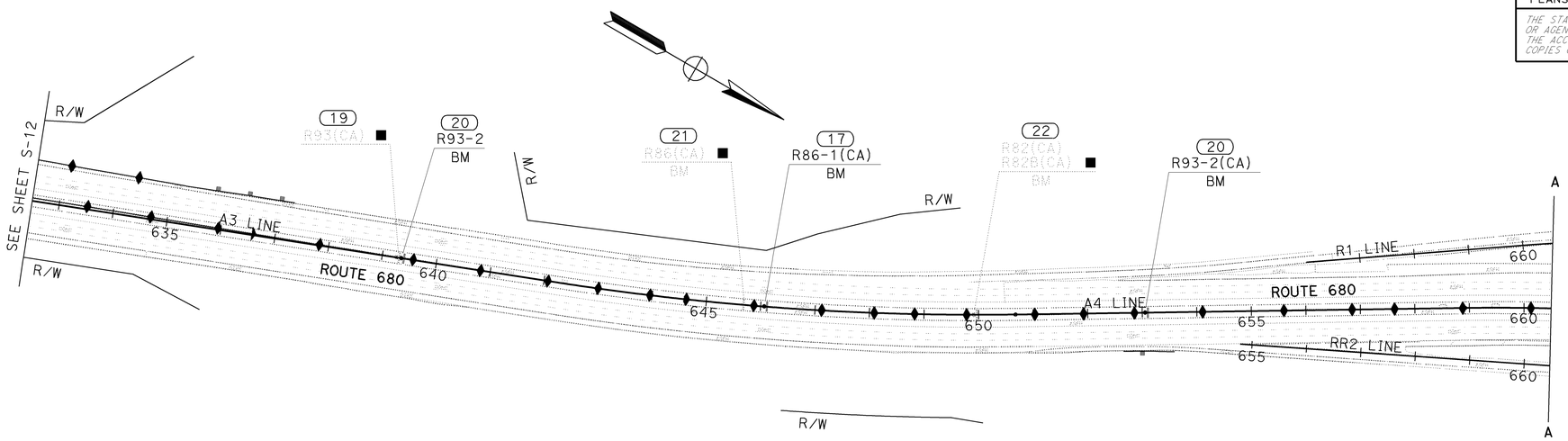

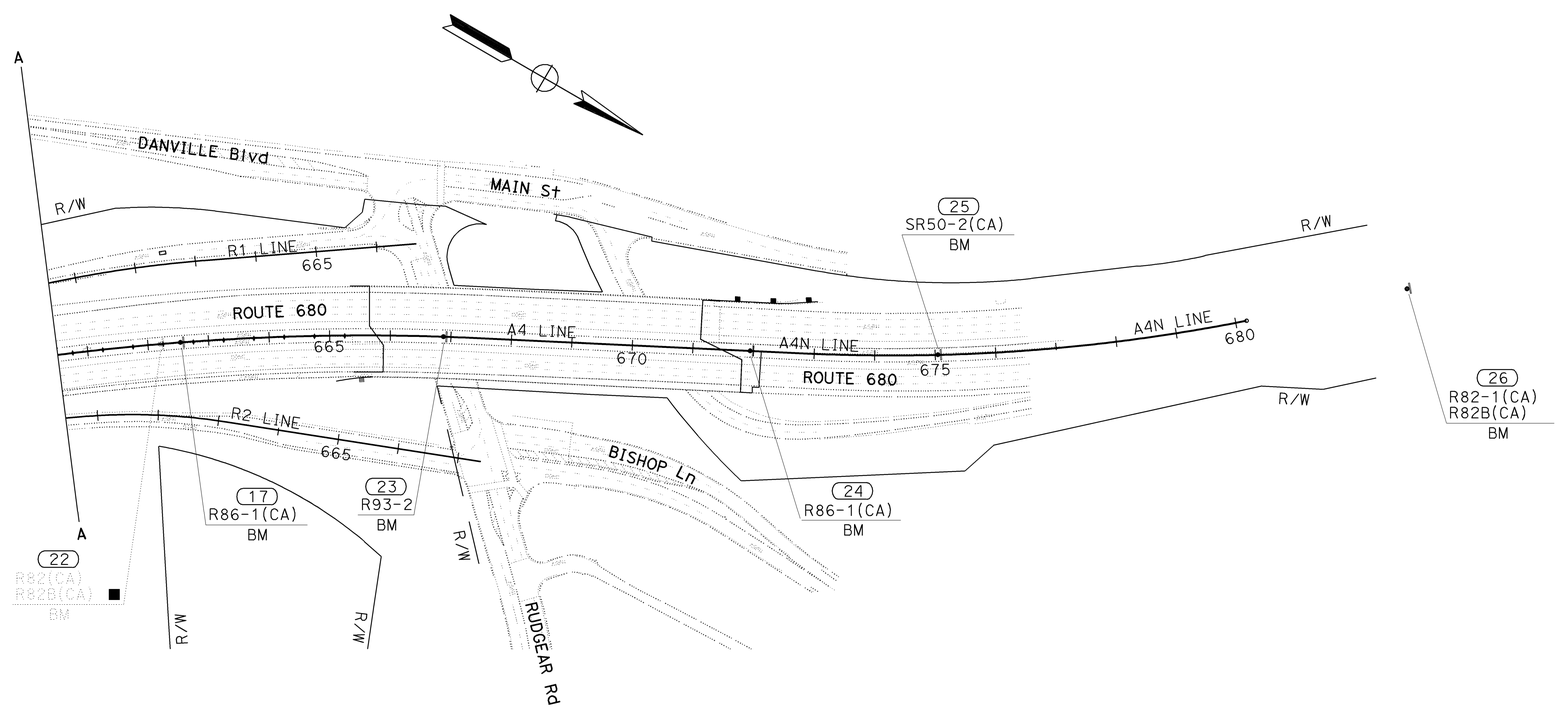

FOR NOTES, ABBREVIATIONS
AND LEGEND, SEE SHEET S-1

THIS PLAN ACCURATE FOR
SIGN WORK ONLY

SIGN PLAN
NO SCALE

S-13

STATE OF CALIFORNIA - DEPARTMENT OF TRANSPORTATION
Caltrans
TRAFFIC

FUNCTIONAL SUPERVISOR: LOURDES DAVID
CALCULATED-DESIGNED BY: LEOPOLDO G. BONGATO
CHECKED BY: FLORANTE P. PEREZ
REVISED BY
DATE REVISED

LAST REVISION DATE PLOTTED => 04-FEB-2010
01-21-10 TIME PLOTTED => 13:24

Dist	COUNTY	ROUTE	POST MILES TOTAL PROJECT	SHEET No.	TOTAL SHEETS
04	CC	680	0.0/R12.8	347	504

Florante P. Perez 1/29/09
REGISTERED CIVIL ENGINEER DATE

2-1-10
PLANS APPROVAL DATE

REGISTERED PROFESSIONAL ENGINEER Florante P. Perez No. 41030 Exp. 3-31-10 CIVIL STATE OF CALIFORNIA

THE STATE OF CALIFORNIA OR ITS OFFICERS OR AGENTS SHALL NOT BE RESPONSIBLE FOR THE ACCURACY OR COMPLETENESS OF SCANNED COPIES OF THIS PLAN SHEET.

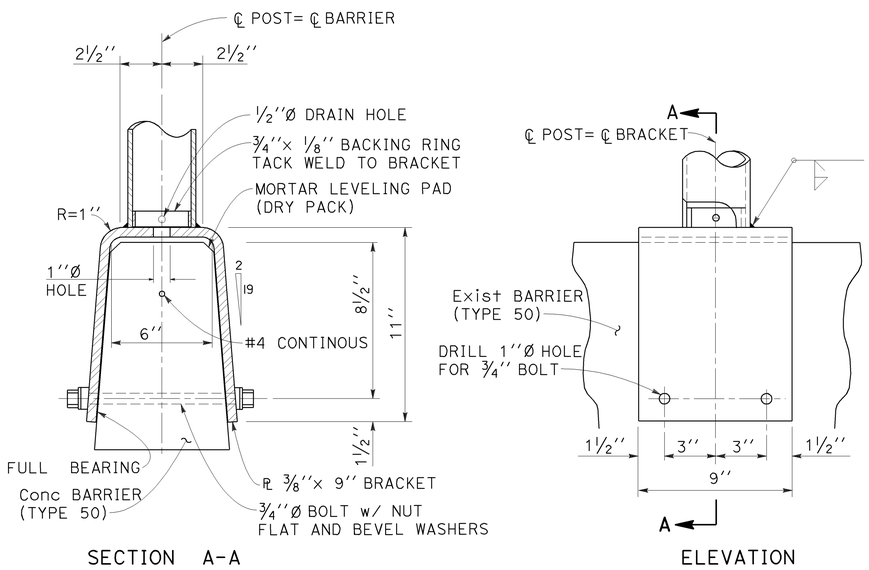

ALTERNATIVE BASE PLATE AND ANCHORAGE DETAILS
(FOR TYPE 50 CONCRETE BARRIER)

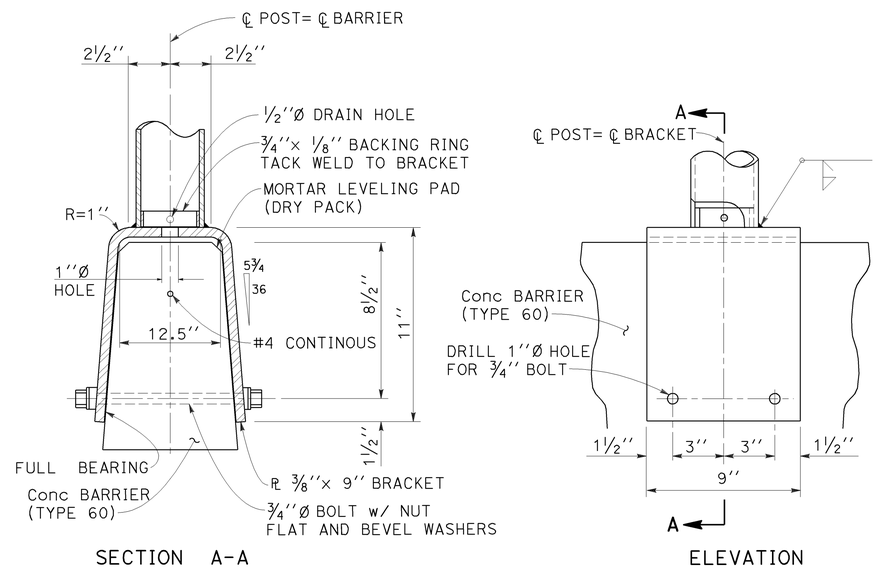

ALTERNATIVE BASE PLATE AND ANCHORAGE DETAILS
(FOR TYPE 60 CONCRETE BARRIER)

NOTES

1. ALL BOLTS SHALL HAVE A WASHER UNDER THE NUT. BOLTS THROUGH POST SHALL BE ½'' DIAMETER. BOLTS THROUGH SIGN PANEL AND BRACE SHALL BE ⅜'' DIAMETER. REAM HOLES IN SIGN AS REQUIRED.
2. ALL STEEL TO BE GALVANIZED.
3. ALL SIGN PANELS ARE STATE FURNISHED SINGLE SHEET PANEL.
4. FOR LOCATION OF SIGNS SEE "SIGN PLANS"
5. WASHER ASSEMBLY INCLUDES DOUBLE NUTS OR ONE NUT, FLAT WASHER AND LOCK WASHER.
6. BACK BRACES ARE NOT REQUIRED ON BACK TO BACK INSTALLATION, EXCEPT WHERE SHOWN.
7. EDGE OF SIGN PANEL SHALL BE SKEWED TO CLEAR EDGES OF CONCRETE BARRIERS.

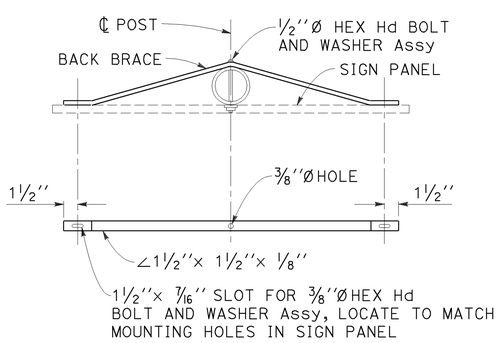

BACK BRACE DETAIL

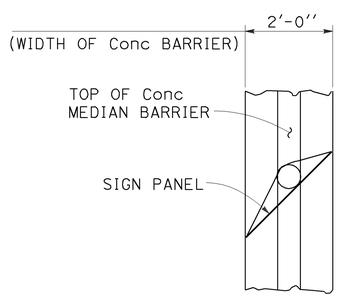

SKEW SIGN PANEL INSTALLATION DETAIL

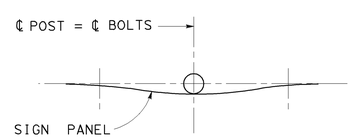

PLAN
BASE PLATE DETAILS

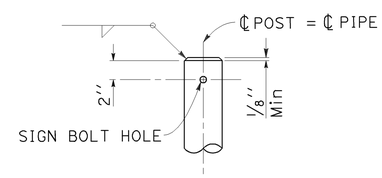

TOP OF POST DETAIL

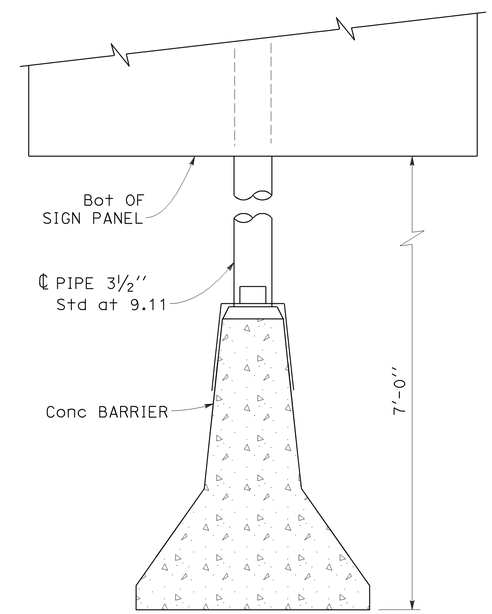

SIGN POST

MEDIAN BARRIER MOUNTED SIGN DETAILS
NO SCALE

SD-1

REVISED BY	DATE REVISED
PAULINO MAGLASANG	FLORANTE PEREZ
CALCULATED-DESIGNED BY	CHECKED BY
FUNCTIONAL SUPERVISOR	LOURDES DAVID

STATE OF CALIFORNIA - DEPARTMENT OF TRANSPORTATION
Caltrans®
DESIGN

LAST REVISION 01-21-10 | DATE PLOTTED => 04-FEB-2010 | TIME PLOTTED => 13:25

Dist	COUNTY	ROUTE	POST MILES TOTAL PROJECT	SHEET No.	TOTAL SHEETS
04	CC	680	0.0/R12.8	348	504

REGISTERED CIVIL ENGINEER 1/29/09 DATE

2-1-10
PLANS APPROVAL DATE

REGISTERED PROFESSIONAL ENGINEER Florante P. Perez No. 41030 Exp. 3-31-10 CIVIL STATE OF CALIFORNIA

THE STATE OF CALIFORNIA OR ITS OFFICERS OR AGENTS SHALL NOT BE RESPONSIBLE FOR THE ACCURACY OR COMPLETENESS OF SCANNED COPIES OF THIS PLAN SHEET.

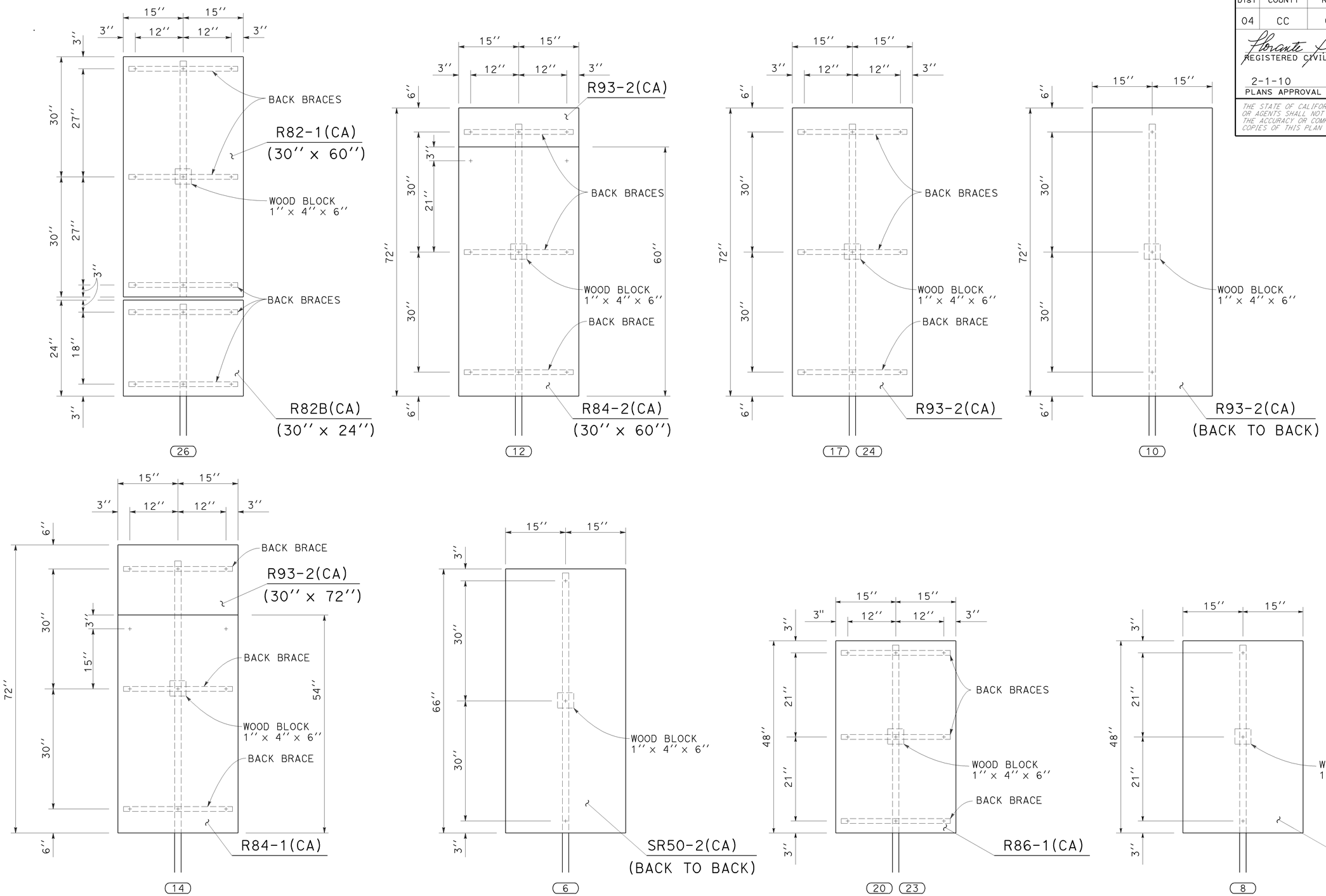

MEDIAN BARRIER MOUNTED SIGN DETAILS

NO SCALE

SD-2

STATE OF CALIFORNIA - DEPARTMENT OF TRANSPORTATION
Caltrans
DESIGN

FUNCTIONAL SUPERVISOR: LOURDES DAVID
CALCULATED-DESIGNED BY: PAULINO MAGLASANG
CHECKED BY: FLORANTE PEREZ
REVISED BY
DATE REVISED

LAST REVISION 02-12-09
DATE PLOTTED => 04-FEB-2010
TIME PLOTTED => 13:25

Dist	COUNTY	ROUTE	POST MILES TOTAL PROJECT	SHEET No.	TOTAL SHEETS
04	CC	680	0.0/R12.8	349	504

REGISTERED CIVIL ENGINEER — DATE 1/29/09

2-1-10
PLANS APPROVAL DATE

REGISTERED PROFESSIONAL ENGINEER — Florante P. Perez No. 41030 Exp. 3-31-10 CIVIL — STATE OF CALIFORNIA

THE STATE OF CALIFORNIA OR ITS OFFICERS OR AGENTS SHALL NOT BE RESPONSIBLE FOR THE ACCURACY OR COMPLETENESS OF SCANNED COPIES OF THIS PLAN SHEET.

ROADSIDE SIGN QUANTITIES

SIGN No.	SIGN CODE	PANEL SIZE (Inch x Inch)	INSTALL ROADSIDE SIGN PANEL ON EXISTING POST (EA)	REMOVE ROADSIDE SIGN (METAL POST) (EA)	METAL BARRIER MOUNTED SIGN TYPE 60 Conc BARRIER LB	RESET ROADSIDE SIGN EA	SINGLE FACE	DOUBLE FACE	BACKGROUND SHEETING COLOR	BACKGROUND RETROREFLECTIVE ASTM TYPE	LEGEND SHEETING COLOR	LEGEND RETROREFLECTIVE ASTM TYPE	PROTECTIVE FILM STANDARD	PROTECTIVE FILM PREMIUM	FURNISH SINGLE SHEET ALUMINUM SIGN 0.063" UNFRAMED SQ FT	REMARKS
1	R86-1(CA)	30 x 48	25				X		WHITE	III	BLACK	PLAIN		X	250.00	
2	R84-1(CA)	30 x 54	1				X		WHITE	III	BLACK	PLAIN		X	11.25	
3	R93-2(CA)	30 x 72	24				X		WHITE	III	BLACK	PLAIN		X	360.00	
4	R84-2(CA)	30 x 60	1				X		WHITE	III	BLACK	PLAIN		X	12.50	
5	SR50(CA)			4												
	SR50(CA)															
6	SR50-2(CA)	30 x 66			540		X		WHITE	III	BLACK	PLAIN		X	55.00	$381
	SR50-2(CA)	30 x 66					X		WHITE	III	BLACK	PLAIN		X	55.00	$381
7	R45(CA)					6										
8	R86-1(CA)	30 x 48			1050		X		WHITE	III	BLACK	PLAIN		X	70.00	
	R86-1(CA)	30 x 48					X		WHITE	III	BLACK	PLAIN		X	70.00	
9	R86(CA)			7												
	R86(CA)															
10	R93-2(CA)	30 x 72			130		X		WHITE	III	BLACK	PLAIN		X	90.00	
	R93-2(CA)	30 x 72					X		WHITE	III	BLACK	PLAIN		X	90.00	
11	R93(CA)			6												
	R86(CA)															
12	R84-2(CA)	30 x 60					X		WHITE	III	BLACK	PLAIN		X	12.50	½ MILE
	R93-2(CA)	30 x 72					X		WHITE	III	BLACK	PLAIN		X	15.00	
13	R93(CA)			1												
	R84(CA)															
	R84A(CA)															
14	R93-2(CA)	30 x 72			135		X		WHITE	III	BLACK	PLAIN		X	15.00	
	R84-1(CA)	30 x 54					X		WHITE	III	BLACK	PLAIN		X	11.25	
15	R84(CA)			1												
	R86(CA)															
16	R86(CA)			1												
	R91A(CA)															
17	R86-1(CA)	30 x 48			330		X		WHITE	III	BLACK	PLAIN		X	30.00	
18	SR50(CA)			1												
19	R93(CA)			1												
20	R93-2(CA)	30 x 72			312		X		WHITE	III	BLACK	PLAIN		X	30.00	
21	R86(CA)			1												
22	R882(CA)			2												
	R82B(CA)															
23	R93-2(CA)	30 x 72			160		X		WHITE	III	BLACK	PLAIN		X	15.00	
24	R86-1(CA)	30 x 48			119		X		WHITE	III	BLACK	PLAIN		X	10.00	
25	SR50-2(CA)	30 x 66			151		X		WHITE	III	BLACK	PLAIN		X	13.75	
26	R82-1(CA)	30 x 60			122		X		WHITE	III	BLACK	PLAIN		X	12.50	½ MILE
	R82B(CA)	30 x 24					X		WHITE	III	BLACK	PLAIN		X	5.00	
TOTAL			51	25	3049	6									1233.75	

OVERHEAD SIGN QUANTITIES

SIGN	REMOVE SIGN STRUCTURE EA	REMARKS
A	1	SEE SHEET S-2

SIGN QUANTITIES

SQ-1

STATE OF CALIFORNIA - DEPARTMENT OF TRANSPORTATION
Caltrans DESIGN

FUNCTIONAL SUPERVISOR: LOURDES DAVID
CALCULATED-DESIGNED BY: PAULINO MAGLASANG
CHECKED BY: FLORANTE PEREZ
REVISED BY / DATE REVISED

LAST REVISION 01-23-10 | DATE PLOTTED => 04-FEB-2010 | TIME PLOTTED => 13:24

Dist	COUNTY	ROUTE	POST MILES TOTAL PROJECT	SHEET No.	TOTAL SHEETS
04	CC	680	0.0/R2.8	350	504

REGISTERED CIVIL ENGINEER 8/7/09 DATE

2-1-10
PLANS APPROVAL DATE

REGISTERED PROFESSIONAL ENGINEER Z. Mangat No. 44843 Exp 3-31-10 CIVIL STATE OF CALIFORNIA

THE STATE OF CALIFORNIA OR ITS OFFICERS OR AGENTS SHALL NOT BE RESPONSIBLE FOR THE ACCURACY OR COMPLETENESS OF SCANNED COPIES OF THIS PLAN SHEET.

CONCRETE PAVEMENT

SHEET No.	STATION	SLAB LENGTH = 8 LF (N) SLAB THICKNESS = 0.67' PRECAST POST-TENSION CONCRETE PAVEMENT (PPCP) No. OF SLABS						SLAB LENGTH = 8, 10, 14 LF (PCP) SLAB THICKNESS = 0.75' PRECAST CONCRETE PAVEMENT (N) No. OF SLABS																		PRECAST POST-TENSIONED CONCRETE PAVEMENT (PPCP)	PRECAST CONCRETE PAVEMENT (PCP)	LEAN CONCRETE BASE-RAPID SETTING (PPCP)	LEAN CONCRETE BASE-RAPID SETTING (PCP)
		NORTHBOUND			SOUTHBOUND			NORTHBOUND									SOUTHBOUND												
		LINE 2	LINE 3	LINE 4	LINE 2	LINE 3	LINE 4	LINE 2			LINE 3			LINE 4			LINE 2			LINE 3			LINE 4						
								8'	10'	14'	8'	10'	14'	8'	10'	14'	8'	10'	14'	8'	10'	14'	8'	10'	14'	CY			
L-1	A 1+35 TO 14+50	0	0	41	0	36	16	1	0	3	1	0	3	0	0	0	1	0	3	2	4	5	0	2	0	221.55	98.67	191.79	65.78
L-2	A 14+50 TO 44+50	0	12	191	22	168	31	2	0	0	16	2	7	0	0	0	2	0	2	10	12	2	0	0	0	1010.06	178.00	874.38	118.67
L-3	A 44+50 TO 72+50	0	0	0	12	47	0	8	1	1	7	4	2	0	0	0	4	6	13	4	14	10	0	0	0	140.55	266.00	121.67	177.33
L-4	A4 72+50 TO 102+50	0	0	0	0	0	0	12	3	0	6	3	0	0	0	0	2	5	1	2	8	2	0	0	0	0.00	136.00	0.00	90.67
L-5	A4 102+50 TO 129+00	0	0	0	0	13	0	5	2	1	6	7	4	0	0	0	2	2	1	0	3	1	0	2	1	30.97	125.33	26.81	83.56
L-6	A4 132+50 TO 147+50	0	0	0	0	0	0	0	0	0	0	0	0	3	3	2	2	2	1	1	1	0	0	0	0	0.00	50.00	0.00	33.33
L-7	A4 147+50 TO 156+50	0	0	0	0	0	0	0	0	0	0	0	0	0	2	5	0	0	0	0	0	0	0	0	0	0.00	30.00	0.00	20.00
L-8	A4 156+50 TO 171+50	0	0	0	28	0	35	0	0	0	2	0	0	9	0	3	0	0	2	0	0	0	0	5	0	150.08	69.33	129.92	46.22
L-9	A4 171+50 TO 200+50	0	0	0	0	0	68	0	0	0	0	0	0	11	4	4	1	11	12	2	16	20	2	7	4	161.99	356.00	140.23	237.33
L-10	A4 200+50 TO 215+50	0	0	0	0	0	0	0	0	0	0	0	0	4	0	0	0	1	2	0	0	0	0	2	0	0.00	30.00	0.00	20.00
L-11	A4 215+50 TO 224+50	0	0	0	0	0	0	0	0	0	0	0	0	0	0	0	0	0	0	0	0	0	0	3	0	0.00	10.00	0.00	6.67
L-12	A4 224+50 TO 239+50	0	0	0	0	0	11	0	0	0	0	0	0	0	0	0	0	0	0	0	1	2	2	3	4	26.20	46.67	22.68	31.11
L-13	A4 239+50 TO 267+50	0	0	0	0	0	0	0	0	2	2	2	0	3	0	0	1	2	8	0	0	1	0	2	14	0.00	152.67	0.00	101.78
L-14	A4 267+50 TO 296+50	0	0	0	0	13	0	0	0	0	0	0	0	1	0	3	2	2	4	0	3	3	2	2	6	30.97	111.33	26.81	74.22
L-15	A4 296+50 TO 324+50	0	0	0	0	0	0	1	0	2	3	7	5	0	0	0	3	5	3	1	1	4	0	0	0	0.00	130.00	0.00	86.67
L-16	A4 324+50 TO 338+50	52	100	0	0	13	46	4	7	8	4	6	5	1	1	0	0	4	1	1	0	0	1	0	0	502.65	154.67	435.13	103.11
L-17	A4 338+50 TO 350+50	31	63	0	37	65	40	2	2	3	2	2	7	2	3	1	3	8	2	0	8	5	0	2	1	562.20	196.00	486.68	130.67
L-18	A4 350+50 TO 359+50	19	0	0	0	8	0	1	0	3	4	8	29	0	2	2	0	3	2	0	3	0	1	2	10	64.32	290.67	55.68	193.78
L-19	A4 359+50 TO A3 373+50	0	15	8	0	13	0	1	3	18	5	4	31	0	0	0	0	3	5	1	13	20	4	7	6	85.76	502.67	74.24	335.11
L-20	A3 373+50 TO 387+50	57	85	74	0	27	15	2	2	3	3	4	11	0	9	4	4	6	11	13	14	26	1	0	1	614.61	439.33	532.05	292.89
L-21	A3 387+50 TO 396+50	0	0	0	0	0	0	1	3	1	4	5	13	1	0	1	6	1	10	4	6	28	2	1	5	0.00	372.00	0.00	248.00
SUBTOTAL																										0.00	0.00	3118.08	2496.89
TOTAL		159	275	314	99	403	262	40	23	45	65	54	117	35	24	25	33	61	83	41	107	129	15	40	52	3601.92	3745.34	5614.97	

(N) = NOT A SEPARATE PAY ITEM, FOR INFORMATION ONLY.

SUMMARY OF QUANTITIES

Q-1

STATE OF CALIFORNIA - DEPARTMENT OF TRANSPORTATION
DESIGN
FUNCTIONAL SUPERVISOR: ARVIND K. GUPTA
CALCULATED-DESIGNED BY: PETER LAC
CHECKED BY: RANJEET SINGH
REVISED BY: RS
DATE REVISED: 7/20/09

LAST REVISION 11-23-09 | DATE PLOTTED => 04-FEB-2010 | TIME PLOTTED => 13:35

Dist	COUNTY	ROUTE	POST MILES TOTAL PROJECT	SHEET No.	TOTAL SHEETS
04	CC	680	0.0/R2.8	351	504

REGISTERED CIVIL ENGINEER 8/7/09 DATE

2-1-10
PLANS APPROVAL DATE

REGISTERED PROFESSIONAL ENGINEER Z. Mangat No. 44843 Exp 3-31-10 CIVIL STATE OF CALIFORNIA

THE STATE OF CALIFORNIA OR ITS OFFICERS OR AGENTS SHALL NOT BE RESPONSIBLE FOR THE ACCURACY OR COMPLETENESS OF SCANNED COPIES OF THIS PLAN SHEET.

CONCRETE PAVEMENT

SHEET No.	STATION	JPCP (FT) THICKNESS =0.67' & 0.75' (N) LF NB LINE 4	JPCP (FT) THICKNESS =0.67' & 0.75' (N) LF SB LINE 4	JPCP (FT) THICKNESS =1.05' (N) LF NB LINE 4	JPCP (FT) THICKNESS =1.05' (N) LF SB LINE 4	JPCP CY	LEAN CONCRETE BASE THICKNESS =0.33' & 0.45' CY	LEAN CONCRETE BASE THICKNESS =0.50' CY	AGGREGATE SUBBASE THICKNESS =0.70' (CLASS 4 AS) CY	ROADWAY EXCAVATION * CY	SEAL PAVEMENT JOINTS LF	SEAL ISOLATION JOINTS LF
L-1	A 1+35 TO 14+50	0	39	985	735	814.28	5.72	382.22	535.11	1737.33	1635.69	1759.00
L-2	A 14+50 TO 44+50	0	0	1470	2044	1639.87	0.00	780.89	1093.24	3514.00	3255.69	3514.00
L-3	A 44+50 TO 72+50	90	141	1363	1106	1229.20	33.88	548.67	768.13	2579.88	2504.31	2700.00
L-4	A4 72+50 TO 102+50	272	216	1557	286	1022.73	71.57	409.56	573.38	2077.24	2163.69	2331.00
L-5	A4 102+50 TO 129+00	186	234	960	162	663.60	61.60	249.33	349.07	1323.60	1435.38	1542.00
L-6	A4 132+50 TO 147+50	0	0	0	0	0.00	0.00	0.00	0.00	0.00		
L-7	A4 147+50 TO 156+50	0	0	0	0	0.00	0.00	0.00	0.00	0.00		
L-8	A4 156+50 TO 171+50	0	0	0	0	0.00	0.00	0.00	0.00	0.00		
L-9	A4 171+50 TO 200+50	0	0	0	371	173.13	0.00	82.44	115.42	371.00	354.46	371.00
L-10	A4 200+50 TO 215+50	0	0	0	0	0.00	0.00	0.00	0.00	0.00		
L-11	A4 215+50 TO 224+50	0	0	0	0	0.00	0.00	0.00	0.00	0.00		
L-12	A4 224+50 TO 239+50	0	0	0	0	0.00	0.00	0.00	0.00	0.00		
L-13	A4 239+50 TO 267+50	151	201	0	753	468.73	51.63	167.33	234.27	921.96	1032.00	1105.00
L-14	A4 267+50 TO 296+50	408	194	138	627	557.67	88.29	170.00	238.00	1053.96	1273.85	1367.00
L-15	A4 296+50 TO 324+50	155	357	256	270	416.13	75.09	116.89	163.64	771.76	970.15	1038.00
L-16	A4 324+50 TO 338+50	128	101	655	371	555.13	33.59	228.00	319.20	1135.92	1170.46	1255.00
L-17	A4 338+50 TO 350+50	0	0	0	0	0.00	0.00	0.00	0.00	0.00		
L-18	A4 350+50 TO 359+50	0	0	0	0	0.00	0.00	0.00	0.00	0.00		
L-19	A4 359+50 TO A3 373+50	0	0	0	0	0.00	0.00	0.00	0.00	0.00		
L-20	A3 373+50 TO 387+50	0	0	0	0	0.00	0.00	0.00	0.00	0.00		
L-21	A3 387+50 TO 396+50	141	162	0	0	101.00	60.60	0.00	0.00	161.60	291.69	303.00
SUBTOTAL							481.97	3135.33	** 68.00		16087.38	17285.00
TOTAL		1531	1645	7384	6725	7641.48	3617.30		4457.47	15648.25		

(N) = NOT A SEPARATE PAY ITEM, FOR INFORMATION ONLY.
* FOR SUMMARY OF ROADWAY EXCAVATION SEE SHEET Q-7.
* * FROM SHEET Q-8

SUMMARY OF QUANTITIES

Q-2

STATE OF CALIFORNIA - DEPARTMENT OF TRANSPORTATION
Caltrans
DESIGN

FUNCTIONAL SUPERVISOR: ARVIND K. GUPTA
CALCULATED-DESIGNED BY: PETER LAC
CHECKED BY: RANJEET SINGH
REVISED BY: FY
DATE REVISED: 7/20/09

LAST REVISION 11-23-09 DATE PLOTTED => 04-FEB-2010 TIME PLOTTED => 13:35

Dist	COUNTY	ROUTE	POST MILES TOTAL PROJECT	SHEET No.	TOTAL SHEETS
04	CC	680	0.0/R2.8	352	504

Zora S. Mangat 8/7/09
REGISTERED CIVIL ENGINEER DATE

2-1-10
PLANS APPROVAL DATE

REGISTERED PROFESSIONAL ENGINEER
Z. Mangat
No. 44843
Exp. 3-31-10
CIVIL
STATE OF CALIFORNIA

THE STATE OF CALIFORNIA OR ITS OFFICERS OR AGENTS SHALL NOT BE RESPONSIBLE FOR THE ACCURACY OR COMPLETENESS OF SCANNED COPIES OF THIS PLAN SHEET.

COLD PLANE ASPHALT CONCRETE PAVEMENT

SHEET No.	STATION	LOCATION	AREA
	MAIN LINE		SQYD
L-1	A 1+35 TO 14+50	Lt & Rt	6429
L-2	A 14+50 TO 44+50	Lt & Rt	14667
L-3	A 44+50 TO A4 72+50	Lt & Rt	13762
L-4	A4 72+50 TO 102+50	Lt & Rt	13787
L-5	A4 102+50 TO 132+50	Lt & Rt	17039
L-6	A4 132+50 TO 147+50	Lt & Rt	14077
L-7	A4 147+50 TO 156+50	Lt & Rt	8496
L-8	A4 156+50 TO 171+50	Lt & Rt	11186
L-9	A4 171+50 TO 200+50	Lt & Rt	17535
L-10	A4 200+50 TO 215+50	Lt & Rt	13136
L-11	A4 215+50 TO 224+50	Lt & Rt	6011
L-12	A4 224+50 TO 239+50	Lt & Rt	12968
L-13	A4 239+50 TO 267+50	Lt & Rt	16484
L-14	A4 267+50 TO 296+50	Lt & Rt	14177
L-15	A4 296+50 TO 324+50	Lt & Rt	13689
L-16	A4 324+50 TO 338+50	Lt & Rt	3991
L-17	A4 338+50 TO 350+50	Lt & Rt	13351
L-18	A4 350+50 TO 359+50	Lt & Rt	4400
L-19	A4 359+50 TO 373+50	Lt & Rt	6480
L-20	A4 373+50 TO 387+50	Lt & Rt	7883
L-21	A4 387+50 TO 396+50	Lt & Rt	5883
L-36	A3 650+00 TO 660+50	Lt	9450
L-37	A3 660+50 TO 665+20	Lt	4230
L-37	A3 671+87 TO 673+50	Lt	1504
	SUBTOTAL		250615

COLD PLANE ASPHALT CONCRETE PAVEMENT (CONTINUED)

SHEET No.	LOCATION	COLD PLANE
	RAMPS	SQYD
L-7,8	NB ON FROM EB BOLLINGER CANYON Rd	1849
L-7,8	NB ON FROM WB BOLLINGER CANYON Rd	3769
L-6,7	NB OFF TO BOLLINGER CANYON Rd	4628
L-10,11	NB OFF TO CROW CANYON Rd	5106
L-11,12,13	NB ON FROM WB CROW CANYON Rd	4743
L-17,18	NB OFF TO SYCAMORE VALLEY Rd	4778
L-18,19	NB ON FROM SYCAMORE VALLEY Rd	2704
L-20,21	NB OFF TO DIABLO Rd	2248
L-21,22	NB ON FROM EB DIABLO Rd	2335
L-21,22	NB ON FROM WB DIABLO Rd	2040
L-23,24	NB OFF TO EL CERRO Blvd	2235
L-24	NB ON FROM EL CERRO Blvd	2093
L-26	NB ON FROM EL PINTADO Rd	1301
L-29,30,31	NB OFF TO EB STONE VALLEY Blvd	2187
L-31	NB OFF TO WB STONE VALLEY Blvd	2586
L-31,32	NB ON FROM STONE VALLEY Blvd	2513
L-34	NB OFF TO LIVORNA Rd	2747
L-34	NB ON FROM LIVORNA Rd	1427
L-36,37	NB OFF TO RUDGER Rd	3203
L-7	SB ON FROM WB BOLLINGER CANYON Rd	1910
L-6,7	SB ON FROM EB BOLLINGER CANYON Rd	2649
L-7,8	SB OFF TO BOLLINGER CANYON Rd	5549
L-10,11	SB ON FROM EB CROW CANYON Rd	2498
L-11,12	SB OFF TO WB CROW CANYON Rd	6076
L-10,11	SB ON FROM EB CROW CANYON Rd	450
L-17,18	SB ON FROM WB SYCAMORE VALLEY RD	3142
L-18,19	SB OFF TO WB SYCAMORE VALLEY Rd	5988
L-18,19	SB OFF TO WB SYCAMORE VALLEY Rd	837
L-21,22	SB OFF TO DIABLO Rd	2494
L-20,21	SB ON FROM DIABLO Rd	1510
L-24	SB ON FROM EL CERRO Blvd	2303
L-24,25	SB OFF TO EL CERRO Blvd	2181
L-26	SB OFF TO EL PINTADO Rd	1685
L-30	SB OFF TO EB STONE VALLEY Rd	2421
L-30,31,32	SB OFF TO WB STONE VALLEY Rd	2395
L-29,30	SB ON FROM STONE VALLEY Rd	1762
L-33,34	SB ON FROM LIVORNA Rd	2032
L-34,35	SB OFF TO LIVORNA Rd	2563
L-36,37	SB ON FROM RUDGEAR Rd	3416
	SUBTOTAL	108353

CRACK EXISTING PCC PAVEMENT

SHEET No.	STATION	LOCATION	LANE No.	AREA
				SQYD
L-21	A3 398+85 TO 400+50	Lt & Rt	2,3,4	1320
L-22	A3 400+50 TO 412+50	Lt & Rt	2,3,4	9600
L-23	A3 412+50 TO 424+50	Lt & Rt	2,3,4	9600
L-24	A3 424+50 TO 438+50	Lt & Rt	2,3,4	9292
L-25	A3 438+50 TO 453+50	Lt & Rt	2,3,4	11872
L-26	A3 453+50 TO 467+50	Lt & Rt	2,3,4	9952
L-27	A3 467+50 TO 496+50	Lt & Rt	2,3,4	21138
L-28	A3 496+50 TO 525+50	Lt & Rt	2,3,4	22864
L-29	A3 525+50 TO 538+50	Lt & Rt	2,3,4	10304
L-30	A3 538+50 TO 545+50	Lt & Rt	2,3,4	5568
L-31	A3 545+50 TO 553+50	Lt & Rt	2,3,4	5088
L-32	A3 553+50 TO A4 576+50	Lt & Rt	2,3,4	18064
L-33	A4 576+50 TO 589+50	Lt & Rt	2,3,4	10232
L-34	A4 589+50 TO 603+50	Lt & Rt	2,3,4	9648
L-35	A4 603+50 TO 632+50	Lt & Rt	2,3,4	22048
L-36	A4 632+00 TO 660+50	Lt & Rt	2,3,4	22400
L-37	A4 660+50 TO 665+80	Rt	2,3,4	2120
			TOTAL	201110

COLD PLANE

LOCATION	COLD PLANE
	SQYD
MAINLINE	250615
RAMPS	108353
RUDGEAR PARK AND RIDE	84
TOTAL	359052

SUMMARY OF QUANTITIES

Q-3

STATE OF CALIFORNIA - DEPARTMENT OF TRANSPORTATION
Caltrans
DESIGN

FUNCTIONAL SUPERVISOR: ARVIND K. GUPTA
CALCULATED-DESIGNED BY: HOA LAI
CHECKED BY: ZORA S. MANGAT
REVISED BY: FY
DATE REVISED: 7/20/09

LAST REVISION 11-23-09
DATE PLOTTED => 04-FEB-2010
TIME PLOTTED => 13:35

Dist	COUNTY	ROUTE	POST MILES TOTAL PROJECT	SHEET No.	TOTAL SHEETS
04	CC	680	0.0/R2.8	353	504

Zoren S. Mangat 8/7/09
REGISTERED CIVIL ENGINEER DATE

2-1-10
PLANS APPROVAL DATE

REGISTERED PROFESSIONAL ENGINEER Z. Mangat No. 44843 Exp 3-31-10 CIVIL STATE OF CALIFORNIA

THE STATE OF CALIFORNIA OR ITS OFFICERS OR AGENTS SHALL NOT BE RESPONSIBLE FOR THE ACCURACY OR COMPLETENESS OF SCANNED COPIES OF THIS PLAN SHEET.

MAINLINE HOT MIX ASPHALT

SHEET No.	STATION	LOCATION	RUBBERIZED HOT MIX ASPHALT (GAP GRADED)	HOT MIX ASPHALT (OPEN GRADED)	HOT MIX ASPHALT (TYPE A)	GEOSYNTHETIC PAVEMENT INTERLAYER	TACK COAT
			TON			SQYD	TON
		MAINLINE					
L-1	A 1+35 TO 14+50	Lt & Rt	1074.3		600.7		2.7
L-2	A 14+50 TO 44+50	Lt & Rt	2547.5		1599.8		6.1
L-3	A 44+50 TO A4 72+50	Lt & Rt	2481.7		1782.0		5.7
L-4	A4 72+50 TO 102+50	Lt & Rt	2511.6		1782.2		5.7
L-5	A4 102+50 TO 132+50	Lt & Rt	2584.4		1687.5		7.1
L-6	A4 132+50 TO 147+50	Lt & Rt	1029.5		219.5		5.9
L-7	A4 147+50 TO 156+50	Lt & Rt	612.0		118.1		3.5
L-8	A4 156+50 TO 171+50	Lt & Rt	1032.3		226.1		4.7
L-9	A4 171+50 TO 200+50	Lt & Rt	1811.9				7.3
L-10	A4 200+50 TO 215+50	Lt & Rt	1008.9		168.8		5.5
L-11	A4 215+50 TO 224+50	Lt & Rt	761.1		472.5		2.5
L-12	A4 224+50 TO 239+50	Lt & Rt	1029.5		219.4		5.4
L-13	A4 239+50 TO 267+50	Lt & Rt	2360.0		1451.3		6.9
L-14	A4 267+50 TO 296+50	Lt & Rt	2635.6		1957.6		5.9
L-15	A4 296+50 TO 324+50	Lt & Rt	2544.6		1890.0		5.7
L-16	A4 324+50 TO 338+50	Lt & Rt	1257.8		911.3		1.7
L-17	A4 338+50 TO 350+50	Lt & Rt	856.3		253.1		5.6
L-18	A4 350+50 TO 359+50	Lt & Rt	817.9		607.6		1.8
L-19	A4 359+50 TO 373+50	Lt & Rt	705.0		327.4		2.7
L-20	A4 373+50 TO 387+50	Lt & Rt	862.2				3.3
L-21	A4 387+50 TO 400+50	Lt & Rt	735.0	142.1	553.3	1091	5.2
L-22	A3 400+50 TO A4 412+50	Lt & Rt	2117.2	1411.5	2981.9	9536	20.5
L-23	A3 412+50 TO A4 424+50	Lt & Rt	2060.2	1373.5	2901.8	9600	20.5
L-24	A3 424+50 TO A4 438+50	Lt & Rt	1719.5	1146.4	2421.9	9772	18.4
L-25	A3 438+50 TO 453+50	Lt & Rt	2549.5	1699.7	3590.9	11872	24.4
L-26	A3 453+50 TO 467+50	Lt & Rt	1971.9	1314.6	2770.6	9968	20.0
L-27	A3 467+50 TO 496+50	Lt & Rt	4196.7	2797.8	5910.8	21138	42.5
L-28	A3 496+50 TO 525+50	Lt & Rt	4262.1	2841.4	6003.0	22864	45.3
L-29	A4 525+50 TO A3 538+50	Lt & Rt	2240.4	1493.6	3155.5	10304	21.8
L-30	A4 538+50 TO 545+50	Lt & Rt	1060.8	707.2	1494.1	5568	11.1
L-31	A4 545+50 TO 553+50	Lt & Rt	1048.8	699.2	1477.1	9008	10.0
L-32	A4 553+50 TO A3 576+50	Lt & Rt	3590.6	2392.7	5057.1	18056	37.1
L-33	A3 576+50 TO 589+50	Lt & Rt	2222.4	1481.6	3130.2	10232	21.3
L-34	A3 589+50 TO 603+50	Lt & Rt	1904.4	1269.6	2682.3	9648	19.3
L-35	A3 603+50 TO 632+50	Lt & Rt	4570.9	3047.3	6437.9	21648	45.4
L-36	A3 632+50 TO 660+50	Lt & Rt	4424.0	2949.0	12646.0	22400	50.8
L-37	A3 660+50 TO A4 673+50	Lt & Rt	893.0	519.2	2777.0	4240	11.8
		LANE No. 5					
L-6,7	SB A4 133+35 TO 154+95		500.6				2.2
L-8,9	SB A4 163+25 TO 178+80		421.5				1.9
L-10	SB A4 202+70 TO 208+50		171.2				0.8
L-10,11	SB A4 212+50 TO 218+67		181.3				0.8
L-12,13	SB A4 230+75 TO 250+40		436.2				1.9
L-19	SB A3 365+05 TO 368+15		90.3				0.3
L-20,21	SB A3 383+55 TO 390+65		290.6				1.0
L-16,17	SB A3 338+35 TO 349+75		346.1		672.4		1.1
L-5,6	NB A4 122+50 TO 141+87		558.1				2.5
L-7	NB 149+20 TO A4 156+50		189.9				0.8
L-9,10	NB A4 193+80 TO 210+78		472.1				2.1
L-19	NB A3 363+00 TO 367+55		121.9				0.5
L-8	NB A4 159+15 TO 165+50		100.1		114.4		0.4
L-11,12,13	NB A4 223+40 TO 241+40		396.4		453.1		1.7
L-16,17	NB A3 337+75 TO 347+25		461.5		527.5		2.0
L-21	NB A3 394+80 TO 396+88		138.0		157.8		0.5
		*SUBTOTAL	76967.3	27286.4	84191.4	206945	541.6

* = FOR TOTAL SEE HOT MIX ASPHALT SUMMARY ON Q-5

RAMPS HOT MIX ASPHALT

SHEET No.	LOCATION	RUBBERIZED HOT MIX ASPHALT (GAP GRADED)	HOT MIX ASPHALT (TYPE A)	STRESS ABSORBING MEMBRANE INTERLAYER RUBBERIZED		TACK COAT
				SCREENING HOT APPILED	ASPHALT RUBBER BINDER	
		TON				
L-7,8	NB ON FROM EB BOLLINGER Rd	177				0.8
L-7,8	NB ON FROM WB BOLLINGER CANYON Rd	362	890			1.6
L-6,7	NB OFF TO BOLLINGER CANYON Rd	448	1093			1.9
L-10,11	NB OFF TO CROW CANYON Rd	652	660			2.1
L-11,12,13	NB ON FROM WB CROW CANYON Rd	454	1120			2.0
L-17,18	NB OFF TO SYCAMORE VALLEY Rd	458	484			2.0
L-18,19	NB ON FROM SYCAMORE VALLEY Rd	260				1.1
L-20,21	NB OFF TO DIABLO Rd	216	258			0.9
L-21,22	NB ON FROM EB DIABLO Rd	259				1.0
L-21,22	NB ON FROM WB DIABLO Rd	196	234			0.9
L-23,24	NB OFF TO EL CERRO Blvd	286	454			0.9
L-24	NB ON FROM EL CERRO Blvd	200	254			0.9
L-26	NB ON FROM EL PINTADO Rd	125	158			0.5
L-29,30,31	NB OFF TO EB STONE VALLEY Rd	210	339			0.9
L-31	NB OFF TO WB STONE VALLEY Rd	248	209			1.1
L-31,32	NB ON FROM STONE VALLEY Rd	241	594			1.0
L-34	NB OFF TO LIVORNA Rd	157	144			1.1
L-34	NB ON FROM LIVORNA Rd	182	173			0.6
L-36,37	NB OFF TO RUDGEAR Rd	294	179			1.3
L-6,7	SB ON FROM WB BOLLINGER CANYON Rd	183				0.8
L-6,7	SB ON FROM EB BOLLINGER CANYON Rd	243	28			1.1
L-7,8	SB OFF TO BOLLINGER CANYON Rd	532	28			2.3
L-10,11	SB ON FROM EB CROW CANYON Rd	213	65			1.0
L-11	SB ON FROM WB CROW CANYON Rd	32	29			2.5
L-11,12	SB OFF TO CROW CANYON Rd	777	368			0.2
L-18,19	SB OFF SYCAMORE VALLEY Rd	574	687			1.3
L-18,19	SB OFF TO EB SYCAMORE VALLEY Rd	80	85			2.5
L-17,18	SB ON FROM SYCAMORE VALLEY Rd	402	721			0.3
L-21,22	SB OFF TO DIABLO Rd	319	438			1.0
L-20,21	SB ON FROM DIABLO Rd	193	245			0.6
L-24,25	SB OFF TO EL CERRO Blvd	279	472			1.0
L-24	SB ON FROM EL CERRO Blvd	303	41			0.9
L-26	SB OFF TO EL PINTADO Rd	162	159			0.7
L-31,32	SB OFF TO WB STONE VALLEY Rd	230	259			1.0
L-30	SB OFF TO EB STONE VALLEY Rd	308	2			1.0
L-29,30	SB ON FROM STONE VALLEY Rd	225	297	33	10	0.7
L-34,35	SB OFF TO LIVORNA Rd	277	70			0.8
L-33,34	SB ON FROM LIVORNA Rd	195	206	42	12	1.1
L-36,37	SB ON FROM RUDGEAR Rd	455	9			1.4
	*SUBTOTAL	11407	11452	75	22	44.8

SUMMARY OF QUANTITIES

Q-4

STATE OF CALIFORNIA - DEPARTMENT OF TRANSPORTATION
Caltrans DESIGN
FUNCTIONAL SUPERVISOR ARVIND K. GUPTA
CALCULATED-DESIGNED BY HOA LAI
CHECKED BY MANUEL FRANCISCO
REVISED BY
DATE REVISED
FY 7/20/09

LAST REVISION 12-02-09
DATE PLOTTED => 04-FEB-2010
TIME PLOTTED => 13:35

Dist	COUNTY	ROUTE	POST MILES TOTAL PROJECT	SHEET No.	TOTAL SHEETS
04	CC	680	0.0/R2.8	354	504

Zora S. Mangat 8/7/09
REGISTERED CIVIL ENGINEER DATE

2-1-10
PLANS APPROVAL DATE

REGISTERED PROFESSIONAL ENGINEER Z. Mangat No. 44843 Exp. 3-31-10 CIVIL STATE OF CALIFORNIA

THE STATE OF CALIFORNIA OR ITS OFFICERS OR AGENTS SHALL NOT BE RESPONSIBLE FOR THE ACCURACY OR COMPLETENESS OF SCANNED COPIES OF THIS PLAN SHEET.

CONCRETE BARRIER

STATION	LOCATION	REMOVE EXISTING CONCRETE BARRIER	CONCRETE BARRIER (TYPE 60)	CONCRETE BARRIER (TYPE 60C)	CONCRETE BARRIER (TYPE 60R)	CONCRETE BARRIER MARKER
		LF				EA
B 568+99 TO A 2+23	Rt	124			124	8
B 569+28 TO A 2+50	CENTER	122			122	8
A4 104+00 TO 123+00	CHP(Rt)	1900	1900			127
A4 123+05 TO 141+00	CHP(Lt)	1795	1795			120
A4 151+00 TO 152+67	CENTER	167			167	11
A4 197+42 TO 199+00	CENTER	158			158	11
A4 219+70 TO 220+26	CENTER	156			156	10
A4 280+60 TO 281+50	CENTER	90			90	6
A4 309+00 TO 330+00	CHP(Rt)	2100	2100			140
A4 330+05 TO 351+00	CHP(Lt)	2095	2095			140
A4 354+75 TO 356+50	Rt	175			175	12
A4 354+82 TO 356+50	CENTER	168			168	11
A3 399+05 TO 418+00	CENTER	1895		1895		126
A3 418+00 TO 419+50	CENTER	150	150			10
A3 419+50 TO 421+20	CENTER	170		170		11
A3 421+20 TO 429+70	CENTER	850	850			57
A3 432+05 TO 436+34	CENTER	429	429			29
A3 436+34 TO 438+33	CENTER	199		199		13
A3 438+33 TO 460+08	CENTER	2175	2175			145
A3 462+11 TO 486+50	CENTER	2439	2439			163
A3 488+60 TO 494+00	CENTER	540	540			36
A4 494+00 TO 504+00	CENTER	1000		1000		67
A4 504+00 TO 523+50	CENTER	1950	1950			130
A4 523+50 TO 544+50	CENTER	2100		2100		140
A4 544+50 TO 545+62	CENTER	112	112			7
A4 547+85 TO 548+50	CENTER	65	65			4
A4 548+50 TO 567+00	CENTER	1850		1850		123
A4 567+00 TO 570+50	CENTER	350	350			23
A3 570+50 TO 579+50	CENTER	900		900		60
A3 579+50 TO 583+75	CENTER	425	425			28
A3 583+75 TO 594+64	CENTER	1089		1089		73
A3 594+64 TO 595+01	CENTER	37	37			2
A3 597+62 TO 599+00	CENTER	138	138			9
A3 599+00 TO 609+75	CENTER	1075		1075		72
A3 609+75 TO 611+50	CENTER	175	175			12
A3 611+50 TO 613+50	CHP(Rt)	200		200		13
A3 613+50 TO 615+00	CHP(Rt)	150	150			10
A3 615+00 TO 618+96	CHP(Rt)	396		396		26
A3 619+04 TO 640+00	CHP(Lt)	2096		2096		140
A3 640+00 TO 649+00	CENTER	900		900		60
A4 649+00 TO 651+60	CENTER	260	260			17
A4 651+60 TO 660+25	CENTER	865		865		58
A4 660+25 TO 663+00	CENTER	275	275			18
A4 663+00 TO 665+39	CENTER	239		239		16
A3 398+60 TO 403+73	Rt	513	513			34
A3 404+70 TO 414+50	Rt	980	980			65
A3 399+09 TO 404+31	Lt	522	522			35
A3 405+00 TO 407+13	Lt	213	213			14
A3 441+76 TO 454+57	Lt	1281	1281			85
A3 485+54 TO 486+84	Lt	130	130			9
A4 488+27 TO 535+01	Lt	4674	4674			312
A4 549+00 TO 554+08	Lt	508	508			34
A4 555+00 TO A3 587+80	Lt	3280	3280			180
A4 589+50 TO 595+46	Lt	596	596			40
A4 606+83 TO 635+25	Lt	2842	2842			189
GL5 545+18 TO 546+88	Lt	170	170			11
GL6 553+54 TO 555+70	Lt	216	216			14
LL3 587+60 TO 590+99	Lt	339	339			10
TOTAL		50808	34674	14974	1160	3334

*GRINDING EXISTING CONCRETE PAVEMENT

STATION	LOCATION	LANE No.	AREA
			SQYD
A 1+35 TO A4 56+90	Lt & Rt	2,3,4	44440
A4 58+75 TO 99+20	Lt & Rt	2,3,4	32360
A4 101+05 TO A3 369+00	Lt & Rt	2,3,4	214360
A3 373+50 TO 390+20	Lt & Rt	2,3,4	13360
A3 393+00 TO 396+88	Lt & Rt	2,3,4	3104
TOTAL			307624

* SEE SHEET L-1

REPLACE AC SURFACING

SHEET No.	STATION	LOCATION	HMA (TYPE A) (N)	DEPTH (N)	VOLUME
			TON	LF	CY
L-2	A4 14+50 TO 44+50	Lt	65	0.35	32
L-3	A4 44+50 TO 72+50	Lt	24	0.35	12
L-4	A4 72+50 TO 102+50	Lt	10	0.35	5
L-5	A4 102+50 TO 132+50	Lt	28	0.35	14
L-6	A4 132+50 TO 147+50	Lt	23	0.35	11
L-7	A4 147+50 TO 156+50	Lt	24	0.35	12
L-8	A4 156+50 TO 171+50	Lt	56	0.35	28
L-9	A4 171+50 TO 200+50	Lt	17	0.35	9
L-10	A4 200+50 TO 215+50	Lt	38	0.35	19
L-12	A4 224+50 TO 239+50	Lt	68	0.35	33
L-14	A4 267+50 TO 296+50	Lt	129	0.35	64
L-15	A4 296+50 TO 324+50	Lt	353	0.35	174
L-17	A4 338+50 TO 350+50	Lt	19	0.35	9
L-18	A4 350+50 TO 359+50	Lt	6	0.35	3
L-21	A4 387+50 TO 396+50	Lt	24	0.35	12
TOTAL			884	5.25	437

(N) = NOT A SEPARATE PAY ITEM, FOR INFORMATION ONLY

HOT MIX ASPHALT SURFACING

LOCATION	HOT MIX ASPHALT (OPEN GRADED) (3/8'' MIX GRADE)	RUBBERIZED HOT MIX ASPHALT (GAP GRADED) (1/2'' MIX GRADE)	HOT MIX ASPHALT (TYPE A)	STRESS ABSORBING MEMBRANE INTERLAYER RUBBERIZED (ASPHALT-RUBBER SEAL COAT)		GEOSYNTHETIC PAVEMENT INTERLAYER	TACK COAT
				SCREENING HOT APPLIED	ASPHALT RUBBER BINDER		
	TON					SQYD	TON
FROM MAINLINE	27287	76967.28	84191.40			206945	541.6
FROM RAMPS		11407.00	11452.00	75	22		44.8
FROM REMOVE CONCRETE WITH HMA			2063.00				
FROM REMOVE EDGE DRAIN			3243.00				
RIDGEAR Rd PARK AND RIDE			23.00				
FROM HOT MIX DIKE			2751.00				
TOTAL	27287	88374.28	103723.40	75	22	206945	586.4

SUMMARY OF QUANTITIES

Q-5

STATE OF CALIFORNIA - DEPARTMENT OF TRANSPORTATION
Caltrans DESIGN
FUNCTIONAL SUPERVISOR ARVIND K. GUPTA
CALCULATED-DESIGNED BY HOA LAI
CHECKED BY ZORA S. MANGAT
REVISED BY FY
DATE REVISED 7/20/09

LAST REVISION 12-03-09
DATE PLOTTED => 23-FEB-2010
TIME PLOTTED => 13:24

Dist	COUNTY	ROUTE	POST MILES TOTAL PROJECT	SHEET No.	TOTAL SHEETS
04	CC	680	0.0/R2.8	355	504

REGISTERED CIVIL ENGINEER 8/7/09 DATE

2-1-10
PLANS APPROVAL DATE

REGISTERED PROFESSIONAL ENGINEER Z. Mangat No. 44843 Exp 3-31-10 CIVIL STATE OF CALIFORNIA

THE STATE OF CALIFORNIA OR ITS OFFICERS OR AGENTS SHALL NOT BE RESPONSIBLE FOR THE ACCURACY OR COMPLETENESS OF SCANNED COPIES OF THIS PLAN SHEET.

TEMPORARY RAILING (TYPE K)

SHEET No.	STATION	LOCATION	LENGTH-(LF)
TH-1	B 564+85 TO A 13+70	R†	1370
TH-1,2	A 3+75 TO 22+45	L†	1870
TH-2	A 21+00 TO 22+80	L†	180
TH-2,3,4,5	A 23+80 TO A4 123+00	R†	9920
TH-2,3,4,5	A 24+00 TO A4 131+20	L†	10720
TH-5,6	A4 104+00 TO 141+00	CENTER	3700
TH-6,7	A4 141+50 TO 149+10	R†	760
TH-7,8	A4 154+95 TO 163+15	L†	820
TH-9	A4 186+00 TO 193+35	L†	735
TH-10,11	A4 212+35 TO 223+20	R†	1085
TH-11,12	A4 218+70 TO 231+25	L†	1255
TH-13,14,15,16	A4 240+50 TO A3 336+00	R†	9550
TH-13,14,15,16	A4 242+50 TO A3 336+00	L†	9350
TH-15,16,17,18	A3 309+00 TO 351+30	CENTER	4230
TH-17,18,19	A3 347+10 TO 362+80	R†	1570
TH-17,18	A3 349+75 TO A4 353+50	L†	375
TH-21	A3 389+40 TO 397+00	R†	760
TH-21,22	A3 392+35 TO 405+50	L†	1315
TH-21,22	DR3 406+00 TO 407+00	R†	100
TH-21,22	A3 398+50 TO 403+75	R†	525
TH-21,22,23	DR4 400+00 TO A3 420+75	R†	2075
TH-22,23,24	A3 405+20 TO 424+70	L†	1950
TH-22 Thru TH-37	A3 404+20 TO A4 667+40	R† & L† (MEDIAN)	52640
TH-25,26	A3 441+20 TO 460+20	L†	1900
TH-27,28,29	A3 484+90 TO A4 536+40	L†	5150
TH-31,32	A4 547+20 TO 554+90	L†	770
TH-31,32	A4 552+95 TO 562+00	L†	905
TH-32,33	A3 573+20 TO 587+75	L†	1455
TH-33,34,35	A3 588+40 TO 603+60	L†	1520
TH-35	A3 606+60 TO 615+60	L†	900
TH-35,36	A3 630+90 TO 637+00	L†	610
TH-36	A4 645+60 TO 657+10	L†	1150
TH-36,37	A4 656+20 TO 667+90	L†	1170
SC-1,2	A4 103+00 TO 142+00	R†	3900
SC-1,2	A4 103+50 TO 142+50	L†	3900
SC-3,4,5	A3 309+50 TO 350+00	R†	4050
SC-3,4,5	A3 309+50 TO 351+50	L†	4200
SC-6,7	A4 104+00 TO 141+00	CENTER	3700
SC-8,9,10	A3 310+00 TO 349+00	CENTER	3900
SC-12,13	A4 102+00 TO 142+50	R†	4050
SC-12,13	A4 103+00 TO 143+10	L†	4010
SC-14,15,16	A3 308+10 TO 350+50	R†	4240
SC-14,15,16	A3 309+00 TO 351+15	L†	4215
TOTAL			172550

CHANNELIZER (SURFACE MOUNTED)

SHEET No.	STATION	LOCATION	EA
TH-1	B 564+85 TO A 14+50	R†	5
TH-2	A 14+50 TO 44+50	R† & L†	18
TH-5	A4 102+50 TO 132+50	L†	5
TH-6	A4 132+50 TO 147+50	R†	5
TH-8	A4 156+50 TO 171+50	L†	5
TH-9	A4 171+50 TO 200+50	L†	5
TH-10	A4 200+50 TO 215+50	R†	5
TH-12	A4 224+50 TO 239+50	R† & L†	14
TH-16	A3 324+50 TO 338+50	L†	5
TH-17	A3 338+50 TO 350+50	R†	7
TH-18	A3 350+50 TO A4 359+50	L†	5
TH-21	A3 387+50 TO 400+50	R†	5
TH-22	A3 400+50 TO 412+50	R† & L†	10
TH-24	A3 424+50 TO 438+50	L†	5
TH-26	A3 453+50 TO 467+50	L†	5
TH-29	A4 525+50 TO 538+50	L†	5
TH-32	A3 553+50 TO A3 576+50	L†	10
TH-33	A3 576+50 TO 589+50	L†	5
TH-35	A3 603+50 TO 632+50	L†	10
TH-36	A3 632+50 TO A4 660+50	L†	10
TH-37	A4 660+50 TO 673+50	L†	10
SC-1	A4 101+50 TO 132+50	R†	5
SC-2	A4 132+50 TO 147+50	L†	5
SC-3	A3 296+50 TO 324+50	R†	5
SC-5	A3 338+50 TO 351+50	L†	5
SC-12	A4 100+00 TO 132+50	R†	5
SC-13	A4 132+50 TO 147+50	L†	5
SC-14	A3 296+50 TO 324+50	R†	5
SC-15	A3 338+50 TO 352+00	L†	5
TOTAL			194

TEMPORARY CRASH CUSHION MODULE

SHEET No.	STATION	LOCATION	ARRAY	MODULE EA
TH-1	A 1+35 TO 14+50	R†	TS 14	14
TH-2	A 14+50 TO 44+50	R†	TS 14	14
TH-2	A 14+50 TO 44+50	L†	TU 21	21
TH-5	A4 12+50 TO 132+50	L†	TS 14	14
TH-6	A4 132+50 TO 147+50	R†	TU 14	14
TH-8	A4 156+50 TO 171+50	L†	TU 14	14
TH-9	A4 171+50 TO 200+50	L†	TS 14	14
TH-10	A4 200+50 TO 215+50	R†	TU 14	14
TH-12	A4 224+50 TO 239+50	L†	TU 14	14
TH-13	A4 239+50 TO 267+50	R†	TS 14	14
TH-16	A3 324+50 TO 338+50	L†	TS 14	14
TH-17	A3 338+50 TO 350+50	R†	TU 14	14
TH-18	A3 350+50 TO A4 359+50	L†	TS 14	14
TH-21	A3 387+50 TO 400+50	R†	TS 14	14
TH-22	A3 400+50 TO 412+50	R† & L†	TS 14	28
TH-24	A3 424+50 TO 438+50	L†	TS 14	14
TH-26	A3 453+50 TO 467+50	L†	TS 14	14
TH-29	A4 525+50 TO 538+50	L†	TU 14	14
TH-32	A4 553+50 TO A3 576+50	L†	TU 14	14
TH-32	A4 553+50 TO A3 576+50	L†	TS 14	14
TH-33	A3 576+50 TO 589+50	L†	TS 14	14
TH-35	A3 603+50 TO 632+50	L†	TU 14	28
TH-36	A3 632+50 TO A4 660+50	L†	TU 14	28
TH-37	A4 660+50 TO 665+80	L†	TS 14	28
SC-1	A4 102+50 TO 132+50	R†	TS 14	14
SC-2	A4 132+50 TO 147+50	L†	TS 14	14
SC-3	A3 296+50 TO 324+50	R†	TS 14	14
SC-5	A3 338+50 TO 350+50	L†	TS 14	14
SC-12	A4 100+00 TO 132+50	R†	TS 14	14
SC-13	A4 132+50 TO 147+50	L†	TS 14	14
SC-14	A3 296+50 TO 324+50	R†	TS 14	14
SC-16	A3 338+50 TO 352+00	L†	TS 14	14
TOTAL				511

SUMMARY OF QUANTITIES

Q-6

STATE OF CALIFORNIA - DEPARTMENT OF TRANSPORTATION
Caltrans DESIGN
FUNCTIONAL SUPERVISOR ARVIND K. GUPTA
CALCULATED-DESIGNED BY PETER LAC
CHECKED BY RANJEET SINGH
REVISED BY FY
DATE REVISED 10/29/09

LAST REVISION 11-23-09 DATE PLOTTED => 04-FEB-2010 TIME PLOTTED => 13:35

Dist	COUNTY	ROUTE	POST MILES TOTAL PROJECT	SHEET No.	TOTAL SHEETS
04	CC	680	0.0/R2.8	356	504

Zora S. Mangat 8/7/09
REGISTERED CIVIL ENGINEER DATE

2-1-10
PLANS APPROVAL DATE

REGISTERED PROFESSIONAL ENGINEER Z. Mangat No. 44843 Exp. 3-31-10 CIVIL STATE OF CALIFORNIA

THE STATE OF CALIFORNIA OR ITS OFFICERS OR AGENTS SHALL NOT BE RESPONSIBLE FOR THE ACCURACY OR COMPLETENESS OF SCANNED COPIES OF THIS PLAN SHEET.

EARTHWORK

STATION	LOCATION	IMPORTED BORROW (SHOULDER BACKING)	ROADWAY EXCAVATION ✳
		TON	CY
MAINLINE			
A 1+36 TO 8+60	Rt		174.3
A 21+30 TO A4 56+95	Rt		858.2
A4 58+80 TO 99+20	Rt		972.6
A4 101+05 TO 122+50	Rt		516.4
A4 141+95 TO 149+20	Rt		174.5
A4 156+50 TO 159+15	Rt		63.8
A4 147+50 TO 156+50	Rt		303.3
A4 210+80 TO 223+40	Rt		2319.5
A4 241+40 TO A3 337+75	Rt		379.2
A 347+25 TO 363+00	Rt		33.7
A3 388+70 TO 390+10	Rt		44.5
A3 392+65 TO 394+50	Rt		352.7
A 3+85 TO 18+50	Lt		782.4
A 24+50 TO A4 56+95	Lt		972.6
A4 58+80 TO 99+20	Lt		777.6
A4 101+05 TO 133+35	Lt		198.6
A4 154+95 TO 163+20	Lt		91.5
A4 208+50 TO 212+30	Lt		291.3
A4 218+65 TO 230+75	Lt		2117.3
A4 250+40 TO A3 338+35	Lt		368.3
A3 349+75 TO A4 365+05	Lt		98.7
A3 422+70 TO 429+70	Rt	35	
A3 432+05 TO 437+75	Rt	29	
A3 449+50 TO 454+00	Rt	23	
A3 457+00 TO 460+50	Rt	18	
A3 462+20 TO 465+30	Rt	16	
A4 483+50 TO 485+95	Rt	12	
A4 488+60 TO 498+00	Rt	48	
A4 515+00 TO 519+80	Rt	24	
A4 531+00 TO 545+50	Rt	73	
A4 547+85 TO 555+20	Rt	37	
A4 564+92 TO 571+00	Rt	31	
A3 582+50 TO 585+50	Rt	15	
A3 588+10 TO 594+62	Rt	33	
A3 597+25 TO 601+60	Rt	22	
A3 628+00 TO 633+50	Rt	28	
A4 663+00 TO 665+35	Rt	12	
A3 424+90 TO 429+70	Lt	24	
A3 432+05 TO 438+80	Lt	34	
A3 454+70 TO 460+08	Lt	27	
A3 462+20 TO 466+35	Lt	21	
A3 467+00 TO 475+00	Lt	41	
A4 484+00 TO 485+54	Lt	9	
A3 597+65 TO 604+50	Lt	35	
A4 641+00 TO 665+35	Lt	123	
FROM Q-2 SHEET			15648.0
DR3 404+32 TO 404+70	Rt		16.9
DR4 404+00 TO 404+90	Rt		31.1
GL5 548+77 TO 549+45	Lt		31.1
GR5 548+90 TO 549+90	Rt		15.9
TOTAL		770	27634.0

✳ SEE SHEET X-1, STRUCTURAL SECTIONS No. 78
FROM A1 +36 TO A4 365+05

3'' PLASTIC PIPE (EDGE DRAIN)

SHEET No.	STATION	LOCATION	LENGTH
			LF
L-9	A4 193+80 TO 210+78	Rt	1698
L-10	A4 207+00 TO 217+17	Lt	1017
L-11	A4 223+40 TO 241+40	Rt	1800
L-12	A4 230+75 TO 250+40	Lt	1965
TOTAL			6480

TEMPORARY FENCE (TYPE ESA) ✳

STATION	LOCATION	TEMPORARY FENCE (TYPE ESA)
		LF
A 39+40 TO A4 48+60	Lt	1070
A4 79+28 TO 81+55	Lt	227
A4 85+00 TO 87+00	Lt	250
A4 105+24 TO 116+52	Lt	1128
A4 118+45 TO 127+90	Lt	945
A4 129+00 TO 143+45	Rt	1445
A4 131+00 TO 142+85	Lt	1185
A4 178+30 TO 181+00	Rt	270
A4 184+00 TO 186+00	Rt	200
A4 187+90 TO 192+00	Rt	410
A4 195+40 TO 202+70	Lt	730
A4 241+30 TO 243+40	Rt	210
A4 245+70 TO 265+30	Lt	1960
A3 392+75 TO 394+40	Rt	165
A3 461+00 TO 487+30	Rt	2630
A3 488+05 TO 508+65	Rt	2060
A4 510+20 TO 537+10	Rt	2690
A3 565+00 TO 590+50	Rt	2550
A3 600+75 TO 658+00	Rt	5725
GR4 537+00 TO 548+10	Rt	1110
LR3 590+50 TO 596+00	Rt	550
LR2 596+00 TO 600+75	Rt	475
R2 658+00 TO 665+20	Rt	720
TOTAL		28705

✳ SEE TRAFFIC HANDLING PLANS FOR TEMPORARY FENCE (TYPE ESA) LOCATIONS

SUMMARY OF QUANTITIES

Q-7

STATE OF CALIFORNIA - DEPARTMENT OF TRANSPORTATION
Caltrans DESIGN
FUNCTIONAL SUPERVISOR ARVIND K. GUPTA
CALCULATED-DESIGNED BY PETER LAC
CHECKED BY ZORA S. MANGAT
REVISED BY RS
DATE REVISED 7/20/09

LAST REVISION 11-23-09
DATE PLOTTED => 08-FEB-2010
TIME PLOTTED => 11:18

Dist	COUNTY	ROUTE	POST MILES TOTAL PROJECT	SHEET No.	TOTAL SHEETS
04	CC	680	0.0/R2.8	357	504

Zora S. Mangat 8/7/09
REGISTERED CIVIL ENGINEER DATE

2-1-10
PLANS APPROVAL DATE

REGISTERED PROFESSIONAL ENGINEER Z. Mangat No. 44843 Exp. 3-31-10 CIVIL STATE OF CALIFORNIA

THE STATE OF CALIFORNIA OR ITS OFFICERS OR AGENTS SHALL NOT BE RESPONSIBLE FOR THE ACCURACY OR COMPLETENESS OF SCANNED COPIES OF THIS PLAN SHEET.

REMOVE EDGE DRAIN

SHEET No.	STATION	LOCATION	REMOVE Exist EDGE DRAIN	HOT MIX ASPHALT *
			LF	TON
L-1	A 1+35 TO 8+60	R†	725	54
L-1, 2	A 3+85 TO 18+50	L†	1465	110
L-2, 3	A 21+30 TO A4 57+25	R†	3595	270
L-2, 3	A 24+45 TO A4 57+25	L†	3280	246
L-3, 4	A4 58+50 TO 99+35	R†	4085	306
L-3, 4	A4 58+50 TO 99+35	L†	4085	306
L-4, 5	A4 100+84 TO 122+50	R†	2166	162
L-4, 5	A4 100+73 TO 133+35	L†	3262	245
L-6, 7	A4 141+95 TO 149+30	R†	735	55
L-7, 8	A4 155+00 TO 163+20	L†	820	62
L-8	A4 156+50 TO 159+21	R†	271	20
L-10, 11	A4 210+78 TO 223+40	R†	1262	95
L-11, 12	A4 217+17 TO 230+75	L†	1358	102
L-13, 14, 15, 16	A4 241+40 TO A3 337+75	R†	9635	723
L-13, 14, 15, 16	A4 250+40 TO 338+50	L†	8810	661
L-17, 18, 19	A3 347+25 TO 363+00	R†	1575	118
L-17, 18, 19	A3 349+75 TO 365+05	L†	1530	115
L-20	A3 384+54 TO 390+95	L†	641	48
L-21	A3 388+75 TO 390+25	R†	150	11
L-21	A3 393+00 TO 396+80	L†	380	29
L-21	A3 392+60 TO 396+80	R†	420	32
L-21, 22, 23, 24	A3 399+25 TO 429+70	L†	3045	228
L-21, 22	A3 398+85 TO 403+73	R†	488	37
L-21, 22	A3 412+50 TO 420+80	R†	830	62
L-24	A3 424+50 TO 429+72	R†	522	39
L-24	A3 432+05 TO 436+80	R†	475	36
L-24, 25, 26	A3 432+15 TO 460+08	L†	2793	209
L-26	A3 462+20 to 465+30	R†	310	23
L-26, 27	A3 462+20 TO 486+50	L†	2430	182
L-27	A3 473+80 TO 486+50	R†	1270	95
L-27, 28, 29	A3 488+60 TO A4 533+00	R†	4440	333
L-27, 28, 29	A3 488+60 TO A4 527+00	L†	3840	288
L-30,31	A4 538+50 TO 545+62	L†	712	53
L-30,31	A4 538+50 TO 545+62	R†	712	53
L-31, 32	A4 547+85 TO 557+30	R†	945	71
L-31, 32, 33	A4 548+85 TO A3 595+10	L†	4625	347
L-32, 33, 34	A3 564+92 TO 594+80	R†	2988	224
L-34	A3 597+50 TO 600+55	R†	305	23
L-34, 35	A3 597+65 TO 608+63	L†	1098	82
L-35, 36	A3 612+80 TO 650+80	R†	3800	285
L-36, 37	A3 636+70 TO 655+35	L†	1865	140
TOTAL			87743	6580

REMOVE CONCRETE/HOT MIX ASPHALT

SHEET No.	STATION	LOCATION	LANE No.	REMOVE CONCRETE	*HOT MIX ASPHALT (TYPE A)	AGGREGATE SUBBASE (CLASS 4 AS) * *
				CY	TON	CY
L-21	A3 399+ TO 400+50	L† & R†	2,3,4	16	33	
L-22	A3 400+50 TO 412+50	L† & R†	2,3,4	16	32	
L-24	A3 424+50 TO 438+50	L† & R†	2,3,4	16	33	
L-25	A3 438+50 TO 453+50	L† & R†	2,3,4	32	65	
L-26	A3 453+50 TO 467+50	L† & R†	2,3,4	51	104	
L-27	A3 467+50 TO 496+50	L† & R†	2,3,4	51	104	
L-28	A3 496+50 TO 525+50	L† & R†	2,3,4	84	170	
L-29	A3 525+50 TO 538+50	L† & R†	2,3,4	24	48	
L-30	A3 538+50 TO 545+50	L† & R†	2,3,4	7	14	
L-30	GL4 540+30 TO 544+75	L†	RAMP	108	166	26
L-31	A3 545+50 TO 553+50	L† & R†	2,3,4	44	89	
L-32	A3 553+50 TO 576+50	L† & R†	2,3,4	84	169	
L-33	A4 576+50 TO 589+50	L† & R†	2,3,4	41	82	
L-34	A4 589+50 TO 603+50	L† & R†	2,3,4	27	54	
L-34	LL3 591+30 TO 595+70	L†	RAMP	106	164	26
L-34	LR2 596+00 TO 598+70	R†	RAMP	65	101	16
L-35	A4 603+50 TO 632+50	L† & R†	2,3,4	279	565	
L-36	A4 632+50 TO 660+50	L† & R†	2,3,4	35	70	
TOTAL				1086	2063	68

* FOR SUMMARY OF HMA, SEE SHEET Q-5
* * FOR SUMMARY OF AGGREGATE SUBBASE CLASS 4 AS, SEE SHEET Q-2

MINOR CONCRETE (PAVING)

SHEET No.	STATION	LOCATION	VOLUME	CLASS 2 AGGREGATE BASE
			CY	
L-21	DR3 404+32 TO 404+70	R†	8.40	8.4
L-22	DR4 404+00 TO 404+90	R†	15.60	15.6
L-30	CL5 548+77 TO 549+45	L†	15.60	15.6
L-31	GR5 548+90 TO 549+90	R†	7.60	7.9
FROM DRAINAGE TV DQ-18			403.66	
MINOR CONCRETE (ANCHOR BLOCK)			106.2	
TOTAL			557.06	47.5

REMOVE CONCRETE SUMMARY

LOCATION	VOLUME
	CY
FROM REMOVE HOT MIX ASPHALT CONCRETE	1086.0
FROM DRAINAGE QUANITITES DQ-18	352.9
RUDGEAR PARK & RIDE	11.0
ADA CURB RAMP FROM Q-12	86.7
TOTAL	1536.6

SUMMARY OF QUANTITIES

Q-8

STATE OF CALIFORNIA - DEPARTMENT OF TRANSPORTATION
Caltrans
DESIGN
FUNCTIONAL SUPERVISOR: ARVIND K. GUPTA
CALCULATED-DESIGNED BY: HOA LAI
CHECKED BY: ZORA S. MANGAT
REVISED BY: FY
DATE REVISED: 7/20/09

LAST REVISION DATE PLOTTED => 04-FEB-2010
TIME PLOTTED => 13:35
12-02-09

Dist	COUNTY	ROUTE	POST MILES TOTAL PROJECT	SHEET No.	TOTAL SHEETS
04	CC	680	0.0/R2.8	358	504

Zora S. Mangat 8/7/09
REGISTERED CIVIL ENGINEER DATE

2-1-10
PLANS APPROVAL DATE

REGISTERED PROFESSIONAL ENGINEER Z. Mangat No. 44843 Exp. 3-31-10 CIVIL STATE OF CALIFORNIA

THE STATE OF CALIFORNIA OR ITS OFFICERS OR AGENTS SHALL NOT BE RESPONSIBLE FOR THE ACCURACY OR COMPLETENESS OF SCANNED COPIES OF THIS PLAN SHEET.

METAL BEAM GUARD RAILING

STATION	LOCATION	MBGR	LAYOUT (TYPE)	EAA (SFT)	AITSET	AFTSET	TRANSITION RAILING (TYPE WB)	GUARDRAIL DELINEATOR CLASS 1	OBJECT MARKERS (L-1)	OBJECT MARKERS (P)	* MINOR CONCRETE (ANCHOR BLOCK)
		LF		EA							CY
A 1+47 TO 2+97	L†	150	16B w/SRS	1		1		6	1		
A4 52+21 TO 57+21	L†	500	12DD	1				20			3.0
A4 58+93 TO 66+93	L†	800	12A		1		1	32	1		3.0
A4 95+31 TO 99+31	L†	300	12DD	1				12	1		3.0
A4 101+13 TO 104+13	L†	300	12A		1		1	12	1		3.0
A4 136+90 TO 139+15	L†	225	16B	1		1		9	1		
A4 108+50 TO 114+00	L†	550	16B	1		1		22	1		
A4 151+47 TO 152+72	L†	125	16B	1		1		5	1		
A4 166+44 TO 170+44	L†	400	16B	1		1		16			
A4 176+99 TO 178+99	L†	200	16B	1				8	1		
A4 242+93 TO 248+31	L†	538	16B	1		1		22	1		
A4 232+96 TO 233+71	L†	75	16B	1		1		3	1		
A3 315+16 TO 317+29	L†	213	16B	1		1		9	1		
A4 277+93 TO 278+31	L†	38	16A	1	1			2	1		
A4 355+17 TO 356+47	L†	130	16C w/SRS	1		1		5			
A3 427+76 TO 430+01	L†	225	12DD	1				9			
A3 407+38 TO PL3 426+38	L†	1900	12A		1		1	76			
A3 432+40 TO 435+40	L†	300	12A		1		1	12	1		9.7
A3 454+89 TO 460+14	L†	525	12D				1	5			2.3
A3 462+08 TO 462+21	L†	13	12A		1		1	6		1	3.0
A3 603+19 TO 603+32	L†	13	12B			1	1	1			
A3 635+50 TO 637+63	L†	213	12A		1		1	9	1	1	
A4 671+61 TO A4N 672+61	L†	100	12B			1	1	4	1	1	3.0
A 24+19 TO 24+44	R†	25	12B			1	1	1	1		
A4 124+33 TO 125+21	R†	88	12DD	1				4			
A4 137+77 TO BRI 143+52	R†	575	16B	1		1		23	1		
A4 151+10 TO 152+85	R†	175	16B w/SRS	1		1		7	1		
A4 156+50 TO 157+88	R†	138	16B	1		1		6			
A4 193+20 TO 193+58	R†	38	16B	1		1		2	1		
A4 195+97 TO 197+22	R†	125	12B			1	1	5	1		3.0
A4 207+72 TO 208+10	R†	38	16B	1		1		2	1		
A4 243+50 TO 243+75	R†	25	12B			1	1	1	1		
A4 267+58 TO 268+08	R†	50	16B w/SRS	1		1		2	1		
A4 284+24 TO 284+74	R†	50	12B			1	1	2	1		
A3 388+72 TO 390+09	R†	137	12D w/EC(A)				1	5	2		3.0
A3 396+25 TO 396+50	R†	25	12A		1		1	1	1		3.0
A3 414+48 TO 415+23	R†	75	12DD	1				3			
A3 420+50 TO 420+88	R†	38	16A	1	1	1		2	1		
A3 427+43 TO 429+43	R†	200	12B			1	1	8	1		3.0
A3 459+83 TO 460+21	R†	38	12B				1	2	1		3.0
A3 485+01 TO 486+51	R†	150	12A		1			6	1		3.0
A3 488+53 TO 492+07	R†	354	12DD w/EC(A)	1				14			3.0
A4 508+08 TO 508+33	R†	25	12A		1		1	1	1		3.0
A4 514+72 TO 515+10	R†	38	16A	1	1			2	1		
A4 533+15 TO 534+03	R†	88	16B	1		1		4	1		
A4 543+02 TO 545+77	R†	275	12A w/SRS		1		1	7	1		9.0
A3 563+92 TO 569+92	R†	600	12DD	1				24			
A3 576+72 TO 577+10	R†	38	16A	1	1			2	1		
A3 585+20 TO 585+58	R†	38	16A	1	1			2	1		
A3 594+37 TO 594+62	R†	25	12B				1	1	1		9.7
A3 620+75 TO 621+75	R†	100	16A	1	1			4	1		
A3 629+17 TO 630+17	R†	100	16A	1	1			4	1		
A4 652+15 TO 653+65	R†	150	16A	1	1			6	1		
A4 665+10 TO 665+35	R†	25	12B			1	1	1	1		7.4
(FOR TOTAL SEE SHEET Q-10)	SUBTOTAL	11679		32	18	25	21	459	42	3	80.1

NOTES

* FOR SUMMARY OF MINOR CONCRETE, SEE SHEET Q-8.

EC(A) = END CAP (TYPE A)
SRS = STRENGTHENED RAILING SECTION

SUMMARY OF QUANTITIES

Q-9

STATE OF CALIFORNIA - DEPARTMENT OF TRANSPORTATION
Caltrans DESIGN
FUNCTIONAL SUPERVISOR: ARVIND K. GUPTA
CALCULATED-DESIGNED BY: HOA LAI
CHECKED BY: ZORA S. MANGAT
REVISED BY: FY
DATE REVISED: 7/20/09

LAST REVISION 12-03-09
DATE PLOTTED => 04-FEB-2010
TIME PLOTTED => 13:36

Dist	COUNTY	ROUTE	POST MILES TOTAL PROJECT	SHEET No.	TOTAL SHEETS
04	CC	680	0.0/R2.8	359	504

Zora S. Mangat 8/7/09
REGISTERED CIVIL ENGINEER DATE

2-1-10
PLANS APPROVAL DATE

REGISTERED PROFESSIONAL ENGINEER Z. Mangat No. 44843 Exp. 3-31-10 CIVIL STATE OF CALIFORNIA

THE STATE OF CALIFORNIA OR ITS OFFICERS OR AGENTS SHALL NOT BE RESPONSIBLE FOR THE ACCURACY OR COMPLETENESS OF SCANNED COPIES OF THIS PLAN SHEET.

EC(A) = END CAP (TYPE A)
SRS = STRENGTHENED RAILING SECTION

REMOVE METAL BEAM GUARD RAILING

NORTHBOUND STATION MAINLINE	LENGTH LF
B 568+62 TO A 2+23	161
A 24+19 TO 24+69	50
A4 124+33 TO 125+27	94
A4 137+77 TO BR1 143+52	575
A4 150+47 TO 152+85	238
A4 156+50 TO 157+88	138
A4 193+20 TO 193+58	38
A4 196+97 TO 197+47	50
A4 207+72 TO 208+10	38
A4 243+50 TO 244+00	50
A4 267+58 TO 268+08	50
A4 284+24 TO 284+99	75
A4 354+50 TO 356+00	150
A3 388+72 TO 390+34	162
A3 396+25 TO 396+75	50
A3 420+50 TO 420+88	38
A3 427+43 TO 429+68	225
A3 431+73 TO 433+23	150
A3 459+83 TO 460+46	63
A3 485+01 TO 486+77	176
A4 508+08 TO 508+58	50
A4 533+15 TO 534+03	88
A3 594+37 TO 594+87	50
A3 620+75 TO 621+75	100
A4 648+22 TO 648+85	63
A4 665+10 TO 665+60	50
SUBTOTAL	2972

SOUTHBOUND STATION MAINLINE	LENGTH LF
A 1+47 TO 2+97 150	150
160' L+ A 10+50 TO 10+75	25
180' L+ A 12+00 TO 12+25	25
110' L+ A 15+20 TO 15+45	25
A 21+48 TO 21+73	25
A4 58+68 TO 59+56	88
A4 72+50 TO 73+00	50
A4 100+88 TO 101+64	75
A4 151+47 TO 152+72	125
A4 166+44 TO 166+94	50
A4 232+96 TO 233+96	100
A4 247+93 TO 248+69	76
A3 315+16 TO 315+79	63
A3 316+90 TO 317+78	88
A4 355+17 TO 357+47	230
A4 407+38 TO PL3 426+38	1900
A3 432+40 TO 432+90	50
A3 454+64 TO 460+14	550
A3 461+83 TO 462+91	108
A3 602+94 TO 603+32	38
A3 635+25 TO 636+00	75
A4 671+36 TO 672+99	163
SUBTOTAL	4079

NORTHBOUND STATION RAMPS	LENGTH LF
DR2 574+19 TO 574+69	50
VR4 362+90 TO 363+15	25
DR4 400+74 TO 402+68	194
GR5 542+52 TO 546+02	350
GR6 548+40 TO 549+40	100
GR6 556+60 TO 558+10	150
SUBTOTAL	869

SOUTHBOUND STATION RAMPS	LENGTH LF
SR1 571+57 TO 572+06	50
BL2 159+90 TO 160+28	38
BL1 151+50 TO 152+10	60
L+ BL3 156+60 TO 156+98	38
R+ BL3 155+40 TO 156+65	125
VL2 360+54 TO 361+04	50
VL5A 357+60 TO 365+07	747
DL2 393+94 TO 395+57	163
GL5 548+78 TO 549+53	75
GL6 548+18 TO 548+94	75
LL3 590+99 TO 591+55	56
SUBTOTAL	1477
TOTAL	9397

METAL BEAM GUARD RAILING

STATION	LOCATION	MBGR	LAYOUT (TYPE)	EAA (SFT)	AITSET	AFTSET	TRANSITION RAILING (TYPE WB)	GUARDRAIL DELINEATOR CLASS 1	OBJECT MARKERS (L-1)	OBJECT MARKERS (P)	* MINOR CONCRETE ANCHOR BLOCK (CY)
		LF		EA							
NORTHBOUND RAMPS											
DR2 574+19 TO 574+44	R+	25	12B			1	1	1	1		
VR6B 347+47 TO 349+16	R+	175	16B	1		1		7	1		
VR4 362+78 TO 362+90	R+	12	12B			1	1	1	1		
DR4 400+74 TO 402+37	R+	163	12A		1		1	7	1		
GR5 548+00 TO 550+86	R+	286	12DD w/ EC(A)	1				12			3.0
GR6 548+40 TO 549+40	R+	100	16B			1		4	1		
SOUTHBOUND RAMPS											
SR1 571+81 TO 572+06	L+	25	12A		1		1	1	1		9.7
190' L+ A 12+25 TO 12+50	L+						1	1			
A 15+25 TO 15+50	L+						1	1			
BL2 159+90 TO 160+28	L+					1		2			
BL1 151+72 TO 152+09	L+					1		2			
BL3 156+60 TO 156+98						1					
BL3 155+40 TO 156+15		75	16A	1	1						
BL3 161+00 TO 163+40	L+	340	16A	1	1			14	1		
VL2 360+54	L+		CRASH CUSHION (TYPE CAT)						1		
VL5A 357+60 TO 365+07	L+	747	12DD	1				30			
DL2 393+94 TO 395+07	L+	113	12A		1		1	5	1		6.7
DL3A 399+70 TO 402+40	L+	275	12DD	1				11			
PL4 439+10 TO 449+73	L+	63	16A	1	1			3	1		
GL5 548+78 TO 549+53	L+	75	12DD w/ EC(A)	1				3			6.7
GL6 548+43 TO 548+56	L+	13	12A		1		1	1	1		
LL3 591+30 TO 591+55	L+	25	12A		1		1	1	1		
LL4 599+00 TO 601+73	L+	273	16B	1		1		11	1		
SUBTOTAL		2785		8	7	7	9	118	13		26.1
SUBTOTAL (SEE SHEET Q-9)		11679		32	18	25	21	459	42	3	80.1
TOTAL		14464		41	26	33	30	577	55	3	106.2

* FOR SUMMARY OF MINOR CONCRETE, SEE SHEET Q-8

SUMMARY OF QUANTITIES

Q-10

STATE OF CALIFORNIA - DEPARTMENT OF TRANSPORTATION
Caltrans DESIGN
FUNCTIONAL SUPERVISOR ARVIND K. GUPTA
CALCULATED-DESIGNED BY HOA LAI
CHECKED BY ZORA S. MANGAT
REVISED BY FY
DATE REVISED 7/20/09

LAST REVISION 12-03-09
DATE PLOTTED => 16-FEB-2010
TIME PLOTTED => 11:04

Dist	COUNTY	ROUTE	POST MILES TOTAL PROJECT	SHEET No.	TOTAL SHEETS
04	CC	680	0.0/R2.8	360	504

Zora S. Mangat 8/7/09
REGISTERED CIVIL ENGINEER DATE

2-1-10
PLANS APPROVAL DATE

REGISTERED PROFESSIONAL ENGINEER
Z. Mangat
No. 44843
Exp. 3-31-10
CIVIL
STATE OF CALIFORNIA

THE STATE OF CALIFORNIA OR ITS OFFICERS OR AGENTS SHALL NOT BE RESPONSIBLE FOR THE ACCURACY OR COMPLETENESS OF SCANNED COPIES OF THIS PLAN SHEET.

PAINT POST MILE MARKING ON CONCRETE BARRIER

STATION	POST MILE	LOCATION	SQYD
A4 105+24	2.0	Lt & Rt	0.286
A4 110+52	2.1	Lt & Rt	0.286
A4 115+80	2.2	Lt & Rt	0.286
A4 121+08	2.3	Lt & Rt	0.286
A4 126+36	2.4	Lt & Rt	0.286
A4 131+64	2.5	Lt & Rt	0.286
A4 136+92	2.6	Lt & Rt	0.286
A3 311+16	5.9	Lt & Rt	0.286
A3 316+44	6.0	Lt & Rt	0.286
A3 321+72	6.1	Lt & Rt	0.286
A3 327+00	6.2	Lt & Rt	0.286
A3 332+28	6.3	Lt & Rt	0.286
A3 337+56	6.4	Lt & Rt	0.286
A3 342+84	6.5	Lt & Rt	0.286
A3 348+12	6.6	Lt & Rt	0.286
A3 400+99	7.6	Lt & Rt	0.286
A3 406+27	7.7	Lt & Rt	0.286
A3 411+55	7.8	Lt & Rt	0.286
A3 416+83	7.9	Lt & Rt	0.286
A3 422+11	8.0	Lt & Rt	0.286
A3 427+39	8.1	Lt & Rt	0.286
A3 432+67	8.2	Lt & Rt	0.286
A3 437+95	8.3	Lt & Rt	0.286
A3 443+23	8.4	Lt & Rt	0.286
A3 448+51	8.5	Lt & Rt	0.286
A3 453+79	8.6	Lt & Rt	0.286
A3 459+07	8.7	Lt & Rt	0.286
A3 464+35	8.8	Lt & Rt	0.286
A3 469+63	8.9	Lt & Rt	0.286
A3 474+91	9.0	Lt & Rt	0.286
A3 480+19	9.1	Lt & Rt	0.286
A3 485+47	9.2	Lt & Rt	0.286
A3 490+75	9.3	Lt & Rt	0.286
A4 496+03	9.4	Lt & Rt	0.286
A4 501+31	9.5	Lt & Rt	0.286
A4 506+69	9.6	Lt & Rt	0.286
A4 511+87	9.7	Lt & Rt	0.286
A4 517+15	9.8	Lt & Rt	0.286
A4 522+43	9.9	Lt & Rt	0.286
A4 527+71	10.0	Lt & Rt	0.286
A4 532+99	10.1	Lt & Rt	0.286
A4 538+27	10.2	Lt & Rt	0.286
A4 543+55	10.3	Lt & Rt	0.286
A4 548+83	10.4	Lt & Rt	0.286
A4 554+11	10.5	Lt & Rt	0.286
A4 559+39	10.6	Lt & Rt	0.286
A3 566+06	10.7	Lt & Rt	0.286
A3 571+34	10.8	Lt & Rt	0.286
A3 576+62	10.9	Lt & Rt	0.286
A3 581+90	11.0	Lt & Rt	0.286
A3 587+18	11.1	Lt & Rt	0.286
A3 592+46	11.2	Lt & Rt	0.286
A3 597+74	11.3	Lt & Rt	0.286
A3 603+02	11.4	Lt & Rt	0.286
A3 608+30	11.5	Lt & Rt	0.286
A3 613+58	11.6	Lt & Rt	0.286
A3 618+86	11.7	Lt & Rt	0.286
A3 624+14	11.8	Lt & Rt	0.286
A3 629+42	11.9	Lt & Rt	0.286
A3 634+70	12.0	Lt & Rt	0.286
A3 639+98	12.1	Lt & Rt	0.286
A3 645+26	12.2	Lt & Rt	0.286
A3 650+54	12.3	Lt & Rt	0.286
A4 655+82	12.4	Lt & Rt	0.286
A4 661+10	12.5	Lt & Rt	0.286
A4 666+38	12.6	Lt & Rt	0.286
TOTAL			18.876

PARK AND RIDE QUANTITIES

LOCATION	△ COLD PLANE AC Pvmt * *	REMOVE Conc * * *	* HMA-A	STRUCTURAL Conc	BAR REINFORCING STEEL	MINOR Conc (SIDEWALK)	MINOR Conc (CURB RAMP)	MINOR Conc (CURB)	TUBULER HANDRAILING
	SQYD	CY	TON	CY	LB	CY			LF
RUDGEAR RD	84	11	23	6.3	1000	1	4	1.2	200
FROM Q-12							86.7		
TOTAL							90.7		

* SEE SHEET Q-5 FOR TOTAL HMA QUANTITY
* * SEE SHEET Q-3 FOR TOTAL COLD PLANE QUANTITY
* * * SEE SHEET Q-8 FOR TOTAL REMOVE Conc QUANTITY

SUMMARY OF QUANTITIES

Q-11

STATE OF CALIFORNIA - DEPARTMENT OF TRANSPORTATION
Caltrans DESIGN
FUNCTIONAL SUPERVISOR: ARVIND K. GUPTA
CALCULATED-DESIGNED BY: HOA LAI
CHECKED BY: ZORA S. MANGAT
REVISED BY: FY
DATE REVISED: 7/20/09

LAST REVISION 11-23-09
DATE PLOTTED => 04-FEB-2010
TIME PLOTTED => 13:36

Dist	COUNTY	ROUTE	POST MILES TOTAL PROJECT	SHEET No.	TOTAL SHEETS
04	CC	680	0.0/R12.8	361	504

Zora S. Mangat 8/7/09
REGISTERED CIVIL ENGINEER DATE

2-1-10
PLANS APPROVAL DATE

REGISTERED PROFESSIONAL ENGINEER Z. Mangat No. 44843 Exp. 3-31-10 CIVIL STATE OF CALIFORNIA

THE STATE OF CALIFORNIA OR ITS OFFICERS OR AGENTS SHALL NOT BE RESPONSIBLE FOR THE ACCURACY OR COMPLETENESS OF SCANNED COPIES OF THIS PLAN SHEET.

Δ ROADSIDE CLEARING (TREE REMOVAL)

TREE ID	LOCATION	STATION	TREE TRUNK CALIPER* (dbh) (in) 1"-12"	12"-24"	>24"	TREE NAME COMMON NAME	
T1	SB 1	601+84	X			OAK	NATIVE
T2	SB 1	598+50		X		AMERICAN SWEETGUM	
T3	SB 2	547+76	X			SILK TREE	
T4	SB 3	545+20	X			OAK	NATIVE
T5	SB 3	544+87	X			OAK	NATIVE
T11	SB 8	319+10	X			OAK	NATIVE
T12	SB 9	295+10		X		PINE	
T14	SB 11	258+63			X	EUCALYPTUS	
T15	SB 11	257+40	X			PINE	
T16	SB 11	257+8	X			PINE	
T18	SB 12	215+20	X			OAK	NATIVE
T19	SB 13	193+45	X			SYCAMORE	NATIVE
T20	SB 13	193+50	X			SYCAMORE	NATIVE
T21	SB 14	186+23			X	EUCALYPTUS	
T22	SB 14	185+83			X	EUCALYPTUS	
T23	SB 15	181+36			X	EUCALYPTUS	
T24	SB 16	167+68			X	EUCALYPTUS	
T25	SB 16	164+00			X	EUCALYPTUS	
T26	SB 16	160+48	X			EUCALYPTUS	
T27	SB 16	160+00	X			EUCALYPTUS	
T28	SB 16	159+75	X			EUCALYPTUS	
T29	SB 17	148+62		X		PEPPER TREE	
T30	SB 18	139+38			X	EUCALYPTUS	
T31	SB 19	127+25		X		EUCALYPTUS	ESA AREA
T33	SB 21	91+45	X			OAK	NATIVE
T34	SB 22	50+20	X			OLIVE	
T1	NB 1	147+60	X			PINE	
T2	NB 1	147+80	X			PINE	
T3	NB 1	148+00	X			PINE	
T4	NB 2	153+76	X			OAK	NATIVE
T5	NB 3	158+00	X			SILK TREE	
T6	NB 4	148+00		X		EUCALYPTUS	
T7	NB 5	193+56	X			SYCAMORE	NATIVE
T8	NB 5	193+65	X			SYCAMORE	NATIVE
T9	NB 6	216+70			X	EUCALYPTUS	
T10	NB 7	224+70	X			OAK	NATIVE
T11	NB 7	225+35	X			SYCAMORE	NATIVE
T12	NB 7	226+60	X			OAK	NATIVE
T13	NB 8	232+60	X			OAK (1 LARGE LIMB)	NATIVE
T14	NB 8	233+90	X			WALNUT	
T15	NB 9	353+10			X	PINE	
T19	NB 9	353+10	X			OAK	NATIVE
T20	NB 9	353+10	X			OAK	NATIVE
		TOTAL	29	5	9		

* = TREE TRUNK CALIPER (dbh) IS DIAMETER AT BREAST HEIGHT (40"-42").
Δ = FOR LOCATION OF TREE REMOVAL, SEE L-SHEETS
* * = FOR SUMMARY OF MINOR CONCRETE (CURB RAMP), SEE SHEET Q-11
* * * = FOR SUMMARY OF REMOVE CONCRETE, SEE SHEET Q-8

CURB RAMPS

	LOCAL STREET	REMOVE CONCRETE * * *	* * MINOR CONCRETE (CURB RAMP)	DETECTABLE WARNING SURFACE (N)	UTILITY BOX COVER
		CURB RAMP AND GUTTER			
		CY		SQFT	EA
1	NB ON-RAMP FROM ALCOSTA Blvd	2.5	2.5	32	1
2	NB OFF-RAMP TO BOLLINGER CANYON Rd	6.7	6.7	32	1
3	NB ON-RAMP LOOP FROM BOLLINGER CANYON Rd	5.0	5.0	32	
4	SB ON-RAMP FROM BOLLINGER CANYON Rd	5.0	5.0	32	
5	NB OFF-RAMP TO CROW CANYON Rd	5.0	5.0	32	1
6	SB ON-RAMP TO CROW CANYON Rd	5.0	5.0	32	
7	NB ON-RAMP FROM SYCAMORE VALLEY Rd	4.5	4.5	32	3
8	SB OFF-RAMP TO SYCAMORE VALLEY Rd	4.5	4.5	32	1
9	NB OFF-RAMP TO DIABLO Rd	1.5	1.5	16	
10	NB ON-RAMP FROM DIABLO Rd	5.5	5.5	32	
11	SB ON-RAMP FROM DIABLO Rd	1.5	1.5	16	
12	SB OFF-RAMP TO DIABLO Rd	4.0	4.0	32	
13	SB OFF-RAMP TO DIABLO Rd (ISLAND)	3.0	3.0	48	1
14	NB OFF-RAMP TO EL CERRO Blvd	3.0	3.0	32	
15	NB ON-RAMP FROM EL CERRO Blvd	3.0	3.0	32	
16	SB OFF-RAMP TO EL CERRO Blvd	4.5	4.5	32	
17	SB OFF-RAMP TO EL CERRO Blvd	1.5	1.5	16	
18	SB ON-RAMP FROM EL CERRO Blvd	5.0	5.0	32	
19	NB OFF-RAMP TO STONE VALLEY Rd	5.0	5.0	32	
20	NB OFF-RAMP LOOP TO STONE VALLEY Rd	1.5	1.5	16	
21	NB ON-RAMP FROM STONE VALLEY Rd	2.5	2.5	16	
22	SB OFF-RAMP TO STONE VALLEY Rd	4.0	4.0	32	
23	SB OFF-RAMP LOOP TO STONE VALLEY Rd	1.5	1.5	16	
24	SB ON-RAMP FROM STONE VALLEY Rd	1.5	1.5	16	
25	RUDGEAR PARK AND RIDE			48	1
	TOTAL	86.7	86.7	720	9

SUMMARY OF QUANTITIES

Q-12

STATE OF CALIFORNIA - DEPARTMENT OF TRANSPORTATION
Caltrans DESIGN
FUNCTIONAL SUPERVISOR ARVIND K. GUPTA
CALCULATED-DESIGNED BY RANJEET SINGH
CHECKED BY ZORA S. MANGAT
REVISED BY RS
DATE REVISED 7/20/09

LAST REVISION 12-02-09
DATE PLOTTED => 04-FEB-2010
TIME PLOTTED => 13:33

Dist	COUNTY	ROUTE	POST MILES TOTAL PROJECT	SHEET No.	TOTAL SHEETS
04	CC	680	0.0/R12.8	362	504

Zora S. Mangat 8/7/09
REGISTERED CIVIL ENGINEER DATE

2-1-10
PLANS APPROVAL DATE

REGISTERED PROFESSIONAL ENGINEER
Z. Mangat
No. 44843
Exp. 3-31-10
STATE OF CALIFORNIA

THE STATE OF CALIFORNIA OR ITS OFFICERS OR AGENTS SHALL NOT BE RESPONSIBLE FOR THE ACCURACY OR COMPLETENESS OF SCANNED COPIES OF THIS PLAN SHEET.

HMA DIKE ON NORTHBOUND MAINLINE

STATION	Loc	REMOVE Exist AC DIKE (N)		TYPE C	TYPE D	TYPE F	HOT MIX ASPHALT
		LF					TON
A 3+10 TO 9+00	R†	590			590		35.01
A 14+00 TO 21+30	R†	730					
A 21+30 TO 23+56	R†	226			226		13.41
A 23+56 TO 24+19	R†	63		63			0.48
A 24+19 TO 24+69	R†	50				50	0.67
A 57+05 TO 57+15	R†	10			10		0.59
A 58+50 TO 58+60	R†	10			10		0.59
A4 124+33 TO 125+27	R†	94		94			0.72
A4 125+27 TO 129+00	R†	373					
A4 137+14 TO 137+77	R†	63		63			0.48
A4 137+77 TO BR1 143+58	R†	581				581	7.77
A4 150+47 TO 151+10	R†	63		63			0.48
A4 151+10 TO 152+91	R†	181				181	2.42
A4 174+10 TO 180+90	R†	680			680		40.35
A4 180+90 TO 186+40	R†	550			550		32.63
A4 187+10 TO 191+05	R†	395			395		23.44
A4 192+57 TO 193+20	R†	63					0.48
A4 193+20 TO 193+64	R†	44				44	0.59
A4 195+20 TO 195+34	R†	14			14		0.83
A4 195+34 TO 195+97	R†	63		63			0.48
A4 195+97 TO 195+47	R†	150				150	2.00
A4 197+53 TO 197+78	R†	25		25			0.19
A4 199+25 TO 202+80	R†	355			355		21.06
A4 202+85 TO 207+35	R†	450			450		26.70
A4 227+70 TO 230+80	R†	310			310		18.39
A4 237+80 TO 239+20	R†	140			140		8.31
A4 242+87 TO 243+50	R†	63					0.48
A4 243+50 TO 244+00	R†	50		63		50	0.67
A4 261+00 TO 266+95	R†	595			595		35.30
A4 266+95 TO 267+58	R†	63		63			0.48
A4 267+58 TO 268+14	R†	56				56	0.75
A4 268+14 TO 280+80	R†	1266			1266		75.11
A4 281+20 TO 283+12	R†	192			192		11.39
A4 283+61 TO 284+24	R†	63		63			0.48
A4 284+24 TO 284+99	R†	75				75	1.00
A4 353+76 TO 354+50	R†	74		74			0.57
A4 354+50 TO 354+75	R†	25				25	0.33
A4 356+00 TO 360+00	R†	400			400		23.73
A4 360+50 TO 362+70	R†	220			220		13.05
A3 388+72 TO 390+34	R†	162				162	2.17
A3 395+50 TO 396+25	R†	75		75			0.58
A3 396+25 TO 396+75	R†	50				50	0.67
A3 414+48 TO 415+29	R†		81			81	1.08
A3 415+29 TO 419+75	R†		446		446		26.46
A3 419+75 TO 420+50	R†		75	75			0.58
A3 420+50 TO 420+94	R†		44			44	0.59
A3 424+50 TO 426+80	R†		230		230		13.65
A3 426+80 TO 427+43	R†		63	63			0.48
A3 427+43 TO 429+68	R†		225			225	3.01
A3 431+60 TO 431+73	R†		13		13		0.77
A3 431+73 TO 433+29	R†		156			156	2.08
A3 433+29 TO 436+80	R†		351		351		20.83

HMA DIKE ON NORTHBOUND MAINLINE

STATION	Loc	REMOVE Exist AC DIKE (N)		TYPE C	TYPE D	TYPE F	HOT MIX ASPHALT
		LF					TON
A3 443+70 TO 449+15	R†		545		545		32.34
A3 449+18 TO 452+70	R†		352				20.89
A3 452+90 TO 453+20	R†		30		30		1.78
A3 453+40 TO 459+21	R†		581		581		34.47
A3 459+21 TO 459+83	R†		62	62			0.48
A3 459+83 TO 460+46	R†		63			63	0.84
A3 462+20 TO 465+30	R†		310		310		18.39
A3 471+70 TO 475+80	R†		410		410		24.33
A3 476+10 TO 484+26	R†		816		816		48.42
A3 484+26 TO 485+01	R†		75	75			0.58
A3 485+01 TO 486+76	R†		175			175	2.34
A3 488+57 TO 492+13	R†		356		356		21.12
A3 492+13 TO 507+00	R†		1487		1487		88.23
A4 507+33 TO 508+08	R†		75	75			0.58
A4 508+08 TO 508+58	R†		50			50	0.67
A4 524+27 TO 543+02	R†		75	75			0.58
A4 543+02 TO 546+02	R†		300			300	4.01
A3 564+92 TO 569+98	R†		506			506	6.76
A3 593+74 TO 594+37	R†		63	63			0.48
A3 594+37 TO 594+87	R†		50			50	0.67
A3 597+25 TO 600+55	R†		330		330		19.58
A3 607+70 TO 620+00	R†		1230		1230		72.98
A3 620+00 TO 620+75	R†		75	75			0.58
A3 620+75 TO 621+81	R†		106			106	1.42
A3 621+81 TO 628+42	R†		661		661		39.22
A3 628+42 TO 629+17	R†		75	75			0.58
A3 629+17 TO 630+23	R†		106			106	1.42
A3 630+23 TO 632+05	R†		182		182		10.80
A3 632+20 TO 640+70	R†		850		850		50.43
A4 650+80 TO 651+40	R†		60		60		3.56
A4 651+40 TO 652+15	R†		75	75			0.58
A4 652+15 TO 653+71	R†		156			156	2.08
A4 653+71 TO 654+75	R†		104		104		6.17
A4 657+75 TO 659+50	R†		175		175		10.38
A4 659+50 TO 661+00	R†		150				
A4 661+00 TO 664+47	R†		347		347		20.59
A4 664+50 TO 665+10	R†		63	63			0.48
A4 664+10 TO 665+60	R†		50			50	0.67
SUBTOTAL		9702	12860	1485	15917	3492	1023.86

(N) - NOT A SEPARATE PAY ITEM, FOR INFORMATION ONLY.

SUMMARY OF QUANTITIES

Q-13

STATE OF CALIFORNIA - DEPARTMENT OF TRANSPORTATION
Caltrans® DESIGN
CONSULTANT FUNCTIONAL SUPERVISOR: ARVIND K. GUPTA
CALCULATED-DESIGNED BY: RANJEET SINGH
CHECKED BY: ZORA S. MANGAT
REVISED BY: RS
DATE REVISED: 7/20/09

LAST REVISION 11-24-09 DATE PLOTTED => 04-FEB-2010 TIME PLOTTED => 13:39

Dist	COUNTY	ROUTE	POST MILES TOTAL PROJECT	SHEET No.	TOTAL SHEETS
04	CC	680	0.0/R12.8	363	504

Zora S. Mangat 8/7/09
REGISTERED CIVIL ENGINEER DATE

2-1-10
PLANS APPROVAL DATE

REGISTERED PROFESSIONAL ENGINEER
Z. Mangat
No. 44843
Exp. 3-31-10
CIVIL
STATE OF CALIFORNIA

THE STATE OF CALIFORNIA OR ITS OFFICERS OR AGENTS SHALL NOT BE RESPONSIBLE FOR THE ACCURACY OR COMPLETENESS OF SCANNED COPIES OF THIS PLAN SHEET.

HMA DIKE ON SOUTHBOUND MAINLINE

STATION	Loc	REMOVE Exist AC DIKE (N)		TYPE C	TYPE D	TYPE F	HOT MIX ASPHALT
		LF					TON
A 1+47 TO 2+97	Lt	150				150	2.00
A 2+97 TO 3+60	Lt	63		63			0.48
A 3+60 TO 18+50	Lt	1490			1490		88.41
A 24+45 TO 25+50	Lt	105			105		6.23
A 25+50 TO 26+35	Lt	85		85			0.65
A 26+35 TO A4 52+21	Lt	2586			2586		153.43
A4 52+21 TO 57+21	Lt	500				500	6.68
A4 58+50 TO 58+60	Lt	10			10		0.59
A4 58+68 TO 66+93	Lt	825				825	11.03
A4 66+93 TO 67+68	Lt	75		75			0.58
A4 67+68 TO 75+50	Lt	782			782		46.40
A4 75+50 TO 79+00	Lt	350					
A4 79+00 TO 79+95	Lt	95			95		5.64
A4 87+00 TO 92+00	Lt	500					
A4 92+00 TO 95+31	Lt	331			331		19.64
A4 95+31 TO 99+31	Lt	400				400	5.35
A4 100+88 TO 104+13	Lt	325				325	4.34
A4 104+13 TO 104+88	Lt	75		75			0.58
A4 104+88 TO 108+00	Lt	312			312		18.51
A4 117+00 TO 118+00	Lt	100					
A4 144+40 TO 151+35	Lt	695			695		41.24
A4 151+47 TO 152+72	Lt	125				125	1.67
A4 152+72 TO 153+35	Lt	63		63			0.48
A4 157+50 TO 163+20	Lt	570					
A4 166+44 TO 170+44	Lt	400				400	5.35
A4 170+44 TO 171+07	Lt	63		63			0.48
A4 178+80 TO 186+00	Lt	720			720		42.72
A4 186+34 TO 197+90	Lt	1156			1156		68.59
A4 200+30 TO 201+00	Lt	70				70	0.94
A4 201+00 TO 202+80	Lt	180			180		10.68
A4 207+40 TO 208+50	Lt	110			110		6.53
A4 213+00 TO 215+50	Lt	250					
A4 239+00 TO 245+00	Lt	600					
A4 252+50 TO 255+70	Lt	320			320		18.99
A4 260+85 TO 265+40	Lt	455			455		27.00
A4 267+00 TO 267+87	Lt	87			87		5.16
A4 267+87 TO 268+31	Lt	44				44	0.59
A4 268+31 TO 269+06	Lt	75		75			0.58
A4 269+06 TO 280+88	Lt	1182			1182		70.13
A4 281+23 TO A3 315+16	Lt	3393			3393		201.32
A3 315+16 TO 317+67	Lt	251					
A3 318+80 TO 334+20	Lt	1540					
A3 334+20 TO 337+50	Lt	330			330		19.58
A3 352+56 TO 352+81	Lt	25		25			0.19
A3 357+83 TO 358+08	Lt	25		25			0.19
A3 393+00 TO 397+20	Lt	420			420		24.92
A3 404+60 TO 405+35	Lt		75		75		4.45
DL3A 407+13 TO PL3 426+38	Lt		1925			1925	25.73
A3 424+90 TO 427+70	Lt		280		280		16.61
A3 427+70 TO 430+01	Lt		231			231	3.09
A3 432+15 TO 435+40	Lt		325			325	4.34
A3 435+40 TO 436+15	Lt		75	75			0.58

HMA DIKE ON SOUTHBOUND MAINLINE

STATION	Loc	REMOVE Exist AC DIKE (N)		TYPE C	TYPE D	TYPE F	HOT MIX ASPHALT
		LF					TON
A3 436+15 TO 438+80	Lt		256		256		15.72
A3 454+64 TO 460+14	Lt		550			550	7.35
A3 461+83 TO 462+21	Lt		38			38	0.51
A3 462+21 TO 462+96	Lt		75	75			0.58
A3 462+96 TO 466+35	Lt		339		339		20.11
A3 469+80 TO 486+85	Lt		1705		1705		101.16
A3 587+65 TO 589+50	Lt		185		185		10.98
A3 602+94 TO 603+32	Lt		38			38	0.51
A3 603+32 TO 603+95	Lt		63	63			0.48
A3 603+52 TO 603+77	Lt		25	25			0.19
A3 635+25 TO 637+63	Lt		238			238	3.18
A3 637+63 TO 638+38	Lt		75	75			0.58
A3 638+38 TO 646+80	Lt		842		842		49.96
A4 646+80 TO R1 665+10	Lt		1840			1840	24.59
A4 671+36 TO 672+61	Lt		125	75		125	1.67
A4 672+61 TO 673+24	Lt		63	63			0.48
SUBTOTAL		22308	9368	1000	18441	8149	1210.71

(N) - NOT A SEPARATE PAY ITEM, FOR INFORMATION ONLY.

SUMMARY OF QUANTITIES

Q-14

STATE OF CALIFORNIA - DEPARTMENT OF TRANSPORTATION
Caltrans DESIGN

CONSULTANT FUNCTIONAL SUPERVISOR: ARVIND K. GUPTA
CALCULATED-DESIGNED BY: RANJEET SINGH
CHECKED BY: ZORA S. MANGAT
REVISED BY: RS
DATE REVISED: 7/20/09

LAST REVISION 11-24-09
DATE PLOTTED => 04-FEB-2010
TIME PLOTTED => 13:41

Dist	COUNTY	ROUTE	POST MILES TOTAL PROJECT	SHEET No.	TOTAL SHEETS
04	CC	680	0.0/R12.8	364	504

Zora S. Mangat 8/7/09
REGISTERED CIVIL ENGINEER DATE

2-1-10
PLANS APPROVAL DATE

REGISTERED PROFESSIONAL ENGINEER
Z. Mangat
No. 44843
Exp. 3-31-10
CIVIL
STATE OF CALIFORNIA

THE STATE OF CALIFORNIA OR ITS OFFICERS OR AGENTS SHALL NOT BE RESPONSIBLE FOR THE ACCURACY OR COMPLETENESS OF SCANNED COPIES OF THIS PLAN SHEET.

HMA DIKE ON SOUTH BOUND RAMPS

STATION	Loc	REMOVE Exist AC DIKE	TYPE C	TYPE E	TYPE F	HOT MIX ASPHALT
			LF			TON
SR1 571+47 TO 572+06	Lt	59			59	0.79
SR1 572+06 TO 572+81	Lt	75	75			0.58
BL1 143+00 TO 153+52	Lt	1052		1052		27.69
BR2 154+00 TO 161+00	Lt	700				
BL3 161+00 TO 163+40	Lt	240			240	3.21
BL3 163+40 TO 164+15	Lt	75	75			0.58
BL3 164+15 TO 166+79	Lt	264		264		6.95
CL1A 224+00 TO 233+75	Lt	975		975		25.67
VL1 350+50 TO 357+50	Lt	700		700		18.43
VL5A 357+90 TO 360+40	Rt	250			250	3.34
VL2 362+10 TO 364+00	Lt	190		190		5.00
VL2 356+50 TO 364+10	Rt	760		760		20.01
DL2 393+69 TO 395+07	Lt	138			138	1.84
DL2 395+07 TO 395+82	Lt	75	75			0.58
DL2 395+82 TO 397+10	Lt	128		128		3.37
DL3A 399+65 TO 402+40	Lt	275	275			2.12
PL3 424+50 TO 429+00	Rt	450		450		11.85
PL3 426+38 TO 427+13	Lt	75	75			0.58
PL3 427+13 TO 429+00	Lt	187		187		4.92
PL4 433+56 TO 439+10	Lt	554		554		14.58
PL4 439+10 TO 439+73	Lt	63			63	0.84
PL4 439+73 TO 440+48	Lt	75	75			0.58
PL4 440+48 TO 442+36	Lt	188		188		4.95
EL2 462+10 TO 469+80	Lt	770		770		20.27
GL4 538+80 TO 546+50	Lt	770		770		20.27
GL5 548+78 TO 549+53	Rt	75			75	1.00
GL5 549+53 TO 556+70	Rt	717		717		18.88
GL6 546+50 TO 553+40	Lt	690		690		18.16
LL3 591+30 TO 592+00	Lt	70			70	0.94
LL4 597+30 TO 599+00	Lt	170		170		4.48
LL4 599+00 TO 601+73	Lt	273			273	3.65
LL4 601+73 TO 602+36	Lt	63	63			0.48
LL4 606+00 TO 607+00	Lt	100		100		2.63
SUBTOTAL		11246	713	8665	1168	249.20

HMA DIKE ON NORTH BOUND RAMPS

STATION	Loc	REMOVE Exist AC DIKE	TYPE C	TYPE E	TYPE F	HOT MIX ASPHALT
			LF			TON
DR2 573+56 TO 574+19	Rt	63	63			0.48
DR2 574+19 TO 574+69	Rt	50			50	0.67
BR1 143+58 TO 144+80	Rt	122		122		3.21
BR2 151+16 TO 158+80	Rt	764		764		20.11
CR1 208+05 TO 219+80	Rt	1175		1175		30.93
CR2A 223+00 TO 240+10	Rt	1710		1710		45.02
VR6B 346+84 TO 347+47	Rt	63	63			0.48
VR6B 347+47 TO 349+16	Rt	169			169	2.26
VR6B 349+10 TO 354+00	Rt	490		490		12.90
VR4 355+90 TO 362+28	Rt	638			638	8.53
VR4 362+28 TO 363+15	Rt	87	87			0.67
DR3 398+00 TO 399+00	Lt	100		100		2.63
DR3 400+00 TO 403+00	Lt	300				
DR4 400+05 TO 400+80	Rt	75	75			0.58
DR4 400+80 TO 402+68	Rt	188			188	2.51
PR3 420+94 TO 428+00	Rt	706		720		18.95
PR4 431+90 TO 443+70	Rt	1180		1180		31.06
ER2 462+80 TO A3 471+70	Rt	890		890		23.43
GR5 548+00 TO 550+86	Rt	286			286	3.83
GR5 550+86 TO 557+80	Rt	694		694		18.27
GR6 548+20 TO 549+00	Rt	80		80		2.11
GR6 556+00 TO 558+20	Rt	220		220		5.79
LR5 590+30 TO 594+10	Rt	380		380		10.00
LR2 599+00 TO LR4 602+00	Rt	300		300		7.90
LR4 602+00 TO A3 607+60	Rt	560		560		14.74
SUBTOTAL		11290	288	9385	1331	267.07

NOTES:

1. THE LIMITS OF AC DIKES ARE APPROXIMATE.
2. THE CONTRACTOR NEEDS TO IDENTIFY/REFERENCE THE LIMITS OF EXISTING AC DIKES PRIOR TO REMOVAL FOR ACCURATE REINSTALLATION.

SUMMARY OF QUANTITIES

Q-15

STATE OF CALIFORNIA - DEPARTMENT OF TRANSPORTATION
Caltrans
DESIGN

CONSULTANT FUNCTIONAL SUPERVISOR: ARVIND K. GUPTA
CALCULATED-DESIGNED BY: ZORA S. MANGAT
CHECKED BY: RANJEET SINGH
REVISED BY: RS
DATE REVISED: 7/20/09

LAST REVISION 12-07-09
DATE PLOTTED => 04-FEB-2010
TIME PLOTTED => 13:43

Dist	COUNTY	ROUTE	POST MILES TOTAL PROJECT	SHEET No.	TOTAL SHEETS
04	CC	680	0.0/12.6	365	504

Zora S. Mangat 8/7/09
REGISTERED CIVIL ENGINEER DATE

2-1-10
PLANS APPROVAL DATE

REGISTERED PROFESSIONAL ENGINEER
Z. Mangat
No. 44843
Exp. 3-31-10
CIVIL
STATE OF CALIFORNIA

THE STATE OF CALIFORNIA OR ITS OFFICERS OR AGENTS SHALL NOT BE RESPONSIBLE FOR THE ACCURACY OR COMPLETENESS OF SCANNED COPIES OF THIS PLAN SHEET.

NOTES:

1. THE CONTRACTOR NEEDS TO IDENTIFY REFERENCE THE LIMITS OF EXISTING DIKE PRIOR TO REMOVAL FOR ACCURATE REINSTALLATION.

2. SEE L-SHEETS FOR LOCATION OF HMA DIKES.

HOT MIX ASPHALT DIKE

LOCATION	REMOVE Exist AC DIKE (N)		TYPE C	TYPE D	TYPE E	TYPE F	HOT MIX ASPHALT *
	LF						TON
SUBTOTAL NB (MAIN LINE)	9702	12860	1485	15917		3492	1023.86
SUBTOTAL SB (MAIN LINE)	22308	9368	1000	18441		8149	1210.71
SUBTOTAL NB (RAMPS)		11290	288		9385	1331	267.07
SUBTOTAL SB (RAMPS)		11246	713		8665	1168	249.30
TOTAL	32010	44764	3486	34358	18050	14140	2750.94

(N) = NOT A SEPARATE PAY ITEM, FOR INFORMATION ONLY.
* SEE SHEET Q-5 FOR TOTAL HMA QUANTITY

SUMMARY OF QUANTITIES

Q-16

REVISED BY	RS
DATE REVISED	7/20/09
CALCULATED-DESIGNED BY	RANJEET SINGH
CHECKED BY	ZORA S. MANGAT
CONSULTANT FUNCTIONAL SUPERVISOR	ARVIND K. GUPTA

STATE OF CALIFORNIA - DEPARTMENT OF TRANSPORTATION
Caltrans
DESIGN

LAST REVISION 12-08-09
DATE PLOTTED => 04-FEB-2010
TIME PLOTTED => 13:54

Dist	COUNTY	ROUTE	POST MILES TOTAL PROJECT	SHEET No.	TOTAL SHEETS
04	CC	680	0.0/12.6	366	504

REGISTERED ELECTRICAL ENGINEER 8-3-09 DATE

2-1-10
PLANS APPROVAL DATE

REGISTERED PROFESSIONAL ENGINEER Mahmood Noii No. 13717 Exp 6-30-11 ELECT STATE OF CALIFORNIA

THE STATE OF CALIFORNIA OR ITS OFFICERS OR AGENTS SHALL NOT BE RESPONSIBLE FOR THE ACCURACY OR COMPLETENESS OF SCANNED COPIES OF THIS PLAN SHEET.

GENERAL NOTES:

1. THE CONTRACTOR SHALL PROVIDE TWO REPORTS PER LOCATION ON THE STATUS OF EACH DETECTOR LOOP REPLACEMENT SHOWING CONTINUITY AND INSULATION RESISTANCE READINGS. THE REPORTS SHALL BE SUBMITTED TO THE ENGINEER, ONE BEFORE STARTING WORK AND THE OTHER AFTER WORK HAS BEEN COMPLETED AT EACH LOCATION.

2. SLOT CUTTING FOR HIGH SPEED WEIGH-IN-MOTION INDUCTIVE DETECTOR LOOPS SHALL NOT BE PERFORMED UNTIL AFTER THE PAVEMENT HAS BEEN GROUND, STRAIGHTEDGED AND BROUGHT INTO TOLERANCE AS PROVIDED IN THE SPECIAL PROVISIONS.

PROJECT NOTES:

1. EXISTING CCTV MOUNTED ON POLE.
2. EXISTING CCTV MOUNTED ON SIGN STRUCTURE.
3. EXISTING MODEL 334 CABINET WITH EQUIPMENT.
4. EXISTING 1½"C, 1-tvc, 1-tvl
5. EXISTING 1½"C, 1-tvp, 1-tvcp
6. EXISTING 3"C, 1-tvc, 1-tvl, 1-tvp, 1-tvcp
7. AB EXISTING DETECTORS AND INSTALL NEW LOOP DETECTORS. SEE ELECTRICAL DETAILS ON E-60. SPLICE NEW LOOP CONDUCTORS TO CORRESPONDING dlc IN TERMINATION PULL BOX. VERIFY IDENTIFICATION OF EXISTING dlc BEFORE CONNECTING TO THE CORRESPONDING LOOP DETECTORS.
8. RC EXISTING No. 6 (T) PULL BOX AND INSTALL No. 6 (T) PULL BOX.
9. EXISTING TRUNKLINE SPLICE CABINET.
10. EXISTING 3"C, mt.
11. NOT USED.
12. EXISTING 3"C, 1-ftc
13. AB EXISTING LOOP DETECTORS. RC EXISTING wim EMBEDDED AXLE SENSORS AND wim SCALE.
14. RC EXISTING No. 6 (T) PULL BOX AND INSTALL FIBER OPTIC PULL BOX. SEE E-61 FOR DETAILS.
15. EXISITNG 3-3"C, mt (TRUNKLINE PVC).
16. INSTALL NEW LOOP DETECTORS, WIM EMBEDDED AXLE SENSORS AND WIM SCALE. SEE E-58 AND E-59 FOR DETAILS. SEE THIS SHEET FOR WIM SCALE AND DETECTOR IDENTIFICATION LABELLING.
17. TO THE REST OF THE ELECTRICAL SYSTEM
18. FUTURE RAMP METERING DETECTORS
19. FUTURE QUEUE DETECTOR
20. EXISTING 1½"C, 2#6 (480 V LIGHTING)
    2#8 (480 V SIGN ILLUMINATION)
    2#14 (240 V SIGN TEST SWITCH)
21. 1½"C, 2#6 (480 V LIGHTING)
    2#8 (480 V SIGN ILLUMINATION)
    2#14 (240 V SIGN TEST SWITCH)
22. EXISTING 1½"C, 2#6 (480 V LIGHTING)
23. 1½"C, 2#6 (480 V LIGHTING)
24. 2#12 (480 V SPRINKLER CONTROL)
25. 1½"C, 2#8 (480 V SIGN ILLUMINATION)
    2#14 (240 V SIGN TEST SWITCH)
26. EXISTING 1½"C, 2#8 (480 V SIGN ILLUMINATION)
    2#14 (240 V SIGN TEST SWITCH)
27. INSTALL PULL BOX ADJACENT TO MEDIAN BARRIER.

ABBREVIATIONS:

PROPOSED	EXISTING	
	fpc	FIBER OPTIC PIGTAIL CABLE (12 SM FIBERS)
	ftc	FIBER OPTIC COMMUNICATION TRUNKLINE CABLE (72 SM FIBERS)
	tsc	TRUNKLINE SPLICE CABINET
	tvc	TELEVISION CONTROL CABLE (15#18)
	tvcp	TELEVISION CONTROL POWER CABLE (12#18)
	tvl	TELEVISION VIDEO CABLE (COAXIAL VIDEO CABLE)
	tvp	TELEVISION POWER CONDUCTORS (3#14)
WIM	wim	WEIGH-IN-MOTION
STC	stc	SCREENED TRANSMISSION CABLE
SLC	slc	SCALE LEAD-IN CABLE
	sm	SINGLEMODE

ELECTRICAL INDEX

E-1	LIGHTING AND SIGN ILLUMINATION, TRAFFIC OPERATIONS SYSTEM ELECTRICAL INDEX, NOTES, LEGEND AND SYMBOLS
E-2	LOOP DETECTOR REPLACEMENT (NOTES AND LEGEND)
E-3 TO E-17	LIGHTING AND SIGN ILLUMINATION
E-18 TO E-54	TRAFFIC OPERATIONS SYSTEM
E-55	HIGH SPEED WEIGH-IN-MOTION SYSTEM
E-56 TO E-57	LOOP DETECTOR REPLACEMENT (TRAFFIC SIGNAL)
E-58 TO E-61	ELECTRICAL DETAILS

SYMBOLS

PROPOSED EXISTING

WEIGH-IN-MOTION SCALE

WIM SCALE IDENTIFICATION NUMBER

WS-1, 2, 3, 4
WN-1, 2, 3, 4

ELECTRICAL INDEX, NOTES, LEGEND AND SYMBOLS

E-1

REVISED BY | DATE REVISED
PIERRE LASSALLE | MAHMOOD NOII
CALCULATED-DESIGNED BY | CHECKED BY
FUNCTIONAL SUPERVISOR | LAI HONG CHIU
STATE OF CALIFORNIA - DEPARTMENT OF TRANSPORTATION
Caltrans
ELECTRICAL

LAST REVISION 10-06-09 | DATE PLOTTED => 04-FEB-2010 | TIME PLOTTED => 13:54

Dist	COUNTY	ROUTE	POST MILES TOTAL PROJECT	SHEET No.	TOTAL SHEETS
04	CC	680	0.0/12.6	367	504

REGISTERED ELECTRICAL ENGINEER 8-3-09 DATE

2-1-10
PLANS APPROVAL DATE

REGISTERED PROFESSIONAL ENGINEER Mahmood Noii No. 13717 Exp 6-30-11 ELECT STATE OF CALIFORNIA

THE STATE OF CALIFORNIA OR ITS OFFICERS OR AGENTS SHALL NOT BE RESPONSIBLE FOR THE ACCURACY OR COMPLETENESS OF SCANNED COPIES OF THIS PLAN SHEET.

GENERAL NOTES:

1. VERIFY EXACT LOCATION OF EACH EXISTING DETECTOR, PULL BOX AND dlc, INCLUDING EACH LOOP CONDUCTOR SPLICE TO dlc AS FIRST ORDER OF WORK.
2. ABANDON THE EXISTING DETECTORS AS INDICATED IN THE CHARTS SHOWN ON E-56 TO E-57. INSTALL NEW DETECTORS IN KIND.
3. POST MILE IS NOT TO BE USED TO DETERMINE DETECTOR LOOP LOCATIONS.
4. RC EXISTING DETECTOR HANDHOLES INDICATED IN THE CHARTS SHOWN ON E-56 TO E-57. INSTALL NEW DETECTOR HANDHOLES AS INDICATED.
5. SPLICE NEW LOOP CONDUCTORS TO CORRESPONDING DLC IN TERMINATION PULL BOX. VERIFY IDENTIFICATION OF EXISTING dlc BEFORE CONNECTING TO THE CORRESPONDING LOOP DETECTORS.
6. CONTRACTOR SHALL TAG ALL THE AFFECTED EXISTING PULL BOXES WITHIN THE PROJECT LIMITS PRIOR TO PAVING. EXISTING PULL BOXES SHALL BE REPLACED WITH THE No. 5 (T) OR No. 6 (T) IN THE PAVED AREAS AND THE No. 5 OR No. 6 IN ALL OTHER AREAS. TOP OF PULL BOXES SHALL BE FLUSHED WITH FINISHED GRADE. WORK TO BE DONE SHALL BE PAID AS A ROADWAY BID ITEM.
7. SEE SHEETS E-56 AND E-57 FOR LOCATIONS.

ABBREVIATION:

ETW EDGE OF TRAVELED WAY

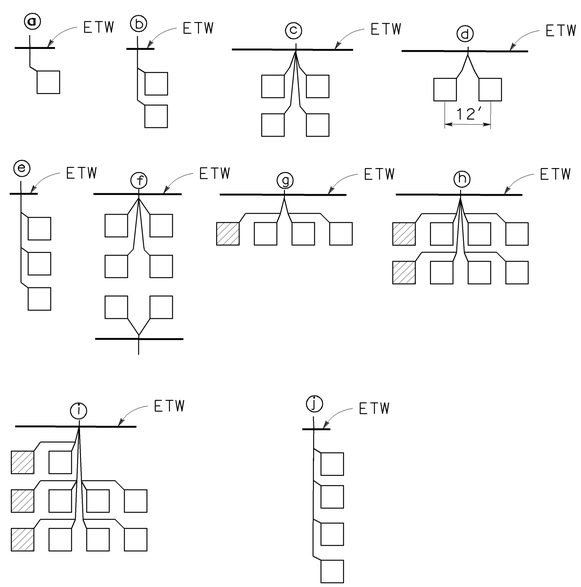

TYPICAL DETECTOR CONFIGURATIONS
DETAIL A

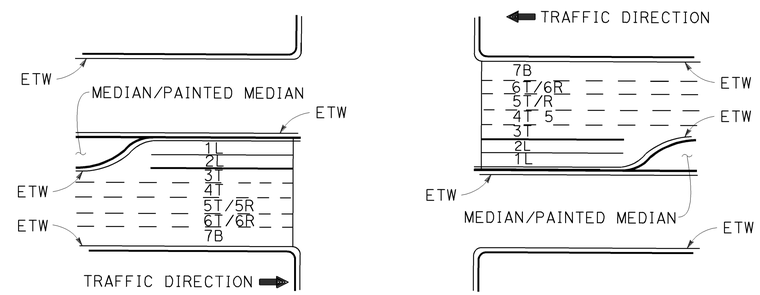

LANE CONFIGURATION
TRAFFIC SIGNAL
(TYPICAL)

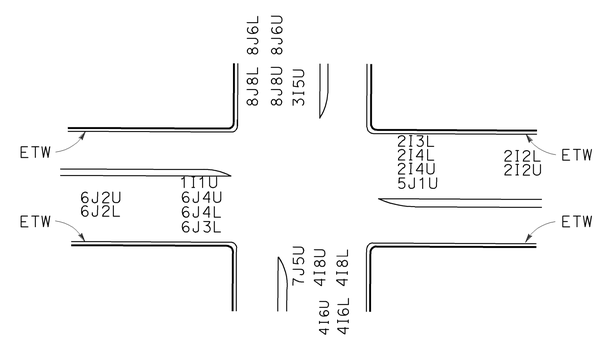

DETECTOR IDENTIFICATION
(TYPICAL)

LANE DESCRIPTION

NUMBER OF LANES FROM LEFT WITH RESPECT TO TRAFFIC DIRECTION

1= FIRST LANE FROM LEFT
2= SECOND LANE FROM LEFT
3= THIRD LANE FROM LEFT
4= FOURTH LANE FROM LEFT
5= FIFTH LANE FROM LEFT
T= THROUGH TRAFFIC MOVEMENT
L= LEFT TURN TRAFFIC MOVEMENT
R= RIGHT TURN TRAFFIC MOVEMENT
B= BICYCLE LANE

LOOP DETECTOR REPLACEMENT
(NOTES AND LEGEND)

E-2

STATE OF CALIFORNIA - DEPARTMENT OF TRANSPORTATION
Caltrans
ELECTRICAL

FUNCTIONAL SUPERVISOR: LAI HONG CHIU
CALCULATED-DESIGNED BY: HAWA GARDIZI
CHECKED BY: PIERRE LASSALLE
REVISED BY
DATE REVISED

LAST REVISION 10-06-09
DATE PLOTTED => 04-FEB-2010
TIME PLOTTED => 13:54

Dist	COUNTY	ROUTE	POST MILES TOTAL PROJECT	SHEET No.	TOTAL SHEETS
04	CC	680	0.0/12.6	368	504

REGISTERED ELECTRICAL ENGINEER 8-3-09 DATE

2-1-10
PLANS APPROVAL DATE

REGISTERED PROFESSIONAL ENGINEER Mahmood Noii No. 13717 Exp 6-30-11 ELECT STATE OF CALIFORNIA

THE STATE OF CALIFORNIA OR ITS OFFICERS OR AGENTS SHALL NOT BE RESPONSIBLE FOR THE ACCURACY OR COMPLETENESS OF SCANNED COPIES OF THIS PLAN SHEET.

NOTE:

FOR ACCURATE RIGHT OF WAY DATA, CONTACT RIGHT OF WAY ENGINEERING AT THE DISTRICT OFFICE.

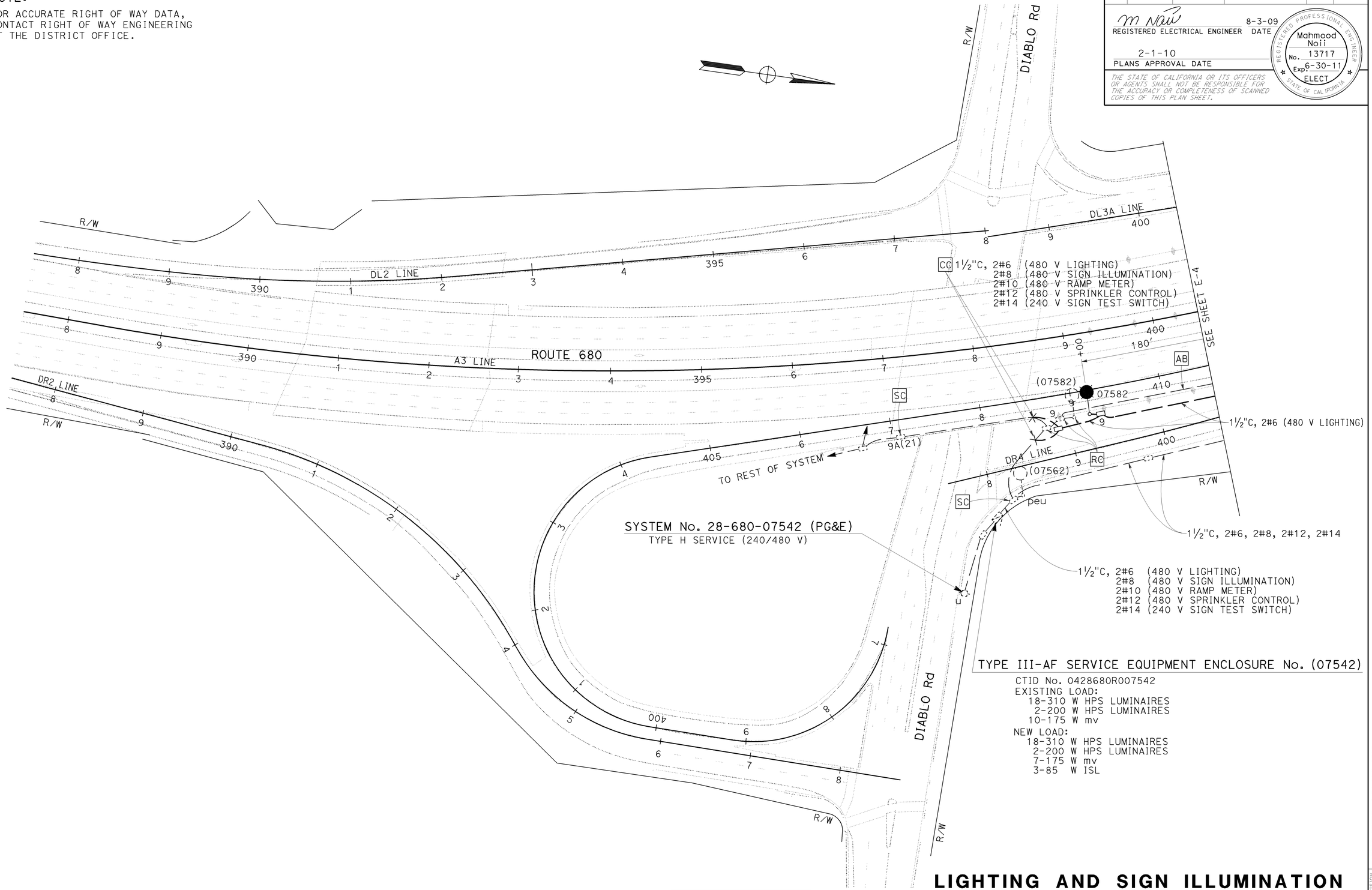

TYPE III-AF SERVICE EQUIPMENT ENCLOSURE No. (07542)

CTID No. 0428680R007542
EXISTING LOAD:
18-310 W HPS LUMINAIRES
2-200 W HPS LUMINAIRES
10-175 W mv
NEW LOAD:
18-310 W HPS LUMINAIRES
2-200 W HPS LUMINAIRES
7-175 W mv
3-85 W ISL

THIS PLAN IS ACCURATE FOR ELECTRICAL WORK ONLY

FOR NOTES, ABBREVIATIONS AND LEGEND, SEE SHEET E-1

LIGHTING AND SIGN ILLUMINATION

SCALE: 1" = 50'

E-3

STATE OF CALIFORNIA - DEPARTMENT OF TRANSPORTATION
Caltrans
ELECTRICAL

FUNCTIONAL SUPERVISOR: LAI HONG CHIU
CALCULATED-DESIGNED BY: PIERRE LASSALLE
CHECKED BY: MAHMOOD NOII
REVISED BY
DATE REVISED

LAST REVISION 10-06-09 DATE PLOTTED => 04-FEB-2010 TIME PLOTTED => 13:55

Dist	COUNTY	ROUTE	POST MILES TOTAL PROJECT	SHEET No.	TOTAL SHEETS
04	CC	680	0.0/12.6	369	504

REGISTERED ELECTRICAL ENGINEER 8-3-09 DATE

2-1-10
PLANS APPROVAL DATE

REGISTERED PROFESSIONAL ENGINEER Mahmood Noii No. 13717 Exp 6-30-11 ELECT STATE OF CALIFORNIA

THE STATE OF CALIFORNIA OR ITS OFFICERS OR AGENTS SHALL NOT BE RESPONSIBLE FOR THE ACCURACY OR COMPLETENESS OF SCANNED COPIES OF THIS PLAN SHEET.

NOTE:
FOR ACCURATE RIGHT OF WAY DATA, CONTACT RIGHT OF WAY ENGINEERING AT THE DISTRICT OFFICE.

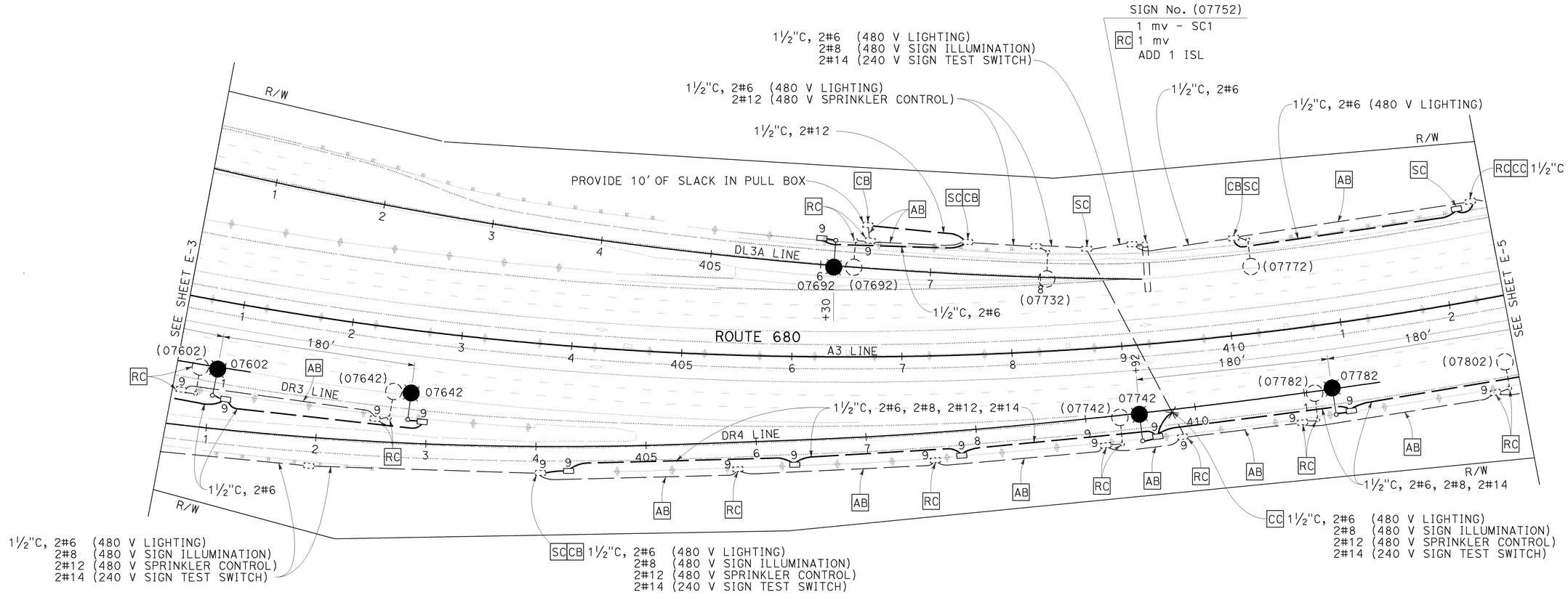

THIS PLAN IS ACCURATE FOR ELECTRICAL WORK ONLY

FOR NOTES, ABBREVIATIONS AND LEGEND, SEE SHEET E-1

LIGHTING AND SIGN ILLUMINATION

SCALE: 1" = 50'

E-4

STATE OF CALIFORNIA - DEPARTMENT OF TRANSPORTATION
Caltrans
ELECTRICAL

FUNCTIONAL SUPERVISOR: LAI HONG CHIU

CALCULATED-DESIGNED BY: PIERRE LASSALLE
CHECKED BY: MAHMOOD NOII

REVISED BY / DATE REVISED

LAST REVISION 10-06-09
DATE PLOTTED => 04-FEB-2010
TIME PLOTTED => 13:55

Dist	COUNTY	ROUTE	POST MILES TOTAL PROJECT	SHEET No.	TOTAL SHEETS
04	CC	680	0.0/12.6	370	504

REGISTERED ELECTRICAL ENGINEER 8-3-09 DATE

2-1-10
PLANS APPROVAL DATE

REGISTERED PROFESSIONAL ENGINEER Mahmood Noii No. 13717 Exp. 6-30-11 ELECT STATE OF CALIFORNIA

THE STATE OF CALIFORNIA OR ITS OFFICERS OR AGENTS SHALL NOT BE RESPONSIBLE FOR THE ACCURACY OR COMPLETENESS OF SCANNED COPIES OF THIS PLAN SHEET.

NOTE:
FOR ACCURATE RIGHT OF WAY DATA, CONTACT RIGHT OF WAY ENGINEERING AT THE DISTRICT OFFICE.

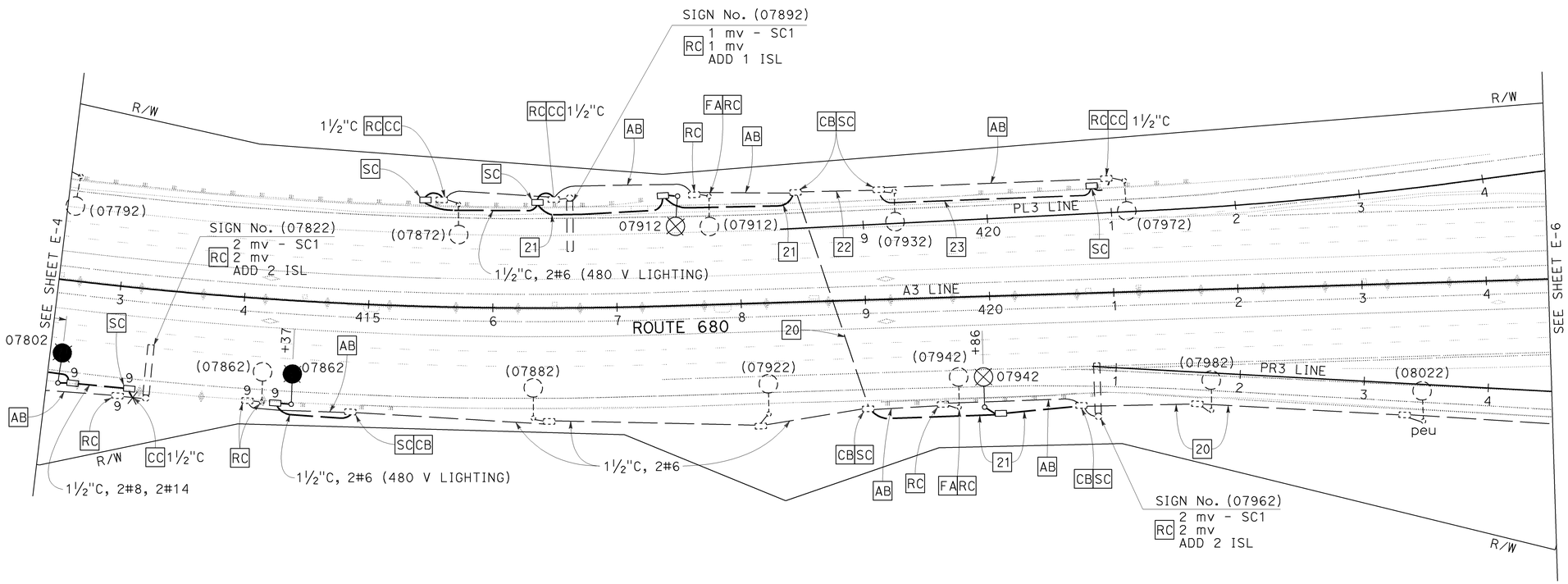

THIS PLAN IS ACCURATE FOR ELECTRICAL WORK ONLY

FOR NOTES, ABBREVIATIONS AND LEGEND, SEE SHEET E-1

LIGHTING AND SIGN ILLUMINATION

SCALE: 1" = 50'

E-5

STATE OF CALIFORNIA - DEPARTMENT OF TRANSPORTATION
Caltrans
ELECTRICAL

FUNCTIONAL SUPERVISOR: LAI HONG CHIU
CALCULATED-DESIGNED BY: PIERRE LASSALLE
CHECKED BY: MAHMOOD NOII
REVISED BY
DATE REVISED

LAST REVISION 07-22-09
DATE PLOTTED => 04-FEB-2010
TIME PLOTTED => 13:55

Dist	COUNTY	ROUTE	POST MILES TOTAL PROJECT	SHEET No.	TOTAL SHEETS
04	CC	680	0.0/12.6	371	504

REGISTERED ELECTRICAL ENGINEER 8-3-09 DATE

2-1-10
PLANS APPROVAL DATE

REGISTERED PROFESSIONAL ENGINEER Mahmood Noii No. 13717 Exp. 6-30-11 ELECT STATE OF CALIFORNIA

THE STATE OF CALIFORNIA OR ITS OFFICERS OR AGENTS SHALL NOT BE RESPONSIBLE FOR THE ACCURACY OR COMPLETENESS OF SCANNED COPIES OF THIS PLAN SHEET.

NOTE:

FOR ACCURATE RIGHT OF WAY DATA, CONTACT RIGHT OF WAY ENGINEERING AT THE DISTRICT OFFICE.

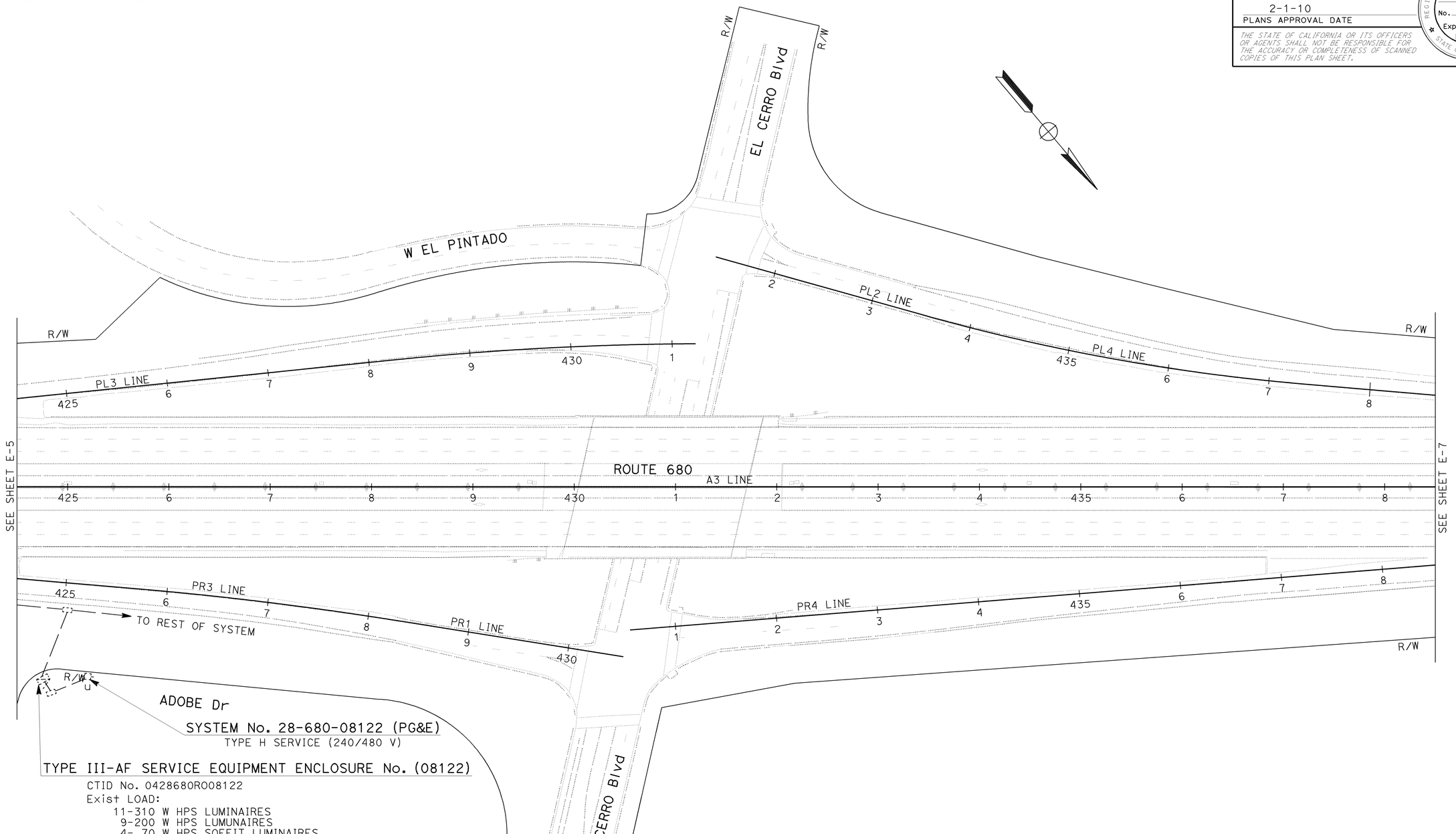

THIS PLAN IS ACCURATE FOR ELECTRICAL WORK ONLY

FOR NOTES, ABBREVIATIONS AND LEGEND, SEE SHEET E-1

LIGHTING AND SIGN ILLUMINATION

SCALE: 1" = 50'

E-6

STATE OF CALIFORNIA - DEPARTMENT OF TRANSPORTATION

Caltrans

ELECTRICAL

FUNCTIONAL SUPERVISOR: LAI HONG CHIU

CALCULATED-DESIGNED BY: PIERRE LASSALLE

CHECKED BY: MAHMOOD NOII

REVISED BY

DATE REVISED

LAST REVISION 07-13-09

DATE PLOTTED => 04-FEB-2010

TIME PLOTTED => 13:55

Dist	COUNTY	ROUTE	POST MILES TOTAL PROJECT	SHEET No.	TOTAL SHEETS
04	CC	680	0.0/12.6	372	504

REGISTERED ELECTRICAL ENGINEER 8-3-09 DATE

2-1-10
PLANS APPROVAL DATE

REGISTERED PROFESSIONAL ENGINEER Mahmood Noii No. 13717 Exp 6-30-11 ELECT STATE OF CALIFORNIA

THE STATE OF CALIFORNIA OR ITS OFFICERS OR AGENTS SHALL NOT BE RESPONSIBLE FOR THE ACCURACY OR COMPLETENESS OF SCANNED COPIES OF THIS PLAN SHEET.

NOTE:

FOR ACCURATE RIGHT OF WAY DATA, CONTACT RIGHT OF WAY ENGINEERING AT THE DISTRICT OFFICE.

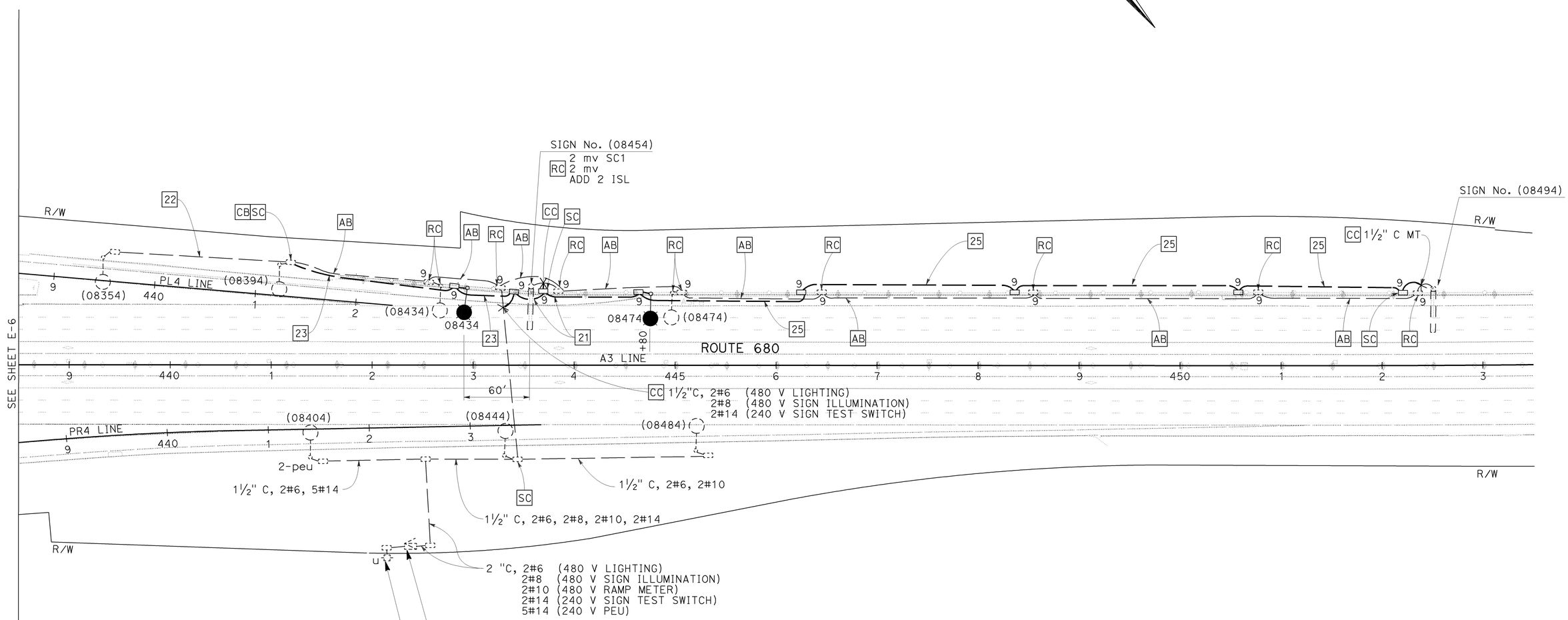

TYPE III-AF SERVICE EQUIPMENT ENCLOSURE No. (08424)

CTID No. 0428680R008424
Exist LOAD: 7-310 W HPS LUMINAIRES
2-175 W mv
NEW LOAD: 7-310 W HPS LUMINAIRES
2- 85 W ISL

SYSTEM No. 28-680-08424 (PG&E)

TYPE H SERVICE (240/480 V)

THIS PLAN IS ACCURATE FOR ELECTRICAL WORK ONLY

FOR NOTES, ABBREVIATIONS AND LEGEND, SEE SHEET E-1

LIGHTING AND SIGN ILLUMINATION

SCALE: 1" = 50'

E-7

STATE OF CALIFORNIA - DEPARTMENT OF TRANSPORTATION
Caltrans
ELECTRICAL

FUNCTIONAL SUPERVISOR: LAI HONG CHIU
CALCULATED-DESIGNED BY: PIERRE LASSALLE
CHECKED BY: MAHMOOD NOII
REVISED BY
DATE REVISED

LAST REVISION 10-06-09 DATE PLOTTED => 16-FEB-2010 TIME PLOTTED => 11:04

Dist	COUNTY	ROUTE	POST MILES TOTAL PROJECT	SHEET No.	TOTAL SHEETS
04	CC	680	0.0/12.6	373	504

REGISTERED ELECTRICAL ENGINEER 8-3-09 DATE

2-1-10
PLANS APPROVAL DATE

REGISTERED PROFESSIONAL ENGINEER Mahmood Noii No. 13717 Exp. 6-30-11 ELECT STATE OF CALIFORNIA

THE STATE OF CALIFORNIA OR ITS OFFICERS OR AGENTS SHALL NOT BE RESPONSIBLE FOR THE ACCURACY OR COMPLETENESS OF SCANNED COPIES OF THIS PLAN SHEET.

NOTE:
FOR ACCURATE RIGHT OF WAY DATA, CONTACT RIGHT OF WAY ENGINEERING AT THE DISTRICT OFFICE.

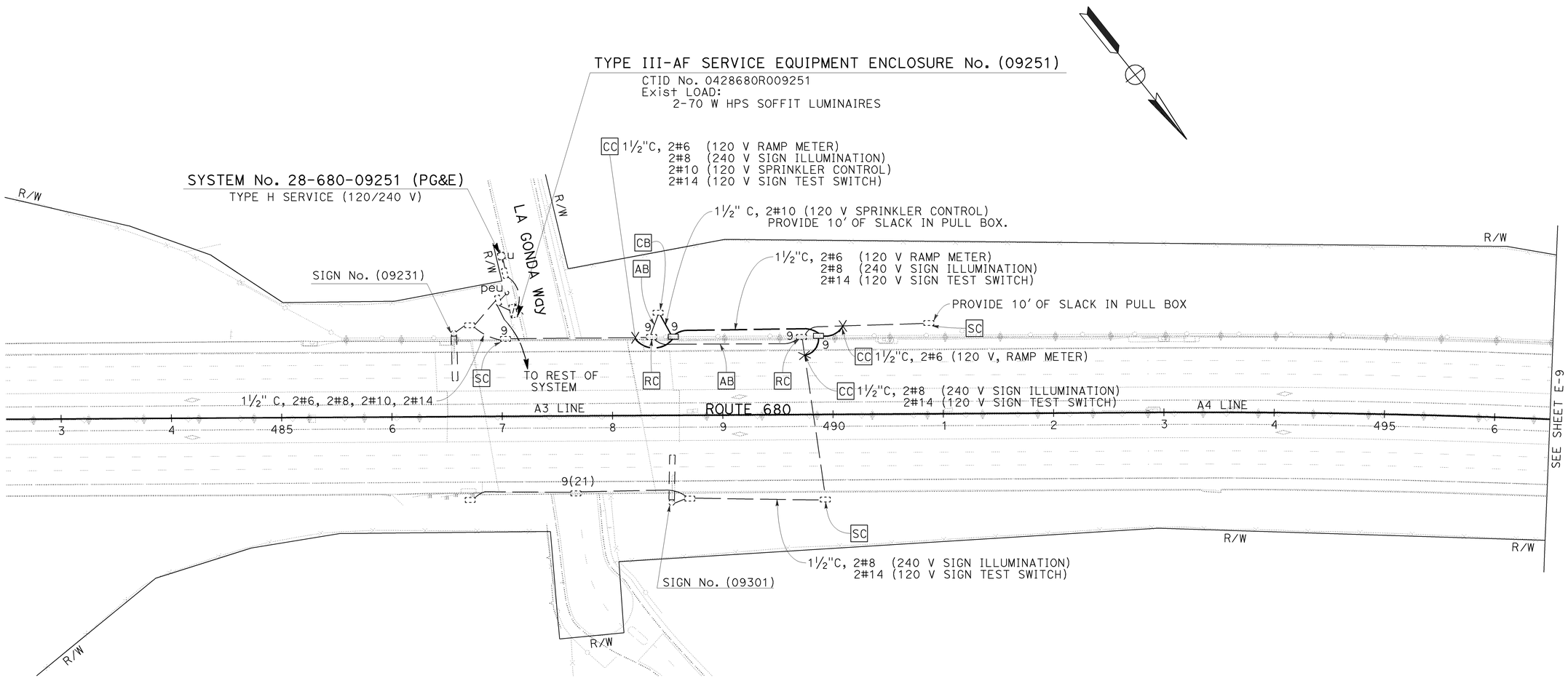

THIS PLAN IS ACCURATE FOR ELECTRICAL WORK ONLY

FOR NOTES, ABBREVIATIONS AND LEGEND, SEE SHEET E-1

LIGHTING AND SIGN ILLUMINATION

SCALE: 1" = 50'

E-8

STATE OF CALIFORNIA - DEPARTMENT OF TRANSPORTATION
Caltrans®
ELECTRICAL

FUNCTIONAL SUPERVISOR: LAI HONG CHIU
CALCULATED-DESIGNED BY: PIERRE LASSALLE
CHECKED BY: MAHMOOD NOII
REVISED BY
DATE REVISED

LAST REVISION DATE PLOTTED => 04-FEB-2010
TIME PLOTTED => 13:55
10-07-09

Dist	COUNTY	ROUTE	POST MILES TOTAL PROJECT	SHEET No.	TOTAL SHEETS
04	CC	680	0.0/12.6	374	504

REGISTERED ELECTRICAL ENGINEER 8-3-09 DATE

2-1-10
PLANS APPROVAL DATE

REGISTERED PROFESSIONAL ENGINEER Mahmood Noii No. 13717 Exp. 6-30-11 ELECT STATE OF CALIFORNIA

THE STATE OF CALIFORNIA OR ITS OFFICERS OR AGENTS SHALL NOT BE RESPONSIBLE FOR THE ACCURACY OR COMPLETENESS OF SCANNED COPIES OF THIS PLAN SHEET.

NOTE:
FOR ACCURATE RIGHT OF WAY DATA, CONTACT RIGHT OF WAY ENGINEERING AT THE DISTRICT OFFICE.

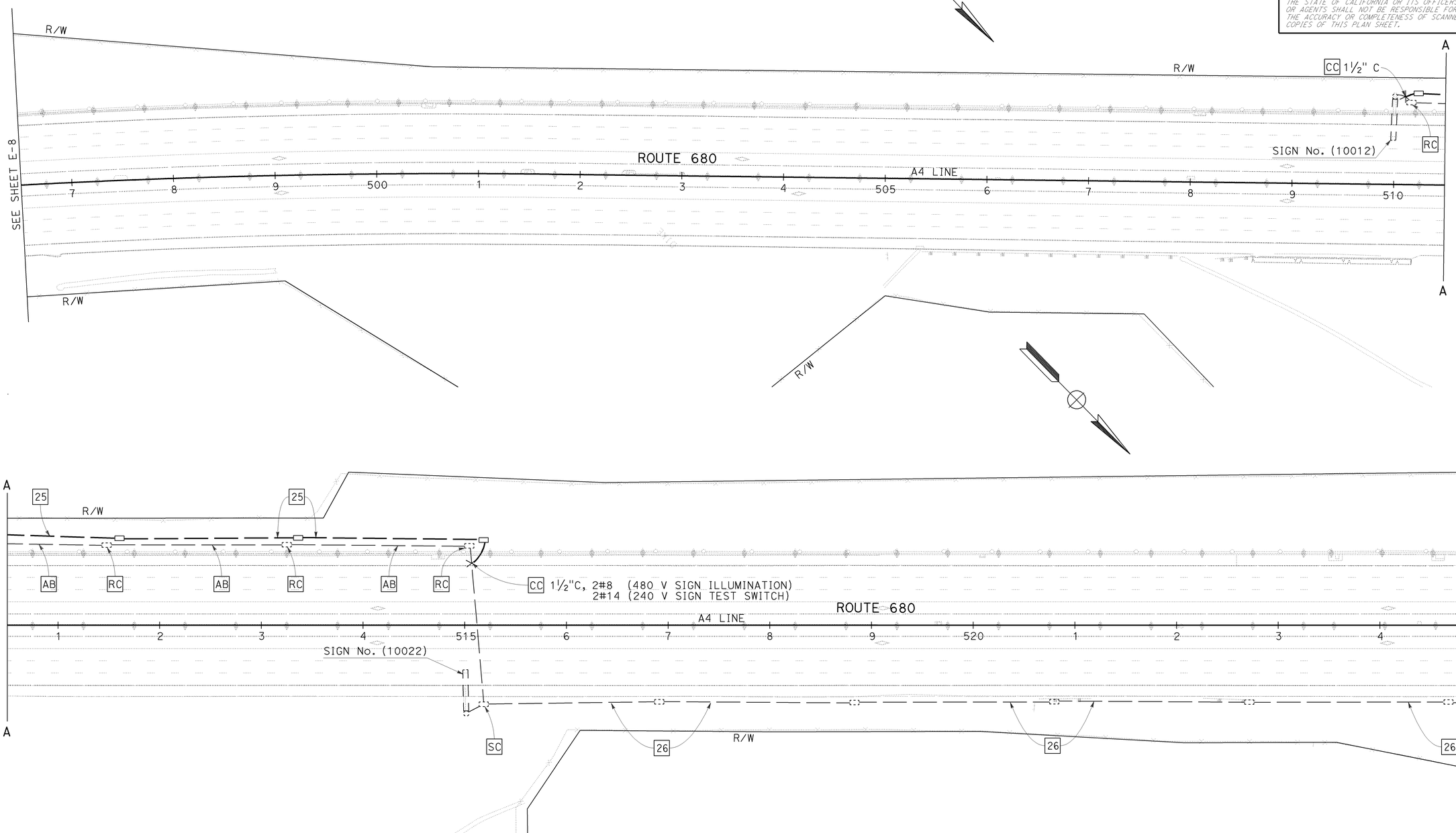

THIS PLAN IS ACCURATE FOR ELECTRICAL WORK ONLY

FOR NOTES, ABBREVIATIONS AND LEGEND, SEE SHEET E-1

LIGHTING AND SIGN ILLUMINATION

SCALE: 1" = 50'

E-9

STATE OF CALIFORNIA - DEPARTMENT OF TRANSPORTATION
Caltrans
ELECTRICAL

FUNCTIONAL SUPERVISOR: LAI HONG CHIU
CALCULATED-DESIGNED BY: PIERRE LASSALLE
CHECKED BY: MAHMOOD NOII
REVISED BY
DATE REVISED

LAST REVISION 07-16-09
DATE PLOTTED => 04-FEB-2010
TIME PLOTTED => 13:55

Dist	COUNTY	ROUTE	POST MILES TOTAL PROJECT	SHEET No.	TOTAL SHEETS
04	CC	680	0.0/R12.8	375	504

REGISTERED ELECTRICAL ENGINEER 8-3-09 DATE

2-1-10
PLANS APPROVAL DATE

REGISTERED PROFESSIONAL ENGINEER Mahmood Noii No. 13717 Exp. 6-30-11 ELECT STATE OF CALIFORNIA

THE STATE OF CALIFORNIA OR ITS OFFICERS OR AGENTS SHALL NOT BE RESPONSIBLE FOR THE ACCURACY OR COMPLETENESS OF SCANNED COPIES OF THIS PLAN SHEET.

FOR ACCURATE RIGHT OF WAY DATA,
CONTACT RIGHT OF WAY ENGINEERING
AT THE DISTRICT OFFICE.

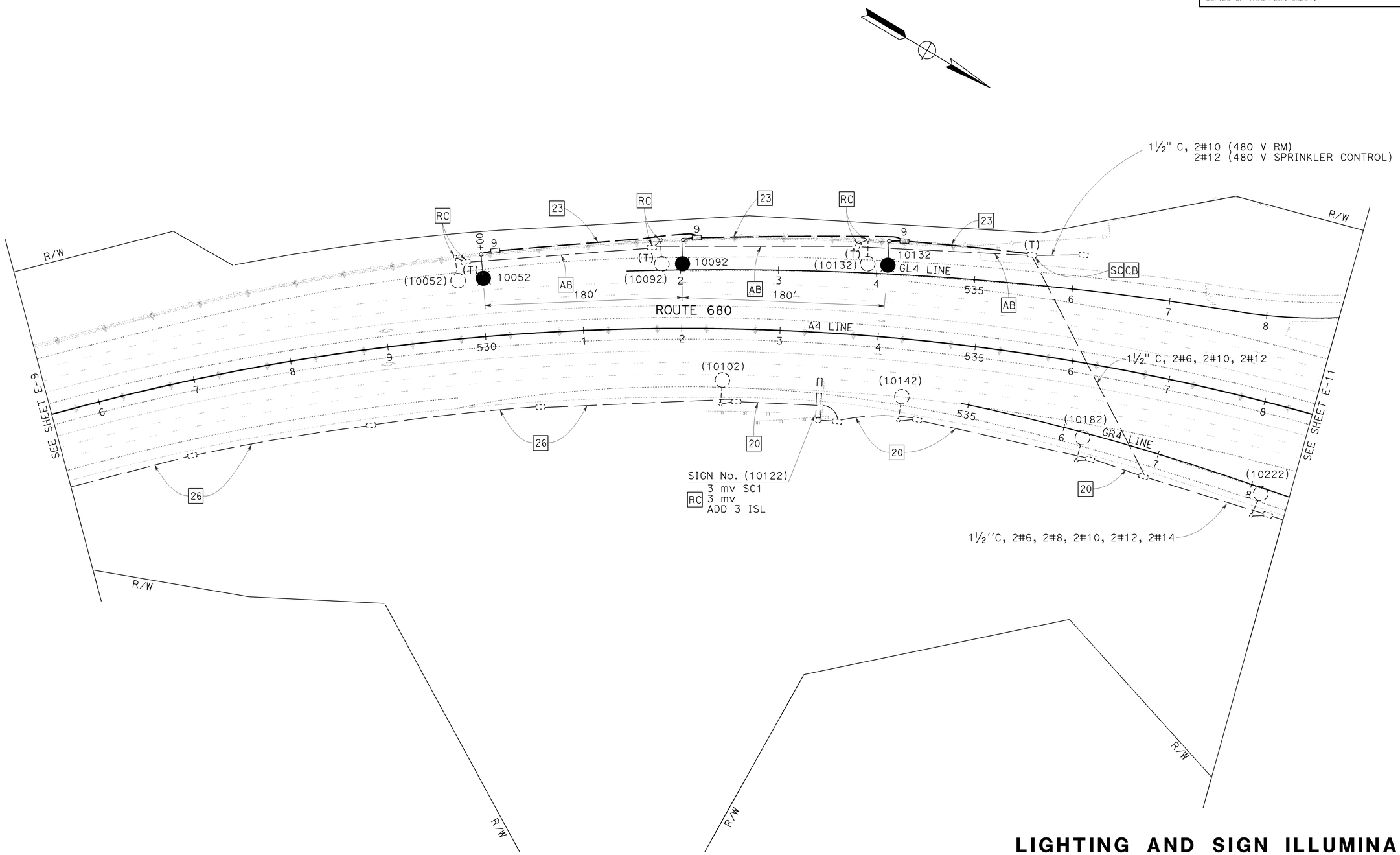

THIS PLAN IS ACCURATE FOR ELECTRICAL WORK ONLY

FOR NOTES, ABBREVIATIONS AND LEGEND, SEE SHEET E-1

LIGHTING AND SIGN ILLUMINATION

SCALE: 1'' = 50'

E-10

STATE OF CALIFORNIA - DEPARTMENT OF TRANSPORTATION
Caltrans
ELECTRICAL

FUNCTIONAL SUPERVISOR: LAI HONG CHIU

CALCULATED-DESIGNED BY: PIERRE LASSALLE
CHECKED BY: MAHMOOD NOII
REVISED BY
DATE REVISED

LAST REVISION 07-13-09
DATE PLOTTED => 04-FEB-2010
TIME PLOTTED => 13:25

Dist	COUNTY	ROUTE	POST MILES TOTAL PROJECT	SHEET No.	TOTAL SHEETS
04	CC	680	0.0/R12.8	376	504

REGISTERED ELECTRICAL ENGINEER 8-3-09 DATE

2-1-10
PLANS APPROVAL DATE

REGISTERED PROFESSIONAL ENGINEER Mahmood Noii No. 13717 Exp. 6-30-11 ELECT STATE OF CALIFORNIA

THE STATE OF CALIFORNIA OR ITS OFFICERS OR AGENTS SHALL NOT BE RESPONSIBLE FOR THE ACCURACY OR COMPLETENESS OF SCANNED COPIES OF THIS PLAN SHEET.

FOR ACCURATE RIGHT OF WAY DATA,
CONTACT RIGHT OF WAY ENGINEERING
AT THE DISTRICT OFFICE.

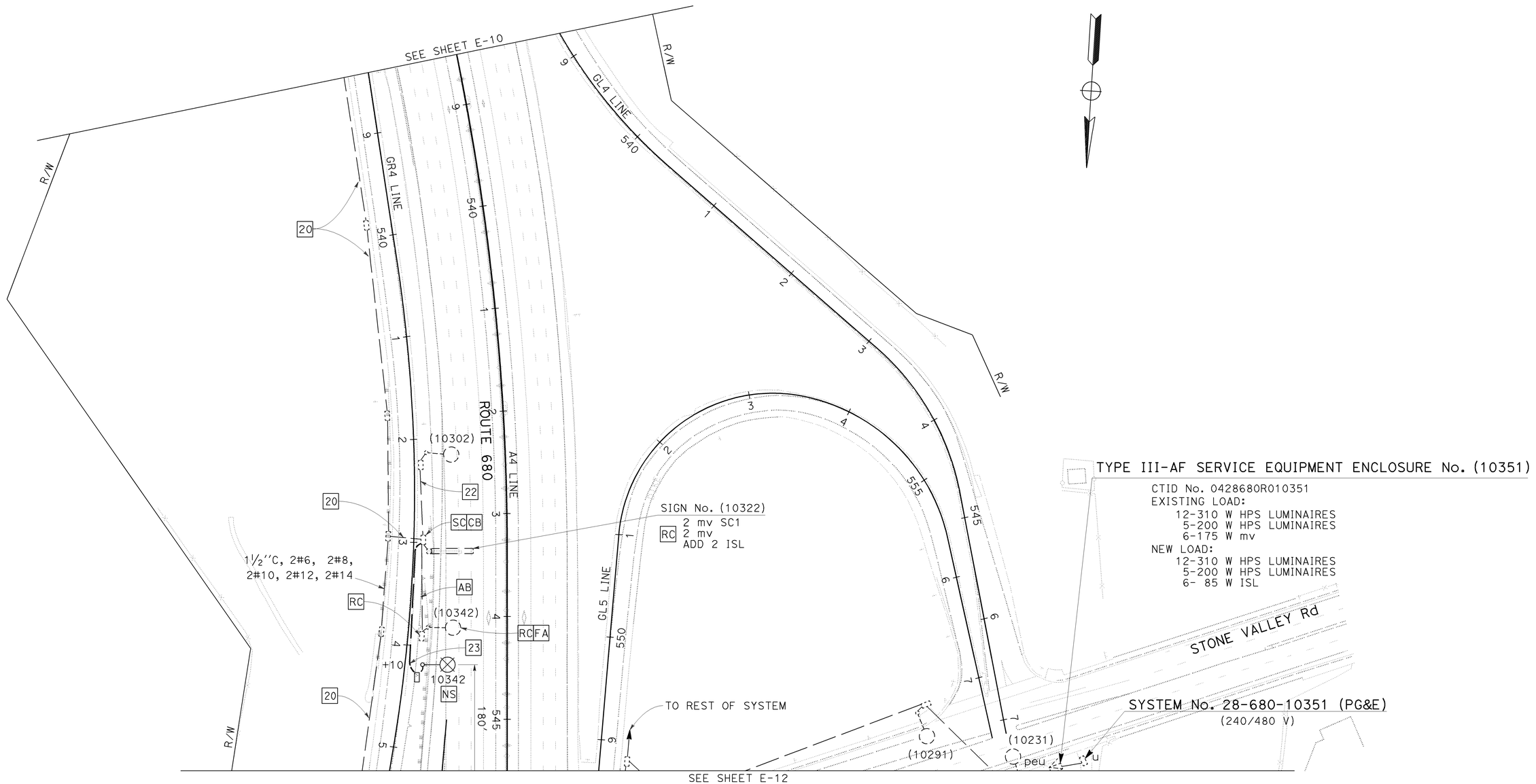

THIS PLAN IS ACCURATE FOR ELECTRICAL WORK ONLY

FOR NOTES, ABBREVIATIONS AND LEGEND, SEE SHEET E-1

LIGHTING AND SIGN ILLUMINATION

SCALE: 1'' = 50'

E-11

STATE OF CALIFORNIA - DEPARTMENT OF TRANSPORTATION
Caltrans
ELECTRICAL

FUNCTIONAL SUPERVISOR: LAI HONG CHIU
CALCULATED-DESIGNED BY: PIERRE LASSALLE
CHECKED BY: MAHMOOD NOII
REVISED BY
DATE REVISED

LAST REVISION 10-07-09
DATE PLOTTED => 04-FEB-2010
TIME PLOTTED => 13:29

Dist	COUNTY	ROUTE	POST MILES TOTAL PROJECT	SHEET No.	TOTAL SHEETS
04	CC	680	0.0/R12.8	377	504

REGISTERED ELECTRICAL ENGINEER 8-3-09 DATE

2-1-10
PLANS APPROVAL DATE

REGISTERED PROFESSIONAL ENGINEER Mahmood Noii No. 13717 Exp 6-30-11 ELECT STATE OF CALIFORNIA

THE STATE OF CALIFORNIA OR ITS OFFICERS OR AGENTS SHALL NOT BE RESPONSIBLE FOR THE ACCURACY OR COMPLETENESS OF SCANNED COPIES OF THIS PLAN SHEET.

FOR ACCURATE RIGHT OF WAY DATA,
CONTACT RIGHT OF WAY ENGINEERING
AT THE DISTRICT OFFICE.

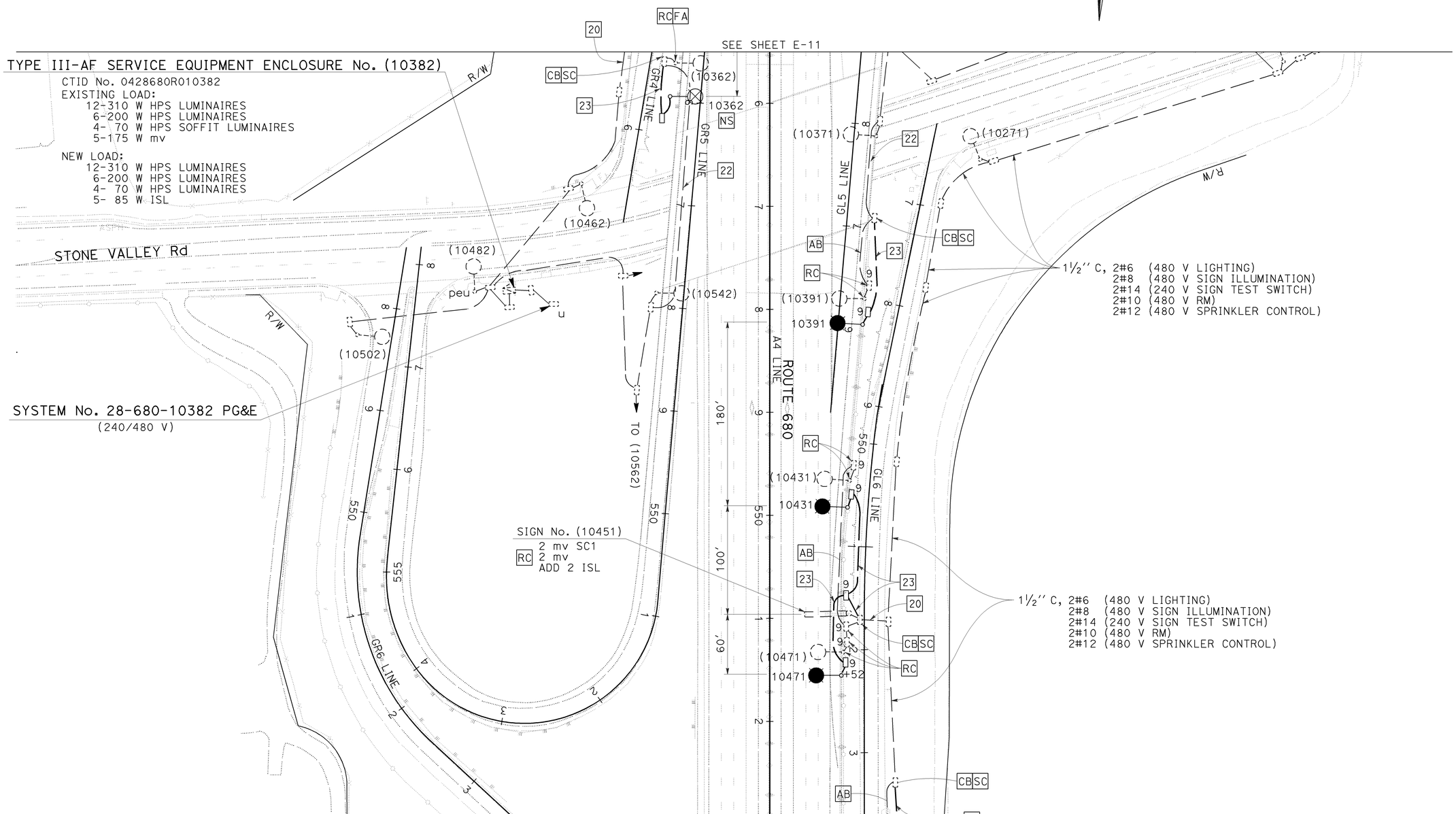

THIS PLAN IS ACCURATE FOR ELECTRICAL WORK ONLY

FOR NOTES, ABBREVIATIONS AND LEGEND, SEE SHEET E-1

LIGHTING AND SIGN ILLUMINATION

SCALE: 1'' = 50'

E-12

STATE OF CALIFORNIA - DEPARTMENT OF TRANSPORTATION
Caltrans
ELECTRICAL
FUNCTIONAL SUPERVISOR: LAI HONG CHIU
CALCULATED-DESIGNED BY: PIERRE LASSALLE
CHECKED BY: MAHMOOD NOII
REVISED BY
DATE REVISED

LAST REVISION 10-07-09
DATE PLOTTED => 04-FEB-2010
TIME PLOTTED => 13:29

Dist	COUNTY	ROUTE	POST MILES TOTAL PROJECT	SHEET No.	TOTAL SHEETS
04	CC	680	0.0/R12.8	378	504

REGISTERED ELECTRICAL ENGINEER 8-3-09 DATE

2-1-10
PLANS APPROVAL DATE

REGISTERED PROFESSIONAL ENGINEER Mahmood Noii No. 13717 Exp. 6-30-11 ELECT STATE OF CALIFORNIA

THE STATE OF CALIFORNIA OR ITS OFFICERS OR AGENTS SHALL NOT BE RESPONSIBLE FOR THE ACCURACY OR COMPLETENESS OF SCANNED COPIES OF THIS PLAN SHEET.

FOR ACCURATE RIGHT OF WAY DATA,
CONTACT RIGHT OF WAY ENGINEERING
AT THE DISTRICT OFFICE.

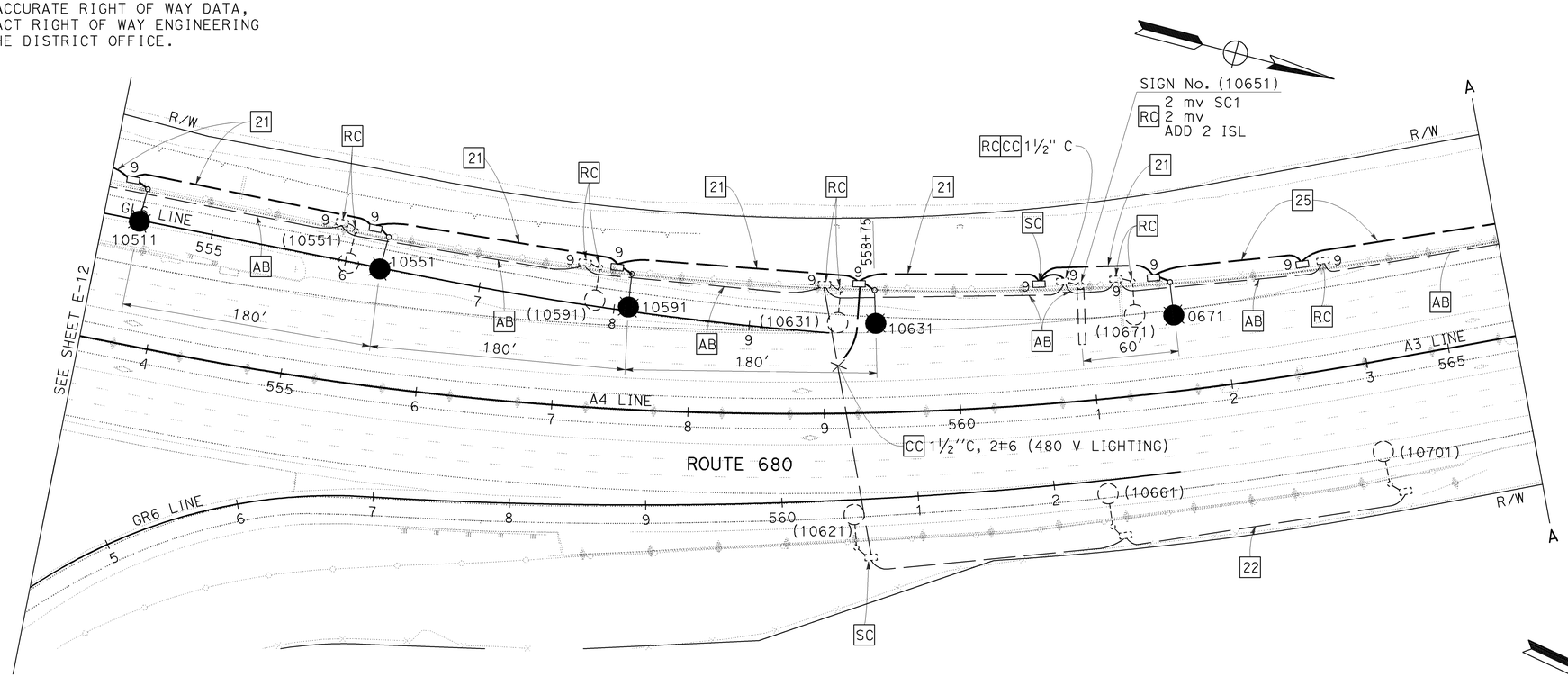

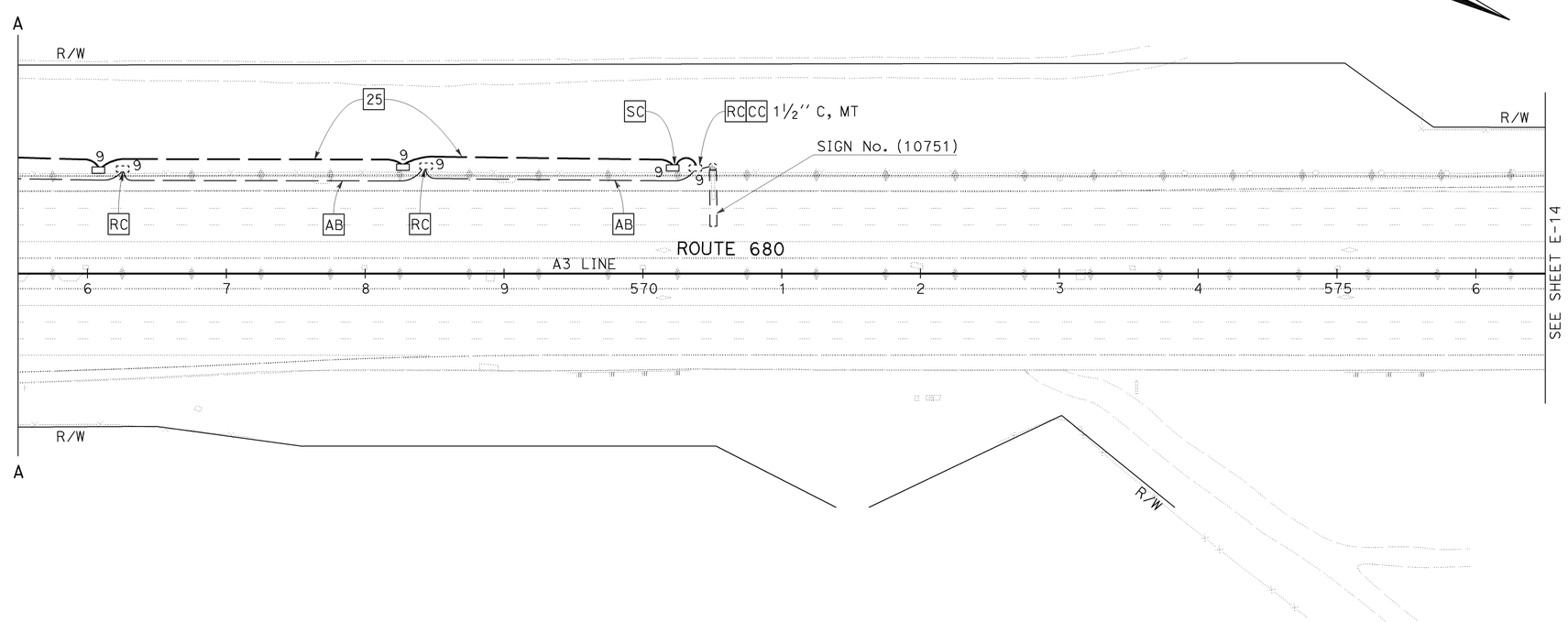

THIS PLAN IS ACCURATE FOR ELECTRICAL WORK ONLY

FOR NOTES, ABBREVIATIONS AND LEGEND, SEE SHEET E-1

LIGHTING AND SIGN ILLUMINATION

SCALE: 1" = 50'

E-13

STATE OF CALIFORNIA - DEPARTMENT OF TRANSPORTATION
Caltrans
ELECTRICAL

FUNCTIONAL SUPERVISOR: LAI HONG CHIU
CALCULATED-DESIGNED BY: PIERRE LASSALLE
CHECKED BY: MAHMOOD NOII
REVISED BY
DATE REVISED

LAST REVISION 10-07-09
DATE PLOTTED => 04-FEB-2010
TIME PLOTTED => 13:29

Dist	COUNTY	ROUTE	POST MILES TOTAL PROJECT	SHEET No.	TOTAL SHEETS
04	CC	680	0.0/R12.8	379	504

REGISTERED ELECTRICAL ENGINEER 8-3-09 DATE

2-1-10
PLANS APPROVAL DATE

REGISTERED PROFESSIONAL ENGINEER Mahmood Noii No. 13717 Exp. 6-30-11 ELECT STATE OF CALIFORNIA

THE STATE OF CALIFORNIA OR ITS OFFICERS OR AGENTS SHALL NOT BE RESPONSIBLE FOR THE ACCURACY OR COMPLETENESS OF SCANNED COPIES OF THIS PLAN SHEET.

FOR ACCURATE RIGHT OF WAY DATA,
CONTACT RIGHT OF WAY ENGINEERING
AT THE DISTRICT OFFICE.

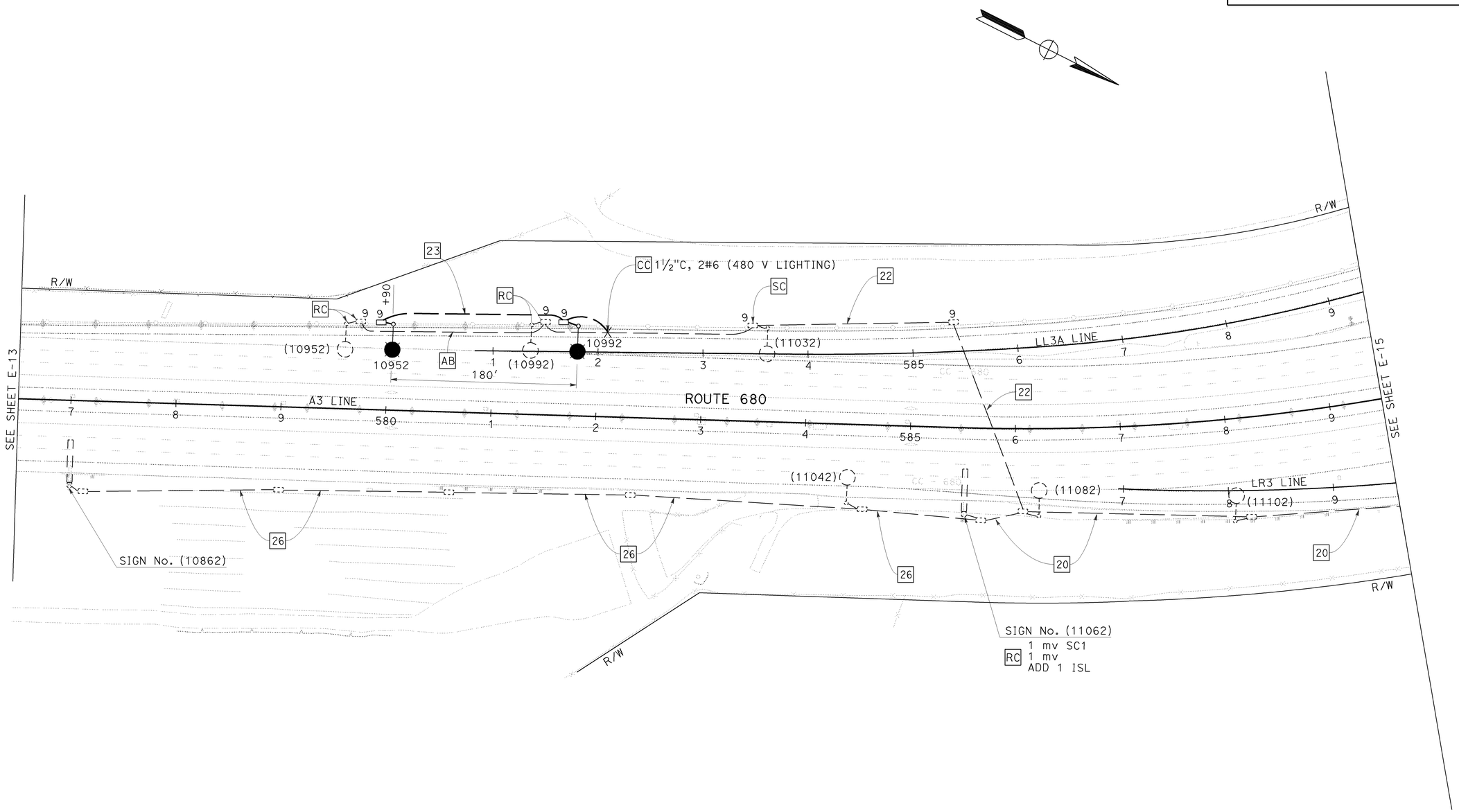

THIS PLAN IS ACCURATE FOR ELECTRICAL WORK ONLY

FOR NOTES, ABBREVIATIONS AND LEGEND, SEE SHEET E-1

LIGHTING AND SIGN ILLUMINATION

SCALE: 1'' = 50'

E-14

STATE OF CALIFORNIA - DEPARTMENT OF TRANSPORTATION
Caltrans
ELECTRICAL

FUNCTIONAL SUPERVISOR: LAI HONG CHIU
CALCULATED-DESIGNED BY: PIERRE LASSALLE
CHECKED BY: MAHMOOD NOII
REVISED BY
DATE REVISED

LAST REVISION 07-16-09
DATE PLOTTED => 04-FEB-2010
TIME PLOTTED => 13:29

Dist	COUNTY	ROUTE	POST MILES TOTAL PROJECT	SHEET No.	TOTAL SHEETS
04	CC	680	0.0/R12.8	380	504

REGISTERED ELECTRICAL ENGINEER 8-3-09 DATE

2-1-10
PLANS APPROVAL DATE

REGISTERED PROFESSIONAL ENGINEER Mahmood Noii No. 13717 Exp 6-30-11 ELECT STATE OF CALIFORNIA

THE STATE OF CALIFORNIA OR ITS OFFICERS OR AGENTS SHALL NOT BE RESPONSIBLE FOR THE ACCURACY OR COMPLETENESS OF SCANNED COPIES OF THIS PLAN SHEET.

FOR ACCURATE RIGHT OF WAY DATA,
CONTACT RIGHT OF WAY ENGINEERING
AT THE DISTRICT OFFICE.

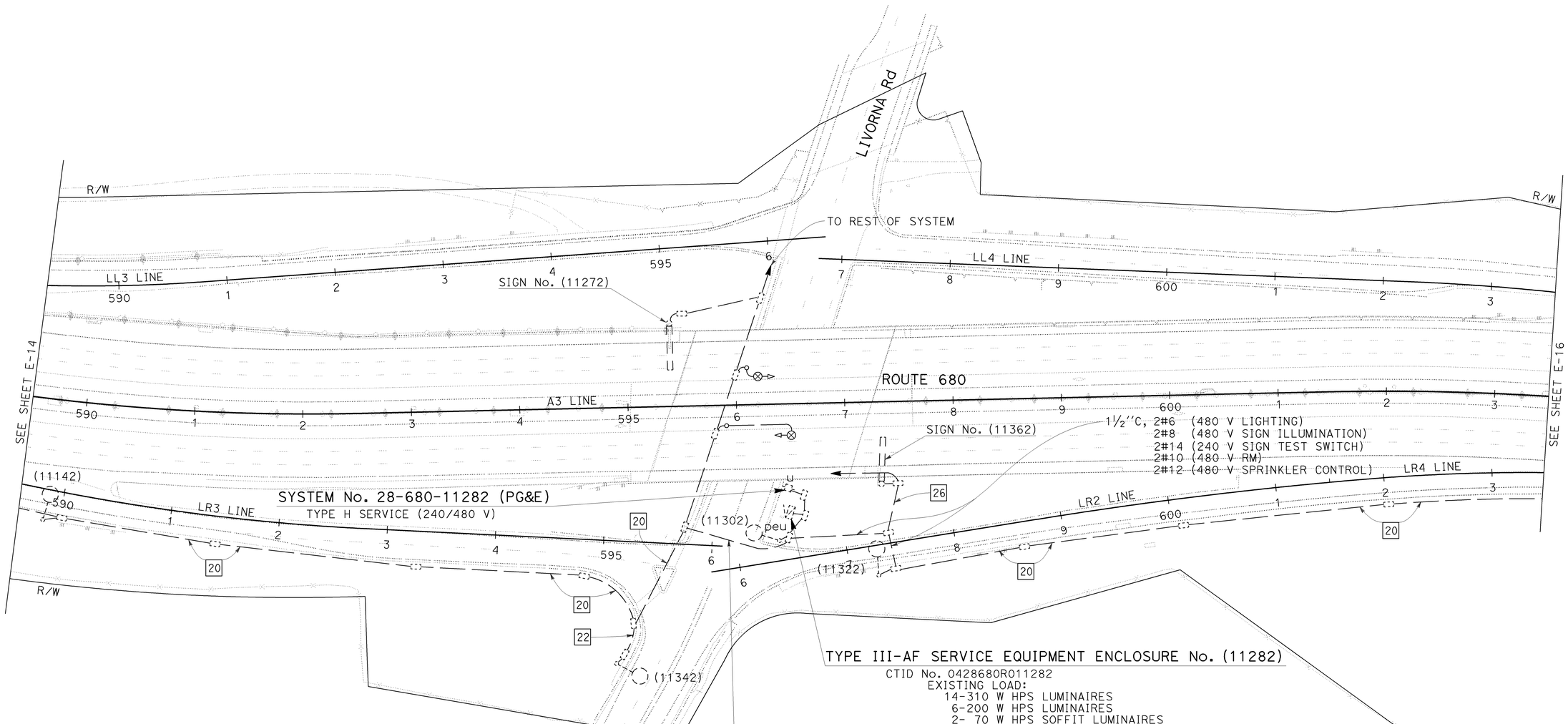

THIS PLAN IS ACCURATE FOR ELECTRICAL WORK ONLY

FOR NOTES, ABBREVIATIONS AND LEGEND, SEE SHEET E-1

LIGHTING AND SIGN ILLUMINATION

SCALE: 1" = 50'

E-15

STATE OF CALIFORNIA - DEPARTMENT OF TRANSPORTATION
Caltrans
ELECTRICAL

FUNCTIONAL SUPERVISOR: LAI HONG CHIU
CALCULATED-DESIGNED BY: PIERRE LASSALLE
CHECKED BY: MAHMOOD NOII
REVISED BY
DATE REVISED

LAST REVISION DATE PLOTTED => 04-FEB-2010
TIME PLOTTED => 13:29
10-07-09

BORDER LAST REVISED 4/11/2008
RELATIVE BORDER SCALE IS IN INCHES 0 1 2 3
USERNAME => trmnguye
DGN FILE => 44470uua015.dgn
CU 04236
EA 4470U1

Dist	COUNTY	ROUTE	POST MILES TOTAL PROJECT	SHEET No.	TOTAL SHEETS
04	CC	680	0.0/R12.8	381	504

REGISTERED ELECTRICAL ENGINEER 8-3-09 DATE

2-1-10
PLANS APPROVAL DATE

REGISTERED PROFESSIONAL ENGINEER Mahmood Noii No. 13717 Exp 6-30-11 ELECT STATE OF CALIFORNIA

THE STATE OF CALIFORNIA OR ITS OFFICERS OR AGENTS SHALL NOT BE RESPONSIBLE FOR THE ACCURACY OR COMPLETENESS OF SCANNED COPIES OF THIS PLAN SHEET.

FOR ACCURATE RIGHT OF WAY DATA, CONTACT RIGHT OF WAY ENGINEERING AT THE DISTRICT OFFICE.

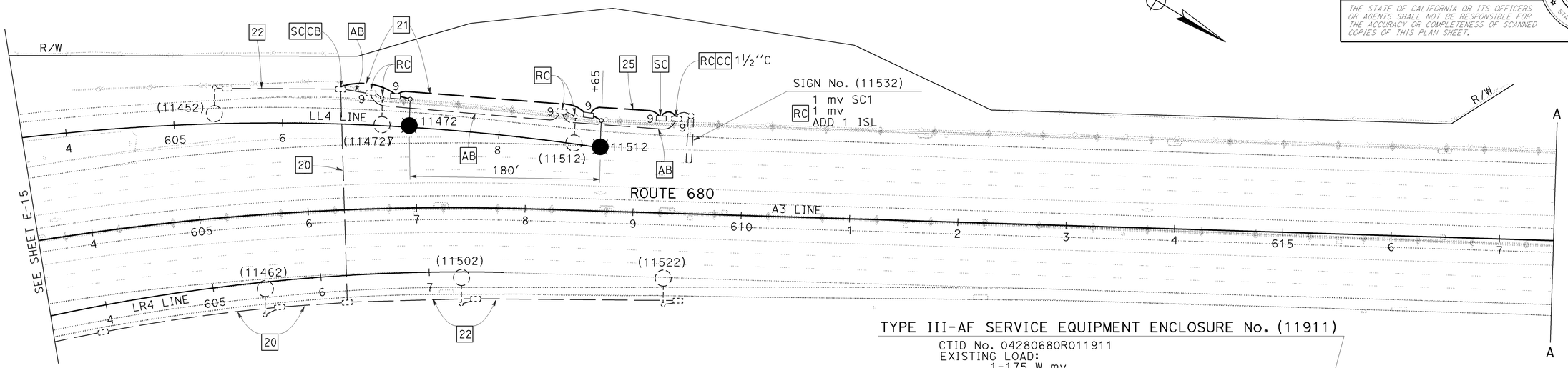

TYPE III-AF SERVICE EQUIPMENT ENCLOSURE No. (11911)

CTID No. 04280680R011911
EXISTING LOAD:
1-175 W mv
NEW LOAD:
1-85 W ISL

SYSTEM No. 28-680-11911 (PG&E)

(120/240 V)

CC 1½"C, 2#6 (120 V RAMP METER)
2#8 (240 V SIGN ILLUMINATION)
2#10 (120 V SPRINKLER CONTROL)
2#14 (120 V SIGN TEST SWITCH)
3#14 (120 V PEU

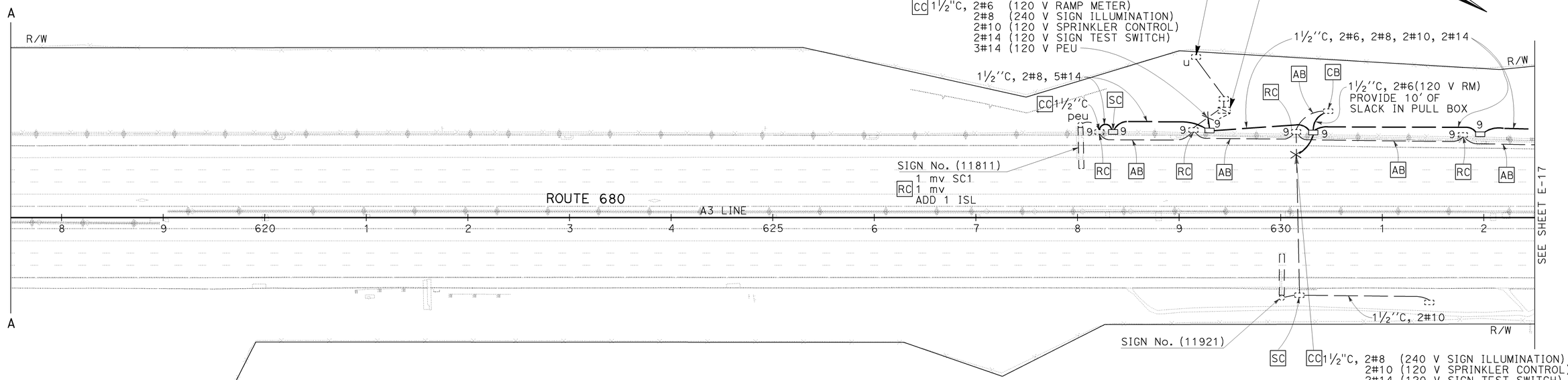

THIS PLAN IS ACCURATE FOR ELECTRICAL WORK ONLY

FOR NOTES, ABBREVIATIONS AND LEGEND, SEE SHEET E-1

LIGHTING AND SIGN ILLUMINATION

SCALE: 1'' = 50'

E-16

STATE OF CALIFORNIA - DEPARTMENT OF TRANSPORTATION
Caltrans
ELECTRICAL

FUNCTIONAL SUPERVISOR: LAI HONG CHIU
CALCULATED-DESIGNED BY: PIERRE LASSALLE
CHECKED BY: MAHMOOD NOII
REVISED BY
DATE REVISED

LAST REVISION 07-16-09
DATE PLOTTED => 04-FEB-2010
TIME PLOTTED => 13:29

Dist	COUNTY	ROUTE	POST MILES TOTAL PROJECT	SHEET No.	TOTAL SHEETS
04	CC	680	0.0/R12.8	382	504

REGISTERED ELECTRICAL ENGINEER 8-3-09 DATE

2-1-10
PLANS APPROVAL DATE

REGISTERED PROFESSIONAL ENGINEER Mahmood Noii No. 13717 Exp 6-30-11 ELECT STATE OF CALIFORNIA

THE STATE OF CALIFORNIA OR ITS OFFICERS OR AGENTS SHALL NOT BE RESPONSIBLE FOR THE ACCURACY OR COMPLETENESS OF SCANNED COPIES OF THIS PLAN SHEET.

FOR ACCURATE RIGHT OF WAY DATA, CONTACT RIGHT OF WAY ENGINEERING AT THE DISTRICT OFFICE.

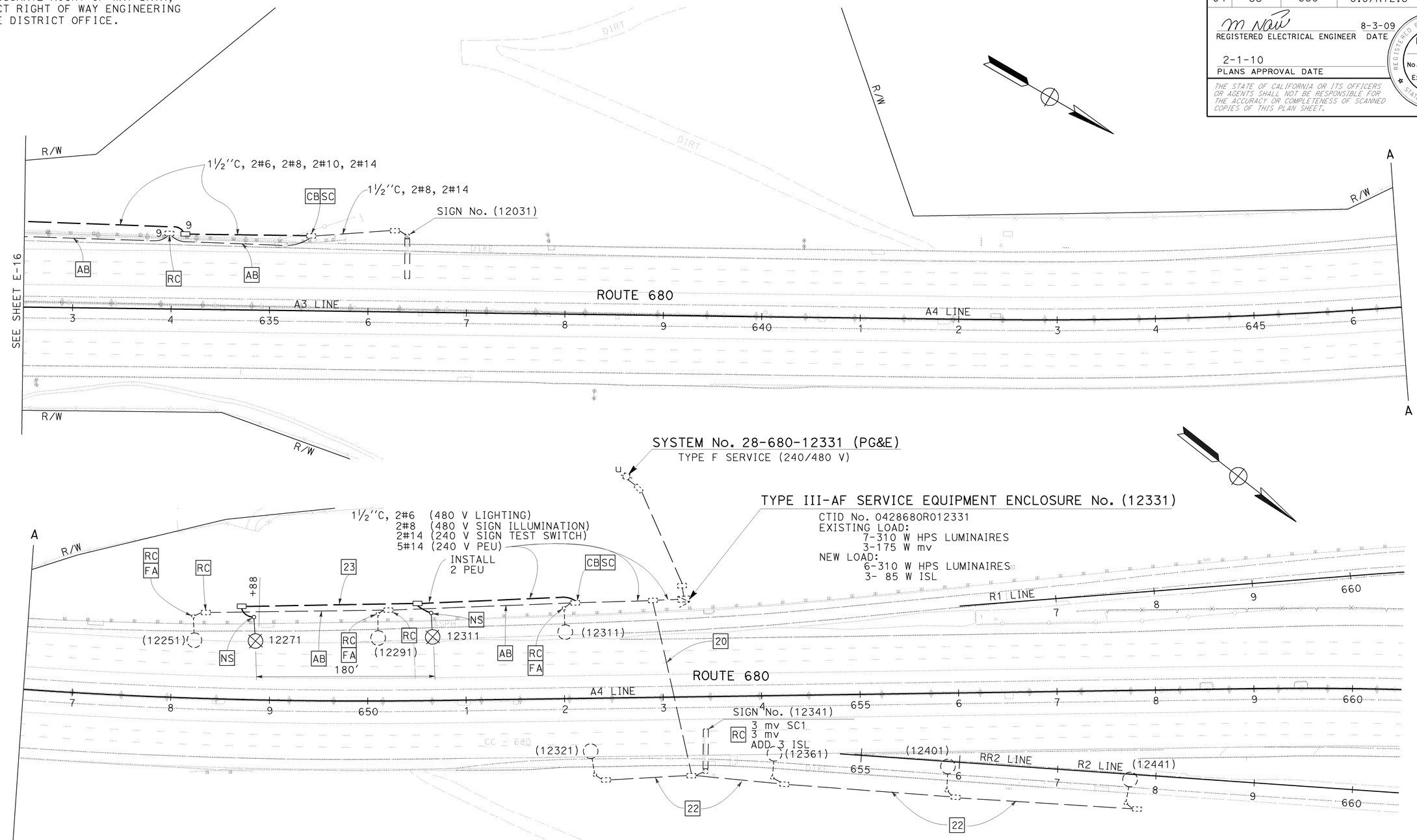

THIS PLAN IS ACCURATE FOR ELECTRICAL WORK ONLY

FOR NOTES, ABBREVIATIONS AND LEGEND, SEE SHEET E-1

LIGHTING AND SIGN ILLUMINATION

SCALE: 1'' = 50'

E-17

STATE OF CALIFORNIA - DEPARTMENT OF TRANSPORTATION
Caltrans
ELECTRICAL

FUNCTIONAL SUPERVISOR: LAI HONG CHIU
CALCULATED-DESIGNED BY: PIERRE LASSALLE
CHECKED BY: MAHMOOD NOII
REVISED BY
DATE REVISED

LAST REVISION 07-16-09
DATE PLOTTED => 04-FEB-2010
TIME PLOTTED => 14:35

Dist	COUNTY	ROUTE	POST MILES TOTAL PROJECT	SHEET No.	TOTAL SHEETS
04	CC	680	0.0/R12.8	383	504

REGISTERED ELECTRICAL ENGINEER 8-3-09 DATE

2-1-10
PLANS APPROVAL DATE

REGISTERED PROFESSIONAL ENGINEER Mahmood Noii No. 13717 Exp 6-30-11 ELECT STATE OF CALIFORNIA

THE STATE OF CALIFORNIA OR ITS OFFICERS OR AGENTS SHALL NOT BE RESPONSIBLE FOR THE ACCURACY OR COMPLETENESS OF SCANNED COPIES OF THIS PLAN SHEET.

FOR ACCURATE RIGHT OF WAY DATA,
CONTACT RIGHT OF WAY ENGINEERING
AT THE DISTRICT OFFICE.

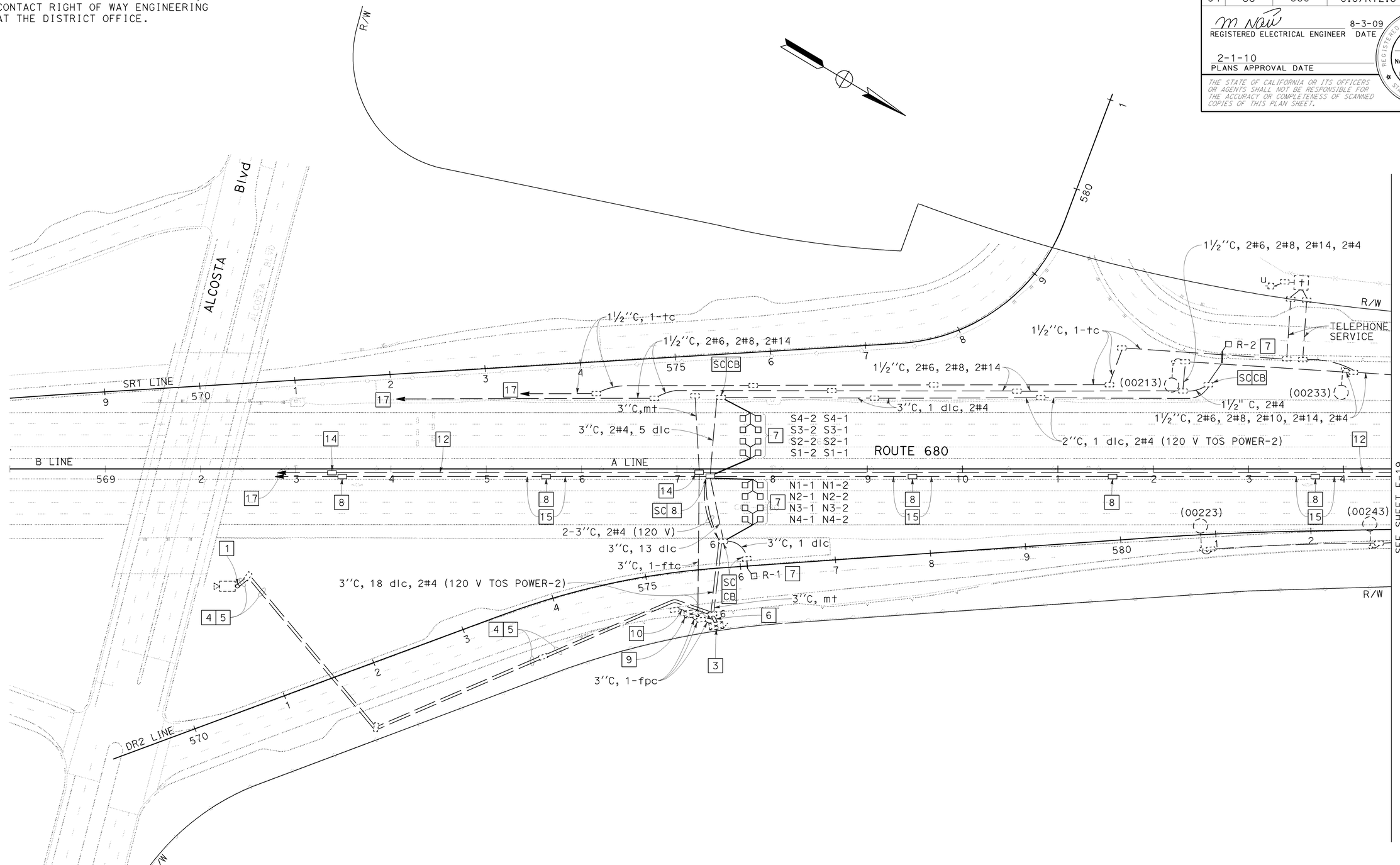

THIS PLAN IS ACCURATE FOR ELECTRICAL WORK ONLY

FOR NOTES, ABBREVIATIONS AND LEGEND, SEE SHEET E-1

TRAFFIC OPERATIONS SYSTEM

SCALE: 1" = 50'

E-18

STATE OF CALIFORNIA - DEPARTMENT OF TRANSPORTATION
Caltrans
ELECTRICAL

FUNCTIONAL SUPERVISOR: LAI HONG CHIU
CALCULATED-DESIGNED BY: PARWIZ KHAZI
CHECKED BY: MAHMOOD NOII
REVISED BY
DATE REVISED

LAST REVISION DATE PLOTTED => 04-FEB-2010
10-07-09 TIME PLOTTED => 14:35

Dist	COUNTY	ROUTE	POST MILES TOTAL PROJECT	SHEET No.	TOTAL SHEETS
04	CC	680	0.0/R12.8	384	504

REGISTERED ELECTRICAL ENGINEER 8-3-09 DATE

2-1-10
PLANS APPROVAL DATE

REGISTERED PROFESSIONAL ENGINEER Mahmood Noii No. 13717 Exp 6-30-11 ELECT STATE OF CALIFORNIA

THE STATE OF CALIFORNIA OR ITS OFFICERS OR AGENTS SHALL NOT BE RESPONSIBLE FOR THE ACCURACY OR COMPLETENESS OF SCANNED COPIES OF THIS PLAN SHEET.

FOR ACCURATE RIGHT OF WAY DATA,
CONTACT RIGHT OF WAY ENGINEERING
AT THE DISTRICT OFFICE.

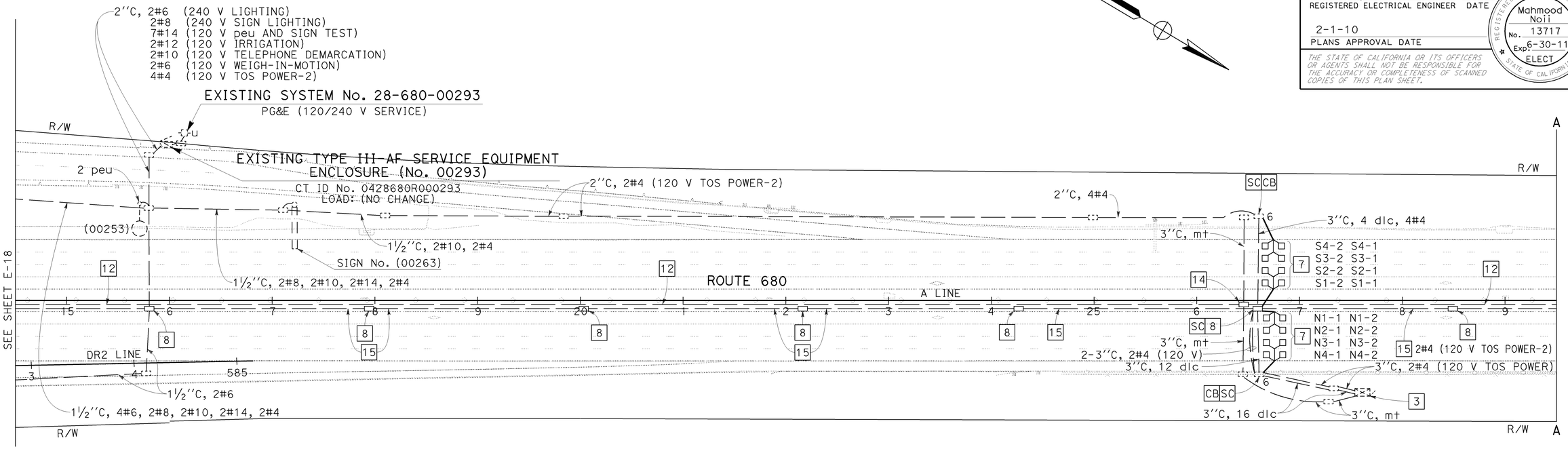

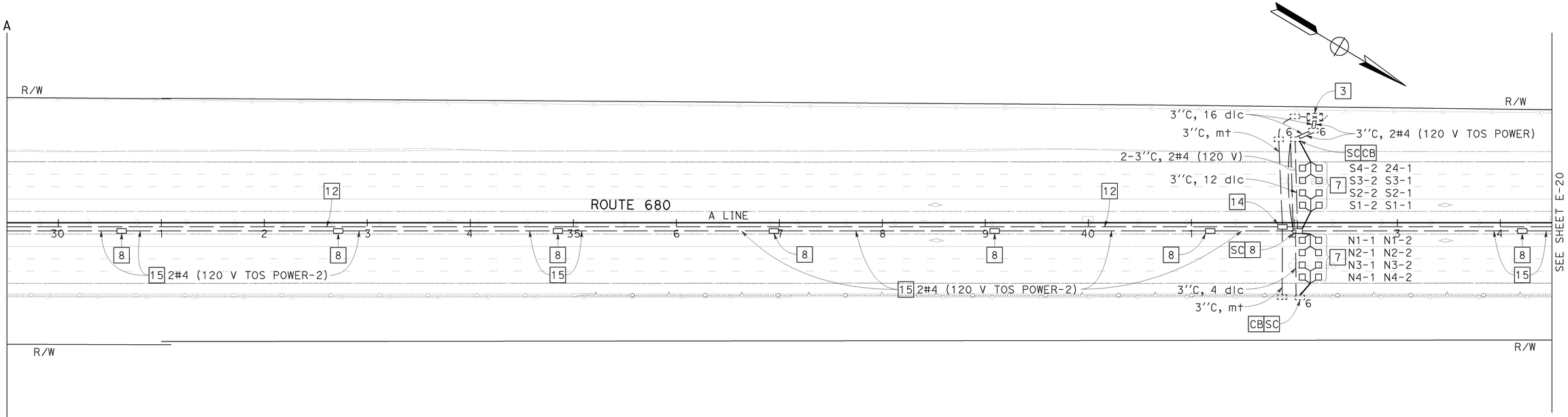

TRAFFIC OPERATIONS SYSTEM

SCALE: 1'' = 50'

THIS PLAN IS ACCURATE FOR ELECTRICAL WORK ONLY

FOR NOTES, ABBREVIATIONS AND LEGEND, SEE SHEET E-1

E-19

STATE OF CALIFORNIA - DEPARTMENT OF TRANSPORTATION
Caltrans
ELECTRICAL
FUNCTIONAL SUPERVISOR: LAI HONG CHIU
CALCULATED-DESIGNED BY: PARWIZ KHAZI
CHECKED BY: MAHMOOD NOII
REVISED BY
DATE REVISED

LAST REVISION 07-30-09
DATE PLOTTED => 04-FEB-2010
TIME PLOTTED => 14:36

Dist	COUNTY	ROUTE	POST MILES TOTAL PROJECT	SHEET No.	TOTAL SHEETS
04	CC	680	0.0/R12.8	385	504

REGISTERED ELECTRICAL ENGINEER 8-3-09 DATE

2-1-10
PLANS APPROVAL DATE

REGISTERED PROFESSIONAL ENGINEER Mahmood Noii No. 13717 Exp 6-30-11 ELECT STATE OF CALIFORNIA

THE STATE OF CALIFORNIA OR ITS OFFICERS OR AGENTS SHALL NOT BE RESPONSIBLE FOR THE ACCURACY OR COMPLETENESS OF SCANNED COPIES OF THIS PLAN SHEET.

FOR ACCURATE RIGHT OF WAY DATA,
CONTACT RIGHT OF WAY ENGINEERING
AT THE DISTRICT OFFICE.

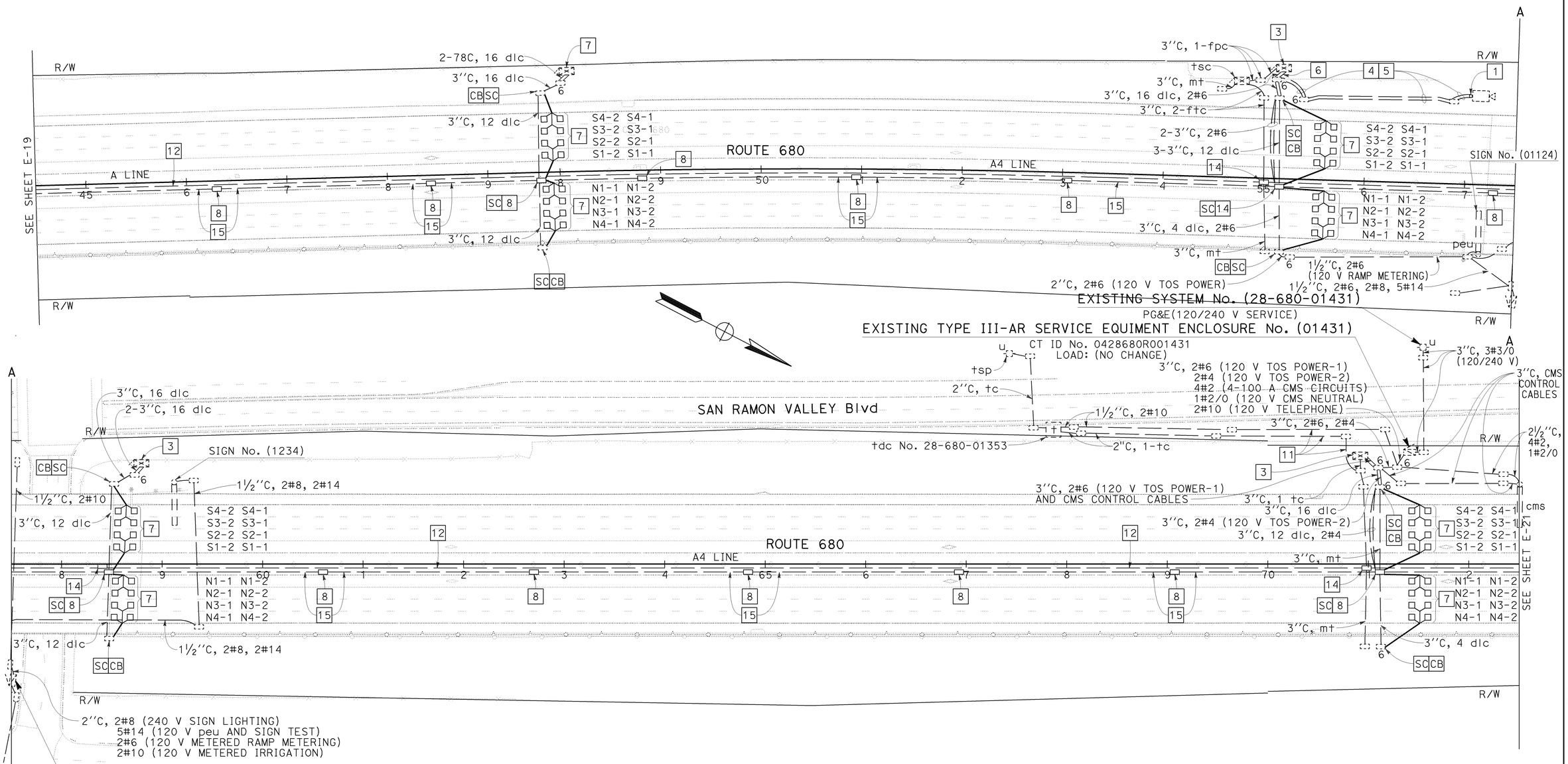

THIS PLAN IS ACCURATE FOR ELECTRICAL WORK ONLY

FOR NOTES, ABBREVIATIONS AND LEGEND, SEE SHEET E-1

TRAFFIC OPERATIONS SYSTEM

SCALE: 1" = 50'

E-20

REVISED BY	DATE REVISED
PARWIZ KHAZI	MAHMOOD NOII

CALCULATED-DESIGNED BY / CHECKED BY

FUNCTIONAL SUPERVISOR: LAI HONG CHIU

STATE OF CALIFORNIA - DEPARTMENT OF TRANSPORTATION

Caltrans

ELECTRICAL

LAST REVISION DATE PLOTTED => 04-FEB-2010
10-07-09 TIME PLOTTED => 14:36

Dist	COUNTY	ROUTE	POST MILES TOTAL PROJECT	SHEET No.	TOTAL SHEETS
04	CC	680	0.0/R12.8	386	504

REGISTERED ELECTRICAL ENGINEER 8-3-09 DATE

2-1-10
PLANS APPROVAL DATE

REGISTERED PROFESSIONAL ENGINEER Mahmood Noii No. 13717 Exp 6-30-11 ELECT STATE OF CALIFORNIA

THE STATE OF CALIFORNIA OR ITS OFFICERS OR AGENTS SHALL NOT BE RESPONSIBLE FOR THE ACCURACY OR COMPLETENESS OF SCANNED COPIES OF THIS PLAN SHEET.

FOR ACCURATE RIGHT OF WAY DATA,
CONTACT RIGHT OF WAY ENGINEERING
AT THE DISTRICT OFFICE.

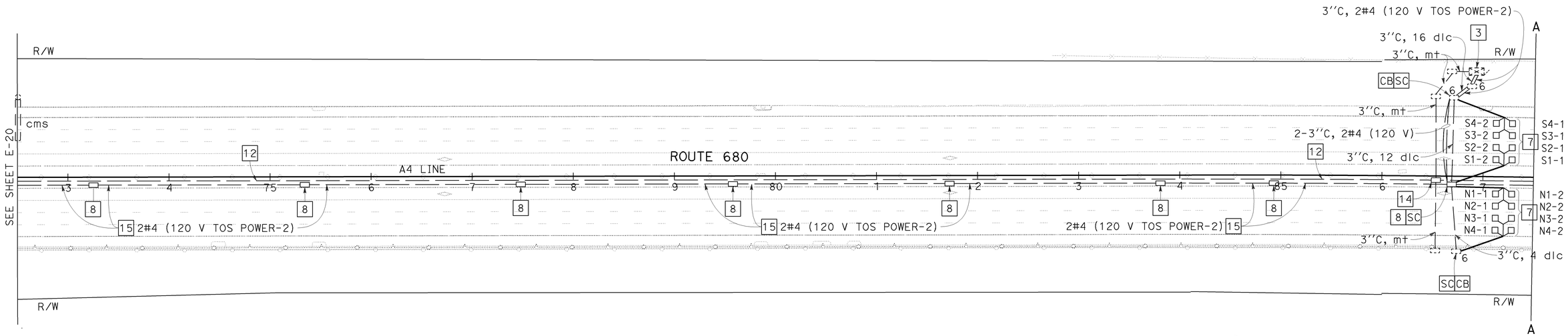

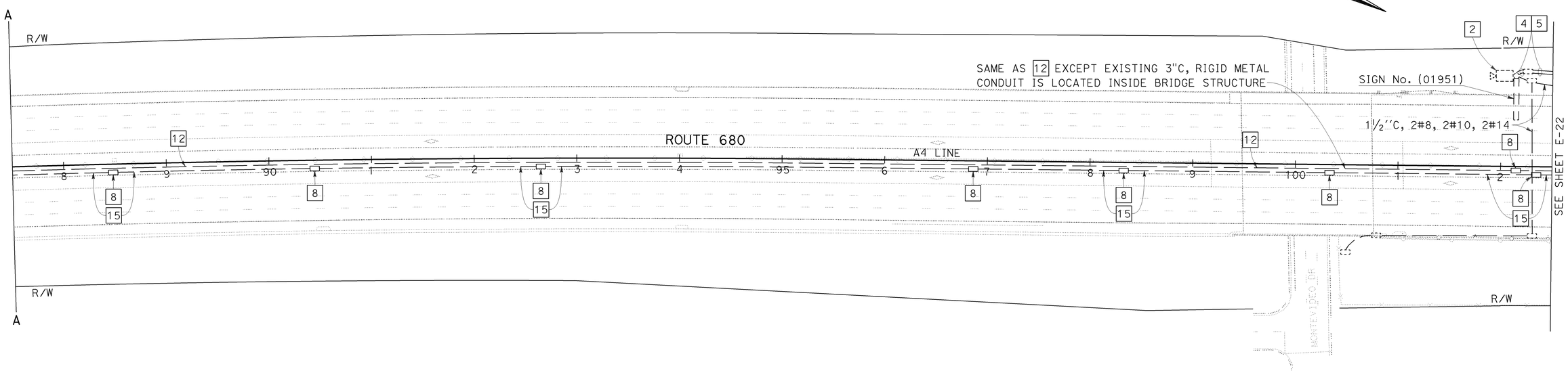

TRAFFIC OPERATIONS SYSTEM

SCALE: 1" = 50'

THIS PLAN IS ACCURATE FOR ELECTRICAL WORK ONLY

FOR NOTES, ABBREVIATIONS AND LEGEND, SEE SHEET E-1

E-21

STATE OF CALIFORNIA - DEPARTMENT OF TRANSPORTATION
Caltrans
ELECTRICAL

FUNCTIONAL SUPERVISOR: LAI HONG CHIU
CALCULATED-DESIGNED BY: PARWIZ KHAZI
CHECKED BY: MAHMOOD NOII
REVISED BY
DATE REVISED

LAST REVISION DATE PLOTTED => 04-FEB-2010
TIME PLOTTED => 14:36
10-07-09

Dist	COUNTY	ROUTE	POST MILES TOTAL PROJECT	SHEET No.	TOTAL SHEETS
04	CC	680	0.0/R12.8	387	504

REGISTERED ELECTRICAL ENGINEER 8-3-09 DATE

2-1-10
PLANS APPROVAL DATE

REGISTERED PROFESSIONAL ENGINEER Mahmood Noii No. 13717 Exp 6-30-11 ELECT STATE OF CALIFORNIA

THE STATE OF CALIFORNIA OR ITS OFFICERS OR AGENTS SHALL NOT BE RESPONSIBLE FOR THE ACCURACY OR COMPLETENESS OF SCANNED COPIES OF THIS PLAN SHEET.

FOR ACCURATE RIGHT OF WAY DATA, CONTACT RIGHT OF WAY ENGINEERING AT THE DISTRICT OFFICE.

EXISTING TYPE III-AF SERVICE EQUIPMENT ENCLOSURE No. 02011

EXISTING SYSTEM No. 28-680-02011
PG&E (120/240 V SERVICE)

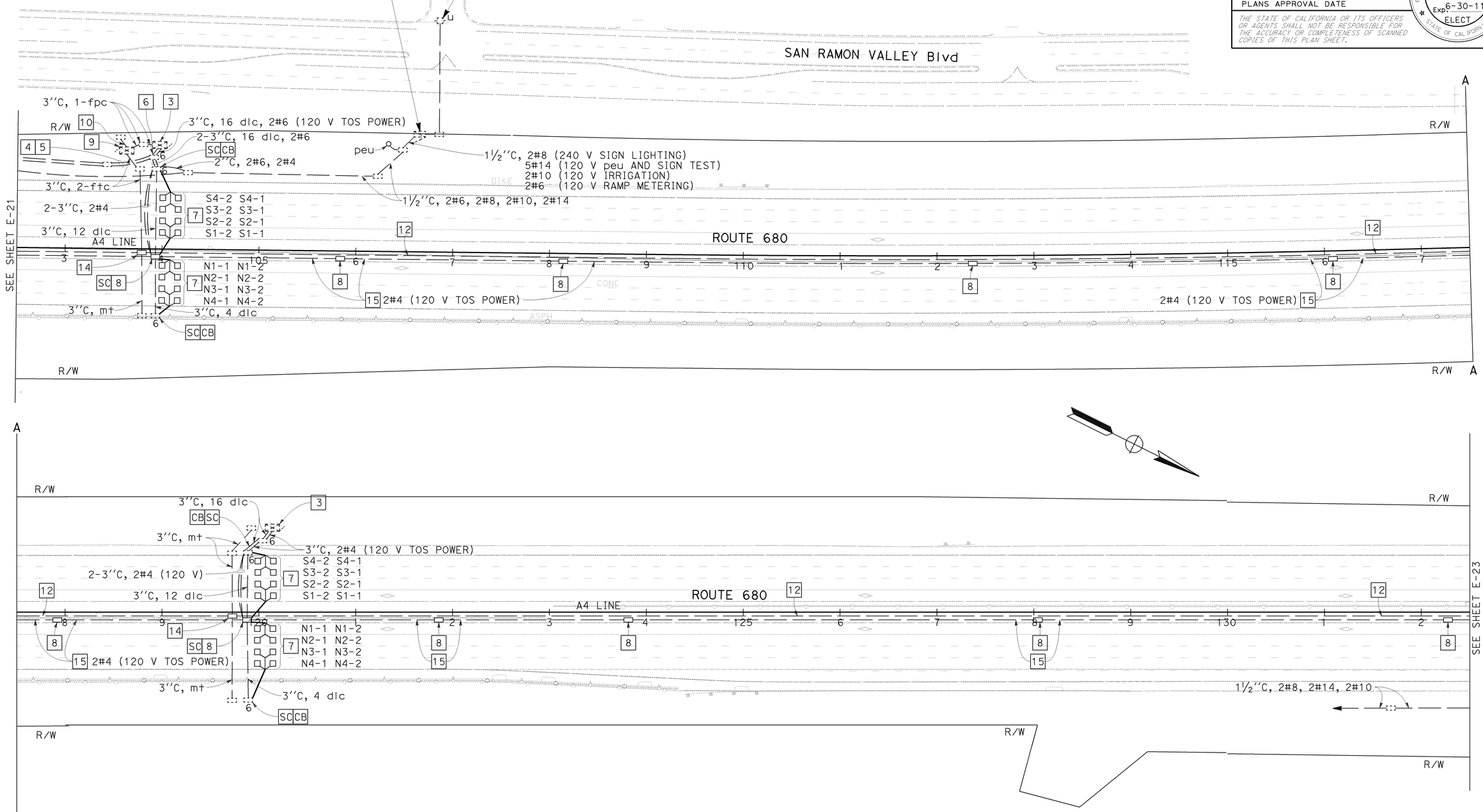

THIS PLAN IS ACCURATE FOR ELECTRICAL WORK ONLY

FOR NOTES, ABBREVIATIONS AND LEGEND, SEE SHEET E-1

TRAFFIC OPERATIONS SYSTEM

SCALE: 1" = 50'

E-22

REVISED BY | DATE REVISED
PARWIZ KHAZI | MAHMOOD NOII
CALCULATED-DESIGNED BY | CHECKED BY
FUNCTIONAL SUPERVISOR
LAI HONG CHIU

STATE OF CALIFORNIA - DEPARTMENT OF TRANSPORTATION
Caltrans
ELECTRICAL

LAST REVISION 10-07-09 | DATE PLOTTED => 04-FEB-2010 | TIME PLOTTED => 14:36

Dist	COUNTY	ROUTE	POST MILES TOTAL PROJECT	SHEET No.	TOTAL SHEETS
04	CC	680	0.0/R12.8	388	504

REGISTERED ELECTRICAL ENGINEER 8-3-09 DATE

2-1-10
PLANS APPROVAL DATE

REGISTERED PROFESSIONAL ENGINEER Mahmood Noii No. 13717 Exp 6-30-11 ELECT STATE OF CALIFORNIA

THE STATE OF CALIFORNIA OR ITS OFFICERS OR AGENTS SHALL NOT BE RESPONSIBLE FOR THE ACCURACY OR COMPLETENESS OF SCANNED COPIES OF THIS PLAN SHEET.

FOR ACCURATE RIGHT OF WAY DATA,
CONTACT RIGHT OF WAY ENGINEERING
AT THE DISTRICT OFFICE.

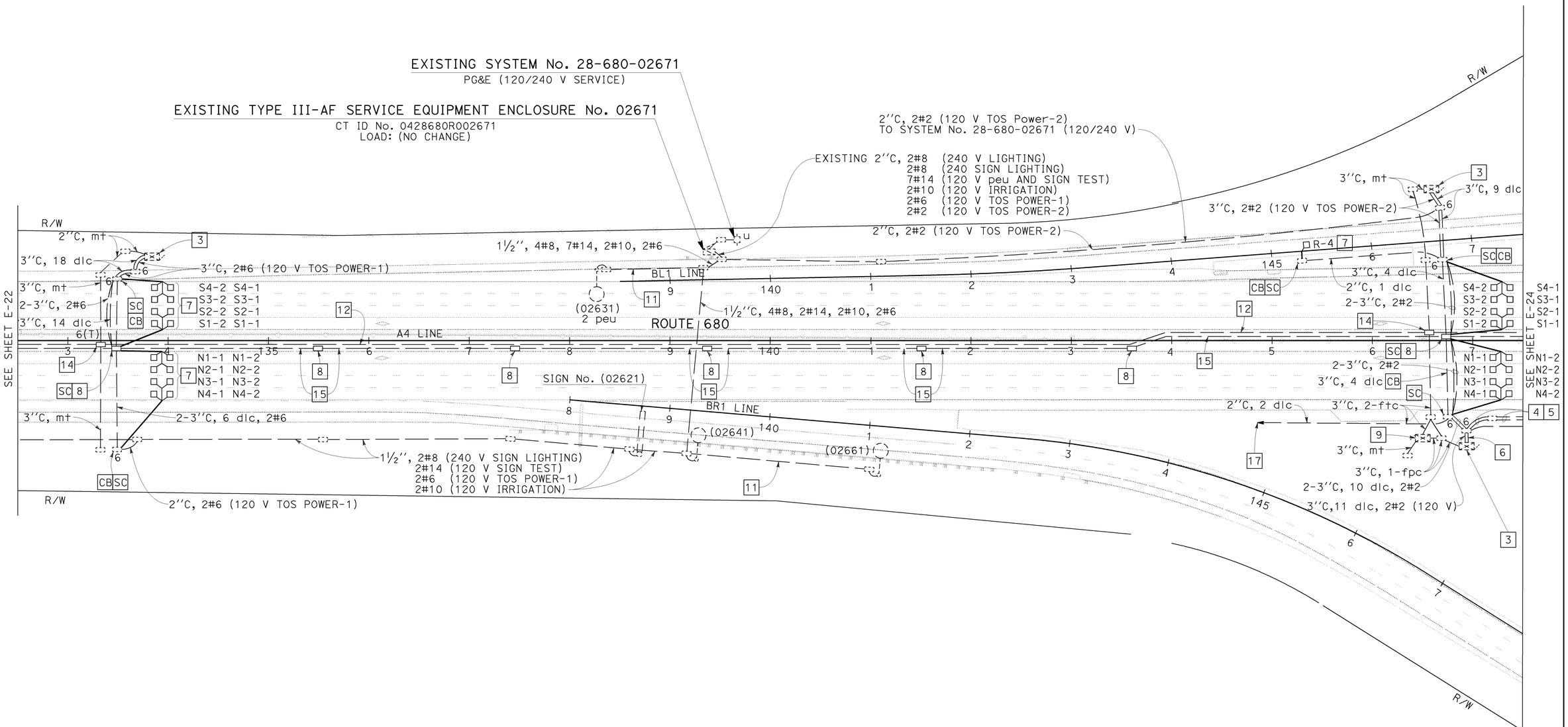

TRAFFIC OPERATIONS SYSTEM

SCALE: 1'' = 50'

THIS PLAN IS ACCURATE FOR ELECTRICAL WORK ONLY

FOR NOTES, ABBREVIATIONS AND LEGEND, SEE SHEET E-1

E-23

REVISED BY | DATE REVISED

CALCULATED-DESIGNED BY: PARWIZ KHAZI | CHECKED BY: MAHMOOD NOII

FUNCTIONAL SUPERVISOR: LAI HONG CHIU

STATE OF CALIFORNIA - DEPARTMENT OF TRANSPORTATION

Caltrans

ELECTRICAL

LAST REVISION | DATE PLOTTED => 04-FEB-2010 | TIME PLOTTED => 14:36
10-07-09

Dist	COUNTY	ROUTE	POST MILES TOTAL PROJECT	SHEET No.	TOTAL SHEETS
04	CC	680	0.0/R12.8	389	504

REGISTERED ELECTRICAL ENGINEER 8-3-09 DATE

2-1-10
PLANS APPROVAL DATE

REGISTERED PROFESSIONAL ENGINEER Mahmood Noii No. 13717 Exp. 6-30-11 ELECT STATE OF CALIFORNIA

THE STATE OF CALIFORNIA OR ITS OFFICERS OR AGENTS SHALL NOT BE RESPONSIBLE FOR THE ACCURACY OR COMPLETENESS OF SCANNED COPIES OF THIS PLAN SHEET.

FOR ACCURATE RIGHT OF WAY DATA, CONTACT RIGHT OF WAY ENGINEERING AT THE DISTRICT OFFICE.

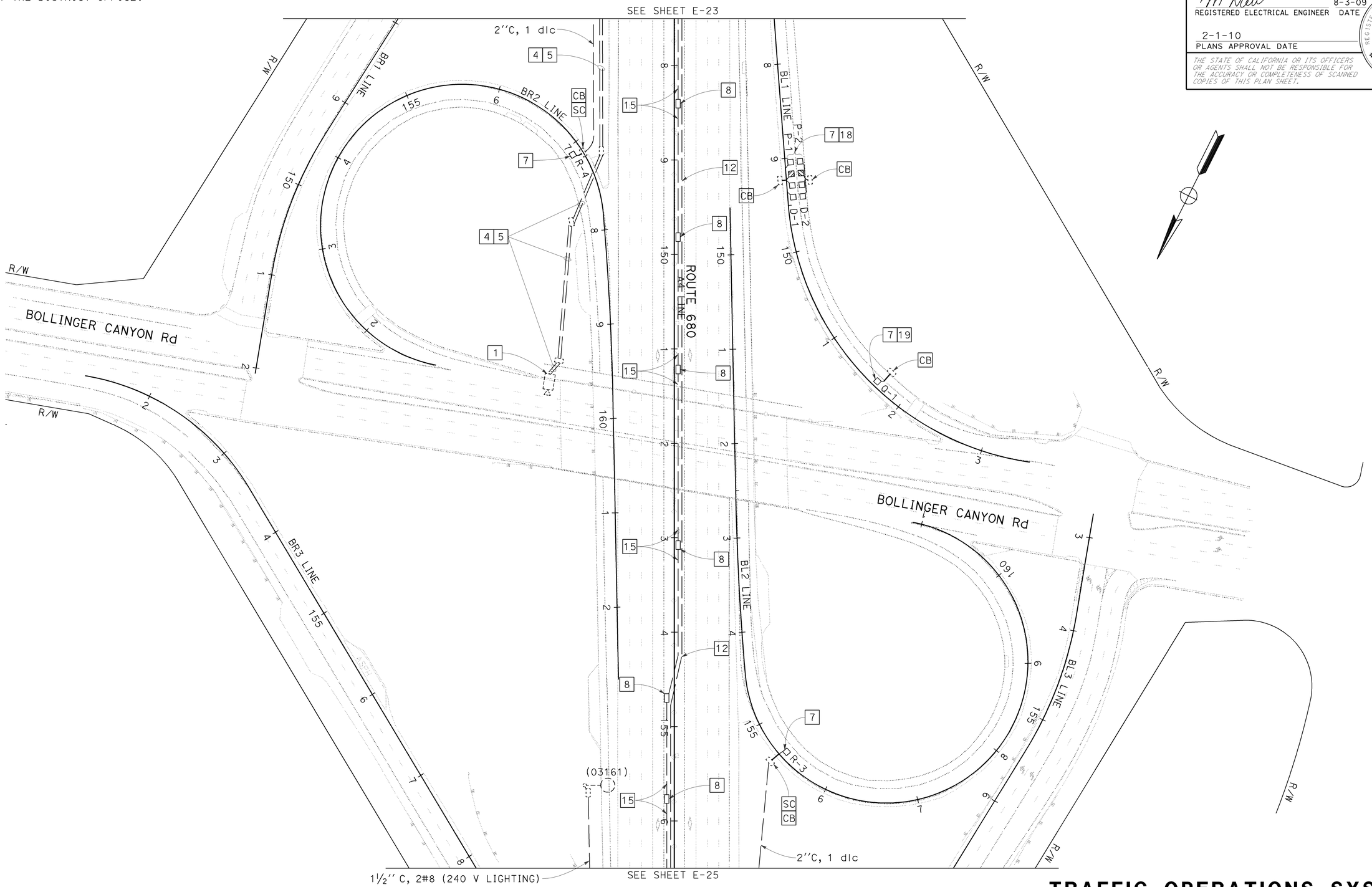

THIS PLAN IS ACCURATE FOR ELECTRICAL WORK ONLY

FOR NOTES, ABBREVIATIONS AND LEGEND, SEE SHEET E-1

TRAFFIC OPERATIONS SYSTEM

SCALE: 1" = 50'

E-24

STATE OF CALIFORNIA - DEPARTMENT OF TRANSPORTATION

Caltrans

ELECTRICAL

FUNCTIONAL SUPERVISOR: LAI HONG CHIU

CALCULATED-DESIGNED BY: PARWIZ KHAZI

CHECKED BY: MAHMOOD NOII

REVISED BY

DATE REVISED

LAST REVISION | DATE PLOTTED => 04-FEB-2010 | TIME PLOTTED => 14:36

10-07-09

BORDER LAST REVISED 4/11/2008

RELATIVE BORDER SCALE IS IN INCHES 0 1 2 3

USERNAME => s135318
DGN FILE => 44470uua024.dgn

CU 04236

EA 4470U1

Dist	COUNTY	ROUTE	POST MILES TOTAL PROJECT	SHEET No.	TOTAL SHEETS
04	CC	680	0.0/R12.8	390	504

REGISTERED ELECTRICAL ENGINEER 8-3-09 DATE

2-1-10
PLANS APPROVAL DATE

REGISTERED PROFESSIONAL ENGINEER Mahmood Noii No. 13717 Exp 6-30-11 ELECT STATE OF CALIFORNIA

THE STATE OF CALIFORNIA OR ITS OFFICERS OR AGENTS SHALL NOT BE RESPONSIBLE FOR THE ACCURACY OR COMPLETENESS OF SCANNED COPIES OF THIS PLAN SHEET.

FOR ACCURATE RIGHT OF WAY DATA,
CONTACT RIGHT OF WAY ENGINEERING
AT THE DISTRICT OFFICE.

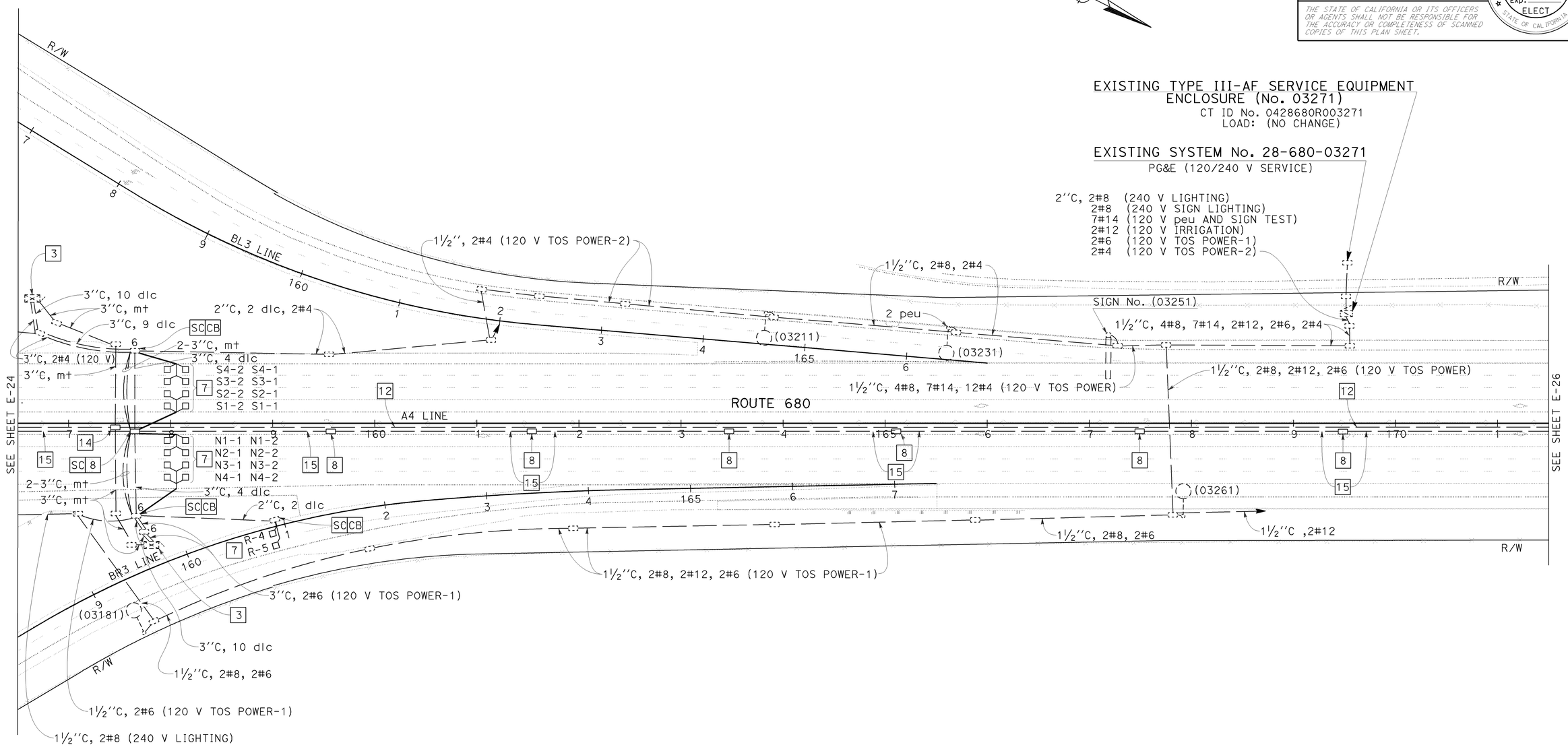

THIS PLAN IS ACCURATE FOR ELECTRICAL WORK ONLY

FOR NOTES, ABBREVIATIONS AND LEGEND, SEE SHEET E-1

TRAFFIC OPERATIONS SYSTEM

SCALE: 1" = 50'

E-25

STATE OF CALIFORNIA - DEPARTMENT OF TRANSPORTATION
Caltrans
ELECTRICAL

FUNCTIONAL SUPERVISOR: LAI HONG CHIU
CALCULATED-DESIGNED BY: PARWIZ KHAZI
CHECKED BY: MAHMOOD NOII
REVISED BY
DATE REVISED

LAST REVISION 10-07-09
DATE PLOTTED => 04-FEB-2010
TIME PLOTTED => 14:36

Dist	COUNTY	ROUTE	POST MILES TOTAL PROJECT	SHEET No.	TOTAL SHEETS
04	CC	680	0.0/R12.8	391	504

REGISTERED ELECTRICAL ENGINEER 8-3-09 DATE

2-1-10
PLANS APPROVAL DATE

REGISTERED PROFESSIONAL ENGINEER Mahmood Noii No. 13717 Exp 6-30-11 ELECT STATE OF CALIFORNIA

THE STATE OF CALIFORNIA OR ITS OFFICERS OR AGENTS SHALL NOT BE RESPONSIBLE FOR THE ACCURACY OR COMPLETENESS OF SCANNED COPIES OF THIS PLAN SHEET.

FOR ACCURATE RIGHT OF WAY DATA, CONTACT RIGHT OF WAY ENGINEERING AT THE DISTRICT OFFICE.

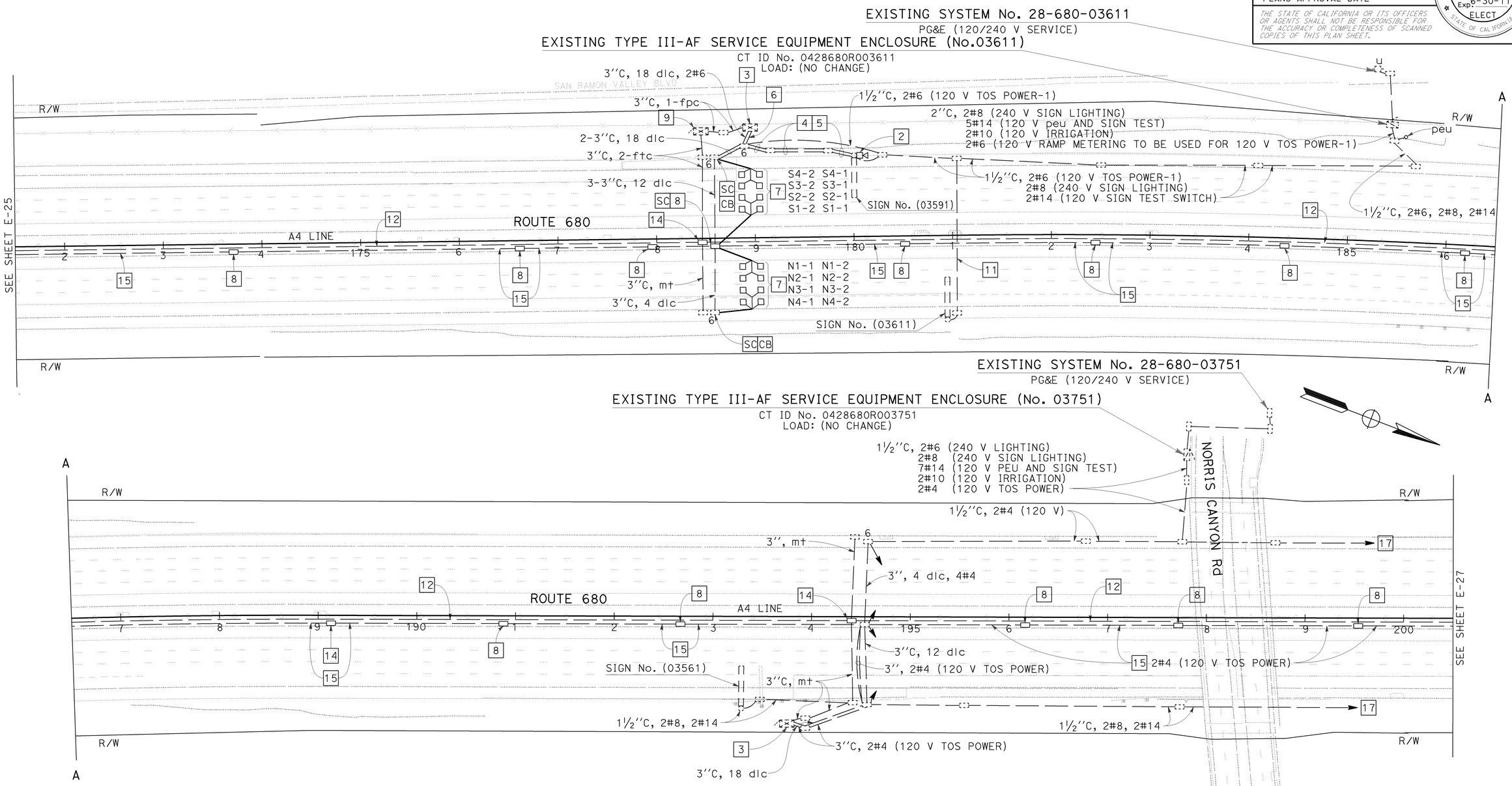

TRAFFIC OPERATIONS SYSTEM

SCALE: 1'' = 50'

THIS PLAN IS ACCURATE FOR ELECTRICAL WORK ONLY

FOR NOTES, ABBREVIATIONS AND LEGEND, SEE SHEET E-1

E-26

STATE OF CALIFORNIA - DEPARTMENT OF TRANSPORTATION
Caltrans
ELECTRICAL

FUNCTIONAL SUPERVISOR: LAI HONG CHIU
CALCULATED-DESIGNED BY: PARWIZ KHAZI
CHECKED BY: MAHMOOD NOII
REVISED BY
DATE REVISED

LAST REVISION 10-07-09
DATE PLOTTED => 04-FEB-2010
TIME PLOTTED => 14:36

FOR ACCURATE RIGHT OF WAY DATA,
CONTACT RIGHT OF WAY ENGINEERING
AT THE DISTRICT OFFICE.

Dist	COUNTY	ROUTE	POST MILES TOTAL PROJECT	SHEET No.	TOTAL SHEETS
04	CC	680	0.0/R12.8	392	504

REGISTERED ELECTRICAL ENGINEER 8-3-09 DATE

2-1-10
PLANS APPROVAL DATE

REGISTERED PROFESSIONAL ENGINEER
Mahmood Noii
No. 13717
Exp. 6-30-11
ELECT
STATE OF CALIFORNIA

THE STATE OF CALIFORNIA OR ITS OFFICERS OR AGENTS SHALL NOT BE RESPONSIBLE FOR THE ACCURACY OR COMPLETENESS OF SCANNED COPIES OF THIS PLAN SHEET.

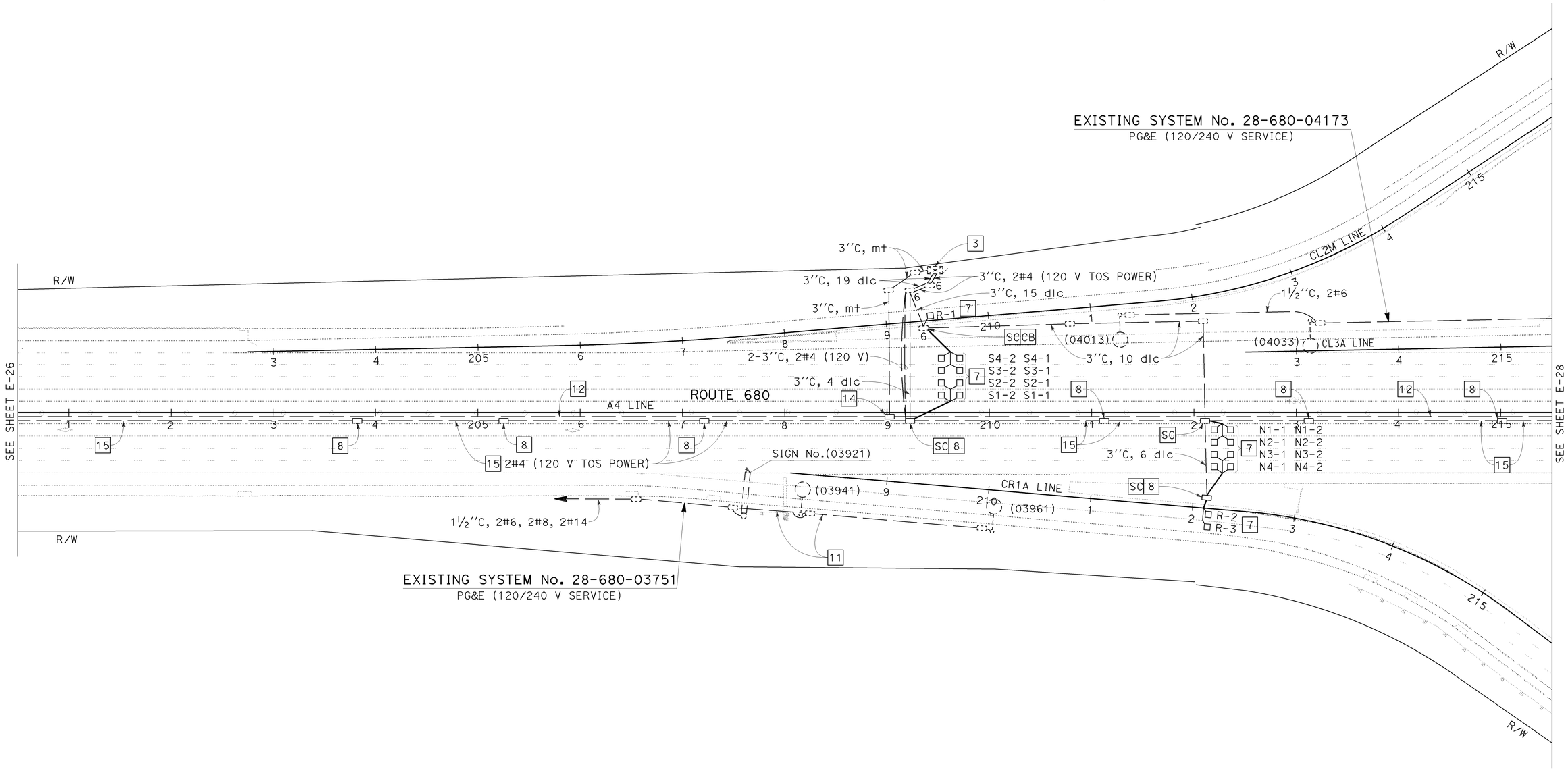

TRAFFIC OPERATIONS SYSTEM

SCALE: 1'' = 50'

THIS PLAN IS ACCURATE FOR ELECTRICAL WORK ONLY

FOR NOTES, ABBREVIATIONS AND LEGEND, SEE SHEET E-1

E-27

STATE OF CALIFORNIA - DEPARTMENT OF TRANSPORTATION
Caltrans
ELECTRICAL

FUNCTIONAL SUPERVISOR: LAI HONG CHIU
CALCULATED-DESIGNED BY: PARWIZ KHAZI
CHECKED BY: MAHMOOD NOII
REVISED BY
DATE REVISED

LAST REVISION DATE PLOTTED => 04-FEB-2010
10-07-09 TIME PLOTTED => 14:36

Dist	COUNTY	ROUTE	POST MILES TOTAL PROJECT	SHEET No.	TOTAL SHEETS
04	CC	680	0.0/R12.8	393	504

REGISTERED ELECTRICAL ENGINEER 8-3-09 DATE

2-1-10
PLANS APPROVAL DATE

REGISTERED PROFESSIONAL ENGINEER Mahmood Noii No. 13717 Exp 6-30-11 ELECT STATE OF CALIFORNIA

THE STATE OF CALIFORNIA OR ITS OFFICERS OR AGENTS SHALL NOT BE RESPONSIBLE FOR THE ACCURACY OR COMPLETENESS OF SCANNED COPIES OF THIS PLAN SHEET.

FOR ACCURATE RIGHT OF WAY DATA, CONTACT RIGHT OF WAY ENGINEERING AT THE DISTRICT OFFICE.

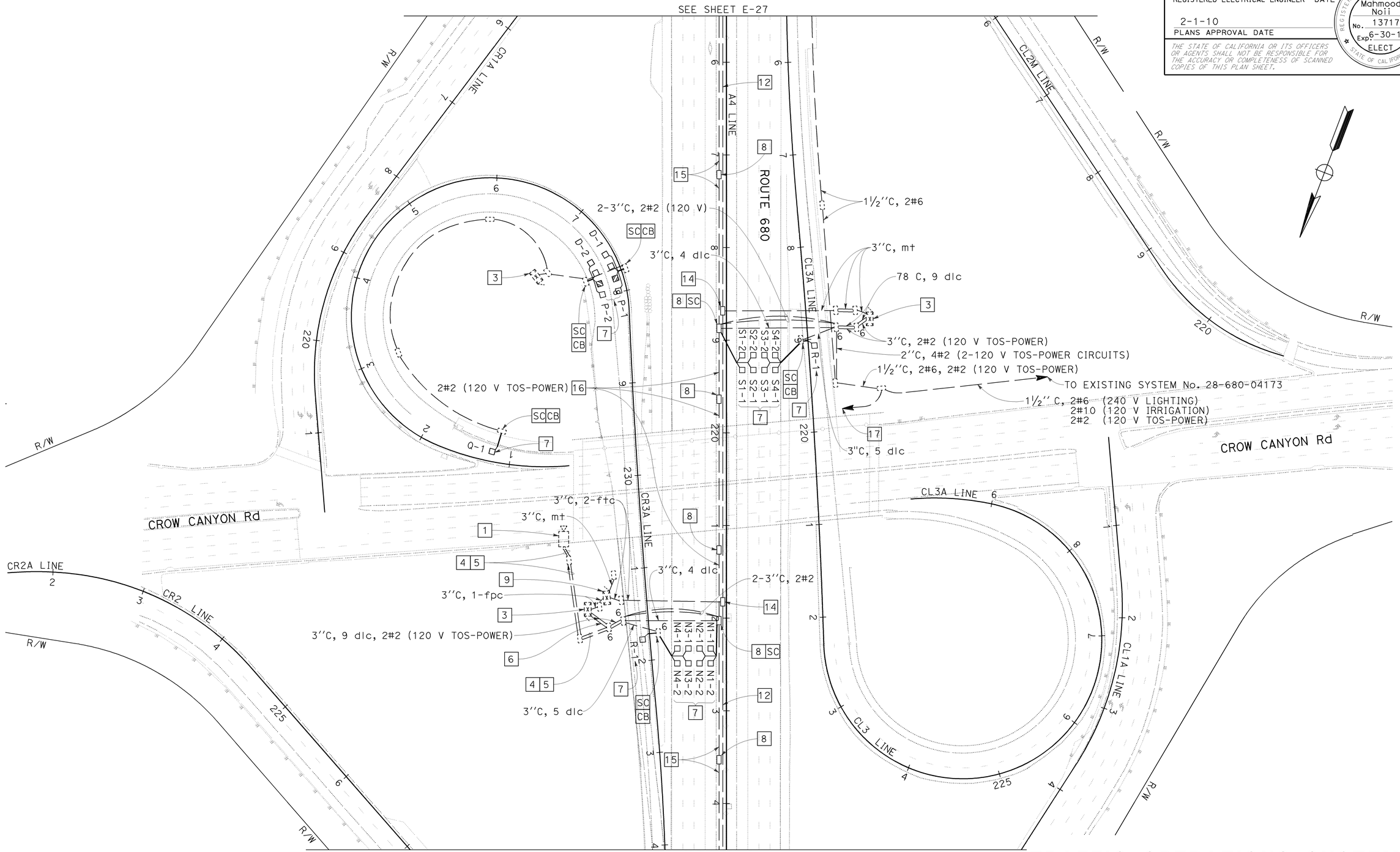

TRAFFIC OPERATIONS SYSTEM

SCALE: 1" = 50'

THIS PLAN IS ACCURATE FOR ELECTRICAL WORK ONLY

FOR NOTES, ABBREVIATIONS AND LEGEND, SEE SHEET E-1

E-28

STATE OF CALIFORNIA - DEPARTMENT OF TRANSPORTATION

Caltrans

ELECTRICAL

FUNCTIONAL SUPERVISOR: LAI HONG CHIU

CALCULATED-DESIGNED BY: PARWIZ KHAZI

CHECKED BY: MAHMOOD NOII

REVISED BY

DATE REVISED

LAST REVISION DATE PLOTTED => 04-FEB-2010
TIME PLOTTED => 14:36

10-07-09

BORDER LAST REVISED 4/11/2008

RELATIVE BORDER SCALE IS IN INCHES 0 1 2 3

USERNAME => s135318
DGN FILE => 4447Ouua028.dgn

CU 04236

EA 4470U1

Dist	COUNTY	ROUTE	POST MILES TOTAL PROJECT	SHEET No.	TOTAL SHEETS
04	CC	680	0.0/R12.8	394	504

REGISTERED ELECTRICAL ENGINEER 8-3-09 DATE

2-1-10
PLANS APPROVAL DATE

REGISTERED PROFESSIONAL ENGINEER Mahmood Noii No. 13717 Exp. 6-30-11 ELECT STATE OF CALIFORNIA

THE STATE OF CALIFORNIA OR ITS OFFICERS OR AGENTS SHALL NOT BE RESPONSIBLE FOR THE ACCURACY OR COMPLETENESS OF SCANNED COPIES OF THIS PLAN SHEET.

FOR ACCURATE RIGHT OF WAY DATA, CONTACT RIGHT OF WAY ENGINEERING AT THE DISTRICT OFFICE.

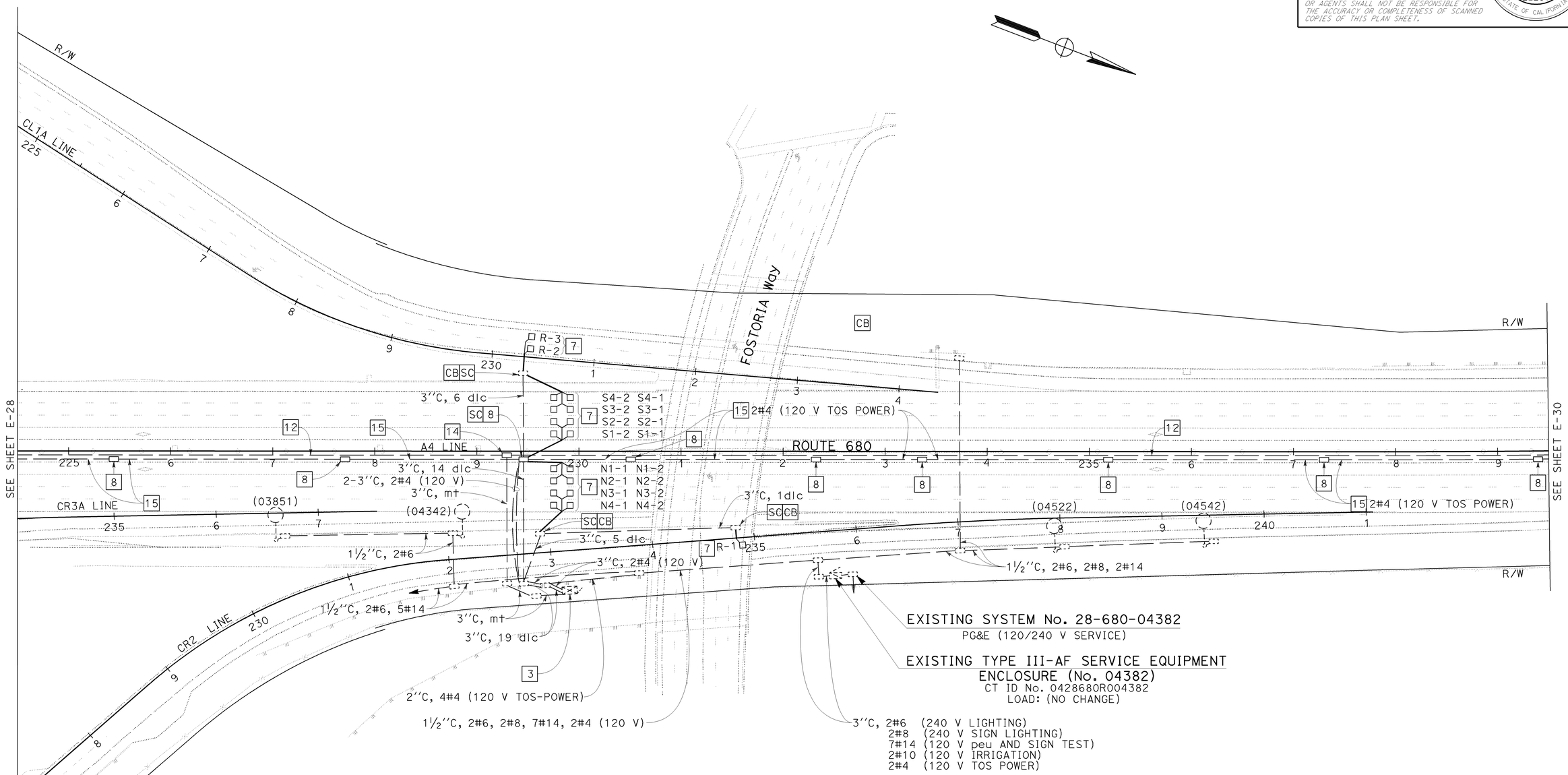

THIS PLAN IS ACCURATE FOR ELECTRICAL WORK ONLY

FOR NOTES, ABBREVIATIONS AND LEGEND, SEE SHEET E-1

TRAFFIC OPERATIONS SYSTEM

SCALE: 1" = 50'

E-29

REVISED BY	DATE REVISED

CALCULATED-DESIGNED BY	CHECKED BY
PARWIZ KHAZI	MAHMOOD NOII

FUNCTIONAL SUPERVISOR: LAI HONG CHIU

STATE OF CALIFORNIA - DEPARTMENT OF TRANSPORTATION

Caltrans

ELECTRICAL

LAST REVISION 10-07-09

DATE PLOTTED => 04-FEB-2010
TIME PLOTTED => 14:36

FOR ACCURATE RIGHT OF WAY DATA,
CONTACT RIGHT OF WAY ENGINEERING
AT THE DISTRICT OFFICE.

Dist	COUNTY	ROUTE	POST MILES TOTAL PROJECT	SHEET No.	TOTAL SHEETS
04	CC	680	0.0/R12.8	395	504

REGISTERED ELECTRICAL ENGINEER 8-3-09 DATE

2-1-10
PLANS APPROVAL DATE

REGISTERED PROFESSIONAL ENGINEER Mahmood Noii No. 13717 Exp. 6-30-11 ELECT STATE OF CALIFORNIA

THE STATE OF CALIFORNIA OR ITS OFFICERS OR AGENTS SHALL NOT BE RESPONSIBLE FOR THE ACCURACY OR COMPLETENESS OF SCANNED COPIES OF THIS PLAN SHEET.

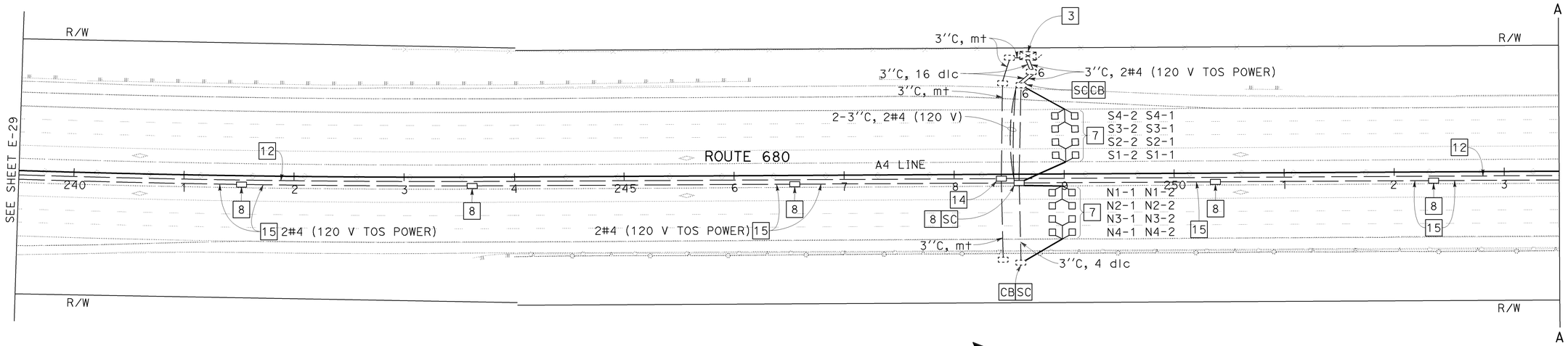

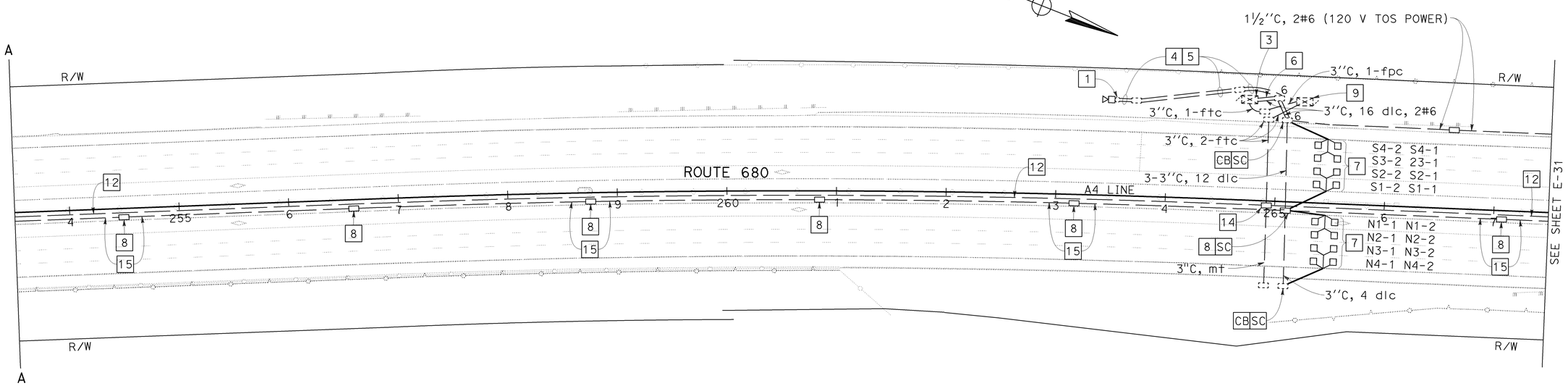

THIS PLAN IS ACCURATE FOR ELECTRICAL WORK ONLY

FOR NOTES, ABBREVIATIONS AND LEGEND, SEE SHEET E-1

TRAFFIC OPERATIONS SYSTEM

SCALE: 1'' = 50'

E-30

STATE OF CALIFORNIA - DEPARTMENT OF TRANSPORTATION
Caltrans
ELECTRICAL

FUNCTIONAL SUPERVISOR: LAI HONG CHIU
CALCULATED-DESIGNED BY: PARWIZ KHAZI
CHECKED BY: MAHMOOD NOII
REVISED BY
DATE REVISED

LAST REVISION 10-07-09
DATE PLOTTED => 04-FEB-2010
TIME PLOTTED => 13:41

Dist	COUNTY	ROUTE	POST MILES TOTAL PROJECT	SHEET No.	TOTAL SHEETS
04	CC	680	0.0/R12.8	396	504

REGISTERED ELECTRICAL ENGINEER 8-3-09 DATE

2-1-10
PLANS APPROVAL DATE

REGISTERED PROFESSIONAL ENGINEER Mahmood Noii No. 13717 Exp 6-30-11 ELECT STATE OF CALIFORNIA

THE STATE OF CALIFORNIA OR ITS OFFICERS OR AGENTS SHALL NOT BE RESPONSIBLE FOR THE ACCURACY OR COMPLETENESS OF SCANNED COPIES OF THIS PLAN SHEET.

FOR ACCURATE RIGHT OF WAY DATA,
CONTACT RIGHT OF WAY ENGINEERING
AT THE DISTRICT OFFICE.

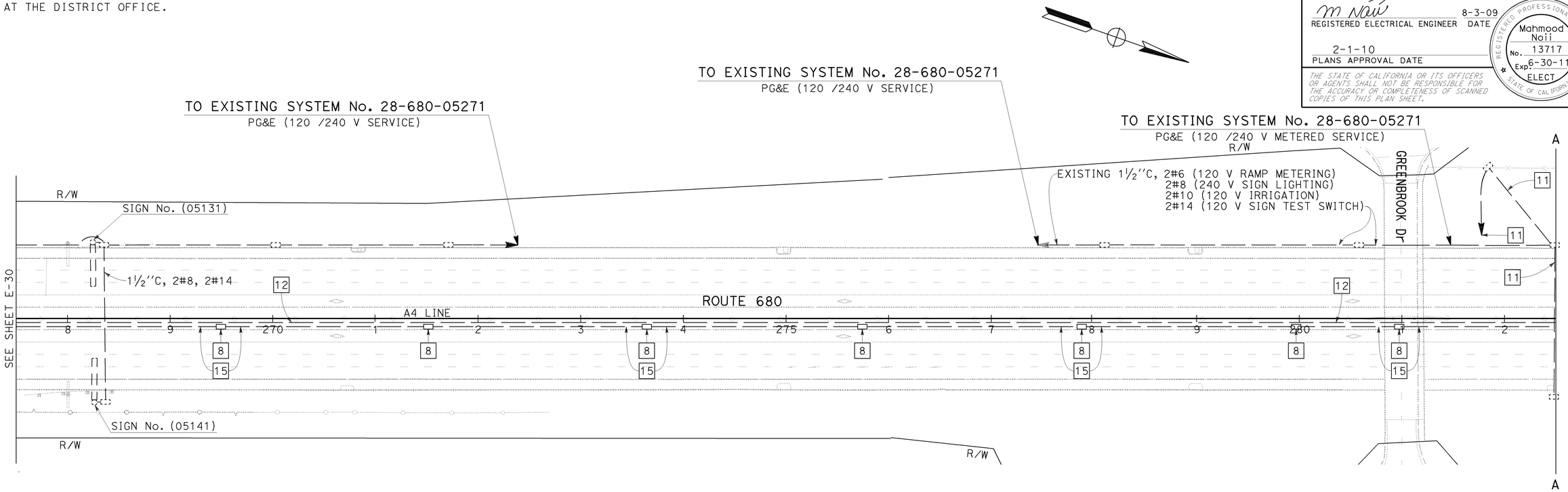

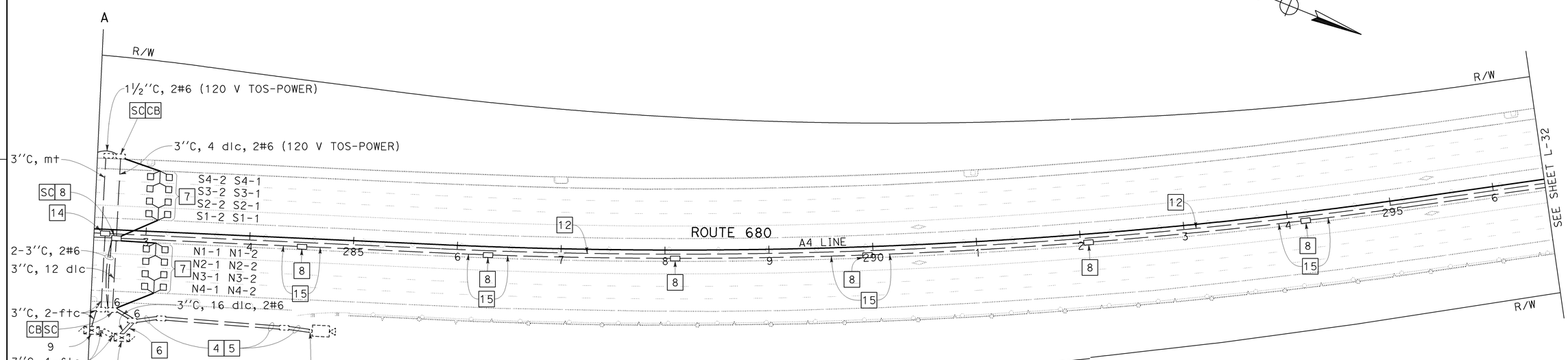

THIS PLAN IS ACCURATE FOR ELECTRICAL WORK ONLY

FOR NOTES, ABBREVIATIONS AND LEGEND, SEE SHEET E-1

TRAFFIC OPERATIONS SYSTEM

SCALE: 1'' = 50'

E-31

STATE OF CALIFORNIA - DEPARTMENT OF TRANSPORTATION
Caltrans
ELECTRICAL

FUNCTIONAL SUPERVISOR: LAI HONG CHIU
CALCULATED-DESIGNED BY: PARWIZ KHAZI
CHECKED BY: MAHMOOD NOII
REVISED BY
DATE REVISED

LAST REVISION 10-07-09
DATE PLOTTED => 04-FEB-2010
TIME PLOTTED => 13:42

Dist	COUNTY	ROUTE	POST MILES TOTAL PROJECT	SHEET No.	TOTAL SHEETS
04	CC	680	0.0/R12.8	397	504

REGISTERED ELECTRICAL ENGINEER 8-3-09 DATE

2-1-10
PLANS APPROVAL DATE

REGISTERED PROFESSIONAL ENGINEER Mahmood Noii No. 13717 Exp. 6-30-11 ELECT STATE OF CALIFORNIA

THE STATE OF CALIFORNIA OR ITS OFFICERS OR AGENTS SHALL NOT BE RESPONSIBLE FOR THE ACCURACY OR COMPLETENESS OF SCANNED COPIES OF THIS PLAN SHEET.

FOR ACCURATE RIGHT OF WAY DATA,
CONTACT RIGHT OF WAY ENGINEERING
AT THE DISTRICT OFFICE.

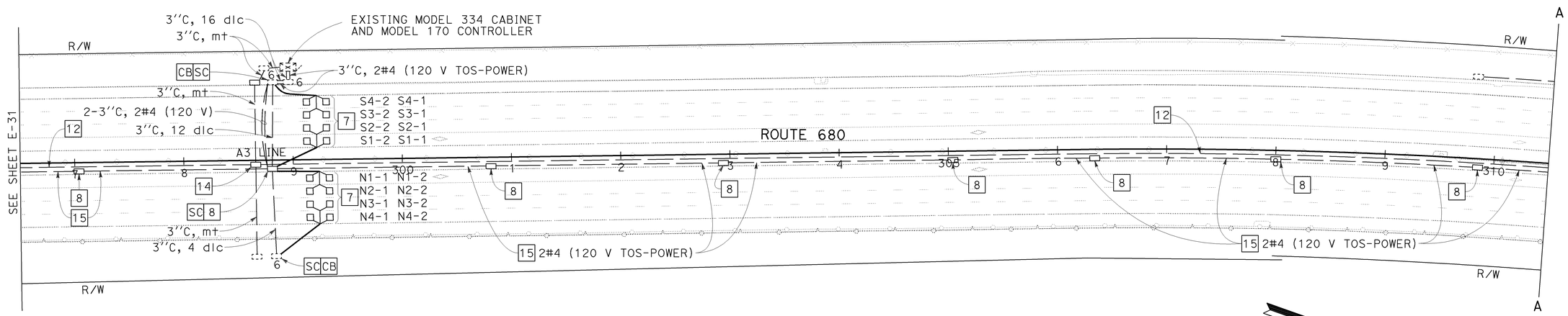

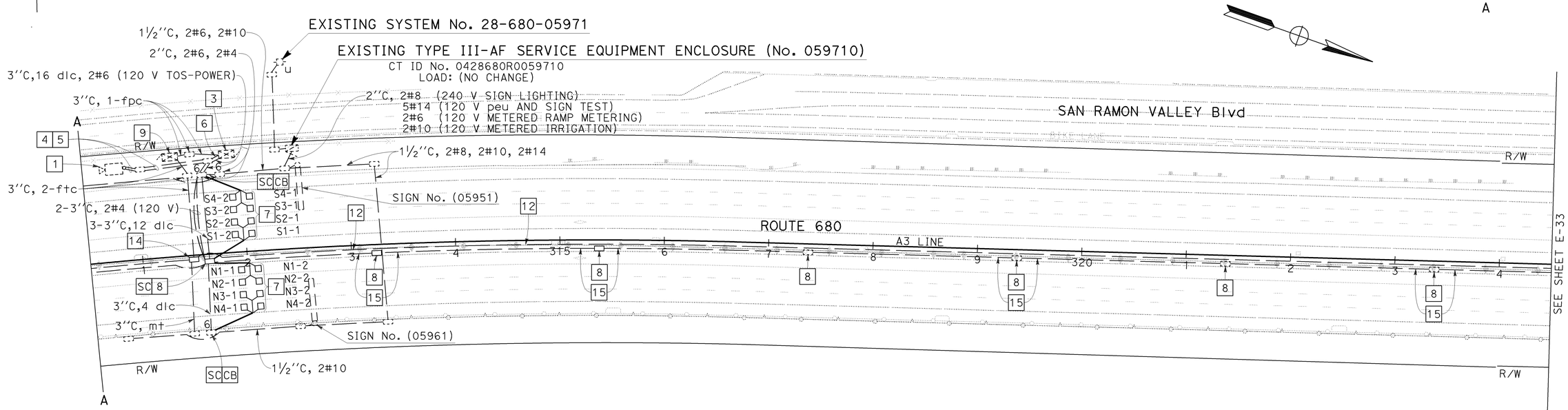

THIS PLAN IS ACCURATE FOR ELECTRICAL WORK ONLY

FOR NOTES, ABBREVIATIONS AND LEGEND, SEE SHEET E-1

TRAFFIC OPERATIONS SYSTEM

SCALE: 1'' = 50'

E-32

STATE OF CALIFORNIA - DEPARTMENT OF TRANSPORTATION
Caltrans
ELECTRICAL

FUNCTIONAL SUPERVISOR: LAI HONG CHIU
CALCULATED-DESIGNED BY: PARWIZ KHAZI
CHECKED BY: MAHMOOD NOII
REVISED BY
DATE REVISED

LAST REVISION DATE PLOTTED => 04-FEB-2010
TIME PLOTTED => 13:42
10-07-09

BORDER LAST REVISED 4/11/2008
RELATIVE BORDER SCALE IS IN INCHES 0 1 2 3
USERNAME => trmnguye
DGN FILE => 44470uua032.dgn
CU 04236
EA 4470U1

Dist	COUNTY	ROUTE	POST MILES TOTAL PROJECT	SHEET No.	TOTAL SHEETS
04	CC	680	0.0/R12.8	398	504

REGISTERED ELECTRICAL ENGINEER 8-3-09 DATE

2-1-10
PLANS APPROVAL DATE

REGISTERED PROFESSIONAL ENGINEER Mahmood Noii No. 13717 Exp. 6-30-11 ELECT STATE OF CALIFORNIA

THE STATE OF CALIFORNIA OR ITS OFFICERS OR AGENTS SHALL NOT BE RESPONSIBLE FOR THE ACCURACY OR COMPLETENESS OF SCANNED COPIES OF THIS PLAN SHEET.

FOR ACCURATE RIGHT OF WAY DATA,
CONTACT RIGHT OF WAY ENGINEERING
AT THE DISTRICT OFFICE.

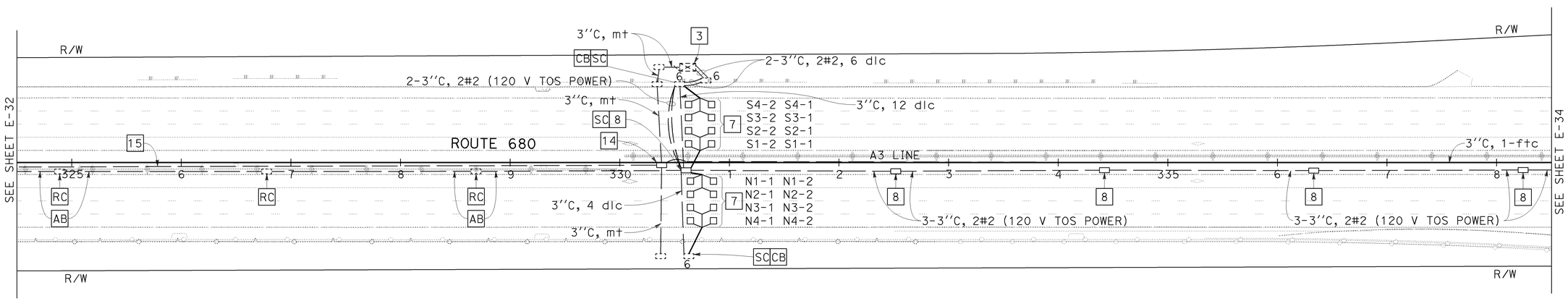

THIS PLAN IS ACCURATE FOR ELECTRICAL WORK ONLY

FOR NOTES, ABBREVIATIONS AND LEGEND, SEE SHEET E-1

TRAFFIC OPERATIONS SYSTEM

SCALE: 1'' = 50'

E-33

STATE OF CALIFORNIA - DEPARTMENT OF TRANSPORTATION

Caltrans

ELECTRICAL

FUNCTIONAL SUPERVISOR: LAI HONG CHIU

CALCULATED-DESIGNED BY: HAWA GARDIZI

CHECKED BY: MAHMOOD NOII

REVISED BY

DATE REVISED

LAST REVISION 10-06-09

DATE PLOTTED => 04-FEB-2010
TIME PLOTTED => 13:42

Dist	COUNTY	ROUTE	POST MILES TOTAL PROJECT	SHEET No.	TOTAL SHEETS
04	CC	680	0.0/R12.8	399	504

REGISTERED ELECTRICAL ENGINEER 8-3-09 DATE

2-1-10
PLANS APPROVAL DATE

REGISTERED PROFESSIONAL ENGINEER
Mahmood Noii
No. 13717
Exp. 6-30-11
ELECT
STATE OF CALIFORNIA

THE STATE OF CALIFORNIA OR ITS OFFICERS OR AGENTS SHALL NOT BE RESPONSIBLE FOR THE ACCURACY OR COMPLETENESS OF SCANNED COPIES OF THIS PLAN SHEET.

FOR ACCURATE RIGHT OF WAY DATA,
CONTACT RIGHT OF WAY ENGINEERING
AT THE DISTRICT OFFICE.

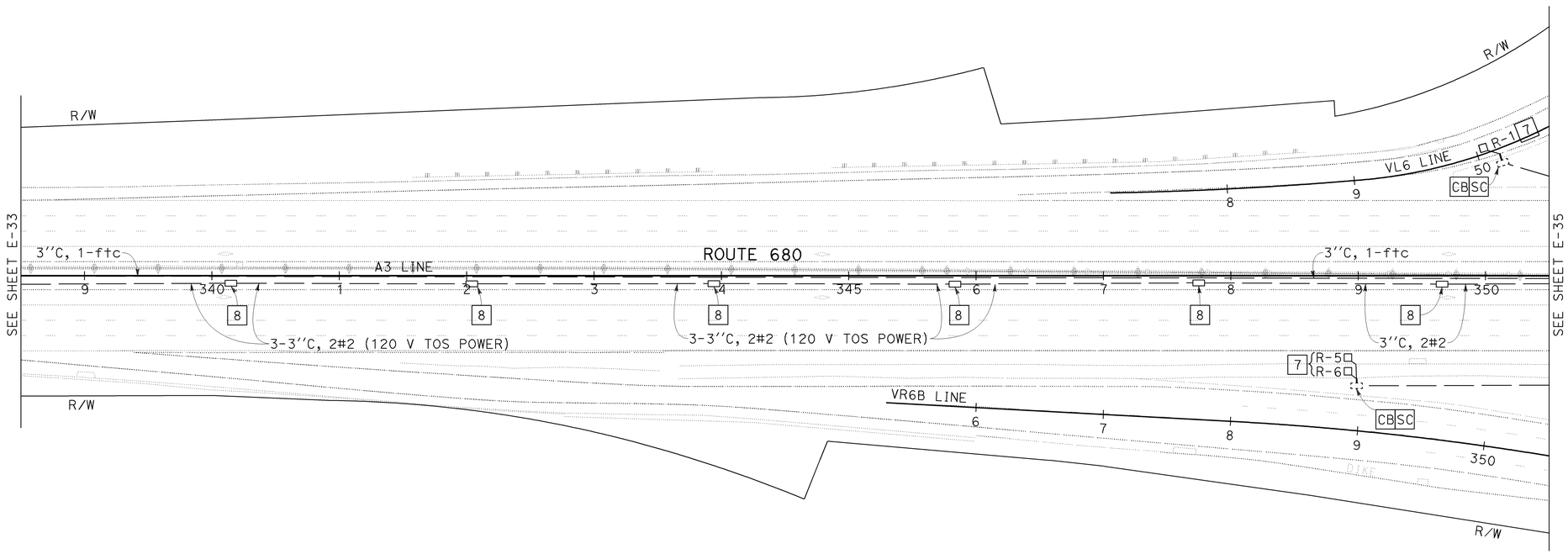

THIS PLAN IS ACCURATE FOR ELECTRICAL WORK ONLY

FOR NOTES, ABBREVIATIONS AND LEGEND, SEE SHEET E-1

TRAFFIC OPERATIONS SYSTEM

SCALE: 1" = 50'

E-34

STATE OF CALIFORNIA - DEPARTMENT OF TRANSPORTATION
Caltrans
ELECTRICAL

FUNCTIONAL SUPERVISOR: LAI HONG CHIU
CALCULATED-DESIGNED BY: HAWA GARDIZI
CHECKED BY: MAHMOOD NOII
REVISED BY
DATE REVISED

LAST REVISION 07-30-09
DATE PLOTTED => 04-FEB-2010
TIME PLOTTED => 13:42

FOR ACCURATE RIGHT OF WAY DATA,
CONTACT RIGHT OF WAY ENGINEERING
AT THE DISTRICT OFFICE.

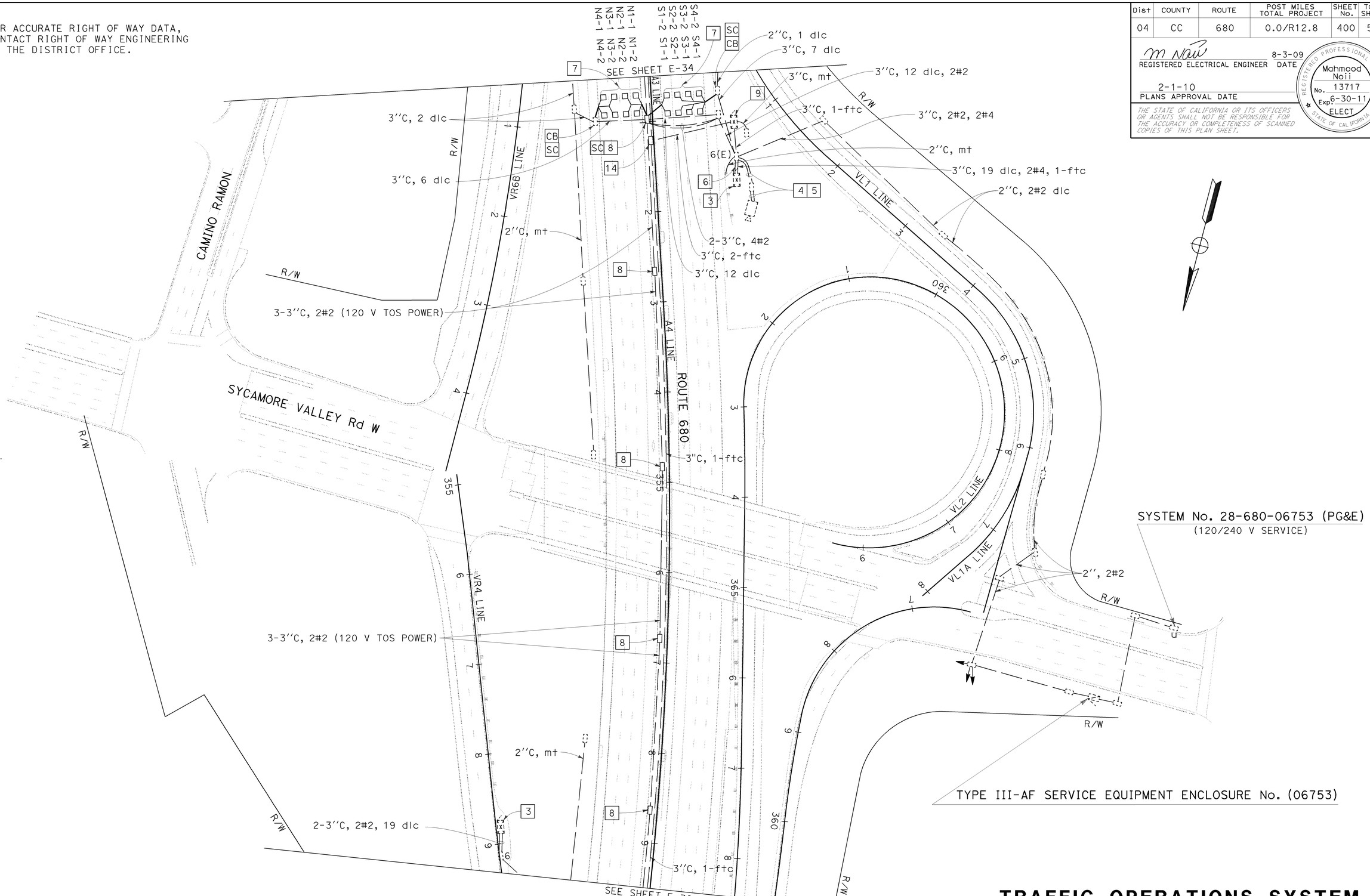

Dist	COUNTY	ROUTE	POST MILES TOTAL PROJECT	SHEET No.	TOTAL SHEETS
04	CC	680	0.0/R12.8	400	504

REGISTERED ELECTRICAL ENGINEER 8-3-09 DATE

2-1-10
PLANS APPROVAL DATE

REGISTERED PROFESSIONAL ENGINEER
Mahmood Noii
No. 13717
Exp. 6-30-11
ELECT
STATE OF CALIFORNIA

THE STATE OF CALIFORNIA OR ITS OFFICERS OR AGENTS SHALL NOT BE RESPONSIBLE FOR THE ACCURACY OR COMPLETENESS OF SCANNED COPIES OF THIS PLAN SHEET.

TRAFFIC OPERATIONS SYSTEM

SCALE: 1" = 50'

THIS PLAN IS ACCURATE FOR ELECTRICAL WORK ONLY

FOR NOTES, ABBREVIATIONS AND LEGEND, SEE SHEET E-1

E-35

STATE OF CALIFORNIA - DEPARTMENT OF TRANSPORTATION
Caltrans
ELECTRICAL

FUNCTIONAL SUPERVISOR: LAI HONG CHIU
CALCULATED-DESIGNED BY: HAWA GARDIZI
CHECKED BY: MAHMOOD NOII
REVISED BY
DATE REVISED

LAST REVISION 07-30-09
DATE PLOTTED => 04-FEB-2010
TIME PLOTTED => 13:42