Dist	COUNTY	ROUTE	POST MILES TOTAL PROJECT	SHEET No.	TOTAL SHEETS
04	CC	680	0.0/R12.8	101	504

Han-Bin Liang 06/22/09
REGISTERED CIVIL ENGINEER DATE

2-1-10
PLANS APPROVAL DATE

REGISTERED PROFESSIONAL ENGINEER
HAN-BIN LIANG
No. C 48404
Exp. 6/30/10
CIVIL
STATE OF CALIFORNIA

THE STATE OF CALIFORNIA OR ITS OFFICERS OR AGENTS SHALL NOT BE RESPONSIBLE FOR THE ACCURACY OR COMPLETENESS OF SCANNED COPIES OF THIS PLAN SHEET.

WRECO
1243 ALPINE ROAD
SUITE 108
WALNUT CREEK, CA 94596

CALTRANS
111 GRAND AVENUE
OAKLAND, CA 94612

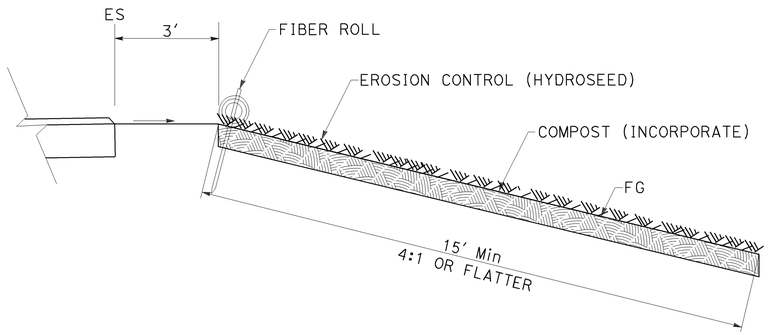

SECTION

BIOFILTRATION STRIP

EROSION CONTROL DETAILS

NO SCALE

ECD-1

CALCULATED-DESIGNED BY	RAJA PERIKETI	REVISED BY	RP
CHECKED BY	CHRIS SEWELL	DATE REVISED	7/31/09
CONSULTANT FUNCTIONAL SUPERVISOR	HAN-BIN LIANG		
STATE OF CALIFORNIA - DEPARTMENT OF TRANSPORTATION	Caltrans		

LAST REVISION DATE PLOTTED => 04-FEB-2010
07-31-09 TIME PLOTTED => 08:25

Dist	COUNTY	ROUTE	POST MILES TOTAL PROJECT	SHEET No.	TOTAL SHEETS
04	CC	680	0.0/R12.8	102	504

Han-Bin Liang 06/22/09
REGISTERED CIVIL ENGINEER DATE

REGISTERED PROFESSIONAL ENGINEER
HAN-BIN LIANG
No. C 48404
Exp. 6/30/10
CIVIL
STATE OF CALIFORNIA

2-1-10
PLANS APPROVAL DATE

THE STATE OF CALIFORNIA OR ITS OFFICERS OR AGENTS SHALL NOT BE RESPONSIBLE FOR THE ACCURACY OR COMPLETENESS OF SCANNED COPIES OF THIS PLAN SHEET.

WRECO
1243 ALPINE ROAD
SUITE 108
WALNUT CREEK, CA 94596

CALTRANS
111 GRAND AVENUE
OAKLAND, CA 94612

SHEET No.	NB/SB	FIBER ROLLS	EROSION CONTROL (HYDROSEED)	DESCRIPTION
		LF	AC	
EC-2	SB	5,966	1.63	A 18+50 TO 40+20, WEST SIDE OF THE FREEWAY
EC-12	SB	816	0.38	A3 394+00 TO 397+50, WEST SIDE OF THE FREEWAY
EC-13	SB	440	0.11	A3 417+14 TO 419+52, WEST SIDE OF THE FREEWAY
EC-13	NB	998	0.27	A3 415+16 TO 420+09, EAST SIDE OF THE FREEWAY
EC-14	SB	645	0.21	A3 461+10 TO 464+50, WEST SIDE OF THE FREEWAY
EC-15	SB	2,410	1.22	A3 579+80 TO 589+50, WEST SIDE OF THE FREEWAY
EC-16	SB	507	0.29	A3 589+50 TO 593+00, WEST SIDE OF THE FREEWAY
EC-17	SB	1,491	0.43	A3 635+79 TO 641+26, WEST SIDE OF THE FREEWAY
	SUBTOTAL	13,273	4.54	

BIOFILTRATION STRIP (N)

LOCATION	FIBER ROLLS	EROSION CONTROL (HYDROSEED)	COMPOST (INCORPORATE)
	LF	EA	SQYD
A 14+00 TO 23+85, EAST SIDE OF THE FREEWAY	985	0.35	1692
A4 75+50 TO 79+00, WEST SIDE OF THE FREEWAY	350	0.12	601
A4 82+00 TO 87+00, WEST SIDE OF THE FREEWAY	500	0.18	859
A4 87+00 TO 92+00, WEST SIDE OF THE FREEWAY	500	0.18	859
A4 117+00 TO 118+00, WEST SIDE OF THE FREEWAY	100	0.04	172
A4 125+05 TO 130+00, EAST SIDE OF THE FREEWAY	495	0.17	679
A4 143+70 TO 148+50, EAST SIDE OF THE FREEWAY	480	0.17	828
BL2 154+00 TO 161+00, WEST SIDE OF THE FREEWAY	700	0.25	1202
BL2 152+80 TO 156+15, EAST SIDE OF THE FREEWAY	335	0.12	575
A4 155+30 TO 159+20, EAST SIDE OF THE FREEWAY	390	0.17	807
A4 157+50 TO 161+90, WEST SIDE OF THE FREEWAY	440	0.20	962
A4 213+00 TO 215+35, WEST SIDE OF THE FREEWAY	235	0.09	429
A4 239+50 TO 245+00, WEST SIDE OF THE FREEWAY	550	0.21	1031
A3 318+80 TO 334+20, WEST SIDE OF THE FREEWAY	1540	0.55	2645
DR3 400+00 TO 403+00, EAST SIDE OF THE FREEWAY	300	0.11	515
A4 659+50 TO 661+00, EAST SIDE OF THE FREEWAY	150	0.05	285
SUBTOTAL	8,050	2.96	14,141

(N) = NOT A SEPARATE PAY ITEM, FOR INFORMATION ONLY.

GRAND TOTAL

FIBER ROLLS	EROSION CONTROL (HYDROSEED)	COMPOST (INCORPORATE)
LF	AC	SQYD
21,323	7.50	14,141

EROSION CONTROL QUANTITIES

ECQ-1

STATE OF CALIFORNIA - DEPARTMENT OF TRANSPORTATION
Caltrans

CONSULTANT FUNCTIONAL SUPERVISOR: HAN-BIN LIANG
CALCULATED-DESIGNED BY: RAJA PERIKETI
CHECKED BY: CHRIS SEWELL
REVISED BY: RP
DATE REVISED: 07/31/09
CS 11/25/09

LAST REVISION DATE PLOTTED => 04-FEB-2010
TIME PLOTTED => 10:29

BORDER LAST REVISED 4/11/2008
RELATIVE BORDER SCALE IS IN INCHES 0 1 2 3
USERNAME => trmikesl
DGN FILE => 44470ugh001.dgn
CU 04236
EA 4470U1

Dist	COUNTY	ROUTE	POST MILES TOTAL PROJECT	SHEET No.	TOTAL SHEETS
04	CC	680	0.0/R12.8	103	504

Han-Bin Liang 06/22/09
REGISTERED CIVIL ENGINEER DATE

2-1-10
PLANS APPROVAL DATE

REGISTERED PROFESSIONAL ENGINEER
HAN-BIN LIANG
No. C 48404
Exp. 6/30/10
CIVIL
STATE OF CALIFORNIA

THE STATE OF CALIFORNIA OR ITS OFFICERS OR AGENTS SHALL NOT BE RESPONSIBLE FOR THE ACCURACY OR COMPLETENESS OF SCANNED COPIES OF THIS PLAN SHEET.

WRECO
1243 ALPINE ROAD
SUITE 108
WALNUT CREEK, CA 94596

CALTRANS
111 GRAND AVENUE
OAKLAND, CA 94612

- FOR ACCURATE RIGHT OF WAY AND ACCESS DATA, CONTACT RIGHT OF WAY ENGINEERING AT THE DISTRICT OFFICE.

LEGEND

- Exist STORM DRAIN
- No. — DRAINAGE SYSTEM No.
- DRAINAGE UNIT
- INLET
- Exist INLET
- OVERSIDE DRAIN
- Exist MANHOLE
- PROPOSED WORK
- TFESA — TEMPORARY FENCE (TYPE ESA)

ABBREVIATIONS

SGD	STANDARD GUTTER DEPRESSION
R&R	REMOVE AND REPLACE
w/	WITH
NB	NORTHBOUND
SB	SOUTHBOUND
ESA	ENVIRONMENTALLY SENSITIVE AREA

NOTES

1. FOR UTILITIES, SEE EXISTING UTILITIES PLAN SHEETS.
2. STATION & OFFSET TIES TO DRAINAGE STRUCTURES ARE MEASURED PER DETAIL ON SHEET DD-1.
3. TOP OF GRATE ELEVATION INCLUDES Std GUTTER DEPRESSION, WHERE SPECIFIED.
4. FOR FINISHED GRADE, SEE PROFILES, CONSTRUCTION DETAILS AND PAVEMENT ELEVATION SHEETS.
5. FOR Std GUTTER DEPRESSION SPECIFIED AS R&R, THE Exist SGD IS TO BE REMOVED PRIOR TO CONSTRUCTION OF THE NEW SGD.
6. CONTRACTOR SHALL PROTECT CONCRETE APRONS DURING CONSTRUCTION. ANY DAMAGED APRONS MUST BE REPLACED IN KIND BY THE CONTRACTOR.
7. FOR TEMPORARY DRAINAGE LOCATIONS, DETAILS AND QUANTITIES, SEE DD-8 AND DD-9.
8. FOR TEMPORARY FENCE (TYPE ESA) LOCATIONS AND QUANTITIES, SEE Q SHEETS.

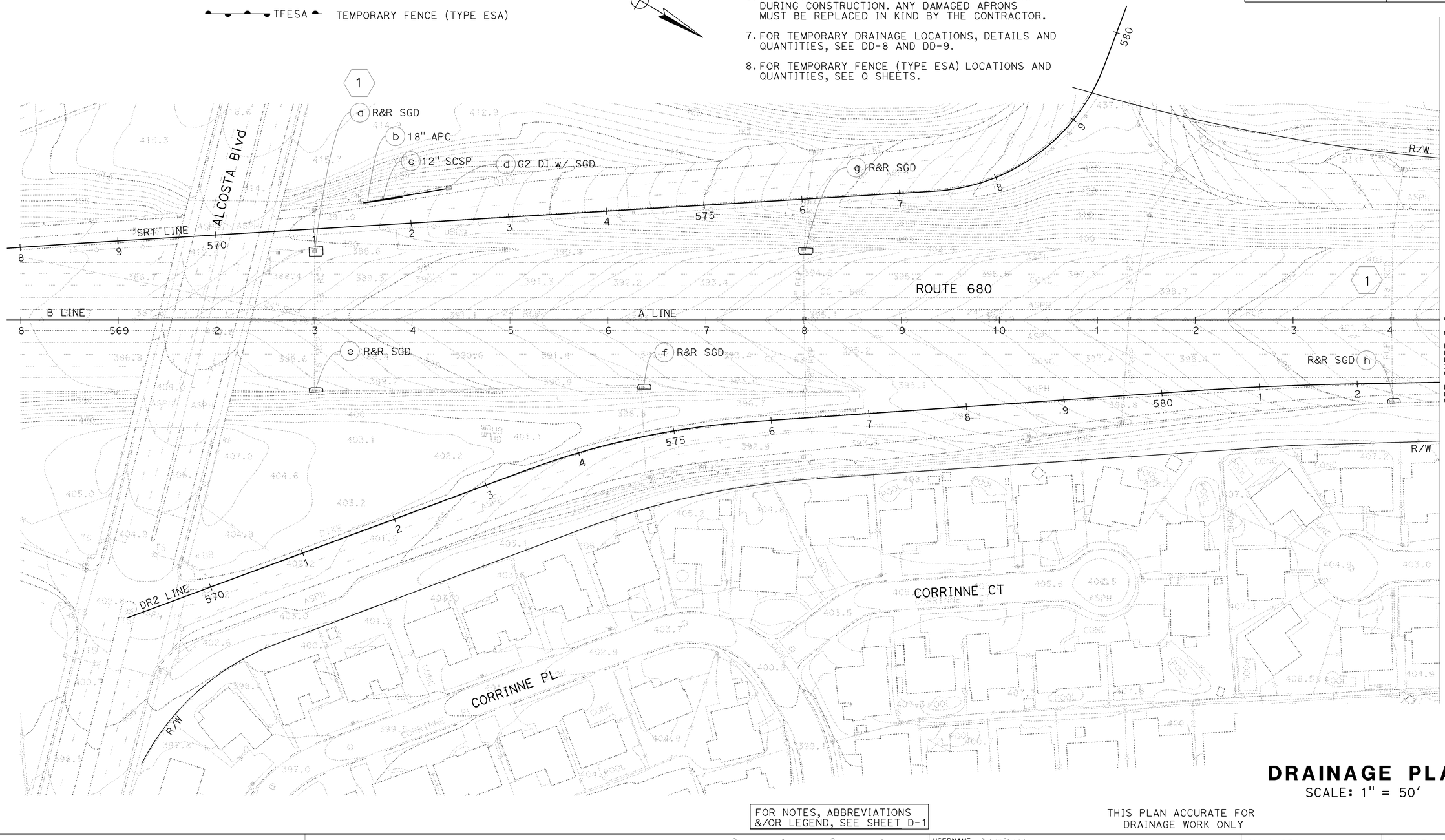

DRAINAGE PLAN

SCALE: 1" = 50'

D-1

FOR NOTES, ABBREVIATIONS &/OR LEGEND, SEE SHEET D-1

THIS PLAN ACCURATE FOR DRAINAGE WORK ONLY

REVISED BY	DATE REVISED
RP	7/31/09

CALCULATED-DESIGNED BY: RAJA PERIKETI
CHECKED BY: CHRIS SEWELL
CONSULTANT FUNCTIONAL SUPERVISOR: HAN-BIN LIANG

STATE OF CALIFORNIA - DEPARTMENT OF TRANSPORTATION
Caltrans

LAST REVISION: DATE PLOTTED => 04-FEB-2010
TIME PLOTTED => 08:58
07-31-09

BORDER LAST REVISED 4/11/2008

RELATIVE BORDER SCALE IS IN INCHES 0 1 2 3

USERNAME => trmikesl
DGN FILE => 44470uig001.dgn

CU 04236

EA 4470U1

Dist	COUNTY	ROUTE	POST MILES TOTAL PROJECT	SHEET No.	TOTAL SHEETS
04	CC	680	0.0/R12.8	104	504

Han-Bin Liang 06/22/09
REGISTERED CIVIL ENGINEER DATE

REGISTERED PROFESSIONAL ENGINEER
HAN-BIN LIANG
No. C 48404
Exp. 6/30/10
CIVIL
STATE OF CALIFORNIA

2-1-10
PLANS APPROVAL DATE

THE STATE OF CALIFORNIA OR ITS OFFICERS OR AGENTS SHALL NOT BE RESPONSIBLE FOR THE ACCURACY OR COMPLETENESS OF SCANNED COPIES OF THIS PLAN SHEET.

WRECO
1243 ALPINE ROAD
SUITE 108
WALNUT CREEK, CA 94596

CALTRANS
111 GRAND AVENUE
OAKLAND, CA 94612

- FOR ACCURATE RIGHT OF WAY AND ACCESS DATA, CONTACT RIGHT OF WAY ENGINEERING AT THE DISTRICT OFFICE.

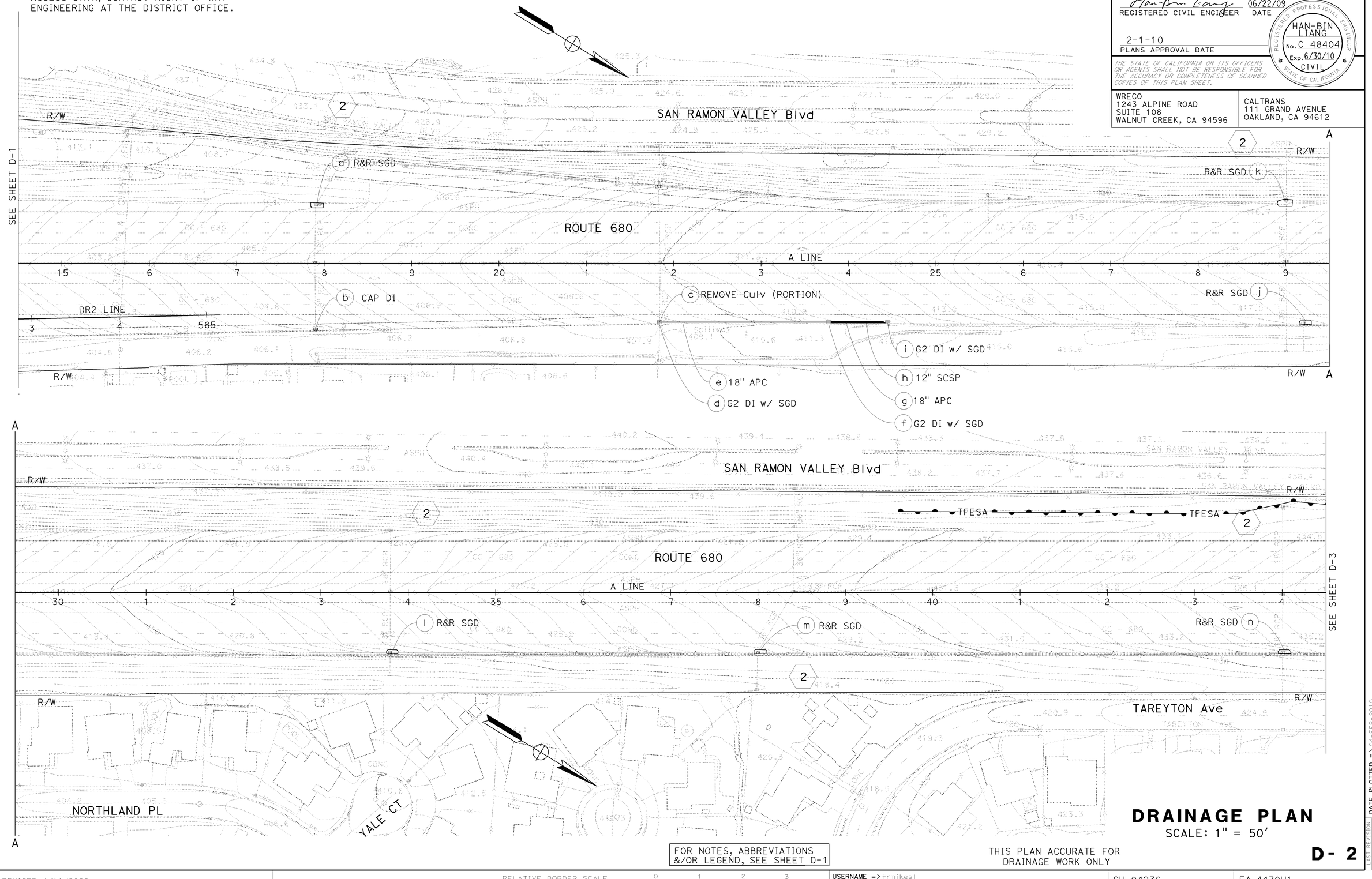

FOR NOTES, ABBREVIATIONS &/OR LEGEND, SEE SHEET D-1

THIS PLAN ACCURATE FOR DRAINAGE WORK ONLY

DRAINAGE PLAN

SCALE: 1" = 50'

D- 2

LAST REVISION DATE PLOTTED => 04-FEB-2010
TIME PLOTTED => 08:58
07-31-09

RP 7/31/09 — REVISED BY / DATE REVISED
RAJA PERIKETI / CHRIS SEWELL — CALCULATED-DESIGNED BY / CHECKED BY
CONSULTANT FUNCTIONAL SUPERVISOR: HAN-BIN LIANG
STATE OF CALIFORNIA - DEPARTMENT OF TRANSPORTATION
Caltrans

BORDER LAST REVISED 4/11/2008

RELATIVE BORDER SCALE IS IN INCHES 0 1 2 3

USERNAME => trmikesl
DGN FILE => 44470uia002.dgn

CU 04236

EA 4470U1

Dist	COUNTY	ROUTE	POST MILES TOTAL PROJECT	SHEET No.	TOTAL SHEETS
04	CC	680	0.0/R12.8	105	504

Han-Bin Liang 06/22/09
REGISTERED CIVIL ENGINEER DATE

REGISTERED PROFESSIONAL ENGINEER
HAN-BIN LIANG
No. C 48404
Exp. 6/30/10
CIVIL
STATE OF CALIFORNIA

2-1-10
PLANS APPROVAL DATE

THE STATE OF CALIFORNIA OR ITS OFFICERS OR AGENTS SHALL NOT BE RESPONSIBLE FOR THE ACCURACY OR COMPLETENESS OF SCANNED COPIES OF THIS PLAN SHEET.

WRECO
1243 ALPINE ROAD
SUITE 108
WALNUT CREEK, CA 94596

CALTRANS
111 GRAND AVENUE
OAKLAND, CA 94612

- FOR ACCURATE RIGHT OF WAY AND ACCESS DATA, CONTACT RIGHT OF WAY ENGINEERING AT THE DISTRICT OFFICE.

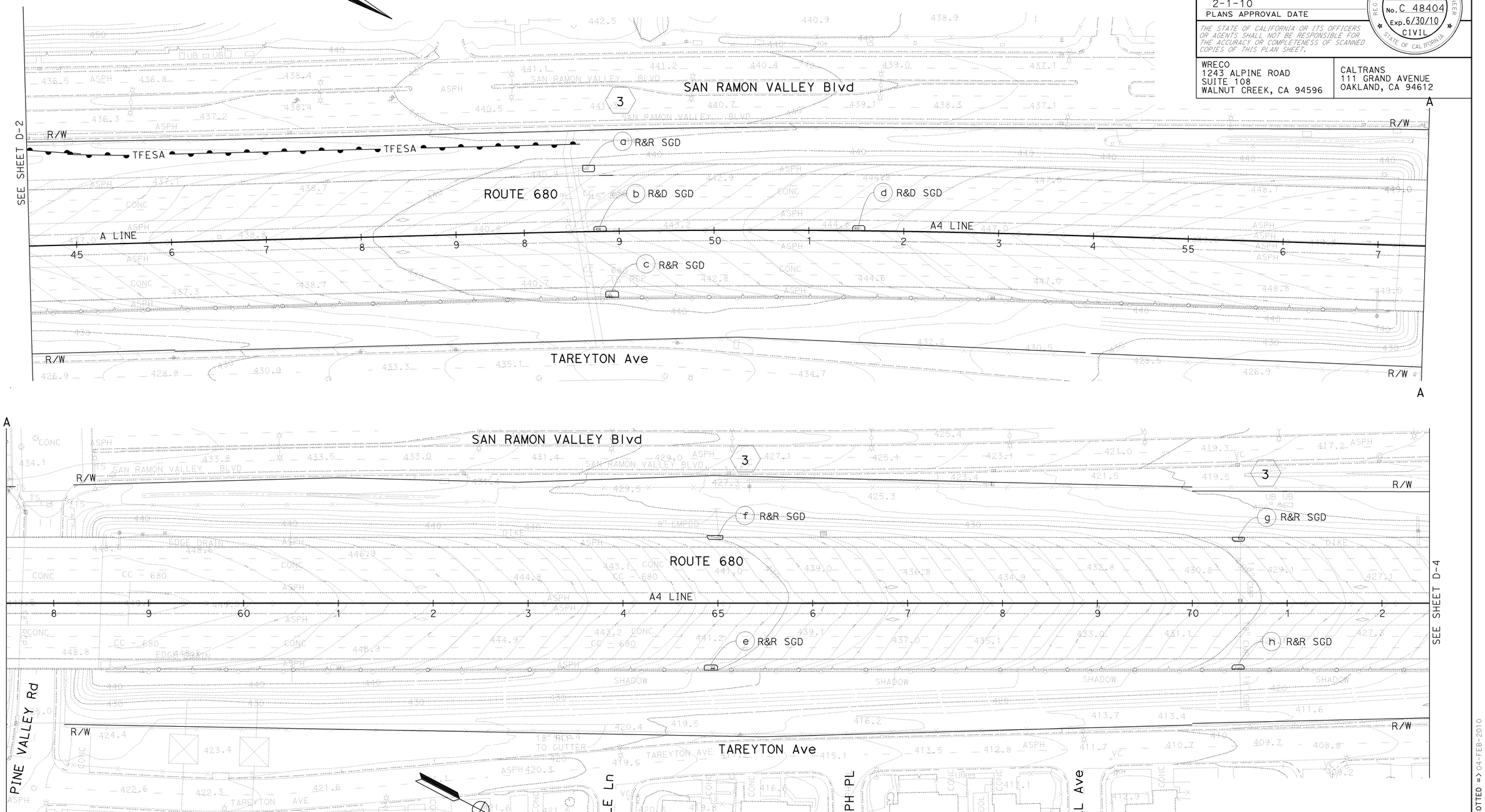

FOR NOTES, ABBREVIATIONS &/OR LEGEND, SEE SHEET D-1

THIS PLAN ACCURATE FOR DRAINAGE WORK ONLY

DRAINAGE PLAN

SCALE: 1" = 50'

D- 3

REVISED BY	DATE REVISED
RP	7/31/09

CALCULATED-DESIGNED BY: RAJA PERIKETI
CHECKED BY: CHRIS SEWELL
CONSULTANT FUNCTIONAL SUPERVISOR: HAN-BIN LIANG
STATE OF CALIFORNIA - DEPARTMENT OF TRANSPORTATION
Caltrans

LAST REVISION: DATE PLOTTED => 04-FEB-2010
TIME PLOTTED => 08:58
07-31-09

BORDER LAST REVISED 4/11/2008

RELATIVE BORDER SCALE IS IN INCHES 0 1 2 3

USERNAME => trmikesl
DGN FILE => 44470uia003.dgn

CU 04236

EA 4470U1

Dist	COUNTY	ROUTE	POST MILES TOTAL PROJECT	SHEET No.	TOTAL SHEETS
04	CC	680	0.0/R12.8	106	504

Han-Bin Liang 06/22/09
REGISTERED CIVIL ENGINEER DATE

2-1-10
PLANS APPROVAL DATE

REGISTERED PROFESSIONAL ENGINEER HAN-BIN LIANG No. C 48404 Exp. 6/30/10 CIVIL STATE OF CALIFORNIA

THE STATE OF CALIFORNIA OR ITS OFFICERS OR AGENTS SHALL NOT BE RESPONSIBLE FOR THE ACCURACY OR COMPLETENESS OF SCANNED COPIES OF THIS PLAN SHEET.

WRECO
1243 ALPINE ROAD
SUITE 108
WALNUT CREEK, CA 94596

CALTRANS
111 GRAND AVENUE
OAKLAND, CA 94612

· FOR ACCURATE RIGHT OF WAY AND ACCESS DATA, CONTACT RIGHT OF WAY ENGINEERING AT THE DISTRICT OFFICE.

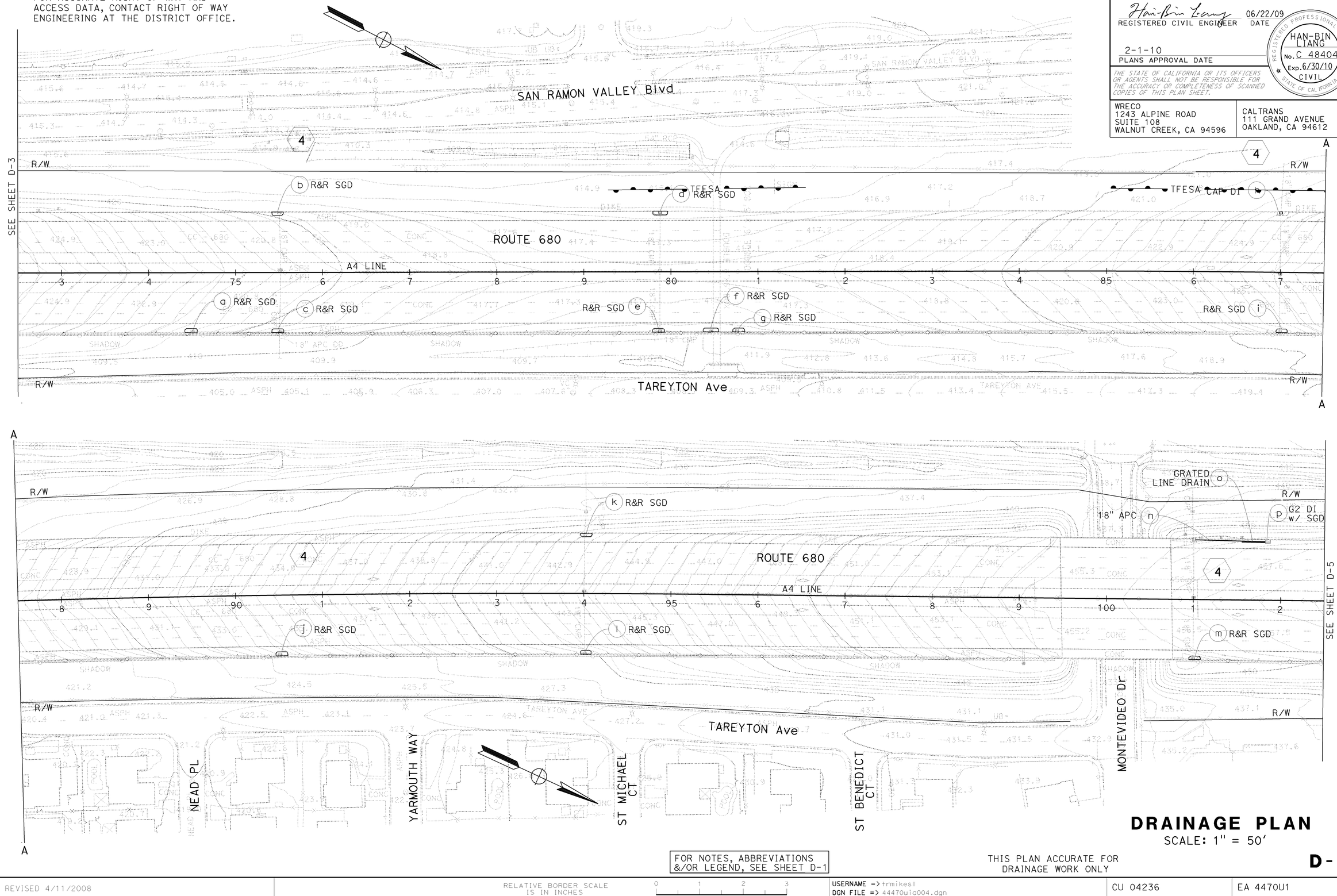

DRAINAGE PLAN

SCALE: 1" = 50'

FOR NOTES, ABBREVIATIONS &/OR LEGEND, SEE SHEET D-1

THIS PLAN ACCURATE FOR DRAINAGE WORK ONLY

D- 4

STATE OF CALIFORNIA - DEPARTMENT OF TRANSPORTATION
Caltrans

CONSULTANT FUNCTIONAL SUPERVISOR: HAN-BIN LIANG
CALCULATED-DESIGNED BY: RAJA PERIKETI
CHECKED BY: CHRIS SEWELL
REVISED BY: RP
DATE REVISED: 7/31/09

LAST REVISION 07-31-09
DATE PLOTTED => 04-FEB-2010
TIME PLOTTED => 08:58

Dist	COUNTY	ROUTE	POST MILES TOTAL PROJECT	SHEET No.	TOTAL SHEETS
04	CC	680	0.0/R12.8	107	504

Han-Bin Liang 06/22/09
REGISTERED CIVIL ENGINEER DATE

HAN-BIN LIANG No. C 48404 Exp. 6/30/10 CIVIL — REGISTERED PROFESSIONAL ENGINEER — STATE OF CALIFORNIA

2-1-10
PLANS APPROVAL DATE

THE STATE OF CALIFORNIA OR ITS OFFICERS OR AGENTS SHALL NOT BE RESPONSIBLE FOR THE ACCURACY OR COMPLETENESS OF SCANNED COPIES OF THIS PLAN SHEET.

WRECO
1243 ALPINE ROAD
SUITE 108
WALNUT CREEK, CA 94596

CALTRANS
111 GRAND AVENUE
OAKLAND, CA 94612

- FOR ACCURATE RIGHT OF WAY AND ACCESS DATA, CONTACT RIGHT OF WAY ENGINEERING AT THE DISTRICT OFFICE.

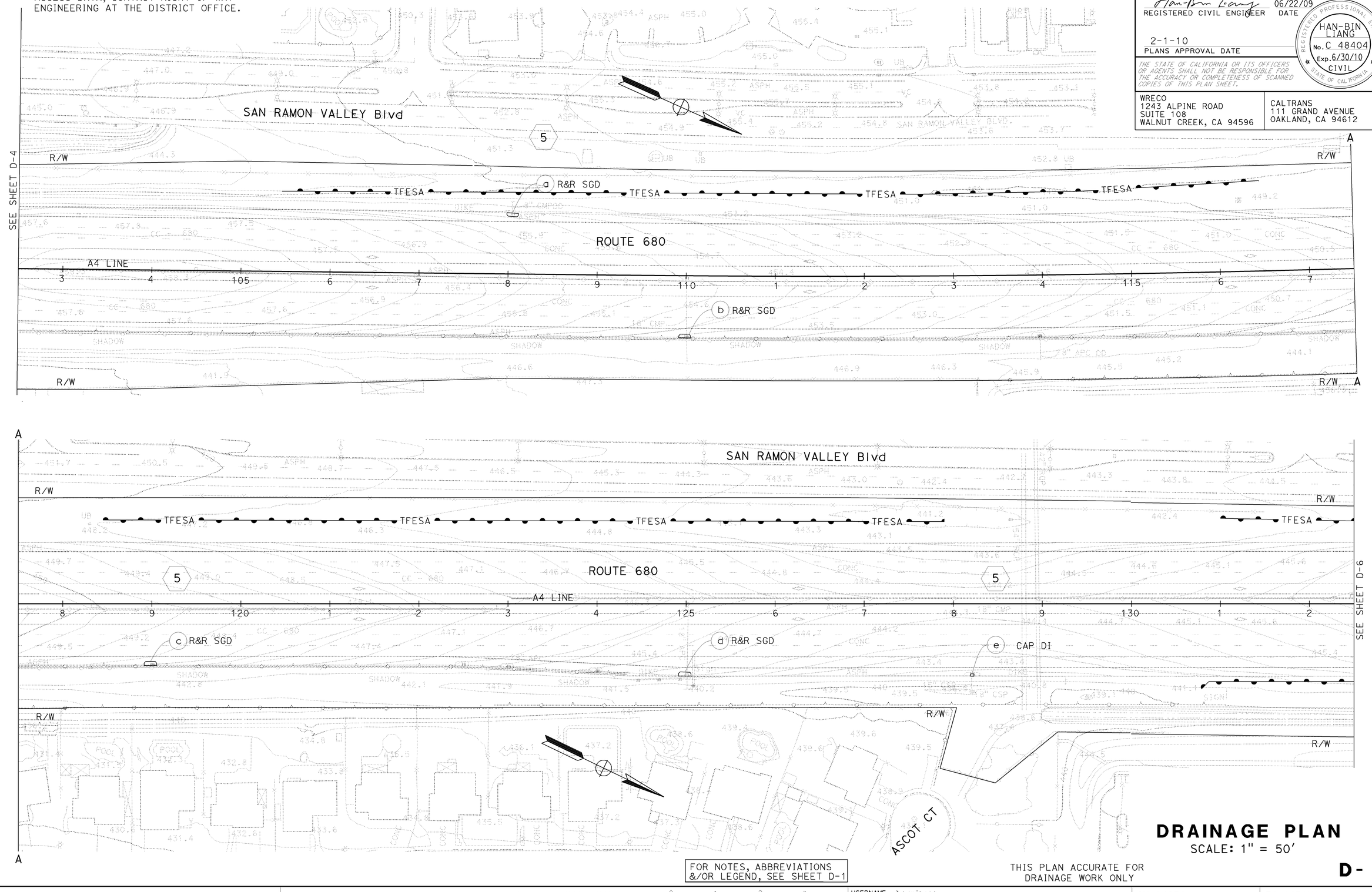

FOR NOTES, ABBREVIATIONS &/OR LEGEND, SEE SHEET D-1

THIS PLAN ACCURATE FOR DRAINAGE WORK ONLY

DRAINAGE PLAN

SCALE: 1" = 50'

D- 5

REVISED BY	DATE REVISED
RP	7/31/09

CALCULATED-DESIGNED BY: RAJA PERIKETI
CHECKED BY: CHRIS SEWELL
CONSULTANT FUNCTIONAL SUPERVISOR: HAN-BIN LIANG
STATE OF CALIFORNIA - DEPARTMENT OF TRANSPORTATION
Caltrans

LAST REVISION DATE PLOTTED => 04-FEB-2010
TIME PLOTTED => 08:58
07-31-09

BORDER LAST REVISED 4/11/2008

RELATIVE BORDER SCALE IS IN INCHES 0 1 2 3

USERNAME => trmikesl
DGN FILE => 4447Ouia005.dgn

CU 04236

EA 4470U1

Dist	COUNTY	ROUTE	POST MILES TOTAL PROJECT	SHEET No.	TOTAL SHEETS
04	CC	680	0.0/R12.8	108	504

Han-Bin Liang 06/22/09
REGISTERED CIVIL ENGINEER DATE

2-1-10
PLANS APPROVAL DATE

REGISTERED PROFESSIONAL ENGINEER
HAN-BIN LIANG
No. C 48404
Exp. 6/30/10
CIVIL
STATE OF CALIFORNIA

THE STATE OF CALIFORNIA OR ITS OFFICERS OR AGENTS SHALL NOT BE RESPONSIBLE FOR THE ACCURACY OR COMPLETENESS OF SCANNED COPIES OF THIS PLAN SHEET.

WRECO
1243 ALPINE ROAD
SUITE 108
WALNUT CREEK, CA 94596

CALTRANS
111 GRAND AVENUE
OAKLAND, CA 94612

· FOR ACCURATE RIGHT OF WAY AND ACCESS DATA, CONTACT RIGHT OF WAY ENGINEERING AT THE DISTRICT OFFICE.

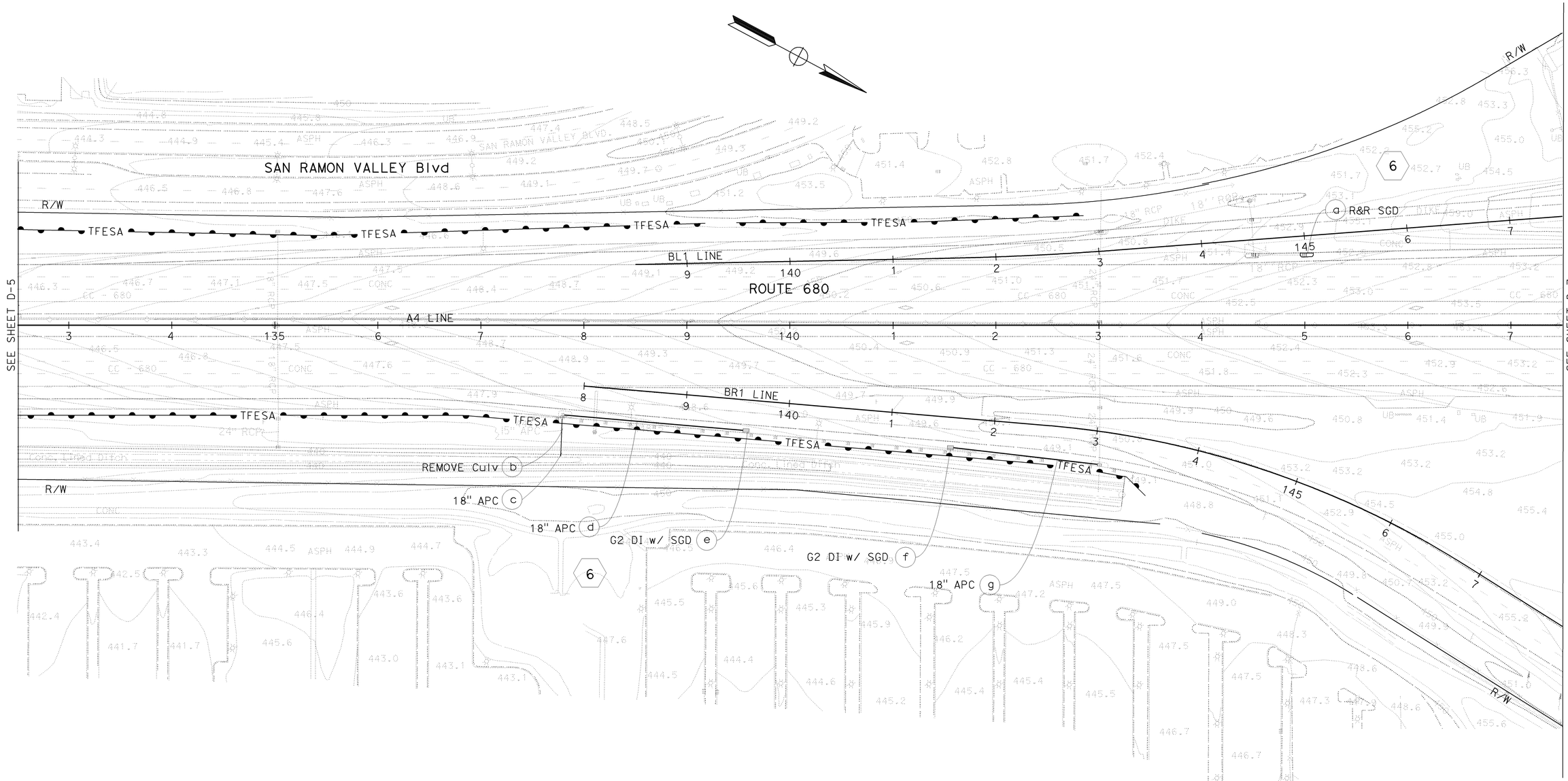

DRAINAGE PLAN

SCALE: 1" = 50'

FOR NOTES, ABBREVIATIONS &/OR LEGEND, SEE SHEET D-1

THIS PLAN ACCURATE FOR DRAINAGE WORK ONLY

D- 6

REVISED BY	DATE REVISED
RP	7/31/09

CALCULATED-DESIGNED BY: RAJA PERIKETI
CHECKED BY: CHRIS SEWELL
CONSULTANT FUNCTIONAL SUPERVISOR: HAN-BIN LIANG
STATE OF CALIFORNIA - DEPARTMENT OF TRANSPORTATION
Caltrans

LAST REVISION | DATE PLOTTED => 04-FEB-2010
07-31-09 | TIME PLOTTED => 08:58

BORDER LAST REVISED 4/11/2008

RELATIVE BORDER SCALE IS IN INCHES 0 1 2 3

USERNAME => trmikesl
DGN FILE => 4470uia006.dgn

CU 04236

EA 4470U1

Dist	COUNTY	ROUTE	POST MILES TOTAL PROJECT	SHEET No.	TOTAL SHEETS
04	CC	680	0.0/R12.8	109	504

Han-Bin Liang 06/22/09
REGISTERED CIVIL ENGINEER DATE

2-1-10
PLANS APPROVAL DATE

REGISTERED PROFESSIONAL ENGINEER
HAN-BIN LIANG
No. C 48404
Exp. 6/30/10
CIVIL
STATE OF CALIFORNIA

THE STATE OF CALIFORNIA OR ITS OFFICERS OR AGENTS SHALL NOT BE RESPONSIBLE FOR THE ACCURACY OR COMPLETENESS OF SCANNED COPIES OF THIS PLAN SHEET.

WRECO
1243 ALPINE ROAD
SUITE 108
WALNUT CREEK, CA 94596

CALTRANS
111 GRAND AVENUE
OAKLAND, CA 94612

· FOR ACCURATE RIGHT OF WAY AND ACCESS DATA, CONTACT RIGHT OF WAY ENGINEERING AT THE DISTRICT OFFICE.

SEE SHEET D-6

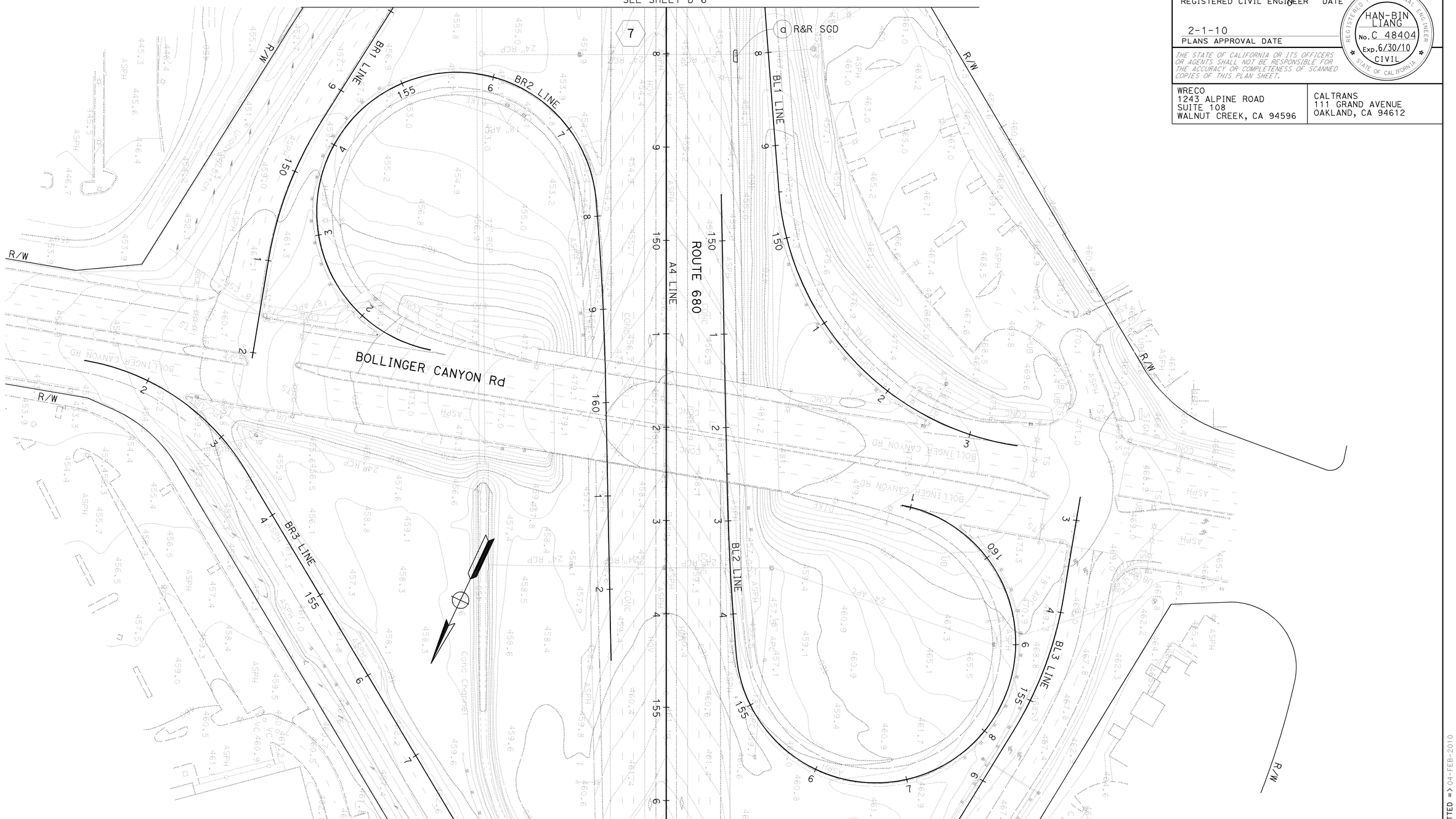

SEE SHEET D-8

DRAINAGE PLAN

SCALE: 1" = 50'

D- 7

FOR NOTES, ABBREVIATIONS &/OR LEGEND, SEE SHEET D-1

THIS PLAN ACCURATE FOR DRAINAGE WORK ONLY

STATE OF CALIFORNIA - DEPARTMENT OF TRANSPORTATION
Caltrans

CONSULTANT FUNCTIONAL SUPERVISOR: HAN-BIN LIANG

CALCULATED-DESIGNED BY: RAJA PERIKETI
CHECKED BY: CHRIS SEWELL

REVISED BY: RP
DATE REVISED: 7/31/09

LAST REVISION DATE PLOTTED => 04-FEB-2010
TIME PLOTTED => 08:58
07-31-09

BORDER LAST REVISED 4/11/2008

RELATIVE BORDER SCALE IS IN INCHES 0 1 2 3

USERNAME => trmikesl
DGN FILE => 44470uia007.dgn

CU 04236

EA 4470U1

Dist	COUNTY	ROUTE	POST MILES TOTAL PROJECT	SHEET No.	TOTAL SHEETS
04	CC	680	0.0/R12.8	110	504

Han-Bin Liang 06/22/09
REGISTERED CIVIL ENGINEER DATE

REGISTERED PROFESSIONAL ENGINEER
HAN-BIN LIANG
No. C 48404
Exp. 6/30/10
CIVIL
STATE OF CALIFORNIA

2-1-10
PLANS APPROVAL DATE

THE STATE OF CALIFORNIA OR ITS OFFICERS OR AGENTS SHALL NOT BE RESPONSIBLE FOR THE ACCURACY OR COMPLETENESS OF SCANNED COPIES OF THIS PLAN SHEET.

WRECO
1243 ALPINE ROAD
SUITE 108
WALNUT CREEK, CA 94596

CALTRANS
111 GRAND AVENUE
OAKLAND, CA 94612

· FOR ACCURATE RIGHT OF WAY AND ACCESS DATA, CONTACT RIGHT OF WAY ENGINEERING AT THE DISTRICT OFFICE.

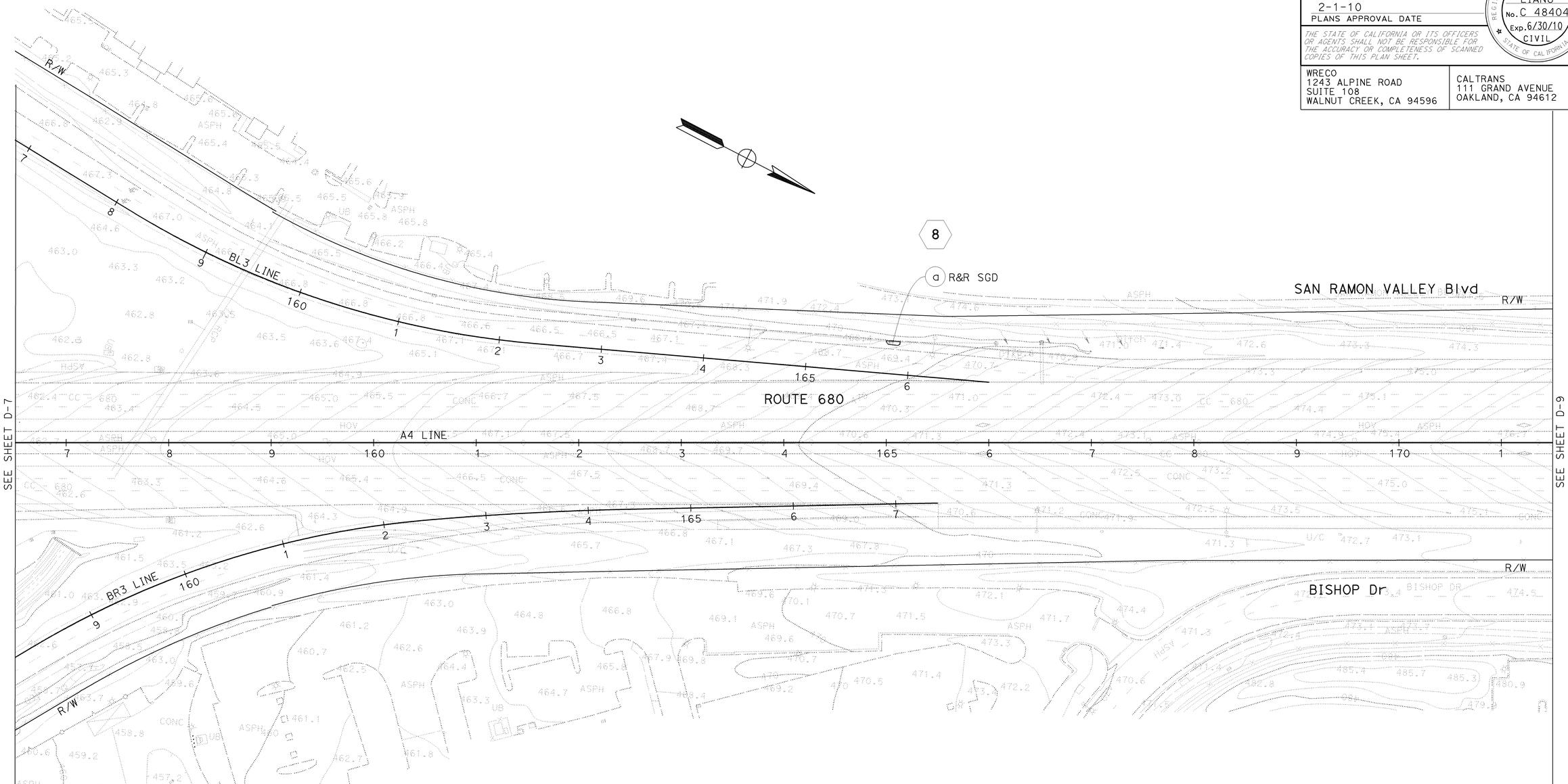

DRAINAGE PLAN
SCALE: 1" = 50'

D- 8

FOR NOTES, ABBREVIATIONS &/OR LEGEND, SEE SHEET D-1

THIS PLAN ACCURATE FOR DRAINAGE WORK ONLY

STATE OF CALIFORNIA - DEPARTMENT OF TRANSPORTATION
Caltrans

CONSULTANT FUNCTIONAL SUPERVISOR: HAN-BIN LIANG

REVISED BY	DATE REVISED
RP	7/31/09

CALCULATED-DESIGNED BY: RAJA PERIKETI
CHECKED BY: CHRIS SEWELL

LAST REVISION | DATE PLOTTED => 04-FEB-2010
07-31-09 | TIME PLOTTED => 08:59

BORDER LAST REVISED 4/11/2008

RELATIVE BORDER SCALE IS IN INCHES 0 1 2 3

USERNAME => trmikesl
DGN FILE => 44470uia008.dgn

CU 04236

EA 4470U1

Dist	COUNTY	ROUTE	POST MILES TOTAL PROJECT	SHEET No.	TOTAL SHEETS
04	CC	680	0.0/R12.8	111	504

Han-Bin Liang 06/22/09
REGISTERED CIVIL ENGINEER DATE

REGISTERED PROFESSIONAL ENGINEER
HAN-BIN LIANG
No. C 48404
Exp. 6/30/10
CIVIL
STATE OF CALIFORNIA

2-1-10
PLANS APPROVAL DATE

THE STATE OF CALIFORNIA OR ITS OFFICERS OR AGENTS SHALL NOT BE RESPONSIBLE FOR THE ACCURACY OR COMPLETENESS OF SCANNED COPIES OF THIS PLAN SHEET.

WRECO
1243 ALPINE ROAD
SUITE 108
WALNUT CREEK, CA 94596

CALTRANS
111 GRAND AVENUE
OAKLAND, CA 94612

· FOR ACCURATE RIGHT OF WAY AND ACCESS DATA, CONTACT RIGHT OF WAY ENGINEERING AT THE DISTRICT OFFICE.

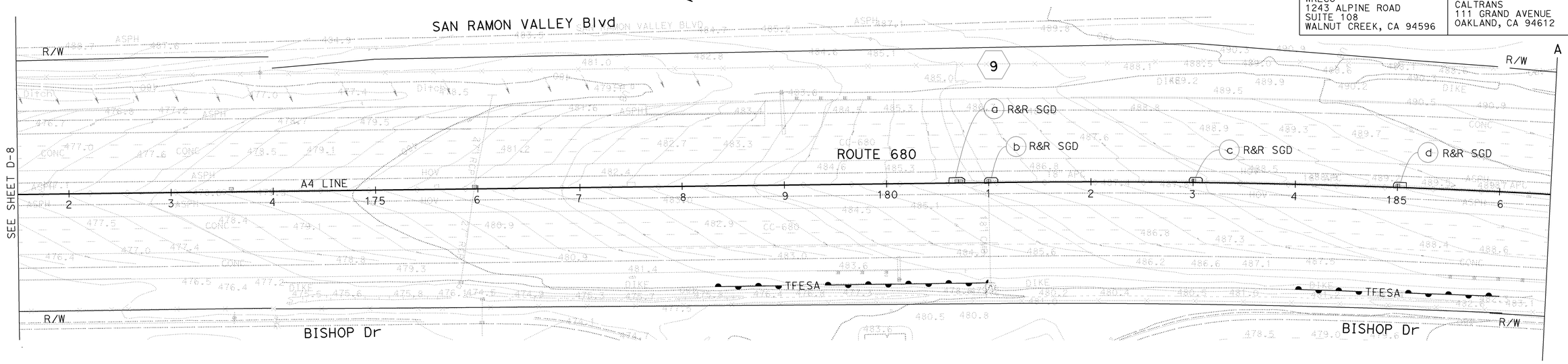

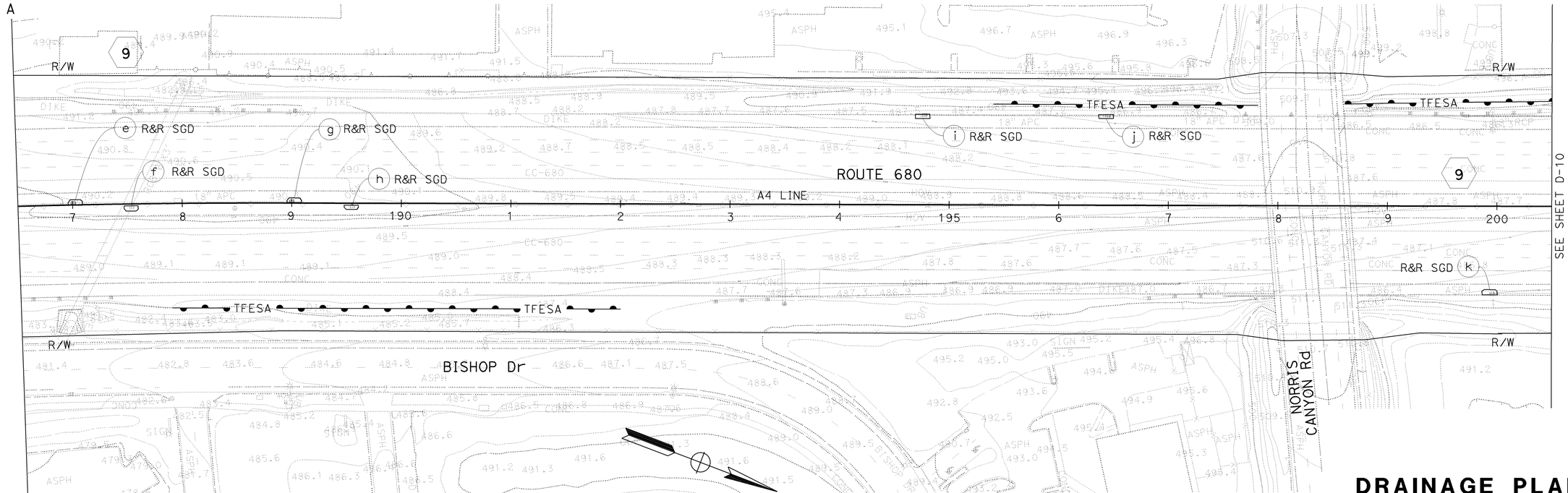

DRAINAGE PLAN

SCALE: 1" = 50'

FOR NOTES, ABBREVIATIONS &/OR LEGEND, SEE SHEET D-1

THIS PLAN ACCURATE FOR DRAINAGE WORK ONLY

D- 9

STATE OF CALIFORNIA - DEPARTMENT OF TRANSPORTATION
Caltrans

CONSULTANT FUNCTIONAL SUPERVISOR: HAN-BIN LIANG

REVISED BY	DATE REVISED
RP	7/31/09

CALCULATED-DESIGNED BY: RAJA PERIKETI
CHECKED BY: CHRIS SEWELL

LAST REVISION | DATE PLOTTED => 04-FEB-2010
07-31-09 | TIME PLOTTED => 08:59

BORDER LAST REVISED 4/11/2008

RELATIVE BORDER SCALE IS IN INCHES 0 1 2 3

USERNAME => trmikesl
DGN FILE => 4447Ouia009.dgn

CU 04236

EA 4470U1

Dist	COUNTY	ROUTE	POST MILES TOTAL PROJECT	SHEET No.	TOTAL SHEETS
04	CC	680	0.0/R12.8	112	504

REGISTERED CIVIL ENGINEER 06/22/09 DATE

2-1-10
PLANS APPROVAL DATE

REGISTERED PROFESSIONAL ENGINEER HAN-BIN LIANG No. C 48404 Exp. 6/30/10 CIVIL STATE OF CALIFORNIA

THE STATE OF CALIFORNIA OR ITS OFFICERS OR AGENTS SHALL NOT BE RESPONSIBLE FOR THE ACCURACY OR COMPLETENESS OF SCANNED COPIES OF THIS PLAN SHEET.

WRECO
1243 ALPINE ROAD
SUITE 108
WALNUT CREEK, CA 94596

CALTRANS
111 GRAND AVENUE
OAKLAND, CA 94612

· FOR ACCURATE RIGHT OF WAY AND ACCESS DATA, CONTACT RIGHT OF WAY ENGINEERING AT THE DISTRICT OFFICE.

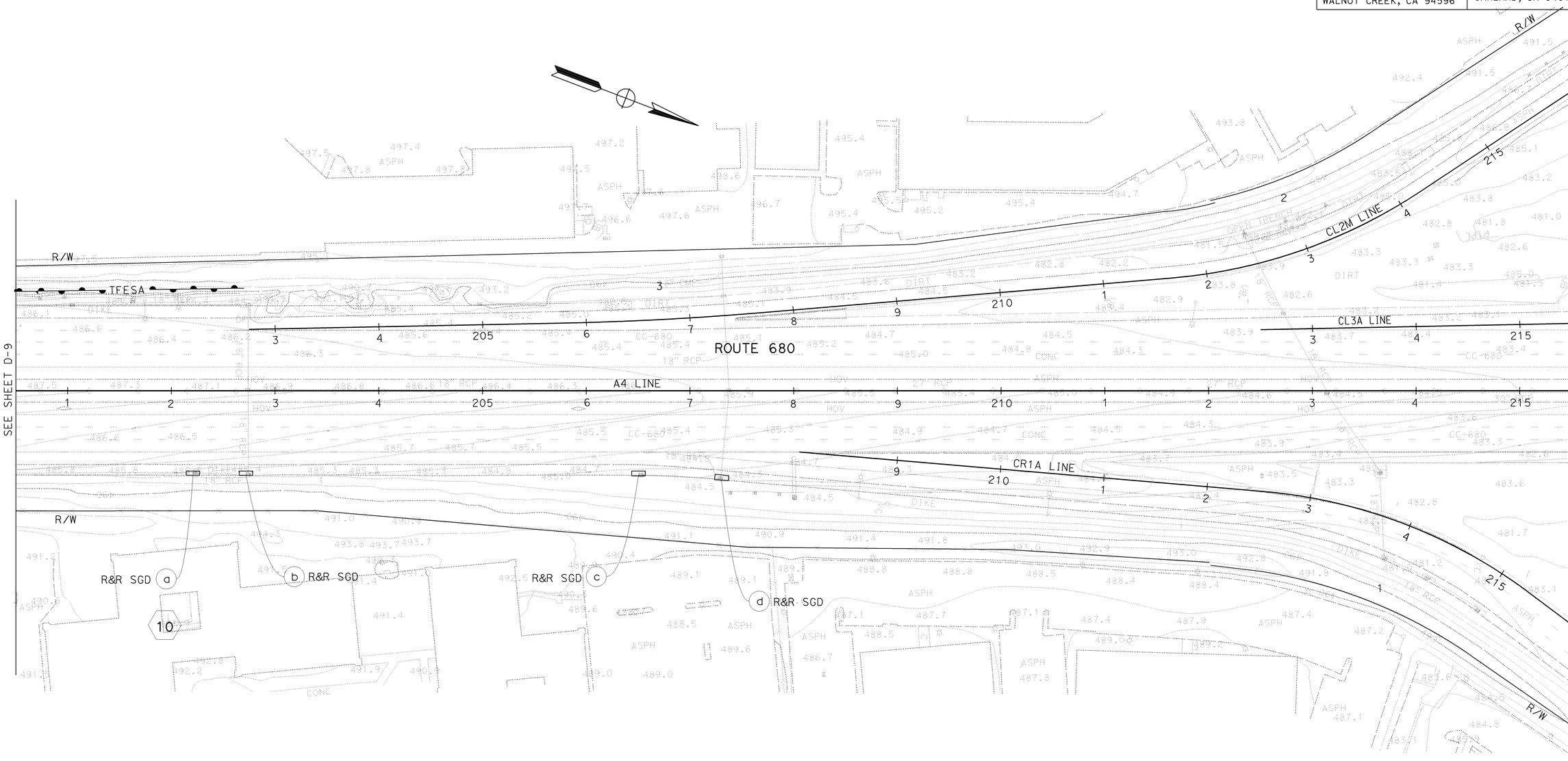

DRAINAGE PLAN

SCALE: 1" = 50'

FOR NOTES, ABBREVIATIONS &/OR LEGEND, SEE SHEET D-1

THIS PLAN ACCURATE FOR DRAINAGE WORK ONLY

D-10

STATE OF CALIFORNIA - DEPARTMENT OF TRANSPORTATION
Caltrans

CONSULTANT FUNCTIONAL SUPERVISOR: HAN-BIN LIANG
CALCULATED-DESIGNED BY: RAJA PERIKETI
CHECKED BY: CHRIS SEWELL
REVISED BY: RP
DATE REVISED: 7/31/09

LAST REVISION 07-31-09
DATE PLOTTED => 04-FEB-2010
TIME PLOTTED => 08:59

Dist	COUNTY	ROUTE	POST MILES TOTAL PROJECT	SHEET No.	TOTAL SHEETS
04	CC	680	0.0/R12.8	113	504

Han-Bin Liang 06/22/09
REGISTERED CIVIL ENGINEER DATE

HAN-BIN LIANG No. C 48404 Exp.6/30/10 CIVIL — REGISTERED PROFESSIONAL ENGINEER — STATE OF CALIFORNIA

2-1-10
PLANS APPROVAL DATE

THE STATE OF CALIFORNIA OR ITS OFFICERS OR AGENTS SHALL NOT BE RESPONSIBLE FOR THE ACCURACY OR COMPLETENESS OF SCANNED COPIES OF THIS PLAN SHEET.

WRECO
1243 ALPINE ROAD
SUITE 108
WALNUT CREEK, CA 94596

CALTRANS
111 GRAND AVENUE
OAKLAND, CA 94612

- FOR ACCURATE RIGHT OF WAY AND ACCESS DATA, CONTACT RIGHT OF WAY ENGINEERING AT THE DISTRICT OFFICE.

NO DRAINAGE WORK ON THIS SHEET

DRAINAGE PLAN

SCALE: 1" = 50'

D-11

FOR NOTES, ABBREVIATIONS &/OR LEGEND, SEE SHEET D-1

THIS PLAN ACCURATE FOR DRAINAGE WORK ONLY

STATE OF CALIFORNIA - DEPARTMENT OF TRANSPORTATION
Caltrans

CONSULTANT FUNCTIONAL SUPERVISOR: HAN-BIN LIANG

CALCULATED-DESIGNED BY: RAJA PERIKETI
CHECKED BY: CHRIS SEWELL

REVISED BY: RP
DATE REVISED: 7/31/09

LAST REVISION DATE PLOTTED => 04-FEB-2010
TIME PLOTTED => 08:59
07-31-09

BORDER LAST REVISED 4/11/2008

RELATIVE BORDER SCALE IS IN INCHES 0 1 2 3

USERNAME => trmikesl
DGN FILE => 4447Ouia011.dgn

CU 04236

EA 4470U1

Dist	COUNTY	ROUTE	POST MILES TOTAL PROJECT	SHEET No.	TOTAL SHEETS
04	CC	680	0.0/R12.8	114	504

Han-Bin Liang 06/22/09
REGISTERED CIVIL ENGINEER DATE

REGISTERED PROFESSIONAL ENGINEER
HAN-BIN LIANG
No. C 48404
Exp. 6/30/10
CIVIL
STATE OF CALIFORNIA

2-1-10
PLANS APPROVAL DATE

THE STATE OF CALIFORNIA OR ITS OFFICERS OR AGENTS SHALL NOT BE RESPONSIBLE FOR THE ACCURACY OR COMPLETENESS OF SCANNED COPIES OF THIS PLAN SHEET.

WRECO
1243 ALPINE ROAD
SUITE 108
WALNUT CREEK, CA 94596

CALTRANS
111 GRAND AVENUE
OAKLAND, CA 94612

· FOR ACCURATE RIGHT OF WAY AND ACCESS DATA, CONTACT RIGHT OF WAY ENGINEERING AT THE DISTRICT OFFICE.

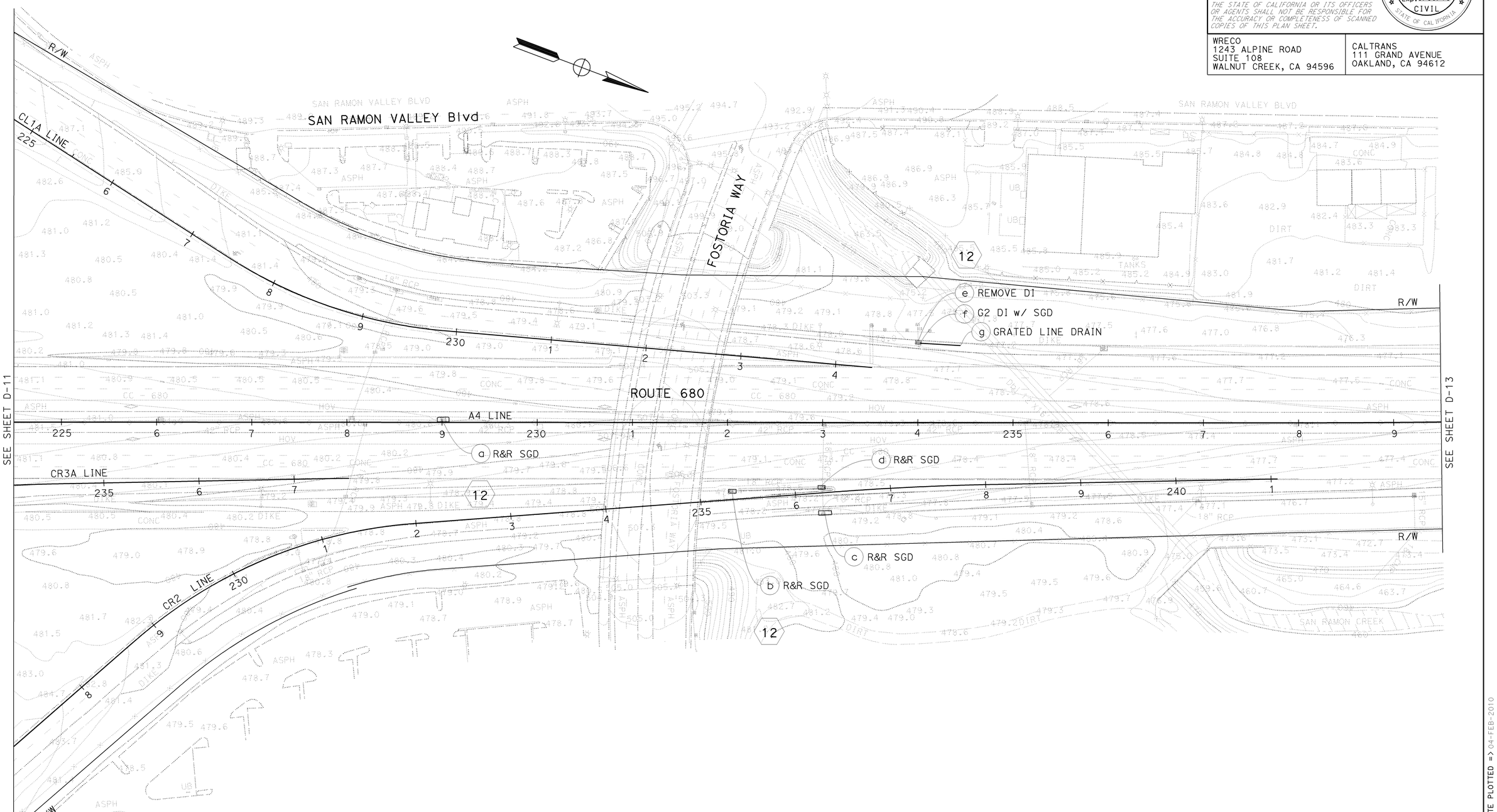

DRAINAGE PLAN

SCALE: 1" = 50'

D-12

FOR NOTES, ABBREVIATIONS &/OR LEGEND, SEE SHEET D-1

THIS PLAN ACCURATE FOR DRAINAGE WORK ONLY

REVISED BY: RP | DATE REVISED: 7/31/09
CALCULATED-DESIGNED BY: RAJA PERIKETI
CHECKED BY: CHRIS SEWELL
CONSULTANT FUNCTIONAL SUPERVISOR: HAN-BIN LIANG
STATE OF CALIFORNIA - DEPARTMENT OF TRANSPORTATION
Caltrans

LAST REVISION DATE PLOTTED => 04-FEB-2010
TIME PLOTTED => 08:59
07-31-09

BORDER LAST REVISED 4/11/2008

RELATIVE BORDER SCALE IS IN INCHES 0 1 2 3

USERNAME => trmikesl
DGN FILE => 4447Ouia012.dgn

CU 04236

EA 4470U1

Dist	COUNTY	ROUTE	POST MILES TOTAL PROJECT	SHEET No.	TOTAL SHEETS
04	CC	680	0.0/R12.8	115	504

Han-Bin Liang 06/22/09
REGISTERED CIVIL ENGINEER DATE

2-1-10
PLANS APPROVAL DATE

REGISTERED PROFESSIONAL ENGINEER
HAN-BIN LIANG
No. C 48404
Exp. 6/30/10
CIVIL
STATE OF CALIFORNIA

THE STATE OF CALIFORNIA OR ITS OFFICERS OR AGENTS SHALL NOT BE RESPONSIBLE FOR THE ACCURACY OR COMPLETENESS OF SCANNED COPIES OF THIS PLAN SHEET.

WRECO
1243 ALPINE ROAD
SUITE 108
WALNUT CREEK, CA 94596

CALTRANS
111 GRAND AVENUE
OAKLAND, CA 94612

· FOR ACCURATE RIGHT OF WAY AND ACCESS DATA, CONTACT RIGHT OF WAY ENGINEERING AT THE DISTRICT OFFICE.

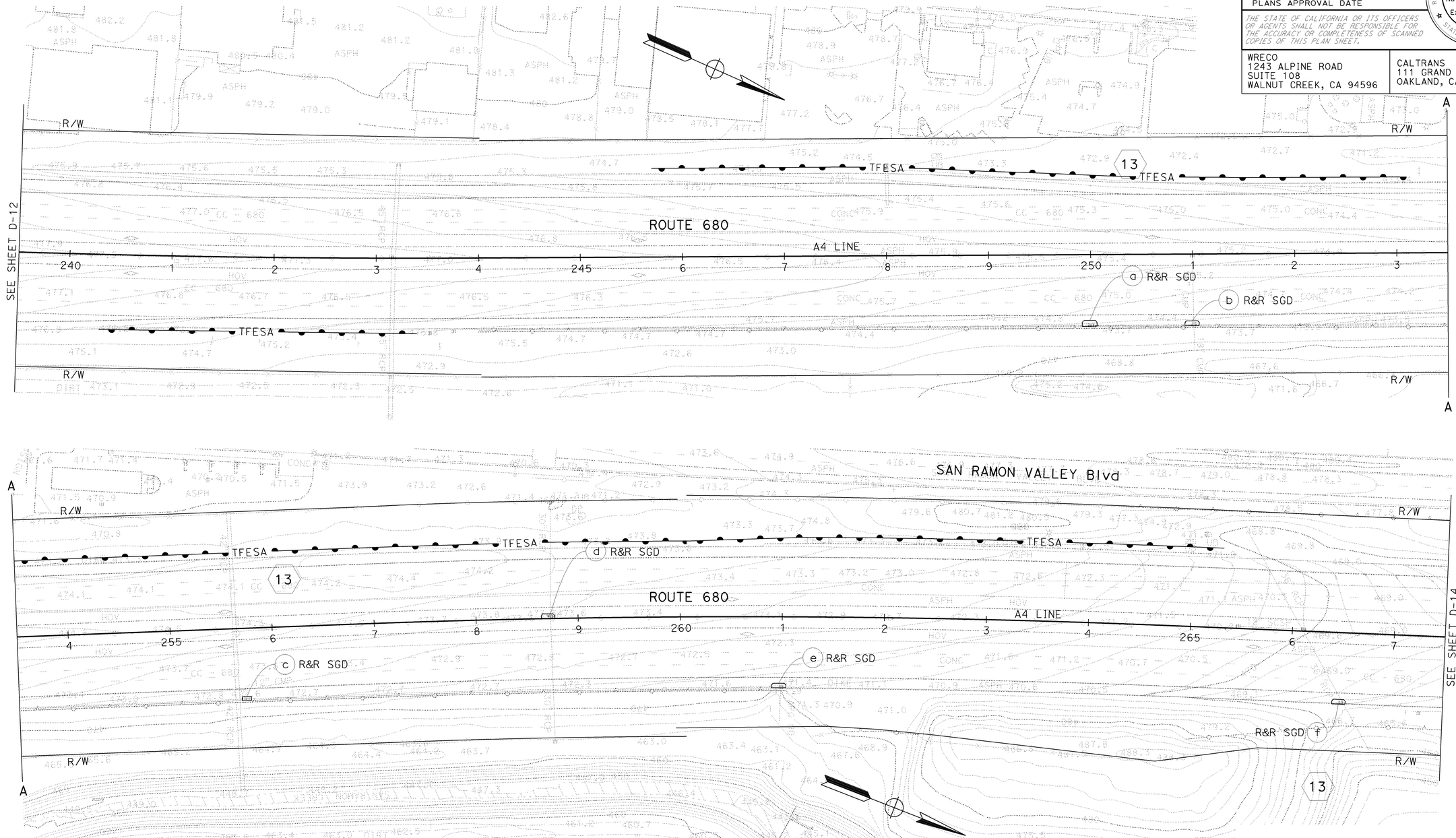

FOR NOTES, ABBREVIATIONS &/OR LEGEND, SEE SHEET D-1

THIS PLAN ACCURATE FOR DRAINAGE WORK ONLY

DRAINAGE PLAN

SCALE: 1" = 50'

D-13

LAST REVISION | DATE PLOTTED => 04-FEB-2010
07-31-09 | TIME PLOTTED => 08:59

STATE OF CALIFORNIA - DEPARTMENT OF TRANSPORTATION
Caltrans

CONSULTANT FUNCTIONAL SUPERVISOR: HAN-BIN LIANG

DESIGNED BY	CALCULATED-	CHECKED BY	DRAWN BY	REVISED BY	DATE REVISED
RAJA PERIKETI		CHRIS SEWELL		RP	7/31/09

BORDER LAST REVISED 4/11/2008

RELATIVE BORDER SCALE IS IN INCHES 0 1 2 3

USERNAME => trmikesl
DGN FILE => 4447Ouia013.dgn

CU 04236

EA 4470U1

Dist	COUNTY	ROUTE	POST MILES TOTAL PROJECT	SHEET No.	TOTAL SHEETS
04	CC	680	0.0/R12.8	116	504

Han-Bin Liang 06/22/09
REGISTERED CIVIL ENGINEER DATE

REGISTERED PROFESSIONAL ENGINEER
HAN-BIN LIANG
No. C 48404
Exp. 6/30/10
CIVIL
STATE OF CALIFORNIA

2-1-10
PLANS APPROVAL DATE

THE STATE OF CALIFORNIA OR ITS OFFICERS OR AGENTS SHALL NOT BE RESPONSIBLE FOR THE ACCURACY OR COMPLETENESS OF SCANNED COPIES OF THIS PLAN SHEET.

WRECO
1243 ALPINE ROAD
SUITE 108
WALNUT CREEK, CA 94596

CALTRANS
111 GRAND AVENUE
OAKLAND, CA 94612

- FOR ACCURATE RIGHT OF WAY AND ACCESS DATA, CONTACT RIGHT OF WAY ENGINEERING AT THE DISTRICT OFFICE.

SAN RAMON VALLEY Blvd
ROUTE 680
A4 LINE
R/W
GREENBROOK Dr
SEE SHEET D-13
SEE SHEET D-15
CAMINO RAMON
BALDWIN DR
ST PATRICKS Dr
14
a R&R SGD
b R&R SGD
c R&R SGD
d R&R SGD
e R&R SGD
f R&R SGD
g R&R SGD
h R&R SGD
i R&R SGD
j R&R SGD
k R&R SGD
l R&R SGD
m R&R SGD
n R&R SGD
o R&R SGD
p R&R SGD
q R&R SGD

FOR NOTES, ABBREVIATIONS &/OR LEGEND, SEE SHEET D-1

THIS PLAN ACCURATE FOR DRAINAGE WORK ONLY

DRAINAGE PLAN
SCALE: 1" = 50'

D-14

STATE OF CALIFORNIA - DEPARTMENT OF TRANSPORTATION
Caltrans
CONSULTANT FUNCTIONAL SUPERVISOR: HAN-BIN LIANG
CALCULATED-DESIGNED BY: RAJA PERIKETI
CHECKED BY: CHRIS SEWELL
REVISED BY: RP
DATE REVISED: 7/31/09

LAST REVISION DATE PLOTTED => 04-FEB-2010
TIME PLOTTED => 08:59
07-31-09

BORDER LAST REVISED 4/11/2008
RELATIVE BORDER SCALE IS IN INCHES 0 1 2 3
USERNAME => trmikesl
DGN FILE => 4447Ouia014.dgn
CU 04236
EA 4470U1

Dist	COUNTY	ROUTE	POST MILES TOTAL PROJECT	SHEET No.	TOTAL SHEETS
04	CC	680	0.0/R12.8	117	504

Han-Bin Liang 06/22/09
REGISTERED CIVIL ENGINEER DATE

HAN-BIN LIANG No. C 48404 Exp. 6/30/10 CIVIL — REGISTERED PROFESSIONAL ENGINEER — STATE OF CALIFORNIA

2-1-10
PLANS APPROVAL DATE

THE STATE OF CALIFORNIA OR ITS OFFICERS OR AGENTS SHALL NOT BE RESPONSIBLE FOR THE ACCURACY OR COMPLETENESS OF SCANNED COPIES OF THIS PLAN SHEET.

WRECO
1243 ALPINE ROAD
SUITE 108
WALNUT CREEK, CA 94596

CALTRANS
111 GRAND AVENUE
OAKLAND, CA 94612

- FOR ACCURATE RIGHT OF WAY AND ACCESS DATA, CONTACT RIGHT OF WAY ENGINEERING AT THE DISTRICT OFFICE.

FOR NOTES, ABBREVIATIONS &/OR LEGEND, SEE SHEET D-1

THIS PLAN ACCURATE FOR DRAINAGE WORK ONLY

DRAINAGE PLAN

SCALE: 1" = 50'

D-15

STATE OF CALIFORNIA - DEPARTMENT OF TRANSPORTATION
Caltrans

CONSULTANT FUNCTIONAL SUPERVISOR: HAN-BIN LIANG

CALCULATED-DESIGNED BY	CHECKED BY	REVISED BY	DATE REVISED
RAJA PERIKETI	CHRIS SEWELL	RP	7/31/09

LAST REVISION DATE PLOTTED => 04-FEB-2010
TIME PLOTTED => 08:59
07-31-09

BORDER LAST REVISED 4/11/2008

RELATIVE BORDER SCALE IS IN INCHES 0 1 2 3

USERNAME => trmikesl
DGN FILE => 4447Ouia015.dgn

CU 04236

EA 4470U1

- FOR ACCURATE RIGHT OF WAY AND ACCESS DATA, CONTACT RIGHT OF WAY ENGINEERING AT THE DISTRICT OFFICE.

Dist	COUNTY	ROUTE	POST MILES TOTAL PROJECT	SHEET No.	TOTAL SHEETS
04	CC	680	0.0/R12.8	118	504

Han-Bin Liang 06/22/09
REGISTERED CIVIL ENGINEER DATE

2-1-10
PLANS APPROVAL DATE

REGISTERED PROFESSIONAL ENGINEER
HAN-BIN LIANG
No. C 48404
Exp. 6/30/10
CIVIL
STATE OF CALIFORNIA

THE STATE OF CALIFORNIA OR ITS OFFICERS OR AGENTS SHALL NOT BE RESPONSIBLE FOR THE ACCURACY OR COMPLETENESS OF SCANNED COPIES OF THIS PLAN SHEET.

WRECO
1243 ALPINE ROAD
SUITE 108
WALNUT CREEK, CA 94596

CALTRANS
111 GRAND AVENUE
OAKLAND, CA 94612

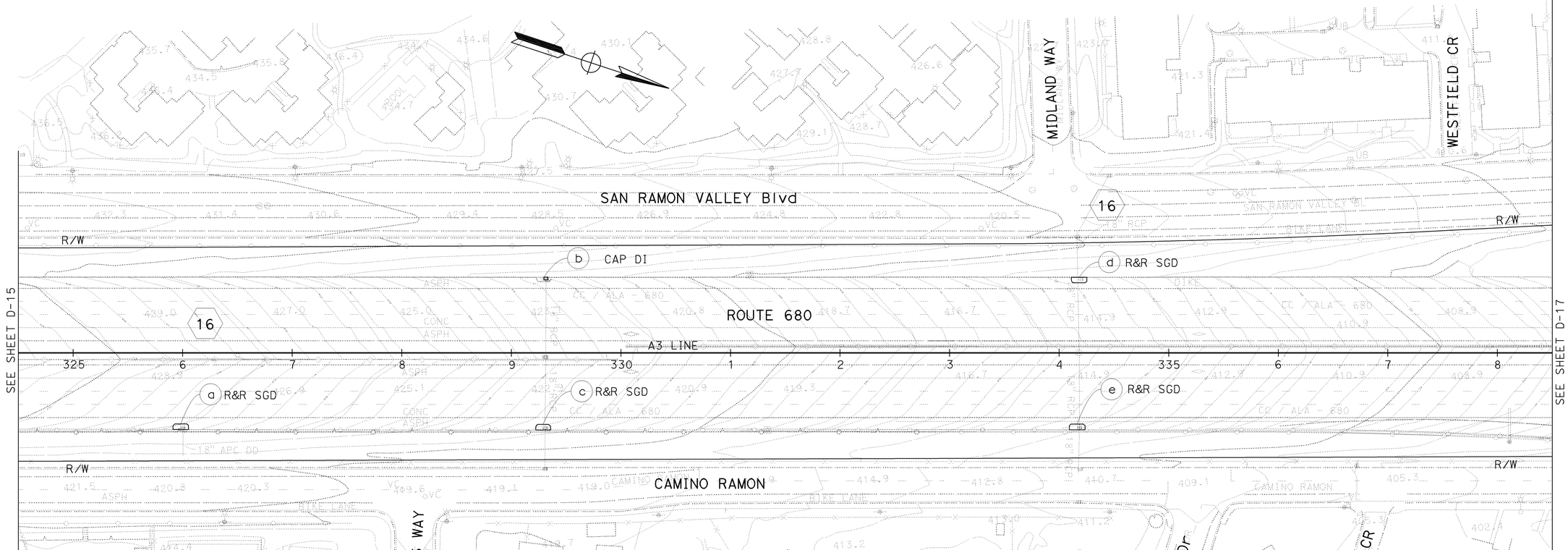

DRAINAGE PLAN
SCALE: 1" = 50'

D-16

FOR NOTES, ABBREVIATIONS &/OR LEGEND, SEE SHEET D-1

THIS PLAN ACCURATE FOR DRAINAGE WORK ONLY

REVISED BY	DATE REVISED
RP	7/31/09

CALCULATED-DESIGNED BY: RAJA PERIKETI
CHECKED BY: CHRIS SEWELL
CONSULTANT FUNCTIONAL SUPERVISOR: HAN-BIN LIANG
STATE OF CALIFORNIA - DEPARTMENT OF TRANSPORTATION
Caltrans

LAST REVISION 07-31-09
DATE PLOTTED => 04-FEB-2010
TIME PLOTTED => 08:59

BORDER LAST REVISED 4/11/2008
RELATIVE BORDER SCALE IS IN INCHES 0 1 2 3
USERNAME => trmikesl
DGN FILE => 44470uia016.dgn
CU 04236
EA 4470U1

- FOR ACCURATE RIGHT OF WAY AND ACCESS DATA, CONTACT RIGHT OF WAY ENGINEERING AT THE DISTRICT OFFICE.

Dist	COUNTY	ROUTE	POST MILES TOTAL PROJECT	SHEET No.	TOTAL SHEETS
04	CC	680	0.0/R12.8	119	504

Han-Bin Liang 06/22/09
REGISTERED CIVIL ENGINEER DATE

REGISTERED PROFESSIONAL ENGINEER
HAN-BIN LIANG
No. C 48404
Exp. 6/30/10
CIVIL
STATE OF CALIFORNIA

2-1-10
PLANS APPROVAL DATE

THE STATE OF CALIFORNIA OR ITS OFFICERS OR AGENTS SHALL NOT BE RESPONSIBLE FOR THE ACCURACY OR COMPLETENESS OF SCANNED COPIES OF THIS PLAN SHEET.

WRECO
1243 ALPINE ROAD
SUITE 108
WALNUT CREEK, CA 94596

CALTRANS
111 GRAND AVENUE
OAKLAND, CA 94612

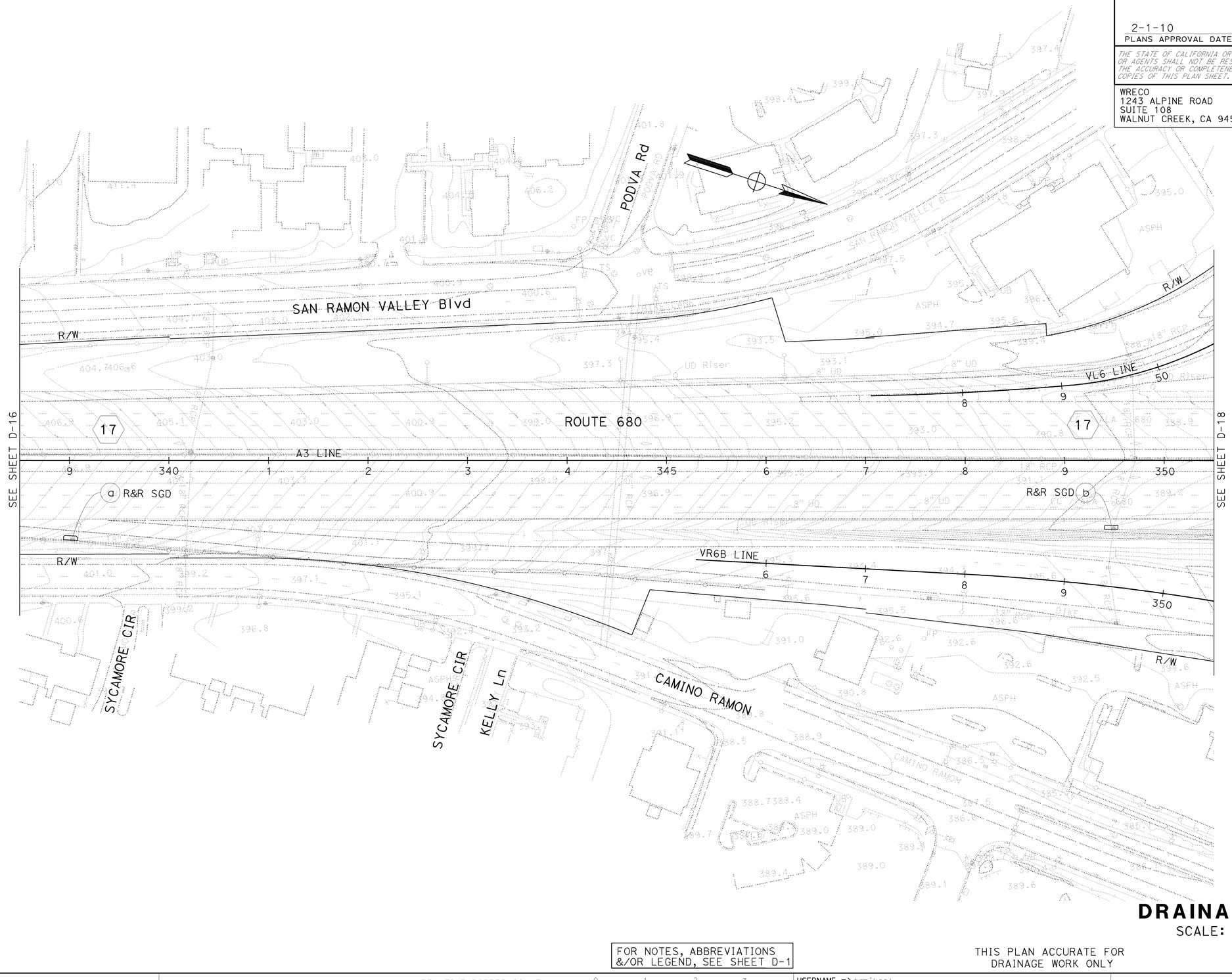

DRAINAGE PLAN

SCALE: 1" = 50'

FOR NOTES, ABBREVIATIONS &/OR LEGEND, SEE SHEET D-1

THIS PLAN ACCURATE FOR DRAINAGE WORK ONLY

D-17

REVISED BY: RP | DATE REVISED: 7/31/09
CALCULATED-DESIGNED BY: RAJA PERIKETI
CHECKED BY: CHRIS SEWELL
CONSULTANT FUNCTIONAL SUPERVISOR: HAN-BIN LIANG
STATE OF CALIFORNIA - DEPARTMENT OF TRANSPORTATION
Caltrans

LAST REVISION | DATE PLOTTED => 04-FEB-2010 | TIME PLOTTED => 08:59 | 07-31-09

- FOR ACCURATE RIGHT OF WAY AND ACCESS DATA, CONTACT RIGHT OF WAY ENGINEERING AT THE DISTRICT OFFICE.

Dist	COUNTY	ROUTE	POST MILES TOTAL PROJECT	SHEET No.	TOTAL SHEETS
04	CC	680	0.0/R12.8	120	504

Han-Bin Liang 06/22/09
REGISTERED CIVIL ENGINEER DATE

2-1-10
PLANS APPROVAL DATE

REGISTERED PROFESSIONAL ENGINEER
HAN-BIN LIANG
No. C 48404
Exp. 6/30/10
CIVIL
STATE OF CALIFORNIA

THE STATE OF CALIFORNIA OR ITS OFFICERS OR AGENTS SHALL NOT BE RESPONSIBLE FOR THE ACCURACY OR COMPLETENESS OF SCANNED COPIES OF THIS PLAN SHEET.

WRECO
1243 ALPINE ROAD
SUITE 108
WALNUT CREEK, CA 94596

CALTRANS
111 GRAND AVENUE
OAKLAND, CA 94612

FOR NOTES, ABBREVIATIONS &/OR LEGEND, SEE SHEET D-1

THIS PLAN ACCURATE FOR DRAINAGE WORK ONLY

DRAINAGE PLAN

SCALE: 1" = 50'

D-18

STATE OF CALIFORNIA - DEPARTMENT OF TRANSPORTATION	CONSULTANT FUNCTIONAL SUPERVISOR	HAN-BIN LIANG	
Caltrans	CALCULATED-DESIGNED BY	RAJA PERIKETI	REVISED BY: RP
	CHECKED BY	CHRIS SEWELL	DATE REVISED: 7/31/09

LAST REVISION DATE PLOTTED => 04-FEB-2010
07-31-09 TIME PLOTTED => 08:59

BORDER LAST REVISED 4/11/2008 | RELATIVE BORDER SCALE IS IN INCHES 0 1 2 3 | USERNAME => trmikesl | DGN FILE => 4470uia018.dgn | CU 04236 | EA 4470U1

Dist	COUNTY	ROUTE	POST MILES TOTAL PROJECT	SHEET No.	TOTAL SHEETS
04	CC	680	0.0/R12.8	121	504

REGISTERED CIVIL ENGINEER — DATE: 06/22/09

HAN-BIN LIANG No. C 48404 Exp. 6/30/10 CIVIL — REGISTERED PROFESSIONAL ENGINEER — STATE OF CALIFORNIA

2-1-10
PLANS APPROVAL DATE

THE STATE OF CALIFORNIA OR ITS OFFICERS OR AGENTS SHALL NOT BE RESPONSIBLE FOR THE ACCURACY OR COMPLETENESS OF SCANNED COPIES OF THIS PLAN SHEET.

WRECO
1243 ALPINE ROAD
SUITE 108
WALNUT CREEK, CA 94596

CALTRANS
111 GRAND AVENUE
OAKLAND, CA 94612

- FOR ACCURATE RIGHT OF WAY AND ACCESS DATA, CONTACT RIGHT OF WAY ENGINEERING AT THE DISTRICT OFFICE.

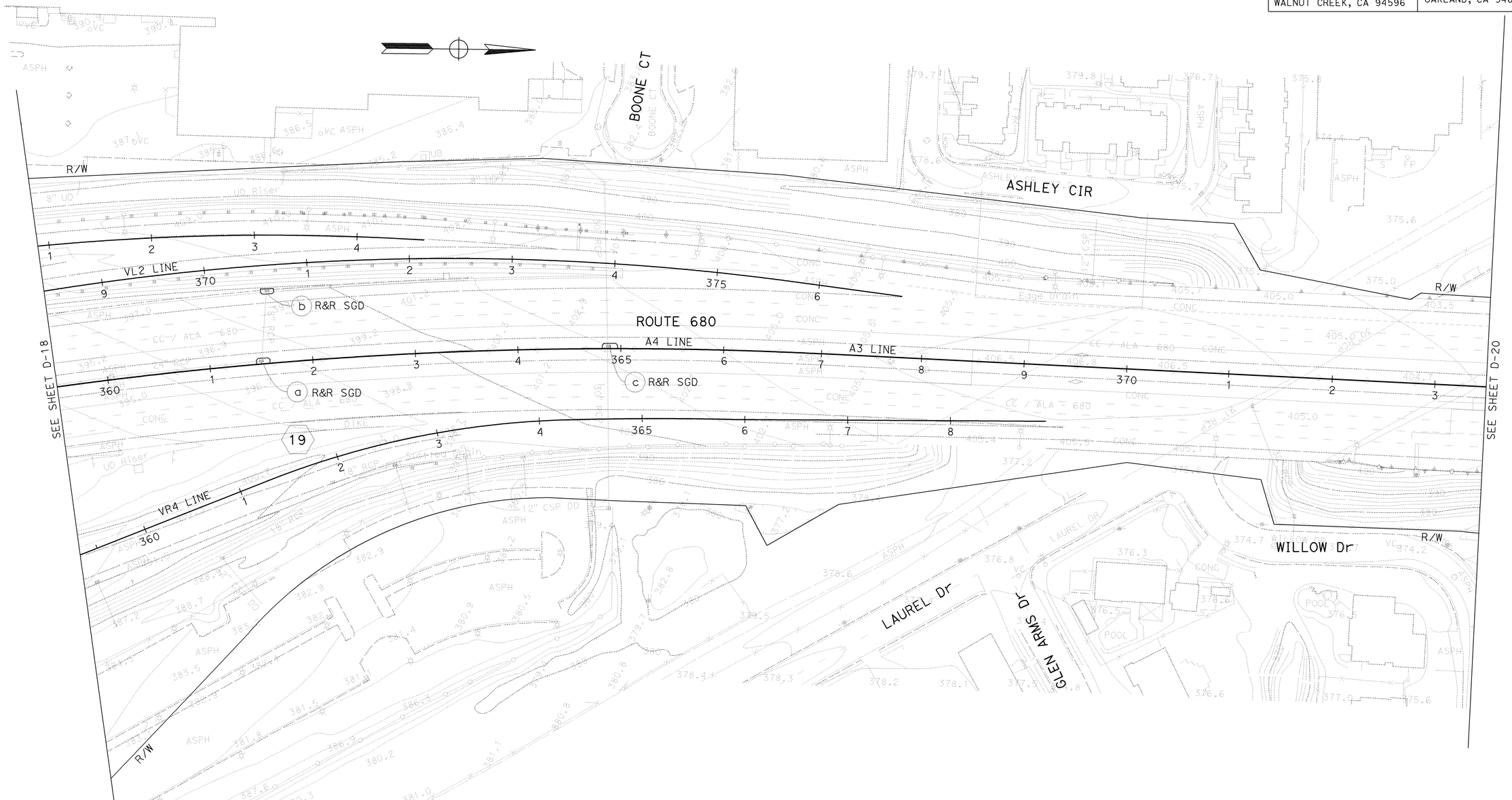

DRAINAGE PLAN

SCALE: 1" = 50'

D-19

FOR NOTES, ABBREVIATIONS &/OR LEGEND, SEE SHEET D-1

THIS PLAN ACCURATE FOR DRAINAGE WORK ONLY

STATE OF CALIFORNIA - DEPARTMENT OF TRANSPORTATION

CONSULTANT FUNCTIONAL SUPERVISOR: HAN-BIN LIANG

CALCULATED-DESIGNED BY: RAJA PERIKETI

CHECKED BY: CHRIS SEWELL

REVISED BY: RP

DATE REVISED: 7/31/09

LAST REVISION DATE PLOTTED => 04-FEB-2010
TIME PLOTTED => 09:00
07-31-09

BORDER LAST REVISED 4/11/2008

RELATIVE BORDER SCALE IS IN INCHES 0 1 2 3

USERNAME => trmikesl
DGN FILE => 44470uia019.dgn

CU 04236

EA 4470U1

Dist	COUNTY	ROUTE	POST MILES TOTAL PROJECT	SHEET No.	TOTAL SHEETS
04	CC	680	0.0/R12.8	122	504

Han-Bin Liang 06/22/09
REGISTERED CIVIL ENGINEER DATE

2-1-10
PLANS APPROVAL DATE

REGISTERED PROFESSIONAL ENGINEER
HAN-BIN LIANG
No. C 48404
Exp. 6/30/10
CIVIL
STATE OF CALIFORNIA

THE STATE OF CALIFORNIA OR ITS OFFICERS OR AGENTS SHALL NOT BE RESPONSIBLE FOR THE ACCURACY OR COMPLETENESS OF SCANNED COPIES OF THIS PLAN SHEET.

WRECO
1243 ALPINE ROAD
SUITE 108
WALNUT CREEK, CA 94596

CALTRANS
111 GRAND AVENUE
OAKLAND, CA 94612

· FOR ACCURATE RIGHT OF WAY AND ACCESS DATA, CONTACT RIGHT OF WAY ENGINEERING AT THE DISTRICT OFFICE.

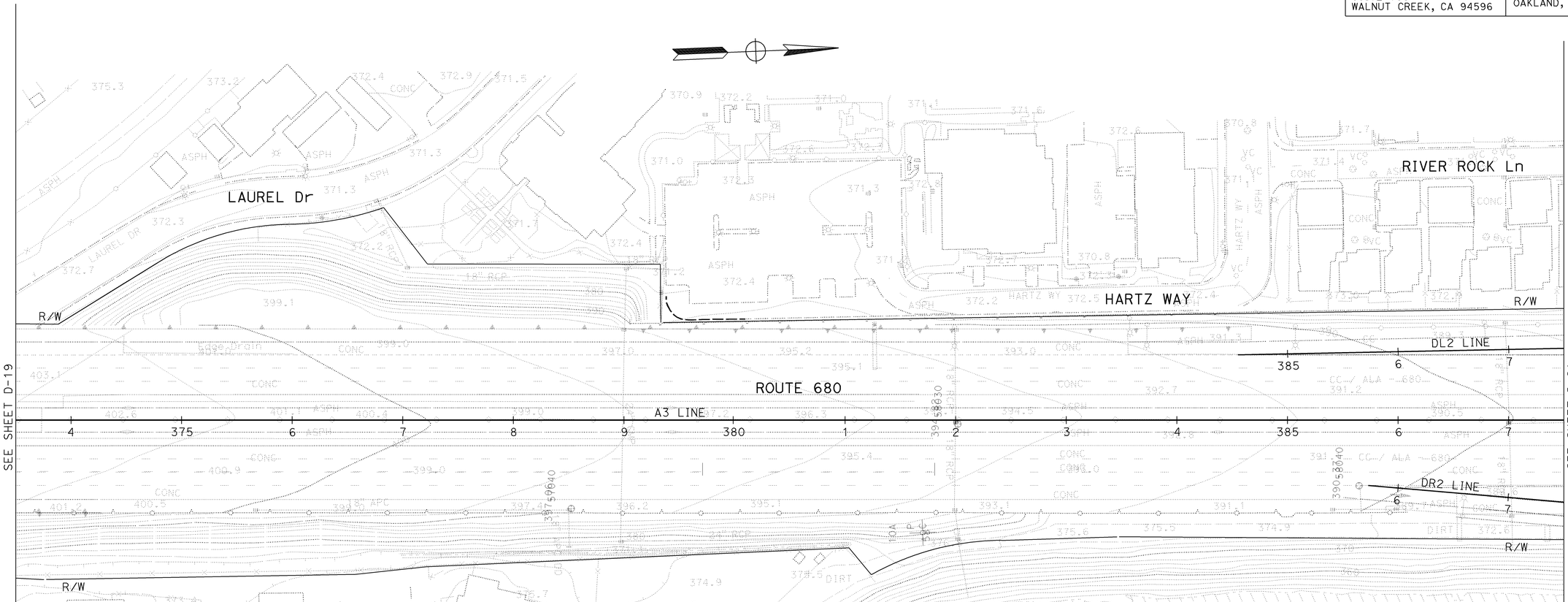

NO DRAINAGE WORK ON THIS SHEET

DRAINAGE PLAN

SCALE: 1" = 50'

D-20

FOR NOTES, ABBREVIATIONS &/OR LEGEND, SEE SHEET D-1

THIS PLAN ACCURATE FOR DRAINAGE WORK ONLY

REVISED BY	DATE REVISED
RP	7/31/09

CALCULATED-DESIGNED BY: RAJA PERIKETI
CHECKED BY: CHRIS SEWELL
CONSULTANT FUNCTIONAL SUPERVISOR: HAN-BIN LIANG
STATE OF CALIFORNIA - DEPARTMENT OF TRANSPORTATION
Caltrans

LAST REVISION: DATE PLOTTED => 04-FEB-2010 TIME PLOTTED => 09:00
07-31-09

BORDER LAST REVISED 4/11/2008

RELATIVE BORDER SCALE IS IN INCHES 0 1 2 3

USERNAME => trmikesl
DGN FILE => 44470uia020.dgn

CU 04236

EA 4470U1

Dist	COUNTY	ROUTE	POST MILES TOTAL PROJECT	SHEET No.	TOTAL SHEETS
04	CC	680	0.0/R12.8	123	504

Han-Bin Liang 06/22/09
REGISTERED CIVIL ENGINEER DATE

2-1-10
PLANS APPROVAL DATE

REGISTERED PROFESSIONAL ENGINEER
HAN-BIN LIANG
No. C 48404
Exp. 6/30/10
CIVIL
STATE OF CALIFORNIA

THE STATE OF CALIFORNIA OR ITS OFFICERS OR AGENTS SHALL NOT BE RESPONSIBLE FOR THE ACCURACY OR COMPLETENESS OF SCANNED COPIES OF THIS PLAN SHEET.

WRECO
1243 ALPINE ROAD
SUITE 108
WALNUT CREEK, CA 94596

CALTRANS
111 GRAND AVENUE
OAKLAND, CA 94612

- FOR ACCURATE RIGHT OF WAY AND ACCESS DATA, CONTACT RIGHT OF WAY ENGINEERING AT THE DISTRICT OFFICE.

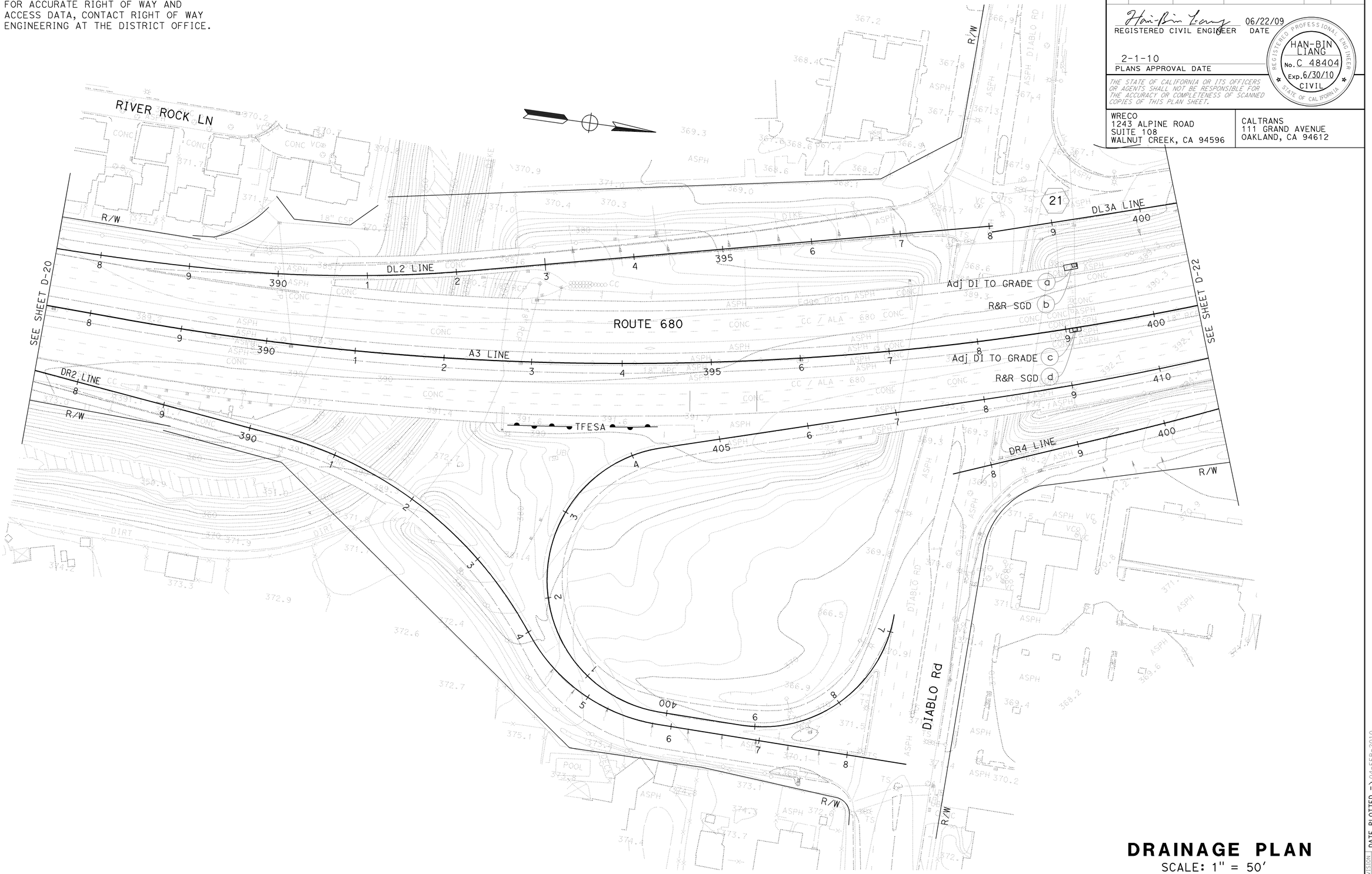

FOR NOTES, ABBREVIATIONS &/OR LEGEND, SEE SHEET D-1

THIS PLAN ACCURATE FOR DRAINAGE WORK ONLY

DRAINAGE PLAN

SCALE: 1" = 50'

D-21

REVISED BY	DATE REVISED
RP	7/31/09

RAJA PERIKETI
CHRIS SEWELL

CALCULATED-DESIGNED BY
CHECKED BY

CONSULTANT FUNCTIONAL SUPERVISOR
HAN-BIN LIANG

STATE OF CALIFORNIA - DEPARTMENT OF TRANSPORTATION
Caltrans

LAST REVISION
DATE PLOTTED => 04-FEB-2010
TIME PLOTTED => 09:00
07-31-09

BORDER LAST REVISED 4/11/2008

RELATIVE BORDER SCALE IS IN INCHES 0 1 2 3

USERNAME => trmikesl
DGN FILE => 4470u1a021.dgn

CU 04236

EA 4470U1

- FOR ACCURATE RIGHT OF WAY AND ACCESS DATA, CONTACT RIGHT OF WAY ENGINEERING AT THE DISTRICT OFFICE.

Dist	COUNTY	ROUTE	POST MILES TOTAL PROJECT	SHEET No.	TOTAL SHEETS
04	CC	680	0.0/R12.8	124	504

Han-Bin Liang 06/22/09
REGISTERED CIVIL ENGINEER DATE

2-1-10
PLANS APPROVAL DATE

REGISTERED PROFESSIONAL ENGINEER
HAN-BIN LIANG
No. C 48404
Exp. 6/30/10
CIVIL
STATE OF CALIFORNIA

THE STATE OF CALIFORNIA OR ITS OFFICERS OR AGENTS SHALL NOT BE RESPONSIBLE FOR THE ACCURACY OR COMPLETENESS OF SCANNED COPIES OF THIS PLAN SHEET.

WRECO
1243 ALPINE ROAD
SUITE 108
WALNUT CREEK, CA 94596

CALTRANS
111 GRAND AVENUE
OAKLAND, CA 94612

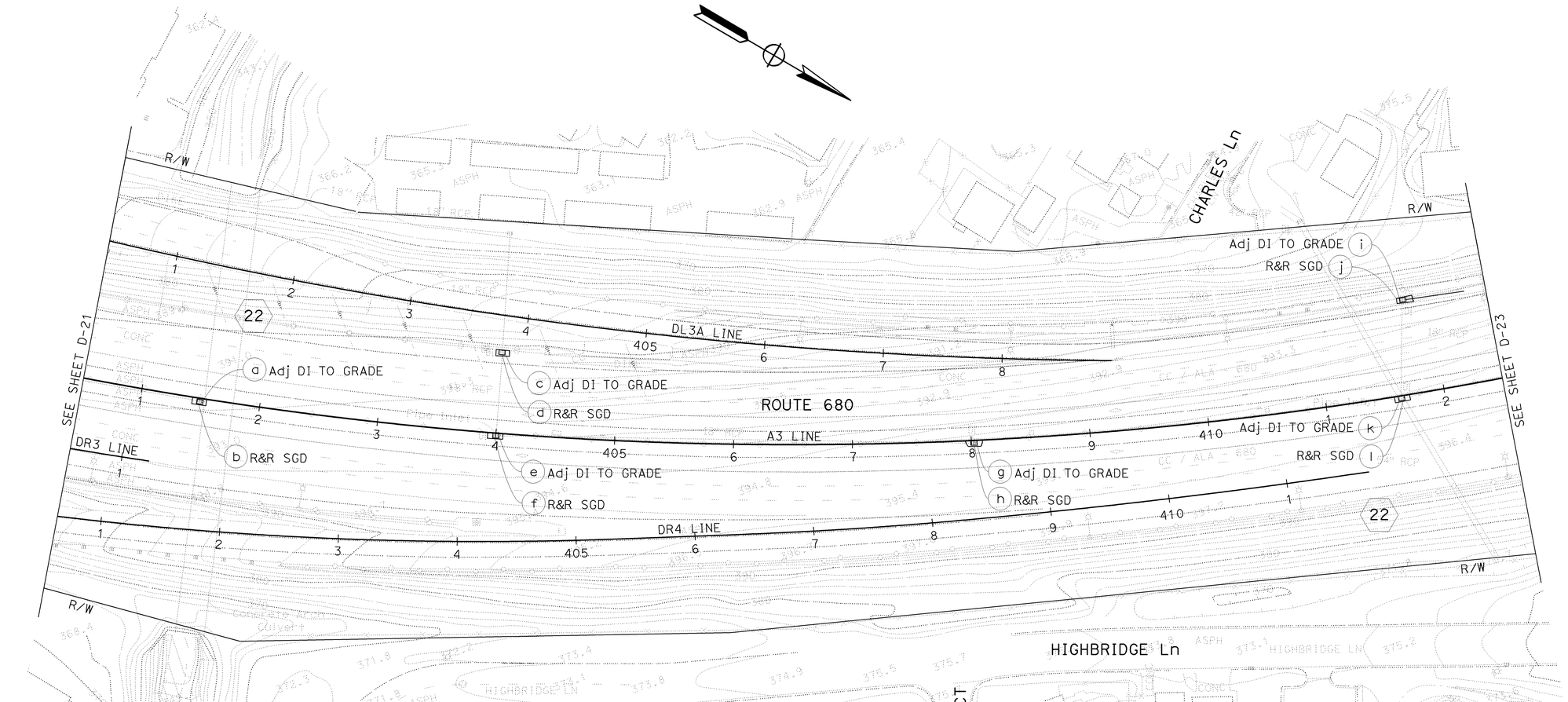

DRAINAGE PLAN

SCALE: 1" = 50'

FOR NOTES, ABBREVIATIONS &/OR LEGEND, SEE SHEET D-1

THIS PLAN ACCURATE FOR DRAINAGE WORK ONLY

D-22

REVISED BY	DATE REVISED
RP	7/31/09

CALCULATED-DESIGNED BY
CHECKED BY
CONSULTANT FUNCTIONAL SUPERVISOR: HAN-BIN LIANG
STATE OF CALIFORNIA - DEPARTMENT OF TRANSPORTATION
Caltrans

LAST REVISION | DATE PLOTTED => 04-FEB-2010
TIME PLOTTED => 09:00
07-31-09

Dist	COUNTY	ROUTE	POST MILES TOTAL PROJECT	SHEET No.	TOTAL SHEETS
04	CC	680	0.0/R12.8	125	504

Han-Bin Liang 06/22/09
REGISTERED CIVIL ENGINEER DATE

2-1-10
PLANS APPROVAL DATE

REGISTERED PROFESSIONAL ENGINEER
HAN-BIN LIANG
No. C 48404
Exp. 6/30/10
CIVIL
STATE OF CALIFORNIA

THE STATE OF CALIFORNIA OR ITS OFFICERS OR AGENTS SHALL NOT BE RESPONSIBLE FOR THE ACCURACY OR COMPLETENESS OF SCANNED COPIES OF THIS PLAN SHEET.

WRECO
1243 ALPINE ROAD
SUITE 108
WALNUT CREEK, CA 94596

CALTRANS
111 GRAND AVENUE
OAKLAND, CA 94612

- FOR ACCURATE RIGHT OF WAY AND ACCESS DATA, CONTACT RIGHT OF WAY ENGINEERING AT THE DISTRICT OFFICE.

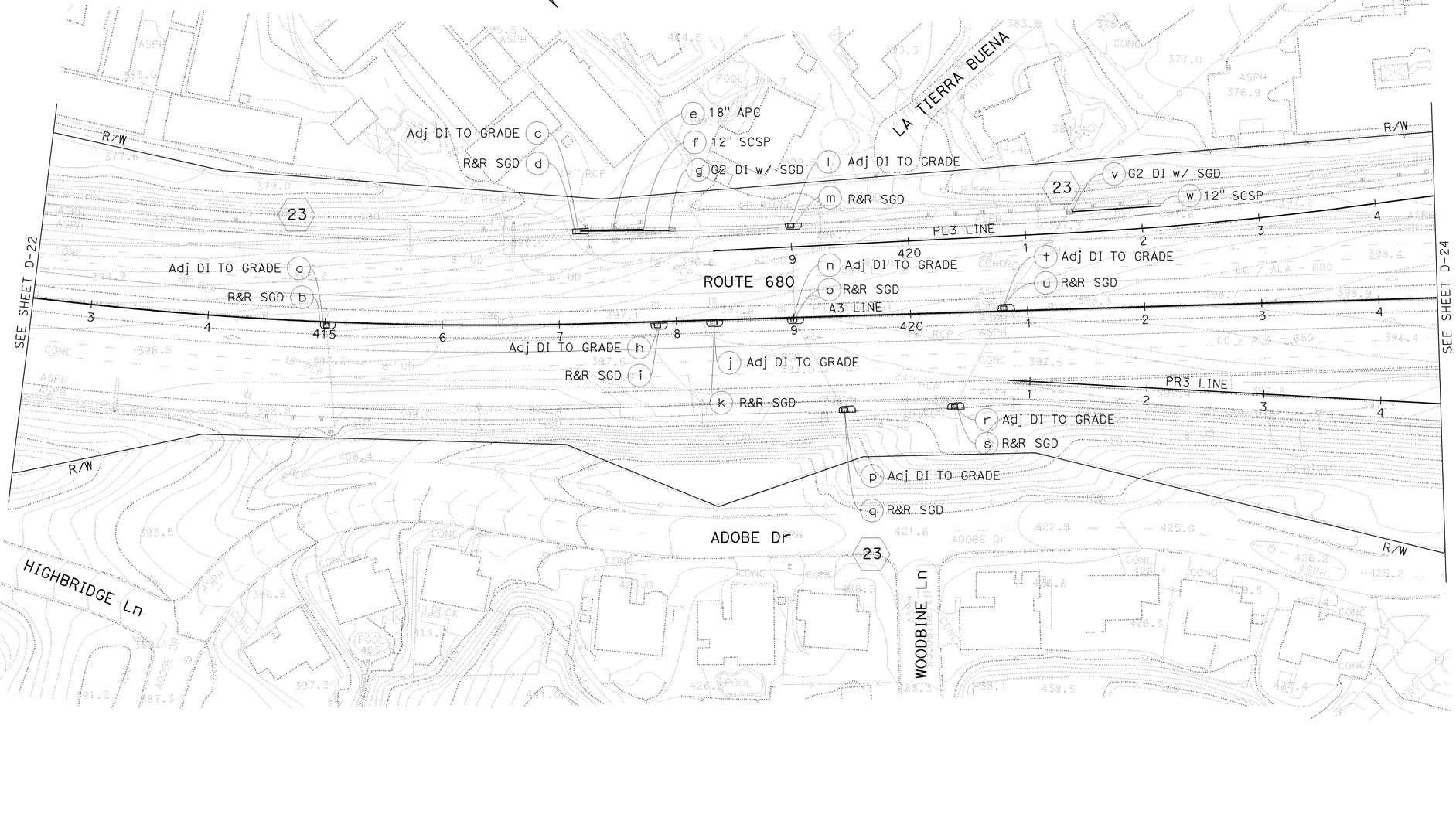

DRAINAGE PLAN

SCALE: 1" = 50'

D-23

FOR NOTES, ABBREVIATIONS &/OR LEGEND, SEE SHEET D-1

THIS PLAN ACCURATE FOR DRAINAGE WORK ONLY

RAJA PERIKETI
CHRIS SEWELL
HAN-BIN LIANG
RP
7/31/09

CALCULATED-DESIGNED BY
CHECKED BY
REVISED BY
DATE REVISED
CONSULTANT FUNCTIONAL SUPERVISOR

STATE OF CALIFORNIA - DEPARTMENT OF TRANSPORTATION
Caltrans

LAST REVISION | DATE PLOTTED => 04-FEB-2010
07-31-09 | TIME PLOTTED => 09:00

BORDER LAST REVISED 4/11/2008

RELATIVE BORDER SCALE IS IN INCHES 0 1 2 3

USERNAME => trmikesl
DGN FILE => 44470uia023.dgn

CU 04236

EA 4470U1

- FOR ACCURATE RIGHT OF WAY AND ACCESS DATA, CONTACT RIGHT OF WAY ENGINEERING AT THE DISTRICT OFFICE.

Dist	COUNTY	ROUTE	POST MILES TOTAL PROJECT	SHEET No.	TOTAL SHEETS
04	CC	680	0.0/R12.8	126	504

Han-Bin Liang 06/22/09
REGISTERED CIVIL ENGINEER DATE

2-1-10
PLANS APPROVAL DATE

REGISTERED PROFESSIONAL ENGINEER
HAN-BIN LIANG
No. C 48404
Exp. 6/30/10
CIVIL
STATE OF CALIFORNIA

THE STATE OF CALIFORNIA OR ITS OFFICERS OR AGENTS SHALL NOT BE RESPONSIBLE FOR THE ACCURACY OR COMPLETENESS OF SCANNED COPIES OF THIS PLAN SHEET.

WRECO
1243 ALPINE ROAD
SUITE 108
WALNUT CREEK, CA 94596

CALTRANS
111 GRAND AVENUE
OAKLAND, CA 94612

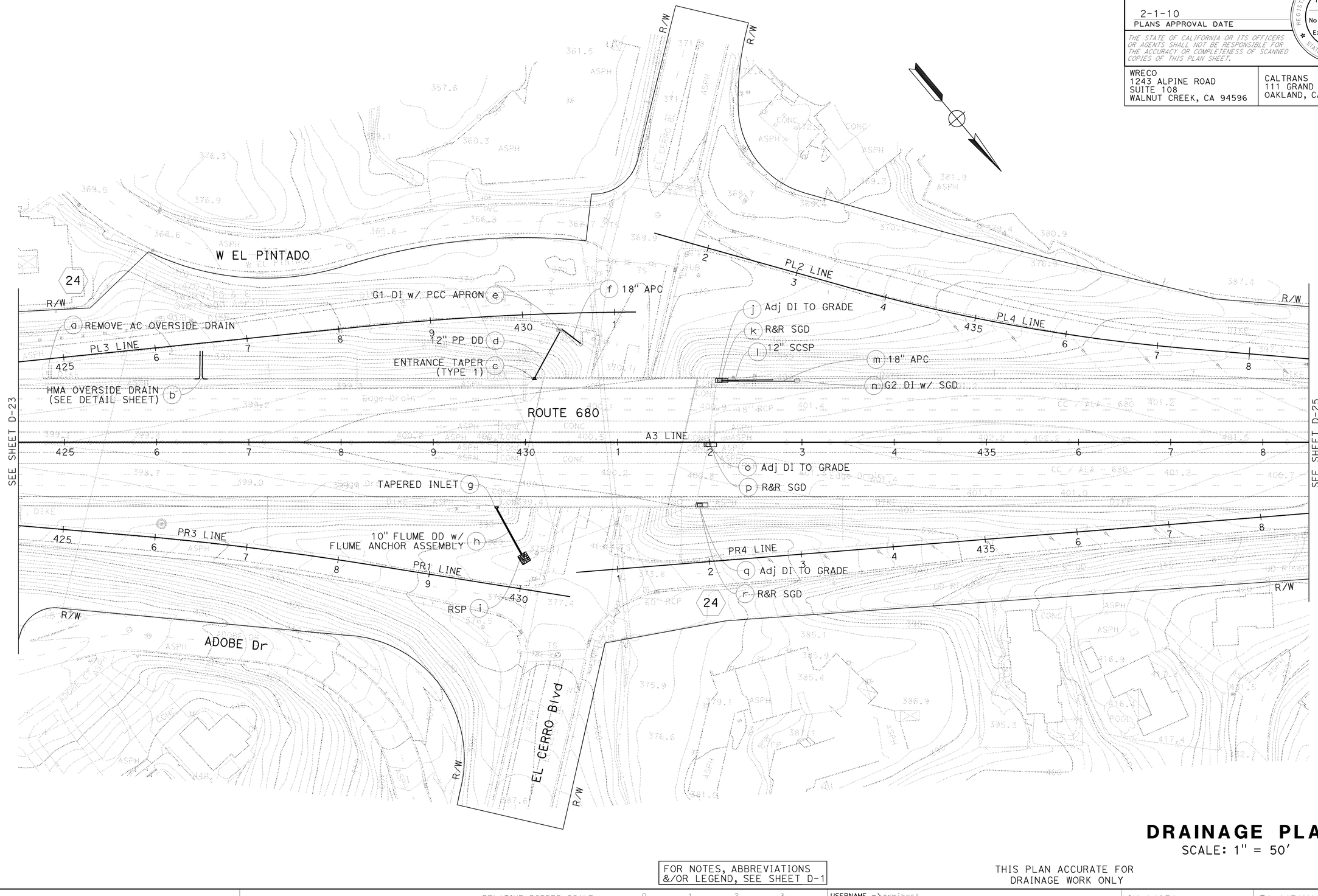

DRAINAGE PLAN

SCALE: 1" = 50'

D-24

FOR NOTES, ABBREVIATIONS &/OR LEGEND, SEE SHEET D-1

THIS PLAN ACCURATE FOR DRAINAGE WORK ONLY

STATE OF CALIFORNIA - DEPARTMENT OF TRANSPORTATION
Caltrans

CONSULTANT FUNCTIONAL SUPERVISOR: HAN-BIN LIANG

CALCULATED-DESIGNED BY: RAJA PERIKETI
CHECKED BY: CHRIS SEWELL

REVISED BY: RP
DATE REVISED: 7/31/09

BORDER LAST REVISED 4/11/2008

RELATIVE BORDER SCALE IS IN INCHES 0 1 2 3

USERNAME => trmikesl
DGN FILE => 44470uia024.dgn

CU 04236

EA 4470U1

LAST REVISION DATE PLOTTED => 04-FEB-2010
TIME PLOTTED => 09:00
07-31-09

Dist	COUNTY	ROUTE	POST MILES TOTAL PROJECT	SHEET No.	TOTAL SHEETS
04	CC	680	0.0/R12.8	127	504

Han-Bin Liang 06/22/09
REGISTERED CIVIL ENGINEER DATE

2-1-10
PLANS APPROVAL DATE

REGISTERED PROFESSIONAL ENGINEER
HAN-BIN LIANG
No. C 48404
Exp. 6/30/10
CIVIL
STATE OF CALIFORNIA

THE STATE OF CALIFORNIA OR ITS OFFICERS OR AGENTS SHALL NOT BE RESPONSIBLE FOR THE ACCURACY OR COMPLETENESS OF SCANNED COPIES OF THIS PLAN SHEET.

WRECO
1243 ALPINE ROAD
SUITE 108
WALNUT CREEK, CA 94596

CALTRANS
111 GRAND AVENUE
OAKLAND, CA 94612

· FOR ACCURATE RIGHT OF WAY AND ACCESS DATA, CONTACT RIGHT OF WAY ENGINEERING AT THE DISTRICT OFFICE.

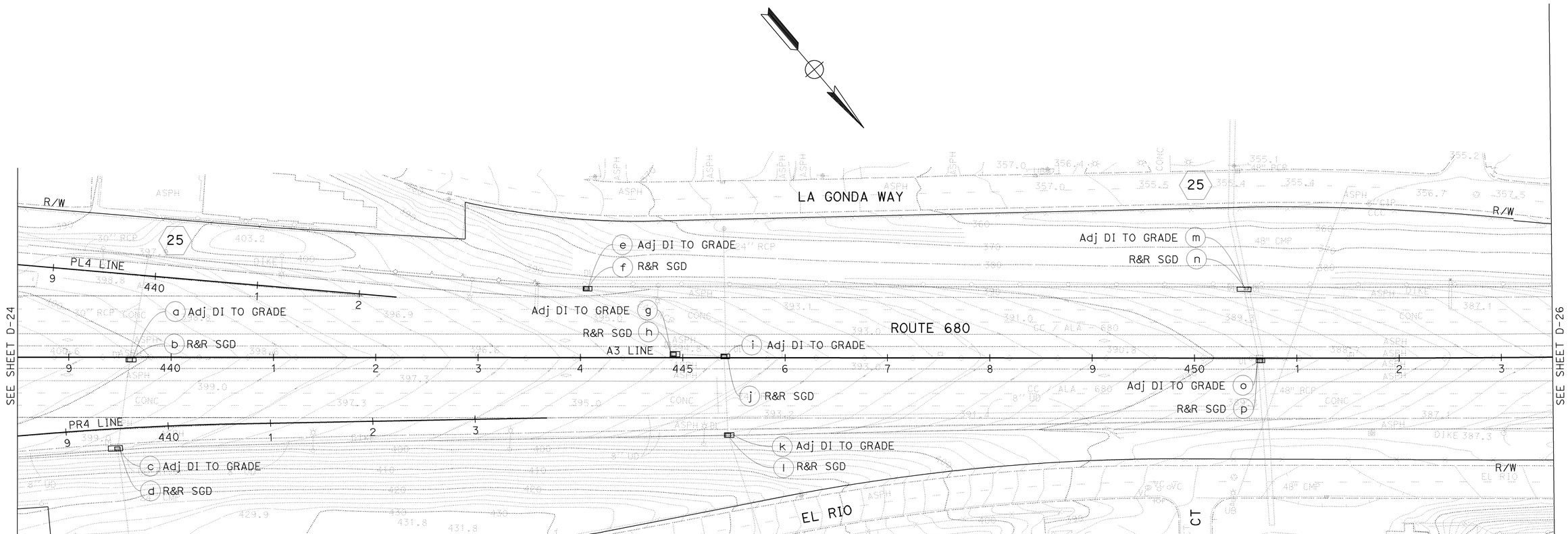

FOR NOTES, ABBREVIATIONS &/OR LEGEND, SEE SHEET D-1

THIS PLAN ACCURATE FOR DRAINAGE WORK ONLY

DRAINAGE PLAN

SCALE: 1" = 50'

D-25

STATE OF CALIFORNIA - DEPARTMENT OF TRANSPORTATION
Caltrans

CONSULTANT FUNCTIONAL SUPERVISOR: HAN-BIN LIANG

REVISED BY	DATE REVISED
RP	7/31/09

CALCULATED-DESIGNED BY: RAJA PERIKETI
CHECKED BY: CHRIS SEWELL
SUPERVISOR

LAST REVISION | DATE PLOTTED => 04-FEB-2010
07-31-09 | TIME PLOTTED => 09:00

BORDER LAST REVISED 4/11/2008

RELATIVE BORDER SCALE IS IN INCHES 0 1 2 3

USERNAME => trmikesl
DGN FILE => 44470uia025.dgn

CU 04236

EA 4470U1

Dist	COUNTY	ROUTE	POST MILES TOTAL PROJECT	SHEET No.	TOTAL SHEETS
04	CC	680	0.0/R12.8	128	504

Han-Bin Liang 06/22/09
REGISTERED CIVIL ENGINEER DATE

2-1-10
PLANS APPROVAL DATE

REGISTERED PROFESSIONAL ENGINEER
HAN-BIN LIANG
No. C 48404
Exp. 6/30/10
CIVIL
STATE OF CALIFORNIA

THE STATE OF CALIFORNIA OR ITS OFFICERS OR AGENTS SHALL NOT BE RESPONSIBLE FOR THE ACCURACY OR COMPLETENESS OF SCANNED COPIES OF THIS PLAN SHEET.

WRECO
1243 ALPINE ROAD
SUITE 108
WALNUT CREEK, CA 94596

CALTRANS
111 GRAND AVENUE
OAKLAND, CA 94612

· FOR ACCURATE RIGHT OF WAY AND ACCESS DATA, CONTACT RIGHT OF WAY ENGINEERING AT THE DISTRICT OFFICE.

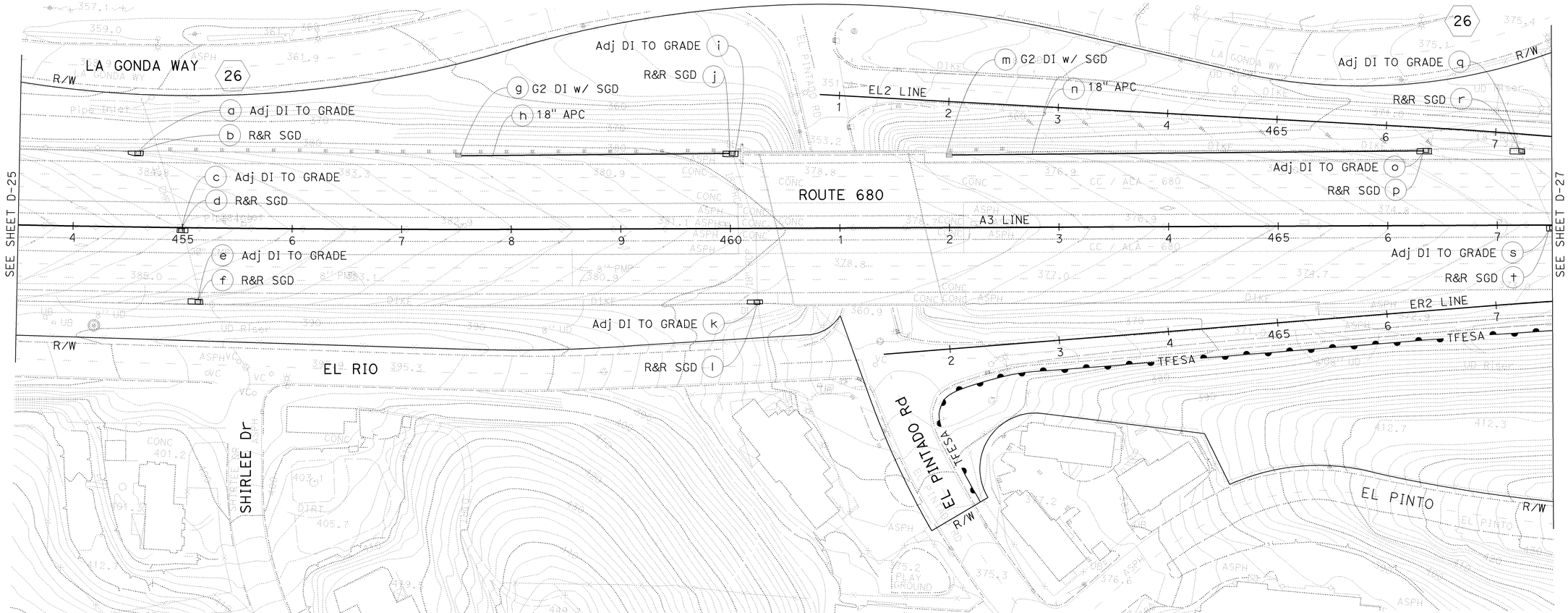

DRAINAGE PLAN

SCALE: 1" = 50'

D-26

FOR NOTES, ABBREVIATIONS &/OR LEGEND, SEE SHEET D-1

THIS PLAN ACCURATE FOR DRAINAGE WORK ONLY

RP | 7/31/09 (REVISED BY | DATE REVISED)
RAJA PERIKETI | CHRIS SEWELL (CALCULATED-DESIGNED BY | CHECKED BY)
HAN-BIN LIANG (CONSULTANT FUNCTIONAL SUPERVISOR)
STATE OF CALIFORNIA - DEPARTMENT OF TRANSPORTATION

LAST REVISION | DATE PLOTTED => 04-FEB-2010 | TIME PLOTTED => 09:00
07-31-09

BORDER LAST REVISED 4/11/2008 | RELATIVE BORDER SCALE IS IN INCHES 0 1 2 3 | USERNAME => trmikesl | DGN FILE => 44470uia026.dgn | CU 04236 | EA 4470U1

Dist	COUNTY	ROUTE	POST MILES TOTAL PROJECT	SHEET No.	TOTAL SHEETS
04	CC	680	0.0/R12.8	129	504

Han-Bin Liang 06/22/09
REGISTERED CIVIL ENGINEER DATE

REGISTERED PROFESSIONAL ENGINEER
HAN-BIN LIANG
No. C 48404
Exp. 6/30/10
CIVIL
STATE OF CALIFORNIA

2-1-10
PLANS APPROVAL DATE

THE STATE OF CALIFORNIA OR ITS OFFICERS OR AGENTS SHALL NOT BE RESPONSIBLE FOR THE ACCURACY OR COMPLETENESS OF SCANNED COPIES OF THIS PLAN SHEET.

WRECO
1243 ALPINE ROAD
SUITE 108
WALNUT CREEK, CA 94596

CALTRANS
111 GRAND AVENUE
OAKLAND, CA 94612

- FOR ACCURATE RIGHT OF WAY AND ACCESS DATA, CONTACT RIGHT OF WAY ENGINEERING AT THE DISTRICT OFFICE.

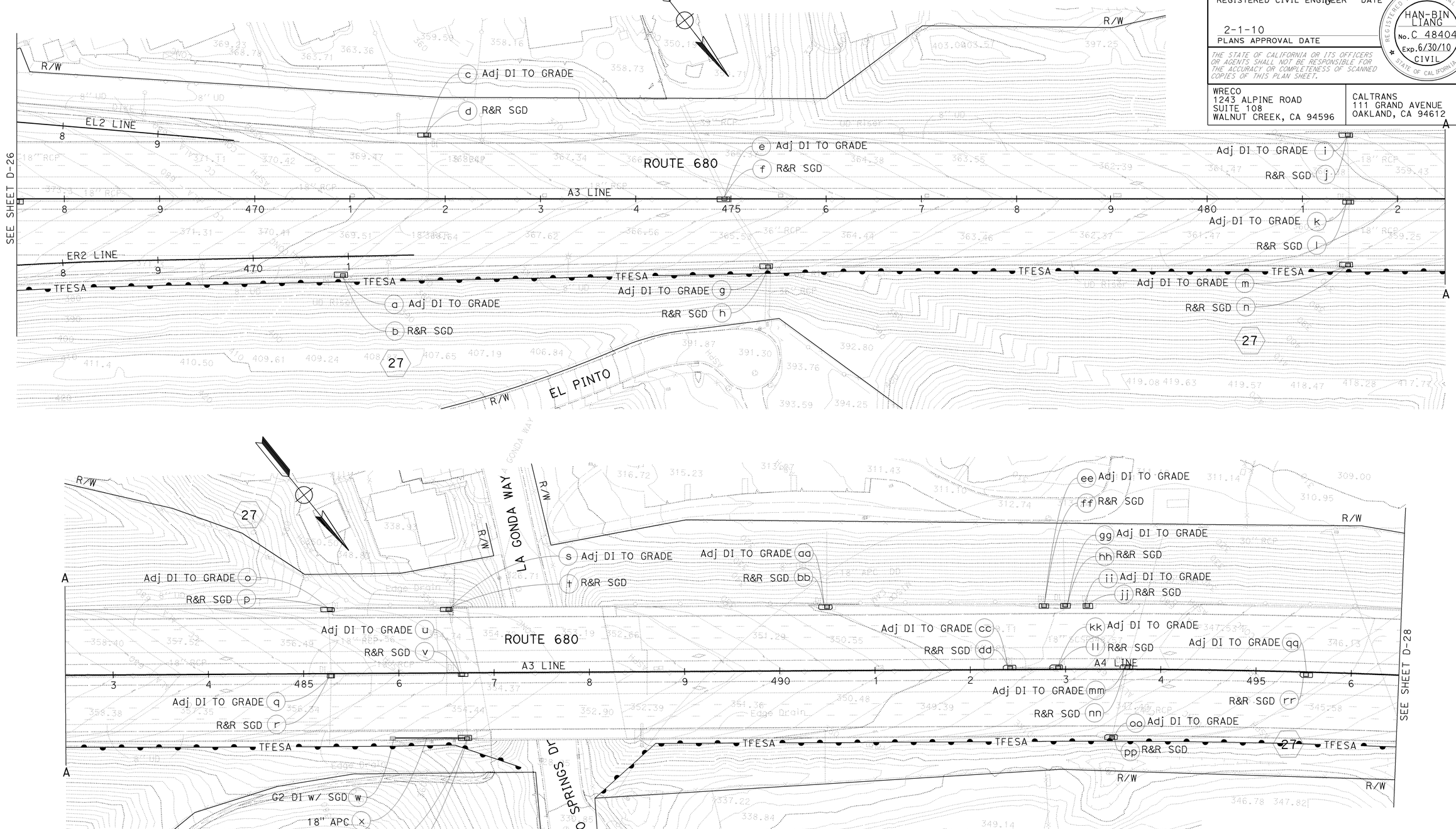

DRAINAGE PLAN

SCALE: 1" = 50'

D-27

FOR NOTES, ABBREVIATIONS &/OR LEGEND, SEE SHEET D-1

THIS PLAN ACCURATE FOR DRAINAGE WORK ONLY

STATE OF CALIFORNIA - DEPARTMENT OF TRANSPORTATION
Caltrans

CONSULTANT FUNCTIONAL SUPERVISOR: HAN-BIN LIANG

CALCULATED-DESIGNED BY: RAJA PERIKETI
CHECKED BY: CHRIS SEWELL

REVISED BY: RP
DATE REVISED: 7/31/09

LAST REVISION DATE PLOTTED => 04-FEB-2010
TIME PLOTTED => 09:00
07-31-09

BORDER LAST REVISED 4/11/2008

RELATIVE BORDER SCALE IS IN INCHES 0 1 2 3

USERNAME => trmikesl
DGN FILE => 4470u1a027.dgn

CU 04236

EA 4470U1

Dist	COUNTY	ROUTE	POST MILES TOTAL PROJECT	SHEET No.	TOTAL SHEETS
04	CC	680	0.0/R12.8	130	504

Han-Bin Liang 06/22/09
REGISTERED CIVIL ENGINEER DATE

HAN-BIN LIANG No. C 48404 Exp.6/30/10 CIVIL — REGISTERED PROFESSIONAL ENGINEER — STATE OF CALIFORNIA

2-1-10
PLANS APPROVAL DATE

THE STATE OF CALIFORNIA OR ITS OFFICERS OR AGENTS SHALL NOT BE RESPONSIBLE FOR THE ACCURACY OR COMPLETENESS OF SCANNED COPIES OF THIS PLAN SHEET.

WRECO
1243 ALPINE ROAD
SUITE 108
WALNUT CREEK, CA 94596

CALTRANS
111 GRAND AVENUE
OAKLAND, CA 94612

- FOR ACCURATE RIGHT OF WAY AND ACCESS DATA, CONTACT RIGHT OF WAY ENGINEERING AT THE DISTRICT OFFICE.

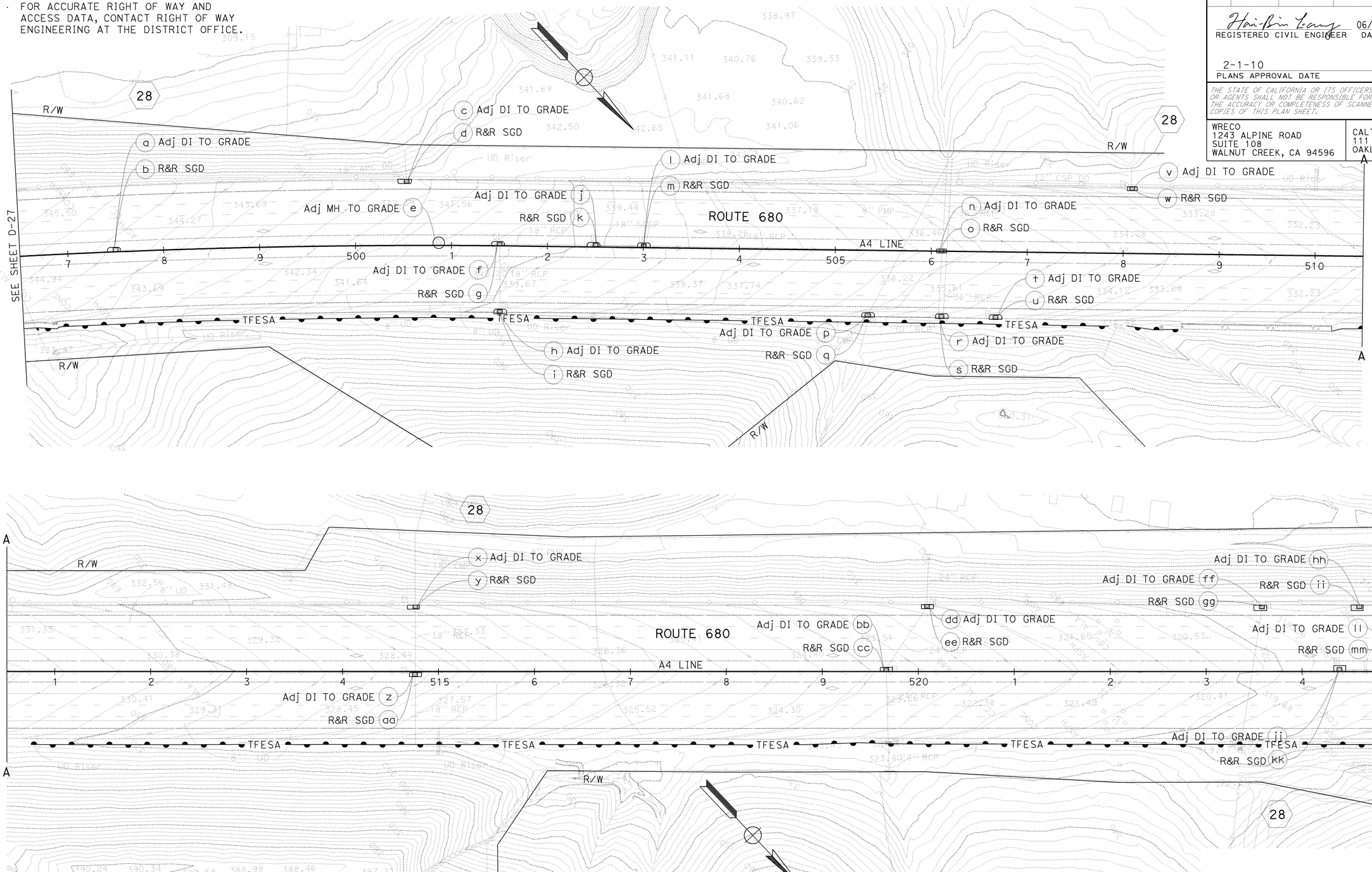

DRAINAGE PLAN

SCALE: 1" = 50'

D-28

FOR NOTES, ABBREVIATIONS &/OR LEGEND, SEE SHEET D-1

THIS PLAN ACCURATE FOR DRAINAGE WORK ONLY

RP 7/31/09 — REVISED BY / DATE REVISED
RAJA PERIKETI — CALCULATED-DESIGNED BY
CHRIS SEWELL — CHECKED BY
HAN-BIN LIANG — CONSULTANT FUNCTIONAL SUPERVISOR
STATE OF CALIFORNIA - DEPARTMENT OF TRANSPORTATION
Caltrans

LAST REVISION DATE PLOTTED => 04-FEB-2010
TIME PLOTTED => 09:00
07-31-09

BORDER LAST REVISED 4/11/2008
RELATIVE BORDER SCALE IS IN INCHES 0 1 2 3
USERNAME => trmikesl
DGN FILE => 4470u1a028.dgn
CU 04236
EA 4470U1

- FOR ACCURATE RIGHT OF WAY AND ACCESS DATA, CONTACT RIGHT OF WAY ENGINEERING AT THE DISTRICT OFFICE.

Dist	COUNTY	ROUTE	POST MILES TOTAL PROJECT	SHEET No.	TOTAL SHEETS
04	CC	680	0.0/R12.8	131	504

Han-Bin Liang 06/22/09
REGISTERED CIVIL ENGINEER DATE

2-1-10
PLANS APPROVAL DATE

REGISTERED PROFESSIONAL ENGINEER
HAN-BIN LIANG
No. C 48404
Exp. 6/30/10
CIVIL
STATE OF CALIFORNIA

THE STATE OF CALIFORNIA OR ITS OFFICERS OR AGENTS SHALL NOT BE RESPONSIBLE FOR THE ACCURACY OR COMPLETENESS OF SCANNED COPIES OF THIS PLAN SHEET.

WRECO
1243 ALPINE ROAD
SUITE 108
WALNUT CREEK, CA 94596

CALTRANS
111 GRAND AVENUE
OAKLAND, CA 94612

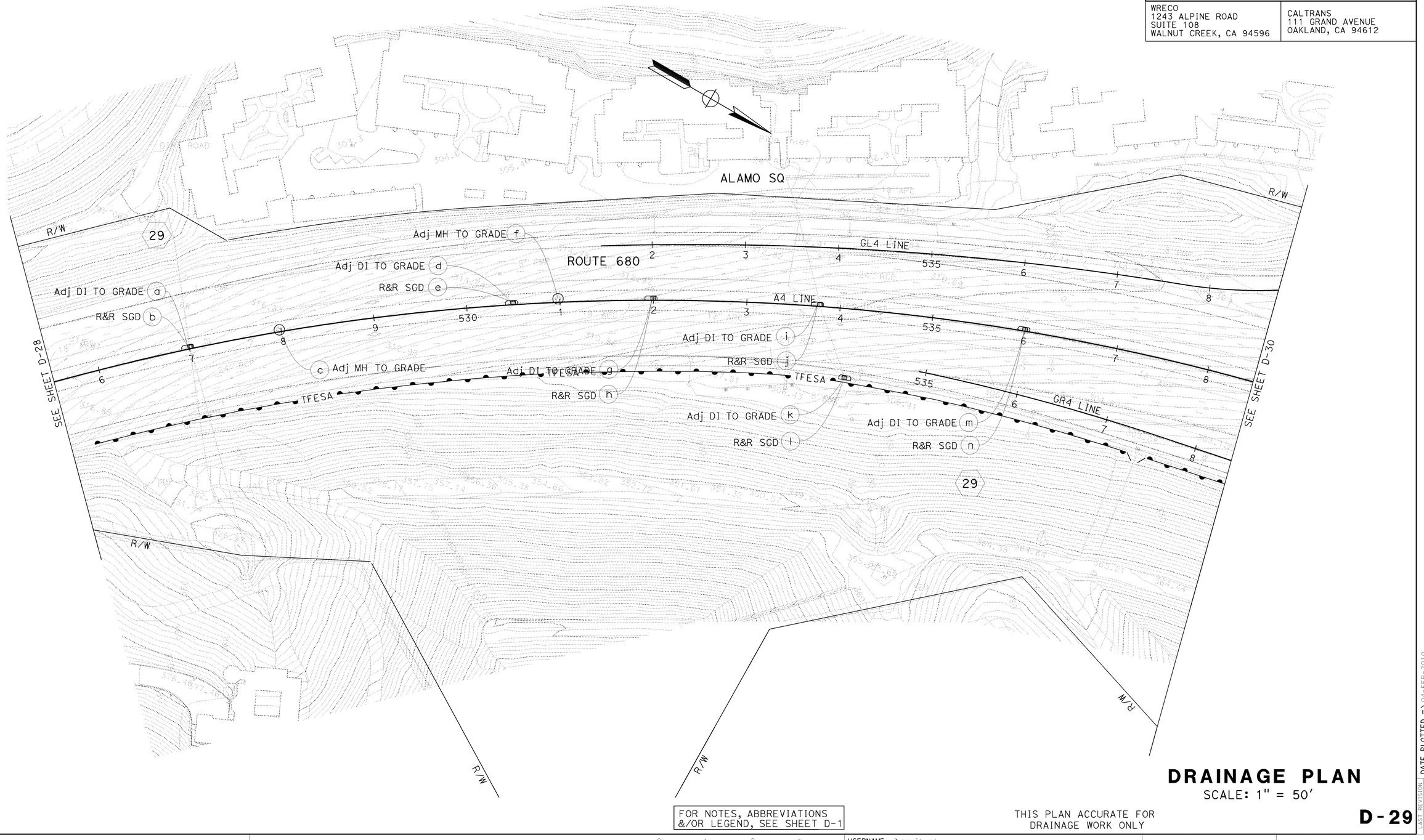

DRAINAGE PLAN

SCALE: 1" = 50'

FOR NOTES, ABBREVIATIONS &/OR LEGEND, SEE SHEET D-1

THIS PLAN ACCURATE FOR DRAINAGE WORK ONLY

D-29

STATE OF CALIFORNIA - DEPARTMENT OF TRANSPORTATION
Caltrans

REVISED BY	DATE REVISED
RP	7/31/09

CALCULATED-DESIGNED BY: RAJA PERIKETI
CHECKED BY: CHRIS SEWELL
CONSULTANT FUNCTIONAL SUPERVISOR: HAN-BIN LIANG

LAST REVISION | DATE PLOTTED => 04-FEB-2010
07-31-09 | TIME PLOTTED => 09:00

BORDER LAST REVISED 4/11/2008

RELATIVE BORDER SCALE IS IN INCHES 0 1 2 3

USERNAME => trmikesl
DGN FILE => 4447Ouia029.dgn

CU 04236

EA 4470U1

Dist	COUNTY	ROUTE	POST MILES TOTAL PROJECT	SHEET No.	TOTAL SHEETS
04	CC	680	0.0/R12.8	132	504

Han-Bin Liang 06/22/09
REGISTERED CIVIL ENGINEER DATE

REGISTERED PROFESSIONAL ENGINEER
HAN-BIN LIANG
No. C 48404
Exp. 6/30/10
CIVIL
STATE OF CALIFORNIA

2-1-10
PLANS APPROVAL DATE

THE STATE OF CALIFORNIA OR ITS OFFICERS OR AGENTS SHALL NOT BE RESPONSIBLE FOR THE ACCURACY OR COMPLETENESS OF SCANNED COPIES OF THIS PLAN SHEET.

WRECO
1243 ALPINE ROAD
SUITE 108
WALNUT CREEK, CA 94596

CALTRANS
111 GRAND AVENUE
OAKLAND, CA 94612

· FOR ACCURATE RIGHT OF WAY AND ACCESS DATA, CONTACT RIGHT OF WAY ENGINEERING AT THE DISTRICT OFFICE.

DRAINAGE PLAN

SCALE: 1" = 50'

FOR NOTES, ABBREVIATIONS &/OR LEGEND, SEE SHEET D-1

THIS PLAN ACCURATE FOR DRAINAGE WORK ONLY

D-30

CALCULATED-DESIGNED BY	RP	7/31/09
CHECKED BY	CHRIS SEWELL	DATE REVISED
CONSULTANT FUNCTIONAL SUPERVISOR	HAN-BIN LIANG	REVISED BY

STATE OF CALIFORNIA - DEPARTMENT OF TRANSPORTATION
Caltrans

LAST REVISION 07-31-09 | DATE PLOTTED => 04-FEB-2010 | TIME PLOTTED => 09:01

BORDER LAST REVISED 4/11/2008

RELATIVE BORDER SCALE IS IN INCHES 0 1 2 3

USERNAME => trmikesl
DGN FILE => 44470uia030.dgn

CU 04236

EA 4470U1

- FOR ACCURATE RIGHT OF WAY AND ACCESS DATA, CONTACT RIGHT OF WAY ENGINEERING AT THE DISTRICT OFFICE.

Dist	COUNTY	ROUTE	POST MILES TOTAL PROJECT	SHEET No.	TOTAL SHEETS
04	CC	680	0.0/R12.8	133	504

Han-Bin Liang 06/22/09
REGISTERED CIVIL ENGINEER DATE

2-1-10
PLANS APPROVAL DATE

REGISTERED PROFESSIONAL ENGINEER
HAN-BIN LIANG
No. C 48404
Exp. 6/30/10
CIVIL
STATE OF CALIFORNIA

THE STATE OF CALIFORNIA OR ITS OFFICERS OR AGENTS SHALL NOT BE RESPONSIBLE FOR THE ACCURACY OR COMPLETENESS OF SCANNED COPIES OF THIS PLAN SHEET.

WRECO
1243 ALPINE ROAD
SUITE 108
WALNUT CREEK, CA 94596

CALTRANS
111 GRAND AVENUE
OAKLAND, CA 94612

SEE SHEET D-30

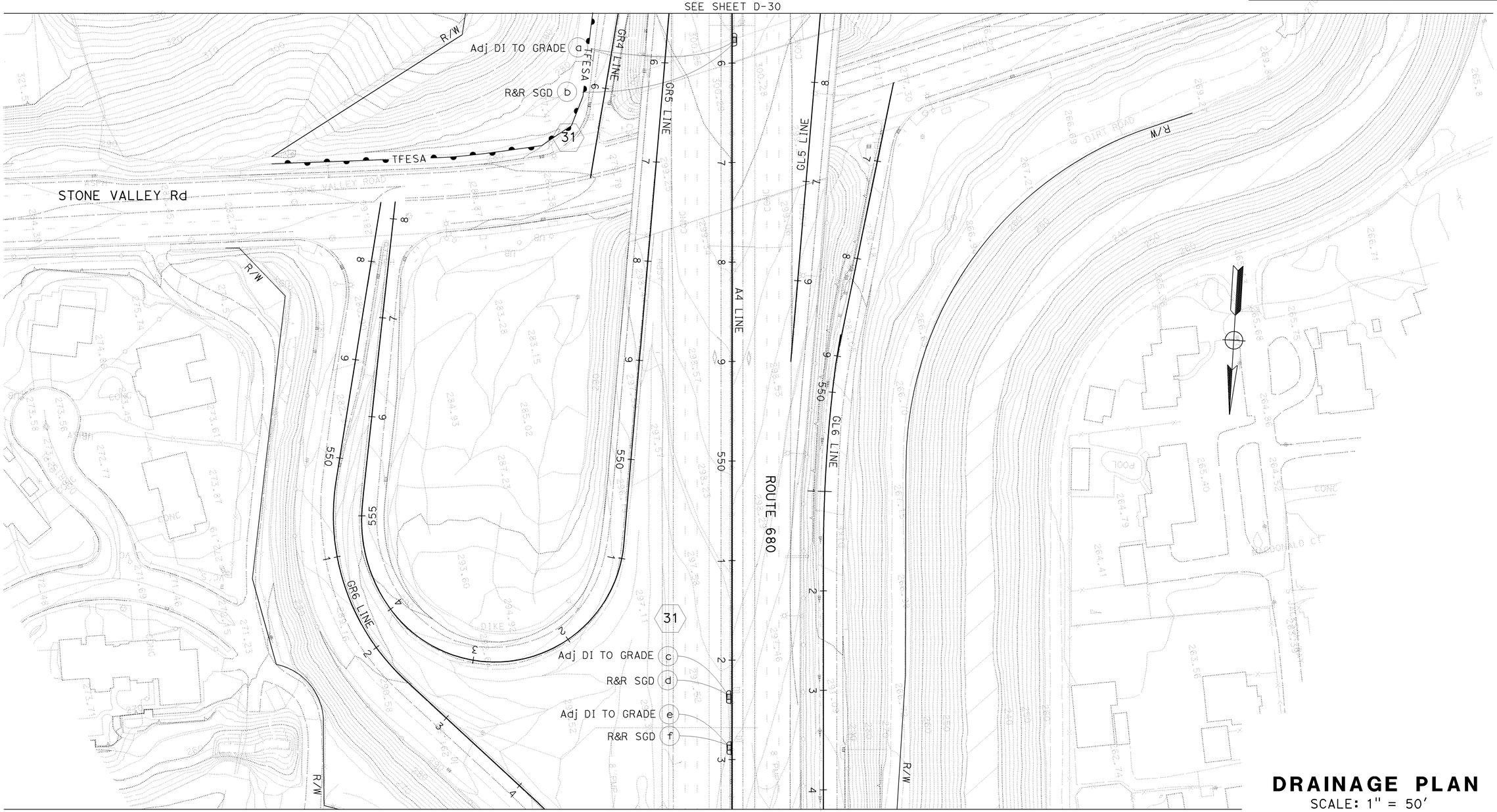

SEE SHEET D-32

FOR NOTES, ABBREVIATIONS &/OR LEGEND, SEE SHEET D-1

THIS PLAN ACCURATE FOR DRAINAGE WORK ONLY

DRAINAGE PLAN

SCALE: 1" = 50'

D-31

REVISED BY	DATE REVISED
RP	7/31/09

RAJA PERIKETI
CHRIS SEWELL

CALCULATED-DESIGNED BY
CHECKED BY

CONSULTANT FUNCTIONAL SUPERVISOR
HAN-BIN LIANG

STATE OF CALIFORNIA - DEPARTMENT OF TRANSPORTATION
Caltrans

LAST REVISION DATE PLOTTED => 04-FEB-2010
TIME PLOTTED => 09:01
07-31-09

BORDER LAST REVISED 4/11/2008

RELATIVE BORDER SCALE IS IN INCHES 0 1 2 3

USERNAME => trmikesl
DGN FILE => 4447Ouia031.dgn

CU 04236

EA 4470U1

Dist	COUNTY	ROUTE	POST MILES TOTAL PROJECT	SHEET No.	TOTAL SHEETS
04	CC	680	0.0/R12.8	134	504

Han-Bin Liang 06/22/09
REGISTERED CIVIL ENGINEER DATE

REGISTERED PROFESSIONAL ENGINEER
HAN-BIN LIANG
No. C 48404
Exp. 6/30/10
CIVIL
STATE OF CALIFORNIA

2-1-10
PLANS APPROVAL DATE

THE STATE OF CALIFORNIA OR ITS OFFICERS OR AGENTS SHALL NOT BE RESPONSIBLE FOR THE ACCURACY OR COMPLETENESS OF SCANNED COPIES OF THIS PLAN SHEET.

WRECO
1243 ALPINE ROAD
SUITE 108
WALNUT CREEK, CA 94596

CALTRANS
111 GRAND AVENUE
OAKLAND, CA 94612

· FOR ACCURATE RIGHT OF WAY AND ACCESS DATA, CONTACT RIGHT OF WAY ENGINEERING AT THE DISTRICT OFFICE.

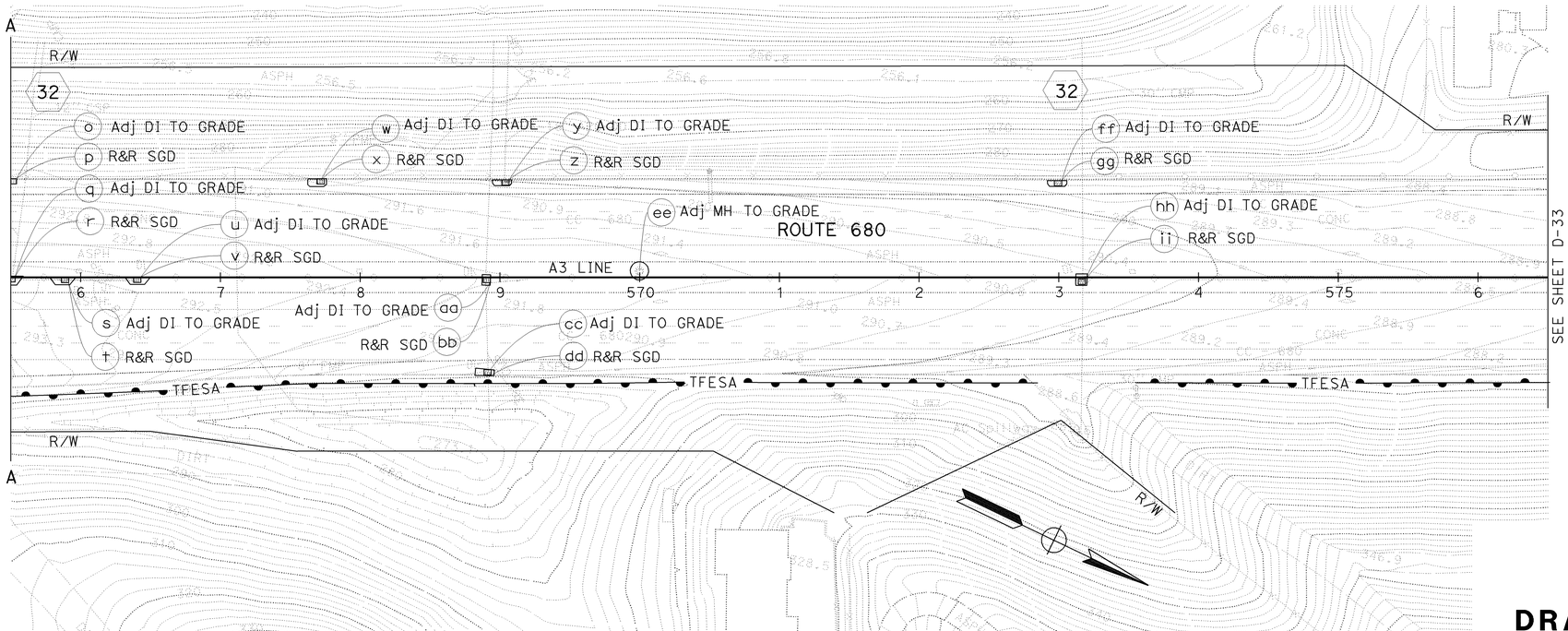

FOR NOTES, ABBREVIATIONS &/OR LEGEND, SEE SHEET D-1

THIS PLAN ACCURATE FOR DRAINAGE WORK ONLY

DRAINAGE PLAN

SCALE: 1" = 50'

D-32

STATE OF CALIFORNIA - DEPARTMENT OF TRANSPORTATION
Caltrans

CONSULTANT FUNCTIONAL SUPERVISOR: HAN-BIN LIANG
CALCULATED-DESIGNED BY: RAJA PERIKETI
CHECKED BY: CHRIS SEWELL
REVISED BY: RP
DATE REVISED: 7/31/09

LAST REVISION | DATE PLOTTED => 04-FEB-2010
07-31-09 | TIME PLOTTED => 09:01

BORDER LAST REVISED 4/11/2008

RELATIVE BORDER SCALE IS IN INCHES 0 1 2 3

USERNAME => trmikesl
DGN FILE => 4447Ouia032.dgn

CU 04236

EA 4470U1

- FOR ACCURATE RIGHT OF WAY AND ACCESS DATA, CONTACT RIGHT OF WAY ENGINEERING AT THE DISTRICT OFFICE.

Dist	COUNTY	ROUTE	POST MILES TOTAL PROJECT	SHEET No.	TOTAL SHEETS
04	CC	680	0.0/R12.8	135	504

Han-Bin Liang 06/22/09
REGISTERED CIVIL ENGINEER DATE

HAN-BIN LIANG No. C 48404 Exp. 6/30/10 CIVIL — REGISTERED PROFESSIONAL ENGINEER — STATE OF CALIFORNIA

2-1-10
PLANS APPROVAL DATE

THE STATE OF CALIFORNIA OR ITS OFFICERS OR AGENTS SHALL NOT BE RESPONSIBLE FOR THE ACCURACY OR COMPLETENESS OF SCANNED COPIES OF THIS PLAN SHEET.

WRECO
1243 ALPINE ROAD
SUITE 108
WALNUT CREEK, CA 94596

CALTRANS
111 GRAND AVENUE
OAKLAND, CA 94612

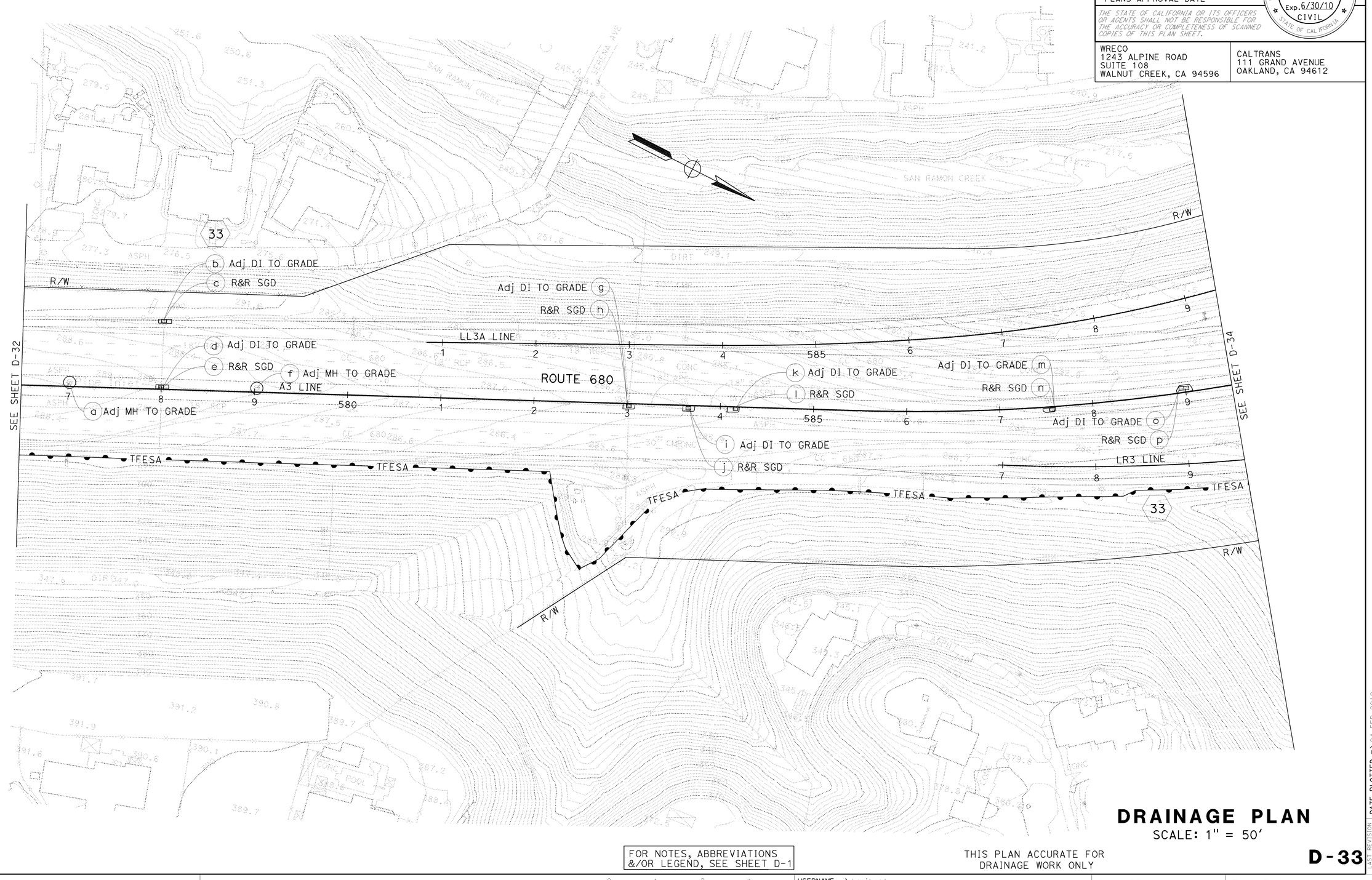

DRAINAGE PLAN

SCALE: 1" = 50'

FOR NOTES, ABBREVIATIONS &/OR LEGEND, SEE SHEET D-1

THIS PLAN ACCURATE FOR DRAINAGE WORK ONLY

D-33

STATE OF CALIFORNIA - DEPARTMENT OF TRANSPORTATION	CONSULTANT FUNCTIONAL SUPERVISOR	CALCULATED-DESIGNED BY	REVISED BY
Caltrans	HAN-BIN LIANG	CHECKED BY	RP
		RAJA PERIKETI	DATE REVISED
		CHRIS SEWELL	7/31/09

LAST REVISION DATE PLOTTED => 04-FEB-2010
TIME PLOTTED => 09:01
07-31-09

BORDER LAST REVISED 4/11/2008

RELATIVE BORDER SCALE IS IN INCHES 0 1 2 3

USERNAME => trmikesl
DGN FILE => 4447Ouia033.dgn

CU 04236

EA 4470U1

Dist	COUNTY	ROUTE	POST MILES TOTAL PROJECT	SHEET No.	TOTAL SHEETS
04	CC	680	0.0/R12.8	136	504

Han-Bin Liang 06/22/09
REGISTERED CIVIL ENGINEER DATE

2-1-10
PLANS APPROVAL DATE

REGISTERED PROFESSIONAL ENGINEER
HAN-BIN LIANG
No. C 48404
Exp. 6/30/10
CIVIL
STATE OF CALIFORNIA

THE STATE OF CALIFORNIA OR ITS OFFICERS OR AGENTS SHALL NOT BE RESPONSIBLE FOR THE ACCURACY OR COMPLETENESS OF SCANNED COPIES OF THIS PLAN SHEET.

WRECO
1243 ALPINE ROAD
SUITE 108
WALNUT CREEK, CA 94596

CALTRANS
111 GRAND AVENUE
OAKLAND, CA 94612

- FOR ACCURATE RIGHT OF WAY AND ACCESS DATA, CONTACT RIGHT OF WAY ENGINEERING AT THE DISTRICT OFFICE.

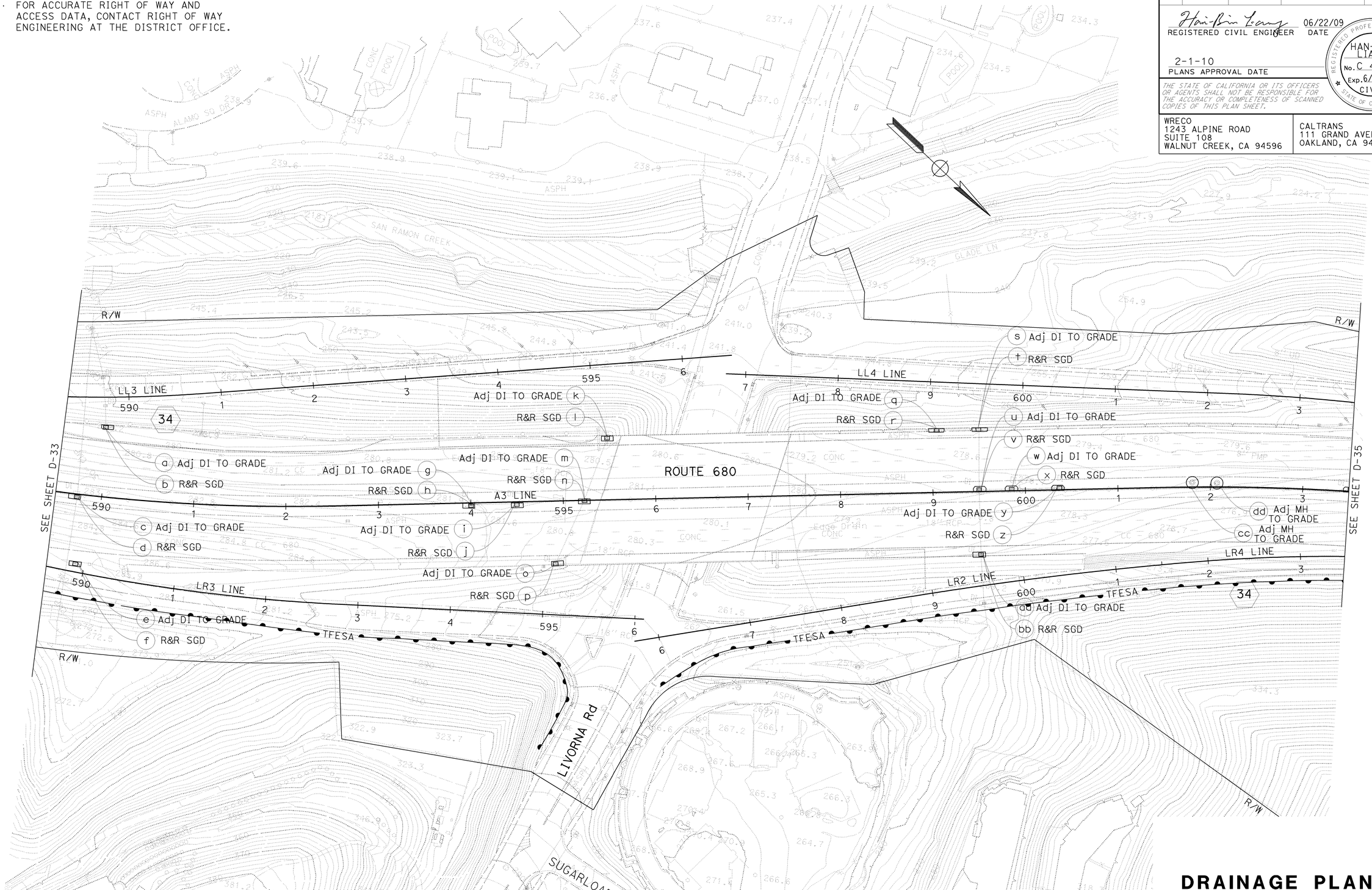

DRAINAGE PLAN

SCALE: 1" = 50'

FOR NOTES, ABBREVIATIONS &/OR LEGEND, SEE SHEET D-1

THIS PLAN ACCURATE FOR DRAINAGE WORK ONLY

D-34

REVISED BY	DATE REVISED
RP	7/31/09

CALCULATED-DESIGNED BY: RAJA PERIKETI
CHECKED BY: CHRIS SEWELL
CONSULTANT FUNCTIONAL SUPERVISOR: HAN-BIN LIANG
STATE OF CALIFORNIA - DEPARTMENT OF TRANSPORTATION

LAST REVISION | DATE PLOTTED => 04-FEB-2010
TIME PLOTTED => 09:01
07-31-09

BORDER LAST REVISED 4/11/2008
RELATIVE BORDER SCALE IS IN INCHES 0 1 2 3
USERNAME => trmikesl
DGN FILE => 4447Ouia034.dgn
CU 04236
EA 4470U1

Dist	COUNTY	ROUTE	POST MILES TOTAL PROJECT	SHEET No.	TOTAL SHEETS
04	CC	680	0.0/R12.8	137	504

Han-Bin Liang 06/22/09
REGISTERED CIVIL ENGINEER DATE

REGISTERED PROFESSIONAL ENGINEER
HAN-BIN LIANG
No. C 48404
Exp. 6/30/10
CIVIL
STATE OF CALIFORNIA

2-1-10
PLANS APPROVAL DATE

THE STATE OF CALIFORNIA OR ITS OFFICERS OR AGENTS SHALL NOT BE RESPONSIBLE FOR THE ACCURACY OR COMPLETENESS OF SCANNED COPIES OF THIS PLAN SHEET.

WRECO
1243 ALPINE ROAD
SUITE 108
WALNUT CREEK, CA 94596

CALTRANS
111 GRAND AVENUE
OAKLAND, CA 94612

REVISED BY	DATE REVISED
RP	7/31/09

CALCULATED-DESIGNED BY: RAJA PERIKETI
CHECKED BY: CHRIS SEWELL

CONSULTANT FUNCTIONAL SUPERVISOR: HAN-BIN LIANG

STATE OF CALIFORNIA - DEPARTMENT OF TRANSPORTATION
Caltrans

- FOR ACCURATE RIGHT OF WAY AND ACCESS DATA, CONTACT RIGHT OF WAY ENGINEERING AT THE DISTRICT OFFICE.

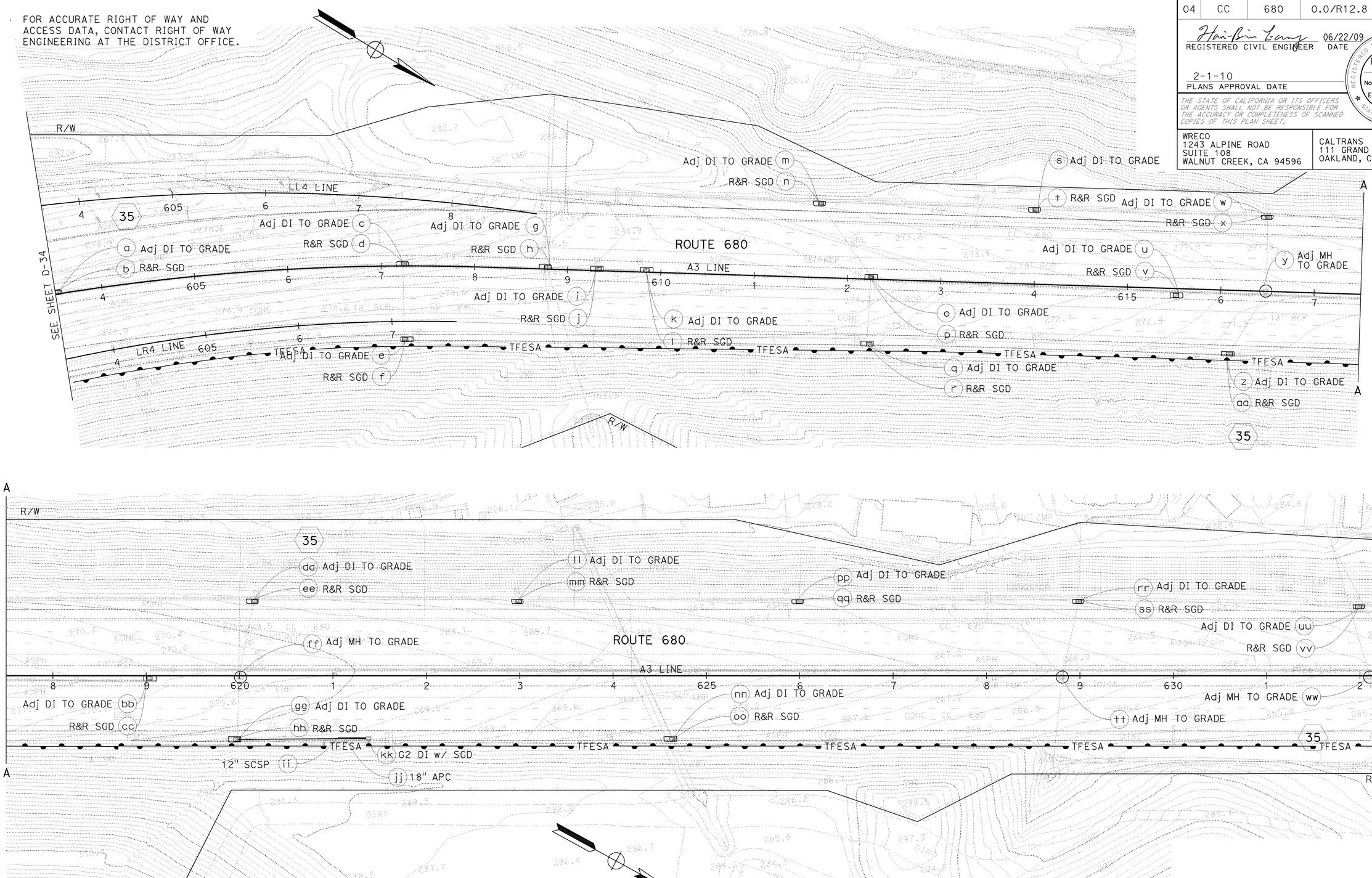

DRAINAGE PLAN

SCALE: 1" = 50'

FOR NOTES, ABBREVIATIONS &/OR LEGEND, SEE SHEET D-1

THIS PLAN ACCURATE FOR DRAINAGE WORK ONLY

D-35

LAST REVISION DATE PLOTTED => 04-FEB-2010
TIME PLOTTED => 09:01
07-31-09

Dist	COUNTY	ROUTE	POST MILES TOTAL PROJECT	SHEET No.	TOTAL SHEETS
04	CC	680	0.0/R12.8	138	504

Han-Bin Liang 06/22/09
REGISTERED CIVIL ENGINEER DATE

REGISTERED PROFESSIONAL ENGINEER
HAN-BIN LIANG
No. C 48404
Exp. 6/30/10
CIVIL
STATE OF CALIFORNIA

2-1-10
PLANS APPROVAL DATE

THE STATE OF CALIFORNIA OR ITS OFFICERS OR AGENTS SHALL NOT BE RESPONSIBLE FOR THE ACCURACY OR COMPLETENESS OF SCANNED COPIES OF THIS PLAN SHEET.

WRECO
1243 ALPINE ROAD
SUITE 108
WALNUT CREEK, CA 94596

CALTRANS
111 GRAND AVENUE
OAKLAND, CA 94612

- FOR ACCURATE RIGHT OF WAY AND ACCESS DATA, CONTACT RIGHT OF WAY ENGINEERING AT THE DISTRICT OFFICE.

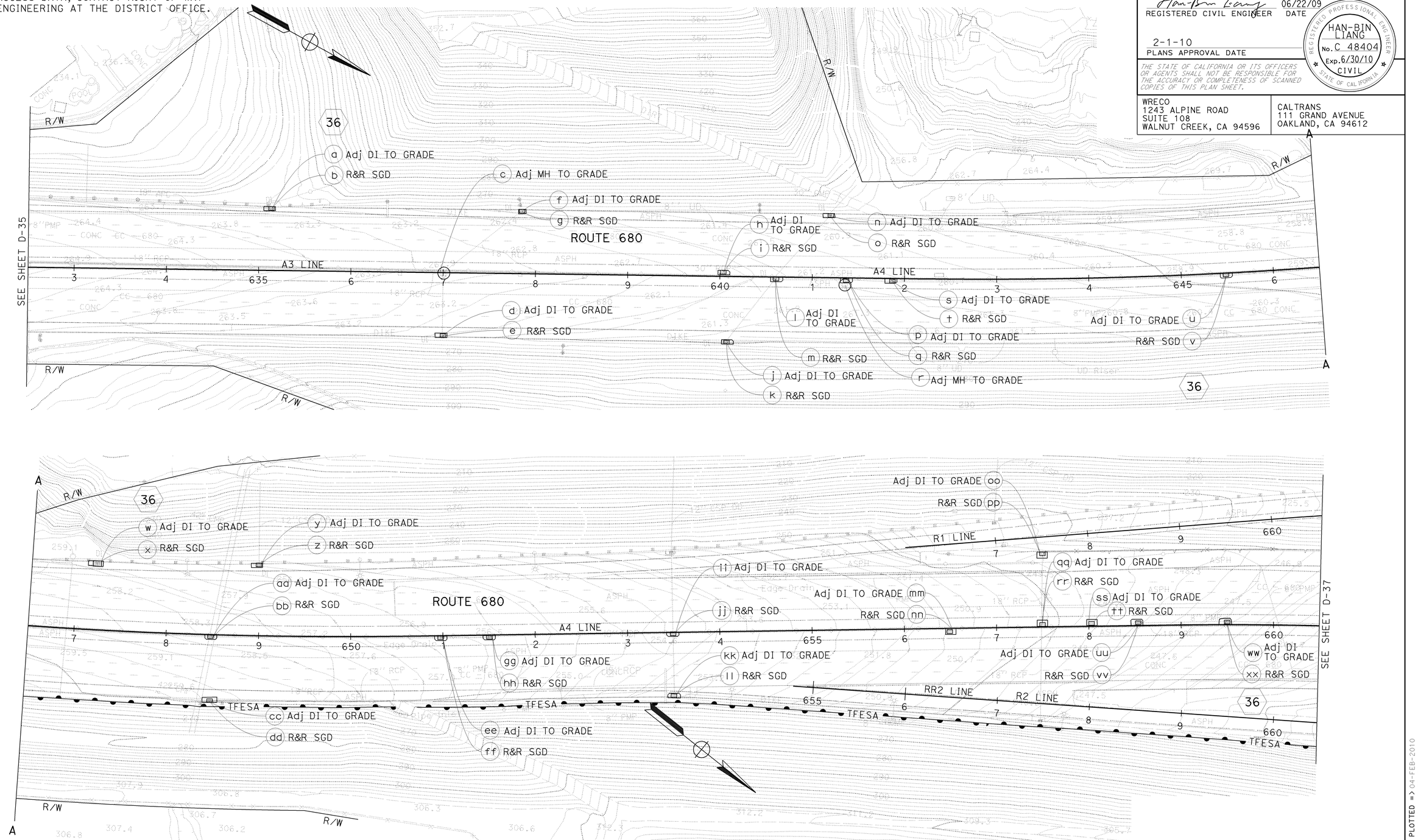

FOR NOTES, ABBREVIATIONS &/OR LEGEND, SEE SHEET D-1

THIS PLAN ACCURATE FOR DRAINAGE WORK ONLY

DRAINAGE PLAN

SCALE: 1" = 50'

D-36

STATE OF CALIFORNIA - DEPARTMENT OF TRANSPORTATION
Caltrans

CONSULTANT FUNCTIONAL SUPERVISOR: HAN-BIN LIANG

CALCULATED-DESIGNED BY	CHECKED BY	REVISED BY	DATE REVISED
RAJA PERIKETI	CHRIS SEWELL	RP	7/31/09

LAST REVISION DATE PLOTTED => 04-FEB-2010
TIME PLOTTED => 09:01
07-31-09

BORDER LAST REVISED 4/11/2008

RELATIVE BORDER SCALE IS IN INCHES 0 1 2 3

USERNAME => trmikesl
DGN FILE => 4447Uuia036.dgn

CU 04236

EA 4470U1

Dist	COUNTY	ROUTE	POST MILES TOTAL PROJECT	SHEET No.	TOTAL SHEETS
04	CC	680	0.0/R12.8	139	504

Han-Bin Liang 06/22/09
REGISTERED CIVIL ENGINEER DATE

HAN-BIN LIANG No. C 48404 Exp.6/30/10 CIVIL — REGISTERED PROFESSIONAL ENGINEER — STATE OF CALIFORNIA

2-1-10
PLANS APPROVAL DATE

THE STATE OF CALIFORNIA OR ITS OFFICERS OR AGENTS SHALL NOT BE RESPONSIBLE FOR THE ACCURACY OR COMPLETENESS OF SCANNED COPIES OF THIS PLAN SHEET.

WRECO
1243 ALPINE ROAD
SUITE 108
WALNUT CREEK, CA 94596

CALTRANS
111 GRAND AVENUE
OAKLAND, CA 94612

· FOR ACCURATE RIGHT OF WAY AND ACCESS DATA, CONTACT RIGHT OF WAY ENGINEERING AT THE DISTRICT OFFICE.

DRAINAGE PLAN

SCALE: 1" = 50'

D-37

FOR NOTES, ABBREVIATIONS &/OR LEGEND, SEE SHEET D-1

THIS PLAN ACCURATE FOR DRAINAGE WORK ONLY

STATE OF CALIFORNIA - DEPARTMENT OF TRANSPORTATION
Caltrans

CONSULTANT FUNCTIONAL SUPERVISOR: HAN-BIN LIANG
CALCULATED-DESIGNED BY:
CHECKED BY: CHRIS SEWELL
REVISED BY: RP
DATE REVISED: 7/31/09

LAST REVISION DATE PLOTTED => 04-FEB-2010
07-31-09 TIME PLOTTED => 09:01

BORDER LAST REVISED 4/11/2008

RELATIVE BORDER SCALE IS IN INCHES 0 1 2 3

USERNAME => trmikesl
DGN FILE => 44470uia037.dgn

CU 04236

EA 4470U1

Dist	COUNTY	ROUTE	POST MILES TOTAL PROJECT	SHEET No.	TOTAL SHEETS
04	CC	680	0.0/R12.8	140	504

Han-Bin Liang 06/22/09
REGISTERED CIVIL ENGINEER DATE

REGISTERED PROFESSIONAL ENGINEER
HAN-BIN LIANG
No. C 48404
Exp. 6/30/10
CIVIL
STATE OF CALIFORNIA

2-1-10
PLANS APPROVAL DATE

THE STATE OF CALIFORNIA OR ITS OFFICERS OR AGENTS SHALL NOT BE RESPONSIBLE FOR THE ACCURACY OR COMPLETENESS OF SCANNED COPIES OF THIS PLAN SHEET.

WRECO
1243 ALPINE ROAD
SUITE 108
WALNUT CREEK, CA 94596

CALTRANS
111 GRAND AVENUE
OAKLAND, CA 94612

· FOR ACCURATE RIGHT OF WAY AND ACCESS DATA, CONTACT RIGHT OF WAY ENGINEERING AT THE DISTRICT OFFICE.

NO DRAINAGE WORK ON THIS SHEET

DRAINAGE PLAN

SCALE: 1" = 50'

D-38

FOR NOTES, ABBREVIATIONS &/OR LEGEND, SEE SHEET D-1

STATE OF CALIFORNIA - DEPARTMENT OF TRANSPORTATION
Caltrans

CONSULTANT FUNCTIONAL SUPERVISOR: HAN-BIN LIANG
CALCULATED-DESIGNED BY:
CHECKED BY:
RAJA PERIKETI
CHRIS SEWELL
REVISED BY: RP
DATE REVISED: 7/31/09

LAST REVISION
DATE PLOTTED => 04-FEB-2010
TIME PLOTTED => 09:01
07-31-09

BORDER LAST REVISED 4/11/2008
RELATIVE BORDER SCALE IS IN INCHES 0 1 2 3
USERNAME => trmikesl
DGN FILE => 44470uia038.dgn
CU 04236
EA 4470U1

Dist	COUNTY	ROUTE	POST MILES TOTAL PROJECT	SHEET No.	TOTAL SHEETS
04	CC	680	0.0/R12.8	141	504

REGISTERED CIVIL ENGINEER 06/22/09 DATE

2-1-10
PLANS APPROVAL DATE

REGISTERED PROFESSIONAL ENGINEER HAN-BIN LIANG No. C 48404 Exp. 6/30/10 CIVIL STATE OF CALIFORNIA

THE STATE OF CALIFORNIA OR ITS OFFICERS OR AGENTS SHALL NOT BE RESPONSIBLE FOR THE ACCURACY OR COMPLETENESS OF SCANNED COPIES OF THIS PLAN SHEET.

WRECO
1243 ALPINE ROAD
SUITE 108
WALNUT CREEK, CA 94596

CALTRANS
111 GRAND AVENUE
OAKLAND, CA 94612

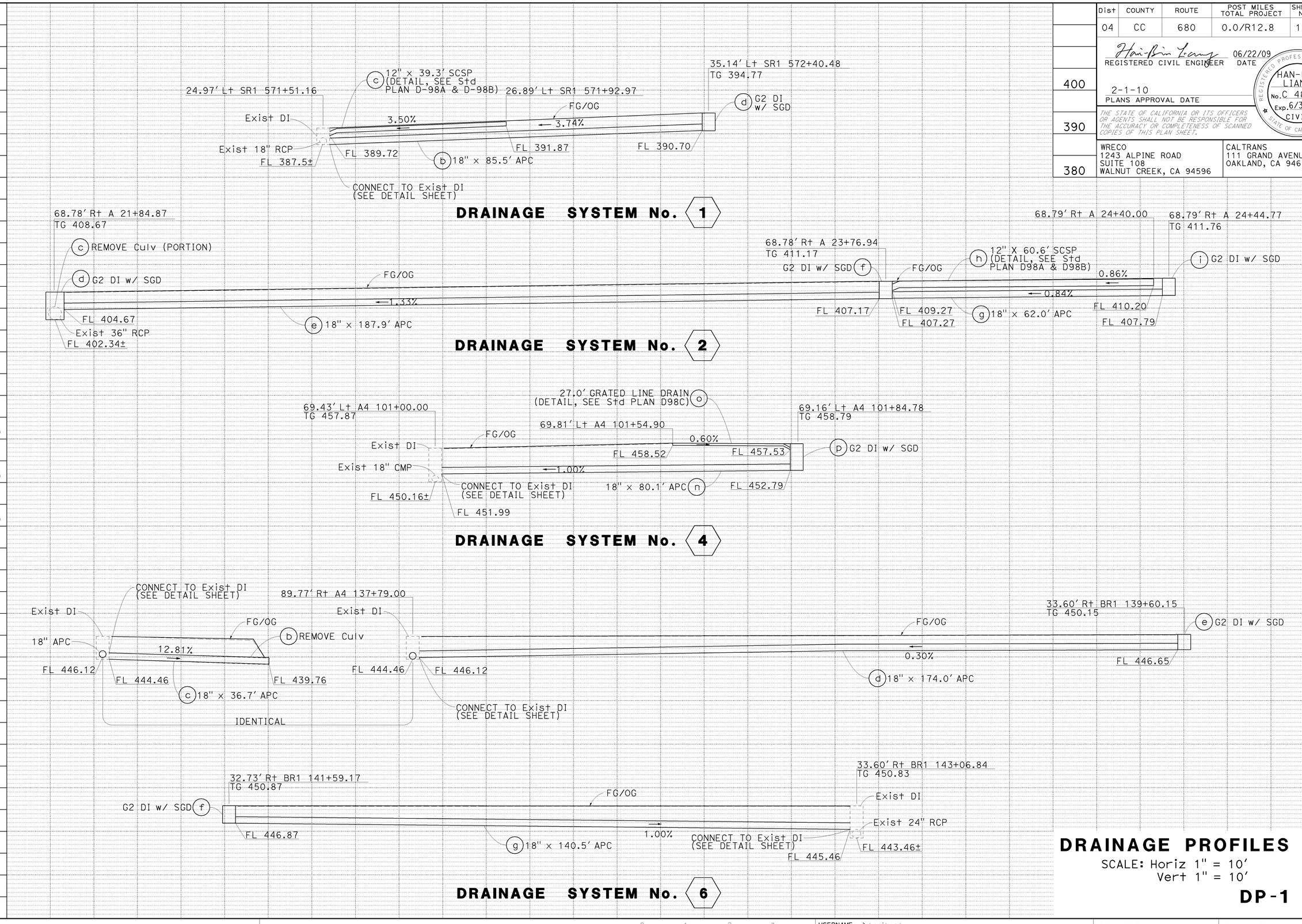

DRAINAGE PROFILES

SCALE: Horiz 1" = 10'
Vert 1" = 10'

DP-1

STATE OF CALIFORNIA - DEPARTMENT OF TRANSPORTATION
Caltrans

CONSULTANT FUNCTIONAL SUPERVISOR: HAN-BIN LIANG
CALCULATED-DESIGNED BY: CHRIS SEWELL
CHECKED BY: RAJA PERIKETI
REVISED BY: RP
DATE REVISED: 07/31/09
CS 11/25/09

LAST REVISION 10-16-09
DATE PLOTTED => 04-FEB-2010
TIME PLOTTED => 10:35

Dist	COUNTY	ROUTE	POST MILES TOTAL PROJECT	SHEET No.	TOTAL SHEETS
04	CC	680	0.0/R12.8	142	504

Han-Bin Liang 06/22/09
REGISTERED CIVIL ENGINEER DATE

HAN-BIN LIANG No. C 48404 Exp. 6/30/10 CIVIL — REGISTERED PROFESSIONAL ENGINEER — STATE OF CALIFORNIA

2-1-10
PLANS APPROVAL DATE

THE STATE OF CALIFORNIA OR ITS OFFICERS OR AGENTS SHALL NOT BE RESPONSIBLE FOR THE ACCURACY OR COMPLETENESS OF SCANNED COPIES OF THIS PLAN SHEET.

WRECO
1243 ALPINE ROAD
SUITE 108
WALNUT CREEK, CA 94596

CALTRANS
111 GRAND AVENUE
OAKLAND, CA 94612

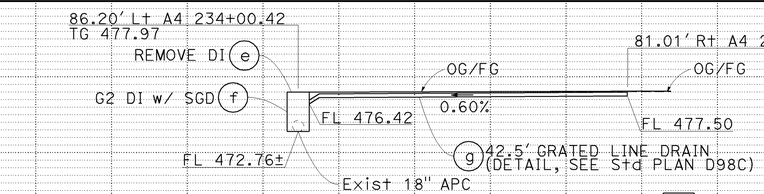

DRAINAGE SYSTEM No. 12

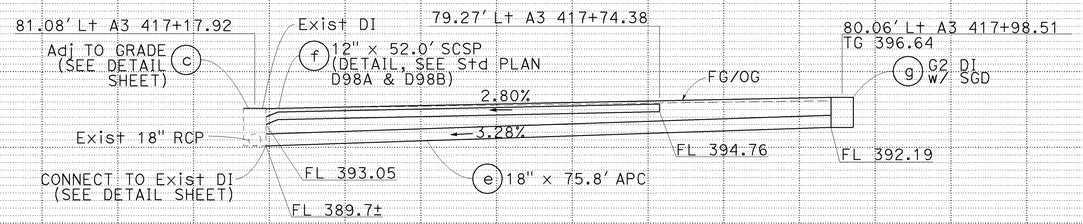

DRAINAGE SYSTEM No. 23

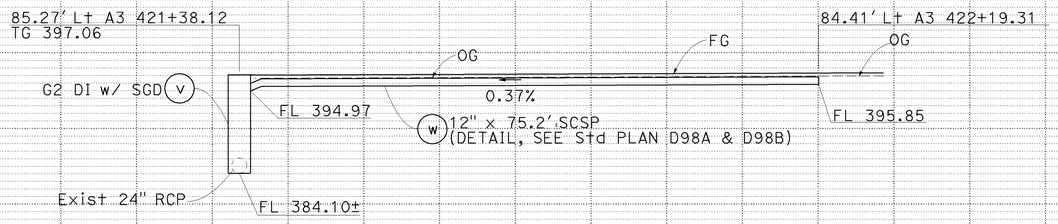

DRAINAGE SYSTEM No. 23

DRAINAGE SYSTEM No. 24

DRAINAGE PROFILES

SCALE: Horiz 1" = 10'
Vert 1" = 10'

DP-2

REVISED BY	DATE REVISED
RP	07/31/09
CS	11/25/09

CALCULATED-DESIGNED BY: RAJA PERIKETI
CHECKED BY: CHRIS SEWELL
CONSULTANT FUNCTIONAL SUPERVISOR: HAN-BIN LIANG
STATE OF CALIFORNIA - DEPARTMENT OF TRANSPORTATION

LAST REVISION | DATE PLOTTED => 04-FEB-2010
11-25-09 | TIME PLOTTED => 10:35

BORDER LAST REVISED 4/11/2008 | RELATIVE BORDER SCALE IS IN INCHES 0 1 2 3 | USERNAME => trmikesl | DGN FILE => 4447ouib002.dgn | CU 04236 | EA 4470U1

Dist	COUNTY	ROUTE	POST MILES TOTAL PROJECT	SHEET No.	TOTAL SHEETS
04	CC	680	0.0/R12.8	143	504

Han-Bin Liang 06/22/09
REGISTERED CIVIL ENGINEER DATE

2-1-10
PLANS APPROVAL DATE

REGISTERED PROFESSIONAL ENGINEER
HAN-BIN LIANG
No. C 48404
Exp. 6/30/10
CIVIL
STATE OF CALIFORNIA

THE STATE OF CALIFORNIA OR ITS OFFICERS OR AGENTS SHALL NOT BE RESPONSIBLE FOR THE ACCURACY OR COMPLETENESS OF SCANNED COPIES OF THIS PLAN SHEET.

WRECO
1243 ALPINE ROAD
SUITE 108
WALNUT CREEK, CA 94596

CALTRANS
111 GRAND AVENUE
OAKLAND, CA 94612

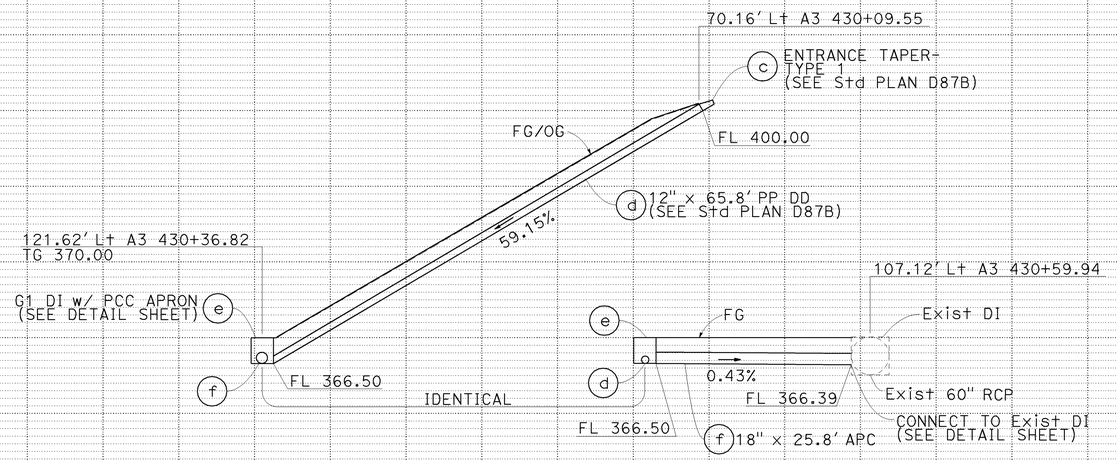

DRAINAGE SYSTEM No 24

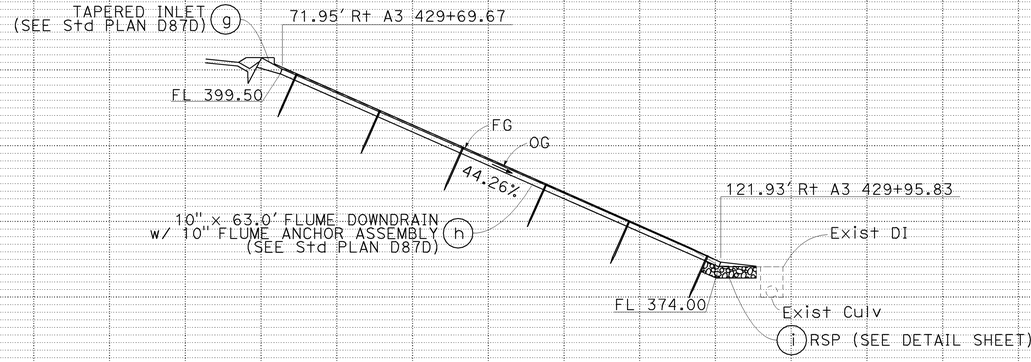

DRAINAGE SYSTEM No. 26

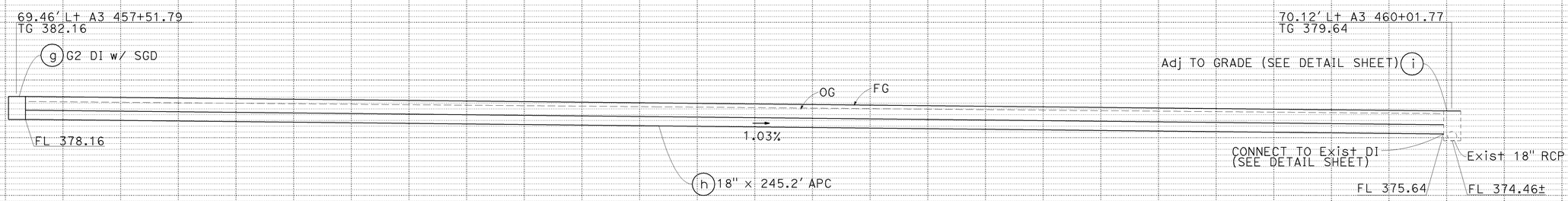

DRAINAGE PROFILES

SCALE: Horiz 1" = 10'
Vert 1" = 10'

DP-3

STATE OF CALIFORNIA - DEPARTMENT OF TRANSPORTATION
Caltrans

CONSULTANT FUNCTIONAL SUPERVISOR: HAN-BIN LIANG

CALCULATED-DESIGNED BY: RAJA PERIKETI
CHECKED BY: CHRIS SEWELL

REVISED BY	DATE REVISED
RP	07/31/09
CS	11/25/09

LAST REVISION | DATE PLOTTED => 04-FEB-2010
11-25-09 | TIME PLOTTED => 10:35

BORDER LAST REVISED 4/11/2008

RELATIVE BORDER SCALE IS IN INCHES 0 1 2 3

USERNAME => trmikesl
DGN FILE => 4447Ouib003.dgn

CU 04236

EA 4470U1

Dist	COUNTY	ROUTE	POST MILES TOTAL PROJECT	SHEET No.	TOTAL SHEETS
04	CC	680	0.0/R12.8	144	504

REGISTERED CIVIL ENGINEER 06/22/09 DATE

2-1-10
PLANS APPROVAL DATE

REGISTERED PROFESSIONAL ENGINEER HAN-BIN LIANG No. C 48404 Exp. 6/30/10 CIVIL STATE OF CALIFORNIA

THE STATE OF CALIFORNIA OR ITS OFFICERS OR AGENTS SHALL NOT BE RESPONSIBLE FOR THE ACCURACY OR COMPLETENESS OF SCANNED COPIES OF THIS PLAN SHEET.

WRECO
1243 ALPINE ROAD
SUITE 108
WALNUT CREEK, CA 94596

CALTRANS
111 GRAND AVENUE
OAKLAND, CA 94612

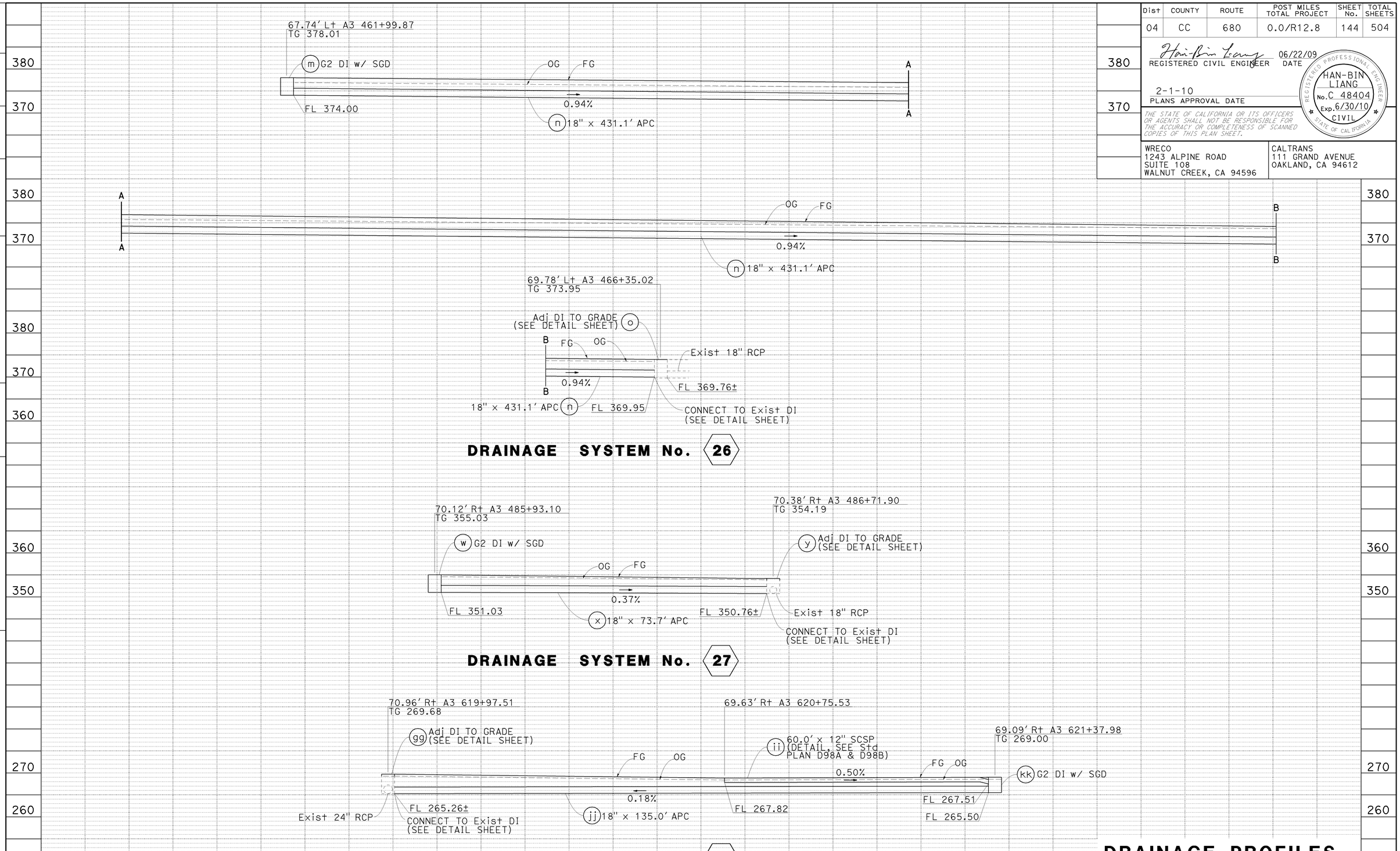

DRAINAGE PROFILES

SCALE: Horiz 1" = 10'
Vert 1" = 10'

DP-4

STATE OF CALIFORNIA - DEPARTMENT OF TRANSPORTATION
Caltrans

CONSULTANT FUNCTIONAL SUPERVISOR: HAN-BIN LIANG
CALCULATED-DESIGNED BY: RAJA PERIKETI
CHECKED BY: CHRIS SEWELL
REVISED BY: RP
DATE REVISED: 07/31/09
CS 10/26/09

LAST REVISION 10-16-09
DATE PLOTTED => 04-FEB-2010
TIME PLOTTED => 10:41

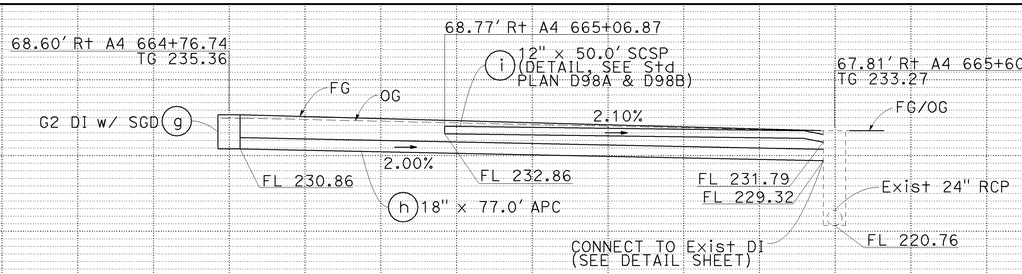

DRAINAGE SYSTEM No. 37

Dist	COUNTY	ROUTE	POST MILES TOTAL PROJECT	SHEET No.	TOTAL SHEETS
04	CC	680	0.0/R12.8	145	504

Han-Bin Liang 06/22/09
REGISTERED CIVIL ENGINEER DATE

HAN-BIN LIANG
No. C 48404
Exp. 6/30/10
CIVIL
REGISTERED PROFESSIONAL ENGINEER
STATE OF CALIFORNIA

2-1-10
PLANS APPROVAL DATE

THE STATE OF CALIFORNIA OR ITS OFFICERS OR AGENTS SHALL NOT BE RESPONSIBLE FOR THE ACCURACY OR COMPLETENESS OF SCANNED COPIES OF THIS PLAN SHEET.

WRECO
1243 ALPINE ROAD
SUITE 108
WALNUT CREEK, CA 94596

CALTRANS
111 GRAND AVENUE
OAKLAND, CA 94612

DRAINAGE PROFILES

SCALE: Horiz 1" = 10'
Vert 1" = 10'

DP-5

REVISED BY: CS | DATE REVISED: 11/25/09
REVISED BY: RP | DATE REVISED: 07/31/09
CALCULATED-DESIGNED BY: RAJA PERIKETI
CHECKED BY: CHRIS SEWELL
CONSULTANT FUNCTIONAL SUPERVISOR: HAN-BIN LIANG
STATE OF CALIFORNIA - DEPARTMENT OF TRANSPORTATION
Caltrans

LAST REVISION | DATE PLOTTED => 04-FEB-2010
11-25-09 | TIME PLOTTED => 10:41

BORDER LAST REVISED 4/11/2008
RELATIVE BORDER SCALE IS IN INCHES 0 1 2 3
USERNAME => trmikesl
DGN FILE => 44470uib005.dgn
CU 04236
EA 4470U1

Dist	COUNTY	ROUTE	POST MILES TOTAL PROJECT	SHEET No.	TOTAL SHEETS
04	CC	680	0.0/R12.8	146	504

Han-Bin Liang 06/22/09
REGISTERED CIVIL ENGINEER DATE

REGISTERED PROFESSIONAL ENGINEER
HAN-BIN LIANG
No. C 48404
Exp. 6/30/10
CIVIL
STATE OF CALIFORNIA

2-1-10
PLANS APPROVAL DATE

THE STATE OF CALIFORNIA OR ITS OFFICERS OR AGENTS SHALL NOT BE RESPONSIBLE FOR THE ACCURACY OR COMPLETENESS OF SCANNED COPIES OF THIS PLAN SHEET.

WRECO
1243 ALPINE ROAD
SUITE 108
WALNUT CREEK, CA 94596

CALTRANS
111 GRAND AVENUE
OAKLAND, CA 94612

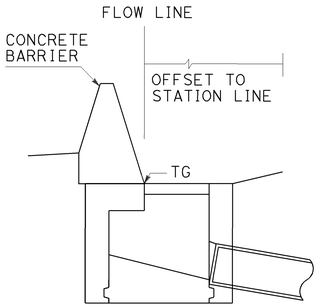

SECTION C-C

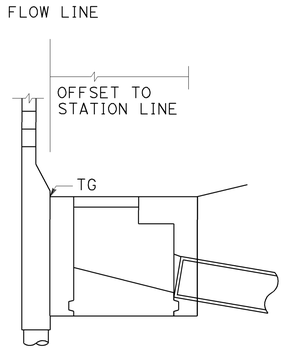

SECTION A-A

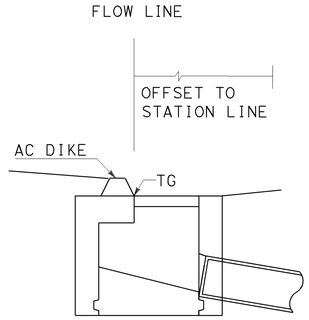

SECTION B-B

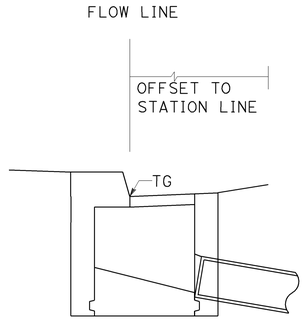

ELEVATION

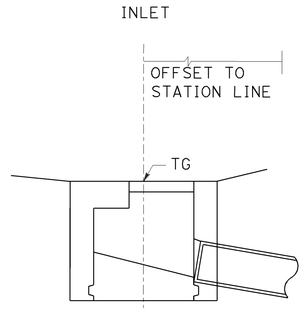

ELEVATION

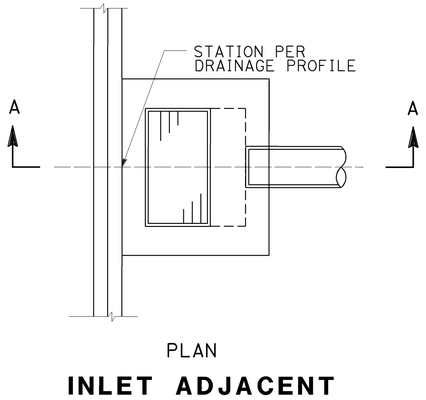

PLAN

INLET ADJACENT TO SOUNDWALL

(SECTION A-A)

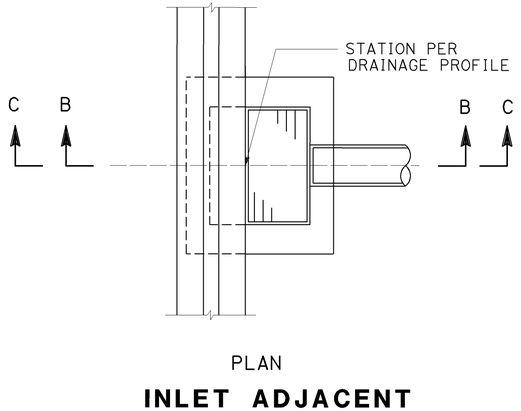

PLAN

INLET ADJACENT TO AC DIKE (SECTION B-B)
OR CONCRETE BARRIER (SECTION C-C)

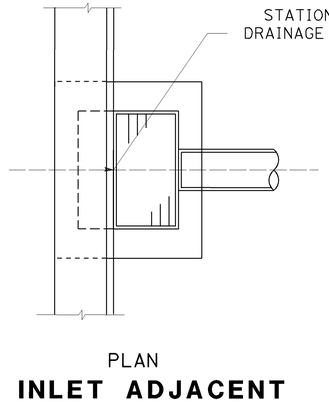

PLAN

INLET ADJACENT TO CURB

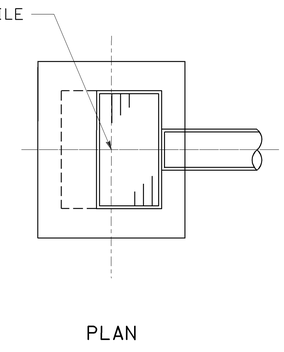

PLAN

FIELD INLET

DRAINAGE DETAILS

NO SCALE

DD-1

STATE OF CALIFORNIA - DEPARTMENT OF TRANSPORTATION
Caltrans

REVISED BY	DATE REVISED
RP	7/31/09

CALCULATED-DESIGNED BY: RAJA PERIKETI
CHECKED BY: CHRIS SEWELL
CONSULTANT FUNCTIONAL SUPERVISOR: HAN-BIN LIANG

LAST REVISION | DATE PLOTTED => 04-FEB-2010
07-31-09 | TIME PLOTTED => 14:09

Dist	COUNTY	ROUTE	POST MILES TOTAL PROJECT	SHEET No.	TOTAL SHEETS
04	CC	680	0.0/R12.8	147	504

Han-Bin Liang 06/22/09
REGISTERED CIVIL ENGINEER DATE

2-1-10
PLANS APPROVAL DATE

REGISTERED PROFESSIONAL ENGINEER
HAN-BIN LIANG
No. C 48404
Exp. 6/30/10
CIVIL
STATE OF CALIFORNIA

THE STATE OF CALIFORNIA OR ITS OFFICERS OR AGENTS SHALL NOT BE RESPONSIBLE FOR THE ACCURACY OR COMPLETENESS OF SCANNED COPIES OF THIS PLAN SHEET.

WRECO
1243 ALPINE ROAD
SUITE 108
WALNUT CREEK, CA 94596

CALTRANS
111 GRAND AVENUE
OAKLAND, CA 94612

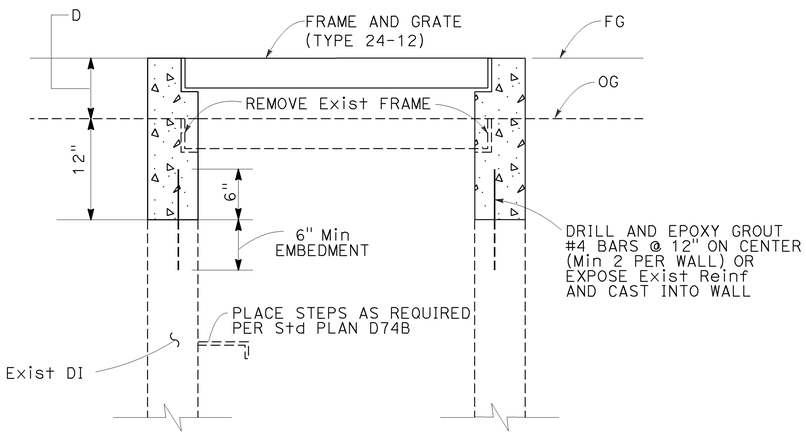

SECTIONAL VIEW

ADJUST DRAINAGE INLET

NOTES

1. FOR DETAILS NOT SHOWN FOR INLETS AND GRATE TYPE, SEE Std PLANS D73 AND D77-A.
2. FOR DETAILS OF GUTTER DEPRESSION, SEE Std PLAN D78.
3. REMOVE 12" Min OF EXISTING WALL FOR SPLICING, ON ALL ADJUST INLETS.

* TOP OF GRATE ELEVATIONS TO BE VERIFIED IN FIELD.

ADJUST DRAINAGE INLET

DRAINAGE UNIT	D, HEIGHT OF ADJUSTMENT (ft)	PROPOSED TG ELEVATION (ft)
21 a	0.45	389.75*
21 c	0.45	391.45*
22 a	0.45	392.18
22 c	0.45	390.85*
22 e	0.45	392.90
22 g	0.45	394.22
22 i	0.45	393.70*
22 k	0.45	395.31
23 a	0.45	396.61
23 c	0.45	395.45 *
23 h	0.45	397.50
23 j	0.45	397.90
23 l	0.45	396.95*
23 n	0.45	398.31
23 p	0.45	396.97
23 r	0.45	397.19
23 t	0.45	398.63
24 j	0.45	400.37*
24 o	0.45	401.93
24 q	0.45	400.70*
25 a	0.45	400.51
25 c	0.45	398.79
25 e	0.45	394.30
25 g	0.45	395.32
25 i	0.45	394.85
25 k	0.45	393.32
25 m	0.45	387.91

DRAINAGE UNIT	D, HEIGHT OF ADJUSTMENT (ft)	PROPOSED TG ELEVATION (ft)
25 o	0.45	389.95
26 a	0.45	384.24*
26 c	0.45	385.88
26 e	0.45	383.97
26 i	0.45	379.64
26 k	0.45	379.60
26 q	0.45	373.95*
26 o	0.45	373.02
26 s	0.45	374.18
27 a	0.45	369.22
27 c	0.45	368.66
27 g	0.45	365.26
27 e	0.45	367.12*
27 i	0.45	359.73
27 k	0.45	360.99
27 m	0.45	359.42
27 o	0.45	355.32
27 q	0.45	357.06
27 s	0.45	354.74
27 u	0.45	355.66
27 y	0.45	354.20
27 aa	0.45	350.69
27 cc	0.45	350.11
27 ee	0.45	349.90
27 gg	0.45	349.77
27 ii	0.45	349.83
27 kk	0.45	349.65
27 mm	0.45	348.95

DRAINAGE UNIT	D, HEIGHT OF ADJUSTMENT (ft)	PROPOSED TG ELEVATION (ft)
27 oo	0.45	347.15
27 qq	0.45	347.20*
28 a	0.45	345.24*
28 c	0.45	342.90
28 f	0.45	341.28
28 h	0.45	340.09
28 j	0.45	340.49
28 l	0.45	339.90
28 n	0.45	337.20*
28 p	0.45	336.45
28 r	0.45	335.71
28 t	0.45	335.07
28 v	0.45	333.66
28 x	0.45	327.50
28 z	0.45	329.07
28 bb	0.45	324.27
28 dd	0.45	322.38
28 ff	0.45	319.31
28 hh	0.45	319.35
28 jj	0.45	319.64
28 ll	0.45	319.03
29 a	0.45	317.01
29 d	0.45	313.69
29 g	0.45	312.15
29 i	0.45	310.52
29 k	0.45	307.06
29 m	0.45	308.33
30 a	0.45	305.82

DRAINAGE UNIT	D, HEIGHT OF ADJUSTMENT (ft)	PROPOSED TG ELEVATION (ft)
30 c	0.45	303.30
30 e	0.45	302.21
30 g	0.45	302.24
31 a	0.45	301.68
31 c	0.45	298.14
31 e	0.45	297.73
32 a	0.45	295.90
32 c	0.45	295.35*
32 e	0.45	297.13
32 g	0.45	296.34
32 i	0.45	295.63
32 k	0.45	290.55*
32 m	0.45	294.41
32 o	0.45	291.60*
32 q	0.45	296.95*
32 s	0.45	293.40
32 u	0.45	292.34
32 w	0.45	290.85*
32 y	0.45	289.99*
32 aa	0.45	292.49
32 cc	0.45	290.64
32 ff	0.45	289.45*
32 hh	0.45	290.71
33 b	0.45	287.75*
33 d	0.45	288.99
33 g	0.45	286.70
33 i	0.45	286.43
33 k	0.45	285.76
33 m	0.45	284.13
33 o	0.45	283.95*
34 a	0.45	279.60*
34 c	0.45	283.13
34 e	0.45	286.95*
34 g	0.45	281.89
34 i	0.45	282.03
34 k	0.45	249.95*
34 m	0.45	281.66*
34 o	0.45	280.77
34 q	0.45	278.59
34 s	0.45	278.70*
34 u	0.45	279.64
34 w	0.45	279.49
34 y	0.45	279.17
34 aa	0.45	278.34
35 a	0.45	277.81
35 c	0.45	276.05
35 e	0.45	273.14
35 g	0.45	275.36
35 i	0.45	275.26
35 k	0.45	275.37
35 m	0.45	273.17
35 o	0.45	274.43
35 q	0.45	273.55
35 s	0.45	272.12
35 u	0.45	272.95*
35 w	0.45	271.01
35 z	0.45	271.73
35 bb	0.45	271.55*
35 dd	0.45	269.07
35 gg	0.45	269.69
35 ll	0.45	268.17
35 nn	0.45	267.86
35 pp	0.45	267.17
35 rr	0.45	265.75

DRAINAGE UNIT	D, HEIGHT OF ADJUSTMENT (ft)	PROPOSED TG ELEVATION (ft)
35 uu	0.45	264.66
36 a	0.45	263.46
36 d	0.45	262.63
36 f	0.45	262.05
36 h	0.45	262.68
36 j	0.45	261.21
36 l	0.45	262.28
36 n	0.45	260.30
36 p	0.45	261.91*
36 s	0.45	261.68
36 u	0.45	260.45*
36 w	0.45	258.03
36 y	0.45	256.76
36 aa	0.45	258.49
36 cc	0.45	259.70
36 ee	0.45	257.02
36 gg	0.45	256.65
36 ii	0.45	254.97
36 kk	0.45	263.45
36 mm	0.45	251.42*
36 oo	0.45	297.62
36 qq	0.45	250.45*
36 ss	0.45	249.70*
36 uu	0.45	248.82
36 ww	0.45	247.41
37 a	0.45	244.31
37 c	0.45	242.46
37 e	0.45	240.45*

DRAINAGE DETAILS

NO SCALE

DD-2

REVISED BY	DATE REVISED
RP	7/31/09

CALCULATED-DESIGNED BY: RAJA PERIKETI
CHECKED BY: CHRIS SEWELL
CONSULTANT FUNCTIONAL SUPERVISOR: HAN-BIN LIANG
STATE OF CALIFORNIA - DEPARTMENT OF TRANSPORTATION
Caltrans

LAST REVISION 07-31-09
DATE PLOTTED => 04-FEB-2010
TIME PLOTTED => 14:09

BORDER LAST REVISED 4/11/2008
RELATIVE BORDER SCALE IS IN INCHES 0 1 2 3
USERNAME => trpierce
DGN FILE => 44470uic002.dgn
CU 04609
EA 4470U1

Dist	COUNTY	ROUTE	POST MILES TOTAL PROJECT	SHEET No.	TOTAL SHEETS
04	CC	680	0.0/R12.8	148	504

Han-Bin Liang 06/22/09
REGISTERED CIVIL ENGINEER DATE

REGISTERED PROFESSIONAL ENGINEER
HAN-BIN LIANG
No. C 48404
Exp. 6/30/10
CIVIL
STATE OF CALIFORNIA

2-1-10
PLANS APPROVAL DATE

THE STATE OF CALIFORNIA OR ITS OFFICERS OR AGENTS SHALL NOT BE RESPONSIBLE FOR THE ACCURACY OR COMPLETENESS OF SCANNED COPIES OF THIS PLAN SHEET.

WRECO
1243 ALPINE ROAD
SUITE 108
WALNUT CREEK, CA 94596

CALTRANS
111 GRAND AVENUE
OAKLAND, CA 94612

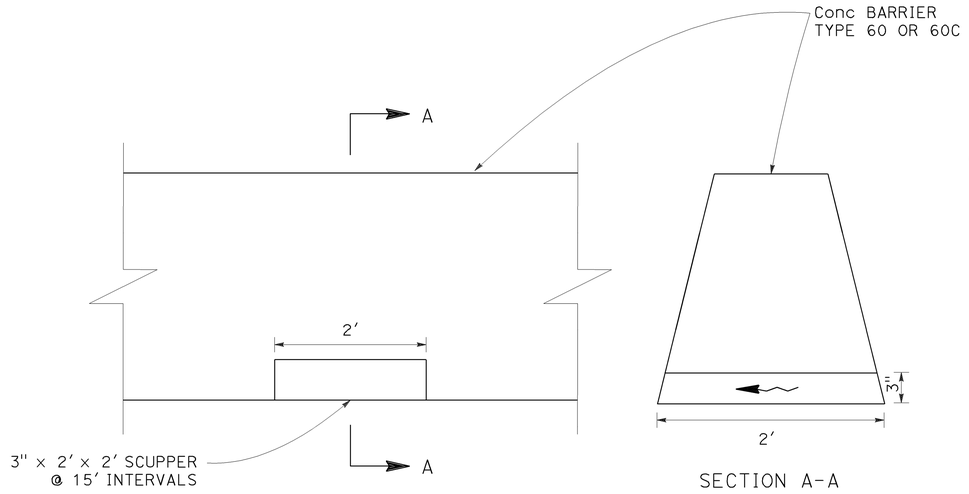

SCUPPER LIMITS:
"A3" 399+09 TO 404+31 (SB)
"A3" 398+60 TO 403+73 (NB)
"A3" 404+70 TP 414+50 (NB)
"A3" 441+76 TO 454+64 (SB)
"A3" 485+54 TO 486+84 (SB)
"A3" 488+27 TO 535+01 (SB)
"GL5" 556+88 TO "A3" 554+08 (SB)
"A3" 552+54 TO 582+00 (SB)
"LL3" 589+50 TO 590+99 (SB)
"A3" 589+50 TO 595+46 (SB)
"A3" 606+83 TO 635+25 (SB)

SCUPPER DRAIN AT CONCRETE BARRIER

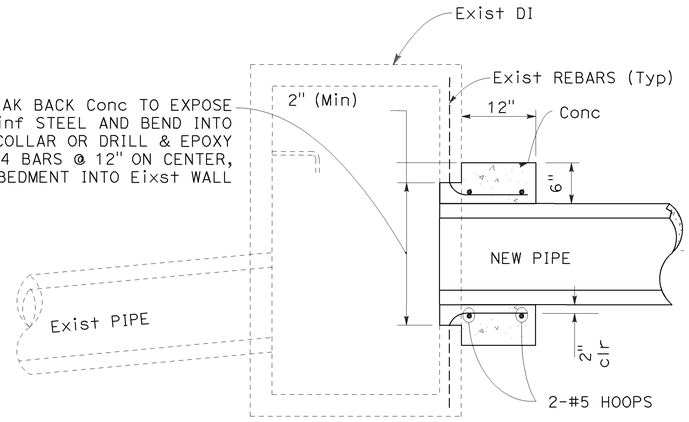

PIPE CONNECT TO EXIST DI

1 b c 4 n 6 c d g 23 e f 24 f l m
26 h n 27 x 35 jj 37 h i

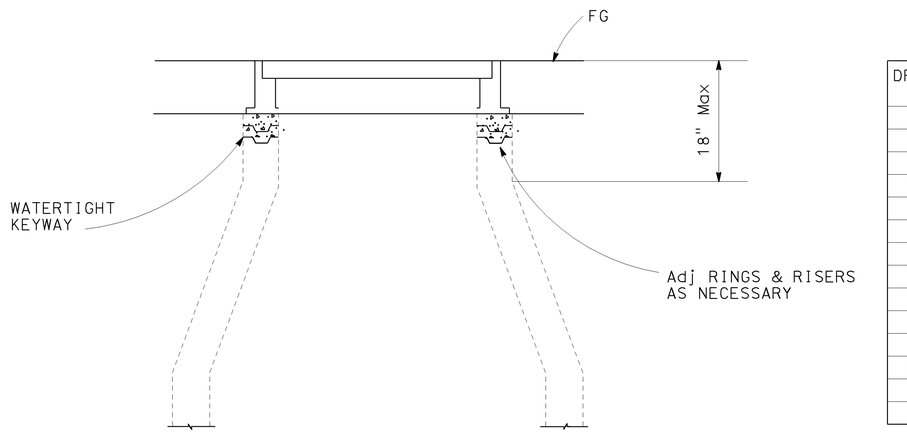

DRAINAGE UNIT	D, HEIGHT OF ADJUSTMENT (ft)	PROPOSED TG ELEVATION (ft)
28 e	0.45±	341.96
29 c	0.45±	316.00
29 f	0.45±	313.41
32 ee	0.45±	292.18*
33 a	0.45±	289.89*
33 f	0.45±	290.27*
34 cc	0.45±	278.55
34 dd	0.45±	278.66
35 y	0.45±	272.62*
35 ff	0.45±	271.20*
35 tt	0.45±	267.49
35 ww	0.45±	266.17
36 c	0.45±	263.70*
36 r	0.45±	261.91*

ADJUST MANHOLE (ADJUST FRAME AND COVER TO GRADE)

NOTE:
* TOP OF COVER ELEVATIONS TO BE VERIFIED IN FIELD.

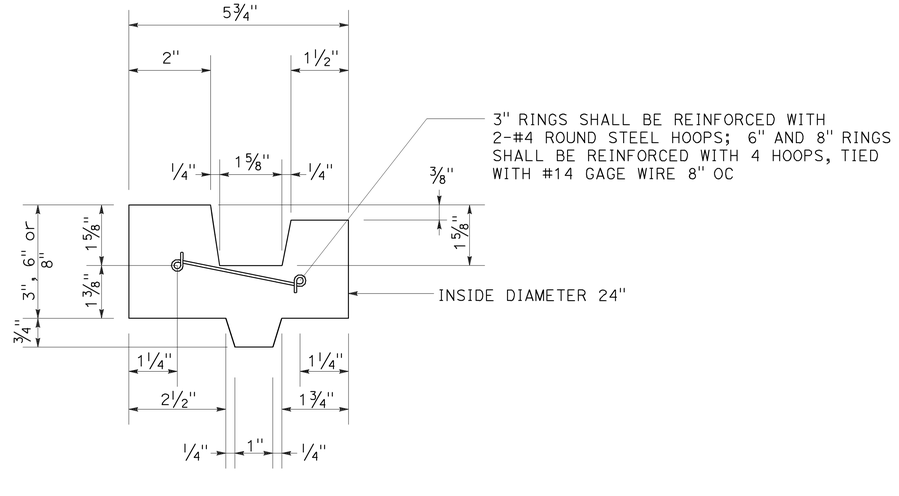

CROSS SECTION OF REINFORCED CONCRETE RING

DRAINAGE DETAILS

NO SCALE

DD-3

STATE OF CALIFORNIA - DEPARTMENT OF TRANSPORTATION
Caltrans
CONSULTANT FUNCTIONAL SUPERVISOR: HAN-BIN LIANG
CALCULATED-DESIGNED BY: RAJA PERIKETI
CHECKED BY: CHRIS SEWELL
REVISED BY: RP
DATE REVISED: 7/31/09
LAST REVISION | DATE PLOTTED => 04-FEB-2010
TIME PLOTTED => 14:09
07-31-09

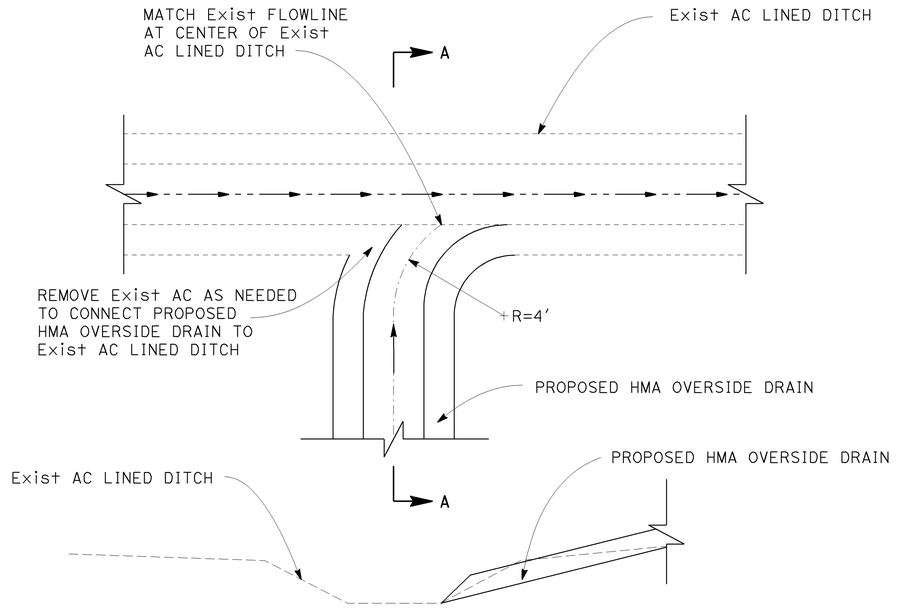

SECTION A-A

HMA OVERSIDE DRAIN CONNECTING TO Exist AC LINE DITCH

24 b

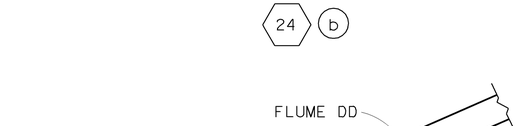

SECTION B-B

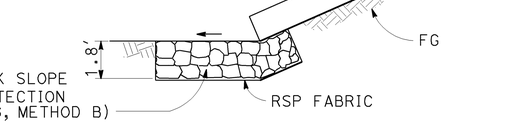

PLAN

RSP PROTECTION DETAILS

24 i

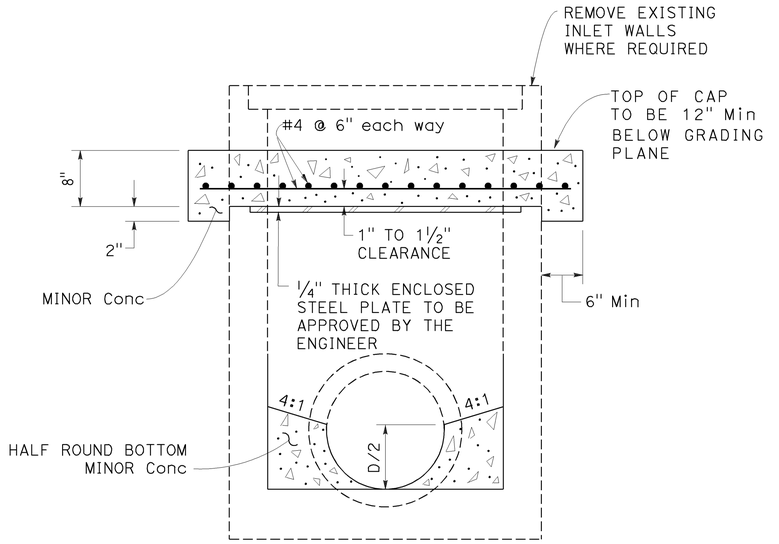

CAP INLET

2 b 4 h 5 e 16 b

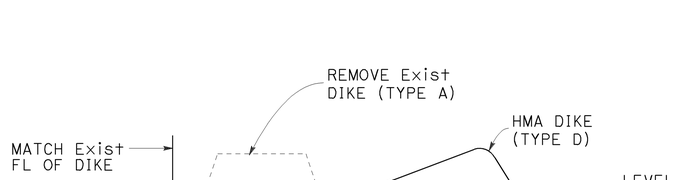

REPLACE DIKE (TYPE A) WITH HMA DIKE (TYPE D)

REPLACE DIKE (TYPE F) WITH HMA DIKE (TYPE E)

NOTES:

1. FOR DETAILS NOT SHOWN SEE Std PLAN A87B
2. FOR LOCATIONS AND QUANTITIES SEE Q SHEETS

Dist	COUNTY	ROUTE	POST MILES TOTAL PROJECT	SHEET No.	TOTAL SHEETS
04	CC	680	0.0/R12.8	149	504

Han-Bin Liang 06/22/09
REGISTERED CIVIL ENGINEER DATE

HAN-BIN LIANG No. C 48404 Exp. 6/30/10 CIVIL — REGISTERED PROFESSIONAL ENGINEER — STATE OF CALIFORNIA

2-1-10
PLANS APPROVAL DATE

THE STATE OF CALIFORNIA OR ITS OFFICERS OR AGENTS SHALL NOT BE RESPONSIBLE FOR THE ACCURACY OR COMPLETENESS OF SCANNED COPIES OF THIS PLAN SHEET.

WRECO
1243 ALPINE ROAD
SUITE 108
WALNUT CREEK, CA 94596

CALTRANS
111 GRAND AVENUE
OAKLAND, CA 94612

DRAINAGE DETAILS

NO SCALE

DD-4

STATE OF CALIFORNIA - DEPARTMENT OF TRANSPORTATION
CONSULTANT FUNCTIONAL SUPERVISOR: HAN-BIN LIANG
CALCULATED-DESIGNED BY: RAJA PERIKETI
CHECKED BY: CHRIS SEWELL
REVISED BY: RP
DATE REVISED: 7/31/09
LAST REVISION: 07-31-09
DATE PLOTTED => 04-FEB-2010
TIME PLOTTED => 14:09

BORDER LAST REVISED 4/11/2008
RELATIVE BORDER SCALE IS IN INCHES 0 1 2 3
USERNAME => trpierce
DGN FILE => 44470uic004.dgn
CU 04609
EA 4470U1

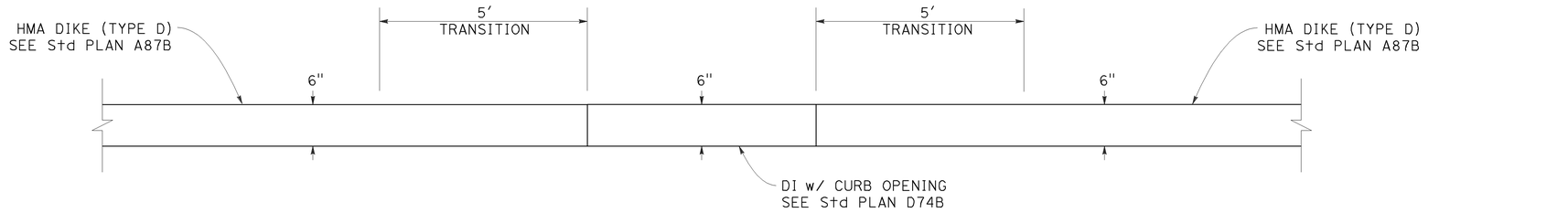

PROFILE

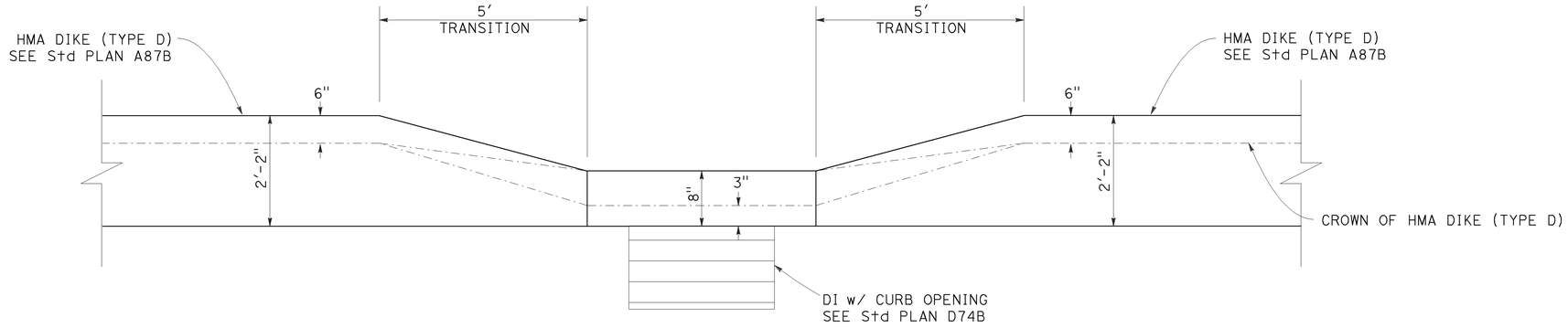

PLAN

HMA DIKE (TYPE D) TRANSITION TO DI WITH CURB OPENING

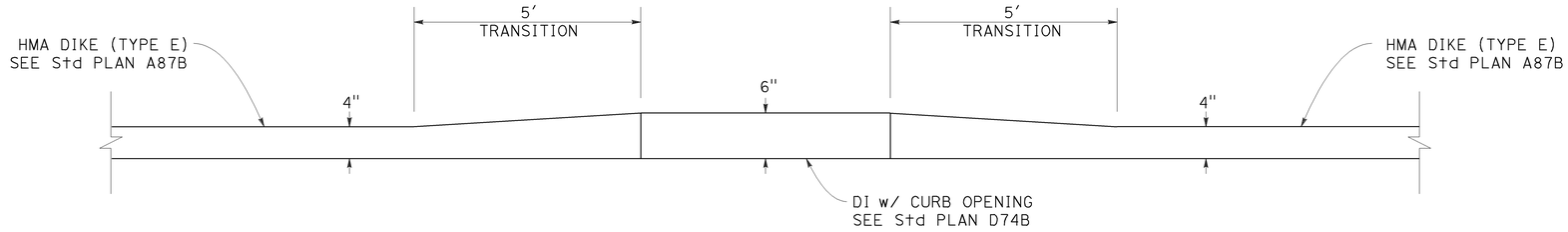

PROFILE

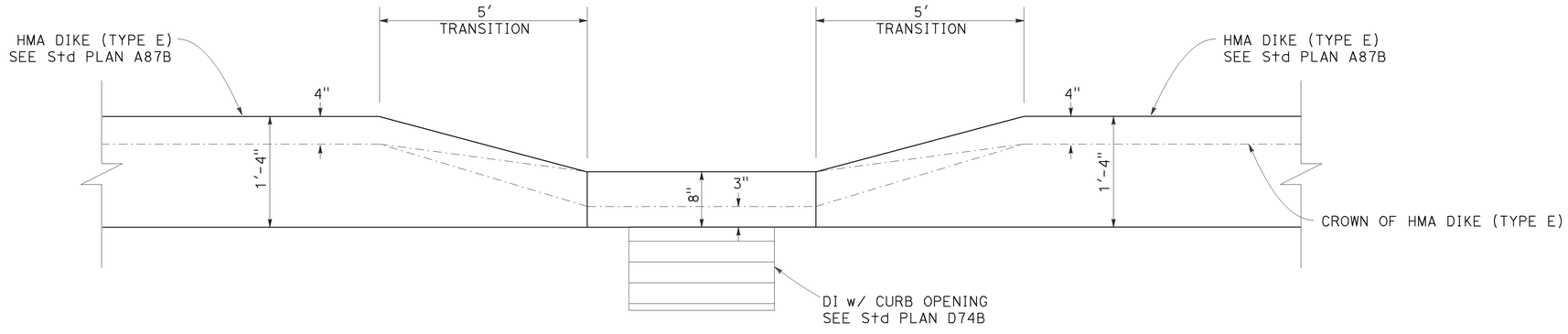

PLAN

HMA DIKE (TYPE E) TRANSITION TO DI WITH CURB OPENING

Dist	COUNTY	ROUTE	POST MILES TOTAL PROJECT	SHEET No.	TOTAL SHEETS
04	CC	680	0.0/R12.8	150	504

Han-Bin Liang 06/22/09
REGISTERED CIVIL ENGINEER DATE

2-1-10
PLANS APPROVAL DATE

REGISTERED PROFESSIONAL ENGINEER
HAN-BIN LIANG
No. C 48404
Exp. 6/30/10
CIVIL
STATE OF CALIFORNIA

THE STATE OF CALIFORNIA OR ITS OFFICERS OR AGENTS SHALL NOT BE RESPONSIBLE FOR THE ACCURACY OR COMPLETENESS OF SCANNED COPIES OF THIS PLAN SHEET.

WRECO
1243 ALPINE ROAD
SUITE 108
WALNUT CREEK, CA 94596

CALTRANS
111 GRAND AVENUE
OAKLAND, CA 94612

DRAINAGE DETAILS

NO SCALE

DD-5

REVISED BY	DATE REVISED
CS	11/25/09
RP	07/31/09

CALCULATED-DESIGNED BY: RAJA PERIKETI
CHECKED BY: CHRIS SEWELL
CONSULTANT FUNCTIONAL SUPERVISOR: HAN-BIN LIANG
STATE OF CALIFORNIA - DEPARTMENT OF TRANSPORTATION
Caltrans

LAST REVISION DATE PLOTTED => 04-FEB-2010
TIME PLOTTED => 14:09
11-25-09

BORDER LAST REVISED 4/11/2008
RELATIVE BORDER SCALE IS IN INCHES 0 1 2 3
USERNAME => trpierce
DGN FILE => 44470uic005.dgn
CU 04609
EA 4470U1

Dist	COUNTY	ROUTE	POST MILES TOTAL PROJECT	SHEET No.	TOTAL SHEETS
04	CC	680	0.0/R12.8	151	504

REGISTERED CIVIL ENGINEER 06/22/09 DATE

2-1-10
PLANS APPROVAL DATE

REGISTERED PROFESSIONAL ENGINEER HAN-BIN LIANG No. C 48404 Exp. 6/30/10 CIVIL STATE OF CALIFORNIA

THE STATE OF CALIFORNIA OR ITS OFFICERS OR AGENTS SHALL NOT BE RESPONSIBLE FOR THE ACCURACY OR COMPLETENESS OF SCANNED COPIES OF THIS PLAN SHEET.

WRECO
1243 ALPINE ROAD
SUITE 108
WALNUT CREEK, CA 94596

CALTRANS
111 GRAND AVENUE
OAKLAND, CA 94612

NOTES:

FOR HMA DIKE DETAILS NOT SHOWN, SEE Std PLAN A-87B

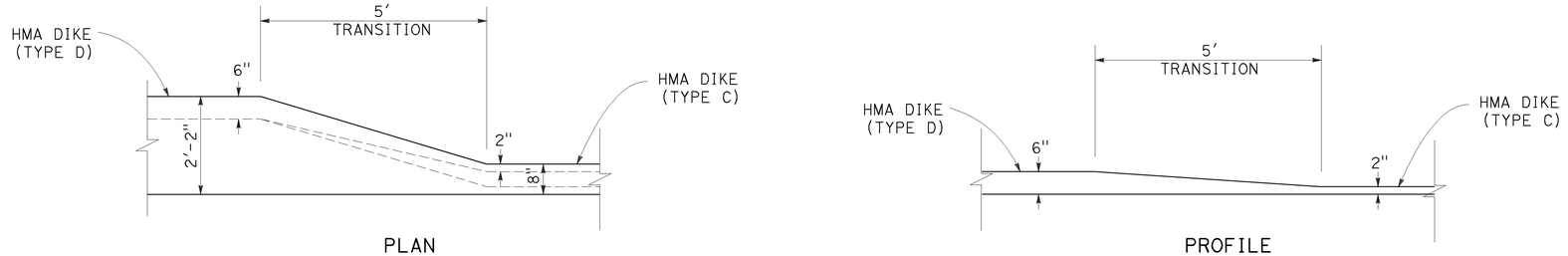

HMA DIKE (TYPE D) TRANSITION TO HMA DIKE (TYPE C)

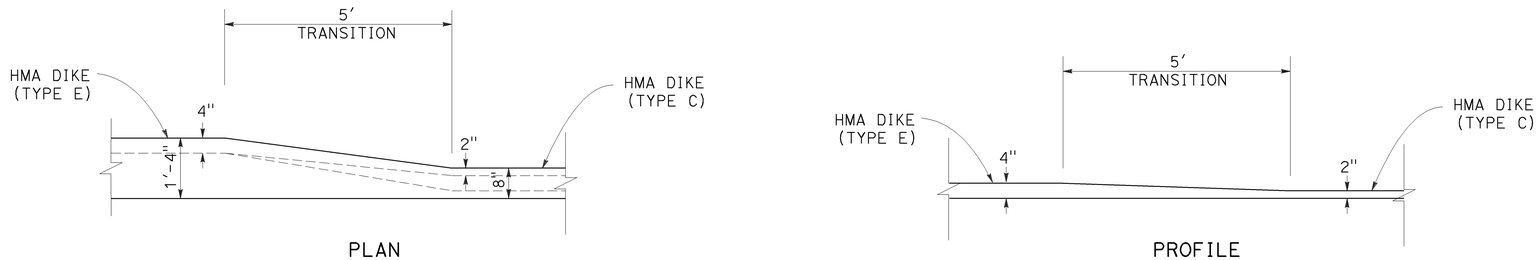

HMA DIKE (TYPE E) TRANSITION TO HMA DIKE (TYPE C)

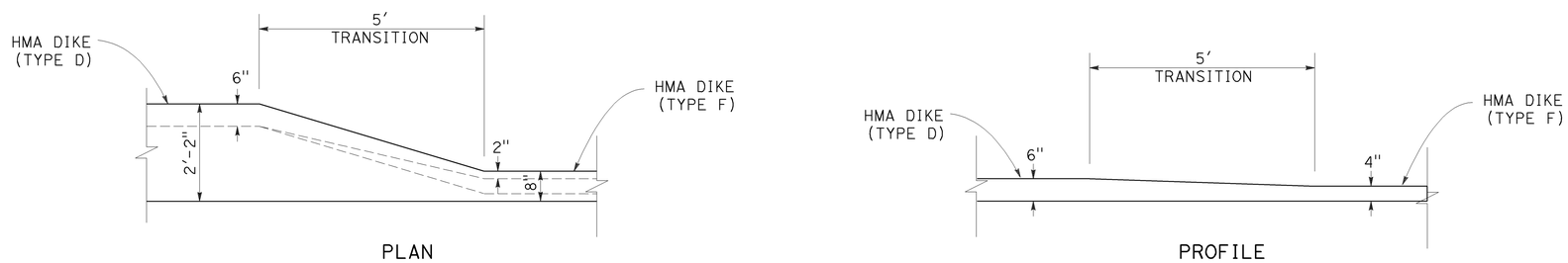

HMA DIKE (TYPE D) TRANSITION TO HMA DIKE (TYPE F)

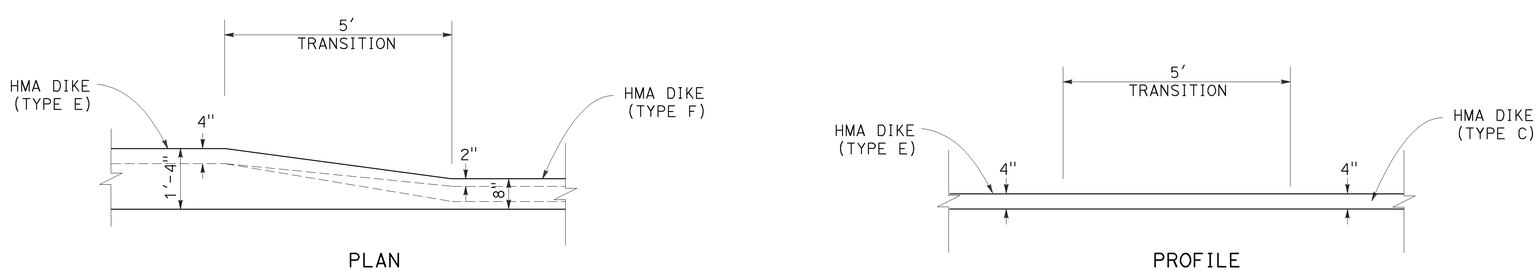

HMA DIKE (TYPE E) TRANSITION TO HMA DIKE (TYPE F)

DRAINAGE DETAILS

NO SCALE

DD-6

STATE OF CALIFORNIA - DEPARTMENT OF TRANSPORTATION

Caltrans

CONSULTANT FUNCTIONAL SUPERVISOR: HAN-BIN LIANG

CALCULATED-DESIGNED BY: RAJA PERIKETI

CHECKED BY: CHRIS SEWELL

REVISED BY: RP

DATE REVISED: 7/31/09

LAST REVISION 07-31-09

DATE PLOTTED => 04-FEB-2010

TIME PLOTTED => 14:09

Dist	COUNTY	ROUTE	POST MILES TOTAL PROJECT	SHEET No.	TOTAL SHEETS
04	CC	680	0.0/R12.8	152	504

Han-Bin Liang 06/22/09
REGISTERED CIVIL ENGINEER DATE

REGISTERED PROFESSIONAL ENGINEER
HAN-BIN LIANG
No. C 48404
Exp. 6/30/10
CIVIL
STATE OF CALIFORNIA

2-1-10
PLANS APPROVAL DATE

THE STATE OF CALIFORNIA OR ITS OFFICERS OR AGENTS SHALL NOT BE RESPONSIBLE FOR THE ACCURACY OR COMPLETENESS OF SCANNED COPIES OF THIS PLAN SHEET.

WRECO
1243 ALPINE ROAD
SUITE 108
WALNUT CREEK, CA 94596

CALTRANS
111 GRAND AVENUE
OAKLAND, CA 94612

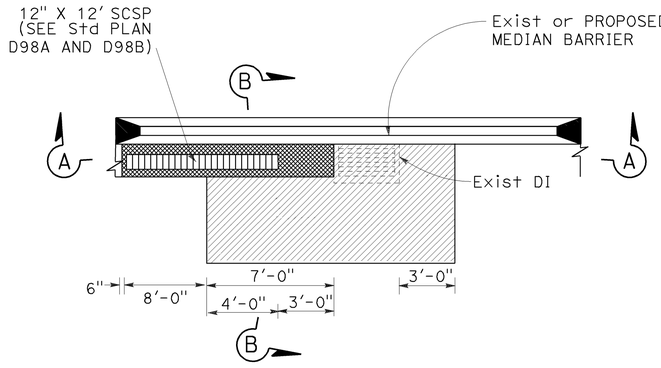

PLAN

TEMPORARY DRAINAGE FOR MEDIAN INLETS WITH STANDARD GUTTER DEPRESSION (TYPE 1)

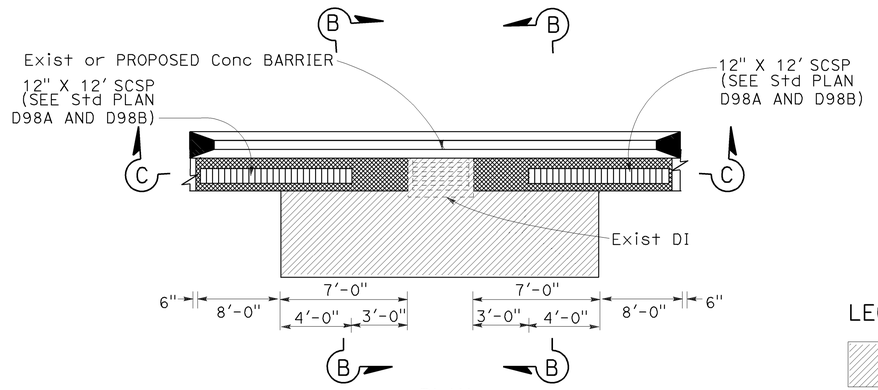

PLAN

TEMPORARY DRAINAGE FOR MEDIAN INLETS WITH STANDARD GUTTER DEPRESSION (TYPE 2)

LEGEND:

= REMOVE Exist STANDARD GUTTER DEPRESSION AND FILL HMA (3/4" Max AGGREGATE SIZE)

= MINOR Conc (Bkf)

= DIRECTION OF FLOW.

NOTES:

1. LOCATIONS OF MEDIAN INLETS WITH SGD ARE TO BE VERIFIED IN THE FIELD BY THE ENGINEER.
2. TYPE 1 IS FOR INLETS ON GRADE. TYPE 2 IS FOR INLETS IN GRADE SAG.

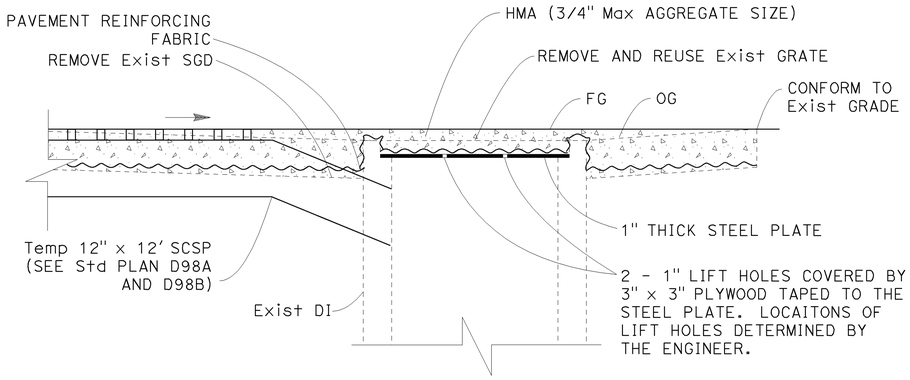

SECTION A-A

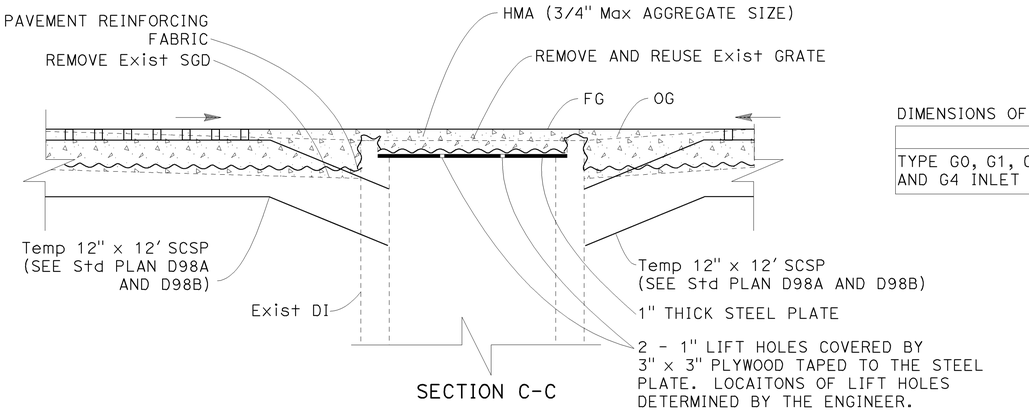

SECTION C-C

DIMENSIONS OF 3/4" THICK STEEL PLATE

	WIDTH	LENGTH
TYPE G0, G1, G2, G3, AND G4 INLET	1'-11 5/8"	3'-4"

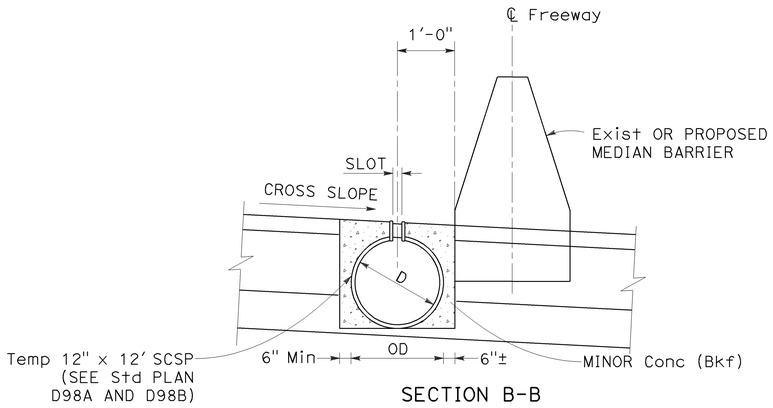

SECTION B-B

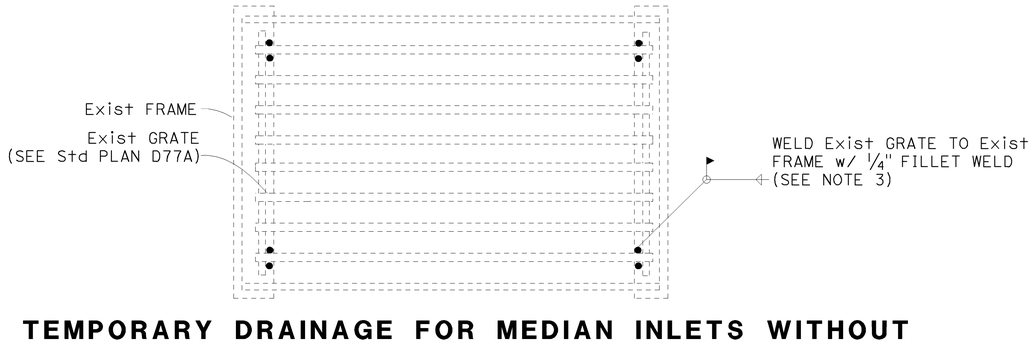

TEMPORARY DRAINAGE FOR MEDIAN INLETS WITHOUT STANDARD GUTTER DEPRESSION

NOTES:

1. LOCATIONS OF MEDIAN INLETS WITHOUT SGD ARE TO BE VERIFIED IN THE FIELD BY THE ENGINEER.
2. THE BOTTOM OF THE Exist GRATE SHALL BE WELDED TO THE Exist FRAME.
3. WELDING SHALL BE A 1/4" FILLET WELD w/ THE THE LENGTH OF 2", TOTAL 4 DOUBLE SIDE WEELDED JOINTS FOR EACH GRATE.

DRAINAGE DETAILS

NO SCALE

DD-7

REVISED BY	DATE REVISED
RP	07/31/09
CS	11/25/09

CALCULATED-DESIGNED BY: RAJA PERIKETI
CHECKED BY: CHRIS SEWELL
CONSULTANT FUNCTIONAL SUPERVISOR: HAN-BIN LIANG
STATE OF CALIFORNIA - DEPARTMENT OF TRANSPORTATION
Caltrans

LAST REVISION DATE PLOTTED => 04-FEB-2010
TIME PLOTTED => 14:10
11-25-09

BORDER LAST REVISED 4/11/2008
RELATIVE BORDER SCALE IS IN INCHES 0 1 2 3
USERNAME => trpierce
DGN FILE => 4470uic007.dgn
CU 04609
EA 4470U1

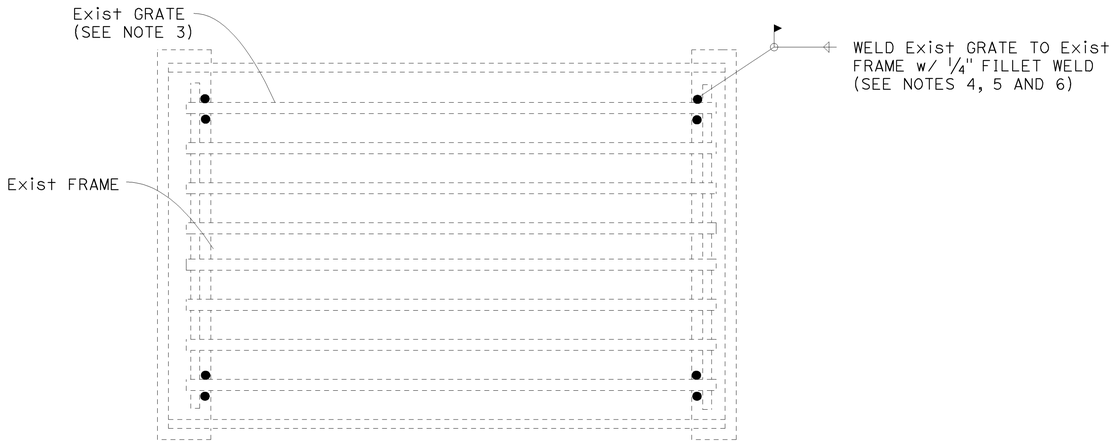

Dist	COUNTY	ROUTE	POST MILES TOTAL PROJECT	SHEET No.	TOTAL SHEETS
04	CC	680	0.0/R12.8	153	504

Han-Bin Liang 06/22/09
REGISTERED CIVIL ENGINEER DATE

2-1-10
PLANS APPROVAL DATE

REGISTERED PROFESSIONAL ENGINEER
HAN-BIN LIANG
No. C 48404
Exp. 6/30/10
CIVIL
STATE OF CALIFORNIA

THE STATE OF CALIFORNIA OR ITS OFFICERS OR AGENTS SHALL NOT BE RESPONSIBLE FOR THE ACCURACY OR COMPLETENESS OF SCANNED COPIES OF THIS PLAN SHEET.

WRECO
1243 ALPINE ROAD
SUITE 108
WALNUT CREEK, CA 94596

CALTRANS
111 GRAND AVENUE
OAKLAND, CA 94612

NOTE:

1. LOCATIONS OF MEDIAN INLETS WITHOUT SGD ARE TO BE VERIFIED IN THE FIELD BY THE ENGINEER.
2. FOR TEMPORARY DRAINAGE FOR MEDIAN INLETS w/ SGD, SEE DD-7.
3. FOR INLET DETAILS NOT SHOWN, SEE Std PLAN D73.
3. FOR GRATE DETAILS NOT SHOWN, SEE Std PLAN D77A.
4. THE BOTTOM OF THE Exist GRATE SHALL BE WELDED TO THE Exist. FRAME.
5. WELDING SHALL BE A 1/4" FILLET WELD w/ THE THE LENGTH OF 2", TOTAL 4 DOUBLE SIDE WEELDED JOINTS FOR EACH GRATE.

QUANTITIES FOR TEMPORARY DRAINAGE FOR MEDIAN INLETS WIHOUT SGD

LOCATION OF INLET (SB)	TEMPORARY WELD FRAME TO GRATE (EA)
0.14 Lt "A" 03.07.75	1
0.00 Lt "A" 08+00.53	1
0.00 Lt "A" 11+32.11	1
0.11 Lt "A" 14+00.72	1
0.00 Lt "A" 17+89.29	1
0.09 Lt "A" 21+84.47	1
1.24 Lt "A" 29+01.51	1
0.00 Lt "A" 33+79.27	1
0.00 Lt "A" 38+40.37	1
1.76 Lt "A" 39+97.64	1
1.32 Lt "A4" 70+50.45	1
1.25 Lt "A4" 75+52.04	1
0.00 Lt "A4" 79+87.31	1
0.00 Lt "A4" 94+00.00	1
1.21 Lt "A4" 101+00.00	1
1.72 Lt "A4" 143+00.45	1
0.00 Lt "A4" 148+00.97	1
0.90 Lt "A4" 175+96.68	1
0.00 Lt "A4" 202+73.58	1
0.00 Lt "A4" 207+37.51	1
1.85 Lt "A4" 222+01.44	1
2.05 Lt "A4" 224+02.87	1
1.81 Lt "A4" 226+03.53	1
2.66 Lt "A4" 228+05.26	1
0.00 Lt "A4" 233+16.62	1
0.00 Lt "A4" 251+00.00	1
0.00 Lt "A4" 265+46.51	1
0.00 Lt "A4" 266+10.51	1
0.00 Lt "A4" 303+86.75	1
6.93 Lt "A4" 340+22.46	1
0.00 Lt "A3" 621+01.81	1

LOCATION OF INLET (NB)	TEMPORARY WELD FRAME TO GRATE (EA)
1.17 Rt "A" 44+00.45	1
0.00 Rt "A4" 86+99.53	1
1.67 Rt "A4" 110+00.91	1
0.00 Rt "A4" 125+02.39	1
0.00 Rt "A4" 128+00.00	1
0.00 Rt "A4" 153+50.38	1
1.77 Rt "A4" 189+55.01	1
0.55 Rt "A4" 213+14.49	1
0.46 Rt "A4" 217+18.03	1
0.94 Rt "A4" 223+35.61	1
0.62 Rt "A4" 228+19.12	1
0.70 Rt "A4" 233+00.96	1
0.00 Rt "A4" 235+13.05	1
0.78 Rt "A4" 283+01.11	1
0.00 Rt "A4" 284+74.90	1
0.00 Rt "A4" 285+26.38	1
2.61 Rt "A4" 317+45.34	1
2.85 Rt "A4" 317+93.29	1
2.48 Rt "A4" 329+31.26	1
0.91 Rt "A4" 382+00.00	1
1.10 Rt "A4" 387+00.09	1
1.33 Rt "A4" 390+27.99	1
0.98 Rt "A4" 392+86.13	1
1.03 Rt "A4" 396+08.96	1
0.24 Rt "A4" 399+10.57	1
GRAND TOTAL	56

TEMPORARY DRAINAGE FOR MEDIAN INLETS WITHOUT SGD

DRAINAGE DETAILS
NO SCALE

DD-8

REVISED BY: RP | DATE REVISED: 7/31/09
RAJA PERIKETI | CHRIS SEWELL
CALCULATED-DESIGNED BY | CHECKED BY
CONSULTANT FUNCTIONAL SUPERVISOR: HAN-BIN LIANG
STATE OF CALIFORNIA - DEPARTMENT OF TRANSPORTATION
Caltrans

LAST REVISION | DATE PLOTTED => 04-FEB-2010 | TIME PLOTTED => 14:10
07-31-09

BORDER LAST REVISED 4/11/2008
RELATIVE BORDER SCALE IS IN INCHES 0 1 2 3
USERNAME => trpierce
DGN FILE => 44470uic008.dgn
CU 04609
EA 4470U1

NOTES:

1 (N) = NOT A SEPARATE PAY ITEM, FOR INFORMATION ONLY.
2 APC SHALL BE RCP OR PP w/ SMOOTH INTERIOR.

ABBREVIATIONS:

DD DOWNDRAIN JOINT TYPE
S STANDARD JOINT TYPE

DRAINAGE QUANTITIES

DRAINAGE SYSTEM No.	DRAINAGE UNIT	REMOVE DI	REMOVE CULVERT	REMOVE OVERSIDE DRAIN	ADJUST INLET	ADJUST FRAME AND COVER TO GRADE	Misc IRON AND STEEL	REMOVE CONCRETE	MINOR CONCRETE: Misc CONSTRUCTION	MINOR CONCRETE: MINOR STRUCTURE	12" PLASTIC PIPE DOWNDRAIN	18" APC	10" FLUME DOWNDRAIN	10" FLUME ANCHOR ASSEMBLY	12" SLOTTED CORRUGATED STEEL PIPE (N)	CAP DI	GRATED LINE DRAIN	TAPERED INLET	ENTRANCE TAPER (TYPE 1)	RSP (FACING, METHOD B)	RSP FABRIC	HOT MIX ASPHALT (Misc AREA)	TYPE 24-12 FRAME AND GRATE (N)	PIPE JOINT CLASSIFICATION (N)	MAXIMUM COVER (N)	HEIGHT OF DI (N)	DESCRIPTION	STATION	DRAINAGE PLAN SHEET No.	DRAINAGE SYSTEM No.	DRAINAGE UNIT
		EA	LF		EA		LB		CY			LF		EA	LF	EA	LF		EA		CY	SQYD		EA		LF						
1	a							1.15	1.15																			R&R SGD ON GRADE	71.69' Lt A 3+00.62	D-1	1	a
	b											85.5													S	2.57		18" APC	24.97' Lt SR1 571+51.16 TO 35.14' Lt SR1 572+40.48			b
	c														39.3													12" SCSP	24.97' Lt SR1 571+51.16 TO 26.89' Lt SR1 571+92.97			c
	d						326		1.15	1.58													1			4.07	G2 DI w/ SGD	35.14' Lt SR1 572+40.48			d
	e							1.15	1.15																			R&R SGD ON GRADE	73.80' Rt A 3+00.33			e
	f							1.15	1.15																			R&R SGD ON GRADE	70.14' Rt A 6+33.78			f
	g							1.15	1.15																			R&R SGD ON GRADE	73.28' Lt A 8+00.35			g
1	h							1.15	1.15																			R&R SGD ON GRADE	84.01' Rt A 14+01.69	D-1	1	h
2	a							1.15	1.15																			R&R SGD ON GRADE	67.62' Lt A 17+90.70	D-2	2	a
	b															1												CAP DI	76.30' Rt A 17+90.23			b
	c		3.0																									REMOVE 36" RCP (PORTION)	68.78' Rt A 21+84.87			c
	d						326		1.15	2.16													1			6.33	G2 DI w/ SGD	68.78' Rt A 21+84.87			d
	e											187.9													S	2.50		18" APC	68.78' Rt A 21+84.87 TO 68.87' Rt A 23+76.94			e
	f						326		1.15	1.57													1			4.00	G2 DI w/ SGD	68.87' Rt A 23+76.94			f
	g											62.3													S	2.50		18" APC	68.87' Rt A 23+76.94 TO 68.79' Rt A 24+44.77			g
	h														60.6													12" SCSP	68.87' Rt A 23+76.94 TO 66.07' Rt A 24+40.29			h
	i						326		1.15	1.56													1			3.97	G2 DI w/ SGD	68.79' Rt A 24+44.77			i
	j							1.15	1.15																			R&R SGD ON GRADE	69.03' Rt A 29+21.22			j
	k							1.15	1.15																			R&R SGD ON GRADE	73.69' Lt A 29+00.45			k
	l							1.15	1.15																			R&R SGD ON GRADE	79.37' Rt A 33+79.37			l
	m							1.15	1.15																			R&R SGD ON GRADE	70.17' Rt A 38+00.27			m
2	n							1.15	1.15																			R&R SGD ON GRADE	70.40' Rt A 44+00.34	D-2	2	n
3	a							1.15	1.15																			R&R SGD ON GRADE	69.42' Lt A4 48+66.93	D-3	3	a
	b							1.15	1.15																			R&R SGD ON GRADE	3.82' Lt A4 48+77.70			b
	c							1.15	1.15																			R&R SGD ON GRADE	70.16' Rt A4 48+89.41			c
	d							1.15	1.15																			R&R SGD ON GRADE	3.27' Lt A4 51+51.01			d
	e							1.15	1.15																			R&R SGD ON GRADE	69.31' Rt A4 64+94.69			e
	f							1.15	1.15																			R&R SGD ON GRADE	71.34' Lt A4 65+00.74			f
	g							1.15	1.15																			R&R SGD ON GRADE	69.75' Lt A4 70+50.56			g
3	h							1.15	1.15																			R&R SGD ON GRADE	69.78' Rt A4 70+50.18	D-3	3	h
			3.0				1304	21.85	26.45	6.87		335.7			99.9	1							4					SHEET TOTAL				

Dist	COUNTY	ROUTE	POST MILES TOTAL PROJECT	SHEET No.	TOTAL SHEETS
04	CC	680	0.0/R12.8	154	504

Han-Bin Liang 06/22/09
REGISTERED CIVIL ENGINEER DATE

2-1-10
PLANS APPROVAL DATE

REGISTERED PROFESSIONAL ENGINEER
HAN-BIN LIANG
No. C 48404
Exp. 6/30/10
CIVIL
STATE OF CALIFORNIA

THE STATE OF CALIFORNIA OR ITS OFFICERS OR AGENTS SHALL NOT BE RESPONSIBLE FOR THE ACCURACY OR COMPLETENESS OF ELECTRONIC COPIES OF THIS PLAN SHEET.

WRECO
1243 ALPINE ROAD
SUITE 108
WALNUT CREEK, CA 94596

CALTRANS
111 GRAND AVENUE
OAKLAND, CA 94612

DRAINAGE QUANTITIES DQ-1

REVISED BY: RP 07/31/09
DATE REVISED: CS 11/25/09
CALCULATED-DESIGNED BY: RAJA PERIKETI
CHECKED BY: CHRIS SEWELL
CONSULTANT FUNCTIONAL SUPERVISOR: HAN-BIN LIANG
STATE OF CALIFORNIA - DEPARTMENT OF TRANSPORTATION
Caltrans

LAST REVISION DATE PLOTTED => 04-FEB-2010
TIME PLOTTED => 14:10
11-25-09

BORDER LAST REVISED 4/11/2008
RELATIVE BORDER SCALE IS IN INCHES 0 1 2 3
USERNAME => trpierce
DGN FILE => 4447Ouid001.dgn
CU 04236
EA 4470U1

Dist	COUNTY	ROUTE	POST MILES TOTAL PROJECT	SHEET No.	TOTAL SHEETS
04	CC	680	0.0/R12.8	155	504

Han-Bin Liang 06/22/09
REGISTERED CIVIL ENGINEER DATE

2-1-10
PLANS APPROVAL DATE

REGISTERED PROFESSIONAL ENGINEER HAN-BIN LIANG No. C 48404 Exp. 6/30/10 CIVIL STATE OF CALIFORNIA

THE STATE OF CALIFORNIA OR ITS OFFICERS OR AGENTS SHALL NOT BE RESPONSIBLE FOR THE ACCURACY OR COMPLETENESS OF ELECTRONIC COPIES OF THIS PLAN SHEET.

WRECO
1243 ALPINE ROAD
SUITE 108
WALNUT CREEK, CA 94596

CALTRANS
111 GRAND AVENUE
OAKLAND, CA 94612

DRAINAGE QUANTITIES

DRAINAGE SYSTEM No.	DRAINAGE UNIT	REMOVE DI (EA)	REMOVE CULVERT (LF)	REMOVE OVERSIDE DRAIN (EA)	ADJUST INLET (EA)	ADJUST FRAME AND COVER TO GRADE (EA)	Misc IRON AND STEEL (LB)	REMOVE CONCRETE (CY)	MINOR CONCRETE: Misc CONSTRUCTION (CY)	MINOR CONCRETE: MINOR STRUCTURE (CY)	12" PLASTIC PIPE DOWNDRAIN (LF)	18" APC (LF)	10" FLUME DOWNDRAIN (LF)	10" FLUME ANCHOR ASSEMBLY (EA)	12" SLOTTED CORRUGATED STEEL PIPE (N) (LF)	CAP DI (EA)	GRATED LINE DRAIN (LF)	TAPERED INLET (EA)	ENTRANCE TAPER (TYPE 1) (EA)	RSP (FACING, METHOD B) (CY)	RSP FABRIC (SQYD)	HOT MIX ASPHALT (Misc AREA) (SQYD)	TYPE 24-12 FRAME AND GRATE (N) (EA)	PIPE JOINT CLASSIFICATION (N)	MAXIMUM COVER (N) (LF)	HEIGHT OF DI (N) (LF)	DESCRIPTION	STATION	DRAINAGE PLAN SHEET No.	DRAINAGE SYSTEM No.	DRAINAGE UNIT
4	a							1.15	1.15																			R&R SGD ON GRADE	69.17′ R† A4 74+50.47	D-4	4	a
	b							1.15	1.15																			R&R SGD ON GRADE	68.73′ L† A4 75+68.73			b
	c							1.15	1.15																			R&R SGD ON GRADE	69.30′ R† A4 75+50.55			c
	d							1.55	1.55																			R&R SGD IN GRADE SAG	68.80′ L† A4 79+87.62			d
	e							1.55	1.55																			R&R SGD IN GRADE SAG	69.82′ R† A4 79+87.28			e
	f							1.55	1.55																			R&R SGD IN GRADE SAG	70.11′ R† A4 80+45.83			f
	g							1.55	1.55																			R&R SGD IN GRADE SAG	70.03′ R† A4 80+75.60			g
	h															1												CAP DI	69.54′ L† A4 86+99.74			h
	i							1.15	1.15																			R&R SGD ON GRADE	69.67′ R† A4 87+00.12			i
	j							1.15	1.15																			R&R SGD ON GRADE	69.50′ R† A4 90+50.40			j
	k							1.15	1.15																			R&R SGD ON GRADE	68.54′ L† A4 94+00.72			k
	l							1.15	1.15																			R&R SGD ON GRADE	70.70′ R† A4 94+01.38			l
	m							1.15	1.15																			R&R SGD ON GRADE	69.70′ R† A4 101+00.26			m
	n											80.1													S	4.38		18" APC	69.43′ L† A4 101+00.00 TO 69.16′ L† A4 101+84.78			n
	o																27.0											GRATED LINE DRAIN	69.81′ L† A4 101+54.90 TO 69.16′ L† A4 101+84.78			o
4	p						326		1.15	2.08														1			6.00		G2 DI w/ SGD	69.16′ L† A4 101+84.78	D-4	4	p
5	a							1.15	1.15																			R&R SGD ON GRADE	68.57′ L† A4 108+04.31	D-5	5	a
	b							1.15	1.15																			R&R SGD ON GRADE	70.55′ R† A4 110+01.05			b
	c							1.15	1.15																			R&R SGD ON GRADE	69.39′ R† A4 119+00.56			c
	d							1.15	1.15																			R&R SGD ON GRADE	81.08′ R† A4 125+00.76			d
5	e															1												CAP DI	81.39′ R† A4 128+21.30	D-5	5	e
6	a							1.15	1.15																			R&R SGD ON GRADE	69.16′ L† A4 144+99.71	D-6	6	a
	b		36.7																									REMOVE Culv	89.77′ R† A4 137+79.00			b
	c											36.7													DD			18" APC	89.77′ R† A4 137+79.00 TO 127.39′ R† A4 137+77.46			c
	d											174.0													S	3.60		18" APC	89.77′ R† A4 137+79.00 TO 33.60′ R† BR1 139+60.15			d
	e						326		1.15	1.44														1			3.50		G2 DI w/ SGD	33.60′ R† BR1 139+60.15			e
	f						326		1.15	1.57														1			4.00		G2 DI w/ SGD	32.73′ R† BR1 141+59.17			f
6	g											140.5													S	3.87		18" APC	32.73′ R† BR1 141+59.17 TO 33.60′ R† BR1 143+06.84	D-6	6	g
7	a							1.15	1.15																			R&R SGD ON GRADE	76.32′ L† A4 148+00.82	D-7	7	a
			36.7				978	22.30	25.75	5.09		431.3				2	27.0						3					SHEET TOTAL				

DRAINAGE QUANTITIES DQ-2

LAST REVISION DATE PLOTTED => 04-FEB-2010
TIME PLOTTED => 14:10
11-25-09

STATE OF CALIFORNIA - DEPARTMENT OF TRANSPORTATION
Caltrans

CONSULTANT FUNCTIONAL SUPERVISOR: HAN-BIN LIANG

CALCULATED-DESIGNED BY: RAJA PERIKETI
CHECKED BY: CHRIS SEWELL

	REVISED BY	CS
	DATE REVISED	11/25/09
	REVISED BY	RP
	DATE REVISED	07/31/09

BORDER LAST REVISED 4/11/2008

RELATIVE BORDER SCALE IS IN INCHES 0 1 2 3

USERNAME => trpierce
DGN FILE => 44470uid002.dgn

CU 04236

EA 4470U1

Dist	COUNTY	ROUTE	POST MILES TOTAL PROJECT	SHEET No.	TOTAL SHEETS
04	CC	680	0.0/R12.8	156	504

Han-Bin Liang 06/22/09
REGISTERED CIVIL ENGINEER DATE

HAN-BIN LIANG No. C 48404 Exp. 6/30/10 CIVIL — REGISTERED PROFESSIONAL ENGINEER — STATE OF CALIFORNIA

2-1-10
PLANS APPROVAL DATE

THE STATE OF CALIFORNIA OR ITS OFFICERS OR AGENTS SHALL NOT BE RESPONSIBLE FOR THE ACCURACY OR COMPLETENESS OF ELECTRONIC COPIES OF THIS PLAN SHEET.

WRECO
1243 ALPINE ROAD
SUITE 108
WALNUT CREEK, CA 94596

CALTRANS
111 GRAND AVENUE
OAKLAND, CA 94612

DRAINAGE QUANTITIES

DRAINAGE SYSTEM No.	DRAINAGE UNIT	REMOVE DI (EA)	REMOVE CULVERT (LF)	REMOVE OVERSIDE DRAIN (EA)	ADJUST INLET (EA)	ADJUST FRAME AND COVER TO GRADE (EA)	Misc IRON AND STEEL (LB)	REMOVE CONCRETE (CY)	MINOR CONCRETE: Misc CONSTRUCTION (CY)	MINOR CONCRETE: MINOR STRUCTURE (CY)	12" PLASTIC PIPE DOWNDRAIN (LF)	18" APC (LF)	10" FLUME DOWNDRAIN (LF)	10" FLUME ANCHOR ASSEMBLY (EA)	12" SLOTTED CORRUGATED STEEL PIPE (N) (LF)	CAP DI (EA)	GRATED LINE DRAIN (LF)	TAPERED INLET ENTRANCE TAPER (TYPE 1) (EA)	RSP (FACING, METHOD B) (CY)	RSP FABRIC (SQYD)	HOT MIX ASPHALT (Misc AREA)	TYPE 24-12 FRAME AND GRATE (N) (EA)	PIPE JOINT CLASSIFICATION (N)	MAXIMUM COVER (N) (LF)	HEIGHT OF DI (N) (LF)	DESCRIPTION	STATION	DRAINAGE PLAN SHEET No.	DRAINAGE SYSTEM No.	DRAINAGE UNIT
8	a							1.15	1.15																		R&R SGD ON GRADE	32.19' Lt "BL3" 165+81.29	D-8	8	a
9	a							1.55	1.55																		R&R SGD IN GRADE SAG	3.32' Lt A4 180+68.59	D-9	9	a
	b							1.55	1.55																		R&R SGD IN GRADE SAG	3.17' Lt A4 181+00.07			b
	c							1.15	1.15																		R&R SGD ON GRADE	3.60' Lt A4 183+00.48			c
	d							1.15	1.15																		R&R SGD ON GRADE	3.25' Lt A4 185+00.40			d
	e							1.55	1.55																		R&R SGD IN GRADE SAG	2.91' Lt A4 187+00.42			e
	f							1.55	1.55																		R&R SGD IN GRADE SAG	4.38' Rt A4 187+53.98			f
	g							1.55	1.55																		R&R SGD IN GRADE SAG	2.88' Lt A4 189+00.11			g
	h							1.55	1.55																		R&R SGD IN GRADE SAG	4.36' Rt A4 189+55.18			h
	i							1.15	1.15																		R&R SGD ON GRADE	82.87' Lt A4 194+77.00			i
	j							1.15	1.15																		R&R SGD ON GRADE	83.02' Lt A4 196+44.22			j
9	k							1.15	1.15																		R&R SGD ON GRADE	80.88' Rt A4 199+95.73	D-9	9	k
10	a							1.15	1.15																		R&R SGD ON GRADE	80.50' Rt A4 202+22.71	D-10	10	a
	b							1.15	1.15																		R&R SGD ON GRADE	82.66' Rt A4 202+74.07			b
	c							1.15	1.15																		R&R SGD ON GRADE	82.69' Rt A4 206+53.51			c
10	d							1.15	1.15																		R&R SGD ON GRADE	86.48' Rt A4 207+29.76	D-10	10	d
12	a							1.15	1.15																		R&R SGD ON GRADE	4.70' Lt A4 229+01.23	D-12	12	a
	b							1.15	1.15																		R&R SGD ON GRADE	72.93' Rt A4 232+03.69			b
	c							1.15	1.15																		R&R SGD ON GRADE	22.73' Rt CR2 236+27.37			c
	d							1.15	1.15																		R&R SGD ON GRADE	3.30' Rt A4 233+00.96			d
	e	1																									REMOVE DI	86.20' Lt A4 234+00.42			e
	f						326		1.15	1.87													1		5.21		G2 DI w/ SGD	86.20' Lt A4 234+00.42			f
12	g																42.5										GRATED LINE DRAIN	86.20' Lt A4 234+00.42 TO 81.01' Lt A4 234+44.68	D-12	12	g
13	a							1.15	1.15																		R&R SGD ON GRADE	70.79' Rt A4 250+00.40	D-13	13	a
	b							1.15	1.15																		R&R SGD ON GRADE	70.68' Rt A4 251+00.65			b
	c							1.15	1.15																		R&R SGD ON GRADE	70.72' Rt A4 255+70.65			c
13	d							1.55	1.55																		R&R SGD IN GRADE SAG	2.97' Lt A4 258+73.00	D-13	13	d
		1					326	30.40	31.55	1.87							42.5						1				SHEET TOTAL				

DRAINAGE QUANTITIES DQ-3

LAST REVISION DATE PLOTTED => 04-FEB-2010
TIME PLOTTED => 14:10 11-25-09

STATE OF CALIFORNIA - DEPARTMENT OF TRANSPORTATION
Caltrans

CONSULTANT FUNCTIONAL SUPERVISOR: HAN-BIN LIANG

CALCULATED-DESIGNED BY: RAJA PERIKETI
CHECKED BY: CHRIS SEWELL

	REVISED BY	DATE REVISED
	RP	07/31/09
	CS	11/25/09

BORDER LAST REVISED 4/11/2008

RELATIVE BORDER SCALE IS IN INCHES 0 1 2 3

USERNAME => trpierce
DGN FILE => 44470uid003.dgn

CU 04236

EA 4470U1

Dist	COUNTY	ROUTE	POST MILES TOTAL PROJECT	SHEET No.	TOTAL SHEETS
04	CC	680	0.0/R12.8	157	504

Han-Bin Liang 06/22/09
REGISTERED CIVIL ENGINEER DATE

HAN-BIN LIANG No. C 48404 Exp. 6/30/10 CIVIL — REGISTERED PROFESSIONAL ENGINEER — STATE OF CALIFORNIA

2-1-10
PLANS APPROVAL DATE

THE STATE OF CALIFORNIA OR ITS OFFICERS OR AGENTS SHALL NOT BE RESPONSIBLE FOR THE ACCURACY OR COMPLETENESS OF ELECTRONIC COPIES OF THIS PLAN SHEET.

WRECO
1243 ALPINE ROAD
SUITE 108
WALNUT CREEK, CA 94596

CALTRANS
111 GRAND AVENUE
OAKLAND, CA 94612

DRAINAGE QUANTITIES

DRAINAGE SYSTEM No.	DRAINAGE UNIT	REMOVE DI (EA)	REMOVE CULVERT (LF)	REMOVE OVERSIDE DRAIN (EA)	ADJUST INLET (EA)	ADJUST FRAME AND COVER TO GRADE (EA)	Misc IRON AND STEEL (LB)	REMOVE CONCRETE (CY)	MINOR CONCRETE: Misc CONSTRUCTION (CY)	MINOR CONCRETE: MINOR STRUCTURE (CY)	12" PLASTIC PIPE DOWNDRAIN (LF)	18" APC (LF)	10" FLUME DOWNDRAIN (LF)	10" FLUME ANCHOR ASSEMBLY (EA)	12" SLOTTED CORRUGATED STEEL PIPE (N) (LF)	CAP DI (EA)	GRATED LINE DRAIN (LF)	TAPERED INLET (EA)	ENTRANCE TAPER (TYPE 1) (EA)	RSP (FACING, METHOD B) (CY)	RSP FABRIC (SQYD)	HOT MIX ASPHALT (Misc AREA) (SQYD)	TYPE 24-12 FRAME AND GRATE (N) (EA)	PIPE JOINT CLASSIFICATION (N)	MAXIMUM COVER (N) (LF)	HEIGHT OF DI (N) (LF)	DESCRIPTION	STATION	DRAINAGE PLAN SHEET No.	DRAINAGE SYSTEM No.	DRAINAGE UNIT
13	e							1.15	1.15																			R&R SGD ON GRADE	70.52′ R† A4 260+98.67	D-13	13	e
	f							1.15	1.15																			R&R SGD ON GRADE	70.54′ R† A4 266+50.60			f
14	a							1.15	1.15																			R&R SGD ON GRADE	68.67′ L† A4 270+84.88	D-14	14	a
	b							1.15	1.15																			R&R SGD ON GRADE	70.78′ R† A4 270+74.52			b
	c							1.15	1.15																			R&R SGD ON GRADE	68.85′ L† A4 275+00.26			c
	d							1.15	1.15																			R&R SGD ON GRADE	69.95′ R† A4 274+99.08			d
	e							1.15	1.15																			R&R SGD ON GRADE	68.84′ L† A4 279+00.43			e
	f							1.15	1.15																			R&R SGD ON GRADE	68.71′ R† A4 279+01.03			f
	g							1.15	1.15																			R&R SGD ON GRADE	69.78′ R† A4 282+50.63			g
	h							1.15	1.15																			R&R SGD ON GRADE	69.11′ L† A4 283+01.19			h
	i							1.55	1.55																			R&R SGD IN GRADE SAG	67.38′ R† A4 283+49.50			i
	j							1.55	1.55																			R&R SGD IN GRADE SAG	69.49′ R† A4 283+97.06			j
	k							1.55	1.55																			R&R SGD IN GRADE SAG	68.80′ R† A4 284+39.98			k
	l							1.15	1.15																			R&R SGD ON GRADE	68.28′ L† A4 287+00.77			l
	m							1.15	1.15																			R&R SGD ON GRADE	1.35′ R† A4 287+00.19			m
	n							1.15	1.15																			R&R SGD ON GRADE	68.05′ L† A4 291+00.58			n
	o							1.15	1.15																			R&R SGD ON GRADE	1.35′ R† A4 291+00.45			o
	p							1.15	1.15																			R&R SGD ON GRADE	1.07′ R† A4 296+05.69			p
14	q							1.15	1.15																			R&R SGD ON GRADE	68.06′ L† A4 296+29.22	D-14	14	q
15	a							1.15	1.15																			R&R SGD ON GRADE	70.20′ R† A3 299+55.28	D-15	15	a
	b							1.55	1.55																			R&R SGD IN GRADE SAG	68.25′ L† A3 303+85.52			b
	c							1.15	1.15																			R&R SGD ON GRADE	70.55′ R† A3 303+87.95			c
	d							1.55	1.55																			R&R SGD IN GRADE SAG	71.68′ L† A3 305+79.13			d
	e							1.15	1.15																			R&R SGD ON GRADE	69.47′ R† A3 307+91.42			e
	f							1.15	1.15																			R&R SGD ON GRADE	2.67′ L† A3 309+51.65			f
	g							1.15	1.15																			R&R SGD ON GRADE	71.28′ L† A3 309+99.45			g
	h							1.15	1.15																			R&R SGD ON GRADE	0.00′ L† A3 311+00.00			h
	i							1.15	1.15																			R&R SGD ON GRADE	70.59′ R† A3 310+94.55			i
15	j							1.15	1.15																			R&R SGD ON GRADE	3.98′ R† A3 315+00.35	D-15	15	j
								35.35	35.35																			SHEET TOTAL				

DRAINAGE QUANTITIES **DQ-4**

STATE OF CALIFORNIA - DEPARTMENT OF TRANSPORTATION
Caltrans
CONSULTANT FUNCTIONAL SUPERVISOR: HAN-BIN LIANG
CALCULATED-DESIGNED BY: CHRIS SEWELL
CHECKED BY: RAJA PERIKETI
REVISED BY: RP
DATE REVISED: 07/31/09
CS 11/25/09

LAST REVISION DATE PLOTTED => 04-FEB-2010
TIME PLOTTED => 14:10
11-25-09

BORDER LAST REVISED 4/11/2008
RELATIVE BORDER SCALE IS IN INCHES 0 1 2 3
USERNAME => trpierce
DGN FILE => 4470uid004.dgn
CU 04236
EA 4470U1

Dist	COUNTY	ROUTE	POST MILES TOTAL PROJECT	SHEET No.	TOTAL SHEETS
04	CC	680	0.0/R12.8	158	504

Han-Bin Liang 06/22/09
REGISTERED CIVIL ENGINEER DATE

HAN-BIN LIANG No. C 48404 Exp. 6/30/10 CIVIL — REGISTERED PROFESSIONAL ENGINEER — STATE OF CALIFORNIA

2-1-10
PLANS APPROVAL DATE

THE STATE OF CALIFORNIA OR ITS OFFICERS OR AGENTS SHALL NOT BE RESPONSIBLE FOR THE ACCURACY OR COMPLETENESS OF ELECTRONIC COPIES OF THIS PLAN SHEET.

WRECO
1243 ALPINE ROAD
SUITE 108
WALNUT CREEK, CA 94596

CALTRANS
111 GRAND AVENUE
OAKLAND, CA 94612

DRAINAGE QUANTITIES

DRAINAGE SYSTEM No.	DRAINAGE UNIT	REMOVE DI (EA)	REMOVE CULVERT (LF)	REMOVE OVERSIDE DRAIN (EA)	ADJUST INLET (EA)	ADJUST FRAME AND COVER TO GRADE (EA)	Misc IRON AND STEEL (LB)	REMOVE CONCRETE (CY)	MINOR CONCRETE: Misc CONSTRUCTION (CY)	MINOR CONCRETE: MINOR STRUCTURE (CY)	12" PLASTIC PIPE DOWNDRAIN (LF)	18" APC (LF)	10" FLUME DOWNDRAIN (LF)	10" FLUME ANCHOR ASSEMBLY (EA)	12" SLOTTED CORRUGATED STEEL PIPE (N) (LF)	CAP DI (EA)	GRATED LINE DRAIN (LF)	TAPERED INLET (EA)	ENTRANCE TAPER (TYPE 1) (EA)	RSP (FACING, METHOD B) (CY)	RSP FABRIC (SQYD)	HOT MIX ASPHALT (Misc AREA) (SQYD)	TYPE 24-12 FRAME AND GRATE (N) (EA)	PIPE JOINT CLASSIFICATION (N)	MAXIMUM COVER (N) (LF)	HEIGHT OF DI (N) (LF)	DESCRIPTION	STATION	DRAINAGE PLAN SHEET No.	DRAINAGE SYSTEM No.	DRAINAGE UNIT
15	k							1.15	1.15																			R&R SGD ON GRADE	70.43′ Rt A3 315+53.74	D-15	15	k
	l							1.15	1.15																			R&R SGD ON GRADE	69.90′ Rt A3 318+69.72			l
15	m							1.15	1.15																			R&R SGD ON GRADE	68.84′ Rt A3 322+51.03	D-15	15	m
16	a							1.15	1.15																			R&R SGD ON GRADE	70.60′ Rt A3 326+00.00	D-16	16	a
	b															1												CAP DI	69.23′ Lt A3 329+31.36			b
	c							1.15	1.15																			R&R SGD ON GRADE	70.50′ Rt A3 329+30.65			c
	d							1.15	1.15																			R&R SGD ON GRADE	68.36′ Lt A3 334+19.87			d
16	e							1.15	1.15																			R&R SGD ON GRADE	70.15′ Rt A3 334+18.55	D-16	16	e
17	a							1.15	1.15																			R&R SGD ON GRADE	81.19′ Rt A3 339+03.11	D-17	17	a
	b							1.15	1.15																			R&R SGD ON GRADE	70.45′ Rt A3 349+48.71			b
18	a							1.55	1.55																			R&R SGD IN GRADE SAG	3.74′ Lt A3 351+80.52	D-18	18	a
	b							1.55	1.55																			R&R SGD IN GRADE SAG	3.71′ Lt A3 352+00.00			b
	c							1.55	1.55																			R&R SGD IN GRADE SAG	3.55′ Lt A3 352+29.97			c
	d							1.55	1.55																			R&R SGD IN GRADE SAG	3.45′ Lt A4 353+13.98			d
	e							1.55	1.55																			R&R SGD IN GRADE SAG	70.44′ Rt A4 353+69.55			e
	f							1.55	1.55																			R&R SGD IN GRADE SAG	3.30′ Lt A4 354+27.30			f
	g							1.55	1.55																			R&R SGD IN GRADE SAG	70.44′ Rt A4 354+27.30			g
	h							1.15	1.15																			R&R SGD ON GRADE	69.68′ Rt A4 358+00.23			h
18	i							1.15	1.15																			R&R SGD ON GRADE	3.49′ Lt A4 358+00.22	D-18	18	i
19	a							1.15	1.15																			R&R SGD ON GRADE	3.99′ Lt A4 361+50.30	D-19	19	a
	b							1.15	1.15																			R&R SGD ON GRADE	72.19′ Lt A4 361+61.10			b
19	c							1.15	1.15																			R&R SGD ON GRADE	3.50′ Lt A4 364+88.08	D-19	19	c
21	a				1																							Adj DI TO GRADE	70.34′ Lt A3 399+21.58	D-21	21	a
	b							1.15	1.15																			R&R SGD ON GRADE	70.34′ Lt A3 399+21.58			b
	c				1																							Adj DI TO GRADE	2.82′ Rt A3 399+10.36			c
21	d							1.15	1.15																			R&R SGD ON GRADE	2.82′ Rt A3 399+10.36	D-21	21	d
					2			29.25	29.25							1												SHEET TOTAL				

DRAINAGE QUANTITIES DQ-5

LAST REVISION DATE PLOTTED => 04-FEB-2010
11-25-09 TIME PLOTTED => 14:10

	CS	11/25/09
	RP	07/31/09
REVISED BY	RAJA PERIKETI	
DATE REVISED	CHRIS SEWELL	
CALCULATED-DESIGNED BY		
CHECKED BY		

CONSULTANT FUNCTIONAL SUPERVISOR: HAN-BIN LIANG

STATE OF CALIFORNIA - DEPARTMENT OF TRANSPORTATION
Caltrans

BORDER LAST REVISED 4/11/2008

RELATIVE BORDER SCALE IS IN INCHES 0 1 2 3

USERNAME => trpierce
DGN FILE => 4447Ouid005.dgn

CU 04236

EA 4470U1

Dist	COUNTY	ROUTE	POST MILES TOTAL PROJECT	SHEET No.	TOTAL SHEETS
04	CC	680	0.0/R12.8	159	504

Han-Bin Liang 06/22/09
REGISTERED CIVIL ENGINEER DATE

2-1-10
PLANS APPROVAL DATE

REGISTERED PROFESSIONAL ENGINEER — HAN-BIN LIANG — No. C 48404 — Exp. 6/30/10 — CIVIL — STATE OF CALIFORNIA

THE STATE OF CALIFORNIA OR ITS OFFICERS OR AGENTS SHALL NOT BE RESPONSIBLE FOR THE ACCURACY OR COMPLETENESS OF ELECTRONIC COPIES OF THIS PLAN SHEET.

WRECO
1243 ALPINE ROAD
SUITE 108
WALNUT CREEK, CA 94596

CALTRANS
111 GRAND AVENUE
OAKLAND, CA 94612

DRAINAGE QUANTITIES

DRAINAGE SYSTEM No.	DRAINAGE UNIT	REMOVE DI (EA)	REMOVE CULVERT (LF)	REMOVE OVERSIDE DRAIN	ADJUST INLET (EA)	ADJUST FRAME AND COVER TO GRADE	Misc IRON AND STEEL (LB)	REMOVE CONCRETE (CY)	MINOR CONCRETE: Misc CONSTRUCTION (CY)	MINOR CONCRETE: MINOR STRUCTURE (CY)	12" PLASTIC PIPE DOWNDRAIN (LF)	18" APC (LF)	10" FLUME DOWNDRAIN (LF)	10" FLUME ANCHOR ASSEMBLY (EA)	12" SLOTTED CORRUGATED STEEL PIPE (N) (LF)	CAP DI (EA)	GRATED LINE DRAIN (LF)	TAPERED INLET	ENTRANCE TAPER (TYPE 1) (EA)	RSP (FACING, METHOD B) (CY)	RSP FABRIC (SQYD)	HOT MIX ASPHALT (Misc AREA)	TYPE 24-12 FRAME AND GRATE (N) (EA)	PIPE JOINT CLASSIFICATION (N)	MAXIMUM COVER (N) (LF)	HEIGHT OF DI (N) (LF)	DESCRIPTION	STATION	DRAINAGE PLAN SHEET No.	DRAINAGE SYSTEM No.	DRAINAGE UNIT
22	a				1																							Adj DI TO GRADE	4.14′ Rt A3 401+49.63	D-22	22	a
	b							1.15	1.15																			R & R SGD ON GRADE	4.14′ Rt A3 401+49.63			b
	c				1																							Adj DI TO GRADE	73.08′ Lt A3 403+85.21			c
	d							1.15	1.15																			R & R SGD ON GRADE	73.08′ Lt A3 403+85.21			d
	e				1																							Adj DI TO GRADE	68.96′ Rt A3 404+00.00			e
	f							1.15	1.15																			R & R SGD ON GRADE	68.96′ Rt A3 404+00.00			f
	g				1																							Adj DI TO GRADE	3.66′ Rt A3 408+00.97			g
	h							1.15	1.15																			R & R SGD ON GRADE	3.66′ Rt A3 408+00.97			h
	i				1																							Adj DI TO GRADE	82.76′ Lt A3 411+82.76			i
	j							1.15	1.15																			R & R SGD ON GRADE	82.76′ Lt A3 411+82.76			j
	k				1																							Adj DI TO GRADE	3.47′ Rt A3 411+63.12			k
22	l							1.15	1.15																			R & R SGD ON GRADE	3.47′ Rt A3 411+63.12	D-22	22	l
23	a				1																							Adj DI TO GRADE	2.83′ Rt A3 415+00.88	D-23	23	a
	b							1.15	1.15																			R & R SGD ON GRADE	2.83′ Rt A3 415+00.88			b
	c				1																							Adj DI TO GRADE	81.08′ Lt A3 417+17.92			c
	d							1.15	1.15																			R & R SGD ON GRADE	81.08′ Lt A3 417+17.92			d
	e											75.8													S	3.97		18" APC	81.08′ Lt A3 417+17.92 TO 80.06′ Lt A3 417+98.51			e
	f														52.0													12" SCSP	81.08′ Lt A3 417+17.92 TO 79.27′ Lt A3 417+74.38			f
	g					326			1.15	1.68										1				4.45				G2 DI w/ SGD	80.06′ Lt A3 417+98.51			g
	h				1																							Adj DI TO GRADE	4.29′ Rt A3 417+83.64			h
	i							1.55	1.55																			R & R SGD ON GRADE	4.29′ Rt A3 417+83.64			i
	j				1																							Adj DI TO GRADE	3.02′ Rt A3 418+32.08			j
	k							1.55	1.55																			R & R SGD ON GRADE	3.02′ Rt A3 418+32.08			k
	l				1																							Adj DI TO GRADE	79.99′ Lt A3 419+00.00			l
	m							1.55	1.55																			R & R SGD ON GRADE	79.99′ Lt A3 419+00.00			m
	n				1																							Adj DI TO GRADE	3.03′ Rt A3 419+00.69			n
	o							1.55	1.55																			R & R SGD ON GRADE	3.03′ Rt A3 419+00.69			o
	p				1																							Adj DI TO GRADE	82.83′ Rt A3 419+40.68			p
	q							1.55	1.55																			R & R SGD ON GRADE	82.83′ Rt A3 419+40.68			q
	r				1																							Adj DI TO GRADE	82.67′ Rt A3 420+35.17			r
	s							1.15	1.15																			R & R SGD ON GRADE	82.67′ Rt A3 420+35.17			s
23	t				1																							Adj DI TO GRADE	3.64′ Lt A3 420+79.37	D-23	23	t
					15		326	18.10	19.25	1.68		75.8			52.0					1								SHEET TOTAL				

DRAINAGE QUANTITIES DQ-6

STATE OF CALIFORNIA - DEPARTMENT OF TRANSPORTATION	RAJA PERIKETI		CS	11/25/09			
Caltrans	CHRIS SEWELL		RP	07/31/09			
CONSULTANT FUNCTIONAL SUPERVISOR: HAN-BIN LIANG	CALCULATED-DESIGNED BY		REVISED BY	DATE REVISED			
	CHECKED BY						

LAST REVISION DATE PLOTTED => 04-FEB-2010
TIME PLOTTED => 14:10
11-25-09

BORDER LAST REVISED 4/11/2008

RELATIVE BORDER SCALE IS IN INCHES 0 1 2 3

USERNAME => trpierce
DGN FILE => 4447Ouid006.dgn

CU 04236

EA 4470U1

Dist	COUNTY	ROUTE	POST MILES TOTAL PROJECT	SHEET No.	TOTAL SHEETS
04	CC	680	0.0/R12.8	160	504

Han-Bin Liang 06/22/09
REGISTERED CIVIL ENGINEER DATE

2-1-10
PLANS APPROVAL DATE

REGISTERED PROFESSIONAL ENGINEER — HAN-BIN LIANG — No. C 48404 — Exp. 6/30/10 — CIVIL — STATE OF CALIFORNIA

THE STATE OF CALIFORNIA OR ITS OFFICERS OR AGENTS SHALL NOT BE RESPONSIBLE FOR THE ACCURACY OR COMPLETENESS OF ELECTRONIC COPIES OF THIS PLAN SHEET.

WRECO
1243 ALPINE ROAD
SUITE 108
WALNUT CREEK, CA 94596

CALTRANS
111 GRAND AVENUE
OAKLAND, CA 94612

DRAINAGE QUANTITIES

DRAINAGE SYSTEM No.	DRAINAGE UNIT	REMOVE DI (EA)	REMOVE CULVERT (LF)	REMOVE OVERSIDE DRAIN (EA)	ADJUST INLET (EA)	ADJUST FRAME AND COVER TO GRADE (EA)	Misc IRON AND STEEL (LB)	REMOVE CONCRETE (CY)	MINOR CONCRETE: Misc CONSTRUCTION (CY)	MINOR CONCRETE: MINOR STRUCTURE (CY)	12" PLASTIC PIPE DOWNDRAIN (LF)	18" APC (LF)	10" FLUME DOWNDRAIN (LF)	10" FLUME ANCHOR ASSEMBLY (EA)	12" SLOTTED CORRUGATED STEEL PIPE (N) (LF)	CAP DI (EA)	GRATED LINE DRAIN (LF)	TAPERED INLET (EA)	ENTRANCE TAPER (TYPE 1) (EA)	RSP (FACING, METHOD B) (CY)	RSP FABRIC (SQYD)	HOT MIX ASPHALT (Misc AREA) (SQYD)	TYPE 24-12 FRAME AND GRATE (N) (EA)	PIPE JOINT CLASSIFICATION (N)	MAXIMUM COVER (N) (LF)	HEIGHT OF DI (N) (LF)	DESCRIPTION	STATION	DRAINAGE PLAN SHEET No.	DRAINAGE SYSTEM No.	DRAINAGE UNIT
23	u							1.15	1.15																			R&R SGD ON GRADE	3.64′ Lt A3 420+79.37	D-23	23	u
	v						326		1.15	5.25														1			12.9	G2 DI w/ SGD	85.27′ Lt A3 421+38.12			v
23	w														75.2													12" SCSP	85.27′ Lt A3 421+38.12 TO 84.41′ Lt A3 422+19.31	D-23	23	w
24	a			1																								REMOVE AC OVERSIDE DRAIN	68.88′ Lt A3 424+76.35 TO 84.68′ Lt A3 424+76.55	D-24	24	a
	b																					12.32						HMA OVERSIDE DRAIN	68.75′ Lt A3 426+48.01 TO 102.74′ Lt A3 426+47.71			b
	c																		1									ENTRANCE TAPER (TYPE 1)	70.18′ Lt A3 430+10.08			c
	d										65.8														DD	2.50		12" PP DD	70.16′ Lt A3 430+09.55 TO 121.62′ Lt A3 430+36.82			d
	e						326		1.15	1.06														1			3.50	G1 DI w/ PCC APRON	121.62′ Lt A3 430+36.82			e
	f											25.8													S	2.00		18" APC	121.62′ Lt A3 430+36.82 TO 107.12′ Lt A3 430+59.94			f
	g																	1										TAPERED INLET	71.95′ Rt A3 429+69.67			g
	h												63.0	6														FLUME DD w/ ANCHORS	71.95′ Rt A3 429+69.67 TO 121.00′ Rt A3 429+95.83			h
	i																			1.67	7.00							RSP	121.93′ Rt A3 429+95.83			i
	j				1																							Adj DI TO GRADE	68.44′ Lt A3 432+10.64			j
	k							1.15	1.15																			R&R SGD ON GRADE	68.44′ Lt A3 432+10.64			k
	l														56.0													12" SCSP	68.44′ Lt A3 432+10.64 TO 69.30′ Lt A3 432+67.72			l
	m											79.3													S	2.73		18" APC	68.44′ Lt A3 432+10.64 TO 69.32′ Lt A3 432+94.31			m
	n						326		1.15	1.57														1			4.00	G2 DI w/ SGD	69.32′ Lt A3 432+94.31			n
	o				1																							Adj DI TO GRADE	4.54′ Rt A3 431+98.38			o
	p							1.15	1.15																			R&R SGD ON GRADE	4.54′ Rt A3 431+98.38			p
	q				1																							Adj DI TO GRADE	69.90′ Rt A3 431+89.09			q
24	r							1.15	1.15																			R&R SGD ON GRADE	69.90′ Rt A3 431+89.09	D-24	24	r
25	a				1																							Adj DI TO GRADE	4.07′ Rt A3 439+59.53	D-25	25	a
	b							1.15	1.15																			R&R SGD ON GRADE	4.07′ Rt A3 439+59.53			b
	c				1																							Adj DI TO GRADE	22.28′ Rt PR4 439+49.61			c
	d							1.15	1.15																			R&R SGD ON GRADE	22.28′ Rt PR4 439+49.61			d
	e				1																							Adj DI TO GRADE	68.92′ Lt A3 444+05.95			e
	f							1.15	1.15																			R&R SGD ON GRADE	68.92′ Lt A3 444+05.95			f
	g				1																							Adj DI TO GRADE	4.89′ Lt A3 444+90.95			g
	h							1.15	1.15																			R&R SGD ON GRADE	4.89′ Lt A3 444+90.95			h
	i				1																							Adj DI TO GRADE	2.96′ Lt A3 445+40.00			i
25	j							1.15	1.15																			R&R SGD ON GRADE	2.96′ Lt A3 445+40.00	D-25	25	j
				1	8		978	10.35	13.80	7.88	65.8	105.1	63.0	6	131.2			1	1	1.67	7.00	12.32		3					SHEET TOTAL				

DRAINAGE QUANTITIES DQ-7

STATE OF CALIFORNIA - DEPARTMENT OF TRANSPORTATION	RAJA PERIKETI	CHRIS SEWELL	07/31/09	11/25/09
Caltrans	CALCULATED-DESIGNED BY	CHECKED BY	REVISED BY	DATE REVISED
CONSULTANT FUNCTIONAL SUPERVISOR: HAN-BIN LIANG	RP	CS		

LAST REVISION DATE PLOTTED => 16-FEB-2010
TIME PLOTTED => 11:13

BORDER LAST REVISED 4/11/2008 | RELATIVE BORDER SCALE IS IN INCHES 0 1 2 3 | USERNAME => s135318 | DGN FILE => 44470uid007.dgn | CU 04236 | EA 4470U1

Dist	COUNTY	ROUTE	POST MILES TOTAL PROJECT	SHEET No.	TOTAL SHEETS
04	CC	680	0.0/R12.8	161	504

Han-Bin Liang 06/22/09
REGISTERED CIVIL ENGINEER DATE

2-1-10
PLANS APPROVAL DATE

REGISTERED PROFESSIONAL ENGINEER HAN-BIN LIANG No. C 48404 Exp. 6/30/10 CIVIL STATE OF CALIFORNIA

THE STATE OF CALIFORNIA OR ITS OFFICERS OR AGENTS SHALL NOT BE RESPONSIBLE FOR THE ACCURACY OR COMPLETENESS OF ELECTRONIC COPIES OF THIS PLAN SHEET.

WRECO
1243 ALPINE ROAD
SUITE 108
WALNUT CREEK, CA 94596

CALTRANS
111 GRAND AVENUE
OAKLAND, CA 94612

DRAINAGE QUANTITIES

DRAINAGE SYSTEM No.	DRAINAGE UNIT	REMOVE DI (EA)	REMOVE CULVERT (LF)	REMOVE OVERSIDE DRAIN	ADJUST INLET (EA)	ADJUST FRAME AND COVER TO GRADE	Misc IRON AND STEEL (LB)	REMOVE CONCRETE (CY)	MINOR CONCRETE: Misc CONSTRUCTION (CY)	MINOR CONCRETE: MINOR STRUCTURE (CY)	12" PLASTIC PIPE DOWNDRAIN (LF)	18" APC (LF)	10" FLUME DOWNDRAIN (LF)	10" FLUME ANCHOR ASSEMBLY (EA)	12" SLOTTED CORRUGATED STEEL PIPE (N) (LF)	CAP DI (EA)	GRATED LINE DRAIN (LF)	TAPERED INLET ENTRANCE TAPER (TYPE 1) (EA)	RSP (FACING, METHOD B) (CY)	RSP FABRIC (SQYD)	HOT MIX ASPHALT (Misc AREA)	TYPE 24-12 FRAME AND GRATE (N) (EA)	PIPE JOINT CLASSIFICATION (N)	MAXIMUM COVER (N) (LF)	HEIGHT OF DI (N) (LF)	DESCRIPTION	STATION	DRAINAGE PLAN SHEET No.	DRAINAGE SYSTEM No.	DRAINAGE UNIT
25	k				1																						Adj DI TO GRADE	76.84′ R† A3 445+44.16	D-25	25	k
	l							1.15	1.15																		R&R SGD ON GRADE	76.84′ R† A3 445+44.16			l
	m				1																						Adj DI TO GRADE	69.53′ L† A3 450+51.03			m
	n							1.15	1.15																		R&R SGD ON GRADE	69.53′ L† A3 450+51.03			n
	o				1																						Adj DI TO GRADE	3.58′ R† A3 450+64.55			o
25	p							1.15	1.15																		R&R SGD ON GRADE	3.58′ R† A3 450+64.55	D-25	25	p
26	a				1																						Adj DI TO GRADE	69.05′ L† A3 454+58.45	D-26	26	a
	b							1.15	1.15																		R&R SGD ON GRADE	69.05′ L† A3 454+58.45			b
	c				1																						Adj DI TO GRADE	3.88′ R† A3 454+98.81			c
	d							1.15	1.15																		R&R SGD ON GRADE	3.88′ R† A3 454+98.81			d
	e				1																						Adj DI TO GRADE	69.25′ R† A3 455+14.88			e
	f							1.15	1.15																		R&R SGD ON GRADE	69.25′ R† A3 455+14.88			f
	g						326		1.15	1.57													1			4.00	G2 DI w/ SGD	69.46′ L† A3 457+51.79			g
	h											245.2				S	2.50										18" APC	69.46′ L† A3 457+51.79 TO 70.12′ L† A3 460+01.77			h
	i				1																						Adj DI TO GRADE	70.12′ L† A3 460+01.77			i
	j							1.15	1.15																		R&R SGD ON GRADE	70.12′ L† A3 460+01.77			j
	k				1																						Adj DI TO GRADE	68.70′ R† A3 460+24.09			k
	l							1.15	1.15																		R&R SGD ON GRADE	68.70′ R† A3 460+24.09			l
	m						326		1.15	1.57													1			4.01	G2 DI w/ SGD	67.74′ L† A3 461+99.87			m
	n											431.1				S	2.50										18" APC	67.74′ L† A3 461+99.87 TO 69.78′ L† A3 466+35.02			n
	o				1																						Adj DI TO GRADE	69.78′ L† A3 466+35.02			o
	p							1.15	1.15																		R&R SGD ON GRADE	69.78′ L† A3 466+35.02			p
	q				1																						Adj DI TO GRADE	69.09′ L† A3 467+21.76			q
	r							1.15	1.15																		R&R SGD ON GRADE	69.09′ L† A3 467+21.76			r
	s				1																						Adj DI TO GRADE	3.87′ R† A3 467+50.00			s
26	†							1.15	1.15																		R&R SGD ON GRADE	3.87′ R† A3 467+50.00	D-26	26	†
27	a				1																						Adj DI TO GRADE	82.44′ R† A3 470+92.86	D-27	27	a
	b							1.15	1.15																		R&R SGD ON GRADE	82.44′ R† A3 470+92.86			b
	c				1																						Adj DI TO GRADE	69.09′ L† A3 471+79.84			c
	d							1.15	1.15																		R&R SGD ON GRADE	69.09′ L† A3 471+79.84			d
27	e				1																						Adj DI TO GRADE	0.00′ R† A3 474+92.96	D-27	27	e
					14		652	14.95	17.25	3.14		676.3											2				SHEET TOTAL				

DRAINAGE QUANTITIES DQ-8

STATE OF CALIFORNIA - DEPARTMENT OF TRANSPORTATION
Caltrans

CONSULTANT FUNCTIONAL SUPERVISOR: HAN-BIN LIANG

CALCULATED-DESIGNED BY: RAJA PERIKETI
CHECKED BY: CHRIS SEWELL

REVISED BY	DATE REVISED
RP	07/31/09
CS	11/25/09

LAST REVISION DATE PLOTTED => 04-FEB-2010
TIME PLOTTED => 14:10
11-25-09

BORDER LAST REVISED 4/11/2008

RELATIVE BORDER SCALE IS IN INCHES 0 1 2 3

USERNAME => trpierce
DGN FILE => 4447Ouid008.dgn

CU 04236

EA 4470U1

Dist	COUNTY	ROUTE	POST MILES TOTAL PROJECT	SHEET No.	TOTAL SHEETS
04	CC	680	0.0/R12.8	162	504

Han-Bin Liang 06/22/09
REGISTERED CIVIL ENGINEER DATE

2-1-10
PLANS APPROVAL DATE

REGISTERED PROFESSIONAL ENGINEER HAN-BIN LIANG No. C 48404 Exp. 6/30/10 CIVIL STATE OF CALIFORNIA

THE STATE OF CALIFORNIA OR ITS OFFICERS OR AGENTS SHALL NOT BE RESPONSIBLE FOR THE ACCURACY OR COMPLETENESS OF ELECTRONIC COPIES OF THIS PLAN SHEET.

WRECO
1243 ALPINE ROAD
SUITE 108
WALNUT CREEK, CA 94596

CALTRANS
111 GRAND AVENUE
OAKLAND, CA 94612

DRAINAGE QUANTITIES

DRAINAGE SYSTEM No.	DRAINAGE UNIT	REMOVE DI (EA)	REMOVE CULVERT (LF)	REMOVE OVERSIDE DRAIN	ADJUST INLET (EA)	ADJUST FRAME AND COVER TO GRADE	Misc IRON AND STEEL (LB)	REMOVE CONCRETE (CY)	MINOR CONCRETE: Misc CONSTRUCTION (CY)	MINOR CONCRETE: MINOR STRUCTURE (CY)	12" PLASTIC PIPE DOWNDRAIN (LF)	18" APC (LF)	10" FLUME DOWNDRAIN (LF)	10" FLUME ANCHOR ASSEMBLY (EA)	12" SLOTTED CORRUGATED STEEL PIPE (N) (LF)	CAP DI (EA)	GRATED LINE DRAIN (LF)	TAPERED INLET	ENTRANCE TAPER (TYPE 1) (EA)	RSP (FACING, METHOD B) (CY)	RSP FABRIC (SQYD)	HOT MIX ASPHALT (Misc AREA)	TYPE 24-12 FRAME AND GRATE (N) (EA)	PIPE JOINT CLASSIFICATION (N)	MAXIMUM COVER (N) (LF)	HEIGHT OF DI (N) (LF)	DESCRIPTION	STATION	DRAINAGE PLAN SHEET No.	DRAINAGE SYSTEM No.	DRAINAGE UNIT
27	f							1.15	1.15																			R&R SGD ON GRADE	0.00′ Rt A3 474+92.96	D-27	27	f
	g				1																							Adj DI TO GRADE	73.31′ Rt A3 475+39.36			g
	h							1.15	1.15																			R&R SGD ON GRADE	73.31′ Rt A3 475+39.36			h
	i				1																							Adj DI TO GRADE	68.93′ Lt A3 481+47.51			i
	j							1.15	1.15																			R&R SGD ON GRADE	68.93′ Lt A3 481+47.51			j
	k				1																							Adj DI TO GRADE	3.96′ Rt A3 481+49.14			k
	l							1.15	1.15																			R&R SGD ON GRADE	3.96′ Rt A3 481+49.14			l
	m				1																							Adj DI TO GRADE	71.09′ Rt A3 481+48.27			m
	n							1.15	1.15																			R&R SGD ON GRADE	71.09′ Rt A3 481+48.27			n
	o				1																							Adj DI TO GRADE	69.46′ Lt A3 485+26.54			o
	p							1.15	1.15																			R&R SGD ON GRADE	69.46′ Lt A3 485+26.54			p
	q				1																							Adj DI TO GRADE	3.97′ Rt A3 485+28.81			q
	r							1.15	1.15																			R&R SGD ON GRADE	3.97′ Rt A3 485+28.81			r
	s				1																							Adj DI TO GRADE	68.91′ Lt A3 486+52.46			s
	t							1.15	1.15																			R&R SGD ON GRADE	68.91′ Lt A3 486+52.46			t
	u				1																							Adj DI TO GRADE	3.01′ Rt A3 486+66.07			u
	v							1.15	1.15																			R&R SGD ON GRADE	3.01′ Rt A3 486+66.07			v
	w						326		1.15	1.57														1			4.00	G2 DI w/ SGD	70.12′ Rt A3 485+93.10			w
	x											73.7													S	2.50		18" APC	70.12′ Rt A3 485+93.10 TO 70.38′ Rt A3 486+71.90			x
	y				1																							Adj DI TO GRADE	70.38′ Rt A3 486+71.90			y
	z							1.15	1.15																			R&R SGD ON GRADE	70.38′ Rt A3 486+71.90			z
	aa				1																							Adj DI TO GRADE	68.79′ Lt A3 490+49.74			aa
	bb							1.15	1.15																			R&R SGD ON GRADE	68.79′ Lt A3 490+49.74			bb
	cc				1																							Adj DI TO GRADE	0.87′ Lt A3 492+42.24			cc
	dd							1.15	1.15																			R&R SGD ON GRADE	0.87′ Lt A3 492+42.24			dd
	ee				1																							Adj DI TO GRADE	68.63′ Lt A3 492+78.16			ee
	ff							1.55	1.55																			R&R SGD IN GRADE SAG	68.63′ Lt A3 492+78.16			ff
	gg				1																							Adj DI TO GRADE	68.82′ Lt A4 492+99.64			gg
	hh							1.55	1.55																			R&R SGD IN GRADE SAG	68.82′ Lt A4 492+99.64			hh
	ii				1																							Adj DI TO GRADE	68.76′ Lt A4 493+22.92			ii
27	jj							1.55	1.55																			R&R SGD IN GRADE SAG	68.76′ Lt A4 493+22.92	D-27	27	jj
					14		326	18.45	19.60	1.57		73.7												1				SHEET TOTAL				

DRAINAGE QUANTITIES DQ-9

STATE OF CALIFORNIA - DEPARTMENT OF TRANSPORTATION	CONSULTANT FUNCTIONAL SUPERVISOR	CALCULATED-DESIGNED BY	CHECKED BY	REVISED BY	DATE REVISED
Caltrans	HAN-BIN LIANG	RAJA PERIKETI	CHRIS SEWELL	RP	07/31/09
				CS	11/25/09

LAST REVISION DATE PLOTTED => 04-FEB-2010
TIME PLOTTED => 14:10

Dist	COUNTY	ROUTE	POST MILES TOTAL PROJECT	SHEET No.	TOTAL SHEETS
04	CC	680	0.0/R12.8	163	504

Han-Bin Liang 06/22/09
REGISTERED CIVIL ENGINEER DATE

HAN-BIN LIANG No. C 48404 Exp. 6/30/10 CIVIL — REGISTERED PROFESSIONAL ENGINEER — STATE OF CALIFORNIA

2-1-10
PLANS APPROVAL DATE

THE STATE OF CALIFORNIA OR ITS OFFICERS OR AGENTS SHALL NOT BE RESPONSIBLE FOR THE ACCURACY OR COMPLETENESS OF ELECTRONIC COPIES OF THIS PLAN SHEET.

WRECO
1243 ALPINE ROAD
SUITE 108
WALNUT CREEK, CA 94596

CALTRANS
111 GRAND AVENUE
OAKLAND, CA 94612

DRAINAGE QUANTITIES

DRAINAGE SYSTEM No.	DRAINAGE UNIT	REMOVE DI (EA)	REMOVE CULVERT (LF)	REMOVE OVERSIDE DRAIN	ADJUST INLET (EA)	ADJUST FRAME AND COVER TO GRADE	Misc IRON AND STEEL (LB)	REMOVE CONCRETE (CY)	MINOR CONCRETE: Misc CONSTRUCTION (CY)	MINOR CONCRETE: MINOR STRUCTURE (CY)	12" PLASTIC PIPE DOWNDRAIN (LF)	18" APC (LF)	10" FLUME DOWNDRAIN (LF)	10" FLUME ANCHOR ASSEMBLY (EA)	12" SLOTTED CORRUGATED STEEL PIPE (N) (LF)	CAP DI (EA)	GRATED LINE DRAIN (LF)	TAPERED INLET	ENTRANCE TAPER (TYPE 1) (EA)	RSP (FACING, METHOD B) (CY)	RSP FABRIC (SQYD)	HOT MIX ASPHALT (Misc AREA)	TYPE 24-12 FRAME AND GRATE (N) (EA)	PIPE JOINT CLASSIFICATION (N)	MAXIMUM COVER (N) (LF)	HEIGHT OF DI (N) (LF)	DESCRIPTION	STATION	DRAINAGE PLAN SHEET No.	DRAINAGE SYSTEM No.	DRAINAGE UNIT
27	kk				1																							Adj DI TO GRADE	0.43' Lt A4 492+92.37	D-27	27	kk
	ll							1.55	1.55																			R&R SGD IN GRADE SAG	0.43' Lt A4 492+92.37			ll
	mm				1																							Adj DI TO GRADE	0.53' Lt A4 492+64.89			mm
	nn							1.55	1.55																			R&R SGD IN GRADE SAG	0.53' Lt A4 492+64.89			nn
	oo				1																							Adj DI TO GRADE	72.43' Rt A4 493+48.94			oo
	pp							1.15	1.15																			R&R SGD ON GRADE	72.43' Rt A4 493+48.94			pp
	qq				1																							Adj DI TO GRADE	1.45' Rt A4 495+52.48			qq
27	rr							1.15	1.15																			R&R SGD ON GRADE	1.45' Rt A4 495+52.48	D-27	27	rr
28	a				1																							Adj DI TO GRADE	3.24' Lt A4 497+49.90	D-28	28	a
	b							1.15	1.15																			R&R SGD ON GRADE	3.24' Lt A4 497+49.90			b
	c				1																							Adj DI TO GRADE	68.81' Lt A4 500+53.34			c
	d							1.15	1.15																			R&R SGD ON GRADE	68.81' Lt A4 500+53.34			d
	e					1																						Adj MH TO GRADE	6.16' Lt A4 500+86.61			e
	f				1																							Adj DI TO GRADE	2.96' Lt A4 501+50.52			f
	g							1.15	1.15																			R&R SGD ON GRADE	2.96' Lt A4 501+50.52			g
	h				1																							Adj DI TO GRADE	70.74' Rt A4 501+51.11			h
	i							1.15	1.15																			R&R SGD ON GRADE	70.74' Rt A4 501+51.11			i
	j				1																							Adj DI TO GRADE	3.10' Lt A4 502+50.26			j
	k							1.55	1.55																			R&R SGD IN GRADE SAG	3.10' Lt A4 502+50.26			k
	l				1																							Adj DI TO GRADE	3.27' Lt A4 503+00.57			l
	m							1.55	1.55																			R&R SGD IN GRADE SAG	3.27' Lt A4 503+00.57			m
	n				1																							Adj DI TO GRADE	1.49' Lt A4 506+10.63			n
	o							1.15	1.15																			R&R SGD ON GRADE	1.49' Lt A4 506+10.63			o
	p				1																							Adj DI TO GRADE	70.39' Rt A4 505+34.56			p
	q							1.15	1.15																			R&R SGD ON GRADE	70.39' Rt A4 505+34.56			q
	r				1																							Adj DI TO GRADE	70.49' Rt A4 506+10.63			r
	s							1.15	1.15																			R&R SGD ON GRADE	70.49' Rt A4 506+10.63			s
	t				1																							Adj DI TO GRADE	70.77' Rt AR 506+67.84			t
	u							1.15	1.15																			R&R SGD ON GRADE	70.77' Rt A4 506+67.84			u
	v				1																							Adj DI TO GRADE	69.17' Lt A4 508+08.22			v
28	w							1.15	1.15																			R&R SGD ON GRADE	69.17' Lt A4 508+08.22	D-28	28	w
					15	1		18.85	18.85																			SHEET TOTAL				

DRAINAGE QUANTITIES **DQ-10**

STATE OF CALIFORNIA - DEPARTMENT OF TRANSPORTATION
Caltrans

CONSULTANT FUNCTIONAL SUPERVISOR: HAN-BIN LIANG

CALCULATED-DESIGNED BY: RAJA PERIKETI
CHECKED BY: CHRIS SEWELL

REVISED BY	DATE REVISED
RP	07/31/09
CS	11/25/09

LAST REVISION DATE PLOTTED => 04-FEB-2010
TIME PLOTTED => 14:11

BORDER LAST REVISED 4/11/2008

RELATIVE BORDER SCALE IS IN INCHES 0 1 2 3

USERNAME => trpierce
DGN FILE => 4447Ouid010.dgn

CU 04236

EA 4470U1

Dist	COUNTY	ROUTE	POST MILES TOTAL PROJECT	SHEET No.	TOTAL SHEETS
04	CC	680	0.0/R12.8	164	504

Han-Bin Liang 06/22/09
REGISTERED CIVIL ENGINEER DATE

2-1-10
PLANS APPROVAL DATE

REGISTERED PROFESSIONAL ENGINEER — HAN-BIN LIANG — No. C 48404 — Exp. 6/30/10 — CIVIL — STATE OF CALIFORNIA

THE STATE OF CALIFORNIA OR ITS OFFICERS OR AGENTS SHALL NOT BE RESPONSIBLE FOR THE ACCURACY OR COMPLETENESS OF ELECTRONIC COPIES OF THIS PLAN SHEET.

WRECO
1243 ALPINE ROAD
SUITE 108
WALNUT CREEK, CA 94596

CALTRANS
111 GRAND AVENUE
OAKLAND, CA 94612

DRAINAGE QUANTITIES

DRAINAGE SYSTEM No.	DRAINAGE UNIT	REMOVE DI (EA)	REMOVE CULVERT (LF)	REMOVE OVERSIDE DRAIN	ADJUST INLET (EA)	ADJUST FRAME AND COVER TO GRADE	Misc IRON AND STEEL (LB)	REMOVE CONCRETE (CY)	MINOR CONCRETE: Misc CONSTRUCTION (CY)	MINOR CONCRETE: MINOR STRUCTURE (CY)	12" PLASTIC PIPE DOWNDRAIN (LF)	18" APC (LF)	10" FLUME DOWNDRAIN (LF)	10" FLUME ANCHOR ASSEMBLY (EA)	12" SLOTTED CORRUGATED STEEL PIPE (N) (LF)	CAP DI (EA)	GRATED LINE DRAIN (LF)	TAPERED INLET	ENTRANCE TAPER (TYPE 1) (EA)	RSP (FACING, METHOD B) (CY)	RSP FABRIC (SQYD)	HOT MIX ASPHALT (Misc AREA)	TYPE 24-12 FRAME AND GRATE (N) (EA)	PIPE JOINT CLASSIFICATION (N)	MAXIMUM COVER (N) (LF)	HEIGHT OF DI (N) (LF)	DESCRIPTION	STATION	DRAINAGE PLAN SHEET No.	DRAINAGE SYSTEM No.	DRAINAGE UNIT
28	x				1																							Adj DI TO GRADE	69.03' Lt A4 514+75.63	D-28	28	x
	y							1.15	1.15																			R&R SGD ON GRADE	69.03' Lt A4 514+75.63			y
	z				1																							Adj DI TO GRADE	4.11' Rt A4 514+75.90			z
	aa							1.15	1.15																			R&R SGD ON GRADE	4.11' Rt A4 514+75.90			aa
	bb				1																							Adj DI TO GRADE	3.17' Lt A4 519+66.67			bb
	cc							1.15	1.15																			R&R SGD ON GRADE	3.17' Lt A4 519+66.67			cc
	dd				1																							Adj DI TO GRADE	69.67' Lt A4 520+08.77			dd
	ee							1.15	1.15																			R&R SGD ON GRADE	69.67' Lt A4 520+08.77			ee
	ff				1																							Adj DI TO GRADE	68.83' Lt A4 523+58.14			ff
	gg							1.55	1.55																			R&R SGD IN GRADE SAG	68.83' Lt A4 523+58.14			gg
	hh				1																							Adj DI TO GRADE	68.94' Lt A4 524+59.30			hh
	ii							1.55	1.55																			R&R SGD IN GRADE SAG	68.94' Lt A4 524+59.30			ii
	jj				1																							Adj DI TO GRADE	3.16' Lt A4 524+38.76			jj
	kk							1.55	1.55																			R&R SGD IN GRADE SAG	3.16' Lt A4 524+38.76			kk
	ll				1																							Adj DI TO GRADE	2.97' Lt A4 524+89.56			ll
28	mm							1.55	1.55																			R&R SGD IN GRADE SAG	2.97' Lt A4 524+89.56	D-28	28	mm
29	a				1																							Adj DI TO GRADE	3.19' Lt A4 527+00.41	D-29	29	a
	b							1.15	1.15																			R&R SGD ON GRADE	3.19' Lt A4 527+00.41			b
	c					1																						Adj MH TO GRADE	5.01' Lt A4 528+00.00			c
	d				1																							Adj DI TO GRADE	3.03' Lt A4 530+49.80			d
	e							1.15	1.15																			R&R SGD ON GRADE	3.03' Lt A4 530+49.80			e
	f					1																						Adj MH TO GRADE	6.71' Lt A4 530+97.42			f
	g				1																							Adj DI TO GRADE	3.11' Lt A4 531+99.45			g
	h							1.15	1.15																			R&R SGD ON GRADE	3.11' Lt A4 531+99.45			h
	i				1																							Adj DI TO GRADE	2.83' Lt A4 533+78.29			i
	j							1.15	1.15																			R&R SGD ON GRADE	2.83' Lt A4 533+78.29			j
	k				1																							Adj DI TO GRADE	75.34' Rt A4 534+10.81			k
	l							1.15	1.15																			R&R SGD ON GRADE	75.34' Rt A4 534+10.81			l
	m				1																							Adj DI TO GRADE	2.85' Lt A4 536+00.38			m
29	n							1.15	1.15																			R&R SGD ON GRADE	2.85' Lt A4 536+00.38	D-29	29	n
					14	2		17.70	17.70																			SHEET TOTAL				

DRAINAGE QUANTITIES DQ-11

STATE OF CALIFORNIA - DEPARTMENT OF TRANSPORTATION — Caltrans

	REVISED BY	DATE REVISED
	CS	11/25/09
	RP	07/31/09

CALCULATED-DESIGNED BY: RAJA PERIKETI
CHECKED BY: CHRIS SEWELL
CONSULTANT FUNCTIONAL SUPERVISOR: HAN-BIN LIANG

LAST REVISION DATE PLOTTED => 04-FEB-2010
LAST REVISION TIME PLOTTED => 14:11
11-25-09

BORDER LAST REVISED 4/11/2008
RELATIVE BORDER SCALE IS IN INCHES 0 1 2 3
USERNAME => trpierce
DGN FILE => 4447Ouid011.dgn
CU 04236
EA 4470U1

Dist	COUNTY	ROUTE	POST MILES TOTAL PROJECT	SHEET No.	TOTAL SHEETS
04	CC	680	0.0/R12.8	165	504

Han-Bin Liang 06/22/09
REGISTERED CIVIL ENGINEER DATE

HAN-BIN LIANG No. C 48404 Exp. 6/30/10 CIVIL — REGISTERED PROFESSIONAL ENGINEER — STATE OF CALIFORNIA

2-1-10
PLANS APPROVAL DATE

THE STATE OF CALIFORNIA OR ITS OFFICERS OR AGENTS SHALL NOT BE RESPONSIBLE FOR THE ACCURACY OR COMPLETENESS OF ELECTRONIC COPIES OF THIS PLAN SHEET.

WRECO
1243 ALPINE ROAD
SUITE 108
WALNUT CREEK, CA 94596

CALTRANS
111 GRAND AVENUE
OAKLAND, CA 94612

DRAINAGE QUANTITIES

DRAINAGE SYSTEM No.	DRAINAGE UNIT	REMOVE DI (EA)	REMOVE CULVERT (LF)	REMOVE OVERSIDE DRAIN	ADJUST INLET (EA)	ADJUST FRAME AND COVER TO GRADE	Misc IRON AND STEEL (LB)	REMOVE CONCRETE (CY)	MINOR CONCRETE Misc CONSTRUCTION (CY)	MINOR CONCRETE MINOR STRUCTURE (CY)	12" PLASTIC PIPE DOWNDRAIN (LF)	18" APC (LF)	10" FLUME DOWNDRAIN (LF)	10" FLUME ANCHOR ASSEMBLY (EA)	12" SLOTTED CORRUGATED STEEL PIPE (N) (LF)	CAP DI (EA)	GRATED LINE DRAIN (LF)	TAPERED INLET	ENTRANCE TAPER (TYPE 1) (EA)	RSP (FACING, METHOD B) (CY)	RSP FABRIC (SQYD)	HOT MIX ASPHALT (Misc AREA)	TYPE 24-12 FRAME AND GRATE (N) (EA)	PIPE JOINT CLASSIFICATION (N)	MAXIMUM COVER (N) (LF)	HEIGHT OF DI (N) (LF)	DESCRIPTION	STATION	DRAINAGE PLAN SHEET No.	DRAINAGE SYSTEM No.	DRAINAGE UNIT
30	a				1																							Adj DI TO GRADE	2.93' Lt A4 539+00.00	D-30	30	a
	b							1.15	1.15																			R&R SGD ON GRADE	2.93' Lt A4 539+00.00			b
	c				1																							Adj DI TO GRADE	2.90' Lt A4 541+99.38			c
	d							1.15	1.15																			R&R SGD ON GRADE	2.90' Lt A4 541+99.38			d
	e				1																							Adj DI TO GRADE	3.09' Lt A4 544+00.00			e
	f							1.55	1.55																			R&R SGD IN GRADE SAG	3.09' Lt A4 544+00.00			f
	g				1																							Adj DI TO GRADE	3.01' Lt A4 544+50.20			g
30	h							1.55	1.55																			R&R SGD IN GRADE SAG	3.01' Lt A4 544+50.20	D-30	30	h
31	a				1																							Adj DI TO GRADE	3.56' Lt A4 545+74.41	D-31	31	a
	b							1.15	1.15																			R&R SGD ON GRADE	3.56' Lt A4 545+74.41			b
	c				1																							Adj DI TO GRADE	5.20' Rt A4 552+37.84			c
	d							1.15	1.15																			R&R SGD ON GRADE	5.20' Rt A4 552+37.84			d
	e				1																							Adj DI TO GRADE	3.17' Rt A4 552+87.49			e
31	f							1.15	1.15																			R&R SGD ON GRADE	3.17' Rt A4 552+87.49	D-31	31	f
32	a				1																							Adj DI TO GRADE	68.74' Lt A4 554+06.07	D-32	32	a
	b							1.15	1.15																			R&R SGD ON GRADE	68.74' Lt A4 554+06.07			b
	c				1																							Adj DI TO GRADE	69.31' Lt A4 554+51.12			c
	d							1.15	1.15																			R&R SGD ON GRADE	69.31' Lt A4 554+51.12			d
	e				1																							Adj DI TO GRADE	3.33' Rt A4 554+50.04			e
	f							1.15	1.15																			R&R SGD ON GRADE	3.33' Rt A4 554+50.04			f
	g				1																							Adj DI TO GRADE	3.13' Rt A4 557+01.20			g
	h							1.15	1.15																			R&R SGD ON GRADE	3.13' Rt A4 557+01.20			h
	i				1																							Adj DI TO GRADE	3.53' Rt A4 559+00.96			i
	j							1.15	1.15																			R&R SGD ON GRADE	3.53' Rt A4 559+00.96			j
	k				1																							Adj DI TO GRADE	75.94' Lt A4 562+12.60			k
	l							1.15	1.15																			R&R SGD ON GRADE	75.94' Lt A4 562+12.60			l
	m				1																							Adj DI TO GRADE	3.12' Rt A4 562+01.06			m
	n							1.15	1.15																			R&R SGD ON GRADE	3.12' Rt A4 562+01.06			n
	o				1																							Adj DI TO GRADE	70.28' Lt "A3" 565+51.59			o
	p							1.15	1.15																			R&R SGD ON GRADE	70.28' Lt "A3" 565+51.59			p
32	q				1																							Adj DI TO GRADE	2.62' Rt "A3" 565+51.59	D-32	32	q
					16			18.05	18.05																			SHEET TOTAL				

DRAINAGE QUANTITIES DQ-12

STATE OF CALIFORNIA - DEPARTMENT OF TRANSPORTATION
Caltrans

CONSULTANT FUNCTIONAL SUPERVISOR: HAN-BIN LIANG

CALCULATED-DESIGNED BY: RAJA PERIKETI
CHECKED BY: CHRIS SEWELL

REVISED BY	DATE REVISED
RP	07/31/09
CS	11/25/09

LAST REVISION DATE PLOTTED => 04-FEB-2010
TIME PLOTTED => 14:11

BORDER LAST REVISED 4/11/2008

RELATIVE BORDER SCALE IS IN INCHES 0 1 2 3

USERNAME => trpierce
DGN FILE => 44470uid012.dgn

CU 04236

EA 4470U1

Dist	COUNTY	ROUTE	POST MILES TOTAL PROJECT	SHEET No.	TOTAL SHEETS
04	CC	680	0.0/R12.8	166	504

Han-Bin Liang 06/22/09
REGISTERED CIVIL ENGINEER DATE

2-1-10
PLANS APPROVAL DATE

REGISTERED PROFESSIONAL ENGINEER — HAN-BIN LIANG — No. C 48404 — Exp. 6/30/10 — CIVIL — STATE OF CALIFORNIA

THE STATE OF CALIFORNIA OR ITS OFFICERS OR AGENTS SHALL NOT BE RESPONSIBLE FOR THE ACCURACY OR COMPLETENESS OF ELECTRONIC COPIES OF THIS PLAN SHEET.

WRECO
1243 ALPINE ROAD
SUITE 108
WALNUT CREEK, CA 94596

CALTRANS
111 GRAND AVENUE
OAKLAND, CA 94612

DRAINAGE QUANTITIES

DRAINAGE SYSTEM No.	DRAINAGE UNIT	REMOVE DI (EA)	REMOVE CULVERT (LF)	REMOVE OVERSIDE DRAIN	ADJUST INLET (EA)	ADJUST FRAME AND COVER TO GRADE	Misc IRON AND STEEL (LB)	REMOVE CONCRETE (CY)	MINOR CONCRETE: Misc CONSTRUCTION (CY)	MINOR CONCRETE: MINOR STRUCTURE (CY)	12" PLASTIC PIPE DOWNDRAIN (LF)	18" APC (LF)	10" FLUME DOWNDRAIN (LF)	10" FLUME ANCHOR ASSEMBLY (EA)	12" SLOTTED CORRUGATED STEEL PIPE (N) (LF)	CAP DI (EA)	GRATED LINE DRAIN (LF)	TAPERED INLET	ENTRANCE TAPER (TYPE 1) (EA)	RSP (FACING, METHOD B) (CY)	RSP FABRIC (SQYD)	HOT MIX ASPHALT (Misc AREA)	TYPE 24-12 FRAME AND GRATE (N) (EA)	PIPE JOINT CLASSIFICATION (N)	MAXIMUM COVER (N) (LF)	HEIGHT OF DI (N) (LF)	DESCRIPTION	STATION	DRAINAGE PLAN SHEET No.	DRAINAGE SYSTEM No.	DRAINAGE UNIT
32	r							1.15	1.15																			R&R SGD ON GRADE	2.62' Rt A3 565+51.59	D-32	32	r
	s				1																							Adj DI TO GRADE	2.96' Rt A3 565+88.29			s
	t							1.55	1.55																			R&R SGD IN GRADE SAG	2.96' Rt A3 565+88.29			t
	u				1																							Adj DI TO GRADE	2.99' Rt A3 566+39.56			u
	v							1.55	1.55																			R&R SGD IN GRADE SAG	2.99' Rt A3 566+39.56			v
	w				1																							Adj DI TO GRADE	70.06' Lt A3 567+70.75			w
	x							1.15	1.15																			R&R SGD ON GRADE	70.06' Lt A3 567+70.75			x
	y				1																							Adj DI TO GRADE	69.84' Lt A3 569+03.32			y
	z							1.15	1.15																			R&R SGD ON GRADE	69.84' Lt A3 569+03.32			z
	aa				1																							Adj DI TO GRADE	2.95' Rt A3 568+89.90			aa
	bb							1.15	1.15																			R&R SGD ON GRADE	2.95' Rt A3 568+89.90			bb
	cc				1																							Adj DI TO GRADE	70.93' Rt A3 567+91.59			cc
	dd							1.15	1.15																			R&R SGD ON GRADE	70.93' Rt A3 567+91.59			dd
	ee					1																						Adj MH TO GRADE	4.63' Lt A3 569+99.80			ee
	ff				1																							Adj DI TO GRADE	68.92' Lt A3 573+00.14			ff
	gg							1.15	1.15																			R&R SGD ON GRADE	68.92' Lt A3 573+00.14			gg
	hh				1																							Adj DI TO GRADE	2.91' Rt A3 573+17.26			hh
32	ii							1.15	1.15																			R&R SGD ON GRADE	2.91' Rt A3 573+17.26	D-32	32	ii
33	a					1																						Adj MH TO GRADE	4.22' Lt A3 577+01.55	D-33	33	a
	b				1																							Adj DI TO GRADE	74.21' Lt A3 578+00.83			b
	c							1.15	1.15																			R&R SGD ON GRADE	74.21' Lt A3 578+00.83			c
	d				1																							Adj DI TO GRADE	2.92' Lt A3 578+00.00			d
	e							1.15	1.15																			R&R SGD ON GRADE	2.92' Lt A3 578+00.00			e
	f					1																						Adj MH TO GRADE	4.17' Lt A3 579+02.46			f
	g				1																							Adj DI TO GRADE	3.12' Rt A3 583+01.47			g
	h							1.15	1.15																			R&R SGD ON GRADE	3.12' Rt A3 583+01.47			h
	i				1																							Adj DI TO GRADE	5.30' Rt A3 583+65.51			i
	j							1.15	1.15																			R&R SGD ON GRADE	5.30' Rt A3 583+65.51			j
	k				1																							Adj DI TO GRADE	3.23' Rt A3 584+16.35			k
	l							1.15	1.15																			R&R SGD ON GRADE	3.23' Rt A3 584+16.35			l
	m				1																							Adj DI TO GRADE	4.48' Rt A3 587+55.82			m
33	n							1.15	1.15																			R&R SGD ON GRADE	4.48' Rt A3 587+55.82	D-33	33	n
					14	3		18.05	18.05																			SHEET TOTAL				

DRAINAGE QUANTITIES DQ-13

CALCULATED-DESIGNED BY	RAJA PERIKETI	REVISED BY	RP	CS	
CHECKED BY	CHRIS SEWELL	DATE REVISED	07/31/09	11/25/09	

CONSULTANT FUNCTIONAL SUPERVISOR: HAN-BIN LIANG

STATE OF CALIFORNIA - DEPARTMENT OF TRANSPORTATION — Caltrans

LAST REVISION DATE PLOTTED => 04-FEB-2010
TIME PLOTTED => 14:11
11-25-09

BORDER LAST REVISED 4/11/2008

RELATIVE BORDER SCALE IS IN INCHES 0 1 2 3

USERNAME => trpierce
DGN FILE => 4447Ouid013.dgn

CU 04236

EA 4470U1

Dist	COUNTY	ROUTE	POST MILES TOTAL PROJECT	SHEET No.	TOTAL SHEETS
04	CC	680	0.0/R12.8	167	504

Han-Bin Liang 06/22/09
REGISTERED CIVIL ENGINEER DATE

2-1-10
PLANS APPROVAL DATE

REGISTERED PROFESSIONAL ENGINEER
HAN-BIN LIANG
No. C 48404
Exp. 6/30/10
CIVIL
STATE OF CALIFORNIA

THE STATE OF CALIFORNIA OR ITS OFFICERS OR AGENTS SHALL NOT BE RESPONSIBLE FOR THE ACCURACY OR COMPLETENESS OF ELECTRONIC COPIES OF THIS PLAN SHEET.

WRECO
1243 ALPINE ROAD
SUITE 108
WALNUT CREEK, CA 94596

CALTRANS
111 GRAND AVENUE
OAKLAND, CA 94612

DRAINAGE QUANTITIES

DRAINAGE SYSTEM No.	DRAINAGE UNIT	REMOVE DI (EA)	REMOVE CULVERT (LF)	REMOVE OVERSIDE DRAIN	ADJUST INLET (EA)	ADJUST FRAME AND COVER TO GRADE	Misc IRON AND STEEL (LB)	REMOVE CONCRETE (CY)	MINOR CONCRETE: Misc CONSTRUCTION (CY)	MINOR CONCRETE: MINOR STRUCTURE (CY)	12" PLASTIC PIPE DOWNDRAIN (LF)	18" APC (LF)	10" FLUME DOWNDRAIN (LF)	10" FLUME ANCHOR ASSEMBLY (EA)	12" SLOTTED CORRUGATED STEEL PIPE (N) (LF)	CAP DI (EA)	GRATED LINE DRAIN (LF)	TAPERED INLET	ENTRANCE TAPER (TYPE 1) (EA)	RSP (FACING, METHOD B) (CY)	RSP FABRIC (SQYD)	HOT MIX ASPHALT (Misc AREA)	TYPE 24-12 FRAME AND GRATE (N) (EA)	PIPE JOINT CLASSIFICATION (N)	MAXIMUM COVER (N) (LF)	HEIGHT OF DI (N) (LF)	DESCRIPTION	STATION	DRAINAGE PLAN SHEET No.	DRAINAGE SYSTEM No.	DRAINAGE UNIT
33	o				1																							Adj DI TO GRADE	6.03′ Lt A3 588+96.44	D-33	33	o
	p							1.15	1.15																			R&R SGD ON GRADE	6.03′ Lt A3 588+96.44			p
34	a				1																							Adj DI TO GRADE	76.42′ Lt A3 589+96.92	D-34	34	a
	b							1.15	1.15																			R&R SGD ON GRADE	76.42′ Lt A3 589+96.92			b
	c				1																							Adj DI TO GRADE	3.50′ Rt A3 589+73.86			c
	d							1.15	1.15																			R&R SGD ON GRADE	3.50′ Rt A3 589+73.86			d
	e				1																							Adj DI TO GRADE	75.71′ Rt A3 589+79.74			e
	f							1.15	1.15																			R&R SGD ON GRADE	75.71′ Rt A3 589+79.74			f
	g				1																							Adj DI TO GRADE	3.40′ Rt A3 594+00.00			g
	h							1.55	1.55																			R&R SGD IN GRADE SAG	3.40′ Rt A3 594+00.00			h
	i				1																							Adj DI TO GRADE	3.29′ Rt A3 594+49.32			i
	j							1.55	1.55																			R&R SGD IN GRADE SAG	3.29′ Rt A3 594+49.32			j
	k				1																							Adj DI TO GRADE	67.60′ Lt A3 595+48.72			k
	l							1.55	1.55																			R&R SGD IN GRADE SAG	67.60′ Lt A3 595+48.72			l
	m				1																							Adj DI TO GRADE	0.00′ Lt A3 595+22.81			m
	n							1.55	1.55																			R&R SGD IN GRADE SAG	0.00′ Lt A3 595+22.81			n
	o				1																							Adj DI TO GRADE	69.03′ Rt A3 594+90.08			o
	p							1.55	1.55																			R&R SGD IN GRADE SAG	69.03′ Rt A3 594+90.08			p
	q				1																							Adj DI TO GRADE	68.77′ Lt A3 599+05.15			q
	r							1.55	1.55																			R&R SGD IN GRADE SAG	68.77′ Lt A3 599+05.15			r
	s				1																							Adj DI TO GRADE	68.89′ Lt A3 599+50.37			s
	t							1.55	1.55																			R&R SGD IN GRADE SAG	68.89′ Lt A3 599+50.37			t
	u				1																							Adj DI TO GRADE	3.42′ Lt A3 599+50.32			u
	v							1.55	1.55																			R&R SGD IN GRADE SAG	3.42′ Lt A3 599+50.32			v
	w				1																							Adj DI TO GRADE	3.11′ Lt A3 599+85.75			w
	x							1.55	1.55																			R&R SGD IN GRADE SAG	3.11′ Lt A3 599+85.75			x
34	y				1																							Adj DI TO GRADE	3.00′ Lt A3 600+36.86	D-34	34	y
					14			18.55	18.55																			SHEET TOTAL				

CALCULATED-DESIGNED BY	CHECKED BY	REVISED BY	DATE REVISED
RAJA PERIKETI	CHRIS SEWELL	RP	07/31/09
CS			11/25/09

CONSULTANT FUNCTIONAL SUPERVISOR: HAN-BIN LIANG

STATE OF CALIFORNIA - DEPARTMENT OF TRANSPORTATION
Caltrans

DRAINAGE QUANTITIES **DQ-14**

LAST REVISION DATE PLOTTED => 04-FEB-2010
11-25-09 TIME PLOTTED => 14:11

BORDER LAST REVISED 4/11/2008

RELATIVE BORDER SCALE IS IN INCHES 0 1 2 3

USERNAME => trpierce
DGN FILE => 44470uid014.dgn

CU 04236

EA 4470U1

Dist	COUNTY	ROUTE	POST MILES TOTAL PROJECT	SHEET No.	TOTAL SHEETS
04	CC	680	0.0/R12.8	168	504

Han-Bin Liang 06/22/09
REGISTERED CIVIL ENGINEER DATE

2-1-10
PLANS APPROVAL DATE

REGISTERED PROFESSIONAL ENGINEER — HAN-BIN LIANG — No. C 48404 — Exp. 6/30/10 — CIVIL — STATE OF CALIFORNIA

THE STATE OF CALIFORNIA OR ITS OFFICERS OR AGENTS SHALL NOT BE RESPONSIBLE FOR THE ACCURACY OR COMPLETENESS OF ELECTRONIC COPIES OF THIS PLAN SHEET.

WRECO
1243 ALPINE ROAD
SUITE 108
WALNUT CREEK, CA 94596

CALTRANS
111 GRAND AVENUE
OAKLAND, CA 94612

DRAINAGE QUANTITIES

DRAINAGE SYSTEM No. ⬡	DRAINAGE UNIT ◯	REMOVE DI (EA)	REMOVE CULVERT (LF)	REMOVE OVERSIDE DRAIN	ADJUST INLET (EA)	ADJUST FRAME AND COVER TO GRADE (EA)	Misc IRON AND STEEL (LB)	REMOVE CONCRETE (CY)	MINOR CONCRETE: Misc CONSTRUCTION (CY)	MINOR CONCRETE: MINOR STRUCTURE (CY)	12" PLASTIC PIPE DOWNDRAIN (LF)	18" APC (LF)	10" FLUME DOWNDRAIN (LF)	10" FLUME ANCHOR ASSEMBLY (EA)	12" SLOTTED CORRUGATED STEEL PIPE (N) (LF)	CAP DI (EA)	GRATED LINE DRAIN (LF)	TAPERED INLET	ENTRANCE TAPER (TYPE 1) (EA)	RSP (FACING, METHOD B) (CY)	RSP FABRIC (SQYD)	HOT MIX ASPHALT (Misc AREA)	TYPE 24-12 FRAME AND GRATE (N) (EA)	PIPE JOINT CLASSIFICATION (N)	MAXIMUM COVER (N) (LF)	HEIGHT OF DI (N) (LF)	DESCRIPTION	STATION	DRAINAGE PLAN SHEET No.	DRAINAGE SYSTEM No. ⬡	DRAINAGE UNIT ◯
34	z							1.55	1.55																			R&R SGD IN GRADE SAG	3.00′ Lt A3 600+36.86	D-34	34	z
	aa				1																							Adj DI TO GRADE	70.61′ Rt A3 599+50.32			aa
	bb							1.15	1.15																			R&R SGD ON GRADE	70.61′ Rt A3 599+50.32			bb
	cc					1																						Adj MH TO GRADE	5.01′ Lt A3 601+80.36			cc
34	dd					1																						Adj MH TO GRADE	4.33′ Lt A3 602+07.08	D-34	34	dd
35	a				1																							Adj DI TO GRADE	2.48′ Lt A3 603+52.18	D-35	35	a
	b							1.15	1.15																			R&R SGD ON GRADE	2.48′ Lt A3 603+52.18			b
	c				1																							Adj DI TO GRADE	3.09′ Lt A3 607+23.22			c
	d							1.15	1.15																			R&R SGD ON GRADE	3.09′ Lt A3 607+23.22			d
	e				1																							Adj DI TO GRADE	81.08′ Rt A3 607+24.51			e
	f							1.15	1.15																			R&R SGD ON GRADE	81.08′ Rt A3 607+24.51			f
	g				1																							Adj DI TO GRADE	2.84′ Lt A3 608+77.61			g
	h							1.55	1.55																			R&R SGD IN GRADE SAG	2.84′ Lt A3 608+77.61			h
	i				1																							Adj DI TO GRADE	2.94′ Lt A3 609+33.10			i
	j							1.55	1.55																			R&R SGD IN GRADE SAG	2.94′ Lt A3 609+33.10			j
	k				1																							Adj DI TO GRADE	3.07′ Lt A3 609+84.38			k
	l							1.55	1.55																			R&R SGD IN GRADE SAG	3.07′ Lt A3 609+84.38			l
	m				1																							Adj DI TO GRADE	81.12′ Lt A3 611+69.02			m
	n							1.15	1.15																			R&R SGD ON GRADE	81.12′ Lt A3 611+69.02			n
	o				1																							Adj DI TO GRADE	2.81′ Lt A3 612+24.95			o
	p							1.15	1.15																			R&R SGD ON GRADE	2.81′ Lt A3 612+24.95			p
	q				1																							Adj DI TO GRADE	71.97′ Rt A3 612+23.44			q
	r							1.15	1.15																			R&R SGD ON GRADE	71.97′ Rt A3 612+23.44			r
	s				1																							Adj DI TO GRADE	80.95′ Lt A3 613+98.56			s
	t							1.15	1.15																			R&R SGD ON GRADE	80.95′ Lt A3 613+98.56			t
	u				1																							Adj DI TO GRADE	8.42′ Rt A3 615+52.42			u
	v							1.15	1.15																			R&R SGD ON GRADE	8.42′ Rt A3 615+52.42			v
	w				1																							Adj DI TO GRADE	81.04′ Lt A3 616+47.85			w
	x							1.15	1.15																			R&R SGD ON GRADE	81.04′ Lt A3 616+47.85			x
	y					1																						Adj MH TO GRADE	0.33′ Lt A3 616+48.16			y
	z				1																							Adj DI TO GRADE	70.74′ Rt A3 616+11.21			z
35	aa							1.15	1.15																			R&R SGD ON GRADE	70.74′ Rt A3 616+11.21	D-35	35	aa
					14	3		18.85	18.85																			SHEET TOTAL				

DRAINAGE QUANTITIES DQ-15

RAJA PERIKETI	REVISED BY	RP	CS	CALCULATED-DESIGNED BY
CHRIS SEWELL	DATE REVISED	07/31/09	11/25/09	CHECKED BY

CONSULTANT FUNCTIONAL SUPERVISOR: HAN-BIN LIANG

STATE OF CALIFORNIA - DEPARTMENT OF TRANSPORTATION
Caltrans

LAST REVISION DATE PLOTTED => 04-FEB-2010
TIME PLOTTED => 14:11
11-25-09

BORDER LAST REVISED 4/11/2008

RELATIVE BORDER SCALE IS IN INCHES 0 1 2 3

USERNAME => trpierce
DGN FILE => 44470uid015.dgn

CU 04236

EA 4470U1

Dist	COUNTY	ROUTE	POST MILES TOTAL PROJECT	SHEET No.	TOTAL SHEETS
04	CC	680	0.0/R12.8	169	504

Han-Bin Liang 06/22/09
REGISTERED CIVIL ENGINEER DATE

2-1-10
PLANS APPROVAL DATE

REGISTERED PROFESSIONAL ENGINEER — HAN-BIN LIANG — No. C 48404 — Exp. 6/30/10 — CIVIL — STATE OF CALIFORNIA

THE STATE OF CALIFORNIA OR ITS OFFICERS OR AGENTS SHALL NOT BE RESPONSIBLE FOR THE ACCURACY OR COMPLETENESS OF ELECTRONIC COPIES OF THIS PLAN SHEET.

WRECO
1243 ALPINE ROAD
SUITE 108
WALNUT CREEK, CA 94596

CALTRANS
111 GRAND AVENUE
OAKLAND, CA 94612

DRAINAGE QUANTITIES

DRAINAGE SYSTEM No.	DRAINAGE UNIT	REMOVE DI (EA)	REMOVE CULVERT (LF)	REMOVE OVERSIDE DRAIN	ADJUST INLET (EA)	ADJUST FRAME AND COVER TO GRADE (EA)	Misc IRON AND STEEL (LB)	REMOVE CONCRETE (CY)	MINOR CONCRETE: Misc CONSTRUCTION (CY)	MINOR CONCRETE: MINOR STRUCTURE (CY)	12" PLASTIC PIPE DOWNDRAIN (LF)	18" APC (LF)	10" FLUME DOWNDRAIN (LF)	10" FLUME ANCHOR ASSEMBLY (EA)	12" SLOTTED CORRUGATED STEEL PIPE (N) (LF)	CAP DI (EA)	GRATED LINE DRAIN (LF)	TAPERED INLET	ENTRANCE TAPER (TYPE 1) (EA)	RSP (FACING, METHOD B) (CY)	RSP FABRIC (SQYD)	HOT MIX ASPHALT (Misc AREA)	TYPE 24-12 FRAME AND GRATE (N) (EA)	PIPE JOINT CLASSIFICATION (N)	MAXIMUM COVER (N) (LF)	HEIGHT OF DI (N) (LF)	DESCRIPTION	STATION	DRAINAGE PLAN SHEET No.	DRAINAGE SYSTEM No.	DRAINAGE UNIT
35	bb				1																							Adj DI TO GRADE	3.97′ R† A3 619+03.16	D-35	35	bb
	cc							1.15	1.15																			R&R SGD ON GRADE	3.97′ R† A3 619+03.16			cc
	dd				1																							Adj DI TO GRADE	81.35′ L† A3 620+15.42			dd
	ee							1.15	1.15																			R&R SGD ON GRADE	81.35′ L† A3 620+15.42			ee
	ff					1																						Adj MH TO GRADE	1.97′ R† A3 620+00.94			ff
	gg				1																							Adj DI TO GRADE	70.96′ R† A3 619+97.51			gg
	hh							1.15	1.15																			R&R SGD ON GRADE	70.96′ R† A3 619+97.51			hh
	ii														60.0													12" SCSP	69.63′ R† A3 620+75.53 TO 69.09′ R† A3 621+37.98			ii
	jj											135.0													S	2.92		18" APC	70.96′ R† A3 619+97.51 TO 69.09′ R† A3 621+37.98			jj
	kk						326		1.15	1.44												1					3.5	G2 DI w/ SGD	69.09′ R† A3 621+37.98			kk
	ll				1																							Adj DI TO GRADE	80.72′ L† A3 622+99.52			ll
	mm							1.15	1.15																			R&R SGD ON GRADE	80.72′ L† A3 622+99.52			mm
	nn				1																							Adj DI TO GRADE	70.70′ R† A3 624+63.54			nn
	oo							1.15	1.15																			R&R SGD ON GRADE	70.70′ R† A3 624+63.54			oo
	pp				1																							Adj DI TO GRADE	81.38′ L† A3 625+99.56			pp
	qq							1.15	1.15																			R&R SGD ON GRADE	81.38′ L† A3 625+99.56			qq
	rr				1																							Adj DI TO GRADE	81.35′ L† A3 628+98.70			rr
	ss							1.15	1.15																			R&R SGD ON GRADE	81.35′ L† A3 628+98.70			ss
	tt					1																						Adj MH TO GRADE	1.50′ R† A3 628+81.10			tt
	uu				1																							Adj DI TO GRADE	75.55′ L† A3 632+00.27			uu
	vv							1.15	1.15																			R&R SGD ON GRADE	75.55′ L† A3 632+00.27			vv
35	ww					1																						Adj MH TO GRADE	1.56′ R† A3 632+10.26	D-35	35	ww
36	a				1																							Adj DI TO GRADE	68.40′ L† A3 635+12.58	D-36	36	a
	b							1.15	1.15																			R&R SGD ON GRADE	68.40′ L† A3 635+12.58			b
	c					1																						Adj MH TO GRADE	2.22′ R† A3 637+01.03			c
	d				1																							Adj DI TO GRADE	70.94′ R† A3 637+00.00			d
	e							1.15	1.15																			R&R SGD ON GRADE	70.94′ R† A3 637+00.00			e
	f				1																							Adj DI TO GRADE	69.18′ L† A3 637+82.91			f
	g							1.15	1.15																			R&R SGD ON GRADE	69.18′ L† A3 637+82.91			g
	h				1																							Adj DI TO GRADE	5.27′ L† A3 640+03.56			h
36	i							1.15	1.15																			R&R SGD ON GRADE	5.27′ L† A3 640+03.56	D-36	36	i
					12	4	326	13.80	14.95	1.44		135.0			60.0							1						SHEET TOTAL				

DRAINAGE QUANTITIES DQ-16

STATE OF CALIFORNIA - DEPARTMENT OF TRANSPORTATION	CALCULATED-DESIGNED BY	RAJA PERIKETI	REVISED BY	RP	CS
CONSULTANT FUNCTIONAL SUPERVISOR	CHECKED BY	CHRIS SEWELL	DATE REVISED	07/31/09	11/25/09
HAN-BIN LIANG					

LAST REVISION DATE PLOTTED => 04-FEB-2010
TIME PLOTTED => 14:11

BORDER LAST REVISED 4/11/2008

RELATIVE BORDER SCALE IS IN INCHES 0 1 2 3

USERNAME => trpierce
DGN FILE => 44470uid016.dgn

CU 04236

EA 4470U1

Dist	COUNTY	ROUTE	POST MILES TOTAL PROJECT	SHEET No.	TOTAL SHEETS
04	CC	680	0.0/R12.8	170	504

Han-Bin Liang 06/22/09
REGISTERED CIVIL ENGINEER DATE

2-1-10
PLANS APPROVAL DATE

REGISTERED PROFESSIONAL ENGINEER HAN-BIN LIANG No. C 48404 Exp. 6/30/10 CIVIL STATE OF CALIFORNIA

THE STATE OF CALIFORNIA OR ITS OFFICERS OR AGENTS SHALL NOT BE RESPONSIBLE FOR THE ACCURACY OR COMPLETENESS OF ELECTRONIC COPIES OF THIS PLAN SHEET.

WRECO
1243 ALPINE ROAD
SUITE 108
WALNUT CREEK, CA 94596

CALTRANS
111 GRAND AVENUE
OAKLAND, CA 94612

DRAINAGE QUANTITIES

DRAINAGE SYSTEM No.	DRAINAGE UNIT	REMOVE DI (EA)	REMOVE CULVERT (LF)	REMOVE OVERSIDE DRAIN	ADJUST INLET (EA)	ADJUST FRAME AND COVER TO GRADE	Misc IRON AND STEEL (LB)	REMOVE CONCRETE (CY)	MINOR CONCRETE: Misc CONSTRUCTION (CY)	MINOR CONCRETE: MINOR STRUCTURE (CY)	12" PLASTIC PIPE DOWNDRAIN (LF)	18" APC (LF)	10" FLUME DOWNDRAIN (LF)	10" FLUME ANCHOR ASSEMBLY (EA)	12" SLOTTED CORRUGATED STEEL PIPE (N) (LF)	CAP DI (EA)	GRATED LINE DRAIN (LF)	TAPERED INLET	ENTRANCE TAPER (TYPE 1) (EA)	RSP (FACING, METHOD B) (CY)	RSP FABRIC (SQYD)	HOT MIX ASPHALT (Misc AREA)	TYPE 24-12 FRAME AND GRATE (N) (EA)	PIPE JOINT CLASSIFICATION (N)	MAXIMUM COVER (N) (LF)	HEIGHT OF DI (N) (LF)	DESCRIPTION	STATION	DRAINAGE PLAN SHEET No.	DRAINAGE SYSTEM No.	DRAINAGE UNIT
36	j				1																							Adj DI TO GRADE	73.89′ R† A3 640+07.44	D-36	36	j
	k							1.55	1.55																			R&R SGD IN GRADE SAG	73.89′ R† A3 640+07.44			k
	l				1																							Adj DI TO GRADE	3.04′ R† A3 640+59.16			l
	m							1.55	1.55																			R&R SGD IN GRADE SAG	3.04′ R† A3 640+59.16			m
	n				1																							Adj DI TO GRADE	68.93′ L† A3 641+17.86			n
	o							1.15	1.15																			R&R SGD ON GRADE	68.93′ L† A3 641+17.86			o
	p				1																							Adj DI TO GRADE	3.95′ R† A4 641+36.70			p
	q							1.55	1.55																			R&R SGD IN GRADE SAG	3.95′ R† A4 641+36.70			q
	r					1																						Adj MH TO GRADE	7.77′ R† A4 641+35.51			r
	s				1																							Adj DI TO GRADE	4.86′ R† A4 641+86.63			s
	†							1.15	1.15																			R&R SGD ON GRADE	4.86′ R† A4 641+86.63			†
	u				1																							Adj DI TO GRADE	3.36′ R† A4 645+48.33			u
	v							1.15	1.15																			R&R SGD ON GRADE	3.36′ R† A4 645+48.33			v
	w				1																							Adj DI TO GRADE	73.83′ L† A4 647+21.49			w
	x							1.15	1.15																			R&R SGD ON GRADE	73.83′ L† A4 647+21.49			x
	y				1																							Adj DI TO GRADE	78.12′ L† A4 648+98.76			y
	z							1.15	1.15																			R&R SGD ON GRADE	78.12′ L† A4 648+98.76			z
	aa				1																							Adj DI TO GRADE	2.61′ R† A4 648+50.28			aa
	bb							1.15	1.15																			R&R SGD ON GRADE	2.61′ R† A4 648+50.28			bb
	cc				1																							Adj DI TO GRADE	73.69′ R† A4 648+49.45			cc
	dd							1.15	1.15																			R&R SGD ON GRADE	73.69′ R† A4 648+49.45			dd
	ee				1																							Adj DI TO GRADE	2.90′ R† A4 650+99.21			ee
	ff							1.15	1.15																			R&R SGD ON GRADE	2.90′ R† A4 650+99.21			ff
	gg				1																							Adj DI TO GRADE	3.17′ R† A4 651+50.85			gg
	hh							1.15	1.15																			R&R SGD ON GRADE	3.17′ R† A4 651+50.85			hh
	ii				1																							Adj DI TO GRADE	2.83′ R† A4 653+49.26			ii
	jj							1.15	1.15																			R&R SGD ON GRADE	2.83′ R† A4 653+49.26			jj
	kk				1																							Adj DI TO GRADE	69.68′ R† A4 653+49.23			kk
	ll							1.15	1.15																			R&R SGD ON GRADE	69.68′ R† A4 653+49.23			ll
	mm				1																							Adj DI TO GRADE	4.91′ R† A4 656+49.05			mm
	nn							1.15	1.15																			R&R SGD ON GRADE	4.91′ R† A4 656+49.05			nn
36	oo				1																							Adj DI TO GRADE	80.60′ L† A4 657+50.61	D-36	36	oo
					16	1		18.45	18.45																			SHEET TOTAL				

DRAINAGE QUANTITIES DQ-17

LAST REVISION DATE PLOTTED => 04-FEB-2010
TIME PLOTTED => 14:11

STATE OF CALIFORNIA - DEPARTMENT OF TRANSPORTATION	RAJA PERIKETI	07/31/09	CS
Caltrans	CHRIS SEWELL	DATE REVISED	11/25/09
CONSULTANT FUNCTIONAL SUPERVISOR: HAN-BIN LIANG	CALCULATED-DESIGNED BY	REVISED BY	
	CHECKED BY		

BORDER LAST REVISED 4/11/2008

RELATIVE BORDER SCALE IS IN INCHES 0 1 2 3

USERNAME => trpierce
DGN FILE => 4470uid017.dgn

CU 04236

EA 4470U1

Dist	COUNTY	ROUTE	POST MILES TOTAL PROJECT	SHEET No.	TOTAL SHEETS
04	CC	680	0.0/R12.8	171	504

Han-Bin Liang 06/22/09
REGISTERED CIVIL ENGINEER DATE

2-1-10
PLANS APPROVAL DATE

REGISTERED PROFESSIONAL ENGINEER HAN-BIN LIANG No. C 48404 Exp. 6/30/10 CIVIL STATE OF CALIFORNIA

THE STATE OF CALIFORNIA OR ITS OFFICERS OR AGENTS SHALL NOT BE RESPONSIBLE FOR THE ACCURACY OR COMPLETENESS OF ELECTRONIC COPIES OF THIS PLAN SHEET.

WRECO
1243 ALPINE ROAD
SUITE 108
WALNUT CREEK, CA 94596

CALTRANS
111 GRAND AVENUE
OAKLAND, CA 94612

DRAINAGE QUANTITIES

DRAINAGE SYSTEM No.	DRAINAGE UNIT	REMOVE DI (EA)	REMOVE CULVERT (LF)	REMOVE OVERSIDE DRAIN	ADJUST INLET (EA)	ADJUST FRAME AND COVER TO GRADE	Misc IRON AND STEEL (LB)	REMOVE CONCRETE (CY)	MINOR CONCRETE: Misc CONSTRUCTION (CY)	MINOR CONCRETE: MINOR STRUCTURE (CY)	12" PLASTIC PIPE DOWNDRAIN (LF)	18" APC (LF)	10" FLUME DOWNDRAIN (LF)	10" FLUME ANCHOR ASSEMBLY (EA)	12" SLOTTED CORRUGATED STEEL PIPE (N) (LF)	CAP DI (EA)	GRATED LINE DRAIN (LF)	TAPERED INLET	ENTRANCE TAPER (TYPE 1) (EA)	RSP (FACING, METHOD B) (CY)	RSP FABRIC (SQYD)	HOT MIX ASPHALT (Misc AREA)	TYPE 24-12 FRAME AND GRATE (N) (EA)	PIPE JOINT CLASSIFICATION (N)	MAXIMUM COVER (N) (LF)	HEIGHT OF DI (N) (LF)	DESCRIPTION	STATION	DRAINAGE PLAN SHEET No.	DRAINAGE SYSTEM No.	DRAINAGE UNIT
36	pp							1.15	1.15																			R&R SGD ON GRADE	80.60' Lt A4 657+50.61	D-36	36	pp
	qq				1																							Adj DI TO GRADE	3.85' Lt A4 657+49.91			qq
	rr							1.15	1.15																			R&R SGD ON GRADE	3.85' Lt A4 657+49.91			rr
	ss				1																							Adj DI TO GRADE	4.22' Lt A4 658+02.79			ss
	tt							1.55	1.55																			R&R SGD IN GRADE SAG	4.22' Lt A4 658+02.79			tt
	uu				1																							Adj DI TO GRADE	4.40' Lt A4 658+53.57			uu
	vv							1.15	1.15																			R&R SGD ON GRADE	4.40' Lt A4 658+53.57			vv
	ww				1																							Adj DI TO GRADE	4.28' Lt A4 659+49.83			ww
36	xx							1.15	1.15																			R&R SGD ON GRADE	4.28' Lt A4 659+49.83	D-36	36	xx
37	a				1																							Adj DI TO GRADE	3.34' Lt A4 661+00.58	D-37	37	a
	b							1.15	1.15																			R&R SGD ON GRADE	3.34' Lt A4 661+00.58			b
	c				1																							Adj DI TO GRADE	69.83' Rt A4 661+01.52			c
	d							1.15	1.15																			R&R SGD ON GRADE	69.83' Rt A4 661+01.52			d
	e				1																							Adj DI TO GRADE	2.75' Lt A4 662+99.68			e
	f							1.15	1.15																			R&R SGD ON GRADE	2.75' Lt A4 662+99.68			f
	g								1.15	1.69																	4.50	G2 DI w/ SGD	68.60' Rt A4 664+76.74			g
	h											77.0													S	3.00		18" APC	68.60' Rt A4 664+76.74 TO 67.81' Rt A4 665+60.41			h
37	i														50.0													12" SCSP	68.77' Rt A4 665+06.87 TO 67.81' Rt A4 665+60.41	D-37	37	i
					7			9.60	10.75	1.69		77.0			50.0													SHEET TOTAL				
		1	39.7	1	175	14	521	352.90	372.45	31.23	65.8	1909.9	63.0	6	393.1	4	69.5	1	1	1.67	7.00	12.32		16					GRAND TOTAL				

DRAINAGE QUANTITIES DQ-18

LAST REVISION DATE PLOTTED => 04-FEB-2010
TIME PLOTTED => 14:11
11-25-09

STATE OF CALIFORNIA - DEPARTMENT OF TRANSPORTATION	CONSULTANT FUNCTIONAL SUPERVISOR	CALCULATED-DESIGNED BY	CHECKED BY	REVISED BY	DATE REVISED
Caltrans	HAN-BIN LIANG	RAJA PERIKETI	CHRIS SEWELL	RP	07/31/09
				CS	11/25/09

BORDER LAST REVISED 4/11/2008

RELATIVE BORDER SCALE IS IN INCHES 0 1 2 3

USERNAME => trpierce
DGN FILE => 44470uid018.dgn

CU 04236

EA 4470U1

QUANTITIES FOR TEMPORARY DRAINAGE FOR MEDIAN INLETS WITH STANDARD GUTTER DEPRESSION

LOCATION OF INLET (SB)	TEMPORARY DRAINAGE FOR MEDIAN INLETS WITH SGD TYPE 1 (EA)	TEMPORARY DRAINAGE FOR MEDIAN INLETS WITH SGD TYPE 2 (EA)	STEEL PLATE (N) (EA)	TEMPORARY 12" SCSP (N) (LF)	HMA (N) (TON)	PAVEMENT REINFORCING FABRIC (N) (SQYD)
1.09 Lt A 48+77.83	1		1	12	2.25	5.8
1.18 Lt A 51+50.61	1		1	12	2.25	5.8
0.79 Lt A4 180+70.56		1	1	24	3.03	7.6
0.34 Lt A4 180+99.70	1		1	12	2.25	5.8
0.55 Lt A4 183+00.33	1		1	12	2.25	5.8
0.49 Lt A4 185+00.13	1		1	12	2.25	5.8
0.63 Lt A4 187+00.33	1		1	12	2.25	5.8
0.00 Lt A4 189+00.00	1		1	12	2.25	5.8
2.10 Lt A4 229+01.21	1		1	12	2.25	5.8
0.00 Lt A4 258+73.01	1		1	12	2.25	5.8
0.00 Lt A3 309+51.90	1		1	12	2.25	5.8
7.03 Lt A3 340+21.72	1		1	12	2.25	5.8
1.58 Lt A3 349+70.37	1		1	12	2.25	5.8
1.14 Lt A4 351+80.48	1		1	12	2.25	5.8
1.11 Lt A4 352+00.46		1	1	24	3.03	7.6
0.93 Lt A4 352+30.20	1		1	12	2.25	5.8
0.82 Lt A4 353+13.02	1		1	12	2.25	5.8
0.69 Lt A4 354+27.32	1		1	12	2.25	5.8
0.95 Lt A4 358+00.24	1		1	12	2.25	5.8
1.37 Lt A4 361+50.31	1		1	12	2.25	5.8
0.87 Lt A4 364+88.00	1		1	12	2.25	5.8
1.04 Lt A4 420+79.37	1		1	12	2.25	5.8
2.29 Lt A3 444+90.95	1		1	12	2.25	5.8
0.36 Lt A3 445+40.00	1		1	12	2.25	5.8
0.87 Lt A3 492+42.24	1		1	12	2.25	5.8
0.43 Lt A4 492+92.37		1	1	24	3.03	7.6
0.53 Lt A4 492+64.89	1		1	12	2.25	5.8
0.64 Lt A4 497+49.90	1		1	12	2.25	5.8

LOCATION OF INLET (SB)	TEMPORARY DRAINAGE FOR MEDIAN INLETS WITH SGD TYPE 1 (EA)	TEMPORARY DRAINAGE FOR MEDIAN INLETS WITH SGD TYPE 2 (EA)	STEEL PLATE (N) (EA)	TEMPORARY 12" SCSP (N) (LF)	HMA (N) (TON)	PAVEMENT REINFORCING FABRIC (N) (SQYD)
0.36 Lt A4 501+50.52	1		1	12	2.25	5.8
0.50 Lt A4 502+50.26		1	1	24	3.03	7.6
0.00 Lt A4 503+00.00	1		1	12	2.25	5.8
0.00 Lt A4 506+00.00	1		1	12	2.25	5.8
0.00 Lt A4 519+66.49	1		1	12	2.25	5.8
0.00 Lt A4 524+39.13		1	1	24	3.03	7.6
0.00 Lt A4 524+86.72		1	1	24	3.03	7.6
0.00 Lt A4 527+00.00	1		1	12	2.25	5.8
0.00 Lt A4 530+48.01	1		1	12	2.25	5.8
0.00 Lt A4 532+00.00	1		1	12	2.25	5.8
0.00 Lt A4 533+75.56	1		1	12	2.25	5.8
0.00 Lt A4 536+00.00	1		1	12	2.25	5.8
0.00 Lt A4 539+00.00	1		1	12	2.25	5.8
0.00 Lt A4 542+00.00	1		1	12	2.25	5.8
0.00 Lt A4 544+00.00		1	1	24	3.03	7.6
0.00 Lt A4 544+50.39		1	1	24	3.03	7.6
0.00 Lt A4 545+76.13	1		1	12	2.25	5.8
0.00 Lt A3 578+00.00	1		1	12	2.25	5.8
0.00 Lt A3 589+00.00	1		1	12	2.25	5.8
0.00 Lt A3 599+50.44		1	1	24	3.03	7.6
0.00 Lt A3 599+84.84		1	1	24	3.03	7.6
0.00 Lt A3 600+35.04	1		1	12	2.25	5.8
0.00 Lt A3 603+50.35	1		1	12	2.25	5.8
0.00 Lt A3 607+23.27	1		1	12	2.25	5.8
0.00 Lt A3 608+75.73		1	1	24	3.03	7.6
0.00 Lt A3 609+31.36		1	1	24	3.03	7.6
0.00 Lt A3 609+84.89		1	1	24	3.03	7.6
0.00 Rt A3 612+25.33	1		1	12	2.25	5.8

LOCATION OF INLET (SB)	TEMPORARY DRAINAGE FOR MEDIAN INLETS WITH SGD TYPE 1 (EA)	TEMPORARY DRAINAGE FOR MEDIAN INLETS WITH SGD TYPE 2 (EA)	STEEL PLATE (N) (EA)	TEMPORARY 12" SCSP (N) (LF)	HMA (N) (TON)	PAVEMENT REINFORCING FABRIC (N) (SQYD)
0.00 Lt A3 640+04.09	1	1	1	12	2.25	5.8
0.00 Lt A3 658+04.45		1	1	24	3.03	7.6
0.00 Lt A4 658+02.79	1	1	1	12	2.25	5.8
0.00 Lt A4 659+49.83	1	1	1	12	2.25	5.8
0.00 Lt A4 661+00.58	1	1	1	12	2.25	5.8
0.00 Lt A4 662+99.68	1	1	1	12	2.25	5.8
TOTAL SB	48	14	62	912	150.42	384.8

LOCATION OF INLET (NB)	TEMPORARY DRAINAGE FOR MEDIAN INLETS WITH SGD TYPE 1 (EA)	TEMPORARY DRAINAGE FOR MEDIAN INLETS WITH SGD TYPE 2 (EA)	STEEL PLATE (N) (EA)	TEMPORARY 12" SCSP (N) (LF)	HMA (N) (TON)	PAVEMENT REINFORCING FABRIC (N) (SQYD)
1.78 Rt A4 187+54.12	1		1	12	2.25	5.8
1.78 Rt A4 189+55.01	1		1	12	2.25	5.8
0.00 Rt A4 287+00.00	1		1	12	2.25	5.8
0.00 Rt A4 291+00.00	1		1	12	2.25	5.8
0.00 Rt A4 296+04.59	1		1	12	2.25	5.8
0.00 Rt A4 296+29.91		1	1	24	3.03	7.6
0.00 Rt A4 296+55.46	1		1	12	2.25	5.8
0.00 Rt A4 311+00.71	1		1	12	2.25	5.8
1.40 Rt A4 315+00.62	1		1	12	2.25	5.8
2.48 Rt A3 329+31.39	1		1	12	2.25	5.8
0.88 Rt A4 387+58.70	1		1	12	2.25	5.8
1.06 Rt A3 389+36.97	1		1	12	2.25	5.8
1.54 Rt A3 401+49.63	1		1	12	2.25	5.8
0.98 Rt A3 404+00.00	1		1	12	2.25	5.8
1.06 Rt A3 408+00.97	1		1	12	2.25	5.8
0.87 Rt A3 411+63.12	1		1	12	2.25	5.8
0.23 Rt A3 415+00.88	1		1	12	2.25	5.8
1.69 Rt A3 417+83.64	1		1	12	2.25	5.8
0.42 Rt A3 418+32.08		1	1	24	3.03	7.6
0.43 Rt A3 419+00.69	1		1	12	2.25	5.8
1.94 Rt A3 431+98.38	1		1	12	2.25	5.8
1.47 Rt A3 439+59.53	1		1	12	2.25	5.8
0.98 Rt A3 450+64.55	1		1	12	2.25	5.8
1.28 Rt A3 454+98.81	1		1	12	2.25	5.8
1.26 Rt A3 467+50.00	1		1	12	2.25	5.8
0.00 Rt A3 474+92.96	1		1	12	2.25	5.8
1.36 Rt A3 481+49.14	1		1	12	2.25	5.8
1.37 Rt A3 485+28.81	1		1	12	2.25	5.8

LOCATION OF INLET (NB)	TEMPORARY DRAINAGE FOR MEDIAN INLETS WITH SGD TYPE 1 (EA)	TEMPORARY DRAINAGE FOR MEDIAN INLETS WITH SGD TYPE 2 (EA)	STEEL PLATE (N) (EA)	TEMPORARY 12" SCSP (N) (LF)	HMA (N) (TON)	PAVEMENT REINFORCING FABRIC (N) (SQYD)
0.41 Rt A3 486+66.07	1		1	12	2.25	5.8
0.00 Rt A4 495+52.48	1		1	12	2.25	5.8
0.98 Rt A4 514+75.47	1		1	12	2.25	5.8
TOTAL NB	29	2	31	396	71.31	183.4
GRAND TOTAL	77	16	93	1308	221.73	568.2

(N) = NOT A SEPARATE PAY ITEM, FOR INFORMATION ONLY.

QUANTITIES FOR TEMPORARY DRAINAGE FOR MEDIAN INLETS WIHOUT STANDARD GUTTER DEPRESSION

LOCATION OF INLET (SB)	TEMPORARY WELD FRAME TO GRATE (EA)
0.14 Lt A 03.07.75	1
0.00 Lt A 08+00.53	1
0.00 Lt A 11+32.11	1
0.11 Lt A 14+00.72	1
0.00 Lt A 17+89.29	1
0.09 Lt A 21+84.47	1
1.24 Lt A 29+01.51	1
0.00 Lt A 33+79.27	1
0.00 Lt A 38+40.37	1
1.76 Lt A 39+97.64	1
1.32 Lt A4 70+50.45	1
1.25 Lt A4 75+52.04	1
0.00 Lt A4 79+87.31	1
0.00 Lt A4 94+00.00	1
1.21 Lt A4 101+00.00	1
1.72 Lt A4 143+00.45	1
0.00 Lt A4 148+00.97	1
0.90 Lt A4 175+96.68	1
0.00 Lt A4 202+73.58	1
0.00 Lt A4 207+37.51	1
1.85 Lt A4 222+01.44	1
2.05 Lt A4 224+02.87	1
1.81 Lt A4 226+03.53	1
2.66 Lt A4 228+05.26	1
0.00 Lt A4 233+16.62	1
0.00 Lt A4 251+00.00	1
0.00 Lt A4 265+46.51	1
0.00 Lt A4 266+10.51	1
0.00 Lt A4 303+86.75	1
6.93 Lt A4 340+22.46	1
0.00 Lt A3 621+01.81	1

LOCATION OF INLET (NB)	TEMPORARY WELD FRAME TO GRATE (EA)
1.17 Rt A 44+00.45	1
0.00 Rt A4 86+99.53	1
1.67 Rt A4 110+00.91	1
0.00 Rt A4 125+02.39	1
0.00 Rt A4 128+00.00	1
0.00 Rt A4 153+50.38	1
1.77 Rt A4 189+55.01	1
0.55 Rt A4 213+14.49	1
0.46 Rt A4 217+18.03	1
0.94 Rt A4 223+35.61	1
0.62 Rt A4 228+19.12	1
0.70 Rt A4 233+00.96	1
0.00 Rt A4 235+13.05	1
0.78 Rt A4 283+01.11	1
0.00 Rt A4 284+74.90	1
0.00 Rt A4 285+26.38	1
2.61 Rt A4 317+45.34	1
2.85 Rt A4 317+93.29	1
2.48 Rt A4 329+31.26	1
0.91 Rt A4 382+00.00	1
1.10 Rt A4 387+00.09	1
1.33 Rt A4 390+27.99	1
0.98 Rt A4 392+86.13	1
1.03 Rt A4 396+08.96	1
0.24 Rt A4 399+10.57	1
GRAND TOTAL	56

Dist	COUNTY	ROUTE	POST MILES TOTAL PROJECT	SHEET No.	TOTAL SHEETS
04	CC	680	0.0/R12.8	172	504

Han-Bin Liang 06/22/09
REGISTERED CIVIL ENGINEER DATE

2-1-10
PLANS APPROVAL DATE

REGISTERED PROFESSIONAL ENGINEER HAN-BIN LIANG No. C 48404 Exp. 6/30/10 CIVIL STATE OF CALIFORNIA

THE STATE OF CALIFORNIA OR ITS OFFICERS OR AGENTS SHALL NOT BE RESPONSIBLE FOR THE ACCURACY OR COMPLETENESS OF SCANNED COPIES OF THIS PLAN SHEET.

WRECO
1243 ALPINE ROAD
SUITE 108
WALNUT CREEK, CA 94596

CALTRANS
111 GRAND AVENUE
OAKLAND, CA 94612

CALCULATED-DESIGNED BY: RAJA PERIKETI
CHECKED BY: CHRIS SEWELL
REVISED BY: RP
DATE REVISED: 07/31/09
CS 12/28/09
CONSULTANT FUNCTIONAL SUPERVISOR: HAN-BIN LIANG

STATE OF CALIFORNIA - DEPARTMENT OF TRANSPORTATION

DRAINAGE QUANTITIES DQ-19

LAST REVISION DATE PLOTTED => 04-FEB-2010
TIME PLOTTED => 14:11
12-28-09

BORDER LAST REVISED 4/11/2008
RELATIVE BORDER SCALE IS IN INCHES 0 1 2 3
USERNAME => trpierce
DGN FILE => 4470uid019.dgn
CU 04609
EA 4470U1

Dist	COUNTY	ROUTE	POST MILES TOTAL PROJECT	SHEET No.	TOTAL SHEETS
04	CC	680	0.0/R12.8	173	504

Zora S. Mangat 8/7/09
REGISTERED CIVIL ENGINEER DATE

2-1-10
PLANS APPROVAL DATE

REGISTERED PROFESSIONAL ENGINEER Z. Mangat No. 44843 Exp. 3-31-10 CIVIL STATE OF CALIFORNIA

THE STATE OF CALIFORNIA OR ITS OFFICERS OR AGENTS SHALL NOT BE RESPONSIBLE FOR THE ACCURACY OR COMPLETENESS OF SCANNED COPIES OF THIS PLAN SHEET.

FOR ACCURATE RIGHT OF WAY DATA, CONTACT RIGHT OF WAY ENGINEERING AT THE DISTRICT OFFICE.

LEGEND

UTILITIES	EXISTING UTILITIES	OWNERSHIP
WATER	—w— —w—	EBMUD
GAS	—g— —g—	PG&E
SEWER	—s— —s—	CCCSD
ELECTRIC	—e— —(oh)—	PG&E
TELEPHONE	—t— —t—	AT&T
POTHOLE ELEVATION		

ABBREVIATIONS

AT&T	AT&T
CCCSD	CENTRAL CONTRA COSTA SANITARY DISTRICT
EBMUD	EAST BAY MUNICIPAL UTILITY DISTRICT
PG&E	PACIFIC GAS & ELECTRICAL
SFPP	SFPP, LP/KINDER MORGAN ENERGY PARTNERS

NOTES

1. LOCATION OF UTILITY FACILITIES SHOWN ON THESE PLANS ARE APPROXIMATE AND SHALL BE VERIFIED BY THE CONTRACTOR PRIOR TO CONSTRUCTION.
2. ALL UTILITIES SHOWN ARE EXISTING.

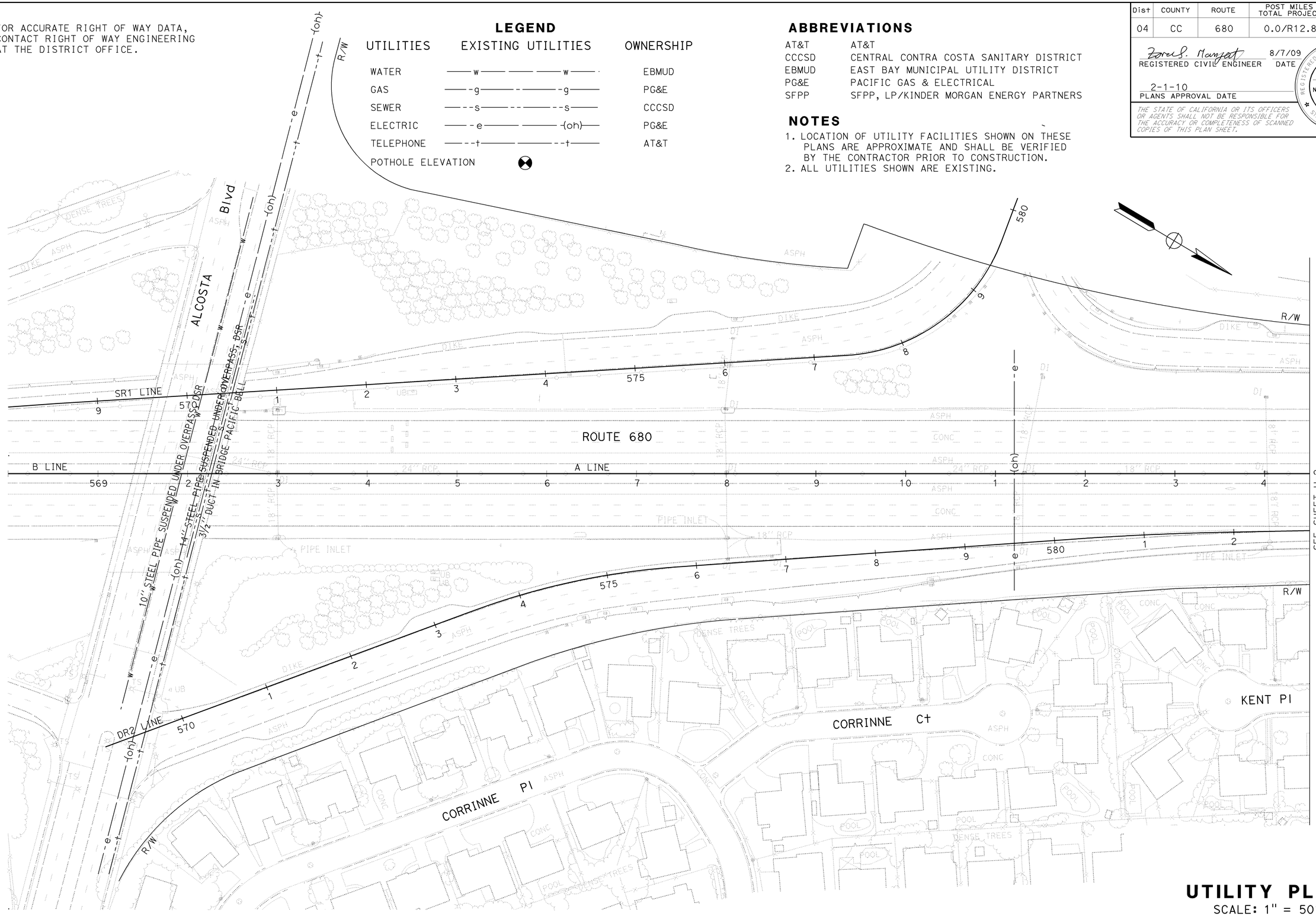

UTILITY PLAN

SCALE: 1" = 50'

THERE IS NO UTILITY WORK PERFORMED ON THIS SHEET (FOR INFO ONLY)

THIS PLAN ACCURATE FOR UTILITY INFOMATION ONLY

U-1

STATE OF CALIFORNIA - DEPARTMENT OF TRANSPORTATION
Caltrans
DESIGN

FUNCTIONAL SUPERVISOR: ARVIND K. GUPTA
CALCULATED-DESIGNED BY: RANJEET SINGH
CHECKED BY: ZORA S. MANGAT
REVISED BY: PL
DATE REVISED: 7/20/09

LAST REVISION 11-09-09
DATE PLOTTED => 04-FEB-2010
TIME PLOTTED => 14:11

FOR ACCURATE RIGHT OF WAY DATA,
CONTACT RIGHT OF WAY ENGINEERING
AT THE DISTRICT OFFICE.

Dist	COUNTY	ROUTE	POST MILES TOTAL PROJECT	SHEET No.	TOTAL SHEETS
04	CC	680	0.0/R12.8	174	504

Zora S. Mangat 8/7/09
REGISTERED CIVIL ENGINEER DATE

2-1-10
PLANS APPROVAL DATE

REGISTERED PROFESSIONAL ENGINEER
Z. Mangat
No. 44843
Exp 3-31-10
CIVIL
STATE OF CALIFORNIA

THE STATE OF CALIFORNIA OR ITS OFFICERS OR AGENTS SHALL NOT BE RESPONSIBLE FOR THE ACCURACY OR COMPLETENESS OF SCANNED COPIES OF THIS PLAN SHEET.

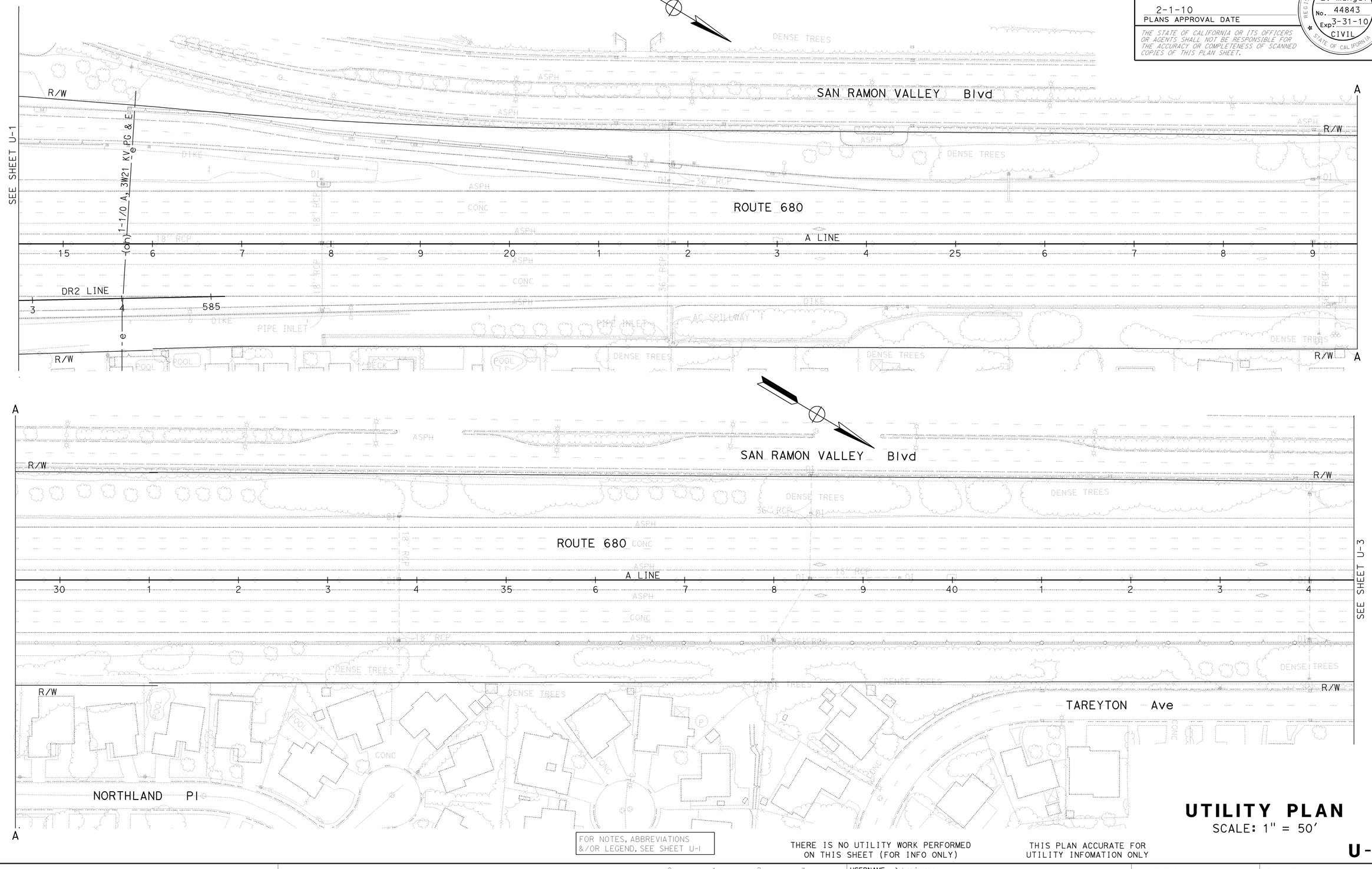

FOR NOTES, ABBREVIATIONS &/OR LEGEND, SEE SHEET U-1

THERE IS NO UTILITY WORK PERFORMED ON THIS SHEET (FOR INFO ONLY)

THIS PLAN ACCURATE FOR UTILITY INFOMATION ONLY

UTILITY PLAN
SCALE: 1" = 50'

U-2

CALCULATED-DESIGNED BY	CHECKED BY	REVISED BY	DATE REVISED
RANJEET SINGH	ZORA S. MANGAT	PL	7/20/09

FUNCTIONAL SUPERVISOR: ARVIND K. GUPTA

STATE OF CALIFORNIA - DEPARTMENT OF TRANSPORTATION
DESIGN

LAST REVISION DATE PLOTTED => 04-FEB-2010
TIME PLOTTED => 14:12
05-19-09

BORDER LAST REVISED 4/11/2008

RELATIVE BORDER SCALE IS IN INCHES 0 1 2 3

USERNAME => trpierce
DGN FILE => 44470uka002.dgn

CU 04236

EA 4470U1

FOR ACCURATE RIGHT OF WAY DATA,
CONTACT RIGHT OF WAY ENGINEERING
AT THE DISTRICT OFFICE.

Dist	COUNTY	ROUTE	POST MILES TOTAL PROJECT	SHEET No.	TOTAL SHEETS
04	CC	680	0.0/R12.8	175	504

Zora S. Mangat 8/7/09
REGISTERED CIVIL ENGINEER DATE

2-1-10
PLANS APPROVAL DATE

REGISTERED PROFESSIONAL ENGINEER
Z. Mangat
No. 44843
Exp 3-31-10
CIVIL
STATE OF CALIFORNIA

THE STATE OF CALIFORNIA OR ITS OFFICERS OR AGENTS SHALL NOT BE RESPONSIBLE FOR THE ACCURACY OR COMPLETENESS OF SCANNED COPIES OF THIS PLAN SHEET.

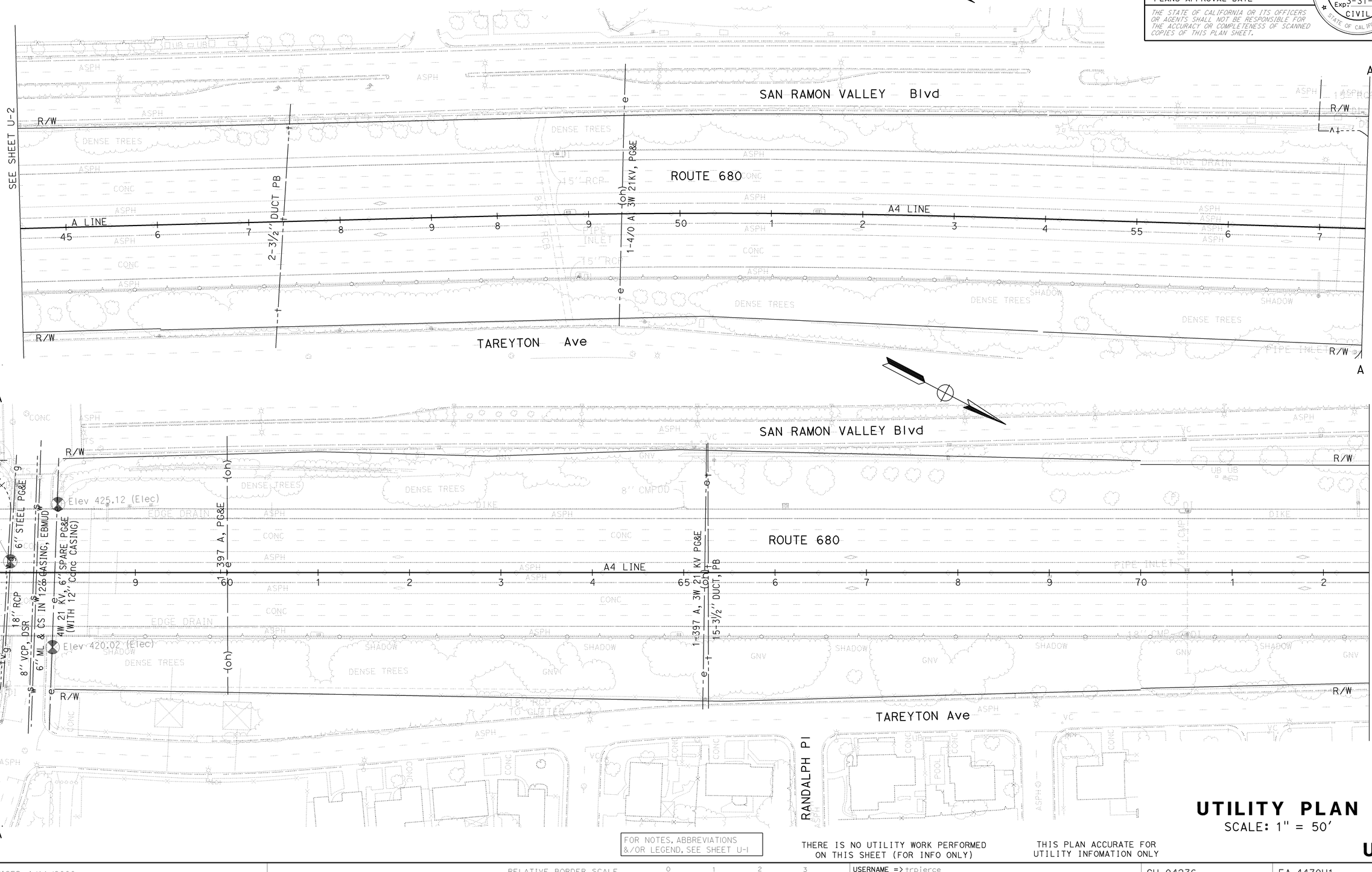

FOR NOTES, ABBREVIATIONS &/OR LEGEND, SEE SHEET U-1

THERE IS NO UTILITY WORK PERFORMED ON THIS SHEET (FOR INFO ONLY)

THIS PLAN ACCURATE FOR UTILITY INFOMATION ONLY

UTILITY PLAN

SCALE: 1" = 50'

U-3

REVISED BY	DATE REVISED
PL	7/20/09

CALCULATED-DESIGNED BY	CHECKED BY
RANJEET SINGH	ZORA S. MANGAT

FUNCTIONAL SUPERVISOR: ARVIND K. GUPTA

STATE OF CALIFORNIA - DEPARTMENT OF TRANSPORTATION
DESIGN

LAST REVISION | DATE PLOTTED => 04-FEB-2010
11-09-09 | TIME PLOTTED => 14:12

BORDER LAST REVISED 4/11/2008

RELATIVE BORDER SCALE IS IN INCHES 0 1 2 3

USERNAME => trpierce
DGN FILE => 44470uka003.dgn

CU 04236

EA 4470U1

FOR ACCURATE RIGHT OF WAY DATA,
CONTACT RIGHT OF WAY ENGINEERING
AT THE DISTRICT OFFICE.

Dist	COUNTY	ROUTE	POST MILES TOTAL PROJECT	SHEET No.	TOTAL SHEETS
04	CC	680	0.0/R12.8	176	504

Zora S. Mangat 8/7/09
REGISTERED CIVIL ENGINEER DATE

2-1-10
PLANS APPROVAL DATE

REGISTERED PROFESSIONAL ENGINEER
Z. Mangat
No. 44843
Exp 3-31-10
CIVIL
STATE OF CALIFORNIA

THE STATE OF CALIFORNIA OR ITS OFFICERS OR AGENTS SHALL NOT BE RESPONSIBLE FOR THE ACCURACY OR COMPLETENESS OF SCANNED COPIES OF THIS PLAN SHEET.

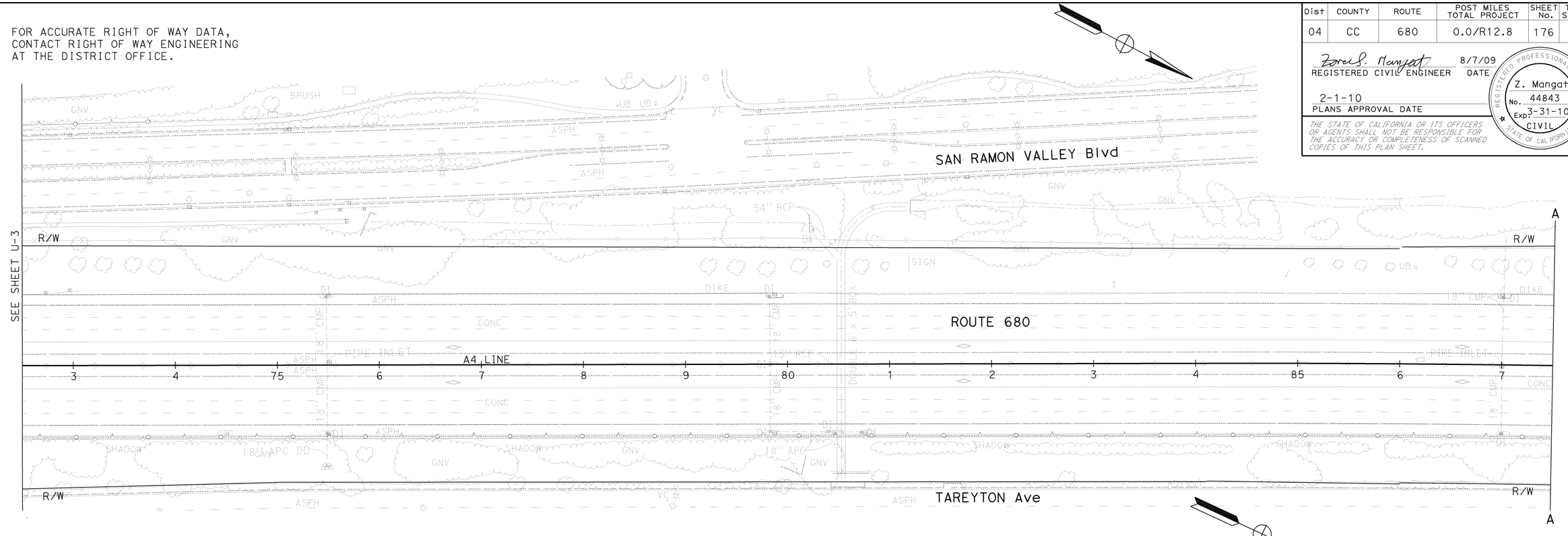

UTILITY PLAN
SCALE: 1" = 50'

U-4

FOR NOTES, ABBREVIATIONS &/OR LEGEND, SEE SHEET U-1

THERE IS NO UTILITY WORK PERFORMED ON THIS SHEET (FOR INFO ONLY)

THIS PLAN ACCURATE FOR UTILITY INFOMATION ONLY

LAST REVISION DATE PLOTTED => 04-FEB-2010
TIME PLOTTED => 14:12
11-09-09

STATE OF CALIFORNIA - DEPARTMENT OF TRANSPORTATION
DESIGN
FUNCTIONAL SUPERVISOR: ARVIND K. GUPTA
CALCULATED-DESIGNED BY: RANJEET SINGH
CHECKED BY: ZORA S. MANGAT
REVISED BY: PL
DATE REVISED: 7/20/09

BORDER LAST REVISED 4/11/2008

RELATIVE BORDER SCALE IS IN INCHES 0 1 2 3

USERNAME => trpierce
DGN FILE => 44470uka004.dgn

CU 04236

EA 4470U1

FOR ACCURATE RIGHT OF WAY DATA,
CONTACT RIGHT OF WAY ENGINEERING
AT THE DISTRICT OFFICE.

Dist	COUNTY	ROUTE	POST MILES TOTAL PROJECT	SHEET No.	TOTAL SHEETS
04	CC	680	0.0/R12.8	177	504

Zora S. Mangat 8/7/09
REGISTERED CIVIL ENGINEER DATE

2-1-10
PLANS APPROVAL DATE

REGISTERED PROFESSIONAL ENGINEER
Z. Mangat
No. 44843
Exp 3-31-10
CIVIL
STATE OF CALIFORNIA

THE STATE OF CALIFORNIA OR ITS OFFICERS OR AGENTS SHALL NOT BE RESPONSIBLE FOR THE ACCURACY OR COMPLETENESS OF SCANNED COPIES OF THIS PLAN SHEET.

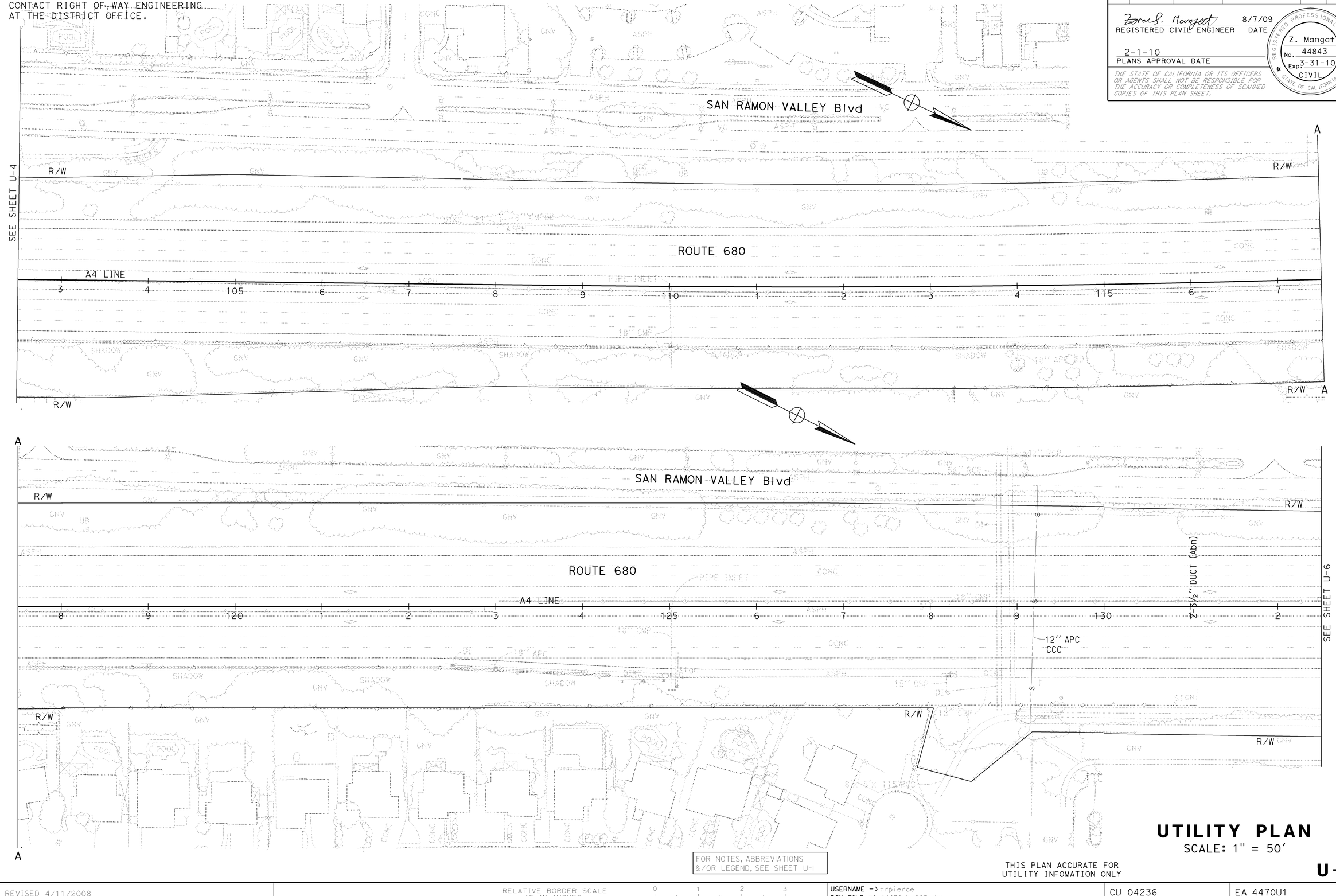

FOR NOTES, ABBREVIATIONS &/OR LEGEND, SEE SHEET U-1

THIS PLAN ACCURATE FOR UTILITY INFOMATION ONLY

UTILITY PLAN
SCALE: 1" = 50'

U-5

STATE OF CALIFORNIA - DEPARTMENT OF TRANSPORTATION
DESIGN
FUNCTIONAL SUPERVISOR: ARVIND K. GUPTA
CALCULATED-DESIGNED BY: RANJEET SINGH
CHECKED BY: ZORA S. MANGAT
REVISED BY: PL
DATE REVISED: 7/20/09
LAST REVISION DATE PLOTTED => 04-FEB-2010
TIME PLOTTED => 14:12
05-19-05

BORDER LAST REVISED 4/11/2008
RELATIVE BORDER SCALE IS IN INCHES 0 1 2 3
USERNAME => trpierce
DGN FILE => 44470uka005.dgn
CU 04236
EA 4470U1

FOR ACCURATE RIGHT OF WAY DATA,
CONTACT RIGHT OF WAY ENGINEERING
AT THE DISTRICT OFFICE.

Dist	COUNTY	ROUTE	POST MILES TOTAL PROJECT	SHEET No.	TOTAL SHEETS
04	CC	680	0.0/R12.8	178	504

Zora S. Mangat 8/7/09
REGISTERED CIVIL ENGINEER DATE

2-1-10
PLANS APPROVAL DATE

REGISTERED PROFESSIONAL ENGINEER
Z. Mangat
No. 44843
Exp 3-31-10
CIVIL
STATE OF CALIFORNIA

THE STATE OF CALIFORNIA OR ITS OFFICERS OR AGENTS SHALL NOT BE RESPONSIBLE FOR THE ACCURACY OR COMPLETENESS OF SCANNED COPIES OF THIS PLAN SHEET.

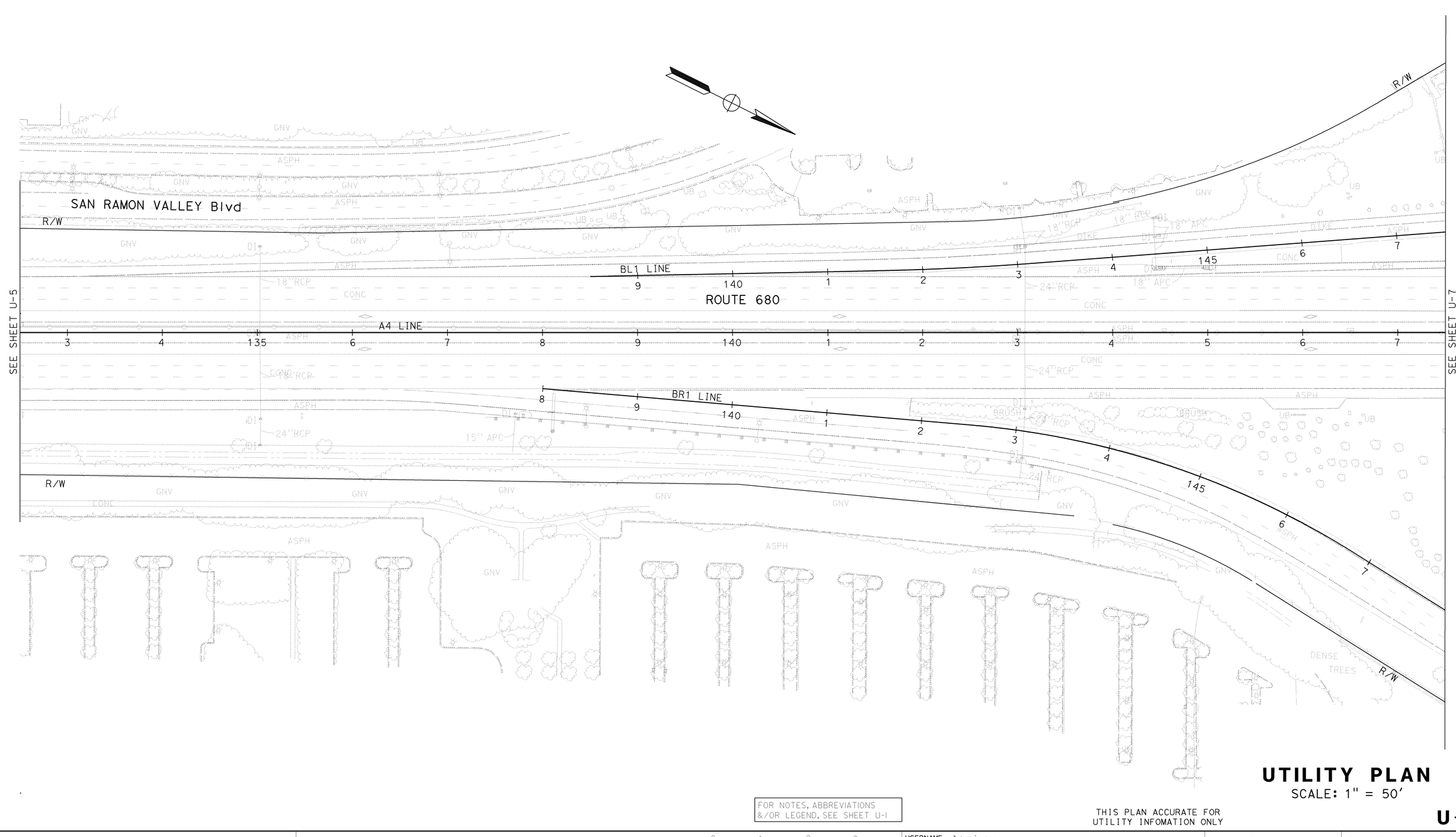

UTILITY PLAN

SCALE: 1" = 50'

U-6

FOR NOTES, ABBREVIATIONS &/OR LEGEND, SEE SHEET U-1

THIS PLAN ACCURATE FOR UTILITY INFOMATION ONLY

CALCULATED-DESIGNED BY: RANJEET SINGH
CHECKED BY: ZORA S. MANGAT
REVISED BY: PL
DATE REVISED: 7/20/09
FUNCTIONAL SUPERVISOR: ARVIND K. GUPTA
STATE OF CALIFORNIA - DEPARTMENT OF TRANSPORTATION
DESIGN
Caltrans

LAST REVISION DATE PLOTTED => 04-FEB-2010
TIME PLOTTED => 14:12
05-19-09

BORDER LAST REVISED 4/11/2008
RELATIVE BORDER SCALE IS IN INCHES 0 1 2 3
USERNAME => trpierce
DGN FILE => 44470uka006.dgn
CU 04236
EA 4470U1

FOR ACCURATE RIGHT OF WAY DATA,
CONTACT RIGHT OF WAY ENGINEERING
AT THE DISTRICT OFFICE.

Dist	COUNTY	ROUTE	POST MILES TOTAL PROJECT	SHEET No.	TOTAL SHEETS
04	CC	680	0.0/R12.8	179	504

Zora S. Mangat 8/7/09
REGISTERED CIVIL ENGINEER DATE

2-1-10
PLANS APPROVAL DATE

REGISTERED PROFESSIONAL ENGINEER
Z. Mangat
No. 44843
Exp 3-31-10
CIVIL
STATE OF CALIFORNIA

THE STATE OF CALIFORNIA OR ITS OFFICERS OR AGENTS SHALL NOT BE RESPONSIBLE FOR THE ACCURACY OR COMPLETENESS OF SCANNED COPIES OF THIS PLAN SHEET.

SEE SHEET U-6

SEE SHEET U-8

FOR NOTES, ABBREVIATIONS &/OR LEGEND, SEE SHEET U-1

THIS PLAN ACCURATE FOR UTILITY INFOMATION ONLY

UTILITY PLAN
SCALE: 1" = 50'

U-7

STATE OF CALIFORNIA - DEPARTMENT OF TRANSPORTATION
DESIGN
FUNCTIONAL SUPERVISOR: ARVIND K. GUPTA
CALCULATED-DESIGNED BY: RANJEET SINGH
CHECKED BY: ZORA S. MANGAT
REVISED BY: PL
DATE REVISED: 7/20/09

LAST REVISION DATE PLOTTED => 04-FEB-2010
TIME PLOTTED => 14:12
07-30-09

BORDER LAST REVISED 4/11/2008
RELATIVE BORDER SCALE IS IN INCHES 0 1 2 3
USERNAME => trpierce
DGN FILE => 4447Uuka007.dgn
CU 04236
EA 4470U1

FOR ACCURATE RIGHT OF WAY DATA,
CONTACT RIGHT OF WAY ENGINEERING
AT THE DISTRICT OFFICE.

Dist	COUNTY	ROUTE	POST MILES TOTAL PROJECT	SHEET No.	TOTAL SHEETS
04	CC	680	0.0/R12.8	180	504

Zora S. Mangat 8/7/09
REGISTERED CIVIL ENGINEER DATE

2-1-10
PLANS APPROVAL DATE

REGISTERED PROFESSIONAL ENGINEER
Z. Mangat
No. 44843
Exp. 3-31-10
CIVIL
STATE OF CALIFORNIA

THE STATE OF CALIFORNIA OR ITS OFFICERS OR AGENTS SHALL NOT BE RESPONSIBLE FOR THE ACCURACY OR COMPLETENESS OF SCANNED COPIES OF THIS PLAN SHEET.

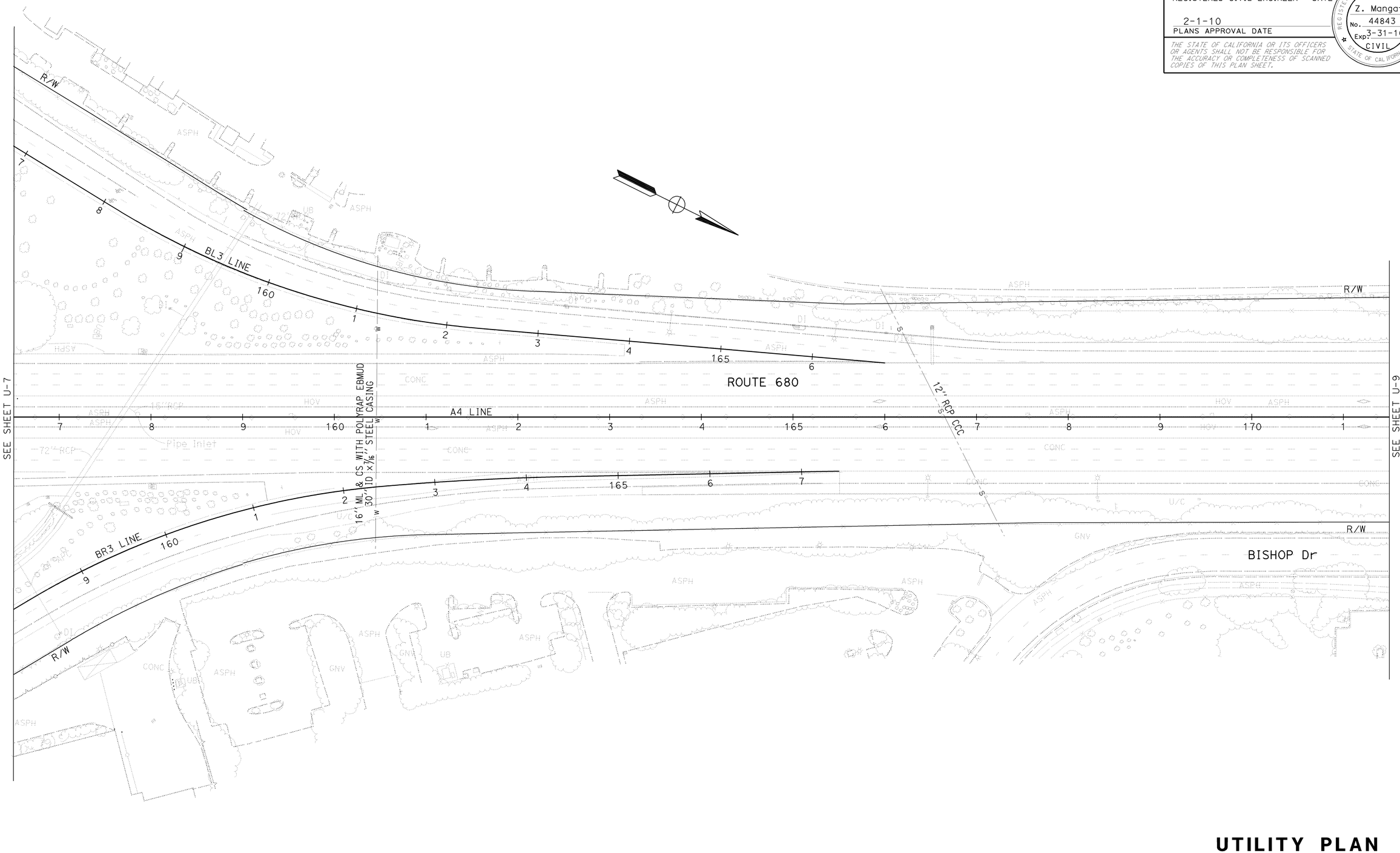

FOR NOTES, ABBREVIATIONS &/OR LEGEND, SEE SHEET U-1

THIS PLAN ACCURATE FOR UTILITY INFOMATION ONLY

UTILITY PLAN
SCALE: 1" = 50'

U-8

STATE OF CALIFORNIA - DEPARTMENT OF TRANSPORTATION
Caltrans
DESIGN
FUNCTIONAL SUPERVISOR: ARVIND K. GUPTA
CALCULATED-DESIGNED BY: RANJEET SINGH
CHECKED BY: ZORA S. MANGAT
REVISED BY: PL
DATE REVISED: 7/20/09

LAST REVISION
DATE PLOTTED => 04-FEB-2010
TIME PLOTTED => 14:12
05-19-09

BORDER LAST REVISED 4/11/2008
RELATIVE BORDER SCALE IS IN INCHES 0 1 2 3
USERNAME => trpierce
DGN FILE => 44470uka008.dgn
CU 04236
EA 4470U1

FOR ACCURATE RIGHT OF WAY DATA,
CONTACT RIGHT OF WAY ENGINEERING
AT THE DISTRICT OFFICE.

Dist	COUNTY	ROUTE	POST MILES TOTAL PROJECT	SHEET No.	TOTAL SHEETS
04	CC	680	0.0/R12.8	181	504

Zora S. Mangat 8/7/09
REGISTERED CIVIL ENGINEER DATE

2-1-10
PLANS APPROVAL DATE

REGISTERED PROFESSIONAL ENGINEER
Z. Mangat
No. 44843
Exp. 3-31-10
CIVIL
STATE OF CALIFORNIA

THE STATE OF CALIFORNIA OR ITS OFFICERS OR AGENTS SHALL NOT BE RESPONSIBLE FOR THE ACCURACY OR COMPLETENESS OF SCANNED COPIES OF THIS PLAN SHEET.

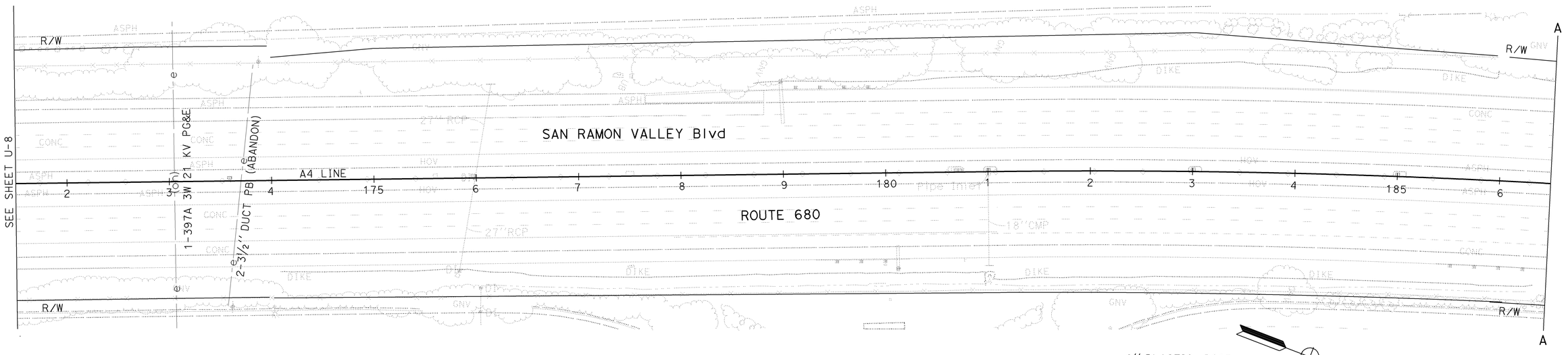

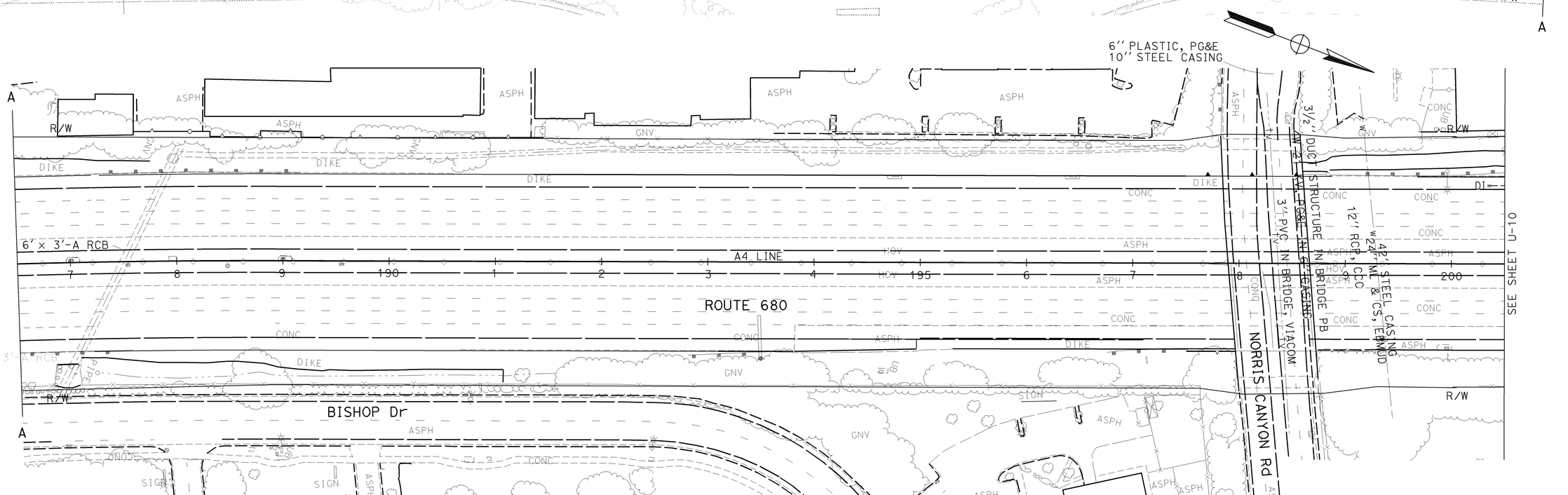

FOR NOTES, ABBREVIATIONS &/OR LEGEND, SEE SHEET U-1

THIS PLAN ACCURATE FOR UTILITY INFOMATION ONLY

UTILITY PLAN
SCALE: 1" = 50'

U-9

STATE OF CALIFORNIA - DEPARTMENT OF TRANSPORTATION
DESIGN
FUNCTIONAL SUPERVISOR: ARVIND K. GUPTA
CALCULATED-DESIGNED BY: RANJEET SINGH
CHECKED BY: ZORA S. MANGAT
REVISED BY: PL
DATE REVISED: 7/20/09

LAST REVISION DATE PLOTTED => 04-FEB-2010
TIME PLOTTED => 14:12
05-19-09

BORDER LAST REVISED 4/11/2008
RELATIVE BORDER SCALE IS IN INCHES 0 1 2 3
USERNAME => trpierce
DGN FILE => 4470uka009.dgn
CU 04236
EA 4470U1

FOR ACCURATE RIGHT OF WAY DATA,
CONTACT RIGHT OF WAY ENGINEERING
AT THE DISTRICT OFFICE.

Dist	COUNTY	ROUTE	POST MILES TOTAL PROJECT	SHEET No.	TOTAL SHEETS
04	CC	680	0.0/R12.8	182	504

Zora S. Mangat 8/7/09
REGISTERED CIVIL ENGINEER DATE

2-1-10
PLANS APPROVAL DATE

REGISTERED PROFESSIONAL ENGINEER
Z. Mangat
No. 44843
Exp 3-31-10
CIVIL
STATE OF CALIFORNIA

THE STATE OF CALIFORNIA OR ITS OFFICERS OR AGENTS SHALL NOT BE RESPONSIBLE FOR THE ACCURACY OR COMPLETENESS OF SCANNED COPIES OF THIS PLAN SHEET.

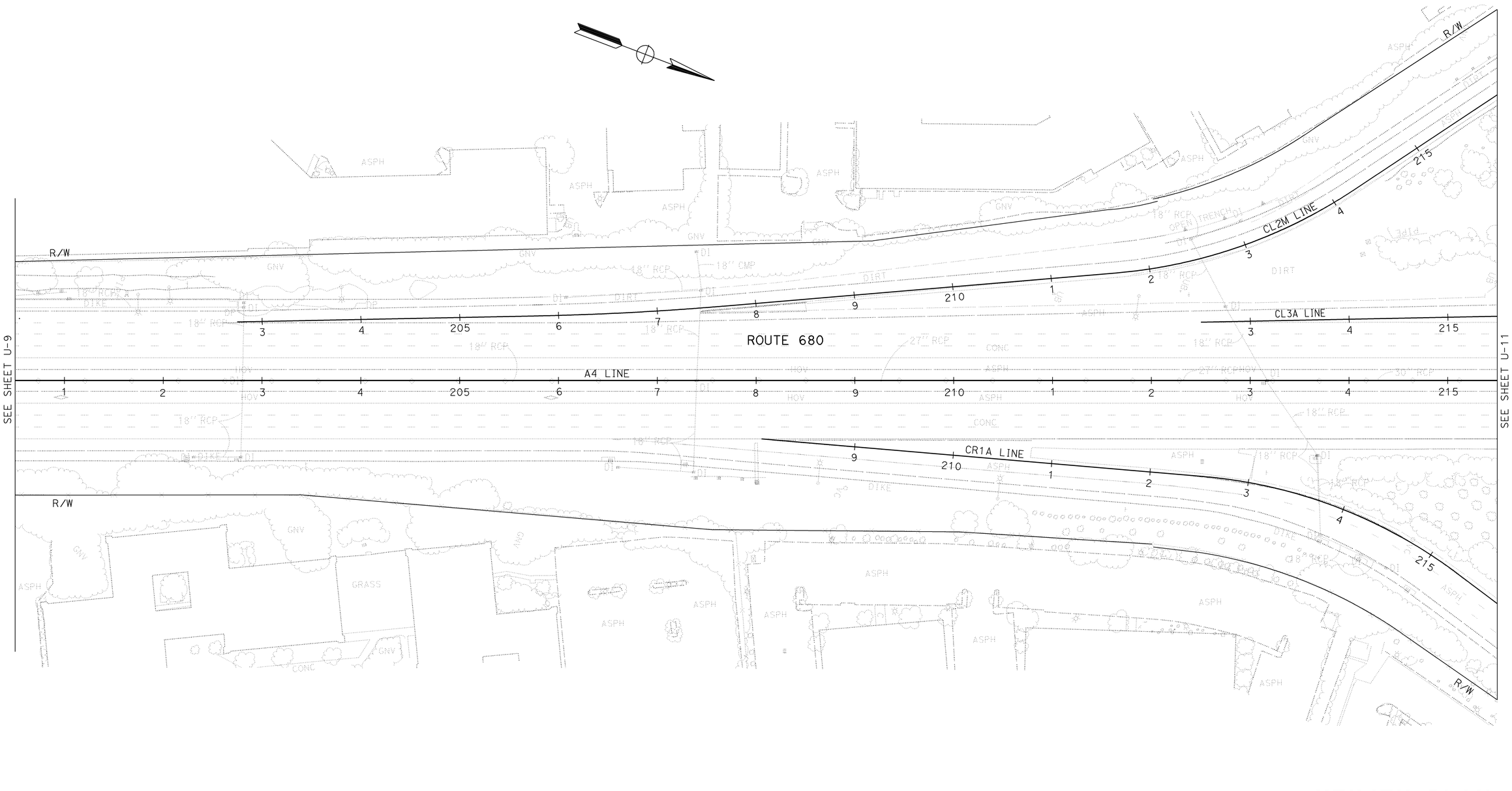

FOR NOTES, ABBREVIATIONS &/OR LEGEND, SEE SHEET U-1

UTILITY PLAN

SCALE: 1" = 50'

THIS PLAN ACCURATE FOR UTILITY INFORMATION ONLY

U-10

STATE OF CALIFORNIA - DEPARTMENT OF TRANSPORTATION
Caltrans
DESIGN

FUNCTIONAL SUPERVISOR: ARVIND K. GUPTA

CALCULATED-DESIGNED BY: RANJEET SINGH
CHECKED BY: ZORA S. MANGAT

REVISED BY: PL
DATE REVISED: 7/20/09

LAST REVISION DATE PLOTTED => 04-FEB-2010
TIME PLOTTED => 14:12

BORDER LAST REVISED 4/11/2008

RELATIVE BORDER SCALE IS IN INCHES 0 1 2 3

USERNAME => trpierce
DGN FILE => 44470uka010.dgn

CU 04236

EA 4470U1

FOR ACCURATE RIGHT OF WAY DATA,
CONTACT RIGHT OF WAY ENGINEERING
AT THE DISTRICT OFFICE.

Dist	COUNTY	ROUTE	POST MILES TOTAL PROJECT	SHEET No.	TOTAL SHEETS
04	CC	680	0.0/R12.8	183	504

Zora S. Mangat 8/7/09
REGISTERED CIVIL ENGINEER DATE

2-1-10
PLANS APPROVAL DATE

REGISTERED PROFESSIONAL ENGINEER
Z. Mangat
No. 44843
Exp 3-31-10
CIVIL
STATE OF CALIFORNIA

THE STATE OF CALIFORNIA OR ITS OFFICERS OR AGENTS SHALL NOT BE RESPONSIBLE FOR THE ACCURACY OR COMPLETENESS OF SCANNED COPIES OF THIS PLAN SHEET.

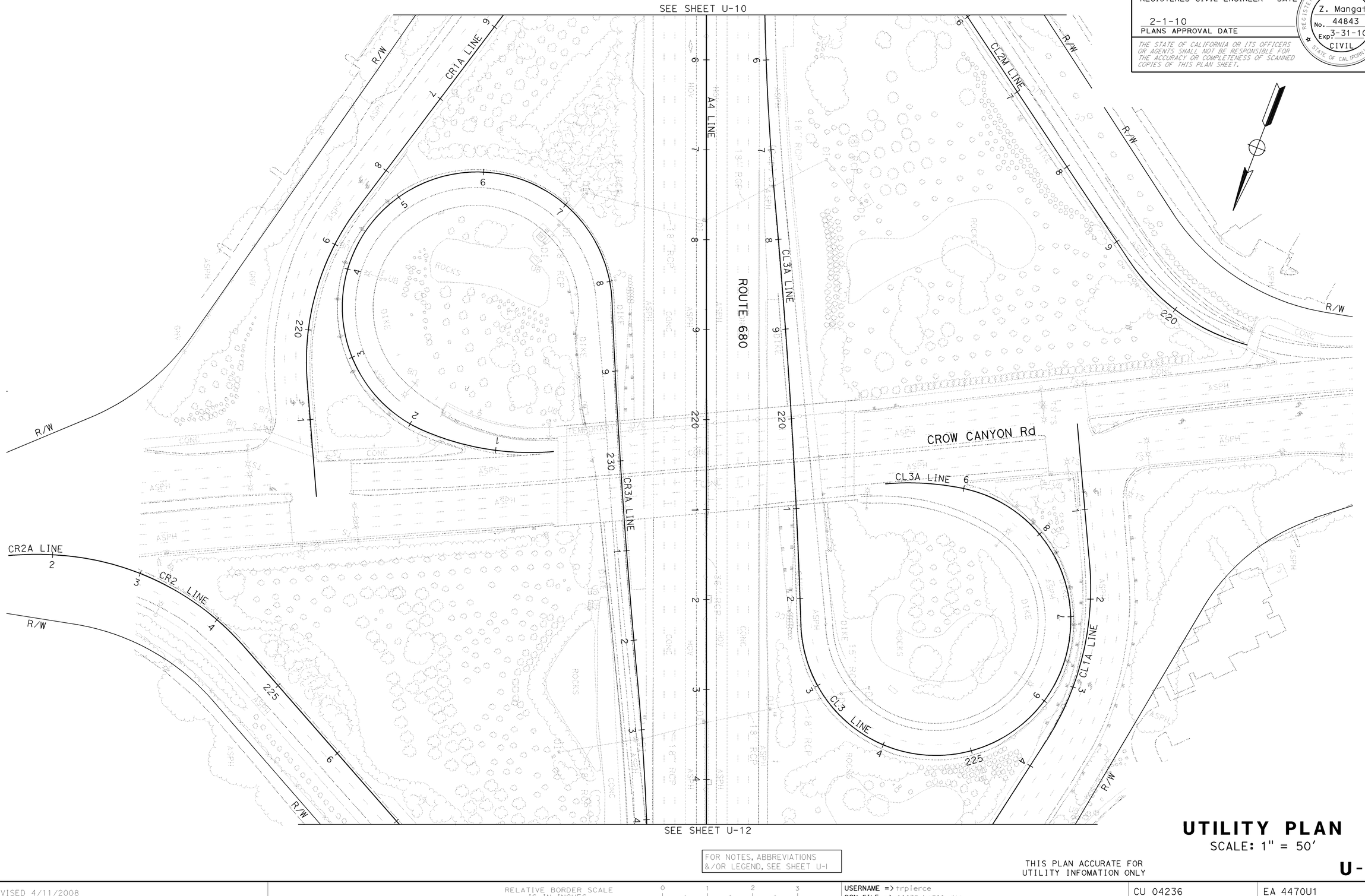

FOR NOTES, ABBREVIATIONS &/OR LEGEND, SEE SHEET U-1

THIS PLAN ACCURATE FOR UTILITY INFOMATION ONLY

UTILITY PLAN
SCALE: 1" = 50'

U-11

STATE OF CALIFORNIA - DEPARTMENT OF TRANSPORTATION
DESIGN

CALCULATED-DESIGNED BY	FUNCTIONAL SUPERVISOR	REVISED BY	PL
CHECKED BY	ARVIND K. GUPTA	DATE REVISED	7/20/09
RANJEET SINGH			
ZORA S. MANGAT			

LAST REVISION | DATE PLOTTED => 04-FEB-2010
05-19-09 | TIME PLOTTED => 14:12

BORDER LAST REVISED 4/11/2008

RELATIVE BORDER SCALE IS IN INCHES 0 1 2 3

USERNAME => trpierce
DGN FILE => 44470ukq011.dgn

CU 04236

EA 4470U1

FOR ACCURATE RIGHT OF WAY DATA,
CONTACT RIGHT OF WAY ENGINEERING
AT THE DISTRICT OFFICE.

Dist	COUNTY	ROUTE	POST MILES TOTAL PROJECT	SHEET No.	TOTAL SHEETS
04	CC	680	0.0/R12.8	184	504

Zora S. Mangat 8/7/09
REGISTERED CIVIL ENGINEER DATE

2-1-10
PLANS APPROVAL DATE

REGISTERED PROFESSIONAL ENGINEER
Z. Mangat
No. 44843
Exp 3-31-10
CIVIL
STATE OF CALIFORNIA

THE STATE OF CALIFORNIA OR ITS OFFICERS OR AGENTS SHALL NOT BE RESPONSIBLE FOR THE ACCURACY OR COMPLETENESS OF SCANNED COPIES OF THIS PLAN SHEET.

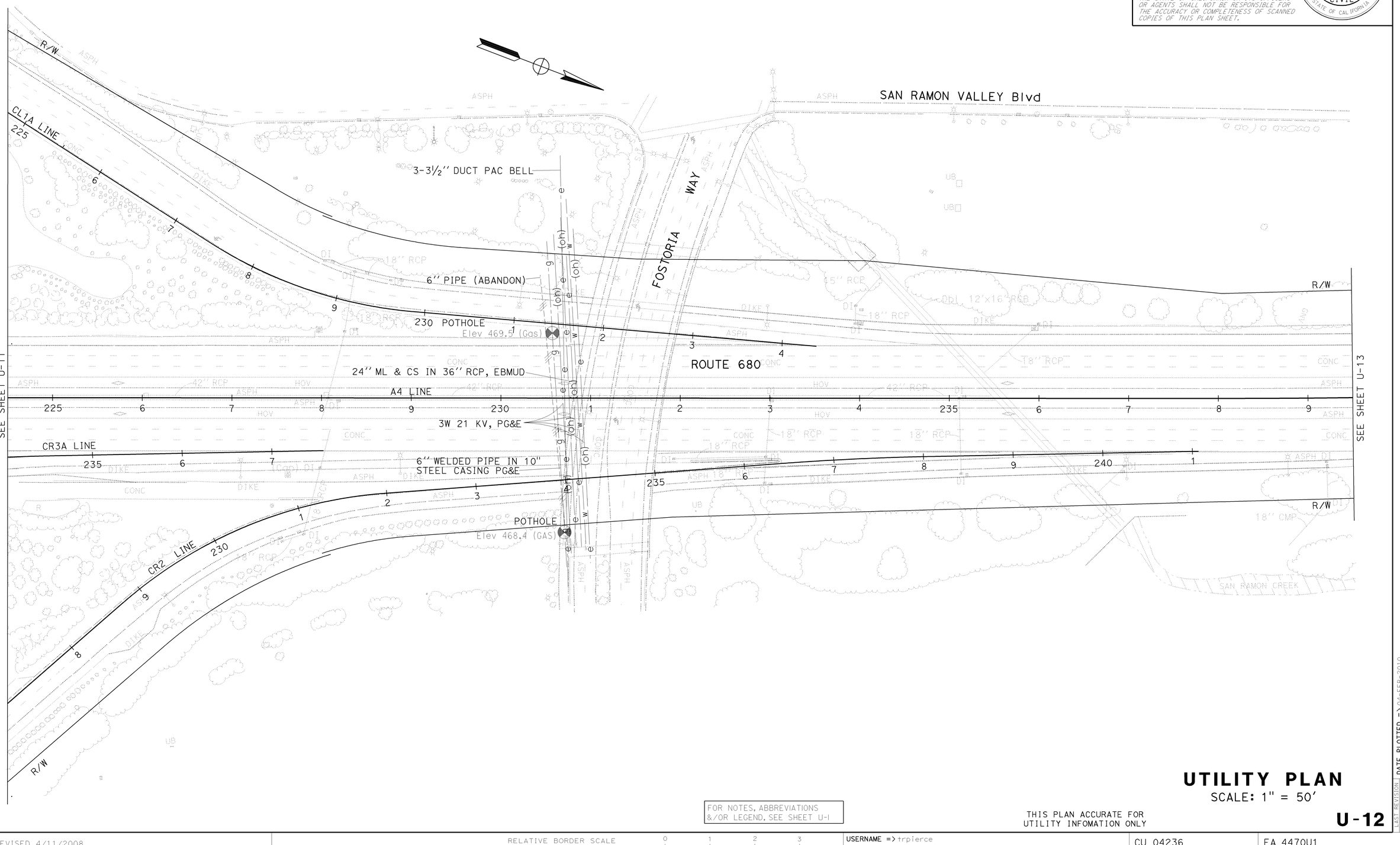

FOR NOTES, ABBREVIATIONS &/OR LEGEND, SEE SHEET U-1

THIS PLAN ACCURATE FOR UTILITY INFOMATION ONLY

UTILITY PLAN
SCALE: 1" = 50'

U-12

STATE OF CALIFORNIA - DEPARTMENT OF TRANSPORTATION
DESIGN

CALCULATED-DESIGNED BY	CHECKED BY	REVISED BY	DATE REVISED
RANJEET SINGH	ZORA S. MANGAT	PL	7/20/09

FUNCTIONAL SUPERVISOR: ARVIND K. GUPTA

LAST REVISION DATE PLOTTED => 04-FEB-2010
TIME PLOTTED => 14:13
07-30-09

BORDER LAST REVISED 4/11/2008

RELATIVE BORDER SCALE IS IN INCHES 0 1 2 3

USERNAME => trpierce
DGN FILE => 44470uka012.dgn

CU 04236

EA 4470U1

FOR ACCURATE RIGHT OF WAY DATA,
CONTACT RIGHT OF WAY ENGINEERING
AT THE DISTRICT OFFICE.

Dist	COUNTY	ROUTE	POST MILES TOTAL PROJECT	SHEET No.	TOTAL SHEETS
04	CC	680	0.0/R12.8	185	504

Zora S. Mangat 8/7/09
REGISTERED CIVIL ENGINEER DATE

2-1-10
PLANS APPROVAL DATE

REGISTERED PROFESSIONAL ENGINEER
Z. Mangat
No. 44843
Exp 3-31-10
CIVIL
STATE OF CALIFORNIA

THE STATE OF CALIFORNIA OR ITS OFFICERS OR AGENTS SHALL NOT BE RESPONSIBLE FOR THE ACCURACY OR COMPLETENESS OF SCANNED COPIES OF THIS PLAN SHEET.

FOR NOTES, ABBREVIATIONS &/OR LEGEND, SEE SHEET U-1

THIS PLAN ACCURATE FOR UTILITY INFOMATION ONLY

UTILITY PLAN
SCALE: 1" = 50'

U-13

STATE OF CALIFORNIA - DEPARTMENT OF TRANSPORTATION
Caltrans®
DESIGN

FUNCTIONAL SUPERVISOR	CALCULATED-DESIGNED BY	CHECKED BY	REVISED BY	DATE REVISED
ARVIND K. GUPTA	RANJEET SINGH	ZORA S. MANGAT	PL	7/20/09

LAST REVISION
DATE PLOTTED => 04-FEB-2010
TIME PLOTTED => 14:13
05-19-09

BORDER LAST REVISED 4/11/2008

RELATIVE BORDER SCALE IS IN INCHES 0 1 2 3

USERNAME => trpierce
DGN FILE => 44470ukq013.dgn

CU 04236

EA 4470U1

FOR ACCURATE RIGHT OF WAY DATA,
CONTACT RIGHT OF WAY ENGINEERING
AT THE DISTRICT OFFICE.

Dist	COUNTY	ROUTE	POST MILES TOTAL PROJECT	SHEET No.	TOTAL SHEETS
04	CC	680	0.0/R12.8	186	504

Zora S. Mangat 8/7/09
REGISTERED CIVIL ENGINEER DATE

2-1-10
PLANS APPROVAL DATE

REGISTERED PROFESSIONAL ENGINEER
Z. Mangat
No. 44843
Exp 3-31-10
CIVIL
STATE OF CALIFORNIA

THE STATE OF CALIFORNIA OR ITS OFFICERS OR AGENTS SHALL NOT BE RESPONSIBLE FOR THE ACCURACY OR COMPLETENESS OF SCANNED COPIES OF THIS PLAN SHEET.

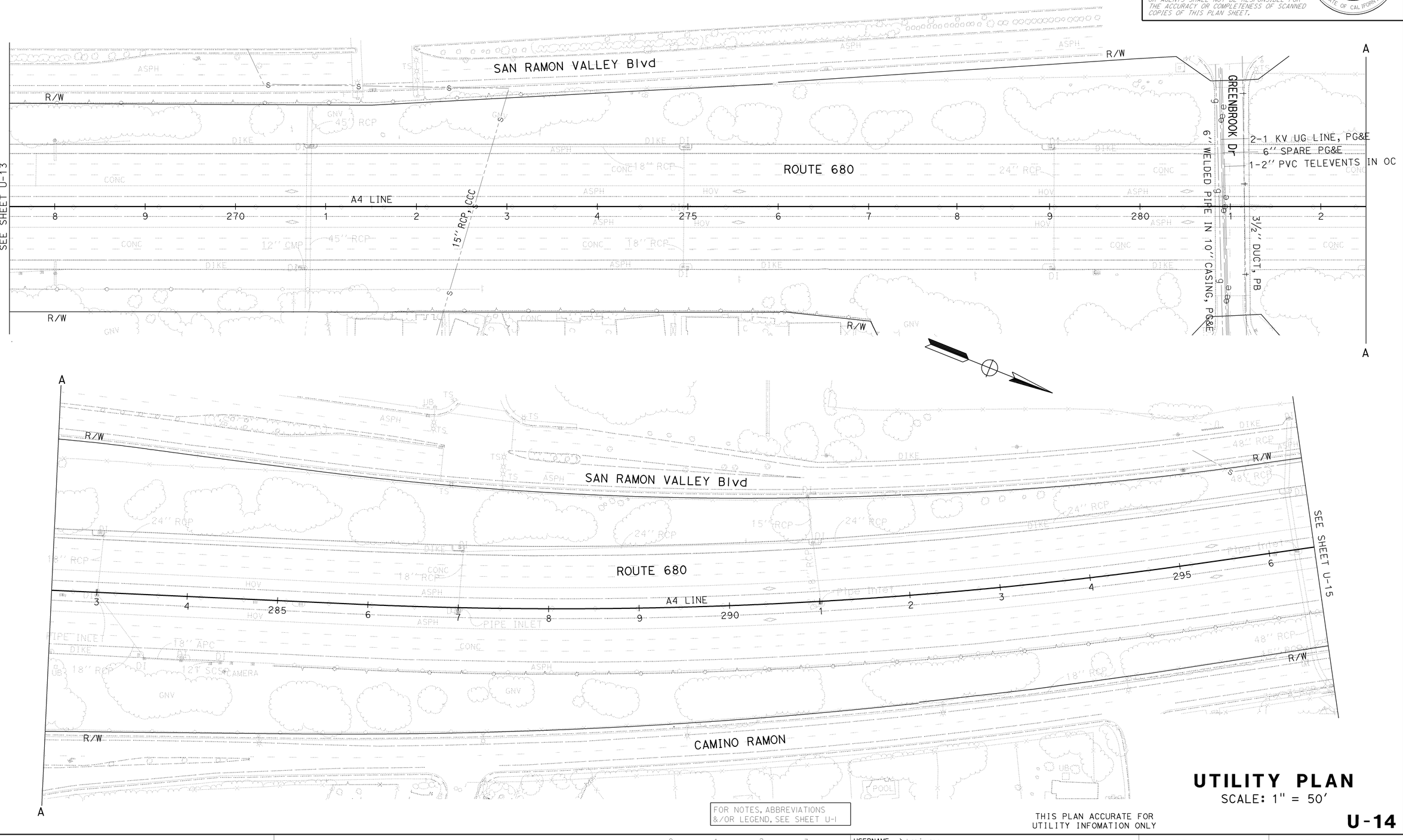

FOR NOTES, ABBREVIATIONS &/OR LEGEND, SEE SHEET U-1

THIS PLAN ACCURATE FOR UTILITY INFOMATION ONLY

UTILITY PLAN
SCALE: 1" = 50'

U-14

STATE OF CALIFORNIA - DEPARTMENT OF TRANSPORTATION
DESIGN
FUNCTIONAL SUPERVISOR: ARVIND K. GUPTA
RANJEET SINGH
ZORA S. MANGAT
CALCULATED-DESIGNED BY
CHECKED BY
REVISED BY: PL
DATE REVISED: 7/20/09

LAST REVISION
DATE PLOTTED => 04-FEB-2010
TIME PLOTTED => 14:13
05-19-09

BORDER LAST REVISED 4/11/2008
RELATIVE BORDER SCALE IS IN INCHES 0 1 2 3
USERNAME => trpierce
DGN FILE => 44470ukq014.dgn
CU 04236
EA 4470U1

FOR ACCURATE RIGHT OF WAY DATA,
CONTACT RIGHT OF WAY ENGINEERING
AT THE DISTRICT OFFICE.

Dist	COUNTY	ROUTE	POST MILES TOTAL PROJECT	SHEET No.	TOTAL SHEETS
04	CC	680	0.0/R12.8	187	504

Zora S. Mangat 8/7/09
REGISTERED CIVIL ENGINEER DATE

2-1-10
PLANS APPROVAL DATE

REGISTERED PROFESSIONAL ENGINEER
Z. Mangat
No. 44843
Exp 3-31-10
CIVIL
STATE OF CALIFORNIA

THE STATE OF CALIFORNIA OR ITS OFFICERS OR AGENTS SHALL NOT BE RESPONSIBLE FOR THE ACCURACY OR COMPLETENESS OF SCANNED COPIES OF THIS PLAN SHEET.

FOR NOTES, ABBREVIATIONS &/OR LEGEND, SEE SHEET U-1

THIS PLAN ACCURATE FOR UTILITY INFOMATION ONLY

UTILITY PLAN
SCALE: 1" = 50'

U-15

STATE OF CALIFORNIA - DEPARTMENT OF TRANSPORTATION
DESIGN
FUNCTIONAL SUPERVISOR: ARVIND K. GUPTA
CALCULATED-DESIGNED BY
CHECKED BY
RANJEET SINGH
ZORA S. MANGAT
REVISED BY: PL
DATE REVISED: 7/20/09

LAST REVISION | DATE PLOTTED => 04-FEB-2010
05-19-09 | TIME PLOTTED => 14:13

BORDER LAST REVISED 4/11/2008
RELATIVE BORDER SCALE IS IN INCHES 0 1 2 3
USERNAME => trpierce
DGN FILE => 44470ukq015.dgn
CU 04236
EA 4470U1

FOR ACCURATE RIGHT OF WAY DATA,
CONTACT RIGHT OF WAY ENGINEERING
AT THE DISTRICT OFFICE.

Dist	COUNTY	ROUTE	POST MILES TOTAL PROJECT	SHEET No.	TOTAL SHEETS
04	CC	680	0.0/R12.8	188	504

Zora S. Mangat 8/7/09
REGISTERED CIVIL ENGINEER DATE

2-1-10
PLANS APPROVAL DATE

REGISTERED PROFESSIONAL ENGINEER
Z. Mangat
No. 44843
Exp 3-31-10
CIVIL
STATE OF CALIFORNIA

THE STATE OF CALIFORNIA OR ITS OFFICERS OR AGENTS SHALL NOT BE RESPONSIBLE FOR THE ACCURACY OR COMPLETENESS OF SCANNED COPIES OF THIS PLAN SHEET.

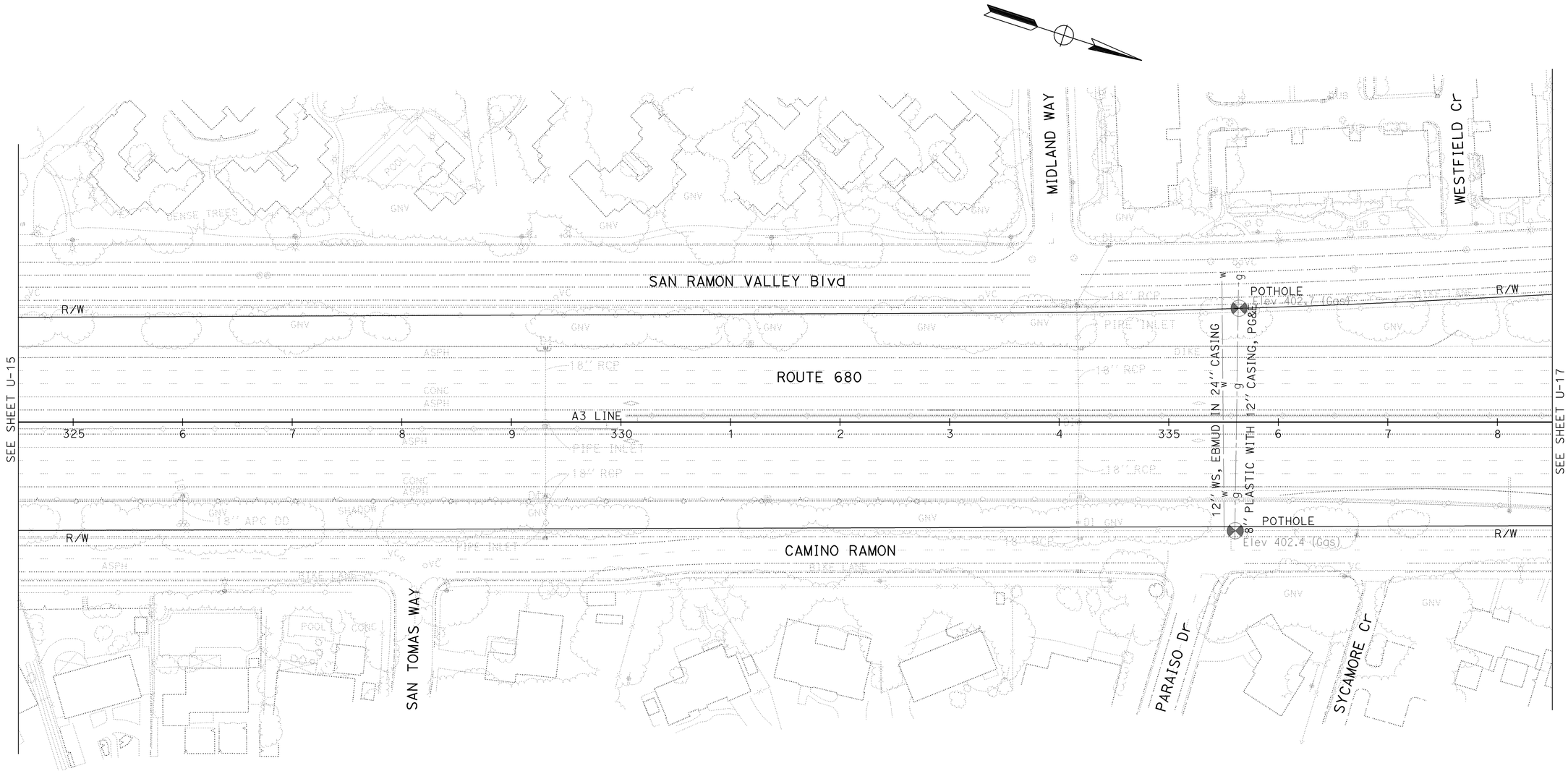

FOR NOTES, ABBREVIATIONS &/OR LEGEND, SEE SHEET U-1

THIS PLAN ACCURATE FOR UTILITY INFOMATION ONLY

UTILITY PLAN
SCALE: 1" = 50'

U-16

STATE OF CALIFORNIA - DEPARTMENT OF TRANSPORTATION
DESIGN
FUNCTIONAL SUPERVISOR: ARVIND K. GUPTA
CALCULATED-DESIGNED BY: RANJEET SINGH
CHECKED BY: ZORA S. MANGAT
REVISED BY: PL
DATE REVISED: 7/20/09

LAST REVISION 07-30-09
DATE PLOTTED => 04-FEB-2010
TIME PLOTTED => 11:28

BORDER LAST REVISED 4/11/2008
RELATIVE BORDER SCALE IS IN INCHES 0 1 2 3
USERNAME => trstrk
DGN FILE => 44470uka016.dgn
CU 04236
EA 4470U1

FOR ACCURATE RIGHT OF WAY DATA,
CONTACT RIGHT OF WAY ENGINEERING
AT THE DISTRICT OFFICE.

Dist	COUNTY	ROUTE	POST MILES TOTAL PROJECT	SHEET No.	TOTAL SHEETS
04	CC	680	0.0/R12.8	189	504

Zora S. Mangat 8/7/09
REGISTERED CIVIL ENGINEER DATE

2-1-10
PLANS APPROVAL DATE

REGISTERED PROFESSIONAL ENGINEER
Z. Mangat
No. 44843
Exp 3-31-10
CIVIL
STATE OF CALIFORNIA

THE STATE OF CALIFORNIA OR ITS OFFICERS OR AGENTS SHALL NOT BE RESPONSIBLE FOR THE ACCURACY OR COMPLETENESS OF SCANNED COPIES OF THIS PLAN SHEET.

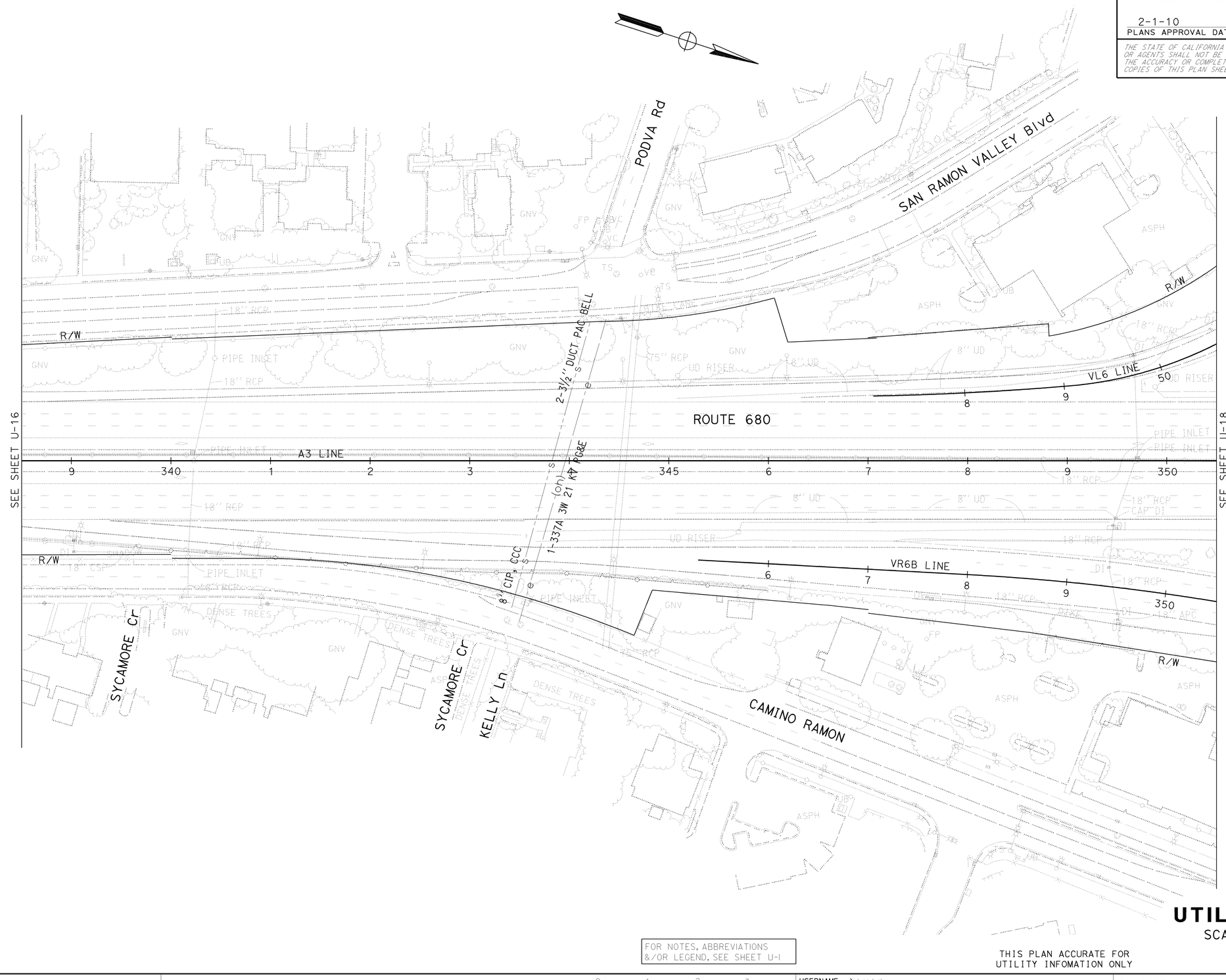

FOR NOTES, ABBREVIATIONS &/OR LEGEND, SEE SHEET U-1

THIS PLAN ACCURATE FOR UTILITY INFOMATION ONLY

UTILITY PLAN

SCALE: 1" = 50'

U-17

STATE OF CALIFORNIA - DEPARTMENT OF TRANSPORTATION
DESIGN
Caltrans

FUNCTIONAL SUPERVISOR: ARVIND K. GUPTA
CALCULATED-DESIGNED BY: RANJEET SINGH
CHECKED BY: ZORA S. MANGAT
REVISED BY: PL
DATE REVISED: 7/20/09

LAST REVISION DATE PLOTTED => 04-FEB-2010
LAST REVISION TIME PLOTTED => 11:28
05-19-09

BORDER LAST REVISED 4/11/2008

RELATIVE BORDER SCALE IS IN INCHES 0 1 2 3

USERNAME => trstrk
DGN FILE => 44470uka017.dgn

CU 04236

EA 4470U1

FOR ACCURATE RIGHT OF WAY DATA,
CONTACT RIGHT OF WAY ENGINEERING
AT THE DISTRICT OFFICE.

Dist	COUNTY	ROUTE	POST MILES TOTAL PROJECT	SHEET No.	TOTAL SHEETS
04	CC	680	0.0/R12.8	190	504

Zora S. Mangat 8/7/09
REGISTERED CIVIL ENGINEER DATE

2-1-10
PLANS APPROVAL DATE

REGISTERED PROFESSIONAL ENGINEER
Z. Mangat
No. 44843
Exp. 3-31-10
CIVIL
STATE OF CALIFORNIA

THE STATE OF CALIFORNIA OR ITS OFFICERS OR AGENTS SHALL NOT BE RESPONSIBLE FOR THE ACCURACY OR COMPLETENESS OF SCANNED COPIES OF THIS PLAN SHEET.

FOR NOTES, ABBREVIATIONS &/OR LEGEND, SEE SHEET U-1

THIS PLAN ACCURATE FOR UTILITY INFOMATION ONLY

UTILITY PLAN

SCALE: 1" = 50'

U-18

STATE OF CALIFORNIA - DEPARTMENT OF TRANSPORTATION
DESIGN
FUNCTIONAL SUPERVISOR: ARVIND K. GUPTA
CALCULATED-DESIGNED BY: RANJEET SINGH
CHECKED BY: ZORA S. MANGAT
REVISED BY: PL
DATE REVISED: 7/20/09

LAST REVISION DATE PLOTTED => 04-FEB-2010
TIME PLOTTED => 11:28

BORDER LAST REVISED 4/11/2008
RELATIVE BORDER SCALE IS IN INCHES 0 1 2 3
USERNAME => trstrk
DGN FILE => 44470uka018.dgn
CU 04236
EA 4470U1

FOR ACCURATE RIGHT OF WAY DATA,
CONTACT RIGHT OF WAY ENGINEERING
AT THE DISTRICT OFFICE.

Dist	COUNTY	ROUTE	POST MILES TOTAL PROJECT	SHEET No.	TOTAL SHEETS
04	CC	680	0.0/R12.8	191	504

Zora S. Mangat 8/7/09
REGISTERED CIVIL ENGINEER DATE

2-1-10
PLANS APPROVAL DATE

REGISTERED PROFESSIONAL ENGINEER
Z. Mangat
No. 44843
Exp 3-31-10
CIVIL
STATE OF CALIFORNIA

THE STATE OF CALIFORNIA OR ITS OFFICERS OR AGENTS SHALL NOT BE RESPONSIBLE FOR THE ACCURACY OR COMPLETENESS OF SCANNED COPIES OF THIS PLAN SHEET.

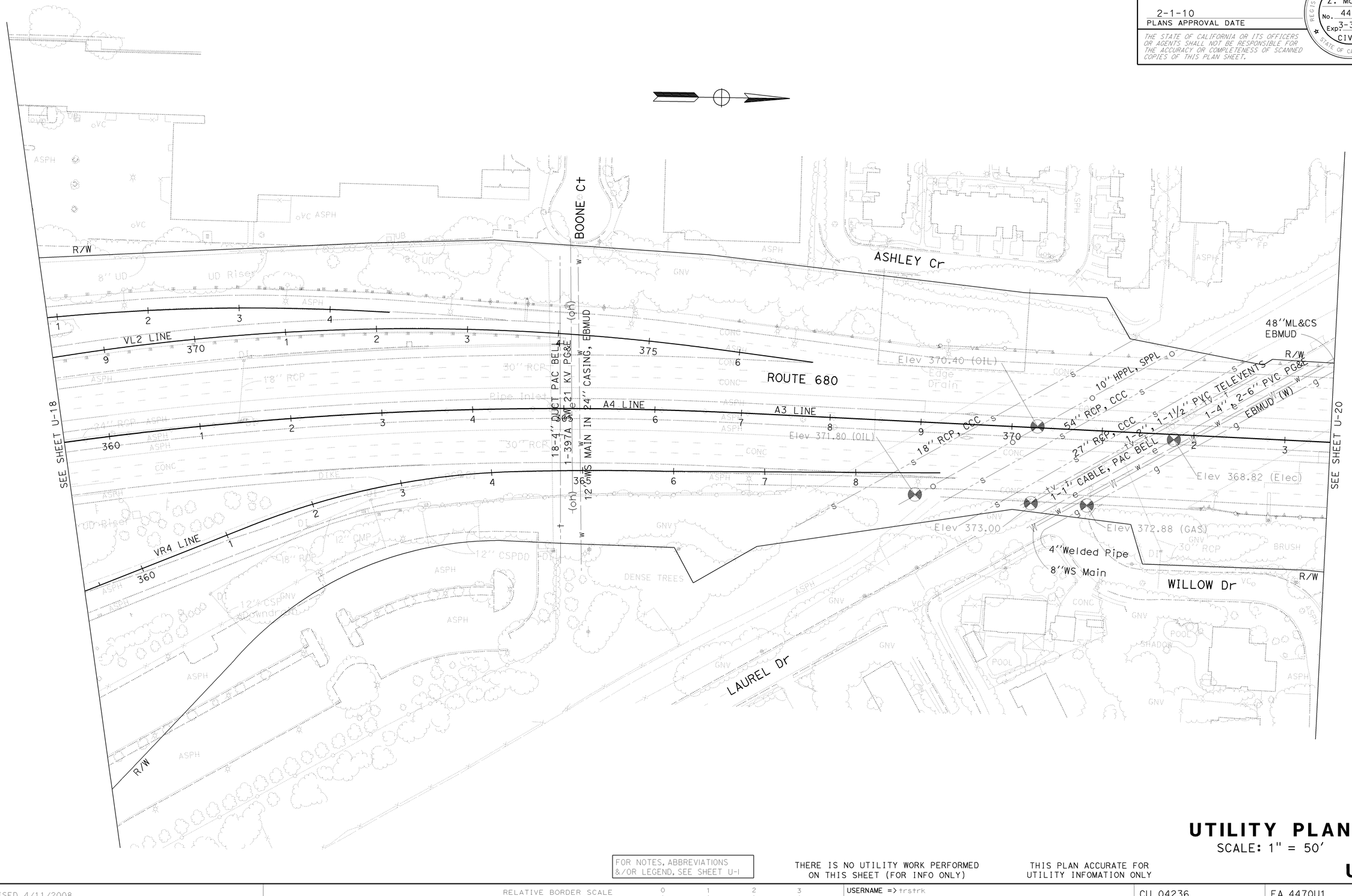

UTILITY PLAN
SCALE: 1" = 50'

U-19

FOR NOTES, ABBREVIATIONS &/OR LEGEND, SEE SHEET U-1

THERE IS NO UTILITY WORK PERFORMED ON THIS SHEET (FOR INFO ONLY)

THIS PLAN ACCURATE FOR UTILITY INFOMATION ONLY

CALCULATED-DESIGNED BY: PL
CHECKED BY: RANJEET SINGH
REVISED BY: ZORA S. MANGAT
DATE REVISED: 7/20/09
FUNCTIONAL SUPERVISOR: ARVIND K. GUPTA

STATE OF CALIFORNIA - DEPARTMENT OF TRANSPORTATION
DESIGN

LAST REVISION DATE PLOTTED => 04-FEB-2010
TIME PLOTTED => 11:28
11-10-09

BORDER LAST REVISED 4/11/2008

RELATIVE BORDER SCALE IS IN INCHES 0 1 2 3

USERNAME => trstrk
DGN FILE => 44470uka019.dgn

CU 04236

EA 4470U1

FOR ACCURATE RIGHT OF WAY DATA,
CONTACT RIGHT OF WAY ENGINEERING
AT THE DISTRICT OFFICE.

Dist	COUNTY	ROUTE	POST MILES TOTAL PROJECT	SHEET No.	TOTAL SHEETS
04	CC	680	0.0/R12.8	192	504

Zora S. Mangat 8/7/09
REGISTERED CIVIL ENGINEER DATE

2-1-10
PLANS APPROVAL DATE

REGISTERED PROFESSIONAL ENGINEER
Z. Mangat
No. 44843
Exp 3-31-10
CIVIL
STATE OF CALIFORNIA

THE STATE OF CALIFORNIA OR ITS OFFICERS OR AGENTS SHALL NOT BE RESPONSIBLE FOR THE ACCURACY OR COMPLETENESS OF SCANNED COPIES OF THIS PLAN SHEET.

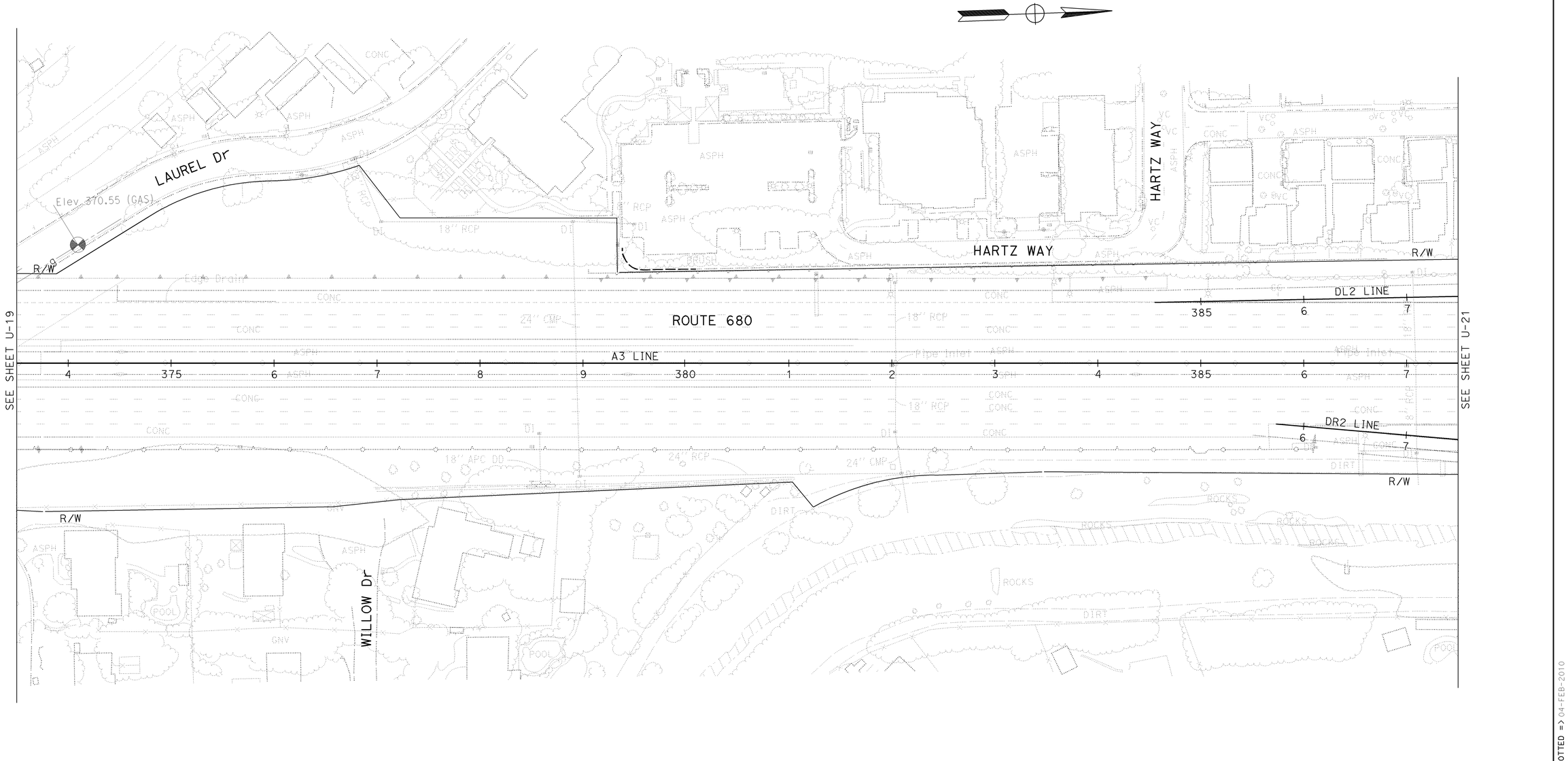

FOR NOTES, ABBREVIATIONS &/OR LEGEND, SEE SHEET U-1

UTILITY PLAN

SCALE: 1" = 50'

THIS PLAN ACCURATE FOR UTILITY INFOMATION ONLY

U-20

STATE OF CALIFORNIA - DEPARTMENT OF TRANSPORTATION
DESIGN
FUNCTIONAL SUPERVISOR: ARVIND K. GUPTA
CALCULATED-DESIGNED BY: RANJEET SINGH
CHECKED BY: ZORA S. MANGAT
REVISED BY: PL
DATE REVISED: 7/20/09

LAST REVISION DATE PLOTTED => 04-FEB-2010
TIME PLOTTED => 11:29
05-19-09

BORDER LAST REVISED 4/11/2008
RELATIVE BORDER SCALE IS IN INCHES 0 1 2 3
USERNAME => trstrk
DGN FILE => 44470uka020.dgn
CU 04236
EA 4470U1

FOR ACCURATE RIGHT OF WAY DATA,
CONTACT RIGHT OF WAY ENGINEERING
AT THE DISTRICT OFFICE.

Dist	COUNTY	ROUTE	POST MILES TOTAL PROJECT	SHEET No.	TOTAL SHEETS
04	CC	680	0.0/R12.8	193	504

Zora S. Mangat 8/7/09
REGISTERED CIVIL ENGINEER DATE

2-1-10
PLANS APPROVAL DATE

REGISTERED PROFESSIONAL ENGINEER
Z. Mangat
No. 44843
Exp 3-31-10
CIVIL
STATE OF CALIFORNIA

THE STATE OF CALIFORNIA OR ITS OFFICERS OR AGENTS SHALL NOT BE RESPONSIBLE FOR THE ACCURACY OR COMPLETENESS OF SCANNED COPIES OF THIS PLAN SHEET.

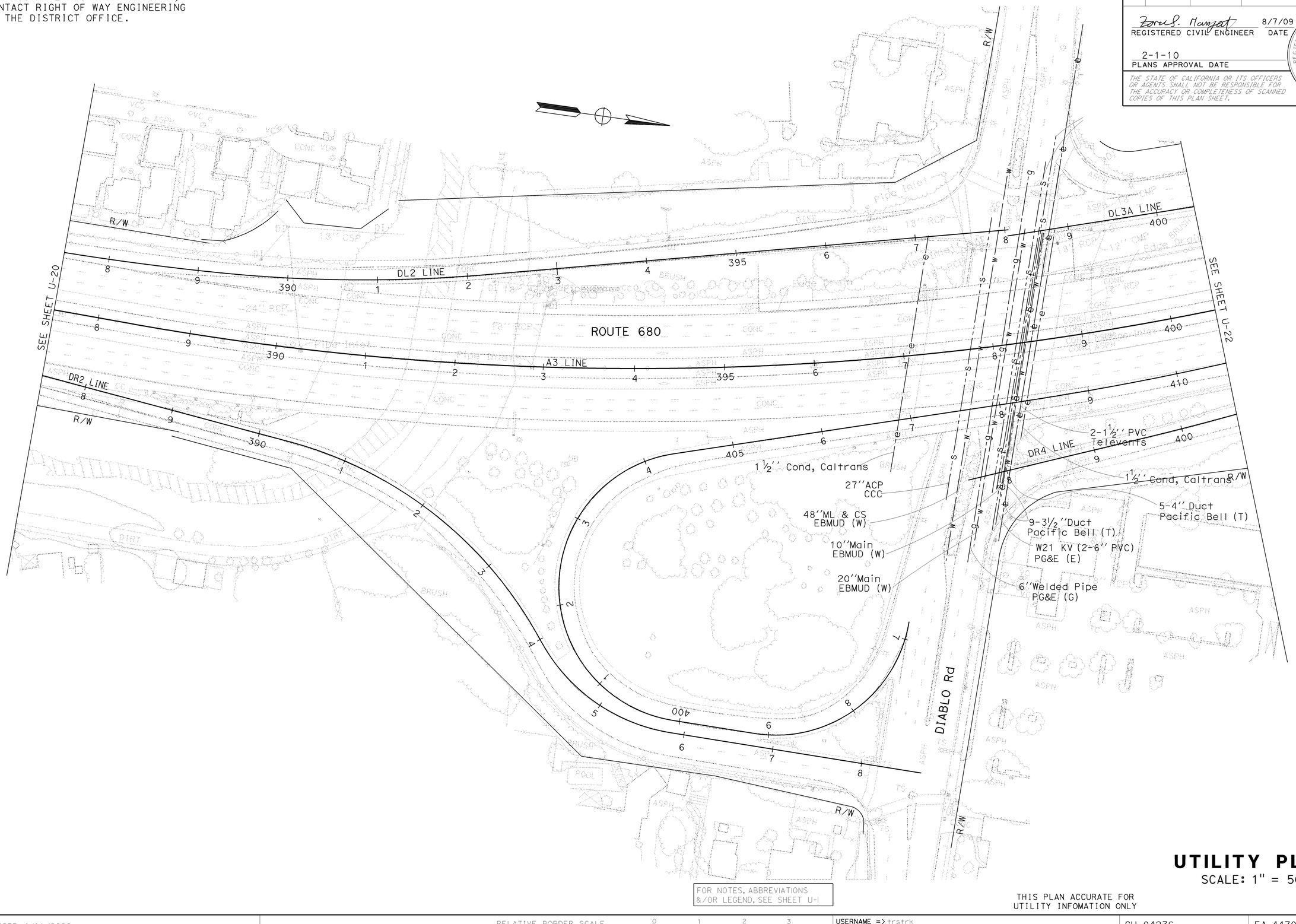

FOR NOTES, ABBREVIATIONS &/OR LEGEND, SEE SHEET U-1

THIS PLAN ACCURATE FOR UTILITY INFOMATION ONLY

UTILITY PLAN
SCALE: 1" = 50'

U-21

REVISED BY	DATE REVISED
PL	7/20/09

CALCULATED-DESIGNED BY: RANJEET SINGH
CHECKED BY: ZORA S. MANGAT
FUNCTIONAL SUPERVISOR: ARVIND K. GUPTA

STATE OF CALIFORNIA - DEPARTMENT OF TRANSPORTATION
Caltrans
DESIGN

LAST REVISION DATE PLOTTED => 04-FEB-2010
05-19-09 TIME PLOTTED => 11:29

BORDER LAST REVISED 4/11/2008

RELATIVE BORDER SCALE IS IN INCHES 0 1 2 3

USERNAME => trstrk
DGN FILE => 44470uka021.dgn

CU 04236

EA 4470U1

FOR ACCURATE RIGHT OF WAY DATA,
CONTACT RIGHT OF WAY ENGINEERING
AT THE DISTRICT OFFICE.

Dist	COUNTY	ROUTE	POST MILES TOTAL PROJECT	SHEET No.	TOTAL SHEETS
04	CC	680	0.0/R12.8	194	504

Zora S. Mangat 8/7/09
REGISTERED CIVIL ENGINEER DATE

2-1-10
PLANS APPROVAL DATE

REGISTERED PROFESSIONAL ENGINEER
Z. Mangat
No. 44843
Exp 3-31-10
CIVIL
STATE OF CALIFORNIA

THE STATE OF CALIFORNIA OR ITS OFFICERS OR AGENTS SHALL NOT BE RESPONSIBLE FOR THE ACCURACY OR COMPLETENESS OF SCANNED COPIES OF THIS PLAN SHEET.

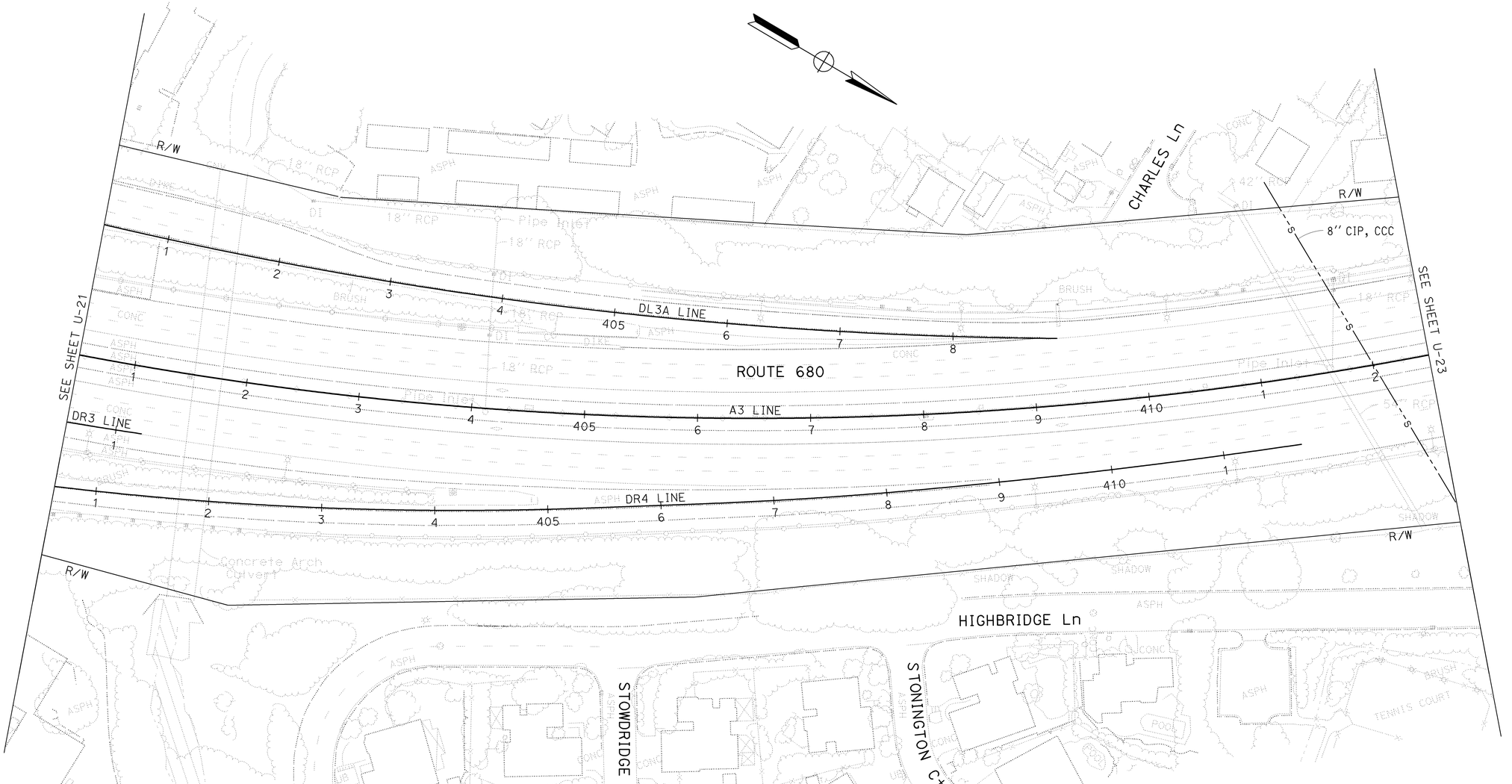

FOR NOTES, ABBREVIATIONS &/OR LEGEND, SEE SHEET U-1

UTILITY PLAN

SCALE: 1" = 50'

THIS PLAN ACCURATE FOR UTILITY INFOMATION ONLY

U-22

STATE OF CALIFORNIA - DEPARTMENT OF TRANSPORTATION
DESIGN
FUNCTIONAL SUPERVISOR: ARVIND K. GUPTA
CALCULATED-DESIGNED BY: RANJEET SINGH
CHECKED BY: ZORA S. MANGAT
REVISED BY: PL
DATE REVISED: 7/20/09

LAST REVISION | DATE PLOTTED => 04-FEB-2010
05-19-09 | TIME PLOTTED => 11:29

BORDER LAST REVISED 4/11/2008

RELATIVE BORDER SCALE IS IN INCHES 0 1 2 3

USERNAME => trstrk
DGN FILE => 4447Uuka022.dgn

CU 04236

EA 4470U1

FOR ACCURATE RIGHT OF WAY DATA,
CONTACT RIGHT OF WAY ENGINEERING
AT THE DISTRICT OFFICE.

Dist	COUNTY	ROUTE	POST MILES TOTAL PROJECT	SHEET No.	TOTAL SHEETS
04	CC	680	0.0/R12.8	195	504

Zora S. Mangat 8/7/09
REGISTERED CIVIL ENGINEER DATE

2-1-10
PLANS APPROVAL DATE

REGISTERED PROFESSIONAL ENGINEER
Z. Mangat
No. 44843
Exp 3-31-10
CIVIL
STATE OF CALIFORNIA

THE STATE OF CALIFORNIA OR ITS OFFICERS OR AGENTS SHALL NOT BE RESPONSIBLE FOR THE ACCURACY OR COMPLETENESS OF SCANNED COPIES OF THIS PLAN SHEET.

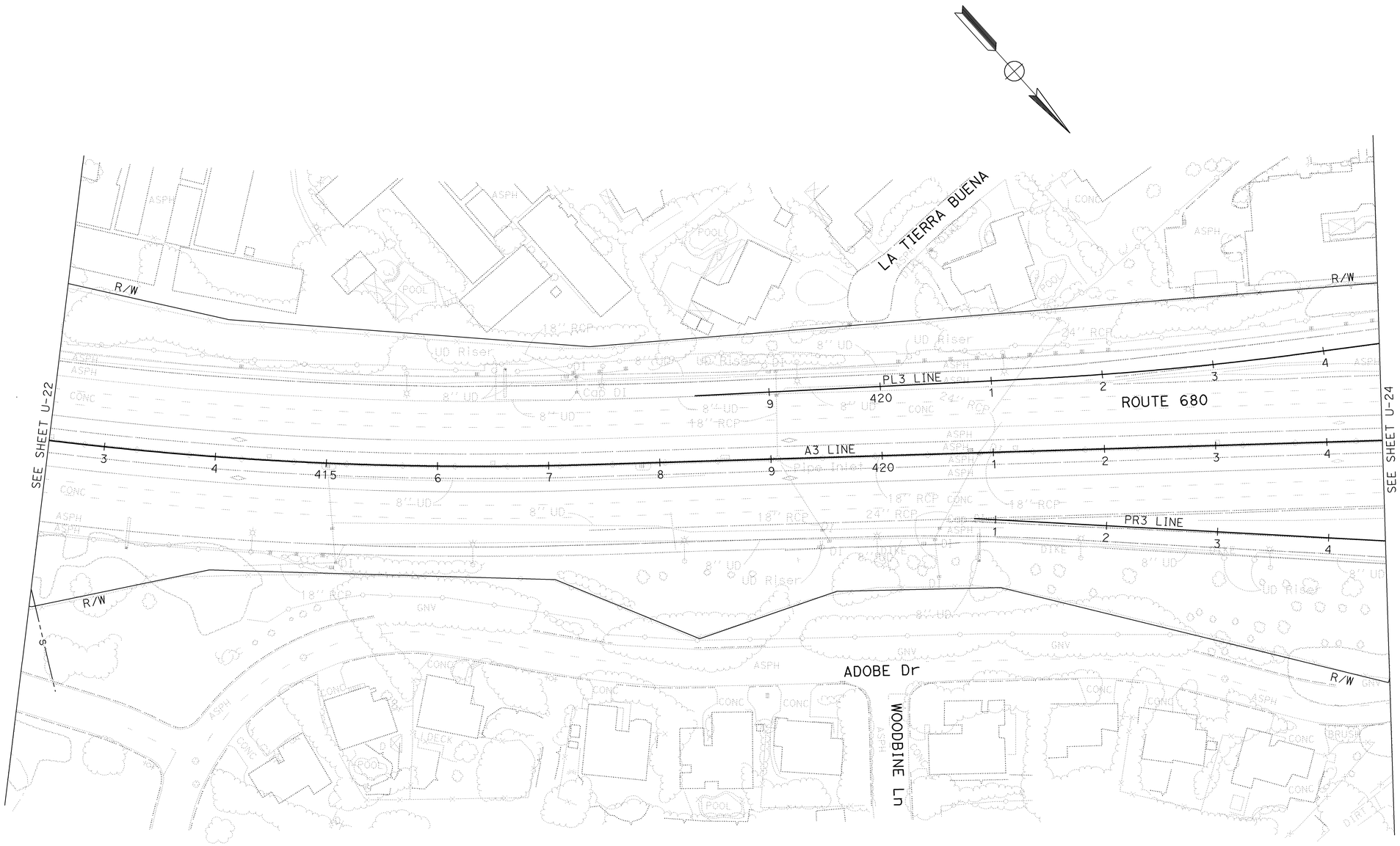

FOR NOTES, ABBREVIATIONS &/OR LEGEND, SEE SHEET U-1

THIS PLAN ACCURATE FOR UTILITY INFOMATION ONLY

UTILITY PLAN

SCALE: 1" = 50'

U-23

STATE OF CALIFORNIA - DEPARTMENT OF TRANSPORTATION
DESIGN
FUNCTIONAL SUPERVISOR: ARVIND K. GUPTA
CALCULATED-DESIGNED BY: RANJEET SINGH
CHECKED BY: ZORA S. MANGAT
REVISED BY: PL
DATE REVISED: 7/20/09

LAST REVISION
DATE PLOTTED => 04-FEB-2010
TIME PLOTTED => 11:29
05-19-09

BORDER LAST REVISED 4/11/2008
RELATIVE BORDER SCALE IS IN INCHES 0 1 2 3
USERNAME => trstrk
DGN FILE => 44470uka023.dgn
CU 04236
EA 4470U1

FOR ACCURATE RIGHT OF WAY DATA,
CONTACT RIGHT OF WAY ENGINEERING
AT THE DISTRICT OFFICE.

Dist	COUNTY	ROUTE	POST MILES TOTAL PROJECT	SHEET No.	TOTAL SHEETS
04	CC	680	0.0/R12.8	196	504

Zora S. Mangat 8/7/09
REGISTERED CIVIL ENGINEER DATE

2-1-10
PLANS APPROVAL DATE

REGISTERED PROFESSIONAL ENGINEER
Z. Mangat
No. 44843
Exp 3-31-10
CIVIL
STATE OF CALIFORNIA

THE STATE OF CALIFORNIA OR ITS OFFICERS OR AGENTS SHALL NOT BE RESPONSIBLE FOR THE ACCURACY OR COMPLETENESS OF SCANNED COPIES OF THIS PLAN SHEET.

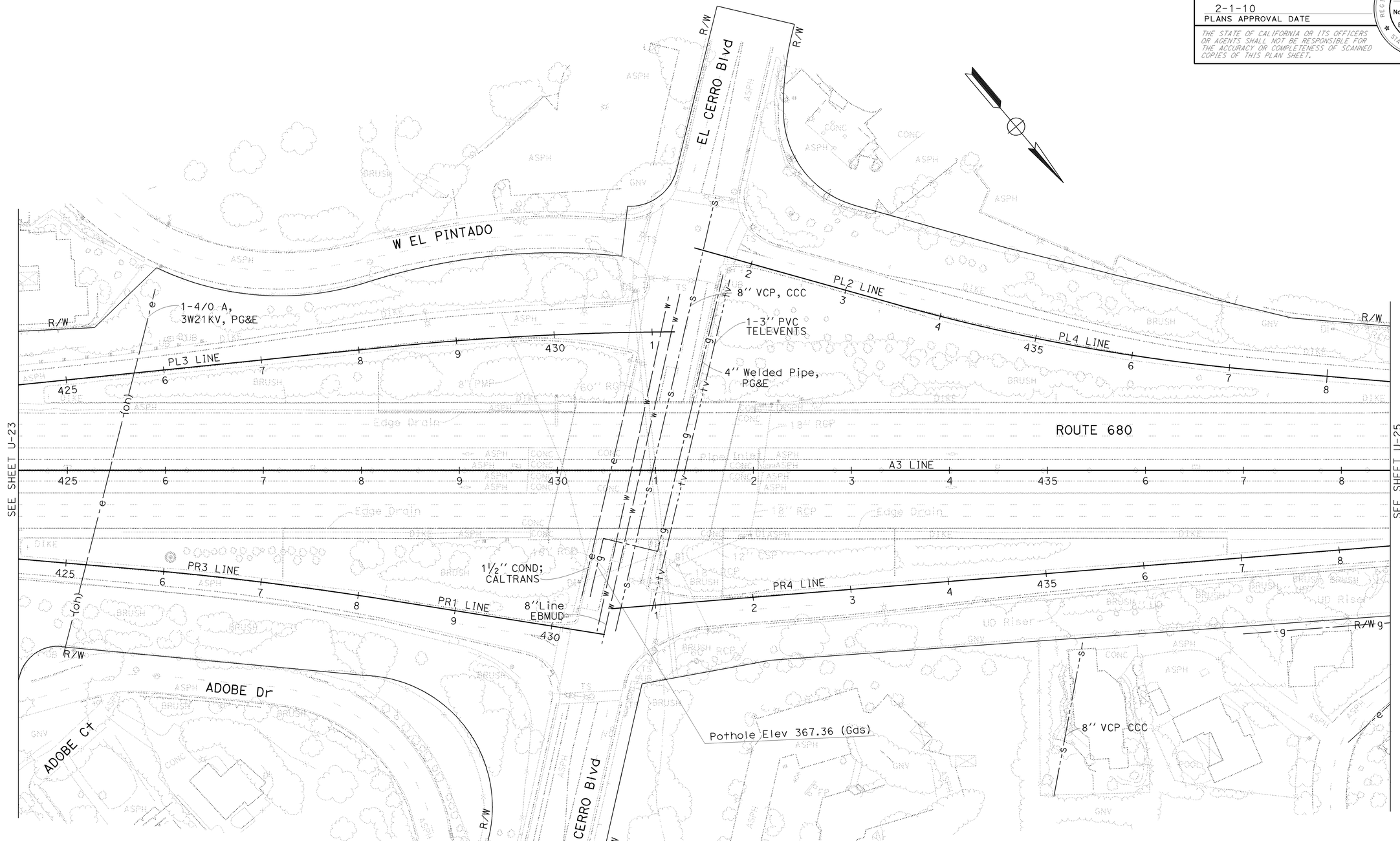

FOR NOTES, ABBREVIATIONS &/OR LEGEND, SEE SHEET U-1

UTILITY PLAN

SCALE: 1" = 50'

THIS PLAN ACCURATE FOR UTILITY INFOMATION ONLY

U-24

CALCULATED-DESIGNED BY: RANJEET SINGH
CHECKED BY: ZORA S. MANGAT
REVISED BY: PL
DATE REVISED: 7/20/09
FUNCTIONAL SUPERVISOR: ARVIND K. GUPTA

STATE OF CALIFORNIA - DEPARTMENT OF TRANSPORTATION
Caltrans
DESIGN

LAST REVISION DATE PLOTTED => 04-FEB-2010
TIME PLOTTED => 11:29
05-19-09

BORDER LAST REVISED 4/11/2008

RELATIVE BORDER SCALE IS IN INCHES 0 1 2 3

USERNAME => trstrk
DGN FILE => 44470uka024.dgn

CU 04236

EA 4470U1

FOR ACCURATE RIGHT OF WAY DATA,
CONTACT RIGHT OF WAY ENGINEERING
AT THE DISTRICT OFFICE.

Dist	COUNTY	ROUTE	POST MILES TOTAL PROJECT	SHEET No.	TOTAL SHEETS
04	CC	680	0.0/R12.8	197	504

Zora S. Mangat 8/7/09
REGISTERED CIVIL ENGINEER DATE

2-1-10
PLANS APPROVAL DATE

REGISTERED PROFESSIONAL ENGINEER
Z. Mangat
No. 44843
Exp 3-31-10
CIVIL
STATE OF CALIFORNIA

THE STATE OF CALIFORNIA OR ITS OFFICERS OR AGENTS SHALL NOT BE RESPONSIBLE FOR THE ACCURACY OR COMPLETENESS OF SCANNED COPIES OF THIS PLAN SHEET.

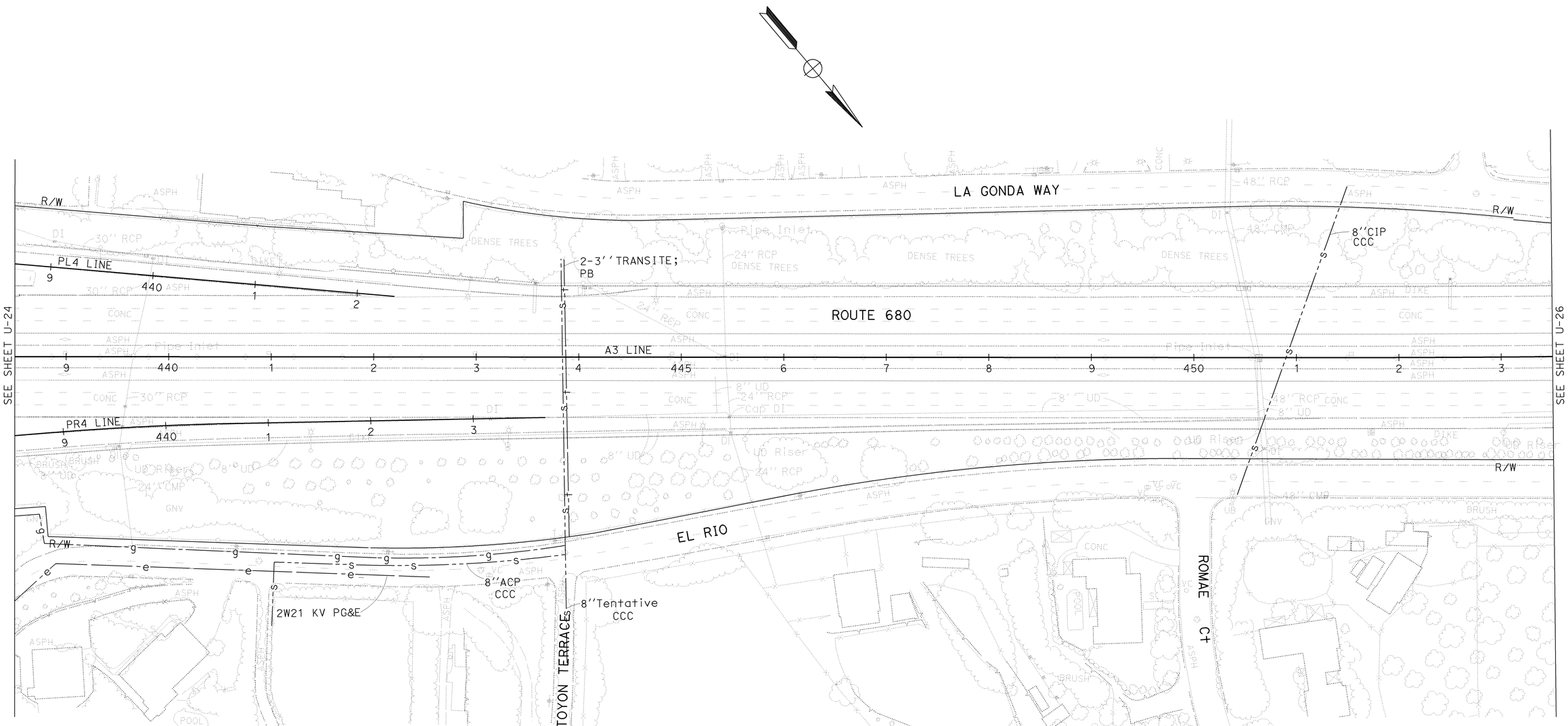

FOR NOTES, ABBREVIATIONS &/OR LEGEND, SEE SHEET U-1

THIS PLAN ACCURATE FOR UTILITY INFOMATION ONLY

UTILITY PLAN
SCALE: 1" = 50'

U-25

STATE OF CALIFORNIA - DEPARTMENT OF TRANSPORTATION
DESIGN
Gutans
FUNCTIONAL SUPERVISOR: ARVIND K. GUPTA
CALCULATED-DESIGNED BY: RANJEET SINGH
CHECKED BY: ZORA S. MANGAT
REVISED BY: PL
DATE REVISED: 7/20/09
LAST REVISION DATE PLOTTED => 04-FEB-2010
TIME PLOTTED => 11:29
05-19-09

BORDER LAST REVISED 4/11/2008
RELATIVE BORDER SCALE IS IN INCHES 0 1 2 3
USERNAME => trstrk
DGN FILE => 44470ukq025.dgn
CU 04236
EA 4470U1

FOR ACCURATE RIGHT OF WAY DATA,
CONTACT RIGHT OF WAY ENGINEERING
AT THE DISTRICT OFFICE.

Dist	COUNTY	ROUTE	POST MILES TOTAL PROJECT	SHEET No.	TOTAL SHEETS
04	CC	680	0.0/R12.8	198	504

Zora S. Mangat 8/7/09
REGISTERED CIVIL ENGINEER DATE

2-1-10
PLANS APPROVAL DATE

REGISTERED PROFESSIONAL ENGINEER
Z. Mangat
No. 44843
Exp 3-31-10
CIVIL
STATE OF CALIFORNIA

THE STATE OF CALIFORNIA OR ITS OFFICERS OR AGENTS SHALL NOT BE RESPONSIBLE FOR THE ACCURACY OR COMPLETENESS OF SCANNED COPIES OF THIS PLAN SHEET.

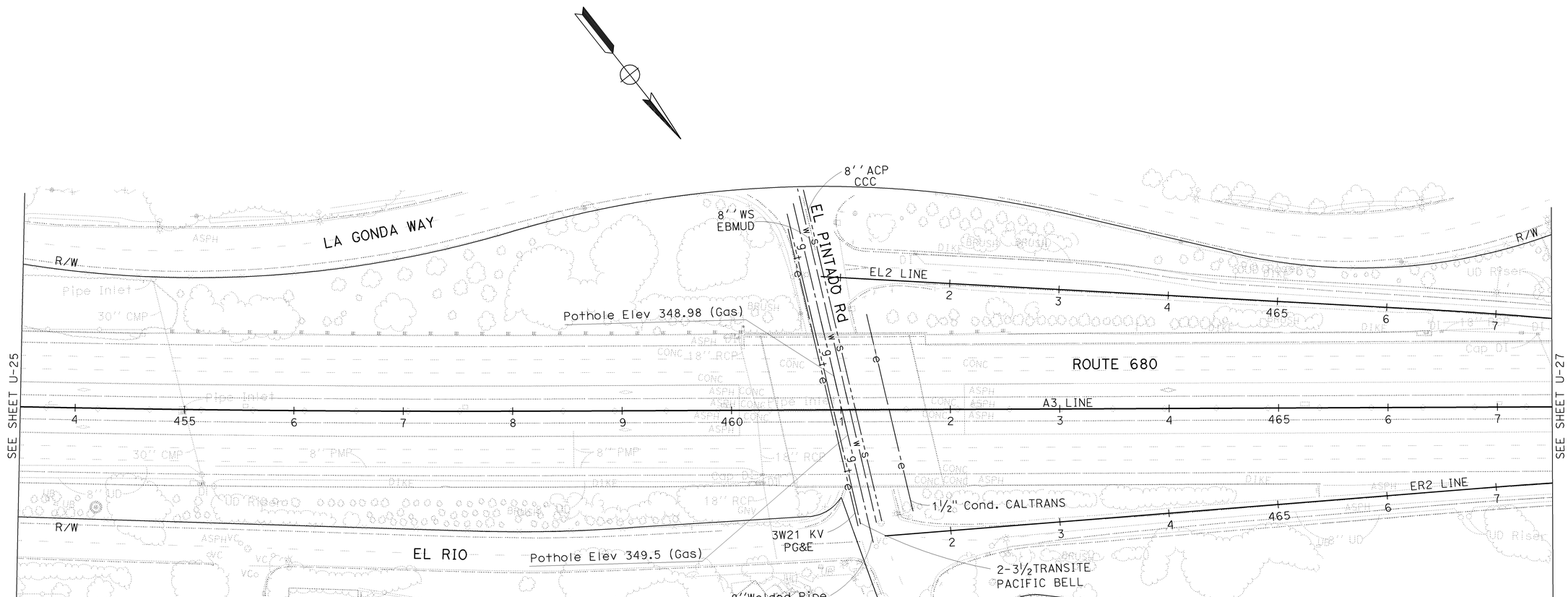

FOR NOTES, ABBREVIATIONS &/OR LEGEND, SEE SHEET U-1

THIS PLAN ACCURATE FOR UTILITY INFOMATION ONLY

UTILITY PLAN
SCALE: 1" = 50'

U-26

STATE OF CALIFORNIA - DEPARTMENT OF TRANSPORTATION
Caltrans®
DESIGN
FUNCTIONAL SUPERVISOR: ARVIND K. GUPTA
CALCULATED-DESIGNED BY: RANJEET SINGH
CHECKED BY: ZORA S. MANGAT
REVISED BY: PL
DATE REVISED: 7/20/09

LAST REVISION | DATE PLOTTED => 04-FEB-2010
TIME PLOTTED => 11:29
05-19-09

BORDER LAST REVISED 4/11/2008
RELATIVE BORDER SCALE IS IN INCHES 0 1 2 3
USERNAME => trstrk
DGN FILE => 44470uka026.dgn
CU 04236
EA 4470U1

Dist	COUNTY	ROUTE	POST MILES TOTAL PROJECT	SHEET No.	TOTAL SHEETS
04	CC	680	0.0/R12.8	199	504

Zora S. Mangat 8/7/09
REGISTERED CIVIL ENGINEER DATE

2-1-10
PLANS APPROVAL DATE

REGISTERED PROFESSIONAL ENGINEER
Z. Mangat
No. 44843
Exp. 3-31-10
CIVIL
STATE OF CALIFORNIA

THE STATE OF CALIFORNIA OR ITS OFFICERS OR AGENTS SHALL NOT BE RESPONSIBLE FOR THE ACCURACY OR COMPLETENESS OF SCANNED COPIES OF THIS PLAN SHEET.

FOR ACCURATE RIGHT OF WAY DATA, CONTACT RIGHT OF WAY ENGINEERING AT THE DISTRICT OFFICE.

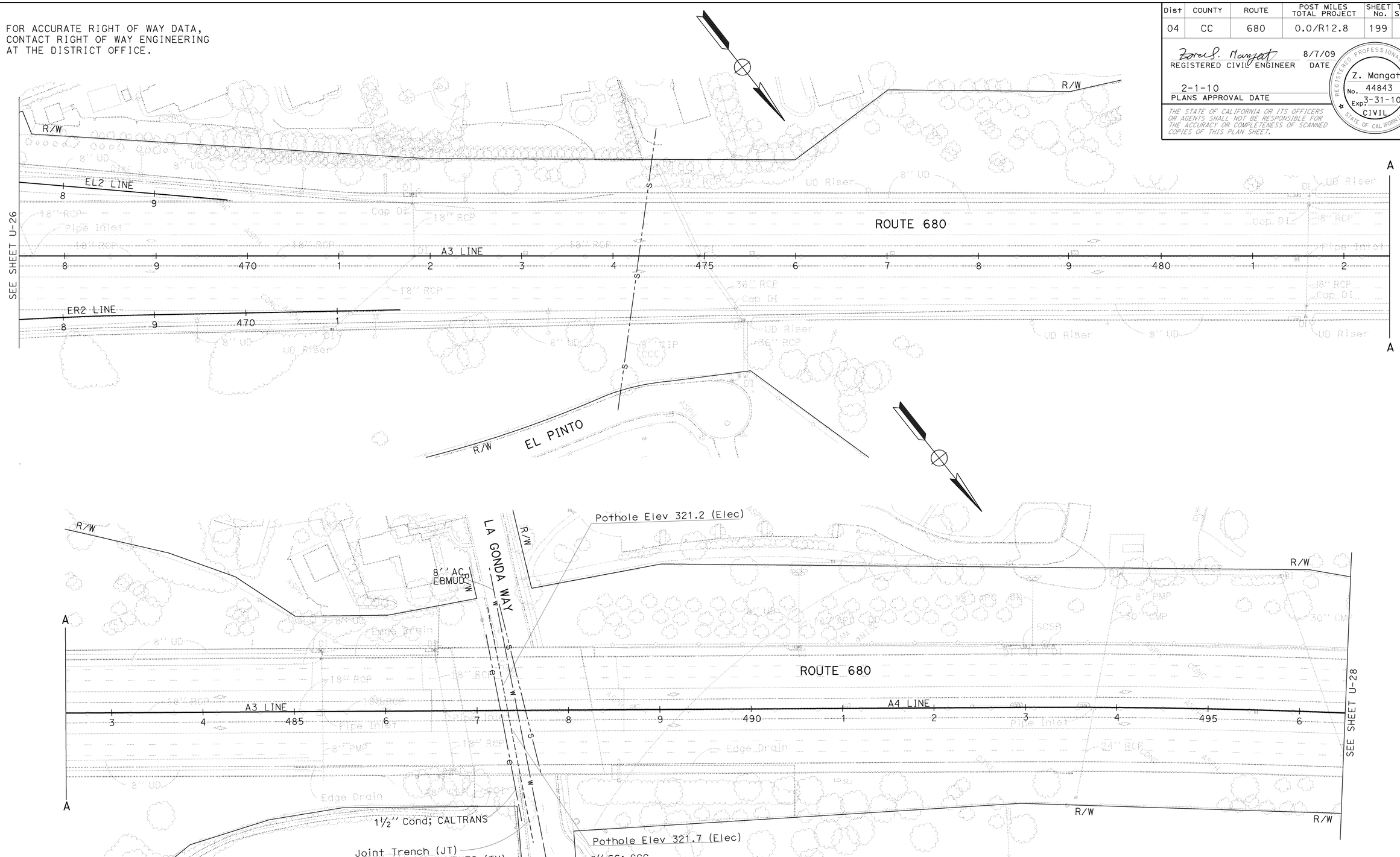

UTILITY PLAN

SCALE: 1" = 50'

FOR NOTES, ABBREVIATIONS &/OR LEGEND, SEE SHEET U-I

THIS PLAN ACCURATE FOR UTILITY INFOMATION ONLY

U-27

STATE OF CALIFORNIA - DEPARTMENT OF TRANSPORTATION
Caltrans
DESIGN

FUNCTIONAL SUPERVISOR: ARVIND K. GUPTA
CALCULATED-DESIGNED BY: RANJEET SINGH
CHECKED BY: ZORA S. MANGAT
REVISED BY: PL
DATE REVISED: 7/20/09

LAST REVISION 05-19-09
DATE PLOTTED => 04-FEB-2010
TIME PLOTTED => 11:29

BORDER LAST REVISED 4/11/2008
RELATIVE BORDER SCALE IS IN INCHES 0 1 2 3
USERNAME => trstrk
DGN FILE => 44470uka027.dgn
CU 04236
EA 4470U1

FOR ACCURATE RIGHT OF WAY DATA,
CONTACT RIGHT OF WAY ENGINEERING
AT THE DISTRICT OFFICE.

Dist	COUNTY	ROUTE	POST MILES TOTAL PROJECT	SHEET No.	TOTAL SHEETS
04	CC	680	0.0/R12.8	200	504

Zora S. Mangat 8/7/09
REGISTERED CIVIL ENGINEER DATE

2-1-10
PLANS APPROVAL DATE

REGISTERED PROFESSIONAL ENGINEER
Z. Mangat
No. 44843
Exp 3-31-10
CIVIL
STATE OF CALIFORNIA

THE STATE OF CALIFORNIA OR ITS OFFICERS OR AGENTS SHALL NOT BE RESPONSIBLE FOR THE ACCURACY OR COMPLETENESS OF SCANNED COPIES OF THIS PLAN SHEET.

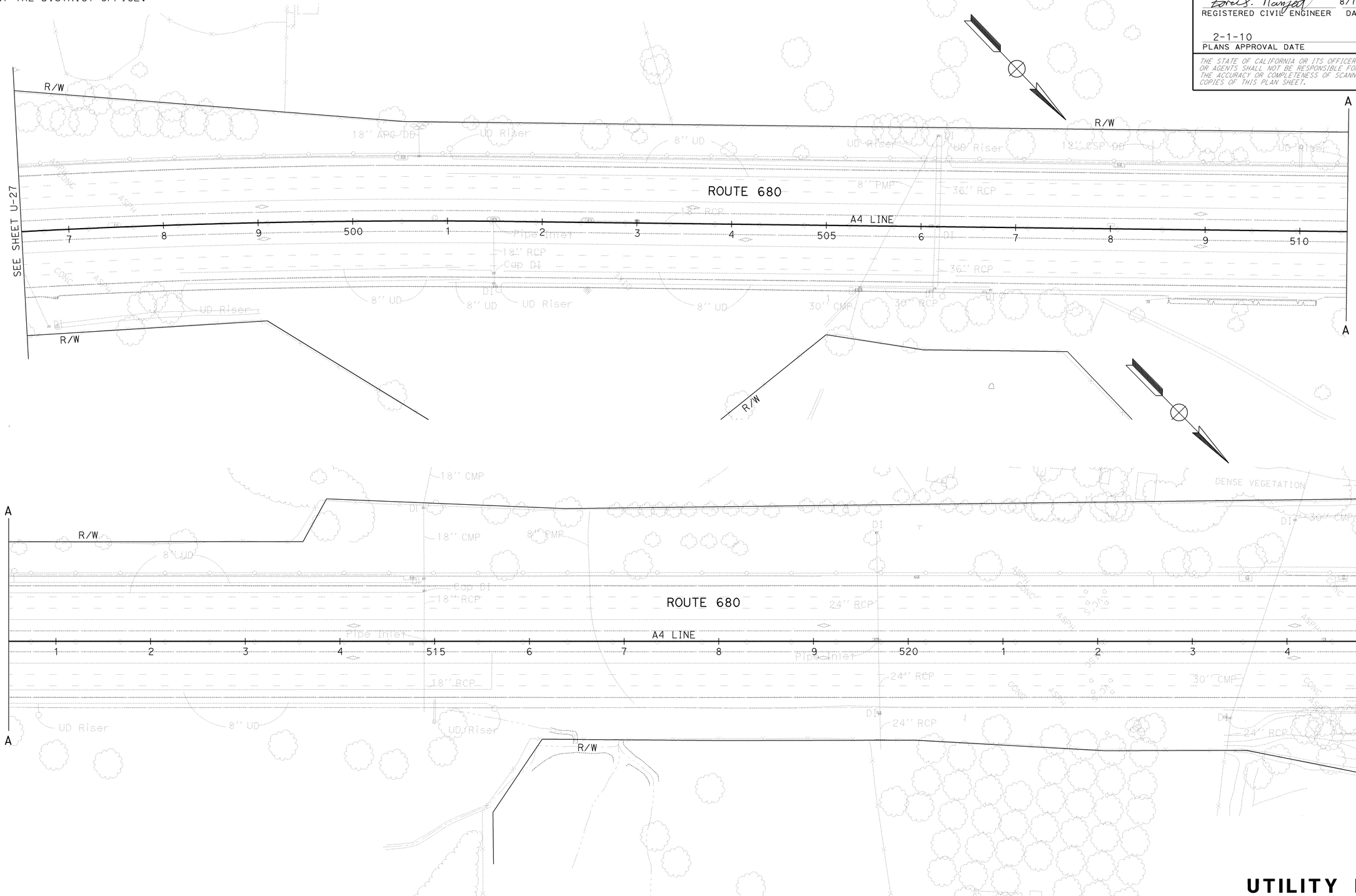

FOR NOTES, ABBREVIATIONS &/OR LEGEND, SEE SHEET U-1

THIS PLAN ACCURATE FOR UTILITY INFOMATION ONLY

UTILITY PLAN

SCALE: 1" = 50'

U-28

STATE OF CALIFORNIA - DEPARTMENT OF TRANSPORTATION
DESIGN
RANJEET SINGH
ZORA S. MANGAT
FUNCTIONAL SUPERVISOR
ARVIND K. GUPTA
CALCULATED-DESIGNED BY
CHECKED BY
REVISED BY
DATE REVISED
PL
7/20/09

LAST REVISION
DATE PLOTTED => 04-FEB-2010
TIME PLOTTED => 11:29
05-19-09

BORDER LAST REVISED 4/11/2008
RELATIVE BORDER SCALE IS IN INCHES 0 1 2 3
USERNAME => trstrk
DGN FILE => 44470uka028.dgn
CU 04236
EA 4470U1