ACSTP-43K8(004)E

Dist	COUNTY	ROUTE	POST MILES TOTAL PROJECT	SHEET No.	TOTAL SHEETS
04	Son	1	27.2	1	59

STATE OF CALIFORNIA

DEPARTMENT OF TRANSPORTATION

PROJECT PLANS FOR CONSTRUCTION ON

STATE HIGHWAY

IN SONOMA COUNTY
NEAR JENNER
AT 2.5 MILES NORTH OF MEYERS GRADE ROAD

TO BE SUPPLEMENTED BY STANDARD PLANS DATED MAY 2006

INDEX OF PLANS

SHEET No.	DESCRIPTION
1	TITLE AND LOCATION MAP
2	TYPICAL CROSS SECTIONS
3-4	LAYOUTS
5	PROFILES AND SUPERELEVATION DIAGRAMS
6-8	TEMPORARY WATER POLLUTION CONTROL PLAN AND QUANTITIES
9-11	DRAINAGE PROFILES AND DETAILS
12	CONSTRUCTION AREA SIGNS
13-17	TRAFFIC HANDLING PLAN, DETAILS, AND QUANTITIES
18-19	PAVEMENT DELINEATION PLAN AND QUANTITIES
20	SUMMARY OF QUANTITIES
21-25	ELECTRICAL PLANS
26-43	REVISED AND NEW STANDARD PLANS

STRUCTURE PLANS

44-59	RETAINING WALL

THE STANDARD PLANS LIST APPLICABLE TO THIS CONTRACT IS INCLUDED IN THE NOTICE TO BIDDERS AND SPECIAL PROVISIONS BOOK.

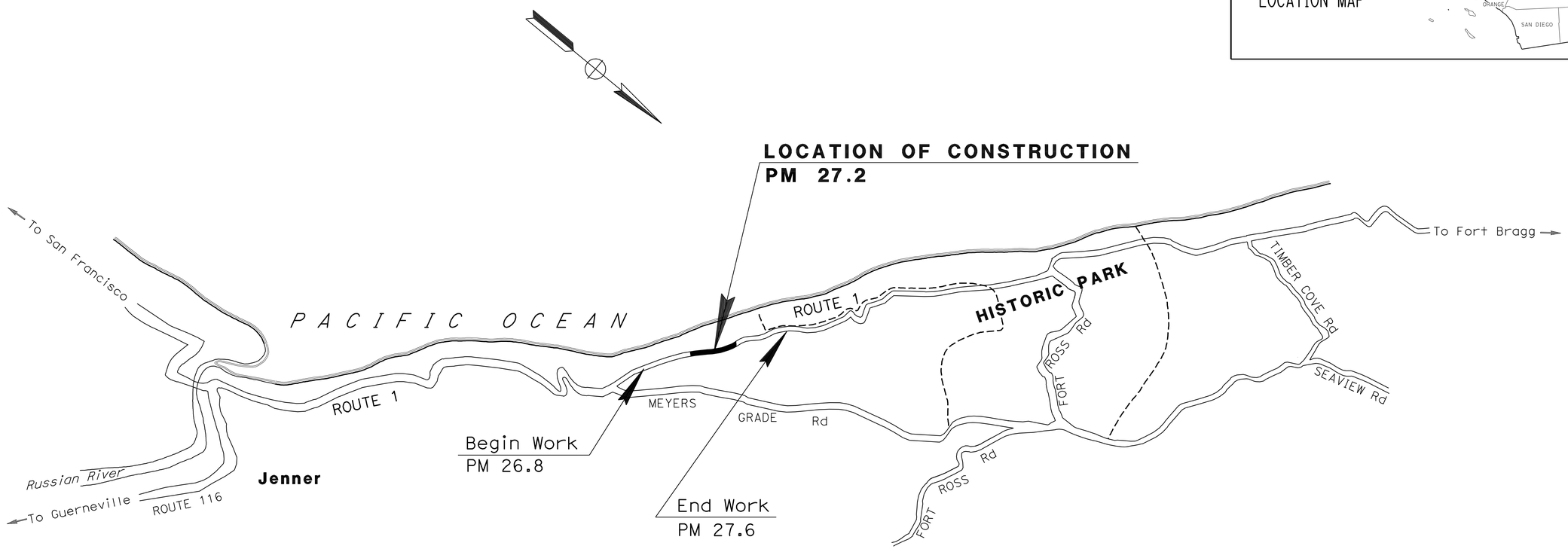

NO SCALE

PROJECT MANAGER: LILIAN ACORDA

DESIGN ENGINEER: GURBHAY BRAR

Udaya Y. Shankar 04-12-10
PROJECT ENGINEER DATE
REGISTERED CIVIL ENGINEER

July 12, 2010
PLANS APPROVAL DATE

REGISTERED PROFESSIONAL ENGINEER UDAYA Y. SHANKAR No. 71268 Exp. 12/31/11 CIVIL STATE OF CALIFORNIA

THE STATE OF CALIFORNIA OR ITS OFFICERS OR AGENTS SHALL NOT BE RESPONSIBLE FOR THE ACCURACY OR COMPLETENESS OF SCANNED COPIES OF THIS PLAN SHEET.

THE CONTRACTOR SHALL POSSESS THE CLASS (OR CLASSES) OF LICENSE AS SPECIFIED IN THE "NOTICE TO BIDDERS."

CONTRACT No.	04-3S7404
PROJECT ID	0400001028

LAST REVISION 05-05-10 DATE PLOTTED => 24-AUG-2010 TIME PLOTTED => 12:53

Dist	COUNTY	ROUTE	POST MILES TOTAL PROJECT	SHEET No.	TOTAL SHEETS
04	Son	1	27.2	2	59

REGISTERED CIVIL ENGINEER 04-12-10 DATE

7-12-10
PLANS APPROVAL DATE

REGISTERED PROFESSIONAL ENGINEER UDAYA Y. SHANKAR No. 71268 Exp. 12/31/11 CIVIL STATE OF CALIFORNIA

THE STATE OF CALIFORNIA OR ITS OFFICERS OR AGENTS SHALL NOT BE RESPONSIBLE FOR THE ACCURACY OR COMPLETENESS OF SCANNED COPIES OF THIS PLAN SHEET.

NOTES:

1. DIMENSIONS OF THE PAVEMENT STRUCTURES (STRUCTURAL SECTIONS) ARE SUBJECT TO TOLERANCES SPECIFIED IN THE STANDARD SPECIFICATIONS.
2. SUPERELEVATION AS SHOWN OR AS DIRECTED BY THE ENGINEER.
3. Exist MBGR BETWEEN STATION 0+79.00 AND STATION 5+22.00
4. TIE BACK WALL LIMITS ARE FROM STATION 0+65.89 TO STATION 2+68.63 AND FROM STATION 3+51.04 TO STATION 7+83.84.
5. MBGR (WOOD POST) LIMITS ARE FROM STATION 0+72.08 TO STATION 8+91.00.
6. FOR EXACT LOCATIONS OF DIKES, SEE SUMMARY OF QUANTIITES SHEET Q-1.
7. HMA (TYPE A) SHOULDER SECTION FROM Exist EP TO FL ENDS AT STATION 2+30.00.
8. FOR ACCURATE RIGHT OF WAY, CONTACT RIGHT OF WAY ENGINEERING AT THE DISTRICT OFFICE.

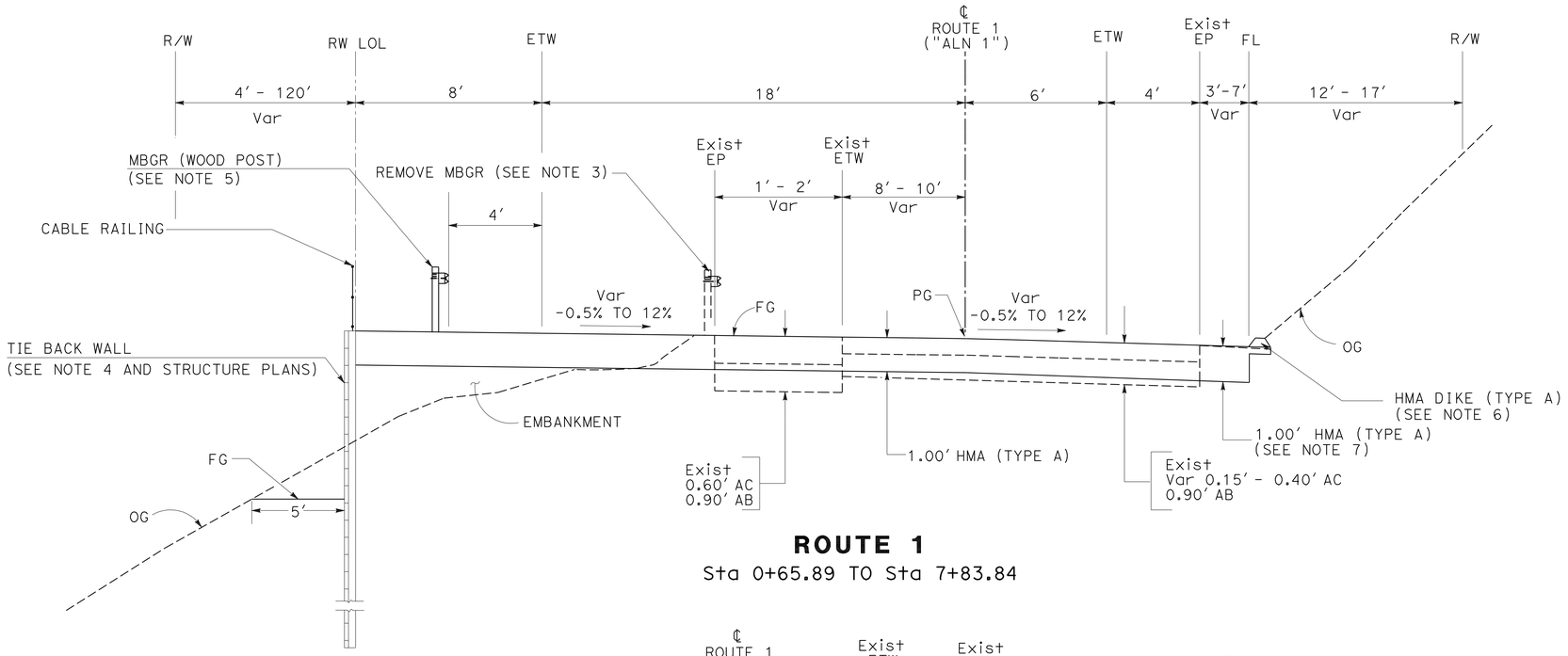

ROUTE 1

Sta 0+65.89 TO Sta 7+83.84

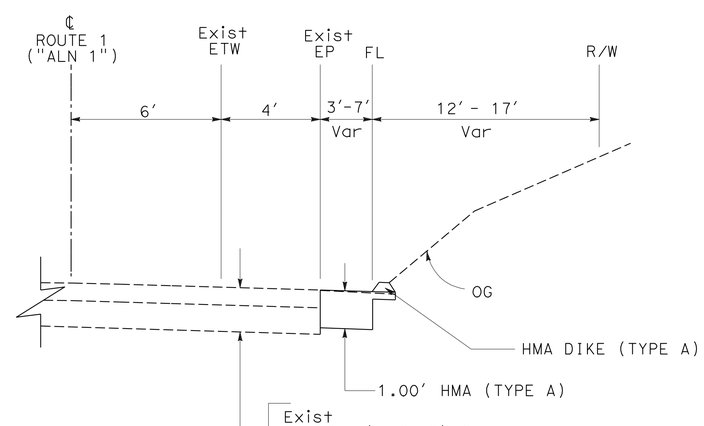

ROUTE 1

Sta 105+00.00 TO Sta 105+87.67
Sta 0+00.00 TO Sta 0+65.89

TYPICAL CROSS SECTIONS

NO SCALE

X-1

STATE OF CALIFORNIA - DEPARTMENT OF TRANSPORTATION
Caltrans
06-DESIGN

FUNCTIONAL SUPERVISOR: GURBHAY BRAR
CALCULATED-DESIGNED BY: DAVID VELAZCO
CHECKED BY: YEDIYUR SHANKAR
REVISED BY
DATE REVISED

LAST REVISION 05-18-10
DATE PLOTTED => 15-JUL-2010
TIME PLOTTED => 07:22

Dist	COUNTY	ROUTE	POST MILES TOTAL PROJECT	SHEET No.	TOTAL SHEETS
04	Son	1	27.2	3	59

REGISTERED CIVIL ENGINEER 04-12-10 DATE

7-12-10
PLANS APPROVAL DATE

REGISTERED PROFESSIONAL ENGINEER UDAYA Y. SHANKAR No. 71268 Exp. 12/31/11 CIVIL STATE OF CALIFORNIA

THE STATE OF CALIFORNIA OR ITS OFFICERS OR AGENTS SHALL NOT BE RESPONSIBLE FOR THE ACCURACY OR COMPLETENESS OF SCANNED COPIES OF THIS PLAN SHEET.

NOTE: FOR ACCURATE RIGHT OF WAY, CONTACT RIGHT OF WAY ENGINEERING AT THE DISTRICT OFFICE.

LEGEND

TEMPORARY CONSTRUCTION EASEMENT (TCE)

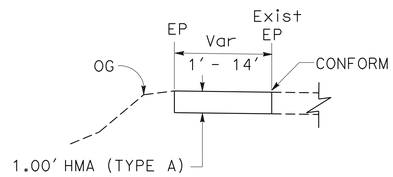

SECTION A-A
Sta 0+00.00 TO 0+65.89
NO SCALE

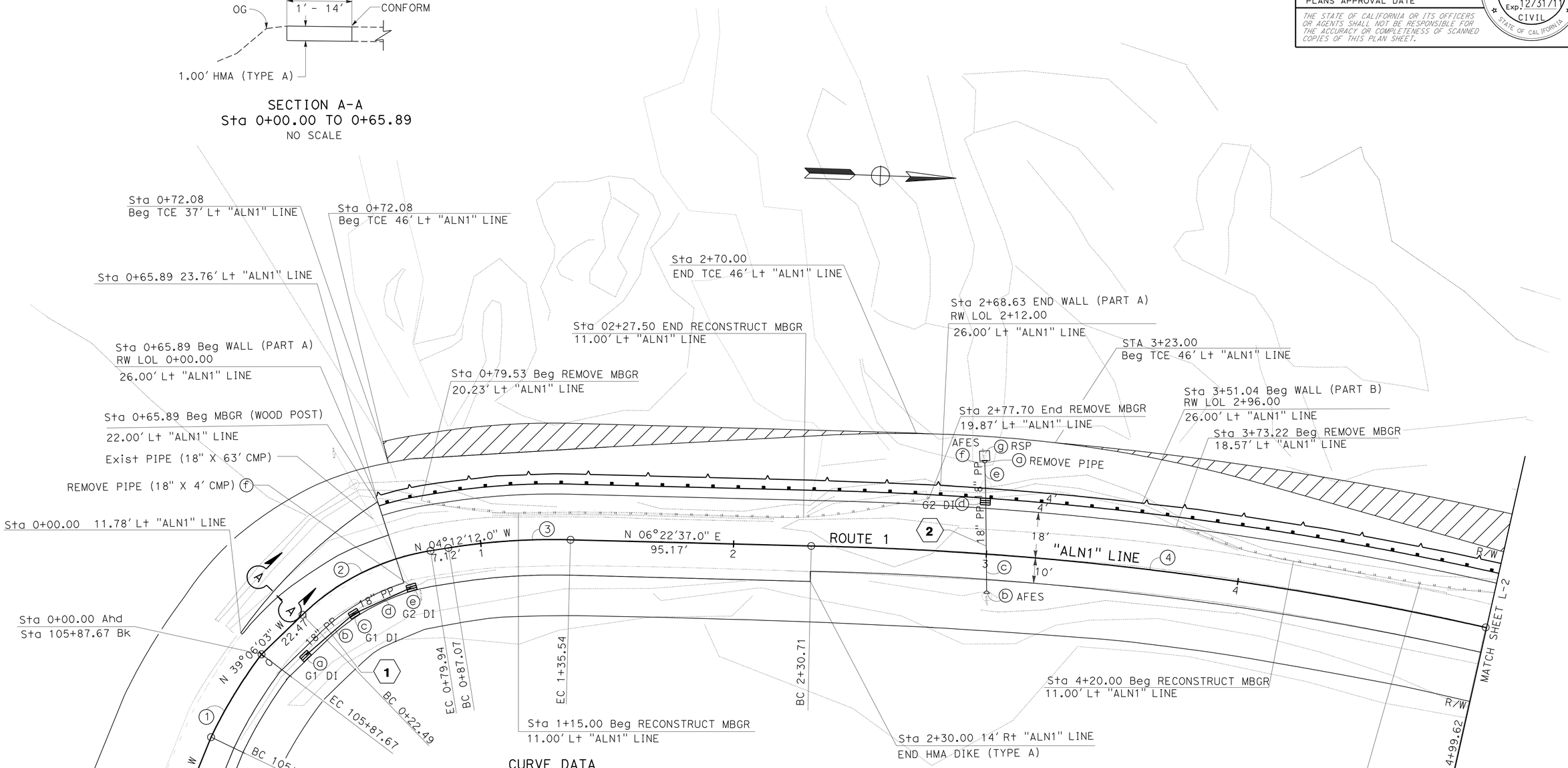

CURVE DATA

No.	R	Δ	T	L
1	192.97′	11°23′42"	19.25′	38.38′
2	94.32′	34°53′49"	29.65′	57.45′
3	262.47′	10°34′50"	24.30′	48.47′
4	1344.78′	11°27′26"	134.91′	268.91′

LAYOUT L-1

SCALE: 1" = 50′

STATE OF CALIFORNIA - DEPARTMENT OF TRANSPORTATION
Caltrans® 06-DESIGN

FUNCTIONAL SUPERVISOR: GURBHAY BRAR
CALCULATED-DESIGNED BY: DAVID VELAZCO
CHECKED BY: YEDIYUR SHANKAR
REVISED BY / DATE REVISED

LAST REVISION 05-11-10 | DATE PLOTTED => 15-JUL-2010 | TIME PLOTTED => 10:38

Dist	COUNTY	ROUTE	POST MILES TOTAL PROJECT	SHEET No.	TOTAL SHEETS
04	Son	1	27.2	4	59

REGISTERED CIVIL ENGINEER 04-12-10 DATE

7-12-10
PLANS APPROVAL DATE

REGISTERED PROFESSIONAL ENGINEER UDAYA Y. SHANKAR No. 71268 Exp. 12/31/11 CIVIL STATE OF CALIFORNIA

THE STATE OF CALIFORNIA OR ITS OFFICERS OR AGENTS SHALL NOT BE RESPONSIBLE FOR THE ACCURACY OR COMPLETENESS OF SCANNED COPIES OF THIS PLAN SHEET.

NOTE: FOR ACCURATE RIGHT OF WAY, CONTACT RIGHT OF WAY ENGINEERING AT THE DISTRICT OFFICE.

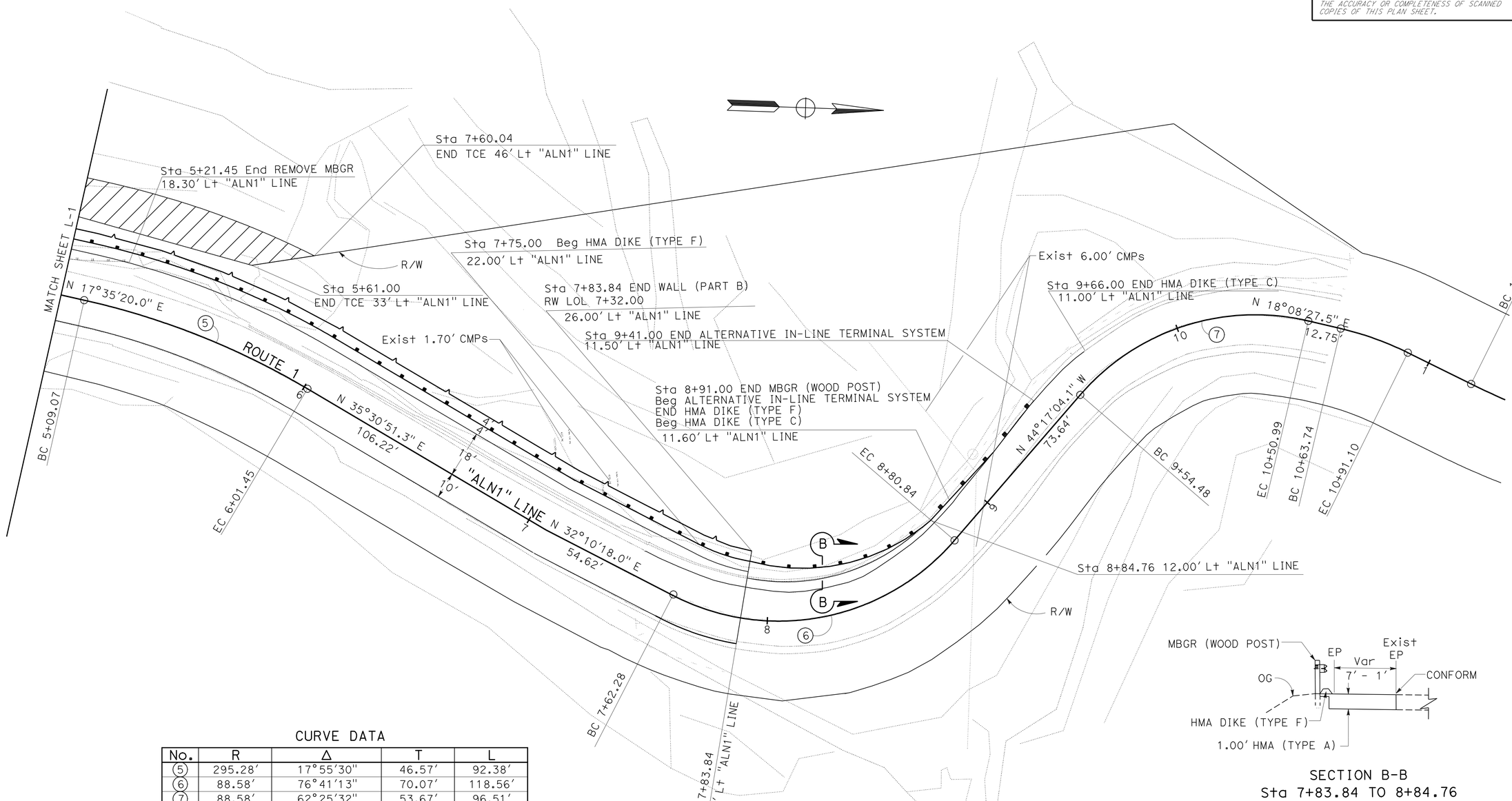

SECTION B-B
Sta 7+83.84 TO 8+84.76
NO SCALE

CURVE DATA

No.	R	Δ	T	L
5	295.28'	17°55'30"	46.57'	92.38'
6	88.58'	76°41'13"	70.07'	118.56'
7	88.58'	62°25'32"	53.67'	96.51'

LAYOUT
SCALE: 1" = 50'
L-2

STATE OF CALIFORNIA - DEPARTMENT OF TRANSPORTATION
Caltrans
06-DESIGN

FUNCTIONAL SUPERVISOR: GURBHAY BRAR
CALCULATED-DESIGNED BY: DAVID VELAZCO
CHECKED BY: YEDIYUR SHANKAR
REVISED BY
DATE REVISED

LAST REVISION 06-16-10
DATE PLOTTED => 15-JUL-2010
TIME PLOTTED => 07:22

Dist	COUNTY	ROUTE	POST MILES TOTAL PROJECT	SHEET No.	TOTAL SHEETS
04	Son	1	27.2	5	59

REGISTERED CIVIL ENGINEER 04-12-10 DATE

7-12-10
PLANS APPROVAL DATE

REGISTERED PROFESSIONAL ENGINEER UDAYA Y. SHANKAR No. 71268 Exp. 12/31/11 CIVIL STATE OF CALIFORNIA

THE STATE OF CALIFORNIA OR ITS OFFICERS OR AGENTS SHALL NOT BE RESPONSIBLE FOR THE ACCURACY OR COMPLETENESS OF SCANNED COPIES OF THIS PLAN SHEET.

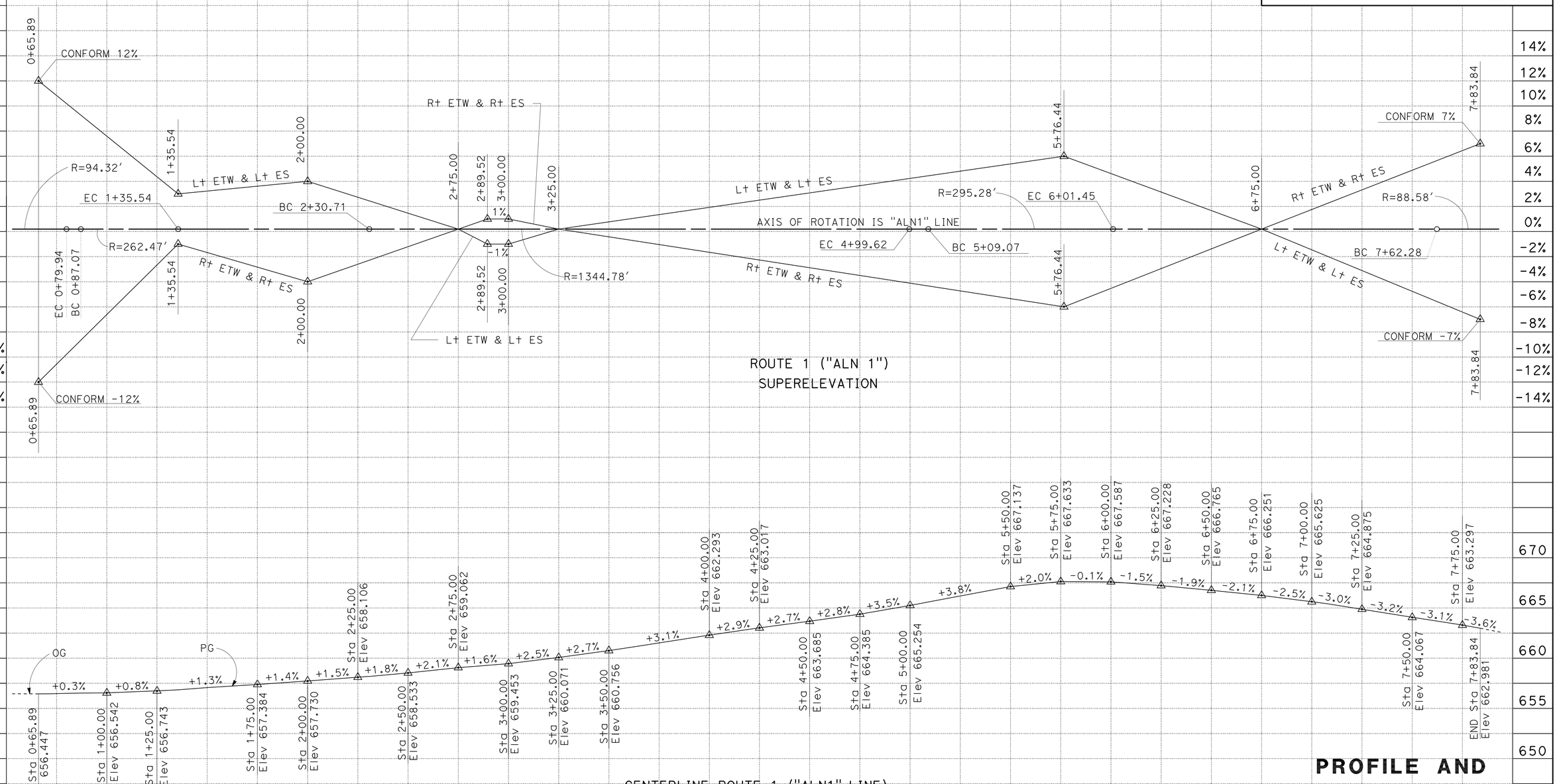

PROFILE AND SUPERELEVATION DIAGRAM

SCALE: Horiz 1" = 25'
Vert 1" = 5'

PS-1

REVISED BY	
DATE REVISED	
CALCULATED-DESIGNED BY	DAVID VELAZCO
CHECKED BY	YEDIYUR SHANKAR
FUNCTIONAL SUPERVISOR	GURBHAY BRAR

STATE OF CALIFORNIA - DEPARTMENT OF TRANSPORTATION
Caltrans
06-DESIGN

LAST REVISION 04-27-10
DATE PLOTTED => 15-JUL-2010
TIME PLOTTED => 07:22

Dist	COUNTY	ROUTE	POST MILES TOTAL PROJECT	SHEET No.	TOTAL SHEETS
04	Son	1	27.2	6	59

Alex McDonald
LICENSED LANDSCAPE ARCHITECT

7-12-10
PLANS APPROVAL DATE

LICENSED LANDSCAPE ARCHITECT
ALEXANDER K. McDONALD No. 5342
Signature
08-31-10
Renewal Date
05-11-10
Date
STATE OF CALIFORNIA

THE STATE OF CALIFORNIA OR ITS OFFICERS OR AGENTS SHALL NOT BE RESPONSIBLE FOR THE ACCURACY OR COMPLETENESS OF SCANNED COPIES OF THIS PLAN SHEET.

NOTES:

1. FOR ACCURATE RIGHT OF WAY DATA, CONTACT RIGHT OF WAY ENGINEERING AT THE DISTRICT OFFICE.
2. EROSION CONTROL LOCATIONS ARE DIAGRAMMATIC ONLY.
3. NO CONSTRUCTION ACTIVITY SHALL OCCUR BEYOND TEMPORARY REINFORCED SILT FENCE.

LEGEND

FIBER ROLLS (TYPE 2)

EROSION CONTROL (TYPE 1)

EROSION CONTROL (COMPOST BLANKET)
ROLLED EROSION CONTROL PRODUCT (NETTING)
EROSION CONTROL (HYDROSEED)

—xx— TRSF —xx— TEMPORARY REINFORCED SILT FENCE

-·-·-·- TCE -·-·-·- TEMPORARY CONSTRUCTION EASEMENT

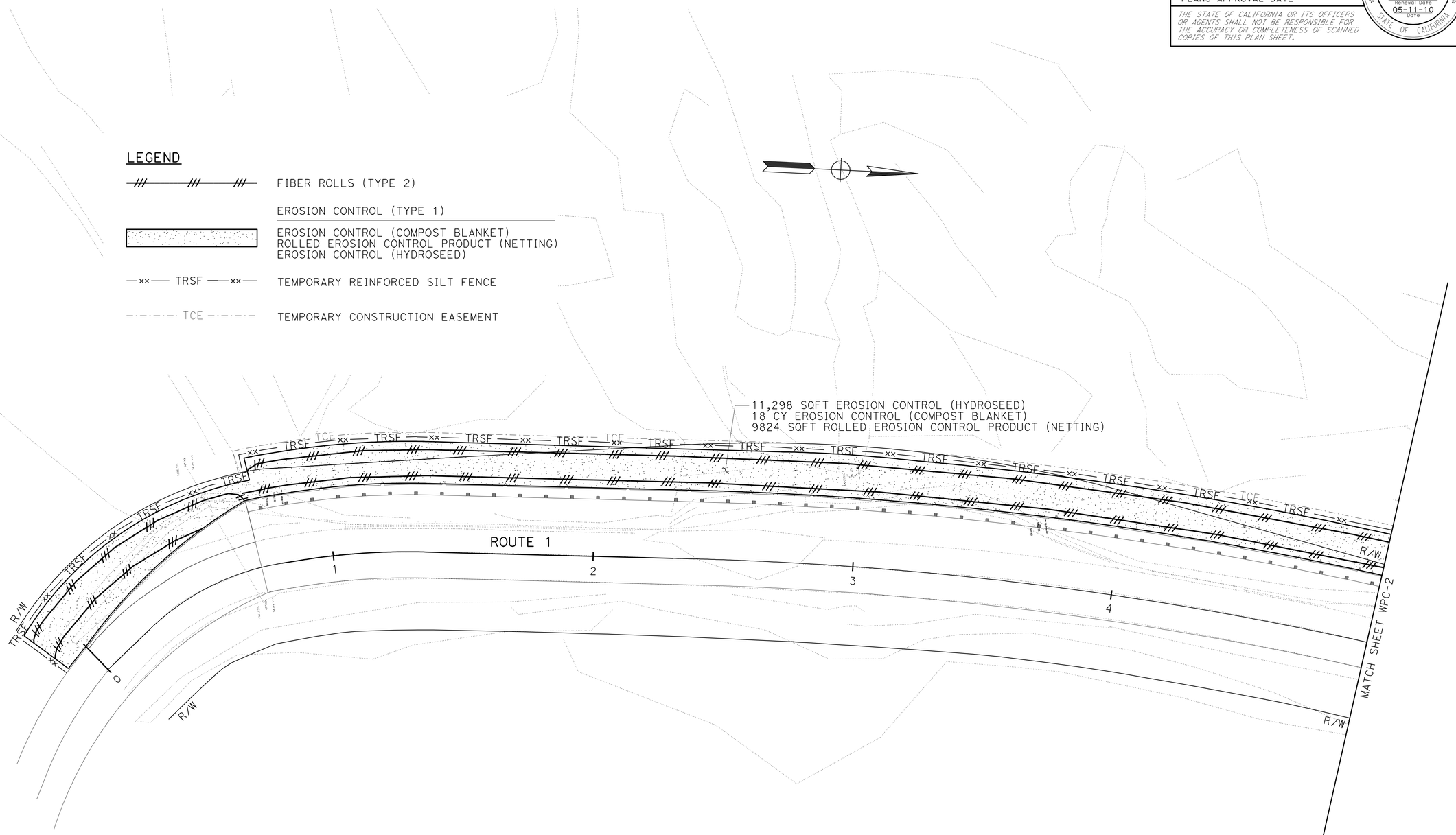

THIS PLAN ACCURATE FOR TEMPORARY WATER POLLUTION AND EROSION CONTROL WORK ONLY

TEMPORARY WATER POLLUTION AND EROSION CONTROL PLAN

SCALE: 1" = 20'

WPC-1

STATE OF CALIFORNIA - DEPARTMENT OF TRANSPORTATION
Caltrans®
WATER QUALITY

SENIOR LANDSCAPE ARCHITECT: DAVID W. YAM
CALCULATED-DESIGNED BY: Alex McDonald
CHECKED BY: Jennifer Egawa
REVISED BY
DATE REVISED

LAST REVISION 05-05-10
DATE PLOTTED => 15-JUL-2010
TIME PLOTTED => 07:22

Dist	COUNTY	ROUTE	POST MILES TOTAL PROJECT	SHEET No.	TOTAL SHEETS
04	Son	1	27.2	7	59

Alex McDonald
LICENSED LANDSCAPE ARCHITECT

7-12-10
PLANS APPROVAL DATE

LICENSED LANDSCAPE ARCHITECT
ALEXANDER K. MCDONALD No. 5292
Alex McDonald
Signature
08-31-10
Renewal Date
05-11-10
Date
STATE OF CALIFORNIA

THE STATE OF CALIFORNIA OR ITS OFFICERS OR AGENTS SHALL NOT BE RESPONSIBLE FOR THE ACCURACY OR COMPLETENESS OF SCANNED COPIES OF THIS PLAN SHEET.

NOTE:

FOR ACCURATE RIGHT OF WAY DATA, CONTACT RIGHT OF WAY ENGINEERING AT THE DISTRICT OFFICE.

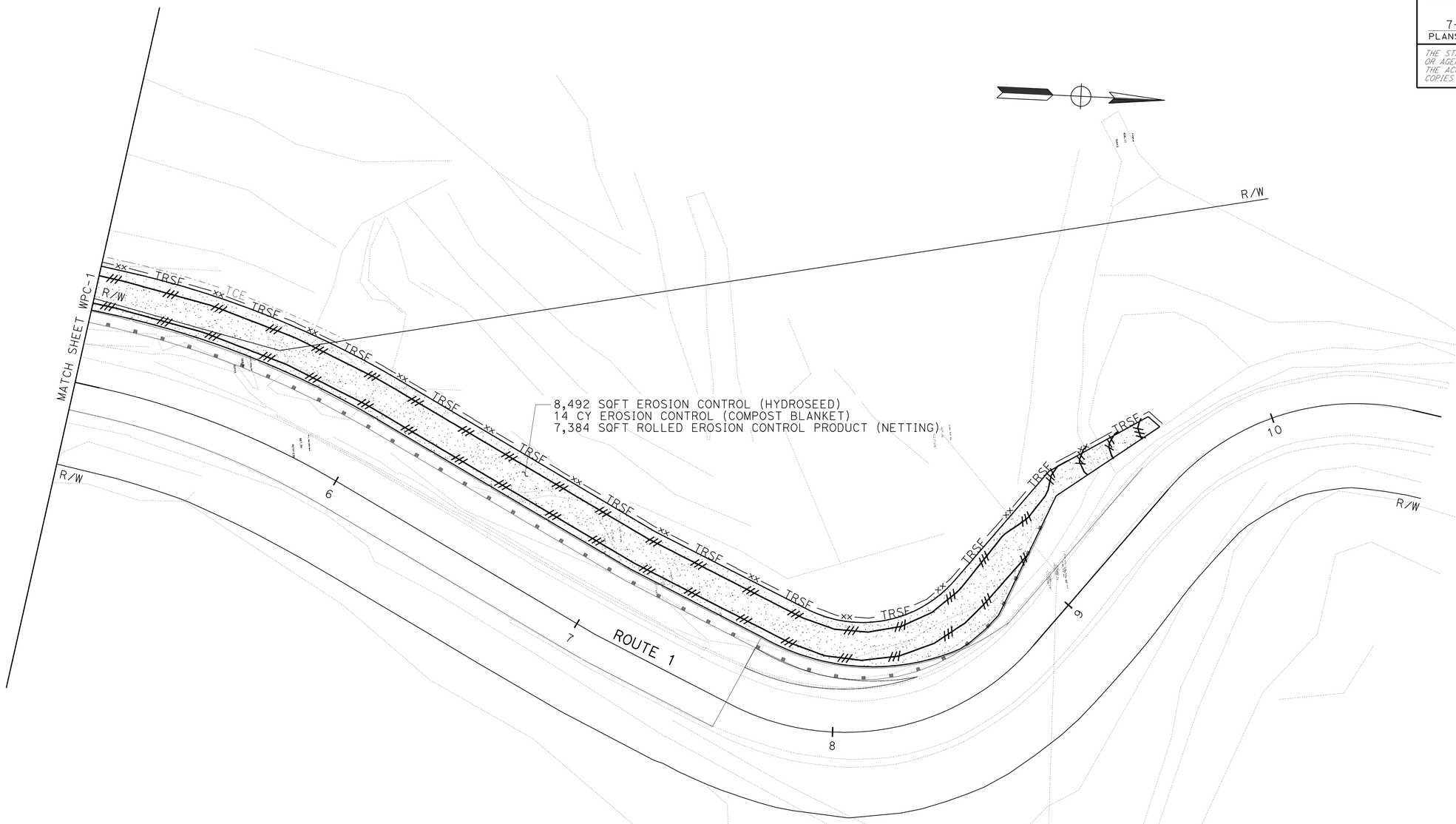

THIS PLAN ACCURATE FOR TEMPORARY WATER POLLUTION AND EROSION CONTROL WORK ONLY

TEMPORARY WATER POLLUTION AND EROSION CONTROL PLAN

SCALE: 1" = 20'

WPC-2

STATE OF CALIFORNIA - DEPARTMENT OF TRANSPORTATION
Caltrans
WATER QUALITY

SENIOR LANDSCAPE ARCHITECT: DAVID W. YAM

CALCULATED-DESIGNED BY: Alex McDonald
CHECKED BY: Jennifer Egawa

REVISED BY
DATE REVISED

LAST REVISION 05-05-10
DATE PLOTTED => 15-JUL-2010
TIME PLOTTED => 07:23

Dist	COUNTY	ROUTE	POST MILES TOTAL PROJECT	SHEET No.	TOTAL SHEETS
04	Son	1	27.2	8	59

Alex McDonald
LICENSED LANDSCAPE ARCHITECT

7-12-10
PLANS APPROVAL DATE

LICENSED LANDSCAPE ARCHITECT
ALEXANDER K. MCDONALD No. 5382
Alex McDonald
Signature
08-31-10
Renewal Date
05-11-10
Date
STATE OF CALIFORNIA

THE STATE OF CALIFORNIA OR ITS OFFICERS OR AGENTS SHALL NOT BE RESPONSIBLE FOR THE ACCURACY OR COMPLETENESS OF SCANNED COPIES OF THIS PLAN SHEET.

TEMPORARY WATER POLLUTION CONTROL QUANTITIES

Sheet No.	TEMPORARY REINFORCED SILT FENCE	TEMPORARY COVER	TEMPORARY CHECK DAM	TEMPORARY DRAINAGE INLET PROTECTION
	LF	SQYD	LF	EA
WPC-1	588	720	27	-
WPC-2	438	540	18	1
TOTAL	1026	1260	45	1

EROSION CONTROL QUANTITIES

EROSION CONTROL (TYPE 1)	Sheet No.	EROSION CONTROL (COMPOST BLANKET)	ROLLED EROSION CONTROL PRODUCT (NETTING)	EROSION CONTROL (HYDROSEED)	SEED (N)	FIBER (N)	ORGANIC FERTILIZER (N)	TACKIFIER (N)	FIBER ROLLS
		CY	SQFT	SQFT	lbs	lbs	lbs	lbs	LF
	WPC-1	18	9824	11,298	19	156	312	39	1068
	WPC-2	14	7384	8492	15	117	234	30	813
	TOTAL	32	17,208	19,790	34	273	546	69	1881

(N) NOT A SEPARATE PAY ITEM, FOR INFORMATION ONLY.

TEMPORARY WATER POLLUTION AND EROSION CONTROL QUANTITIES

WPCQ-1

REVISED BY | DATE REVISED
Alex McDonald | Jennifer Egawa
CALCULATED-DESIGNED BY | CHECKED BY
SENIOR LANDSCAPE ARCHITECT
DAVID W. YAM
STATE OF CALIFORNIA - DEPARTMENT OF TRANSPORTATION
Caltrans®
WATER QUALITY

LAST REVISION 05-05-10
DATE PLOTTED => 15-JUL-2010
TIME PLOTTED => 07:23

Dist	COUNTY	ROUTE	POST MILES TOTAL PROJECT	SHEET No.	TOTAL SHEETS
04	Son	1	27.2	9	59

REGISTERED CIVIL ENGINEER 04-12-10 DATE

7-12-10
PLANS APPROVAL DATE

REGISTERED PROFESSIONAL ENGINEER
UDAYA Y. SHANKAR
No. 71268
Exp 12/31/11
CIVIL
STATE OF CALIFORNIA

THE STATE OF CALIFORNIA OR ITS OFFICERS OR AGENTS SHALL NOT BE RESPONSIBLE FOR THE ACCURACY OR COMPLETENESS OF SCANNED COPIES OF THIS PLAN SHEET.

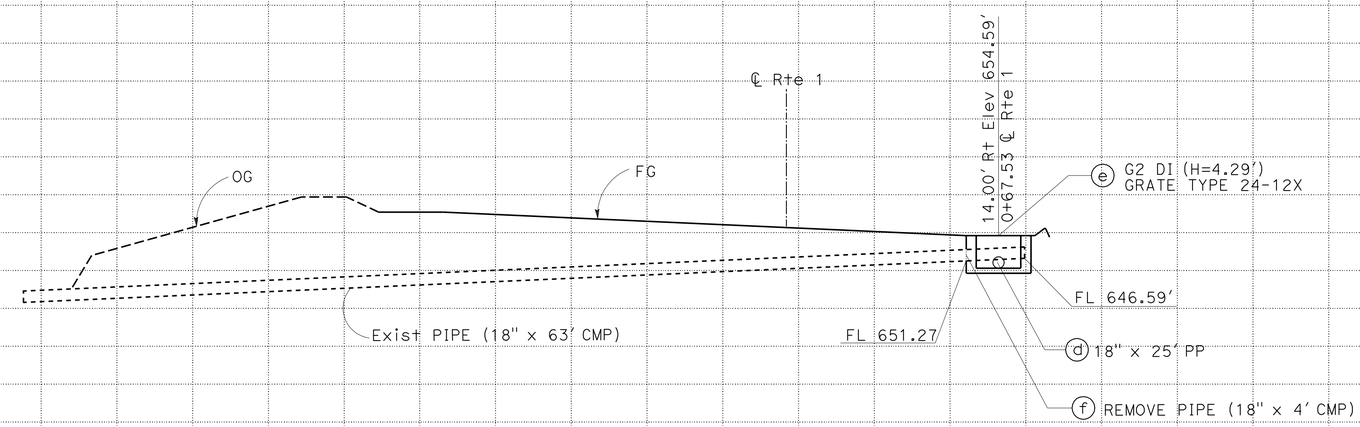

DRAINAGE SYSTEM No. 1
ROUTE 1

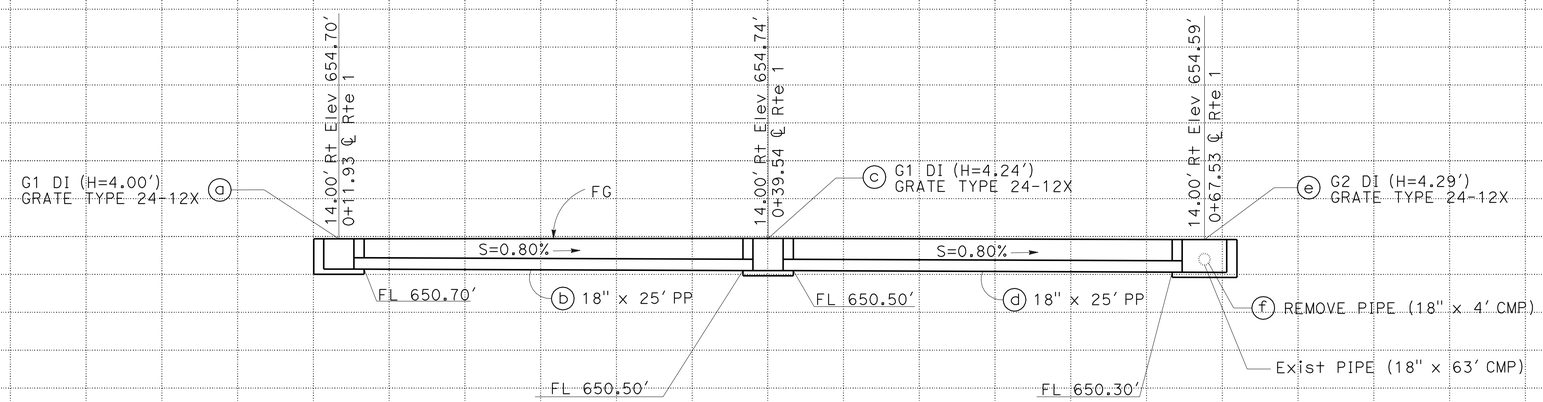

DRAINAGE SYSTEM No. 1
ROUTE 1

DRAINAGE PROFILE

SCALE: Horiz 1" = 5'
Vert 1" = 10'

DP-1

Station.	
CY	Exc
	Emb

REVISED BY | DATE REVISED
DAVID VELAZCO | YEDIYUR SHANKAR
CALCULATED-DESIGNED BY | CHECKED BY
FUNCTIONAL SUPERVISOR: GURBHAY BRAR

STATE OF CALIFORNIA - DEPARTMENT OF TRANSPORTATION
Caltrans
06-DESIGN

LAST REVISION 05-11-10 | DATE PLOTTED => 15-JUL-2010 | TIME PLOTTED => 07:23

Dist	COUNTY	ROUTE	POST MILES TOTAL PROJECT	SHEET No.	TOTAL SHEETS
04	Son	1	27.2	10	59

REGISTERED CIVIL ENGINEER 04-12-10 DATE

7-12-10
PLANS APPROVAL DATE

REGISTERED PROFESSIONAL ENGINEER
UDAYA Y. SHANKAR
No. 71268
Exp. 12/31/11
CIVIL
STATE OF CALIFORNIA

THE STATE OF CALIFORNIA OR ITS OFFICERS OR AGENTS SHALL NOT BE RESPONSIBLE FOR THE ACCURACY OR COMPLETENESS OF SCANNED COPIES OF THIS PLAN SHEET.

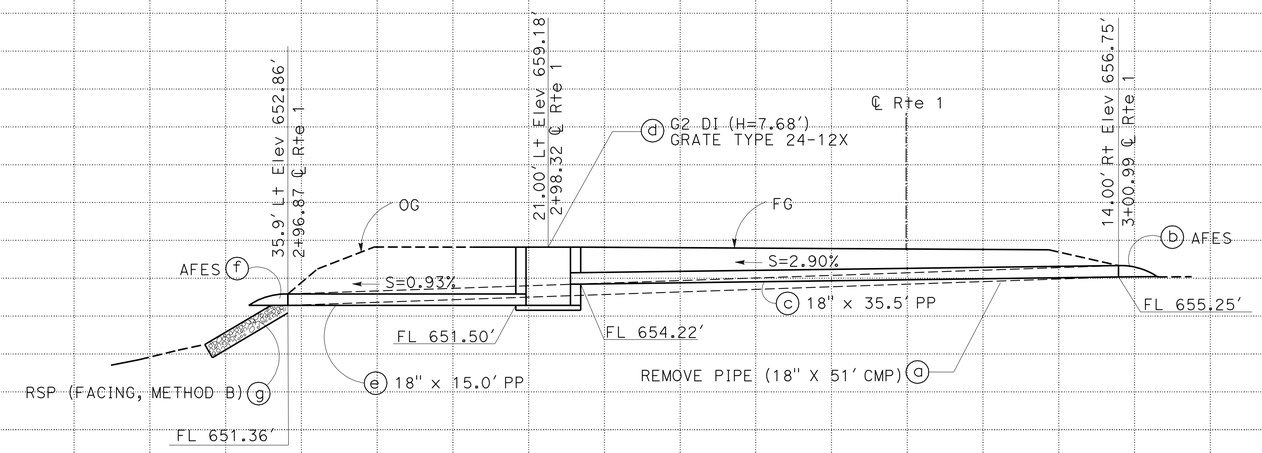

DRAINAGE SYSTEM No. 2

ROUTE 1

DRAINAGE PROFILE

SCALE: Horiz 1" = 5'
Vert 1" = 10'

DP-2

Station.	
CY Exc	
CY Emb	

STATE OF CALIFORNIA - DEPARTMENT OF TRANSPORTATION
Caltrans®
06-DESIGN

FUNCTIONAL SUPERVISOR: GURBHAY BRAR
CALCULATED-DESIGNED BY: DAVID VELAZCO
CHECKED BY: YEDIYUR SHANKAR
REVISED BY
DATE REVISED

LAST REVISION 05-11-10
DATE PLOTTED => 15-JUL-2010
TIME PLOTTED => 07:23

Dist	COUNTY	ROUTE	POST MILES TOTAL PROJECT	SHEET No.	TOTAL SHEETS
04	Son	1	27.2	11	59

REGISTERED CIVIL ENGINEER 04-12-10 DATE

7-12-10
PLANS APPROVAL DATE

REGISTERED PROFESSIONAL ENGINEER
UDAYA Y. SHANKAR
No. 71268
Exp. 12/31/11
CIVIL
STATE OF CALIFORNIA

THE STATE OF CALIFORNIA OR ITS OFFICERS OR AGENTS SHALL NOT BE RESPONSIBLE FOR THE ACCURACY OR COMPLETENESS OF SCANNED COPIES OF THIS PLAN SHEET.

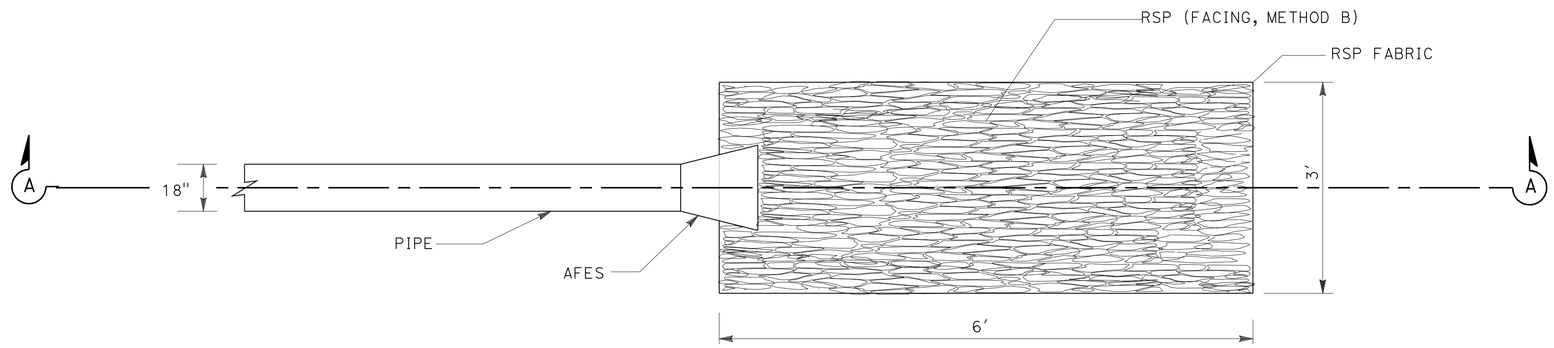

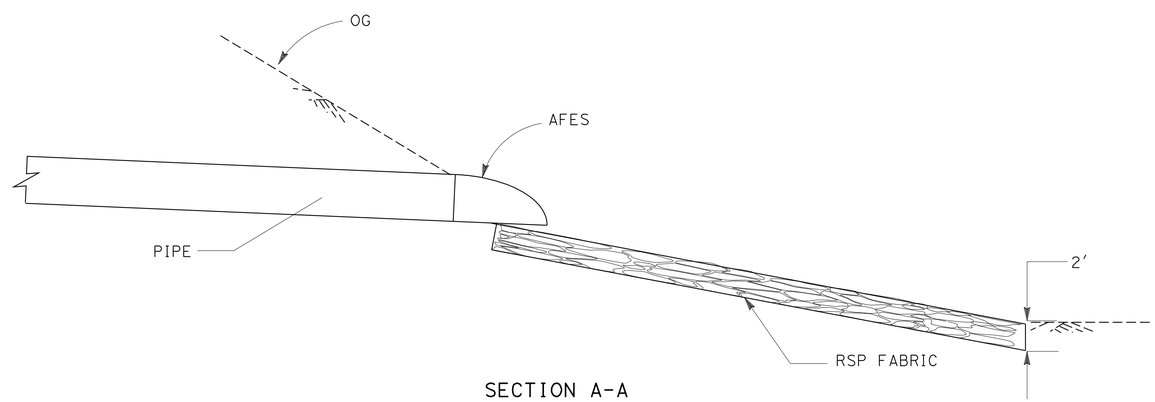

SECTION A-A

ROCK SLOPE PROTECTION

DRAINAGE DETAILS

NO SCALE

DD-1

STATE OF CALIFORNIA - DEPARTMENT OF TRANSPORTATION
Caltrans
06-DESIGN

FUNCTIONAL SUPERVISOR: GURBHAY BRAR
CALCULATED-DESIGNED BY: DAVID VELAZCO
CHECKED BY: YEDIYUR SHANKAR
REVISED BY
DATE REVISED

LAST REVISION 04-07-10
DATE PLOTTED => 15-JUL-2010
TIME PLOTTED => 07:23

Dist	COUNTY	ROUTE	POST MILES TOTAL PROJECT	SHEET No.	TOTAL SHEETS
04	Son	1	27.2	12	59

REGISTERED CIVIL ENGINEER 05-10-10 DATE

7-12-10
PLANS APPROVAL DATE

REGISTERED PROFESSIONAL ENGINEER MAZIN H. AL-ALI No. 65523 Exp 9/30/11 CIVIL STATE OF CALIFORNIA

THE STATE OF CALIFORNIA OR ITS OFFICERS OR AGENTS SHALL NOT BE RESPONSIBLE FOR THE ACCURACY OR COMPLETENESS OF SCANNED COPIES OF THIS PLAN SHEET.

NOTES:

1. EXACT SIGN LOCATIONS TO BE DETERMINED BY THE ENGINEER.
2. FOR ADDITIONAL CONSTRUCTION AREA SIGNS SEE TRAFFIC HANDLING PLANS.

STATIONARY MOUNTED CONSTRUCTION AREA SIGNS

SIGN No.	SIGN CODE	PANEL SIZE	SIGN MESSAGE	No. OF POST AND SIZE	EACH
A	W20-1	36" x 36"	ROAD WORK AHEAD	1-4" x 6"	2
B	G20-2	36" x 18"	END ROAD WORK	1-4" x 6"	2

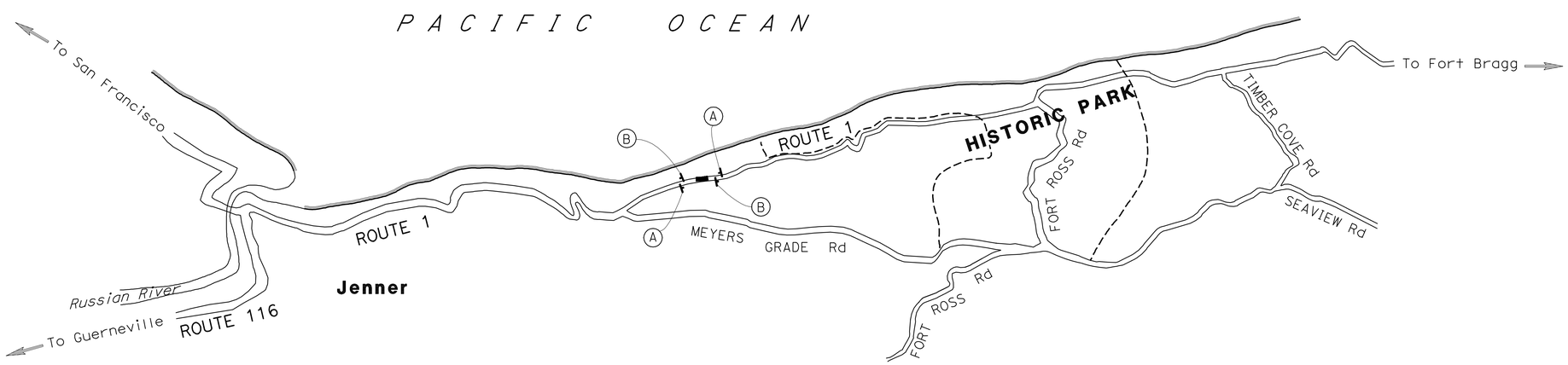

CONSTRUCTION AREA SIGNS

THIS PLAN ACCURATE FOR CONSTRUCTION AREA SIGN WORK ONLY.

NO SCALE

CS-1

STATE OF CALIFORNIA - DEPARTMENT OF TRANSPORTATION
Caltrans® 06-TRAFFIC DESIGN

FUNCTIONAL SUPERVISOR: MOHAMMED QATAMI
CALCULATED-DESIGNED BY: HASEEB YOUSAF
CHECKED BY: MAZIN AL-ALI
REVISED BY
DATE REVISED

LAST REVISION 05-05-10
DATE PLOTTED => 15-JUL-2010
TIME PLOTTED => 08:26

Dist	COUNTY	ROUTE	POST MILES TOTAL PROJECT	SHEET No.	TOTAL SHEETS
04	Son	1	27.2	13	59

REGISTERED CIVIL ENGINEER DATE 05-10-10

7-12-10
PLANS APPROVAL DATE

REGISTERED PROFESSIONAL ENGINEER MAZIN H. AL-ALI No. 65523 Exp. 9/30/11 CIVIL STATE OF CALIFORNIA

THE STATE OF CALIFORNIA OR ITS OFFICERS OR AGENTS SHALL NOT BE RESPONSIBLE FOR THE ACCURACY OR COMPLETENESS OF ELECTRONIC COPIES OF THIS PLAN SHEET.

LEGEND:

- ROADSIDE SIGN ONE-POST
- DIRECTION OF TRAFFIC
- Temp RAILING (TYPE K)
- CHANNELIZER (SURFACED MOUNTED)
- CONSTRUCTION AREA
- (XX) TEMPORARY TRAFFIC STRIPE (PAINT) DETAIL NUMBER

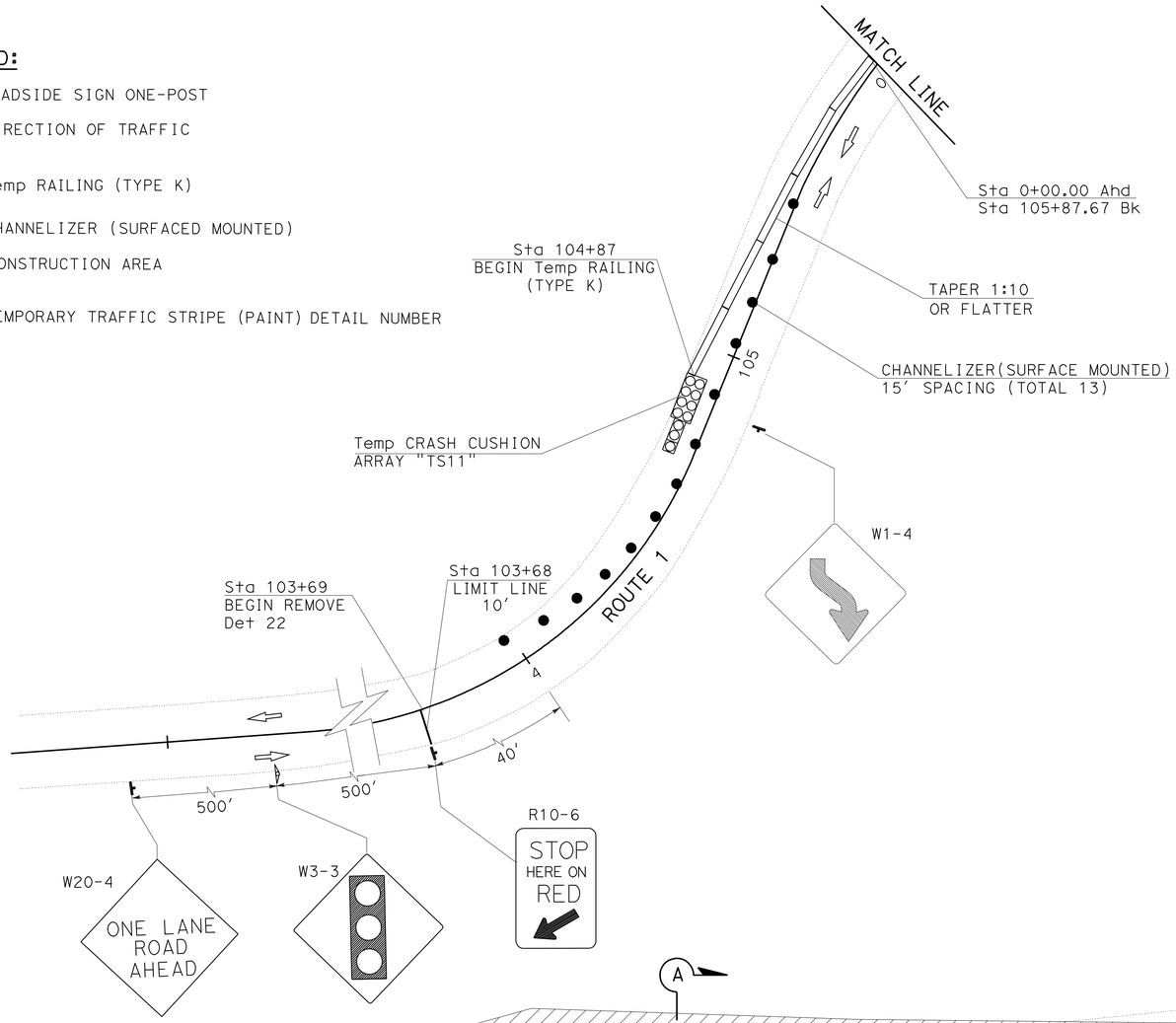

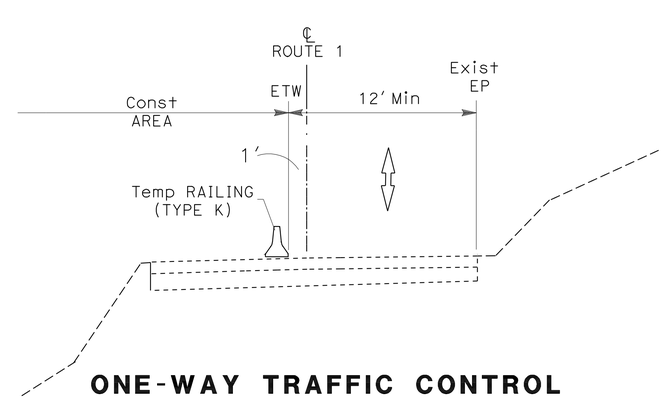

ONE-WAY TRAFFIC CONTROL

SECTION A-A
NO SCALE

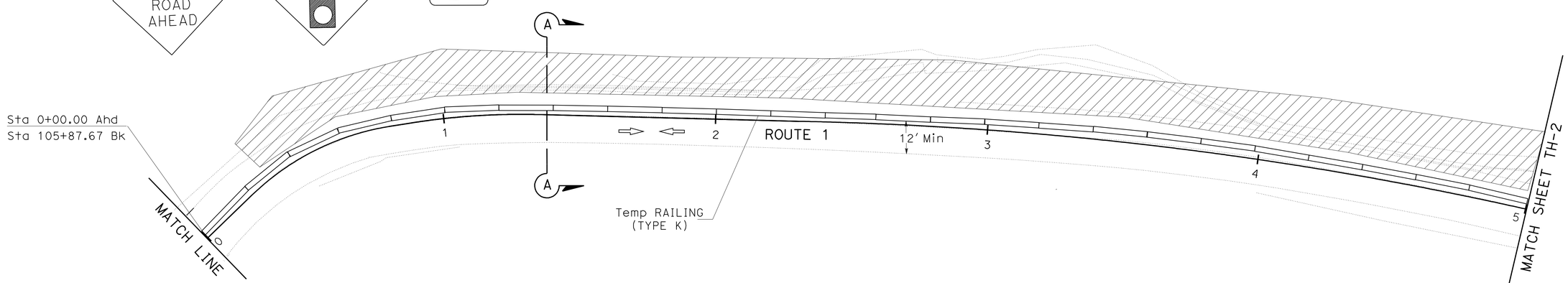

TRAFFIC HANDLING PLAN
(STAGE 1)

TH-1

THIS PLAN ACCURATE FOR TRAFFIC HANDLING WORK ONLY.

SCALE: 1" = 20′

STATE OF CALIFORNIA - DEPARTMENT OF TRANSPORTATION
Caltrans **06-TRAFFIC DESIGN**

FUNCTIONAL SUPERVISOR: MOHAMMED QATAMI
CALCULATED-DESIGNED BY: HASEEB YOUSAF
CHECKED BY: MAZIN AL-ALI
REVISED BY
DATE REVISED

LAST REVISION 05-05-10
DATE PLOTTED => 15-JUL-2010
TIME PLOTTED => 08:26

Dist	COUNTY	ROUTE	POST MILES TOTAL PROJECT	SHEET No.	TOTAL SHEETS
04	Son	1	27.2	14	59

REGISTERED CIVIL ENGINEER DATE 05-10-10

PLANS APPROVAL DATE 7-12-10

REGISTERED PROFESSIONAL ENGINEER MAZIN H. AL-ALI No. 65523 Exp. 9/30/11 CIVIL STATE OF CALIFORNIA

THE STATE OF CALIFORNIA OR ITS OFFICERS OR AGENTS SHALL NOT BE RESPONSIBLE FOR THE ACCURACY OR COMPLETENESS OF ELECTRONIC COPIES OF THIS PLAN SHEET.

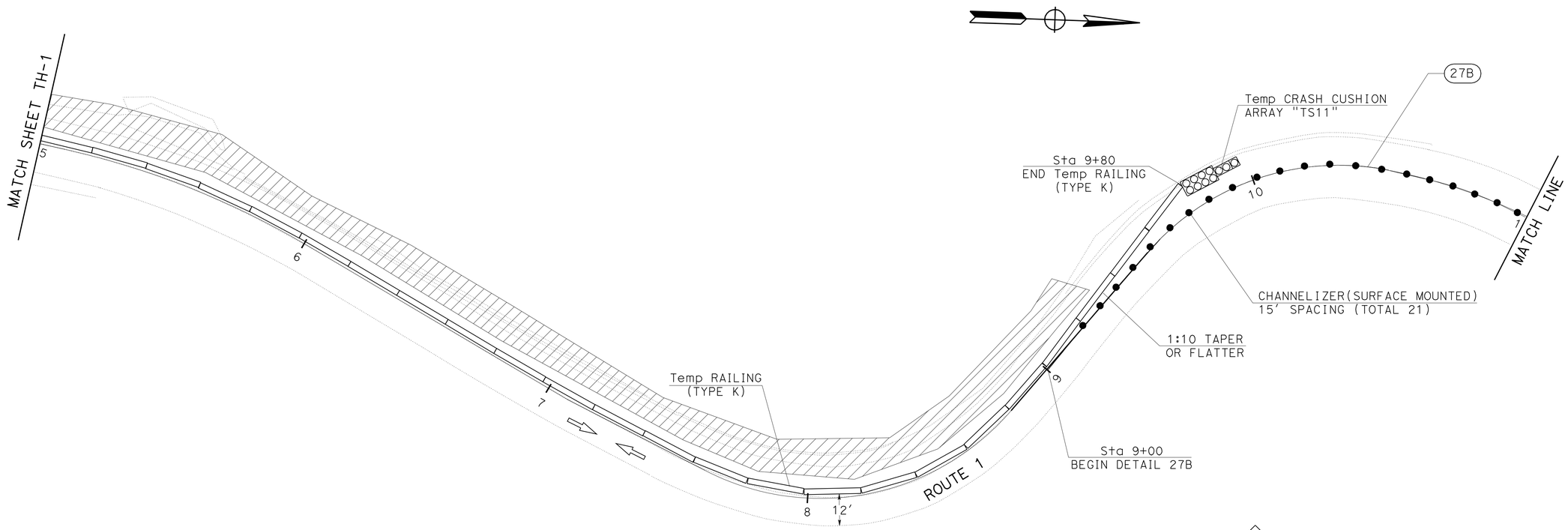

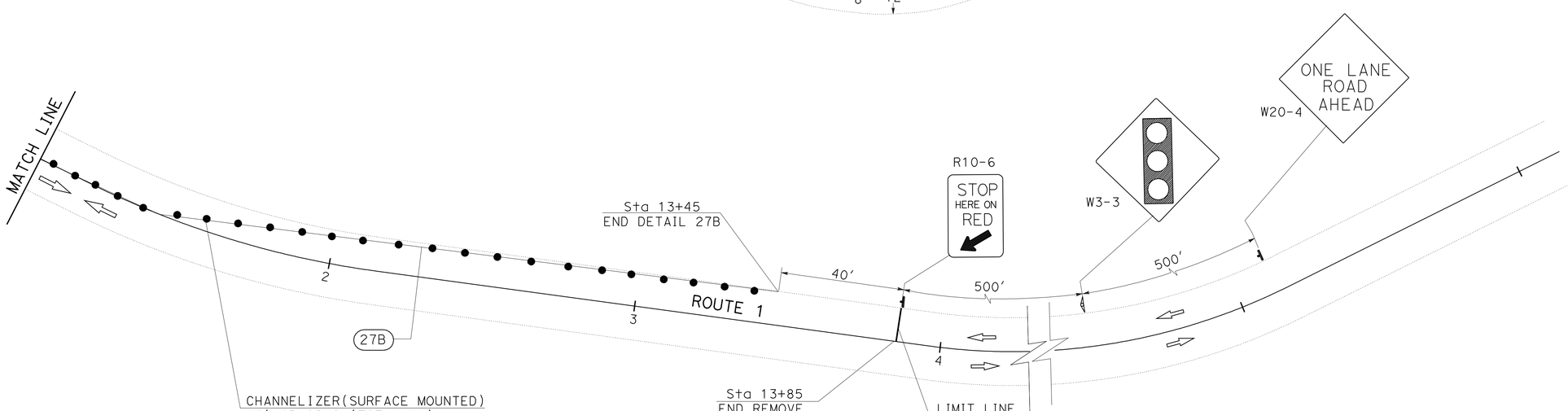

TRAFFIC HANDLING PLAN
(STAGE 1)

SCALE: 1" = 20'

TH-2

THIS PLAN ACCURATE FOR TRAFFIC HANDLING WORK ONLY.

REVISED BY | DATE REVISED

HASEEB YOUSAF | MAZIN AL-ALI

CALCULATED-DESIGNED BY | CHECKED BY

FUNCTIONAL SUPERVISOR: MOHAMMED QATAMI

STATE OF CALIFORNIA - DEPARTMENT OF TRANSPORTATION

Caltrans 06-TRAFFIC DESIGN

LAST REVISION 05-05-10 | DATE PLOTTED => 15-JUL-2010 | TIME PLOTTED => 08:26

Dist	COUNTY	ROUTE	POST MILES TOTAL PROJECT	SHEET No.	TOTAL SHEETS
04	Son	1	27.2	15	59

REGISTERED CIVIL ENGINEER DATE 05-10-10

PLANS APPROVAL DATE 7-12-10

REGISTERED PROFESSIONAL ENGINEER MAZIN H. AL-ALI No. 65523 Exp. 9/30/11 CIVIL STATE OF CALIFORNIA

THE STATE OF CALIFORNIA OR ITS OFFICERS OR AGENTS SHALL NOT BE RESPONSIBLE FOR THE ACCURACY OR COMPLETENESS OF ELECTRONIC COPIES OF THIS PLAN SHEET.

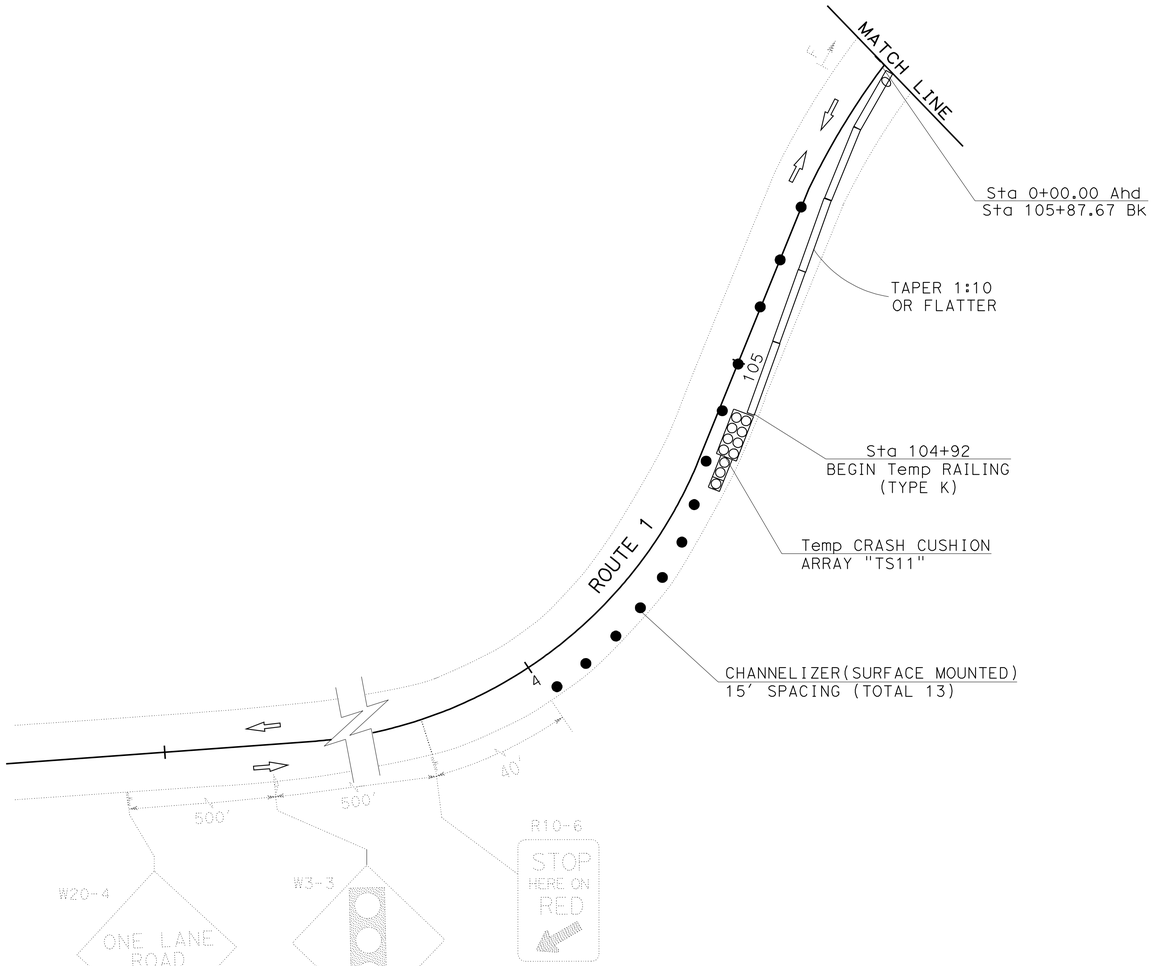

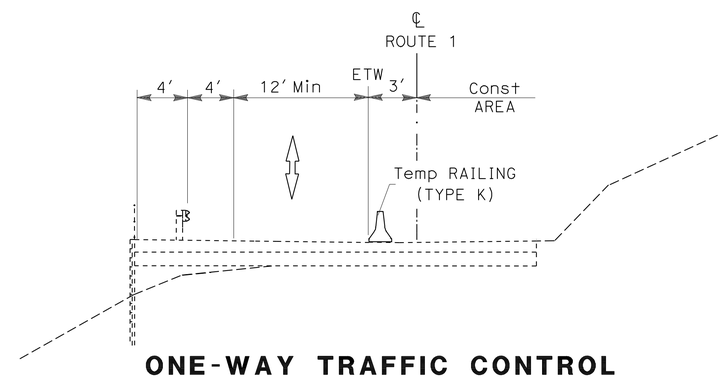

ONE-WAY TRAFFIC CONTROL

SECTION B-B

NO SCALE

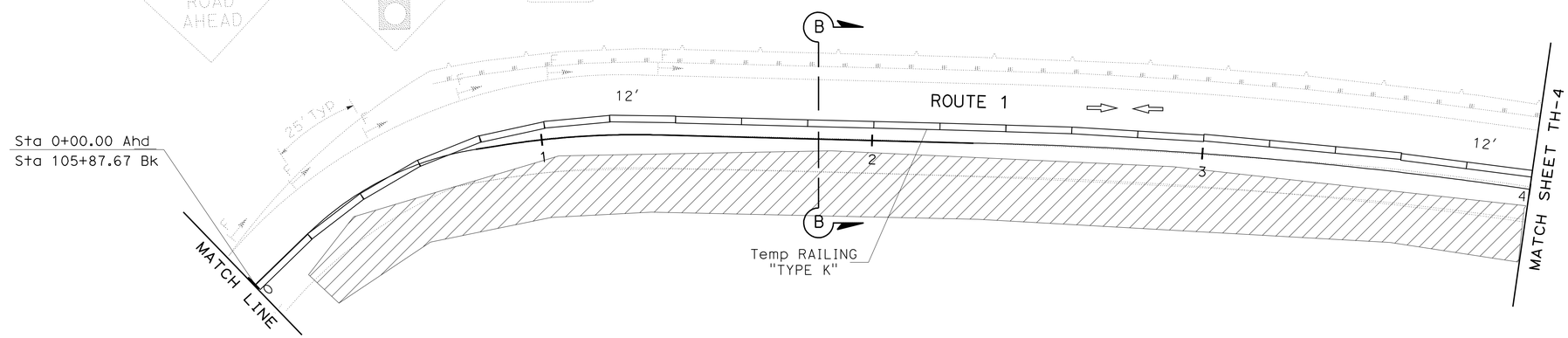

TRAFFIC HANDLING PLAN
(STAGE 2)

THIS PLAN ACCURATE FOR TRAFFIC HANDLING WORK ONLY.

SCALE: 1" = 20'

TH-3

STATE OF CALIFORNIA - DEPARTMENT OF TRANSPORTATION

Caltrans 06-TRAFFIC DESIGN

FUNCTIONAL SUPERVISOR: MOHAMMED QATAMI

CALCULATED-DESIGNED BY: HASEEB YOUSAF

CHECKED BY: MAZIN AL-ALI

REVISED BY

DATE REVISED

LAST REVISION 05-05-10

DATE PLOTTED => 15-JUL-2010

TIME PLOTTED => 08:26

Dist	COUNTY	ROUTE	POST MILES TOTAL PROJECT	SHEET No.	TOTAL SHEETS
04	Son	1	27.2	16	59

REGISTERED CIVIL ENGINEER DATE 05-10-10

PLANS APPROVAL DATE 7-12-10

REGISTERED PROFESSIONAL ENGINEER MAZIN H. AL-ALI No. 65523 Exp 9/30/11 CIVIL STATE OF CALIFORNIA

THE STATE OF CALIFORNIA OR ITS OFFICERS OR AGENTS SHALL NOT BE RESPONSIBLE FOR THE ACCURACY OR COMPLETENESS OF ELECTRONIC COPIES OF THIS PLAN SHEET.

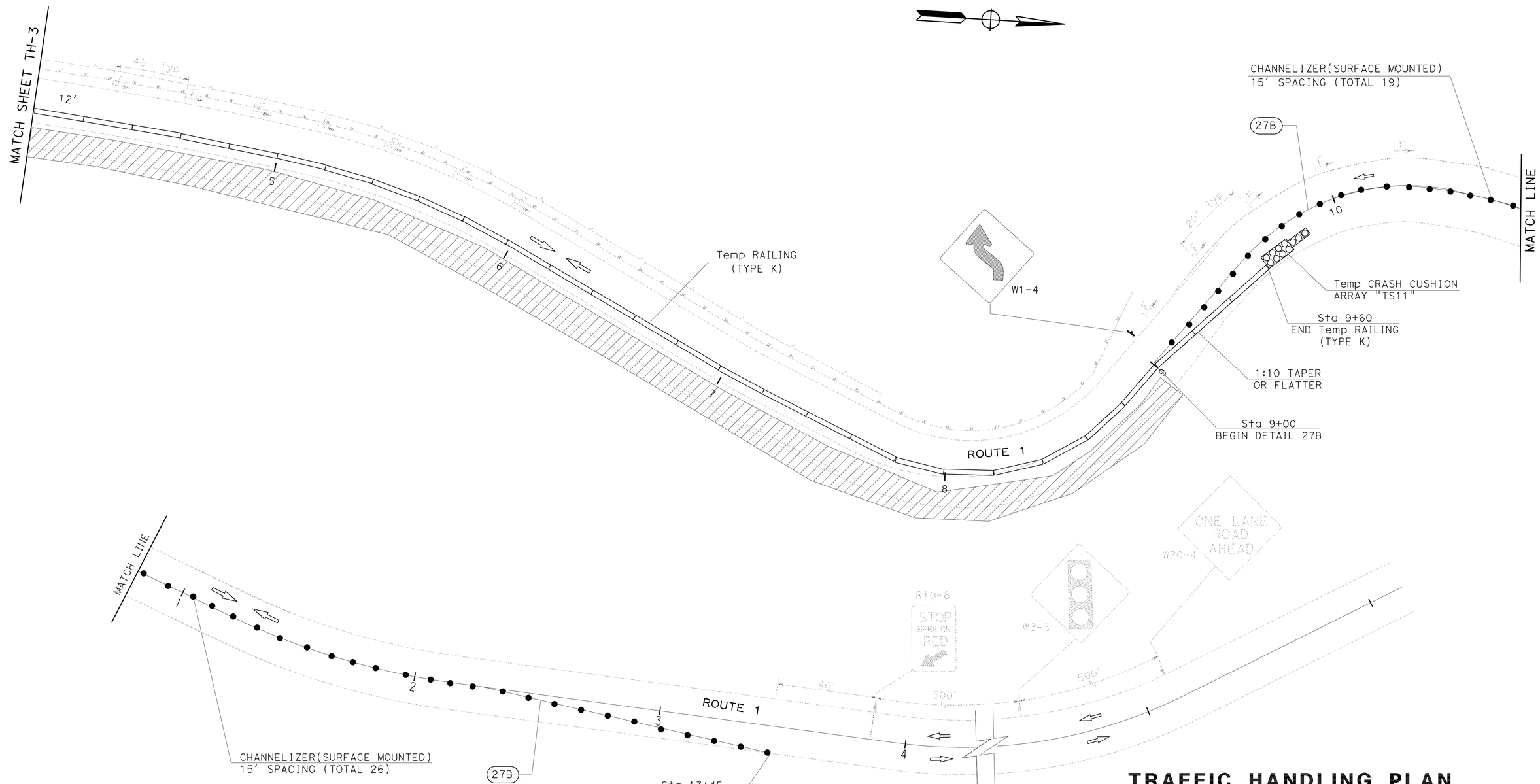

THIS PLAN ACCURATE FOR TRAFFIC HANDLING WORK ONLY.

TRAFFIC HANDLING PLAN
(STAGE 2)

SCALE: 1" = 20'

TH-4

STATE OF CALIFORNIA - DEPARTMENT OF TRANSPORTATION

Caltrans 06-TRAFFIC DESIGN

FUNCTIONAL SUPERVISOR: MOHAMMED QATAMI

CALCULATED-DESIGNED BY: HASEEB YOUSAF

CHECKED BY: MAZIN AL-ALI

REVISED BY

DATE REVISED

LAST REVISION 05-05-10

DATE PLOTTED => 15-JUL-2010

TIME PLOTTED => 08:26

BORDER LAST REVISED 4/11/2008

RELATIVE BORDER SCALE IS IN INCHES 0 2 3

USERNAME => trmartin

DGN FILE => 43s740md004.dgn

CU 06386

EA 3S7401

Dist	COUNTY	ROUTE	POST MILES TOTAL PROJECT	SHEET No.	TOTAL SHEETS
04	Son	1	27.2	17	59

REGISTERED CIVIL ENGINEER DATE 05-10-10

PLANS APPROVAL DATE 7-12-10

REGISTERED PROFESSIONAL ENGINEER MAZIN H. AL-ALI No. 65523 Exp 9/30/11 CIVIL STATE OF CALIFORNIA

THE STATE OF CALIFORNIA OR ITS OFFICERS OR AGENTS SHALL NOT BE RESPONSIBLE FOR THE ACCURACY OR COMPLETENESS OF ELECTRONIC COPIES OF THIS PLAN SHEET.

CHANNELIZER (SURFACE MOUNTED)

SHEET No.	EA
TH-1	13
TH-2	45
TH-3	13
TH-4	45
TOTAL	116

TEMPORARY CRASH CUSHION MODULE

SHEET No.	EA
TH-1	11
TH-2	11
TH-3	11
TH-4	11
TOTAL	44

TEMPORARY RAILING (TYPE K)

SHEET No.	LOCATION	LF
TH-1 THRU TH-2	Sta 104+87 TO Sta 105+87	100
	Sta 0+00 TO Sta 9+80	980
TH-3 THRU TH-4	Sta 104+87 TO Sta 105+87	100
	Sta 0+00 TO Sta 9+60	960
TOTAL		2,140

PAVEMENT DELINEATION (TRAFFIC HANDLING)

SHEET No.	LOCATION	DETAIL No.	REMOVE PAVEMENT MARKER	REMOVE YELLOW THERMOPLASTIC TRAFFIC STRIPE (HAZARDOUS WASTE)	TEMPORARY TRAFFIC STRIPE (PAINT)	TEMPORARY PAVEMENT MARKING (PAINT) LIMIT LINES
			EA	LF	LF	SQFT
TH-1 THRU TH-2	Sta 103+69 TO Sta 105+87	22	20	436		10
	Sta 0+00 TO Sta 13+85	22	117	2,770		
TH-2	Sta 9+00 TO Sta 13+45	27B			445	10
TH-4	Sta 9+00 TO Sta 13+45	27B			445	
TOTAL			137	3,206	890	20

CONSTRUCTION AREA SIGNS (TRAFFIC HANDLING)

SHEET No.	SIGN CODE	SIGN MESSAGE	PANEL SIZE	No. OF POST AND SIZE	INSTALL ROADSIDE (SSBM) (N)	No. OF SIGNS
TH-1 THRU TH-4	W3-3	AS SHOWN ON PLAN	36" x 36"	MOUNT ON FLASHING BEACON	2	
	R10-6	AS SHOWN ON PLAN	36" x 24"	1-4" x 4"		2
	W20-4	AS SHOWN ON PLAN	36" x 36"	1-4" x 6"		2
	W1-4	AS SHOWN ON PLAN	36" x 36"	1-4" x 6"		2

NOTES:

(SSBM) STRAP AND SADDLE BRACKET METHOD

(N) NOT A SEPARATE PAY ITEM, FOR INFORMATION ONLY

FOR ADDITIONAL CONSTRUCTION AREA SIGNS SEE CONSTRUCTION AREA SIGN PLANS.

TRAFFIC HANDLING QUANTITIES

THQ-1

REVISED BY | DATE REVISED

HASEEB YOUSAF | MAZIN AL-ALI

CALCULATED-DESIGNED BY | CHECKED BY

FUNCTIONAL SUPERVISOR: MOHAMMED QATAMI

STATE OF CALIFORNIA - DEPARTMENT OF TRANSPORTATION

Caltrans 06-TRAFFIC DESIGN

LAST REVISION 05-03-10 | DATE PLOTTED => 15-JUL-2010 | TIME PLOTTED => 08:26

Dist	COUNTY	ROUTE	POST MILES TOTAL PROJECT	SHEET No.	TOTAL SHEETS
04	Son	1	27.2	18	59

REGISTERED CIVIL ENGINEER DATE 05-10-10

7-12-10
PLANS APPROVAL DATE

REGISTERED PROFESSIONAL ENGINEER
MAZIN H. AL-ALI
No. 65523
Exp 9/30/11
CIVIL
STATE OF CALIFORNIA

THE STATE OF CALIFORNIA OR ITS OFFICERS OR AGENTS SHALL NOT BE RESPONSIBLE FOR THE ACCURACY OR COMPLETENESS OF ELECTRONIC COPIES OF THIS PLAN SHEET.

LEGEND

- DIRECTION OF TRAFFIC
- XX THERMOPLASTIC TRAFFIC STRIPE DETAIL No.
- RESET ROADSIDE SIGN (FROM / TO)
- DELINEATOR (TYPE F)

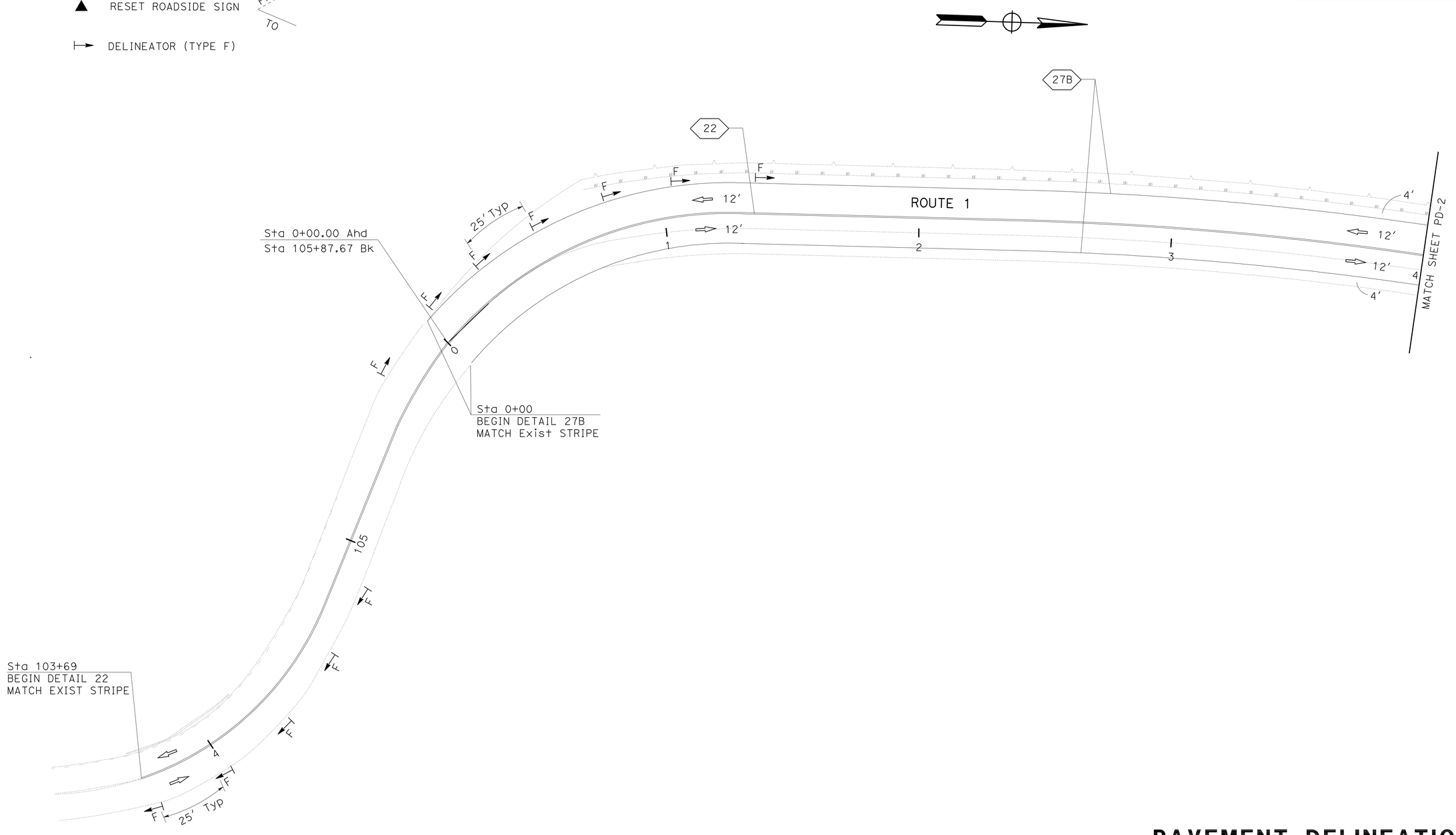

THIS PLAN ACCURATE FOR PAVEMENT DELINEATION WORK ONLY

PAVEMENT DELINEATION PLAN

PD-1

SCALE: 1" = 20'

STATE OF CALIFORNIA - DEPARTMENT OF TRANSPORTATION
Caltrans 06-TRAFFIC DESIGN

FUNCTIONAL SUPERVISOR: MOHAMMED QATAMI
CALCULATED-DESIGNED BY: HASEEB YOUSAF
CHECKED BY: MAZIN AL-ALI
REVISED BY
DATE REVISED

LAST REVISION 05-05-10
DATE PLOTTED => 15-JUL-2010
TIME PLOTTED => 07:09

Dist	COUNTY	ROUTE	POST MILES TOTAL PROJECT	SHEET No.	TOTAL SHEETS
04	Son	1	27.2	19	59

REGISTERED CIVIL ENGINEER DATE 05-10-10

7-12-10
PLANS APPROVAL DATE

REGISTERED PROFESSIONAL ENGINEER MAZIN H. AL-ALI No. 65523 Exp 9/30/11 CIVIL STATE OF CALIFORNIA

THE STATE OF CALIFORNIA OR ITS OFFICERS OR AGENTS SHALL NOT BE RESPONSIBLE FOR THE ACCURACY OR COMPLETENESS OF ELECTRONIC COPIES OF THIS PLAN SHEET.

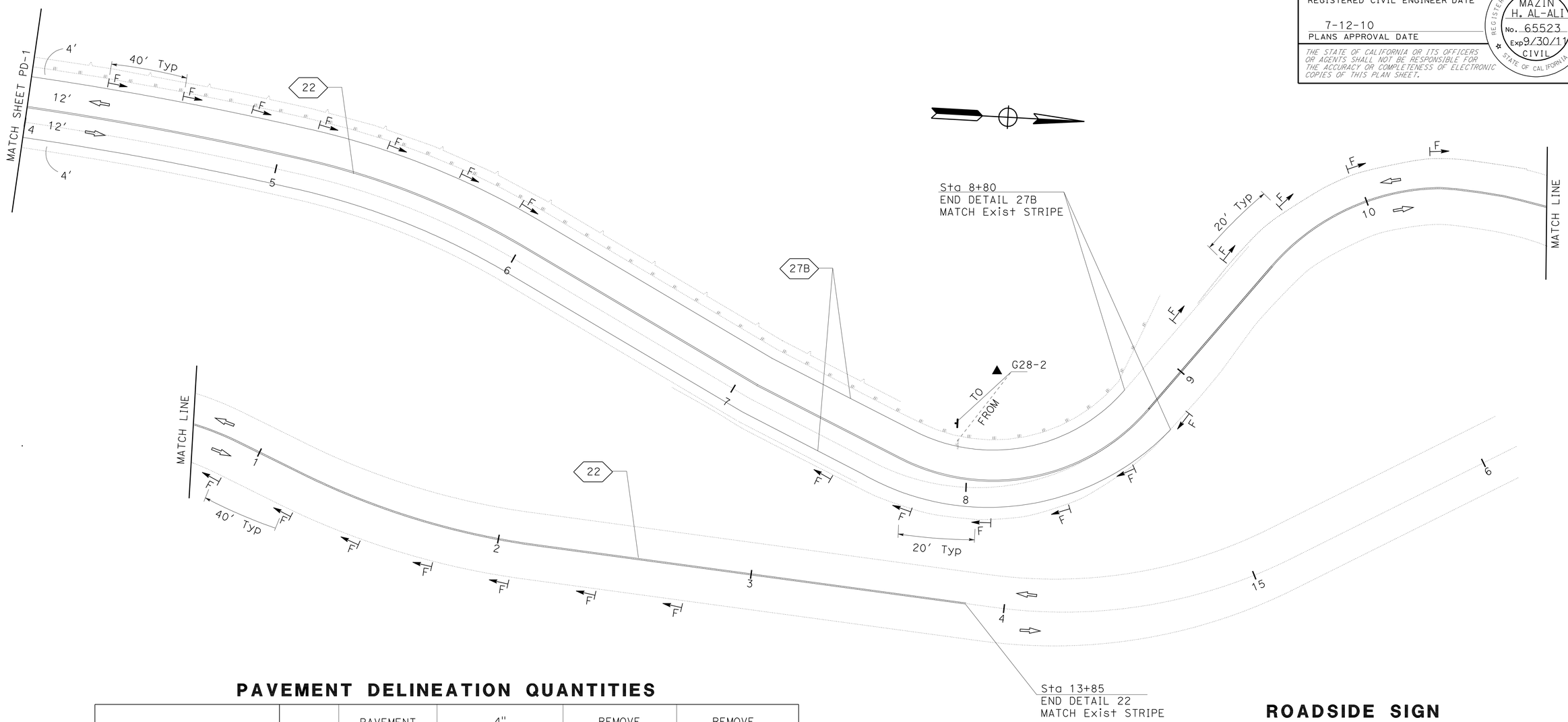

PAVEMENT DELINEATION QUANTITIES

LOCATION	DETAIL No.	PAVEMENT MARKER (RETRO-REFLECTIVE)	4" THERMOPLASTIC TRAFFIC STRIPE	REMOVE PAINTED TRAFFIC STRIPE	REMOVE PAINTED PAVEMENT MARKING
		EA	LF	LF	SQFT
Sta 103+69 TO Sta 105+87	22	20	436		
Sta 0+00 TO Sta 8+80	27B		1,760		
Sta 0+00 TO Sta 13+85	22	117	2,770		
FROM THQ-1				890	20
TOTAL		137	4,966	890	20

DELINEATORS

DELINEATOR (CLASS 1) (TYPE F)	
SHEET No.	EACH
PD-1	12
PD-2	25
TOTAL	37

ROADSIDE SIGN

RESET ROADSIDE SIGN		
SHEET No.	SIGN CODE	EACH
PD-2	G28-2	1

THIS PLAN ACCURATE FOR PAVEMENT DELINEATION WORK ONLY

PAVEMENT DELINEATION PLAN AND QUANTITIES

PD-2

SCALE: 1" = 20'

STATE OF CALIFORNIA - DEPARTMENT OF TRANSPORTATION
Caltrans 06-TRAFFIC DESIGN

FUNCTIONAL SUPERVISOR: MOHAMMED QATAMI
CALCULATED-DESIGNED BY: HASEEB YOUSAF
CHECKED BY: MAZIN AL-ALI
REVISED BY
DATE REVISED

LAST REVISION 05-05-10
DATE PLOTTED => 15-JUL-2010
TIME PLOTTED => 07:09

Dist	COUNTY	ROUTE	POST MILES TOTAL PROJECT	SHEET No.	TOTAL SHEETS
04	Son	1	27.2	20	59

RECEIVED PROFESSIONAL ENGINEER 04-12-10 DATE
UDAYA Y. SHANKAR No. 71268 Exp 12/31/11 CIVIL STATE OF CALIFORNIA

7-12-10
PLANS APPROVAL DATE

THE STATE OF CALIFORNIA OR ITS OFFICERS OR AGENTS SHALL NOT BE RESPONSIBLE FOR THE ACCURACY OR COMPLETENESS OF SCANNED COPIES OF THIS PLAN SHEET.

MBGR QUANTITIES

LOCATION	REMOVE MBGR	RECONSTRUCT MGBR	MBGR (WOOD POST)	ALTERNATIVE IN-LINE TERMINAL SYSTEM **	LAYOUT TYPE
Sta TO Sta	LF	LF	LF	EA	(N)
0+65.89 TO 8+91.00			662.5		11D
8+91.00 TO 9+41.00				1	
0+79.39 TO 2+77.70	198.31				
1+15.00 TO 2+27.50		112.5			
3+73.22 TO 5+21.45	148.23				
4+20.00 TO 4+70.00		50			
TOTAL	346.54	162.5	662.5	1	

(N) NOT A SEPARATE PAY ITEM, FOR INFORMATION ONLY.

ROADWAY QUANTITIES

LOCATION	ROADWAY EXCAVATION	EMBANKMENT (N)	HMA (TYPE A)	TACK COAT
Sta TO Sta	CY	CY	TON	TON
105+00.00 TO 105+87.67	13	2	26	0.05
0+00.00 TO 2+30.00	34	2	69	0.13
0+00.00 TO 0+65.89	2		41	0.06
0+65.89 TO 7+83.84	950	665	1952	3.60
7+83.84 TO 8+84.76	1		19	0.03
HMA DIKES			13	0.04
TOTAL	1000		2120	3.91

(N) NOT A SEPARATE PAY ITEM, FOR INFORMATION ONLY.

HOT MIX ASPHALT DIKE

LOCATION	PLACE HMA DIKE			HMA (TYPE A)	TACK COAT
	(TYPE A)	(TYPE C)	(TYPE F)		
Sta TO Sta	LF	LF	LF	TON	TON
105+00.00 TO 105+87.67	87.67			3	0.01
0+00.00 TO 2+30.00	230.00			7	0.01
7+75.00 TO 8+91.00			116	2	0.01
8+91.00 TO 9+66.00		75		1	0.01
TOTAL	317.67	75	116	13 *	0.04 *

* HMA QUANTITY INCLUDED IN ROADWAY QUANTITIES TABLE.

DRAINAGE QUANTITIES

DRAINAGE SYSTEM No. ⬡	DRAINAGE UNIT ○	REMOVE PIPE	18" PLASTIC PIPE	MINOR CONCRETE (MINOR STRUCTURE)	DI HEIGHT = H (N)	Misc IRON & STEEL	18" AFES	ROCK SLOPE PROTECTION FABRIC	ROCK SLOPE PROTECTION (FACING, METHOD B)	DESCRIPTION	LOCATIONS	SHEET No.	DRAINAGE SYSTEM No. ⬡	DRAINAGE UNIT ○
		LF	LF	CY	FT	LB	EA	SQYD	CY					
1	a			1.17	4.00	239				DI (TYPE G1)/GRATE (TYPE 24-12X)	14.0' R+ ℄ ROUTE 1 Sta 0+11.93	L-1	1	a
	b		25.0							18" PLASTIC PIPE				b
	c			1.22	4.24	239				DI (TYPE G1)/GRATE (TYPE 24-12X)	14'.0' R+ ℄ ROUTE 1 Sta 0+39.54			c
	d		25.0							18" PLASTIC PIPE				d
	e			1.64	4.29	239				DI (TYPE G2)/GRATE (TYPE 24-12X)	14.0' R+ ℄ ROUTE 1 Sta 0+67.53			e
	f	4								REMOVE 18" DIAMETER PIPE	14.0' R+ ℄ ROUTE 1 Sta 0+67.53			f
2	a	51								REMOVE 18" DIAMETER PIPE		L-1	2	a
	b						1			AFES	14.0' R+ ℄ ROUTE 1 Sta 3+00.99			b
	c		35.5							18" PLASTIC PIPE				c
	d			2.50	7.68	239				DI (TYPE G2)/GRATE (TYPE 24-12X)	21.0' L+ ℄ ROUTE 1 Sta 2+98.32			d
	e		15.0							18" PLASTIC PIPE				e
	f						1			AFES	35.9' L+ ℄ ROUTE 1 Sta 2+96.87			f
	g							8	1.33	RSP & RSP FABRIC	35.9' L+ ℄ ROUTE 1 Sta 2+96.87			g
TOTAL		55	100.5	6.53		956	2	8	1.33					

(N) NOT A SEPARATE PAY ITEM, FOR INFORMATION ONLY.

SUMMARY OF QUANTITIES

Q-1

STATE OF CALIFORNIA - DEPARTMENT OF TRANSPORTATION
Caltrans
06-DESIGN

FUNCTIONAL SUPERVISOR: GURBHAY BRAR
CALCULATED-DESIGNED BY: DAVID VELAZCO
CHECKED BY: YEDIYUR SHANKAR
REVISED BY
DATE REVISED

LAST REVISION 05-11-10
DATE PLOTTED => 15-JUL-2010
TIME PLOTTED => 09:39

Dist	COUNTY	ROUTE	POST MILES TOTAL PROJECT	SHEET No.	TOTAL SHEETS
04	Son	1	27.2	21	59

REGISTERED ELECTRICAL ENGINEER 05-10-10 DATE

7-12-10
PLANS APPROVAL DATE

REGISTERED PROFESSIONAL ENGINEER
DANIEL THANH VO
No. 17408
Exp. 9/30/10
ELECTRICAL
STATE OF CALIFORNIA

THE STATE OF CALIFORNIA OR ITS OFFICERS OR AGENTS SHALL NOT BE RESPONSIBLE FOR THE ACCURACY OR COMPLETENESS OF SCANNED COPIES OF THIS PLAN SHEET.

GENERAL NOTES:

1. LOWEST SAG POINT OF MESSENGER WIRE SHALL BE 25′ MINIMUM CLEARANCE FROM FINISHED GRADE OR ROADWAY.
2. OVERHEAD CONDUCTORS SHALL BE TIED ON MESSENGER WIRE AT EVERY 3′ MAXIMUM WITH SELF-CLINGING NYLON TIES.
3. OVERHEAD ENTRANCE CONDUIT FITTING SHALL BE INSTALLED IN SUCH A WAY SO THAT RAINWATER SHALL NOT SEEP INTO ELECTRICAL EQUIPMENT THROUGH THE ENTRANCE FITTING. FORM A DRIP LOOP AT ENTRANCE FITTING.
4. PROVIDE GUY WIRE, GUY GUARDS AND ANCHOR AS REQUIRED. POLE GUY SHALL BE INSTALLED AS DIRECTED BY ENGINEER.
5. ESTABLISH CONTINUOUS GROUND WITH SYSTEM GROUND TO ALL METAL PARTS IN SYSTEM BY BONDING JUMPERS AND CONDUITS.
6. GROUND ELECTRODE SHALL BE INSTALLED IN PULL BOX ADJACENT TO WOOD POLES AND BOND TO RIGID METAL CONDUIT, UNLESS OTHERWISE NOTED.
7. MAXIMUM SPACING BETWEEN WOOD POLES WITH OVERHEAD CONDUCTORS SHALL NOT EXCEED 200′.
8. SIGNS SHOWN ARE "CONSTRUCTION AREA SIGNS". SEE TRAFFIC HANDLING PLANS FOR DETAILS.

PROJECT NOTES:

1. POWER SHALL BE PROVIDED BY A GENERATOR WITH A BACK-UP GENERATOR. SEE DETAIL 4 ON E-4.
2. INSTALL STATE-FURNISHED MODEL 170 CONTROLLER ASSEMBLY ON TEMPORARY FOUNDATION PLATFORM FOR MODEL 332 CABINET PER DETAIL 5 ON SHEET E-4. INSTALL UPS IN CONTROLLER CABINET.
3. Ø1 LOOPS SHALL HAVE 5 TURNS.
4. 2"C, 2#6 (SIG), 2#8 (LTG)
   2#10 (NB FB, SIGN LTG),
   2#10 (SB FB, SIGN LTG), 1#8 (G)
5. 2"C, 2#6 (SIG),
   6#14 (SPARE), 6 DLC,
   2#14 (PPB Ø1), 3#14 (SIG Ø1),
   2#14 (PPB Ø2), 3#14 (SIG Ø2),
   2#10 (SIG NEUTRAL), 1#8 (G)
6. 2"C, 4#8 (LTG),
   6#14 (SPARE), 6 DLC,
   2#14 (PPB Ø1), 3#14 (SIG Ø1),
   2#14 (PPB Ø2), 3#14 (SIG Ø2),
   2#10 (SIG NEUTRAL),
   2#10 (NB FB, SIGN LTG),
   2#10 (SB FB, SIGN LTG),
   1#8 (G)
7. 2"C, 3#4, 1#8 (G)
8. 2#8 (LTG),
   2#10 (SB FB, SIGN LTG),
   3#14 (SPARE), 3 DLC,
   2#14 (PPB Ø2), 3#14 (SIG Ø2),
   1#10 (SIG NEUTRAL), 1#8 (G)
9. 2#10 (NB FB, SIGN LTG), 2#8 (LTG),
   3#14 (SPARE), 3 DLC,
   2#14 (PPB Ø1), 3#14 (SIG Ø1),
   1#10 (SIG NEUTRAL), 1#8 (G)
10. 1 DLC,
    2#10 (NB FB, SIGN LTG), 1#8 (G)
11. 2#10 (NB FB, SIGN LTG), 1#8 (G)
12. 1 DLC,
    2#10 (SB FB, SIGN LTG), 1#8 (G)
13. 2#10 (SB FB, SIGN LTG), 1#8 (G)

INDEX TO ELECTRICAL PLANS:

DRAWING No.	TITLE
E-1	TEMPORARY SIGNAL SYSTEM (PROJECT NOTES, SYMBOLS AND ABBREVIATIONS)
E-2 TO E-3	TEMPORARY SIGNAL SYSTEM
E-4 TO E-5	TEMPORARY SIGNAL SYSTEM (ELECTRICAL DETAILS)

LEGEND, SYMBOLS AND ABBREVIATIONS:

PROPOSED

Y Y — ADVANCE FLASHING BEACON WITH A W3-3 SIGN AND SIGN LIGHTING MOUNTED ON A WOOD POLE. SEE DETAIL 1 ON SHEET E-4.

WOOD POLE WITH 200 W HPS LUMINAIRE (ON MASTARM), SIGNAL HEAD (ON MASTARM AND POLE) AND CONDUIT RISER. SEE DETAIL 2 ON SHEET E-4.

WOOD POLE WITH 200 W HPS LUMINAIRE (ON MASTARM), SIGNAL HEAD, PPB, R10-6 SIGN AND CONDUIT RISER. SEE DETAIL 3 ON SHEET E-4.

(G) — GENERATOR

OH — OVERHEAD 5/8", 7 STRAND GALVANIZED MESSENGER WIRE WITH CONDUCTORS AS NOTED UNLESS OTHERWISE SPECIFIED

FUEL — FUEL TANK

—X—X— TEMPORARY FENCE WITH GATE

—F— FUEL LINE

UPS — UNINTERRUPTIBLE POWER SUPPLY

TEMPORARY SIGNAL SYSTEM

E-1

NO SCALE

THIS PLAN IS ACCURATE FOR ELECTRICAL WORK ONLY.

STATE OF CALIFORNIA - DEPARTMENT OF TRANSPORTATION
Caltrans 06-ELECTRICAL DESIGN

FUNCTIONAL SUPERVISOR: ALI BAKHDOUD
CALCULATED-DESIGNED BY: DANIEL VO
CHECKED BY: NORMA GALLEGOS
REVISED BY
DATE REVISED

LAST REVISION 05-17-10
DATE PLOTTED => 15-JUL-2010
TIME PLOTTED => 09:39

Dist	COUNTY	ROUTE	POST MILES TOTAL PROJECT	SHEET No.	TOTAL SHEETS
04	Son	1	27.2	22	59

REGISTERED ELECTRICAL ENGINEER 05-10-10 DATE

7-12-10
PLANS APPROVAL DATE

REGISTERED PROFESSIONAL ENGINEER DANIEL THANH VO No. 17408 Exp. 9/30/10 ELECTRICAL STATE OF CALIFORNIA

THE STATE OF CALIFORNIA OR ITS OFFICERS OR AGENTS SHALL NOT BE RESPONSIBLE FOR THE ACCURACY OR COMPLETENESS OF SCANNED COPIES OF THIS PLAN SHEET.

NOTE: SEE SHEET E-1 FOR NOTES.

FOR ACCURATE RIGHT OF WAY AND ACCESS DATA, CONTACT RIGHT OF WAY ENGINEERING AT THE DISTRICT OFFICE.

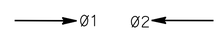

PHASE DIAGRAM
STEADY DEMAND SEQUENCE

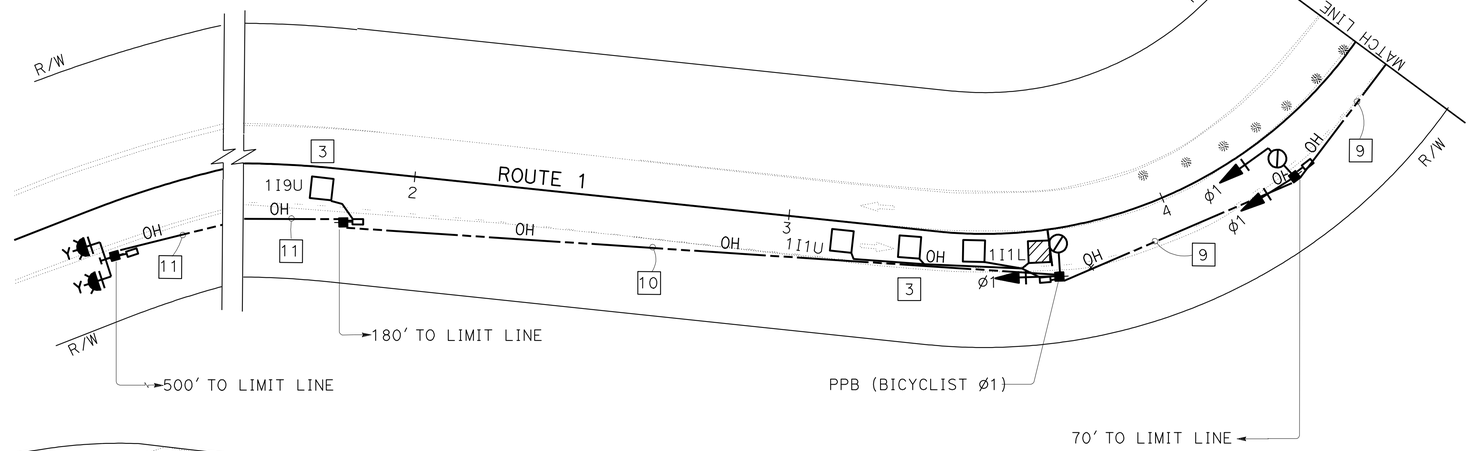

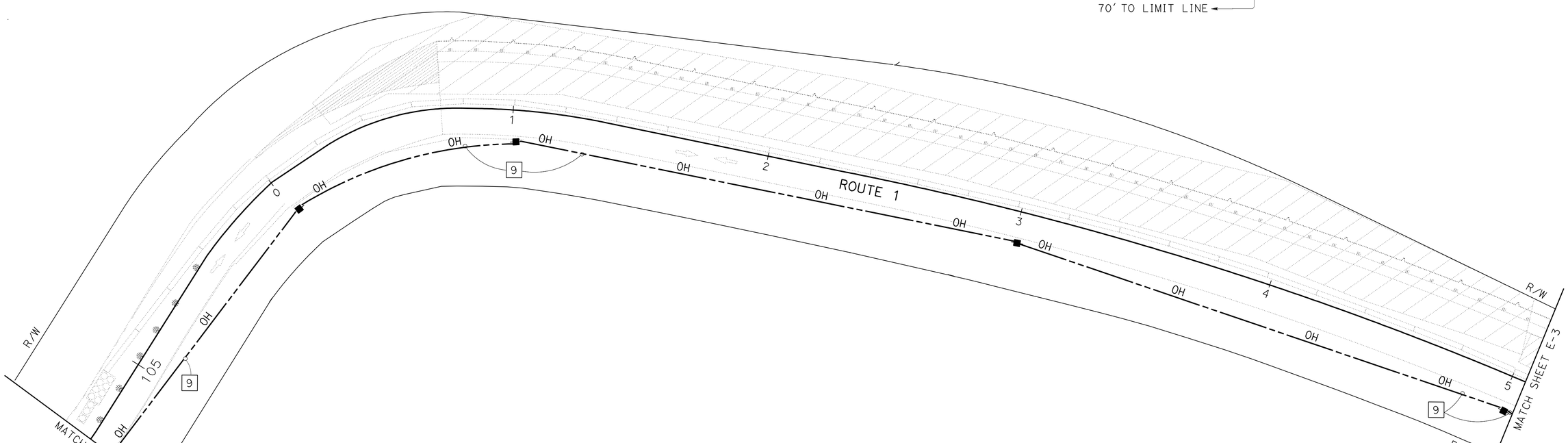

TEMPORARY SIGNAL SYSTEM

SCALE: 1" = 20'

E-2

THIS PLAN IS ACCURATE FOR ELECTRICAL WORK ONLY.

STATE OF CALIFORNIA - DEPARTMENT OF TRANSPORTATION
Caltrans 06-ELECTRICAL DESIGN

FUNCTIONAL SUPERVISOR: ALI BAKHDOUD

CALCULATED-DESIGNED BY: DANIEL VO
CHECKED BY: NORMA GALLEGOS

REVISED BY
DATE REVISED

LAST REVISION 02-10-10 | DATE PLOTTED => 15-JUL-2010 | TIME PLOTTED => 09:39

BORDER LAST REVISED 4/11/2008

RELATIVE BORDER SCALE IS IN INCHES 0 1 2 3

USERNAME => trpierce
DGN FILE => 43S740ua002.dgn

CU 06391

EA 3S7401

Dist	COUNTY	ROUTE	POST MILES TOTAL PROJECT	SHEET No.	TOTAL SHEETS
04	Son	1	27.2	23	59

REGISTERED ELECTRICAL ENGINEER 05-10-10 DATE

7-12-10
PLANS APPROVAL DATE

REGISTERED PROFESSIONAL ENGINEER DANIEL THANH VO No. 17408 Exp. 9/30/10 ELECTRICAL STATE OF CALIFORNIA

THE STATE OF CALIFORNIA OR ITS OFFICERS OR AGENTS SHALL NOT BE RESPONSIBLE FOR THE ACCURACY OR COMPLETENESS OF SCANNED COPIES OF THIS PLAN SHEET.

NOTE: SEE SHEET E-1 FOR NOTES.

FOR ACCURATE RIGHT OF WAY AND ACCESS DATA, CONTACT RIGHT OF WAY ENGINEERING AT THE DISTRCT OFFICE.

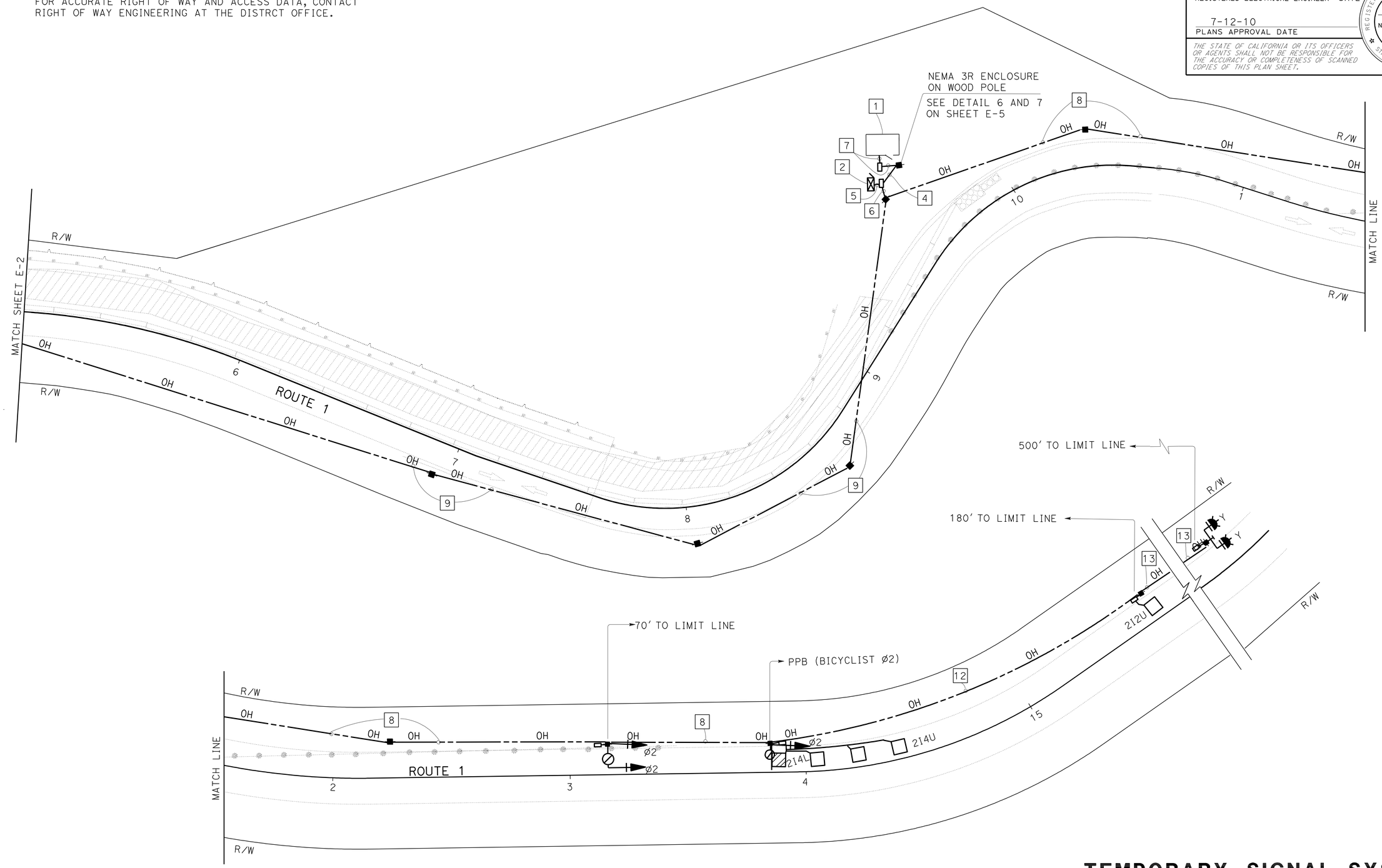

THIS PLAN IS ACCURATE FOR ELECTRICAL WORK ONLY.

TEMPORARY SIGNAL SYSTEM

SCALE: 1" = 20'

E-3

STATE OF CALIFORNIA - DEPARTMENT OF TRANSPORTATION
Caltrans 06-ELECTRICAL DESIGN

FUNCTIONAL SUPERVISOR: ALI BAKHDOUD
CALCULATED-DESIGNED BY: DANIEL VO
CHECKED BY: NORMA GALLEGOS
REVISED BY
DATE REVISED

LAST REVISION 02-10-10
DATE PLOTTED => 24-AUG-2010
TIME PLOTTED => 13:00

BORDER LAST REVISED 4/11/2008
RELATIVE BORDER SCALE IS IN INCHES 0 1 2 3
USERNAME => trmikesl
DGN FILE => 43S740ua003.dgn
CU 06391
EA 3S7401

Dist	COUNTY	ROUTE	POST MILES TOTAL PROJECT	SHEET No.	TOTAL SHEETS
04	Son	1	27.2	24	59

REGISTERED ELECTRICAL ENGINEER 05-10-10 DATE

7-12-10
PLANS APPROVAL DATE

REGISTERED PROFESSIONAL ENGINEER DANIEL THANH VO No. 17408 Exp. 9/30/10 ELECTRICAL STATE OF CALIFORNIA

THE STATE OF CALIFORNIA OR ITS OFFICERS OR AGENTS SHALL NOT BE RESPONSIBLE FOR THE ACCURACY OR COMPLETENESS OF SCANNED COPIES OF THIS PLAN SHEET.

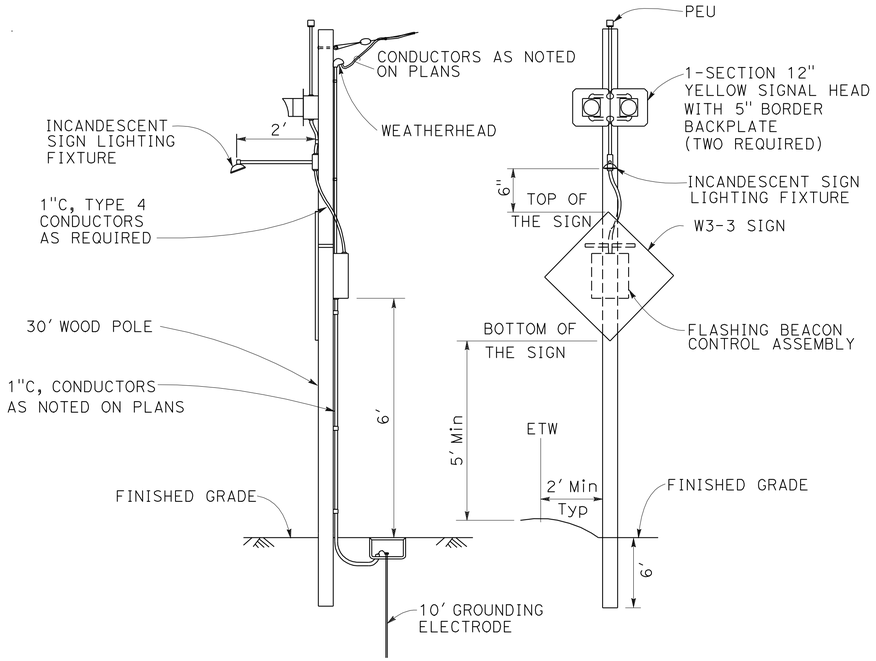

DETAIL 1

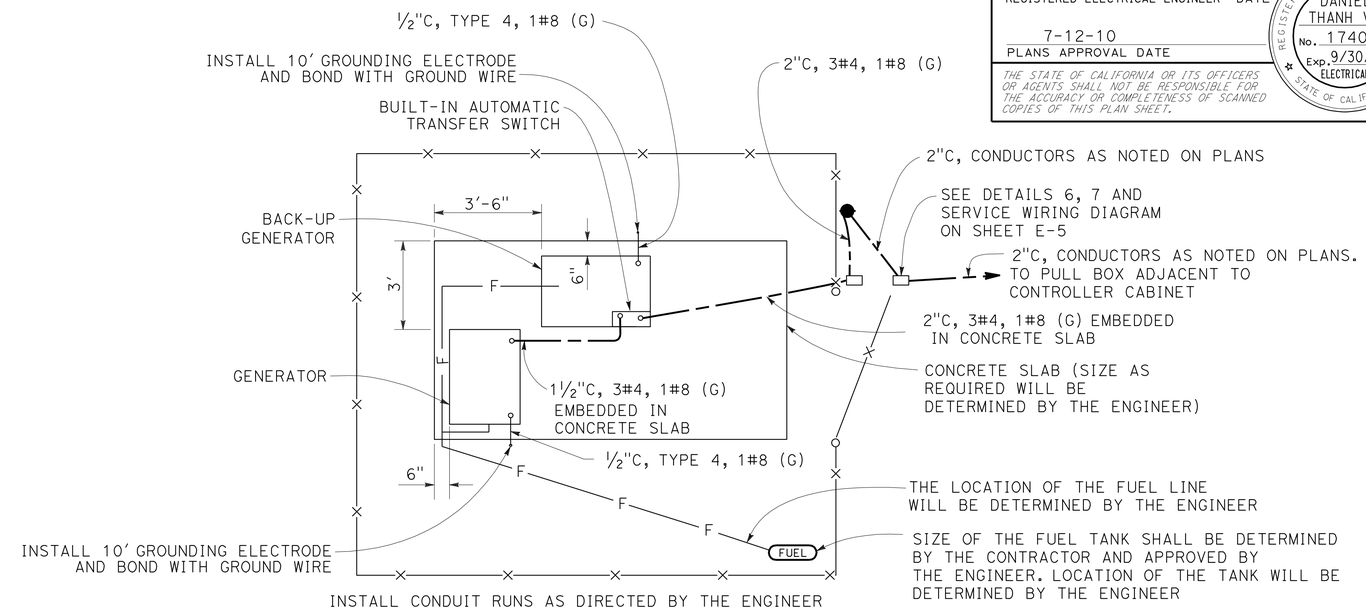

GENERATOR WITH A BACK-UP GENERATOR

DETAIL 4

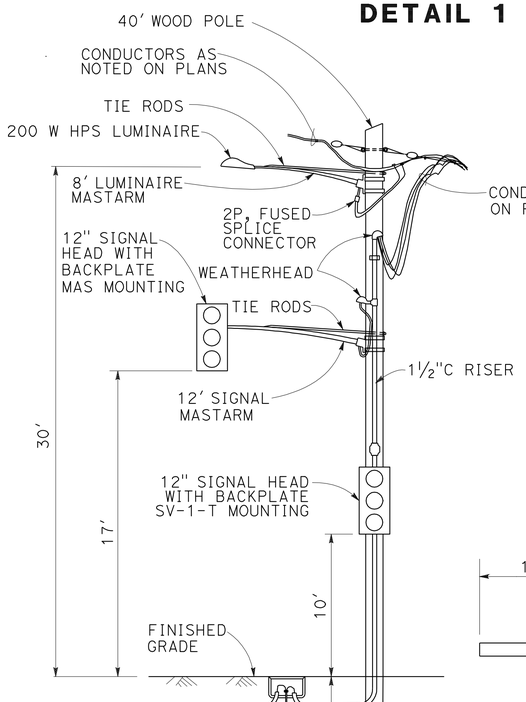

DETAIL 2

NOTE:

INSTALL REDWOOD CLEATS FOR WOOD POLE WITH MASTARM MOUNTED SIGNALS 2' BELOW GRADE AT RIGHT ANGLES TO MASTARM, EXCEPT WHEN POLE IS PLACED IN SOLID ROCK.

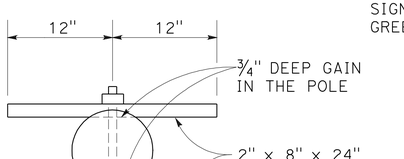

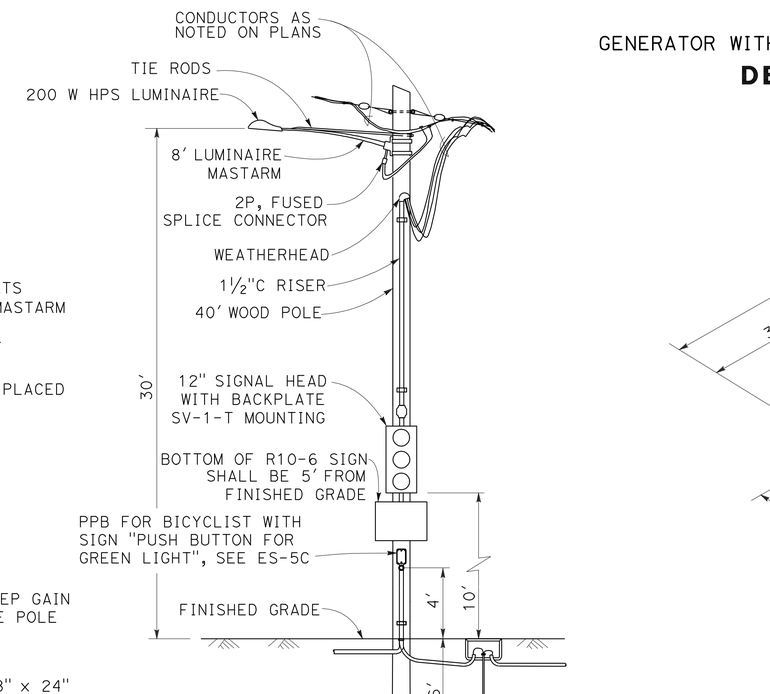

DETAIL 3

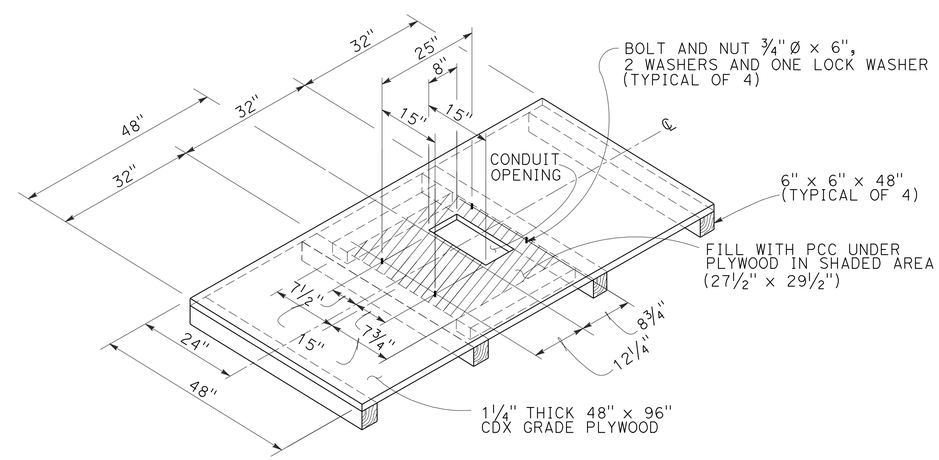

TEMPORARY MODEL 332 CABINET FOUNDATION PLATFORM

DETAIL 5

THIS PLAN IS ACCURATE FOR ELECTRICAL WORK ONLY.

TEMPORARY SIGNAL SYSTEM
(ELECTRICAL DETAILS)

NO SCALE

E-4

STATE OF CALIFORNIA - DEPARTMENT OF TRANSPORTATION
Caltrans 06-ELECTRICAL DESIGN

FUNCTIONAL SUPERVISOR: ALI BAKHDOUD
CALCULATED-DESIGNED BY: DANIEL VO
CHECKED BY: NORMA GALLEGOS
REVISED BY
DATE REVISED

LAST REVISION 05-17-10
DATE PLOTTED => 19-JUL-2010
TIME PLOTTED => 12:08

BORDER LAST REVISED 4/11/2008
RELATIVE BORDER SCALE IS IN INCHES 0 1 2 3
USERNAME => trmnguye
DGN FILE => 43S740ua004.dgn
CU 06391
EA 3S7401

Dist	COUNTY	ROUTE	POST MILES TOTAL PROJECT	SHEET No.	TOTAL SHEETS
04	Son	1	27.2	25	59

REGISTERED ELECTRICAL ENGINEER 05-10-10 DATE

7-12-10
PLANS APPROVAL DATE

REGISTERED PROFESSIONAL ENGINEER
DANIEL THANH VO
No. 17408
Exp. 9/30/10
ELECTRICAL
STATE OF CALIFORNIA

THE STATE OF CALIFORNIA OR ITS OFFICERS OR AGENTS SHALL NOT BE RESPONSIBLE FOR THE ACCURACY OR COMPLETENESS OF SCANNED COPIES OF THIS PLAN SHEET.

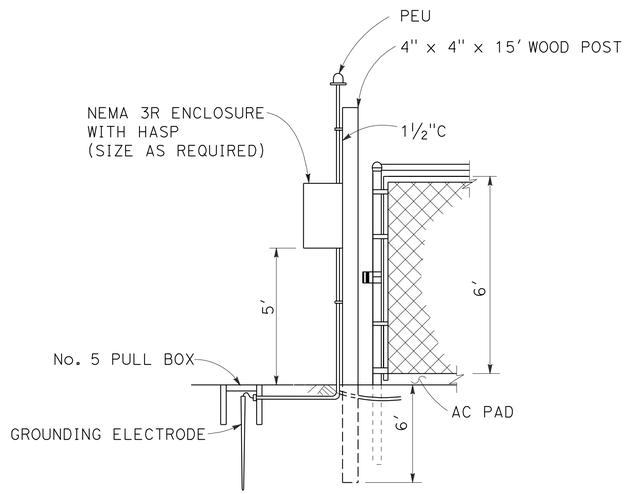

ELECTRICAL SERVICE SIDE VIEW
DETAIL 6

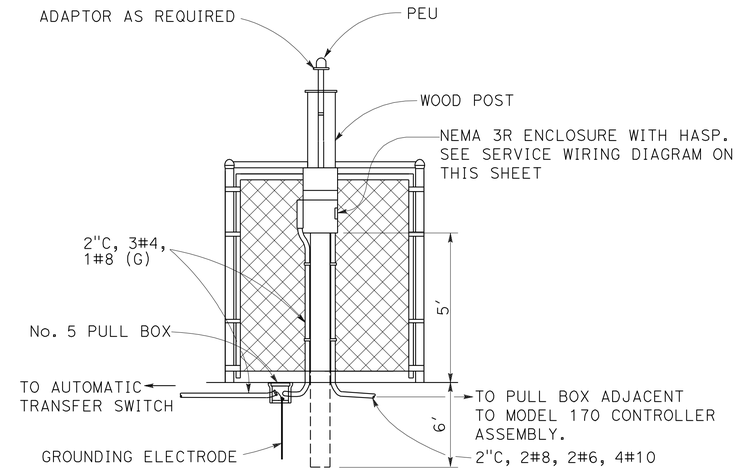

ELECTRICAL SERVICE FRONT VIEW
DETAIL 7

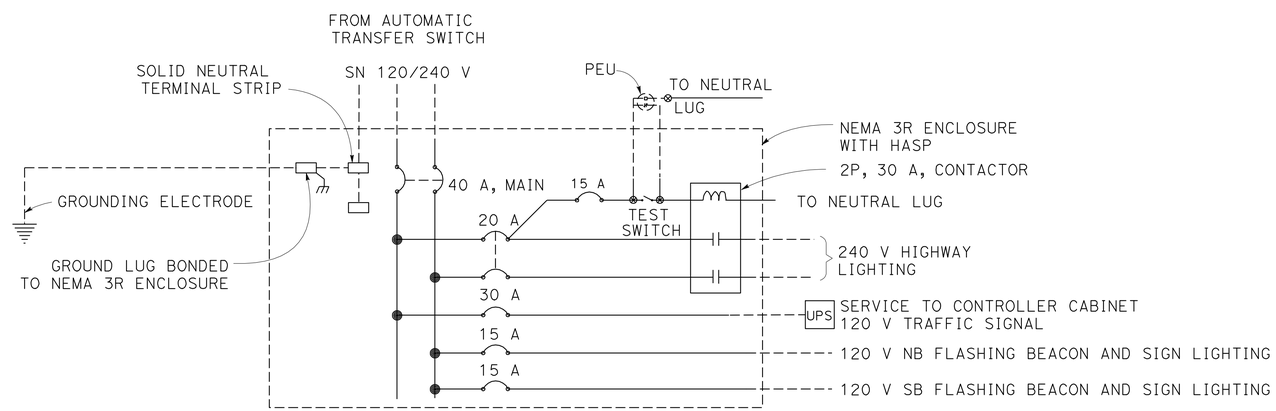

PROVIDE ITEMS SHOWN IN THIS DIAGRAM
SEE REVISED STANDARD PLANS ES-2C AND ES-2D FOR MORE INFORMATION

ELECTRICAL SERVICE WIRING DIAGRAM

TEMPORARY SIGNAL SYSTEM
(ELECTRICAL DETAILS)

NO SCALE

E-5

THIS PLAN IS ACCURATE FOR ELECTRICAL WORK ONLY.

REVISED BY | DATE REVISED
DANIEL VO | NORMA GALLEGOS
CALCULATED-DESIGNED BY | CHECKED BY
FUNCTIONAL SUPERVISOR
ALI BAKHDOUD

STATE OF CALIFORNIA - DEPARTMENT OF TRANSPORTATION
Caltrans 06-ELECTRICAL DESIGN

LAST REVISION 05-17-10 | DATE PLOTTED => 15-JUL-2010 | TIME PLOTTED => 11:19

DIST	COUNTY	ROUTE	POST MILES TOTAL PROJECT	SHEET NO.	TOTAL SHEETS
04	Son	1	27.2	26	59

Randell D. Hiatt
REGISTERED CIVIL ENGINEER

June 6, 2008
PLANS APPROVAL DATE

REGISTERED PROFESSIONAL ENGINEER
Randell D. Hiatt
No. C50200
Exp. 6-30-09
CIVIL
STATE OF CALIFORNIA

The State of California or its officers or agents shall not be responsible for the accuracy or completeness of electronic copies of this plan sheet.

To accompany plans dated 7-12-10

2006 REVISED STANDARD PLAN RSP A77E2

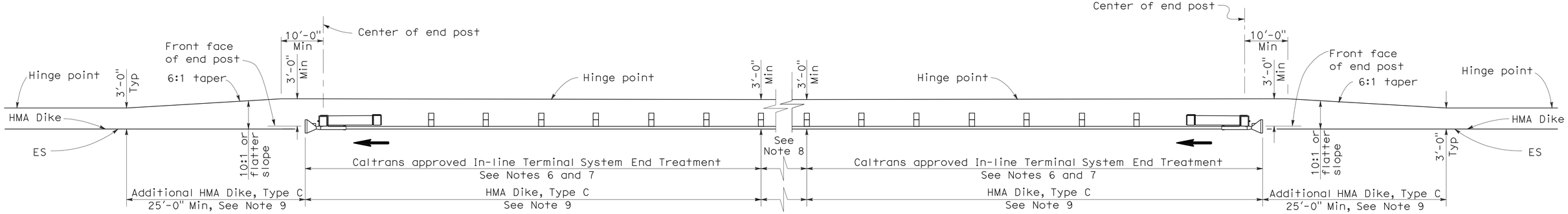

TYPE 11D LAYOUT

(EMBANKMENT GUARD RAILING INSTALLATION WITH IN-LINE END TREATMENT AT EACH END OF RAILING)
See Note 5

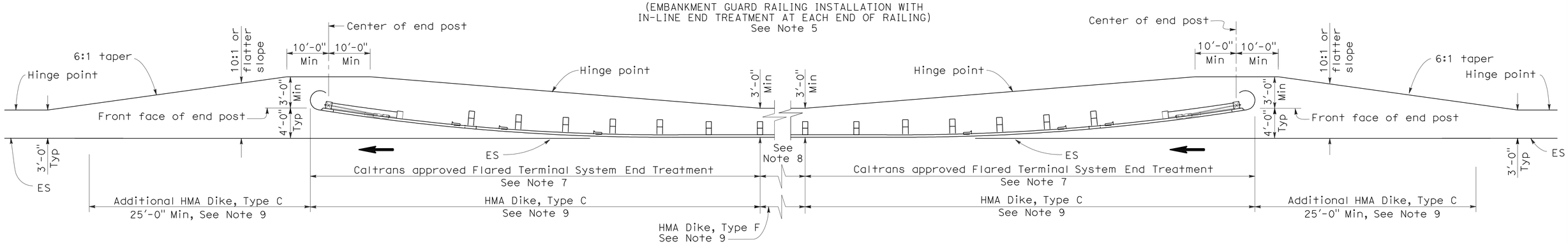

TYPE 11E LAYOUT

(EMBANKMENT GUARD RAILING INSTALLATION WITH FLARED END TREATMENT AT EACH END OF RAILING)
See Note 5

NOTES:

1. Line post, blocks and hardware to be used are shown on Standard Plans A77A1, A77A2, A77B1, A77C1 and A77C2.
2. Guard rail post spacing to be 6'-3" center to center, except as otherwise noted.
3. Except as noted, line posts are 6" x 8" x 6'-0" wood with 6" x 8" x 1'-2" wood blocks. W6 x 9 steel posts, 6'-0" in length, with 6" x 8" x 1'-2" notched wood blocks or plastic blocks may be used for 6" x 8" x 6'-0" wood post with 6" x 8" x 1'-2" wood blocks where applicable and when specified.
4. Direction of adjacent traffic indicated by ⟶.
5. Layout Types 11D through 11L, shown on the A77E Series of Revised Standard Plans, are typically used where guard railing is recommended to shield embankment slopes and a crashworthy end treatment is required for both directions of traffic.
6. In-line Terminal System End Treatments are used where site conditions will not accommodate a flared end treatment.
7. The type of terminal system end treatment to be used will be shown on the Project Plans.
8. Dependent on site conditions (embankment height and side slope), construction of additional guard railing (length equal to multiples of 12'-6" with 6'-3" post spacing) may be advisable.
9. Where placement of dike is required with guard railing installations, see Revised Standard Plan RSP A77C4 for dike positioning details.

STATE OF CALIFORNIA
DEPARTMENT OF TRANSPORTATION

METAL BEAM GUARD RAILING TYPICAL LAYOUTS FOR EMBANKMENTS

NO SCALE

RSP A77E2 DATED JUNE 6, 2008 SUPERSEDES STANDARD PLAN A77E2
DATED MAY 1, 2006 - PAGE 49 OF THE STANDARD PLANS BOOK DATED MAY 2006.

REVISED STANDARD PLAN RSP A77E2

12-10-07

DIST	COUNTY	ROUTE	POST MILES TOTAL PROJECT	SHEET NO.	TOTAL SHEETS
04	Son	1	27.2	27	59

LICENSED LANDSCAPE ARCHITECT

April 3, 2009
PLANS APPROVAL DATE

The State of California or its officers or agents shall not be responsible for the accuracy or completeness of electronic copies of this plan sheet.

LICENSED LANDSCAPE ARCHITECT — Gregory A. Balzer — 02-28-11 Renewal Date — 03-04-09 Date — STATE OF CALIFORNIA

To accompany plans dated 7-12-10

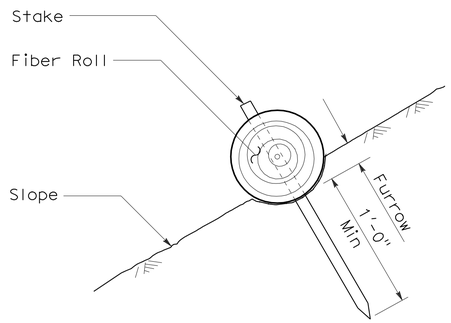

SECTION

FIBER ROLL (TYPE 1)

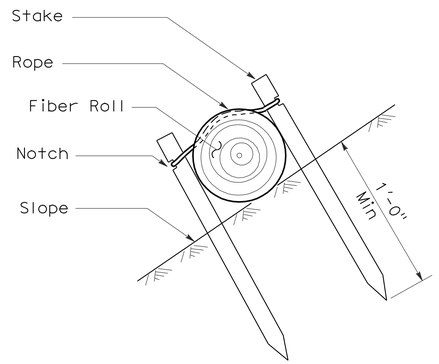

SECTION

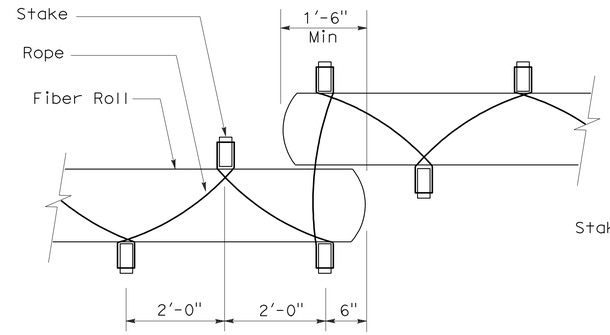

PLAN

FIBER ROLL (TYPE 2)

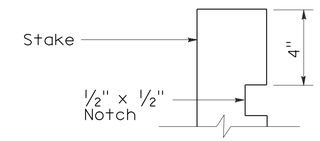

ELEVATION

STAKE NOTCH DETAIL

NOTES:

1. Fiber roll spacing varies depending upon slope inclination.
2. Installations shown in the perspectives are for slope inclination of 10:1 and steeper.

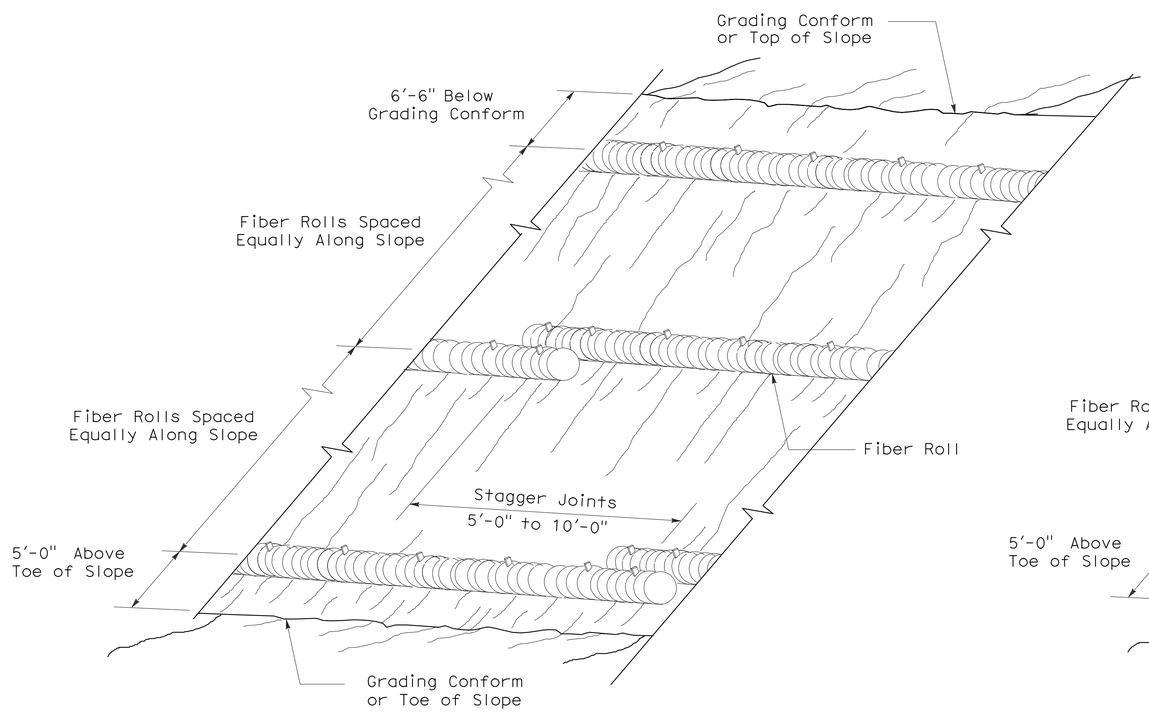

PERSPECTIVE

FIBER ROLL (TYPE 1)

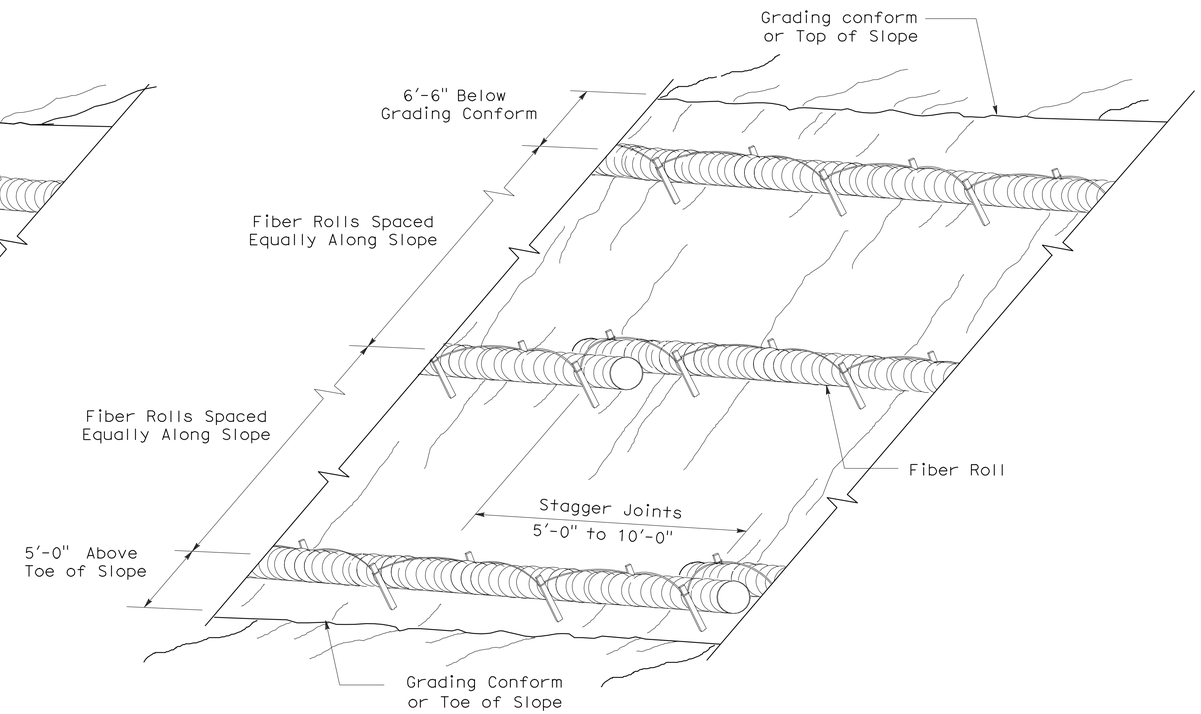

PERSPECTIVE

FIBER ROLL (TYPE 2)

STATE OF CALIFORNIA
DEPARTMENT OF TRANSPORTATION

EROSION CONTROL DETAILS (FIBER ROLL)

NO SCALE

RNSP H51 DATED APRIL 3, 2009 SUPERSEDES NSP H51 DATED DECEMBER 1, 2006 THAT SUPPLEMENTS THE STANDARD PLANS BOOK DATED MAY 2006.

REVISED NEW STANDARD PLAN RNSP H51

2006 REVISED NEW STANDARD PLAN RNSP H51

3-4-09

DIST	COUNTY	ROUTE	POST MILES TOTAL PROJECT	SHEET NO.	TOTAL SHEETS
04	Son	1	27.2	28	59

Gregory A. Balzer
LICENSED LANDSCAPE ARCHITECT

June 5, 2009
PLANS APPROVAL DATE

LICENSED LANDSCAPE ARCHITECT Gregory A. Balzer 2578 Expiration 2-28-11 Renewal Date 5-14-09 Date STATE OF CALIFORNIA

The State of California or its officers or agents shall not be responsible for the accuracy or completeness of electronic copies of this plan sheet.

To accompany plans dated 7-12-10

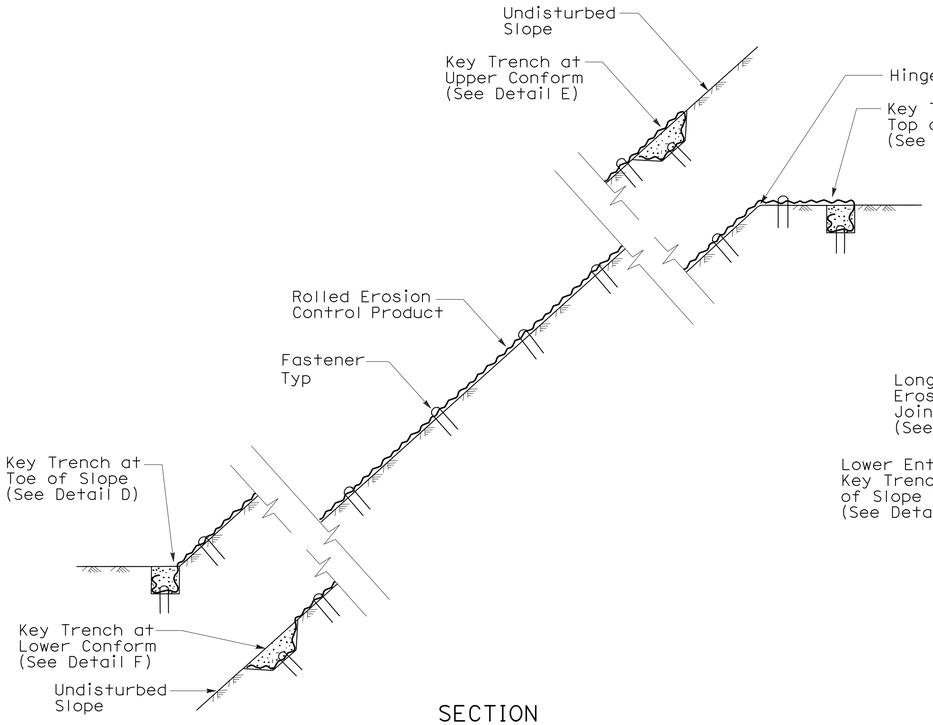

SECTION

ROLLED EROSION CONTROL PRODUCT ON SLOPE WITH VARIOUS KEY ENTRENCHMENTS

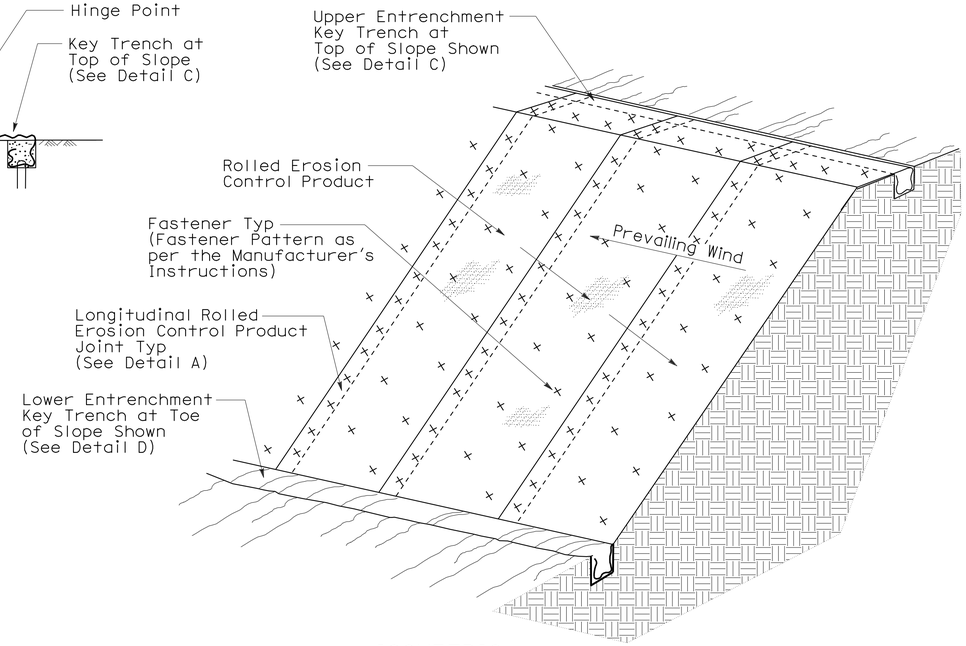

ISOMETRIC

ROLLED EROSION CONTROL PRODUCT ON SLOPE

NOTE:

1. Fiber Roll/Compost Sock shown for reference purposes only.
2. If transverse rolled erosion control product joints are required on slopes, see Detail B.

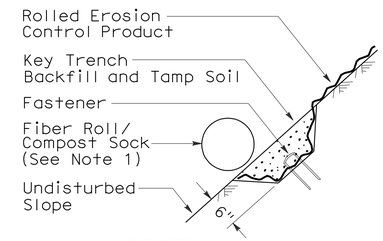

SECTION

DETAIL F
KEY TRENCH AT LOWER CONFORM

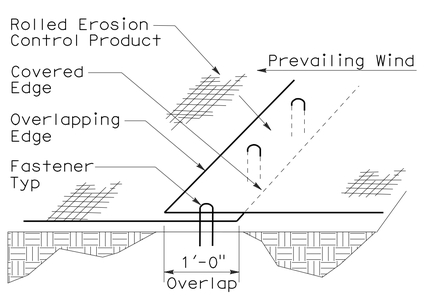

PERSPECTIVE

DETAIL A
LONGITUDINAL ROLLED EROSION CONTROL PRODUCT JOINT

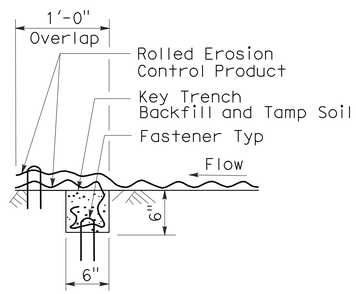

SECTION

DETAIL B
TRANSVERSE ROLLED EROSION CONTROL PRODUCT JOINT

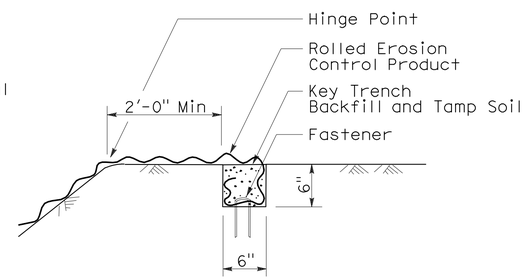

SECTION

DETAIL C
KEY TRENCH AT TOP OF SLOPE

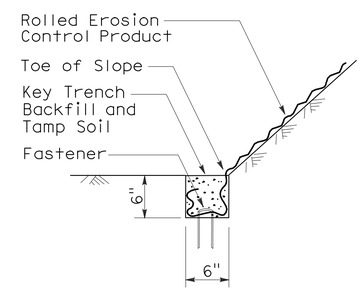

SECTION

DETAIL D
KEY TRENCH AT TOE OF SLOPE

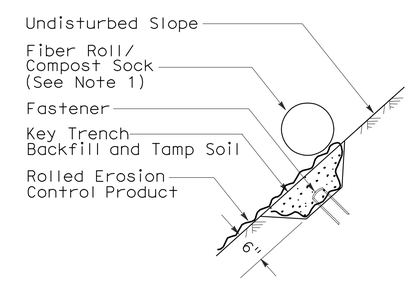

SECTION

DETAIL E
KEY TRENCH AT UPPER CONFORM

STATE OF CALIFORNIA
DEPARTMENT OF TRANSPORTATION

ROLLED EROSION CONTROL PRODUCT

NO SCALE

NSP H53 DATED JUNE 5, 2009 SUPPLEMENTS
THE STANDARD PLANS BOOK DATED MAY 2006.

NEW STANDARD PLAN NSP H53

2006 NEW STANDARD PLAN NSP H53

3-4-09

DIST	COUNTY	ROUTE	POST MILES TOTAL PROJECT	SHEET NO.	TOTAL SHEETS
04	Son	1	27.2	29	59

Randell D. Hiatt
REGISTERED CIVIL ENGINEER

June 6, 2008
PLANS APPROVAL DATE

REGISTERED PROFESSIONAL ENGINEER
Randell D. Hiatt
No. C50200
Exp. 6-30-09
CIVIL
STATE OF CALIFORNIA

The State of California or its officers or agents shall not be responsible for the accuracy or completeness of electronic copies of this plan sheet.

To accompany plans dated 7-12-10

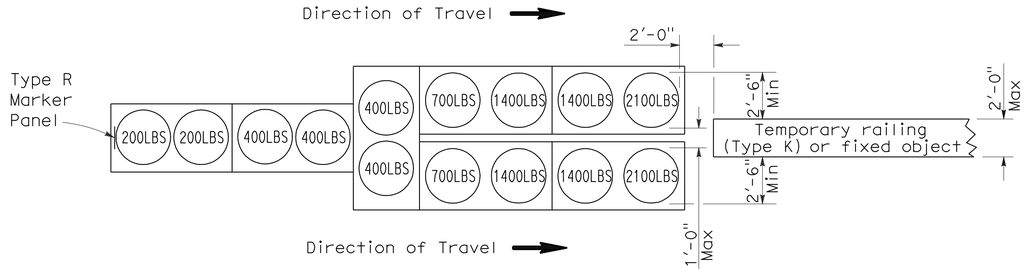

ARRAY 'TU14'

Approach speed 45 mph or more

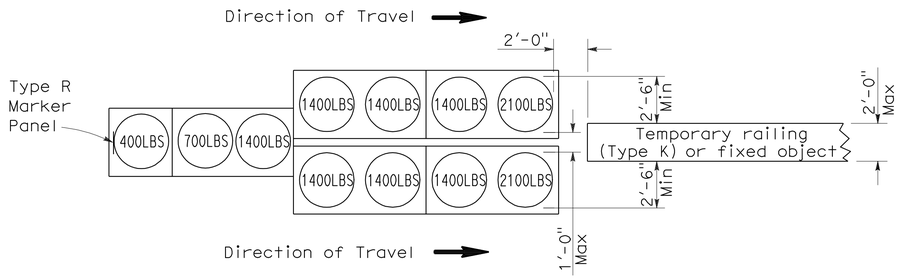

ARRAY 'TU11'

Approach speed less than 45 mph

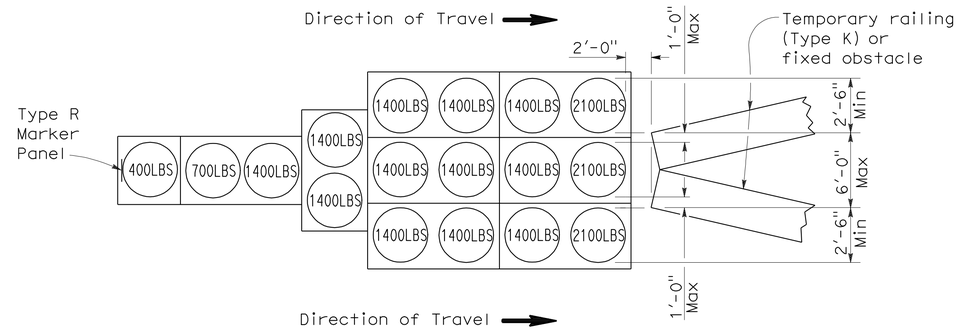

ARRAY 'TU17'

Approach speed less than 45 mph

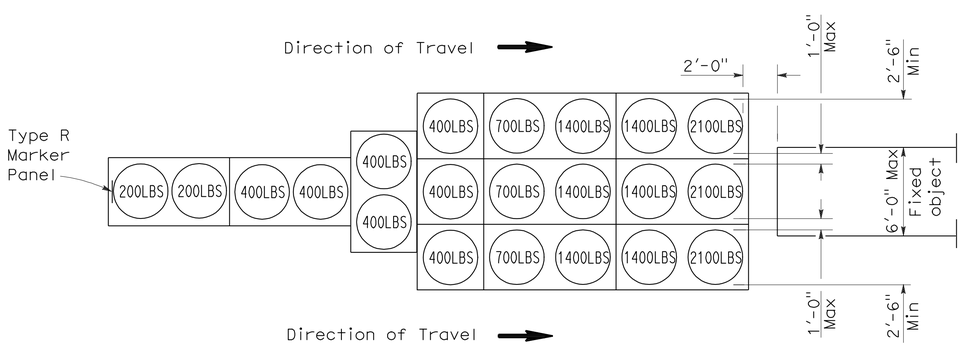

ARRAY 'TU21'

Approach speed 45 mph or more

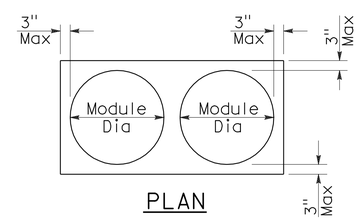

PLAN

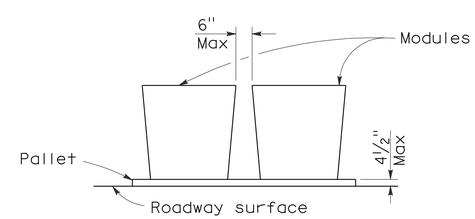

ELEVATION

CRASH CUSHION PALLET DETAIL

See Note 7

NOTES:

1. (XXX) Indicates sand filled module location and weight of sand in pounds for each module. Module spacing is based on the greater diameter of the module.
2. All sand weights are nominal.
3. Temporary crash cushion arrays shall not encroach on the traveled way.
4. Place the top of Type R marker panel 1" below the module lid.
5. Refer to Standard Plan A73B for marker details.
6. Approach speeds indicated conform to NCHRP 350 Report criteria.
7. Use of pallets is optional.

STATE OF CALIFORNIA
DEPARTMENT OF TRANSPORTATION

TEMPORARY CRASH CUSHION, SAND FILLED (UNIDIRECTIONAL)

NO SCALE

RSP T1A DATED JUNE 6, 2008 SUPERSEDES STANDARD PLAN T1A
DATED MAY 1, 2006 - PAGE 211 OF THE STANDARD PLANS BOOK DATED MAY 2006.

REVISED STANDARD PLAN RSP T1A

2006 REVISED STANDARD PLAN RSP T1A

DIST	COUNTY	ROUTE	POST MILES TOTAL PROJECT	SHEET NO.	TOTAL SHEETS
04	Son	1	27.2	30	59

Randell D. Hiatt
REGISTERED CIVIL ENGINEER

June 6, 2008
PLANS APPROVAL DATE

REGISTERED PROFESSIONAL ENGINEER
Randell D. Hiatt
No. C50200
Exp. 6-30-09
CIVIL
STATE OF CALIFORNIA

The State of California or its officers or agents shall not be responsible for the accuracy or completeness of electronic copies of this plan sheet.

To accompany plans dated 7-12-10

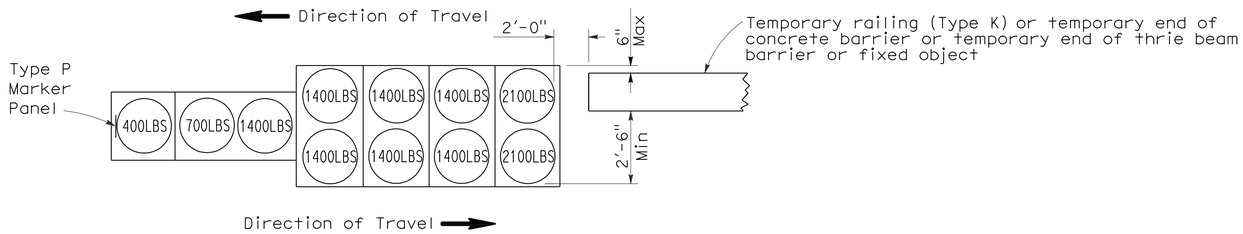

ARRAY 'TB11'

Approach speed less than 45 mph

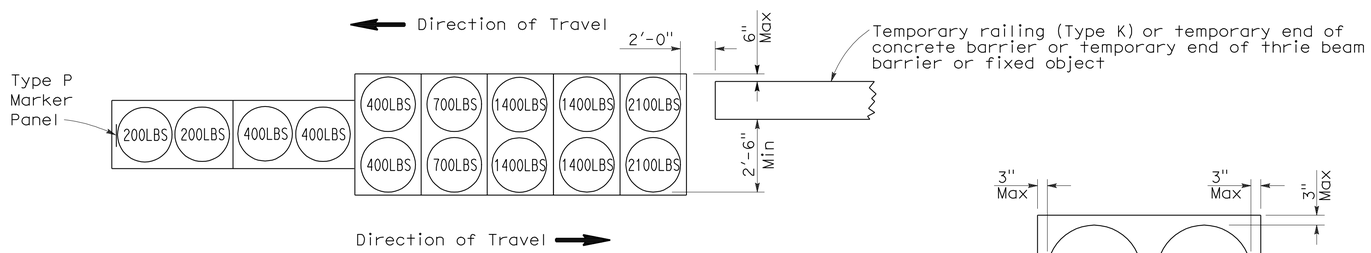

ARRAY 'TB14'

Approach speed 45 mph or more

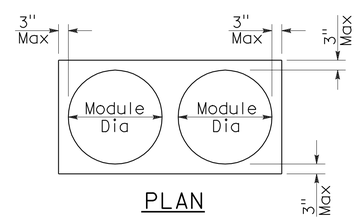

PLAN

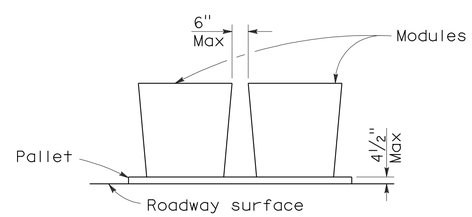

ELEVATION

CRASH CUSHION PALLET DETAIL

See Note 7

NOTES:

1. (XXX) Indicates sand filled module location and weight of sand in pounds for each module. Module spacing is based on the greater diameter of the module.
2. All sand weights are nominal.
3. Temporary crash cushion arrays shall not encroach on the traveled way.
4. Place the Type P marker panel so that the bottom of the panel rests upon the pallet.
5. Refer to Standard Plan A73B for marker details.
6. Approach speeds indicated conform to NCHRP 350 Report criteria.
7. Use of pallets is optional.

STATE OF CALIFORNIA
DEPARTMENT OF TRANSPORTATION

TEMPORARY CRASH CUSHION, SAND FILLED (BIDIRECTIONAL)

NO SCALE

RSP T1B DATED JUNE 6, 2008 SUPERSEDES STANDARD PLAN T1B
DATED MAY 1, 2006 - PAGE 212 OF THE STANDARD PLANS BOOK DATED MAY 2006.

REVISED STANDARD PLAN RSP T1B

2006 REVISED STANDARD PLAN RSP T1B

5-15-08

DIST	COUNTY	ROUTE	POST MILES TOTAL PROJECT	SHEET NO.	TOTAL SHEETS
04	Son	1	27.2	31	59

Randell D. Hiatt
REGISTERED CIVIL ENGINEER

June 6, 2008
PLANS APPROVAL DATE

REGISTERED PROFESSIONAL ENGINEER
Randell D. Hiatt
No. C50200
Exp. 6-30-09
CIVIL
STATE OF CALIFORNIA

The State of California or its officers or agents shall not be responsible for the accuracy or completeness of electronic copies of this plan sheet.

To accompany plans dated 7-12-10

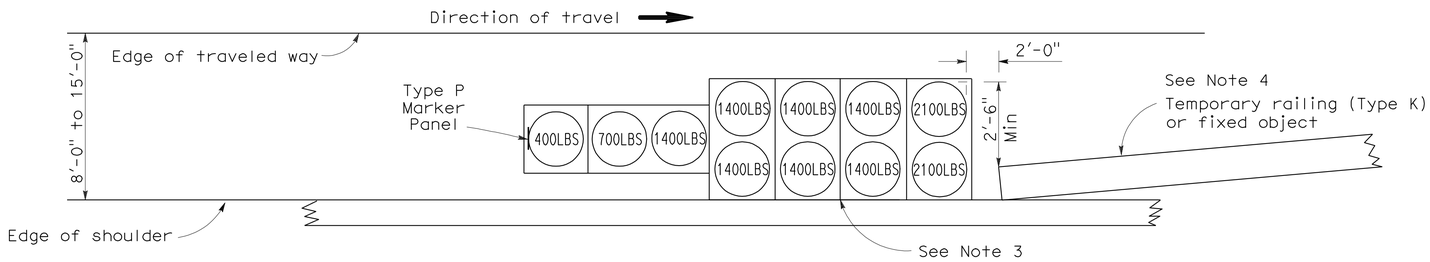

ARRAY 'TS11'

Approach speed less than 45 mph
See Note 9

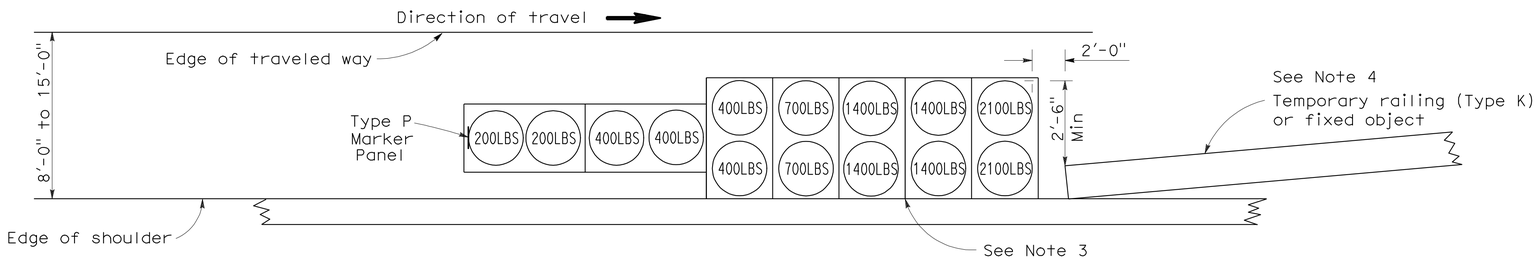

ARRAY 'TS14'

Approach speed 45 mph or more
See Note 9

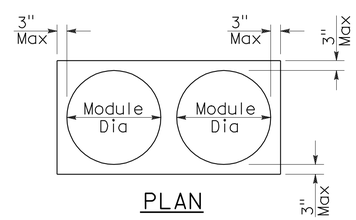

PLAN

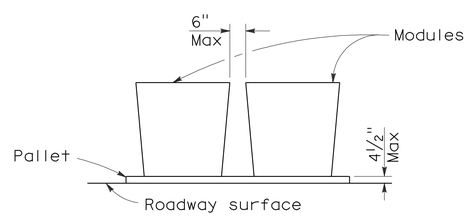

ELEVATION

CRASH CUSHION PALLET DETAIL

See Note 11

NOTES:

1. (XXX) Indicates sand filled module location and weight of sand in pounds for each module. Module spacing is based on the greater diameter of the module.
2. All sand weights are nominal.
3. The temporary crash cushion arrays shown on this plan shall be used only in locations where there will be traffic on one side of the temporary crash cushion array.
4. If the fixed object or approach end of the temporary railing is less than 15'-0" from the edge of traveled way, a temporary crash cushion is required in a construction or work zone.
5. Temporary crash cushion arrays shall not encroach on the traveled way.
6. Arrays for median shoulders shall conform to details shown on this plan for outside shoulders.
7. Place the Type P marker panel so that the bottom of the panel rests upon the pallet and faces traffic.
8. Refer to Standard Plan A73B for marker details.
9. For shoulder widths less than 8'-0", appropriate approved crash cushion protection, other than sand filled modules, shall be provided at fixed objects and at approach ends of temporary railing. The specific type of crash cushion shall be as shown on the project plans or as specified in the Special Provisions, or if not shown on the project plans or specified in the Special Provisions, shall be as approved by the Engineer.
10. Approach speeds indicated conform to NCHRP 350 Report criteria.
11. Use of pallets is optional.

STATE OF CALIFORNIA
DEPARTMENT OF TRANSPORTATION

TEMPORARY CRASH CUSHION, SAND FILLED (SHOULDER INSTALLATIONS)

NO SCALE

RSP T2 DATED JUNE 6, 2008 SUPERSEDES STANDARD PLAN T2
DATED MAY 1, 2006 - PAGE 213 OF THE STANDARD PLANS BOOK DATED MAY 2006.

REVISED STANDARD PLAN RSP T2

2006 REVISED STANDARD PLAN RSP T2

5-15-08

DIST	COUNTY	ROUTE	POST MILES TOTAL PROJECT	SHEET NO.	TOTAL SHEETS
04	Son	1	27.2	32	59

REGISTERED CIVIL ENGINEER

November 17, 2006
PLANS APPROVAL DATE

REGISTERED PROFESSIONAL ENGINEER — Greg W. Edwards — No. C36386 — Exp. 6-30-08 — CIVIL — STATE OF CALIFORNIA

The State of California or its officers or agents shall not be responsible for the accuracy or completeness of electronic copies of this plan sheet.

To accompany plans dated 7-12-10

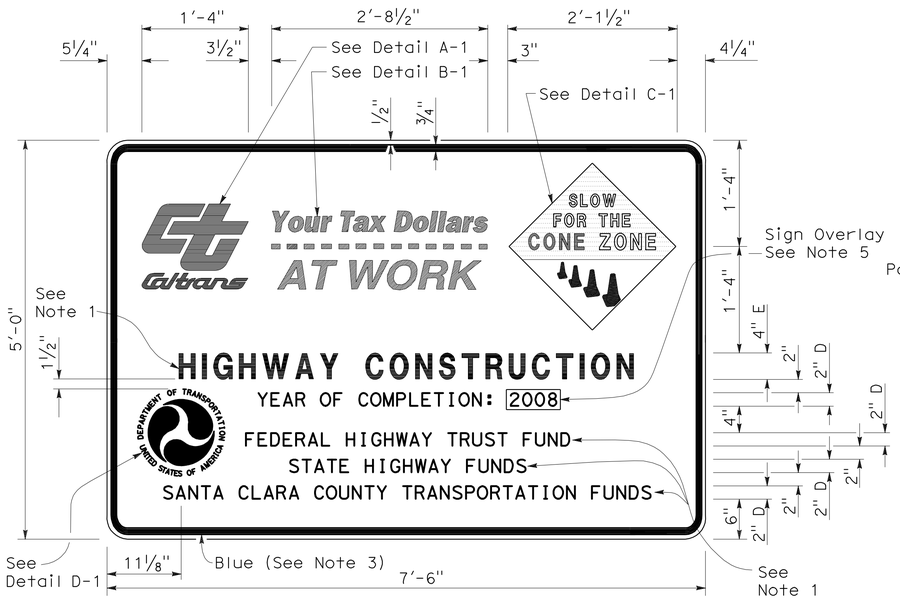

TYPE 1

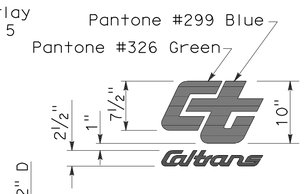

DETAIL A-1

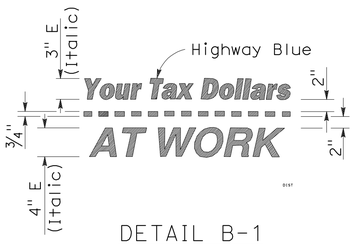

DETAIL B-1
(See Note 3)

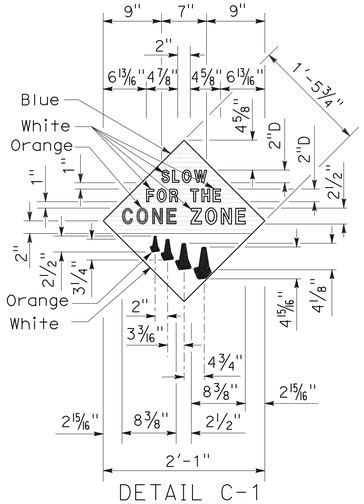

DETAIL C-1
(See Note 4)

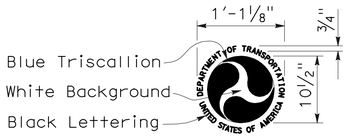

DETAIL D-1
(See Note 6)

NOTES:

1. The sign messages shown for type of project and fund types are examples only. See the Special Provisions for the applicable type of project and fund type messages to be used.
2. Except as otherwise shown, the legend of sign shall be black on a white background (non-reflective).
3. The border of the signs and details "B-1" and "B-2" shall be blue (non-reflective).
4. The diamond in details "C-1" and "C-2" shall be blue for the background of message, " SLOW FOR THE CONE ZONE", and white background for the orange cones. The color and type of font for the "SLOW FOR THE CONE ZONE" message shall be: "SLOW" white D; "FOR THE" white D; "CONE" orange Arial font; "ZONE" white Arial font.
5. Year of completion of project construction shown on the overlay is an example only. See the Special Provisions.
6. Use when the Project involves Federal Highway Trust Fund.

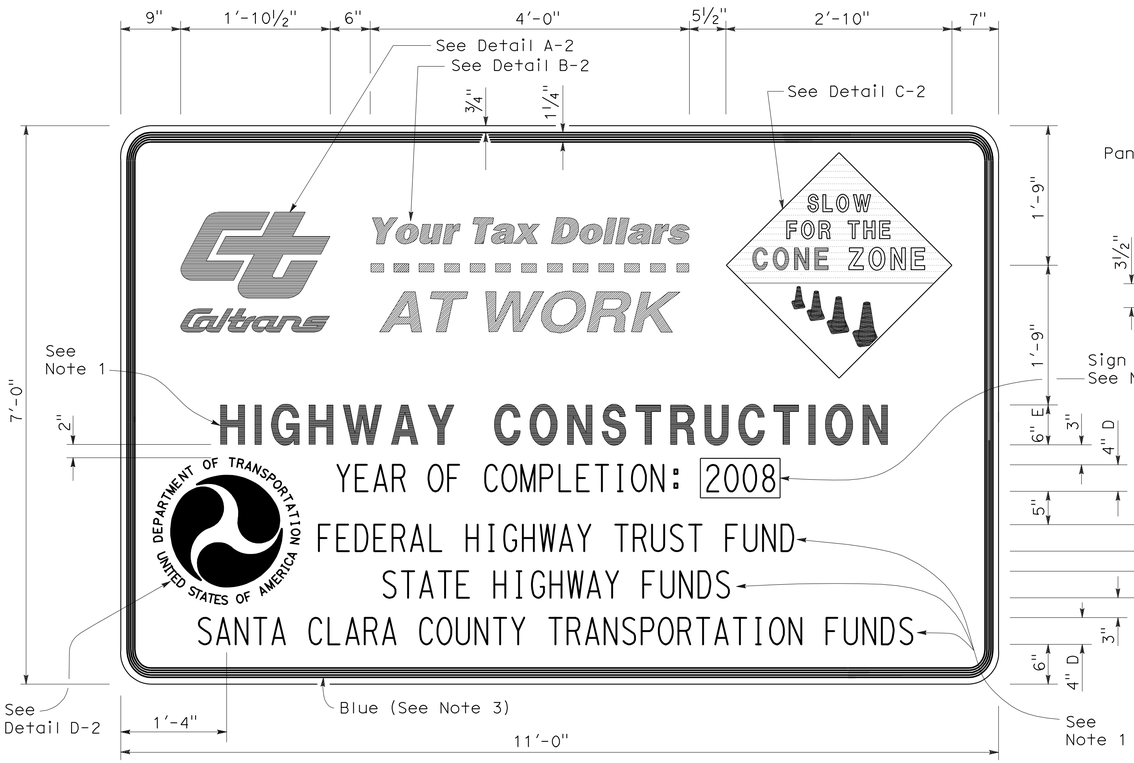

TYPE 2

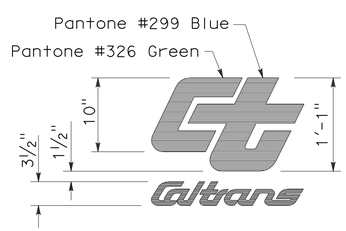

DETAIL A-2

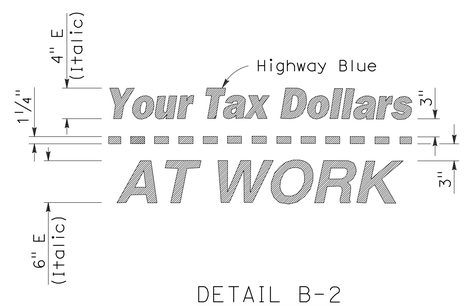

DETAIL B-2
(See Note 3)

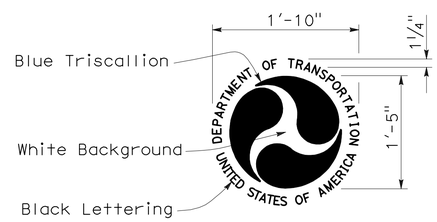

DETAIL D-2
(See Note 6)

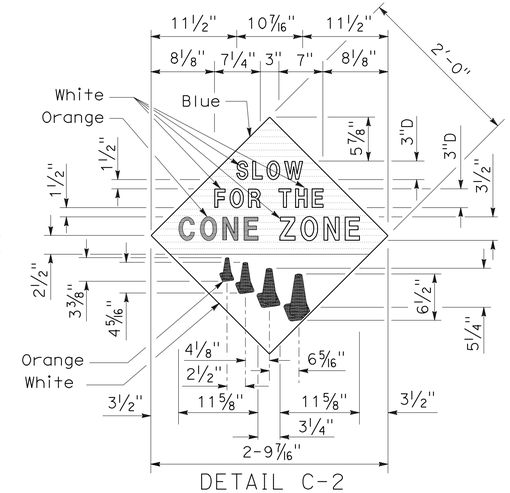

DETAIL C-2
(See Note 4)

STATE OF CALIFORNIA
DEPARTMENT OF TRANSPORTATION

CONSTRUCTION PROJECT FUNDING IDENTIFICATION SIGNS

NO SCALE

RSP T7 DATED NOVEMBER 17, 2006 SUPERSEDES STANDARD PLAN T7
DATED MAY 1, 2006 - PAGE 217 OF THE STANDARD PLANS BOOK DATED MAY 2006.

REVISED STANDARD PLAN RSP T7

2006 REVISED STANDARD PLAN RSP T7

9-7-06

DIST	COUNTY	ROUTE	POST MILES TOTAL PROJECT	SHEET NO.	TOTAL SHEETS
04	Son	1	27.2	33	59

LICENSED LANDSCAPE ARCHITECT

April 3, 2009
PLANS APPROVAL DATE

The State of California or its officers or agents shall not be responsible for the accuracy or completeness of electronic copies of this plan sheet.

LICENSED LANDSCAPE ARCHITECT — Robert B. Schott — Signature — 11-30-10 Renewal Date — 2-25-09 Date — STATE OF CALIFORNIA

To accompany plans dated 7-12-10

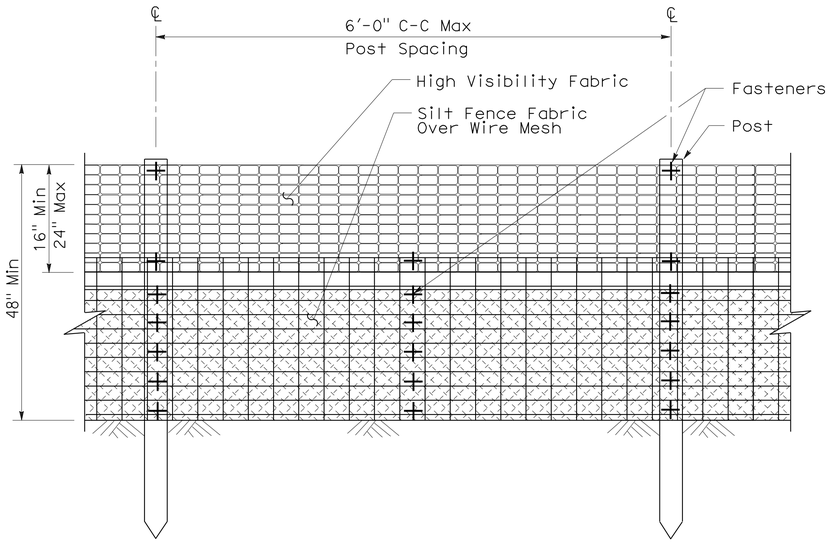

ELEVATION

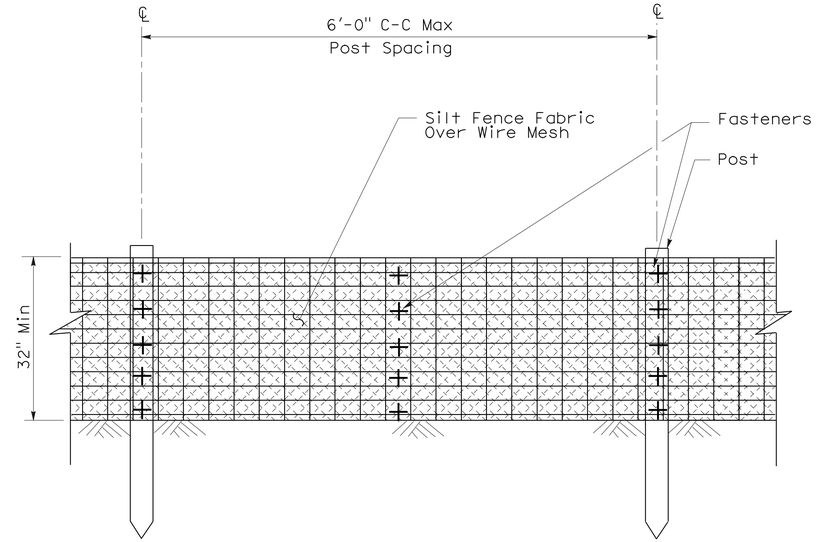

ELEVATION

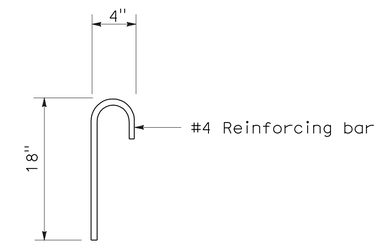

ANCHOR

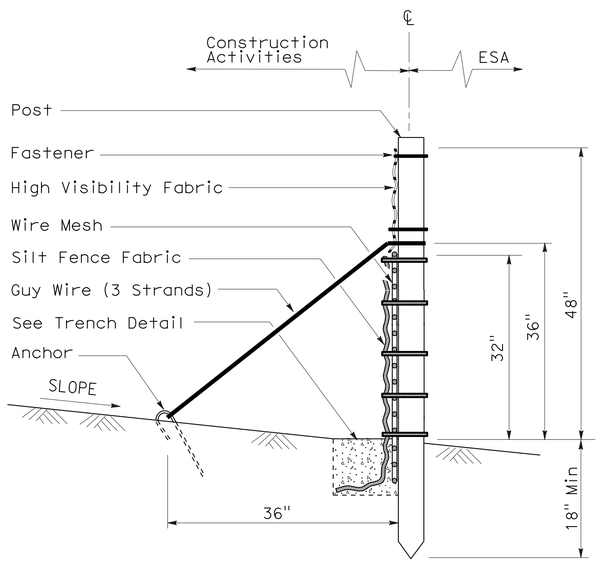

SECTION

TEMPORARY REINFORCED SILT FENCE (TYPE 1)

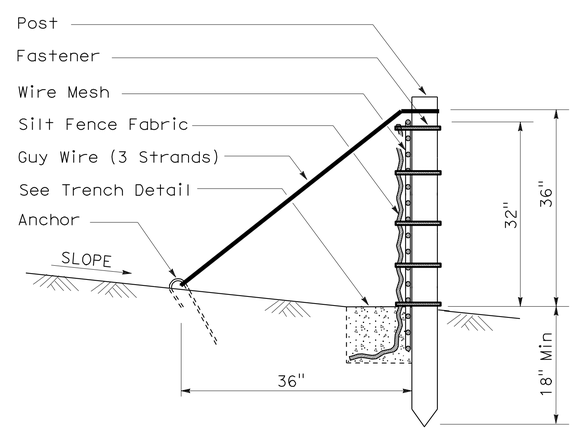

SECTION

TEMPORARY REINFORCED SILT FENCE (TYPE 2)

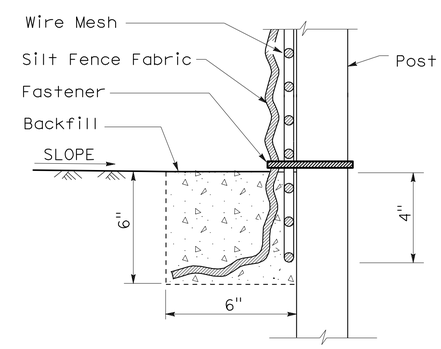

SECTION

TRENCH DETAIL

STATE OF CALIFORNIA
DEPARTMENT OF TRANSPORTATION

TEMPORARY WATER POLLUTION CONTROL DETAILS (TEMPORARY REINFORCED SILT FENCE)

NO SCALE

NSP T60 DATED APRIL 3, 2009 SUPPLEMENTS
THE STANDARD PLANS BOOK DATED MAY 2006.

NEW STANDARD PLAN NSP T60

2006 NEW STANDARD PLAN NSP T60

1-7-09

DIST	COUNTY	ROUTE	POST MILES TOTAL PROJECT	SHEET NO.	TOTAL SHEETS
04	Son	1	27.2	34	59

LICENSED LANDSCAPE ARCHITECT

August 15, 2008
PLANS Approval DATE

The State of California or its officers or agents shall not be responsible for the accuracy or completeness of electronic copies of this plan sheet.

LICENSED LANDSCAPE ARCHITECT Robert B. Schott 3625 Signature 11-04-08 Renewal Date 08-11-08 Date STATE OF CALIFORNIA

To accompany plans dated 7-12-10

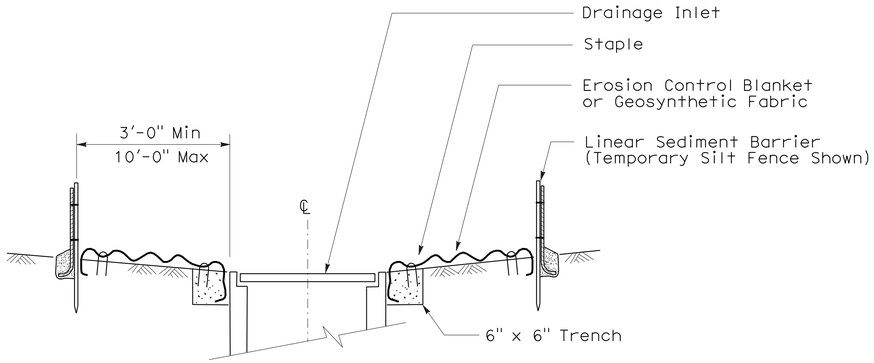

SECTION A-A

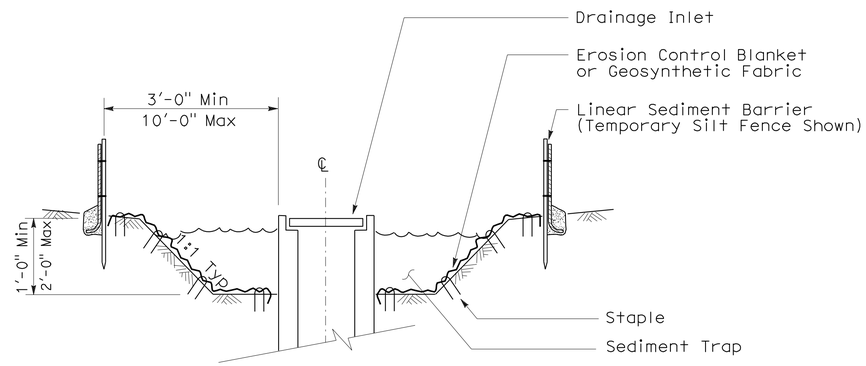

SECTION B-B

NOTES:

1. See Standard Plan T51 for Temporary Silt Fence.
2. Dimensions may vary to fit field conditions.

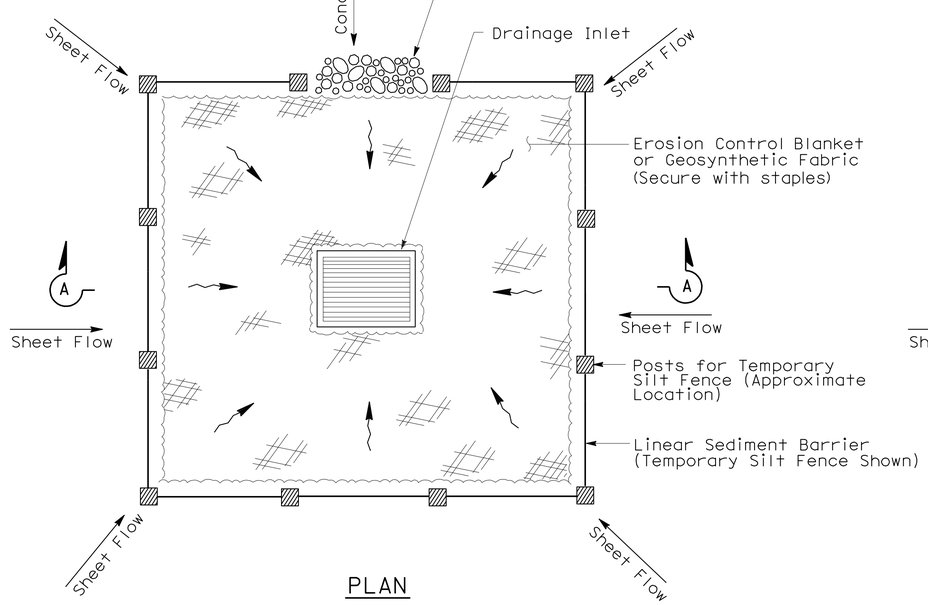

PLAN

TEMPORARY DRAINAGE INLET PROTECTION (TYPE 1)

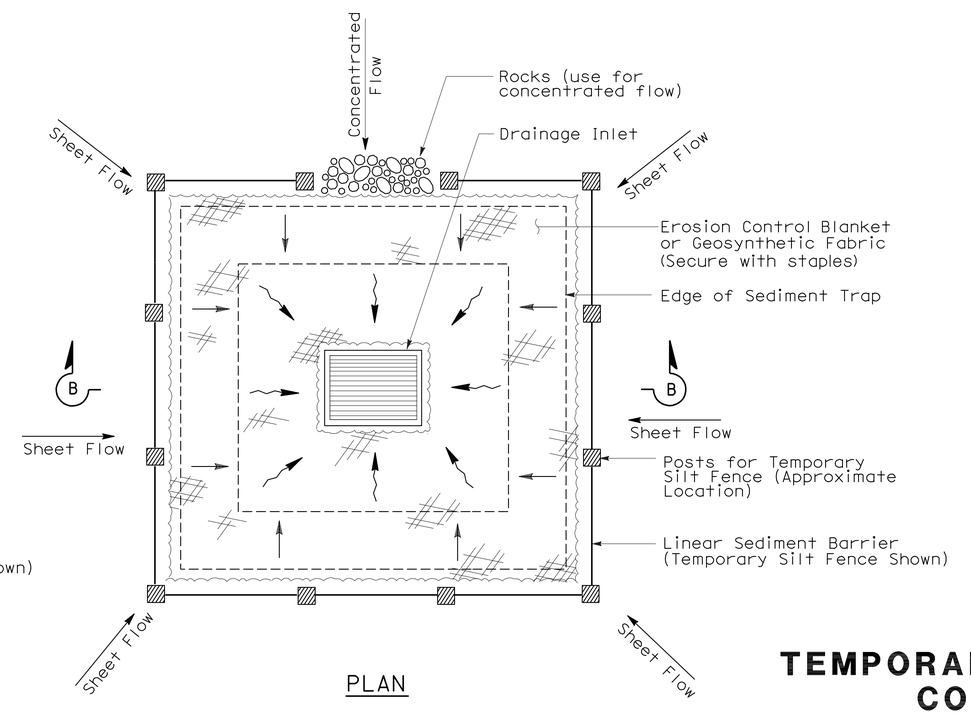

PLAN

TEMPORARY DRAINAGE INLET PROTECTION (TYPE 2) (EXCAVATED SEDIMENT TRAP)

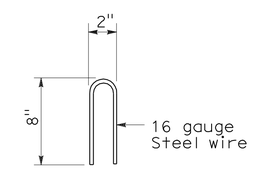

STAPLE DETAIL

STATE OF CALIFORNIA
DEPARTMENT OF TRANSPORTATION

TEMPORARY WATER POLLUTION CONTROL DETAILS (TEMPORARY DRAINAGE INLET PROTECTION)

NO SCALE

NSP T61 DATED AUGUST 15, 2008 SUPPLEMENTS THE STANDARD PLANS BOOK DATED MAY 2006.

NEW STANDARD PLAN NSP T61

2006 NEW STANDARD PLAN NSP T61

7-11-08

DIST	COUNTY	ROUTE	POST MILES TOTAL PROJECT	SHEET NO.	TOTAL SHEETS
04	Son	1	27.2	35	59

LICENSED LANDSCAPE ARCHITECT

August 15, 2008
PLANS APPROVAL DATE

LICENSED LANDSCAPE ARCHITECT — Robert B. Schott — Signature — 11-04-08 Renewal Date — 08-11-08 Date — STATE OF CALIFORNIA

The State of California or its officers or agents shall not be responsible for the accuracy or completeness of electronic copies of this plan sheet.

To accompany plans dated 7-12-10

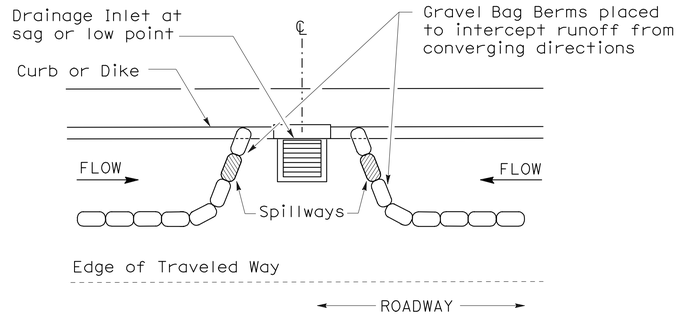

PLAN

CONFIGURATION FOR SAG POINT INLET (GRAVEL BAG BERM)

GRAVEL BAG BERM (TYPE 3A) SPACING TABLE

SLOPE OF ROADWAY (PERCENT)	1 to 3.9	4 to 5.9	6 to 7.9	8 to 10	10+
INTERVAL BETWEEN BERM	100′	75′	50′	25′	12′

For slope of less than 1%, install barriers only if erosion/sediment is prevalent

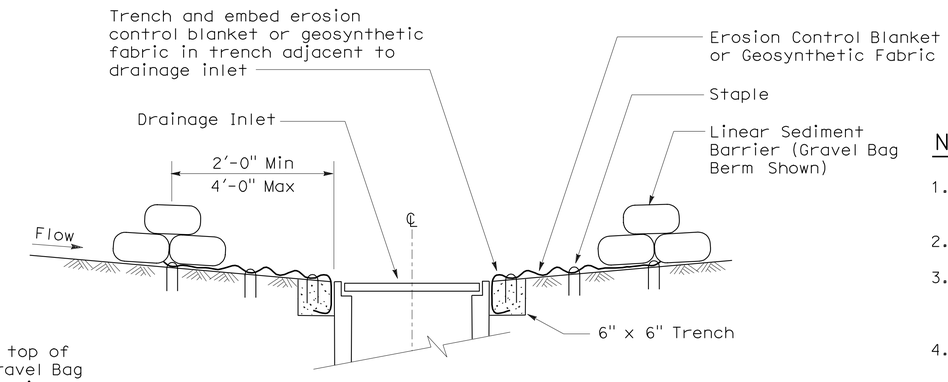

SECTION A-A

NOTES:

1. Place safety cones adjacent to drainage inlet protection.
2. Dimensions may vary to fit field conditions.
3. Install a minimum of 3 gravel bag berms upstream of each drainage inlet to be protected.
4. Position erosion control blanket or geosynthetic fabric at edge of concrete apron and secure in trench.
5. Erosion control blanket or geosynthetic fabric is not required if the area adjacent to the drainage inlet is vegetated or paved.

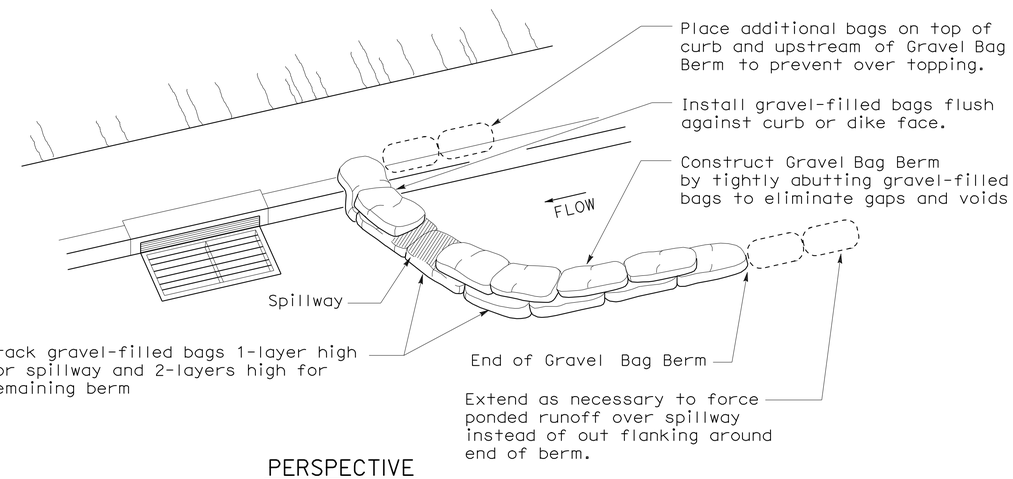

PERSPECTIVE

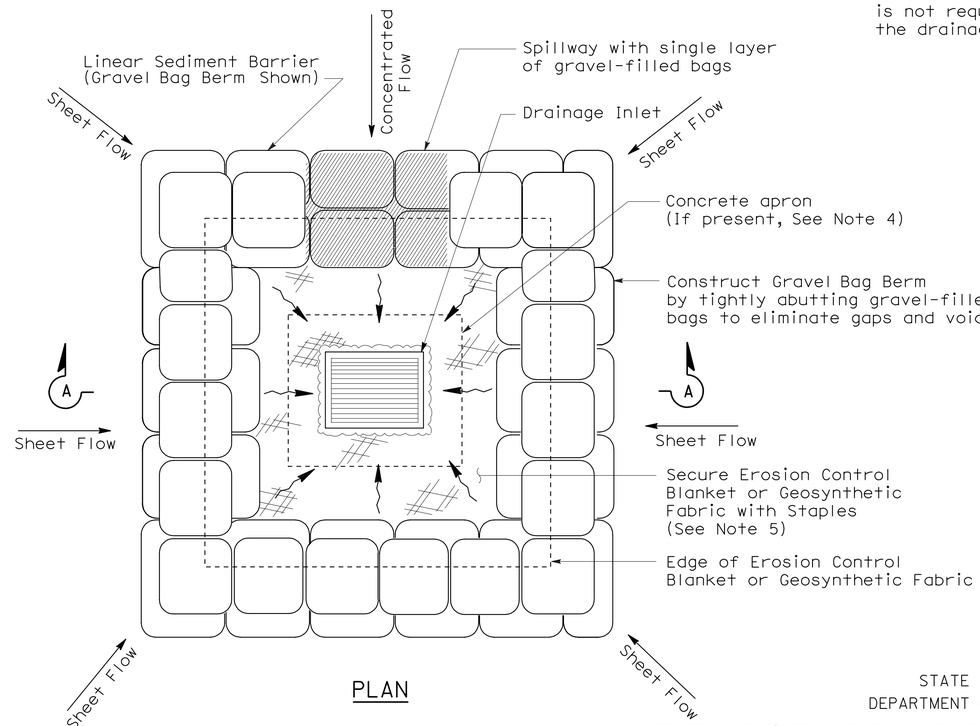

PLAN

TEMPORARY DRAINAGE INLET PROTECTION (TYPE 3B)

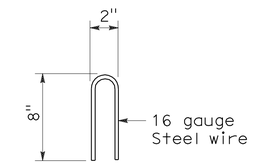

STAPLE DETAIL

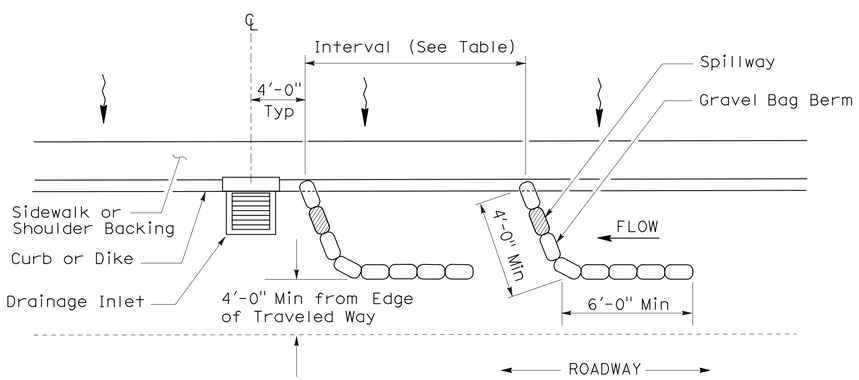

PLAN

TEMPORARY DRAINAGE INLET PROTECTION (TYPE 3A) (GRAVEL BAG BERM)

STATE OF CALIFORNIA
DEPARTMENT OF TRANSPORTATION

TEMPORARY WATER POLLUTION CONTROL DETAILS (TEMPORARY DRAINAGE INLET PROTECTION)

NO SCALE

NSP T62 DATED AUGUST 15, 2008 SUPPLEMENTS THE STANDARD PLANS BOOK DATED MAY 2006.

NEW STANDARD PLAN NSP T62

2006 NEW STANDARD PLAN NSP T62

7-11-08

DIST	COUNTY	ROUTE	POST MILES TOTAL PROJECT	SHEET NO.	TOTAL SHEETS
04	Son	1	27.2	36	59

Robert B Schott
LICENSED LANDSCAPE ARCHITECT

August 15, 2008
PLANS APPROVAL DATE

LICENSED LANDSCAPE ARCHITECT Robert B. Schott 3625 Signature 11-04-08 Renewal Date 08-11-08 Date STATE OF CALIFORNIA

The State of California or its officers or agents shall not be responsible for the accuracy or completeness of electronic copies of this plan sheet.

To accompany plans dated 7-12-10

FLEXIBLE SEDIMENT BARRIER SPACING TABLE

SLOPE OF ROADWAY (PERCENT)	0 to 0.9	1 to 1.9	2 to 2.9	3 to 4	5+
INTERVAL BETWEEN BARRIERS	50′	35′	30′	25′	20′
ANGLE FROM FACE OF CURB	70°	70°	70°	45°	45°
SUGGESTED BARRIER LENGTH	6′	6′	6′	6′	6′

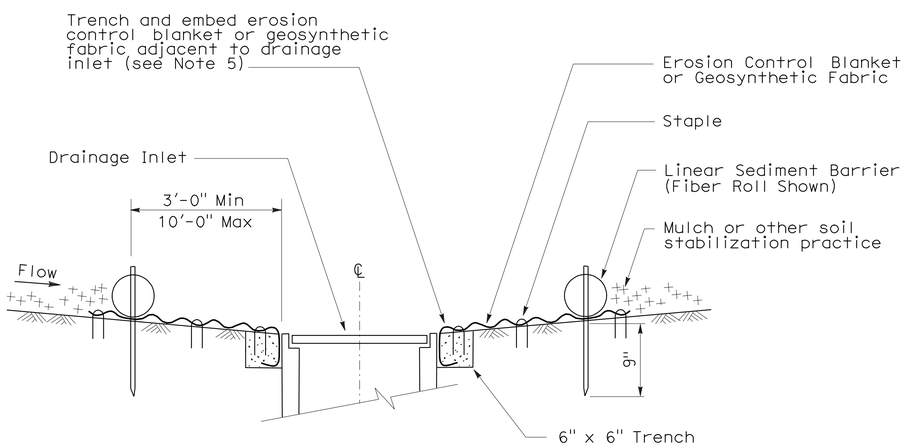

SECTION A-A

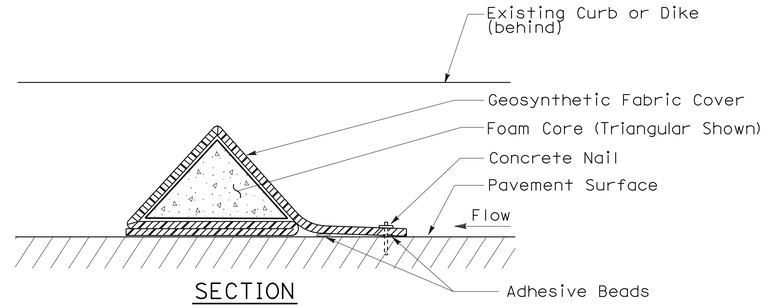

SECTION

FLEXIBLE SEDIMENT BARRIER DETAIL (FOAM BARRIER SHOWN)

NOTES:

1. See Standard Plan T51 for Temporary Silt Fence.
2. Dimensions may vary to fit field conditions.
3. Install a minimum of 3 flexible sediment barriers upstream of each drainage inlet to be protected.
4. Position erosion control blanket or geosynthetic fabric at edge of concrete apron and secure in trench.
5. Erosion control blanket or geosynthetic fabric is not required if the area adjacent to the drainage inlet is vegetated.

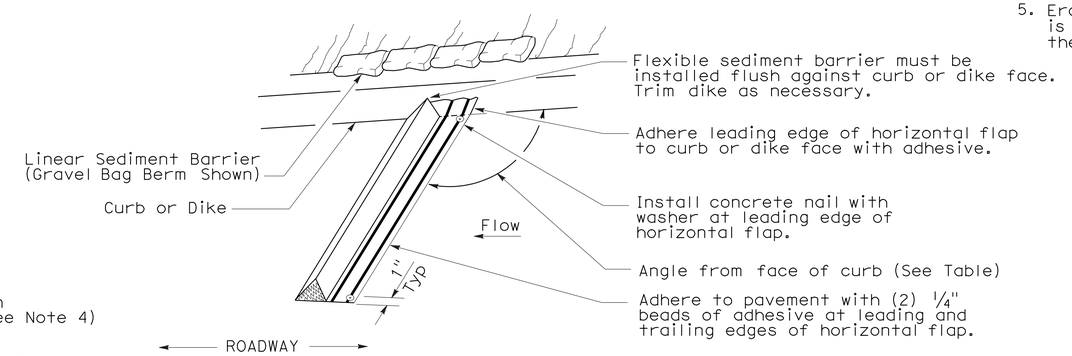

PERSPECTIVE

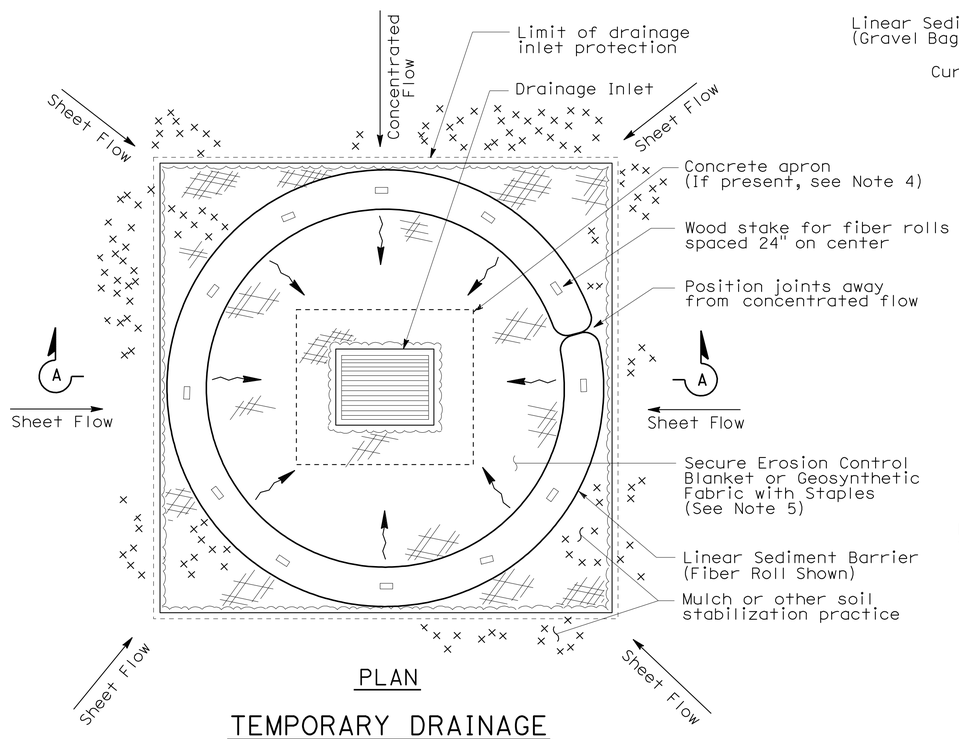

PLAN

TEMPORARY DRAINAGE INLET PROTECTION (TYPE 4A)

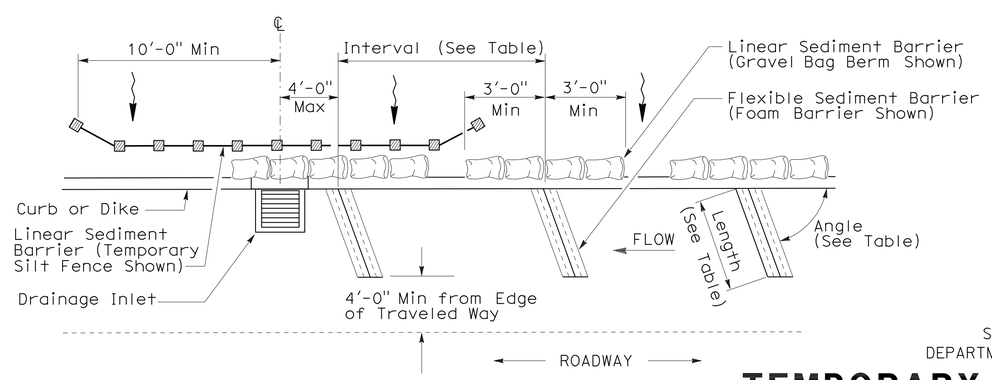

PLAN

TEMPORARY DRAINAGE INLET PROTECTION (TYPE 4B) FLEXIBLE SEDIMENT BARRIER

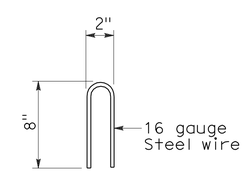

STAPLE DETAIL

STATE OF CALIFORNIA
DEPARTMENT OF TRANSPORTATION

TEMPORARY WATER POLLUTION CONTROL DETAILS (TEMPORARY DRAINAGE INLET PROTECTION)

NO SCALE

NSP T63 DATED AUGUST 15, 2008 SUPPLEMENTS THE STANDARD PLANS BOOK DATED MAY 2006.

NEW STANDARD PLAN NSP T63

2006 NEW STANDARD PLAN NSP T63

DIST	COUNTY	ROUTE	POST MILES TOTAL PROJECT	SHEET NO.	TOTAL SHEETS
04	Son	1	27.2	37	59

LICENSED LANDSCAPE ARCHITECT

August 15, 2008
PLANS APPROVAL DATE

The State of California or its officers or agents shall not be responsible for the accuracy or completeness of electronic copies of this plan sheet.

LICENSED LANDSCAPE ARCHITECT — Robert B. Schott — Signature — 11-04-08 Renewal Date — 08-11-08 Date — STATE OF CALIFORNIA

To accompany plans dated 7-12-10

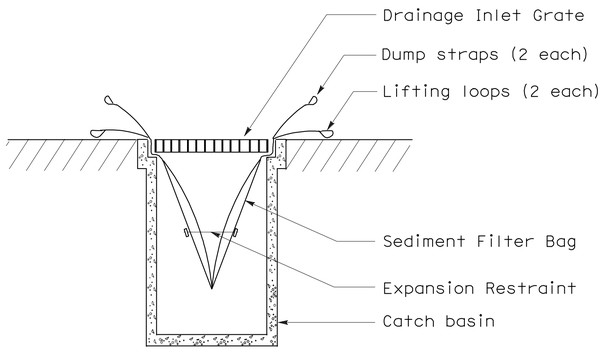

SECTION B-B

SEDIMENT FILTER BAG DETAIL

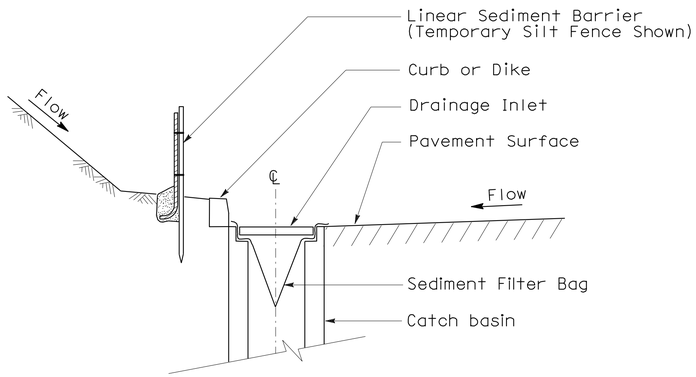

SECTION A-A

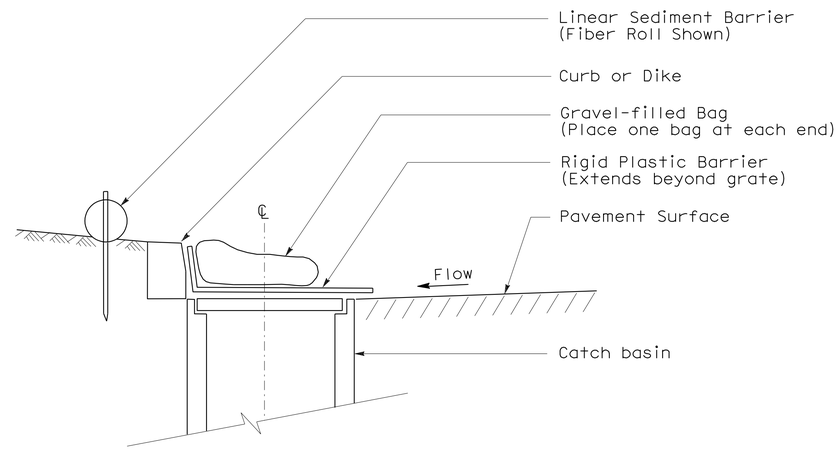

SECTION

TEMPORARY DRAINAGE INLET PROTECTION (TYPE 6A) (CATCH BASIN WITH GRATE)

NOTES:

1. See Standard Plan T51 for Temporary Silt Fence.
2. Dimensions may vary to fit field conditions.

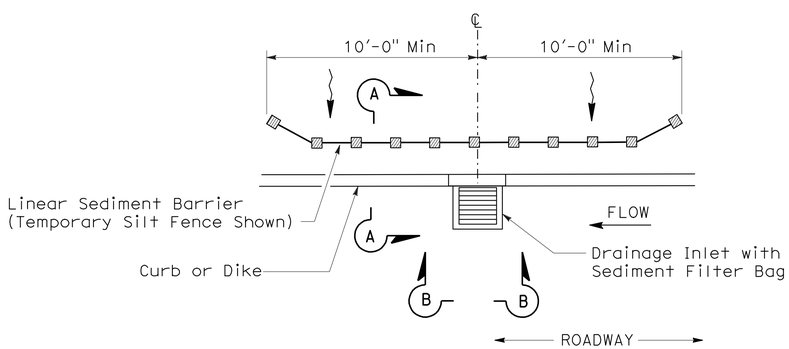

PLAN

TEMPORARY DRAINAGE INLET PROTECTION (TYPE 5) (SEDIMENT FILTER BAG)

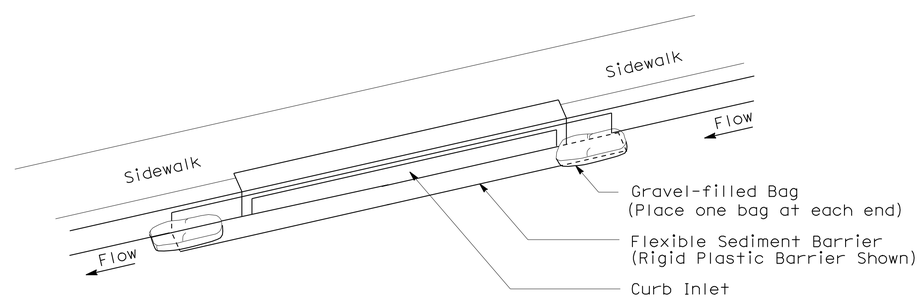

PERSPECTIVE

TEMPORARY DRAINAGE INLET PROTECTION (TYPE 6B) (CURB INLET WITHOUT GRATE)

STATE OF CALIFORNIA
DEPARTMENT OF TRANSPORTATION

TEMPORARY WATER POLLUTION CONTROL DETAILS (TEMPORARY DRAINAGE INLET PROTECTION)

NO SCALE

NSP T64 DATED AUGUST 15, 2008 SUPPLEMENTS THE STANDARD PLANS BOOK DATED MAY 2006.

NEW STANDARD PLAN NSP T64

2006 NEW STANDARD PLAN NSP T64

7-11-08

DIST	COUNTY	ROUTE	POST MILES TOTAL PROJECT	SHEET NO.	TOTAL SHEETS
04	Son	1	27.2	38	59

REGISTERED ELECTRICAL ENGINEER

October 5, 2007
PLANS APPROVAL DATE

REGISTERED PROFESSIONAL ENGINEER
Jeffery G. McRae
No. E14512
Exp. 6-30-08
ELECTRICAL
STATE OF CALIFORNIA

The State of California or its officers or agents shall not be responsible for the accuracy or completeness of electronic copies of this plan sheet.

To accompany plans dated 7-12-10

ELECTROLIERS

STANDARD TYPES
15, 15D
15 STRUCTURE
21, 21D STRUCTURE
30
31
32
35
36-20A

High mast light pole

Double Arm lighting standard

Existing electrolier

Electrolier foundation (Future installation)

NOTES:

1. Luminaires shall be 310 W HPS when installed on Type 21, 21D, 30, 31, 32, 35 and 36-20A Standards, unless otherwise specified. Luminaires shall be 200 W HPS when installed on other type standards or poles, unless otherwise specified.
2. Luminaires shall be the cutoff type, ANSI Type III medium cutoff lighting distribution, unless otherwise specified.
3. Variations noted adjacent to symbol on project plans.

Electrolier (see project notes or project plans)

Luminaire on wood pole

STANDARD NOTES:

- AB — Abandon. If applied to conduit, remove conductors.
- BC — Install pull box in existing conduit run.
- BP — Pedestrian barricade, type as indicated on plan.
- CB — Install conduit into existing pull box.
- CC — Connect new and existing conduit. Remove existing conductors and install conductors as indicated.
- CF — Conduit to remain for future use. Remove conductors. Install pull wire or rope.
- DH — Detector handhole.
- FA — Foundation to be abandoned.
- IS — Install sign on signal mast arm.
- NS — No slip base on standard.
- PEC — Photoelectric control.
- PEU — Photoelectric unit.
- RC — Equipment or material to be removed and become the property of the Contractor.
- RE — Remove electrolier, fuses and ballast. Tape ends of conductors.
- RL — Relocate equipment.
- RR — Remove and reuse equipment.
- RS — Remove and salvage equipment.
- SC — Splice new to existing conductors.
- SD — Service disconnect.
- SF — Standard to remain for future use. Remove luminaire, pole conductors, fuses and ballast.
- TSP — Telephone service point.

ABBREVIATIONS AND EQUIPMENT DESIGNATIONS

PROPOSED	EXISTING	
BBS	bbs	Battery backup system
BC	bc	Bolt circle
C	C	Conduit
CCTV	cctv	Closed circuit television
CKT	ckt	Circuit
CMS	cms	Changeable message sign
DLC	dlc	Loop detector lead-in cable
EMS	ems	Extinguishable message sign
EVC	evc	Emergency vehicle cable
EVD	evd	Emergency vehicle detector
FB	fb	Flashing beacon
FBCA	fbca	Flashing beacon control assembly
FBS	fbs	Flashing beacon with slip base
FO	fo	Fiber optic
G	G	Ground (Equipment Grounding Conductor)
GFCI	GFCI	Ground fault circuit interrupt
HAR	har	Highway advisory radio
HEX	hex	Hexagonal
HPS	hps	High pressure sodium
IISNS	iisns	Internally illuminated street name sign
ISL	isl	Induction sign lighting
LED	led	Light emitting diode
LMA	lma	Luminaire mast arm
LPS	lps	Low pressure sodium
LTG	ltg	Lighting
LUM	lum	Luminaire
MAT	mat	Mast arm mounting vehicle signal faces, top attachment
MAS	mas	Mast arm mounting vehicle signal faces, side attachment
MAS-4A	mas-4A	Mast arm mounting vehicle signal faces, side attachment - 4 signal section
MAS-4B	mas-4B	
MAS-4C	mas-4C	
MAS-5A	mas-5A	Mast arm mounting vehicle signal faces, side attachment - 5 signal section
MAS-5B	mas-5B	
MC	mc	Mercury contactor
M/M	m/m	Multiple to multiple transformer
MT	mt	Conduit with pull wire or rope only
MTG	mtg	Mounting
	mv	Mercury vapor lighting fixture
N	N	Neutral (Grounded Conductor)
NC	NC	Normally closed
NO	NO	Normally open
PB	pb	Pull box
PEC	pec	Photoelectric control (Type I, II, III, IV or V as shown)
PED	ped	Pedestrian
PEU	peu	Photoelectric unit
PPB	ppb	Pedestrian push button
RL		Relocated equipment
RM	rm	Ramp metering
SB	sb	Slip base
SIC	sic	Signal interconnect cable
SIG	sig	Signal
SMA	sma	Signal mast arm
SNS	sns	Street name sign
SP	sp	Service point
TDC	tdc	Telephone demarcation cabinet
TMS	tms	Traffic monitoring station
TOS	tos	Traffic Operations System
VEH	veh	Vehicle
XFMR	xfmr	Transformer
COMM	comm	Communication
RWIS	rwis	Roadway weather information system

SOFFIT AND WALL MOUNTED LUMINAIRES

Pendant, 70 W HPS unless otherwise specified.

Flush, 70 W HPS unless otherwise specified.

Wall surface, 70 W HPS unless otherwise specified.

Existing soffit or wall luminaire to remain unmodified.

Existing soffit or wall luminaire to be modified as specified.

NOTE:

Arrow indicates "street side" of luminaire.

STATE OF CALIFORNIA
DEPARTMENT OF TRANSPORTATION

ELECTRICAL SYSTEMS (SYMBOLS AND ABBREVIATIONS)

NO SCALE

RSP ES-1A DATED OCTOBER 5, 2007 SUPERSEDES STANDARD PLAN ES-1A
DATED MAY 1, 2006 - PAGE 400 OF THE STANDARD PLANS BOOK DATED MAY 2006.

REVISED STANDARD PLAN RSP ES-1A

2006 REVISED STANDARD PLAN RSP ES-1A

DIST	COUNTY	ROUTE	POST MILES TOTAL PROJECT	SHEET NO.	TOTAL SHEETS
04	Son	1	27.2	39	59

REGISTERED ELECTRICAL ENGINEER

October 5, 2007
PLANS APPROVAL DATE

REGISTERED PROFESSIONAL ENGINEER Jeffery G. McRae No. E14512 Exp. 6-30-08 ELECTRICAL STATE OF CALIFORNIA

The State of California or its officers or agents shall not be responsible for the accuracy or completeness of electronic copies of this plan sheet.

To accompany plans dated 7-12-10

CONDUIT

PROPOSED	EXISTING	
		Lighting Conduit, unless otherwise indicated or noted
		Traffic signal conduit
C	c	Communication conduit
T	t	Telephone conduit
F	f	Fire alarm conduit
FO	fo	Fiber optic conduit
		Conduit termination (RSP ES-9A C)
R	r	Conduit riser in/on structure or service pole

SERVICE EQUIPMENT

PROPOSED	EXISTING	
OH	oh	Overhead lines
U	U	Wood pole "U" indicates utility owned
		Pole guy with anchor
		Utility transformer - ground mounted
III		Service equipment enclosure type
		Service equipment enclosure door indicates front of enclosure
T	t	Telephone demarcation cabinet

POLE-MOUNTED SERVICE DESIGNATION

Type of installation

TYPE H SERVICE - 28'-10" ← Pole height above grade

ILLUMINATED OVERHEAD SIGN

PROPOSED	EXISTING	
		Overhead sign - Single post
		Overhead sign - Two post
		Overhead sign - Mounted on structure
		Overhead sign with electrolier

SIGNAL EQUIPMENT

PROPOSED	EXISTING	
		Pedestrian signal face
		Pedestrian push button post
		Pedestrian barricade
		Vehicle signal face (with backplate, 3-Section: red, yellow and green)
		Vehicle signal face with angle visors
PV	PV	Modifications of basic symbols: "L" indicates all non-arrow sections louvered "LG" indicates louvered green section only "PV" indicates 12" programmed visibility sections "8" indicates all 8" sections (only when specified)
		Type 15TS and Vehicle signal face
		Vehicle signal face with red, yellow and green left arrow sections
		Vehicle signal face with red and yellow sections and up green arrow
		Vehicle signal face (5 Section) with red, yellow and green sections and yellow and green right arrows
		Type 1 Standard and attached vehicle signal faces
		Standard with signal mast arm only and attached vehicle signal faces and internally illuminated street name sign
		Type 33 Standard, Left-turn vehicle signal face and sign
		Standard with luminaire and signal mast arms and attached vehicle signal faces
		Cantilever flashing beacon Type 9 Frame, with a sign unless otherwise specified or indicated
		Type 15-FBS Standard with two vehicle signal face sections with lens, backplate and visor with a sign
R	Y	Flashing beacon. One vehicle signal face section with lens, backplate and visor. "R" indicates red indication, "Y" indicates yellow indication
		Controller assembly. Door indicates front of cabinet

SIGNAL EQUIPMENT Cont

PROPOSED	EXISTING	
		Guard post
		Type 1 Standard with "Meter On" sign
		Emergency Vehicle detector

NOTES:

1. All signal sections shall be 12" unless shown otherwise.
2. Signal heads shall be provided with backplates unless shown otherwise.
3. Signal indication shall be LED.

STATE OF CALIFORNIA
DEPARTMENT OF TRANSPORTATION

ELECTRICAL SYSTEMS (SYMBOLS AND ABBREVIATIONS)

NO SCALE

RSP ES-1B DATED OCTOBER 5, 2007 SUPERCEDES STANDARD PLAN ES-1B DATED MAY 1, 2006 - PAGE 401 OF THE STANDARD PLANS BOOK DATED MAY 2006.

REVISED STANDARD PLAN RSP ES-1B

2006 REVISED STANDARD PLAN RSP ES-1B

7-10-07

DIST	COUNTY	ROUTE	POST MILES TOTAL PROJECT	SHEET NO.	TOTAL SHEETS
04	Son	1	27.2	40	59

REGISTERED ELECTRICAL ENGINEER

October 5, 2007
PLANS APPROVAL DATE

REGISTERED PROFESSIONAL ENGINEER Jeffery G. McRae No. E14512 Exp. 6-30-08 ELECTRICAL STATE OF CALIFORNIA

The State of California or its officers or agents shall not be responsible for the accuracy or completeness of electronic copies of this plan sheet.

To accompany plans dated 7-12-10

EQUIPMENT IDENTIFICATION

ILLUMINATED SIGN IDENTIFICATION NUMBER:

Sign No. 12345 — Sign number - Place on post or structure

10 ISL SCI 1.0

- 1.0 — Transformer rating (kVA)
- SCI — Lighting control type
- ISL — Number and type of fixtures

Do NOT place on standard or structure

ELECTROLIER OR EQUIPMENT IDENTIFICATION NUMBER:

12345 - 15'-0"

- 15'-0" — Mast arm length, if shown. Do not place on standard or structure.
- 12345 — Equipment number - Place on standard or structure. Existing equipment numbers are shown in parenthesis

CONDUIT AND CONDUCTOR IDENTIFICATION:

1½"C, 2#10, 15#14, 2 DLC

- 2#10, 15#14, 2 DLC — Number and size of conductors and cables
- 1½"C — Size of conduit in inches

Ø1, Ø2, Ø2P, etc.	Traffic phase identification for signal faces, detectors and phase diagrams
1 2 3	Project note numbers
A B C	Equipment description, installation or item numbers
1 2 3	Conduit run numbers

SIGNAL AND LIGHTING STANDARD (TYPICAL DESIGNATION):

19A - 3 - 100

- 100 — Wind velocity = 100 mph
- 3 — Case 3 arm loading
- 19A — Standard type
- Standard Plan sheet number
- Detail number or letter

MISCELLANEOUS EQUIPMENT

PROPOSED	EXISTING	
CMS	cms	Changeable message sign
		Closed circuit television camera
		Highway advisory radio pole and antenna
EMS	ems	Extinguishable message sign
M V	m v	Detection device M = Microwave sensor V = Video image sensor

WIRING DIAGRAM LEGEND

P	Pole
CB	Circuit breaker
A	Ampere
V	Volt
M	Metered
UM	Unmetered
NB	Neutral bus
GB	Ground bus
G	Equipment grounding conductor
N	Grounded conductor (Neutral)

- External conductor
- Conductor or bus
- Tie point
- Contactor coil
- Contactor, Contact NO
- Terminal blocks
- Contactor, Contact NC
- Enclosure bond
- Grounding electrode
- Circuit breaker
- Receptacle

PULL BOXES

PROPOSED EXISTING

Pull box-No. 5 unless otherwise indicated or noted.

3 — 9A(21)

Pull box-Additional designations or descriptions

3	= No. 3½ pull box
5	= No. 5 pull box
6	= No. 6 pull box
7	= No. 7 (Ceiling pull box)
8	= No. 8 (Pendant soffit pull box)
9	= No. 9 pull box
9A	= No. 9A pull box

(C) = Communications pull box
(E) = Pull box with extension
(S) = Sprinkler control pull box
(21) = Anchor bolts and conduit for future installation of Type 21 Standard
(T) = Traffic pull box

VEHICLE DETECTORS

5 J 9 U

- U = Upper
- L = Lower
- Slot number in input file
- Input file (I or J)
- Phase

PROPOSED EXISTING

	Type A detector loop. Outline of sawcut shown.
	Type B detector loop. Outline of sawcut shown.
	Type C detector loop. Outline of sawcut shown.
	Type D detector loop. Outline of sawcut shown.
	Type E detector loop. Outline of sawcut shown.
	Type Q detector loop. Outline of sawcut shown.
	Magnetic detector
DH dh	Detector handhole
	Microwave or video detection zone

STATE OF CALIFORNIA
DEPARTMENT OF TRANSPORTATION

ELECTRICAL SYSTEMS (SYMBOLS AND ABBREVIATIONS)

NO SCALE

RSP ES-1C DATED OCTOBER 5, 2007 SUPERCEDES STANDARD PLAN ES-1C DATED MAY 1, 2006 - PAGE 402 OF THE STANDARD PLANS BOOK DATED MAY 2006.

REVISED STANDARD PLAN RSP ES-1C

2006 REVISED STANDARD PLAN RSP ES-1C

7-10-07

DIST	COUNTY	ROUTE	POST MILES TOTAL PROJECT	SHEET NO.	TOTAL SHEETS
04	Son	1	27.2	41	59

REGISTERED ELECTRICAL ENGINEER

June 6, 2008
PLANS APPROVAL DATE

REGISTERED PROFESSIONAL ENGINEER
Jeffery G. McRae
No. E14512
Exp. 6-30-10
ELECTRICAL
STATE OF CALIFORNIA

The State of California or its officers or agents shall not be responsible for the accuracy or completeness of electronic copies of this plan sheet.

To accompany plans dated 7-12-10

VISORS

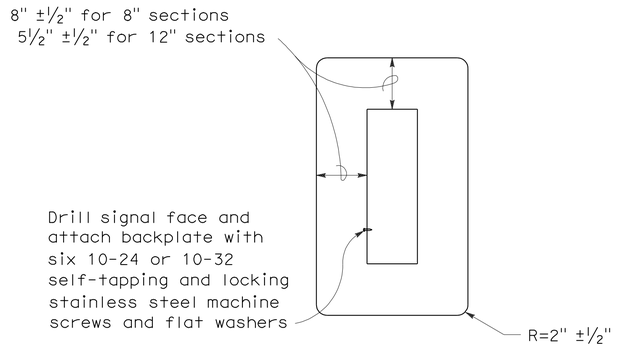

8" AND 12" SECTIONS

BACKPLATE

1/16" minimum thickness
3001-14 aluminum, or plastic when specified

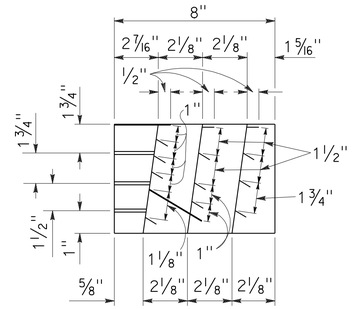

SECTION A-A

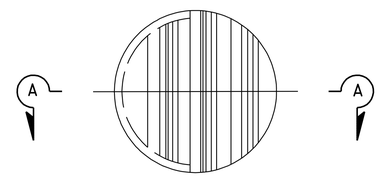

FRONT VIEW

DIRECTIONAL LOUVER

Directional louvers shall be oriented as directed by the Engineer and secured in place with one plated brass machine screw and nut.

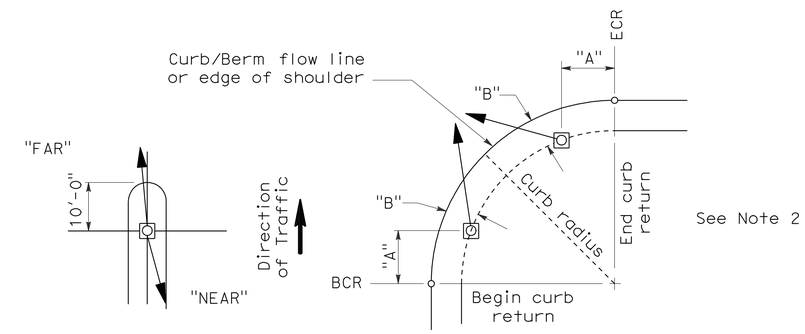

NOTES:

1. Typical signal pole placement unless dimensioned on plans.
2. For "A" and "B" dimensions, see Pole Schedule, or as directed by the Engineer.

SIGNAL STANDARD PLACEMENT DIMENSIONS AND EQUIPMENT LOCATIONS

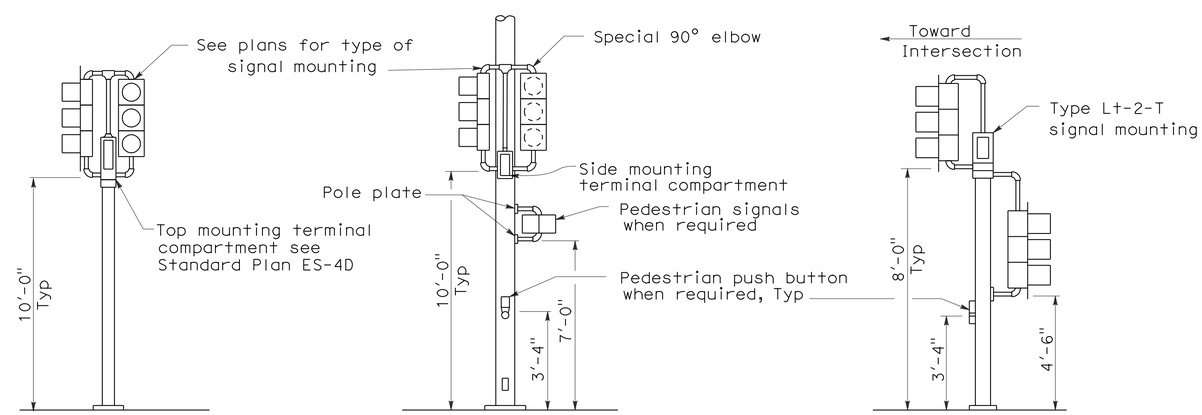

TOP MOUNTED SIGNALS (TV)

Type 1-A, 1-B, 1-C and 1-D standard as indicated on the plans

SIDE MOUNTED SIGNALS (SV AND SP)

Normally used on standards with luminaire or signal mast arm

LEFT TURN LANE SIGNAL

Type 1-A, 1-B, 1-C and 1-D standard as indicated on plans

TYPICAL SIGNAL INSTALLATIONS

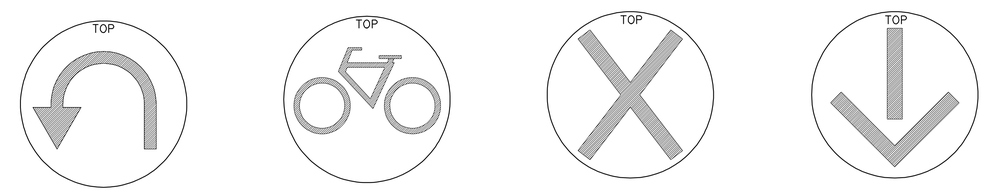

U-TURN SIGNAL FACE

BICYCLE SIGNAL FACE

LANE CONTROL SIGNAL FACE

LANE CONTROL SIGNAL FACE

STATE OF CALIFORNIA
DEPARTMENT OF TRANSPORTATION

ELECTRICAL SYSTEMS (SIGNAL HEADS AND MOUNTINGS)

NO SCALE

RSP ES-4C DATED JUNE 6, 2008 SUPERSEDES STANDARD PLAN ES-4C DATED MAY 1, 2006 - PAGE 420 OF THE STANDARD PLANS BOOK DATED MAY 2006.

REVISED STANDARD PLAN RSP ES-4C

2006 REVISED STANDARD PLAN RSP ES-4C

5-19-08

DIST	COUNTY	ROUTE	POST MILES TOTAL PROJECT	SHEET NO.	TOTAL SHEETS
04	Son	1	27.2	42	59

REGISTERED ELECTRICAL ENGINEER

June 6, 2008
PLANS APPROVAL DATE

REGISTERED PROFESSIONAL ENGINEER Jeffery G. McRae No. E14512 Exp. 6-30-10 ELECTRICAL STATE OF CALIFORNIA

The State of California or its officers or agents shall not be responsible for the accuracy or completeness of electronic copies of this plan sheet.

To accompany plans dated 7-12-10

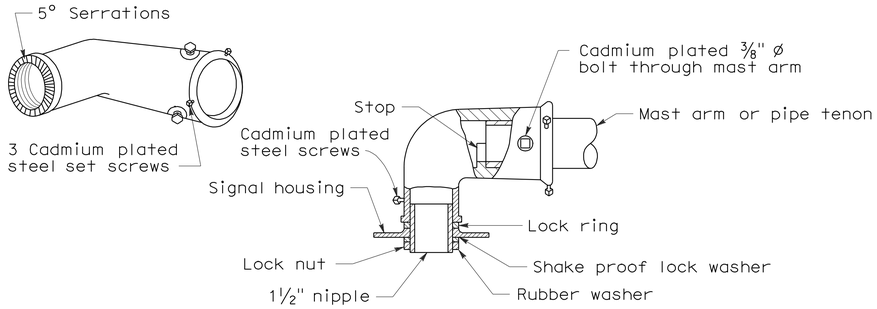

MAST ARM MOUNTING - TYPE "MAT"

For 2 NPS pipe, see Note 1.

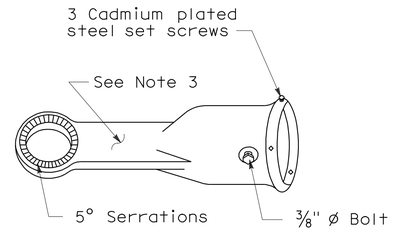

MAST ARM MOUNTING - TYPE "MAS"

For 2 NPS pipe. See Note 1.

SIGNAL SLIP FITTERS

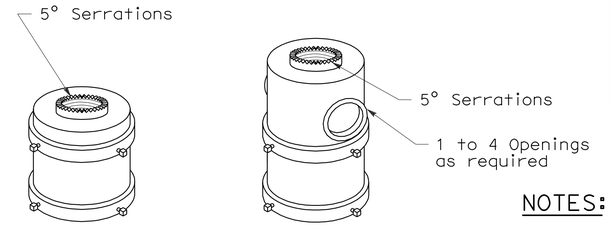

For one mounting For mulitiple mountings

TOP MOUNTINGS

For 4 NPS pipe, see Note 2.

NOTES:

1. After mast arm signal has been plumbed and secured, drill 7/16" hole through mast arm tenon in line with slip fitter hole. Place a cadmium plated 3/8" ø galvanized bolt with washer under bolt head through hole and secure with washer, nut, and locknut. Seal openings between mast arm mountings and mast arm with mastic.
2. (a) Threaded top mounted slip fitter openings shall be 1½ NPS.
   (b) Serrations in fittings shall match those on bottom of signal heads or in lock ring.
   (c) Top opening shall be offset when backplate is used.
3. Wireway shall have a cross section area of 0.95 square inch minimum. Minimum width of ½".

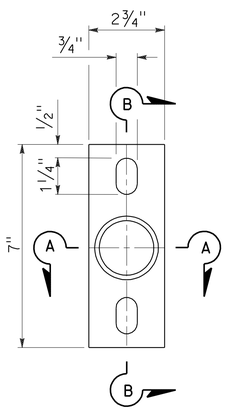

POLE PLATE

For side mountings

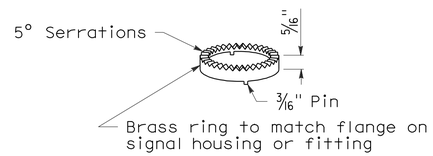

LOCK RING

Use where locking ring is not integral with signal housing or fitting.

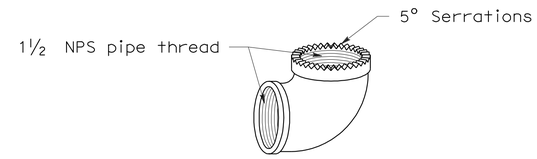

SPECIAL 90° ELBOW

One for each signal head, except those with special slip fitter mounting

MISCELLANEOUS MOUNTING HARDWARE

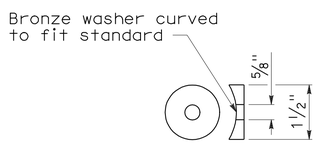

DETAIL "C"

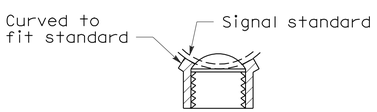

SECTION A-A

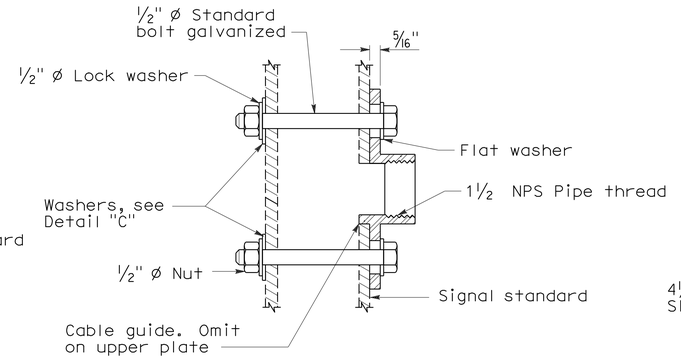

SECTION B-B

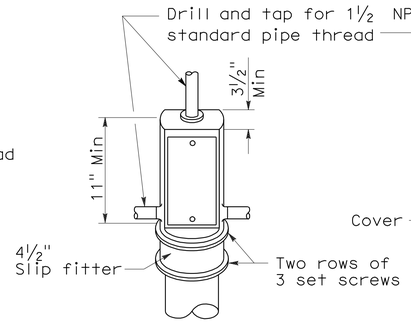

TOP MOUNTING

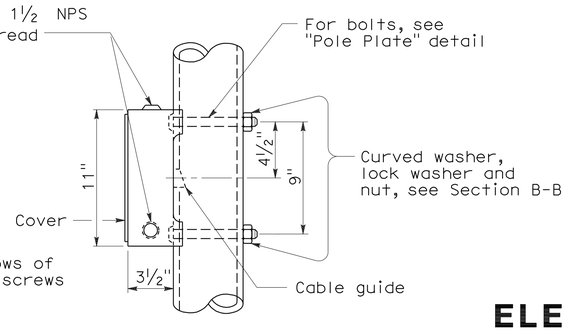

SIDE MOUNTING

TERMINAL COMPARTMENTS

STATE OF CALIFORNIA
DEPARTMENT OF TRANSPORTATION

ELECTRICAL SYSTEMS (SIGNAL HEADS AND MOUNTINGS)

NO SCALE

RSP ES-4D DATED June 6, 2008 SUPERSEDES STANDARD PLAN ES-4D
DATED MAY 1, 2006 - PAGE 421 OF THE STANDARD PLANS BOOK DATED MAY 2006.

REVISED STANDARD PLAN RSP ES-4D

2006 REVISED STANDARD PLAN RSP ES-4D

5-19-08

DIST	COUNTY	ROUTE	POST MILES TOTAL PROJECT	SHEET NO.	TOTAL SHEETS
04	Son	1	27.2	43	59

REGISTERED ELECTRICAL ENGINEER

October 5, 2007
PLANS APPROVAL DATE

REGISTERED PROFESSIONAL ENGINEER Jeffery G. McRae No. E14512 Exp. 6-30-08 ELECTRICAL STATE OF CALIFORNIA

The State of California or its officers or agents shall not be responsible for the accuracy or completeness of electronic copies of this plan sheet.

To accompany plans dated 7-12-10

LOOP INSTALLATION PROCEDURE

1. Loops shall be centered in lanes.
2. Saw slots in pavement for loop conductors as shown in details.
3. Distance between side of loop and a lead-in saw cut from adjacent detectors shall be 2'-0" minimum. Distance between lead-in saw cuts shall be 6" minimum.
4. Bottom of saw slot shall be smooth with no sharp edges.
5. Slots shall be washed until clean, blown out and thoroughly dried before installing loop conductors.
6. Adjacent loops on the same sensor unit channel shall be wound in opposite directions.
7. Identify and tag loop circuit pairs in the pull box with loop number, start (S) and finish (F) of conductor. Identify and tag lead-in-cable with sensor number and phase.
8. Install loop conductor in slot using a 3/16" to 1/4" thick wood paddle. Hold loop conductors with wood paddles (at the bottom of the sawed slot) during sealant placement.
9. No more than 2 twisted pairs shall be installed in one sawed slot.
10. Allow additional 5'-0" of slack length of conductor for the lead-in run to pull box.
11. The additional length of each conductor for each loop shall be twisted together into a pair (6 turns per 3'-4" minimum) before being placed in the slot and conduit leading to pull box.
12. Test each loop circuit for continuity, circuit resistance and insulation resistance at the pull box before filling slots.
13. Fill slots as shown in details.
14. Splice loop conductors to lead-in-cable. Splices shall be soldered.
15. End of lead-in-cable and Type 2 loop conductor shall be waterproofed prior to installing in conduit to prevent moisture from entering the cable.
16. Lead-in-cable shall not be spliced between the pull box and the controller cabinet terminals.
17. Test each loop circuit for continuity, circuit resistance and insulation resistance at the controller cabinet location.
18. Where loop conductors are not to be spliced to a lead-in-cable, the ends of the conductors shall be taped and waterproofed with electrical insulating coating.

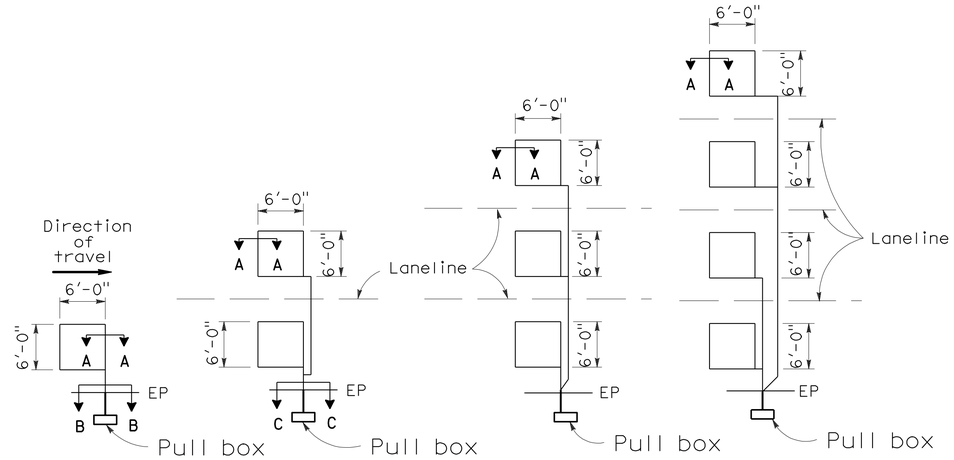

TYPE 1A INSTALLATION | TYPE 2A INSTALLATION | TYPE 3A INSTALLATION | TYPE 4A INSTALLATION

SAWCUT DETAILS

(Type A loop detector configurations illustrated)

1. 1A thru 4A = 1 Type A loop configuration in each lane.
2. 1B thru 4B = 1 Type B loop configuration in each lane.
3. 1C = 1 Type C loop configuration entering lanes as required.
4. 1D thru 4D = 1 Type D loop configuration in each lane.
5. 1E thru 4E = 1 Type E loop configuration in each lane.
6. 1Q thru 4Q = 1 Type Q loop configuration in each lane. (Use Type A, B, C, D, E or Q loop detector configurations only when specified or shown on plans)

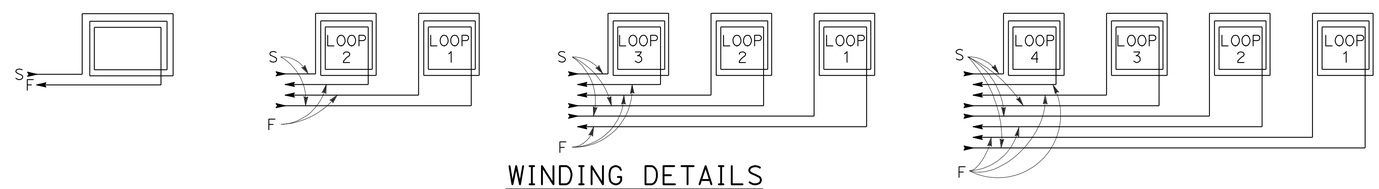

WINDING DETAILS

See Notes 6 and 7

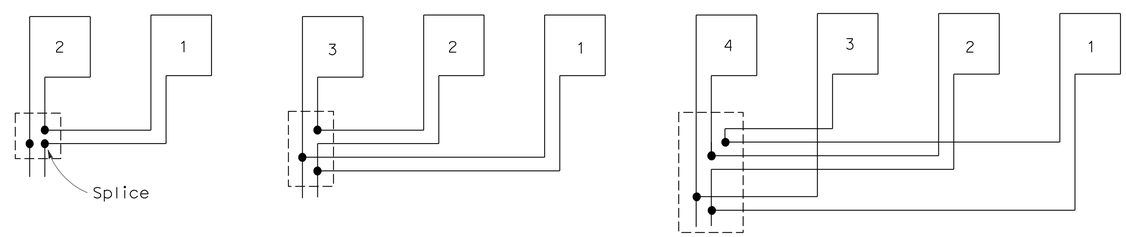

TYPICAL LOOP CONNECTIONS

(Dashed lines represent the pull box)

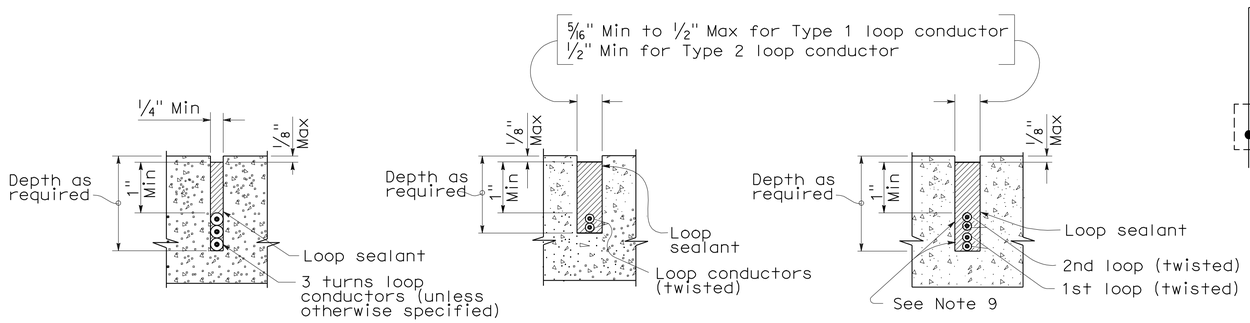

SECTION A-A | SECTION B-B | SECTION C-C

SLOT DETAILS - TYPE 1 AND TYPE 2 LOOP CONDUCTOR

STATE OF CALIFORNIA
DEPARTMENT OF TRANSPORTATION

ELECTRICAL SYSTEMS (DETECTORS)

NO SCALE

RSP ES-5A DATED OCTOBER 5, 2007 SUPERCEDES STANDARD PLAN ES-5A DATED MAY 1, 2006 - PAGE 423 OF THE STANDARD PLANS BOOK DATED MAY 2006.

REVISED STANDARD PLAN RSP ES-5A

2006 REVISED STANDARD PLAN RSP ES-5A

8-17-07

DIST	COUNTY	ROUTE	POST MILES TOTAL PROJECT	SHEET No	TOTAL SHEETS
04	Son	1	27.2	44	59

REGISTERED CIVIL ENGINEER 04-06-10 DATE

7-12-10
PLANS APPROVAL DATE

REGISTERED PROFESSIONAL ENGINEER HARDEEP SINGH No. 74410 Exp. 9-30-11 CIVIL STATE OF CALIFORNIA

The State of California or its officers or agents shall not be responsible for the accuracy or completeness of electronic copies of this plan sheet.

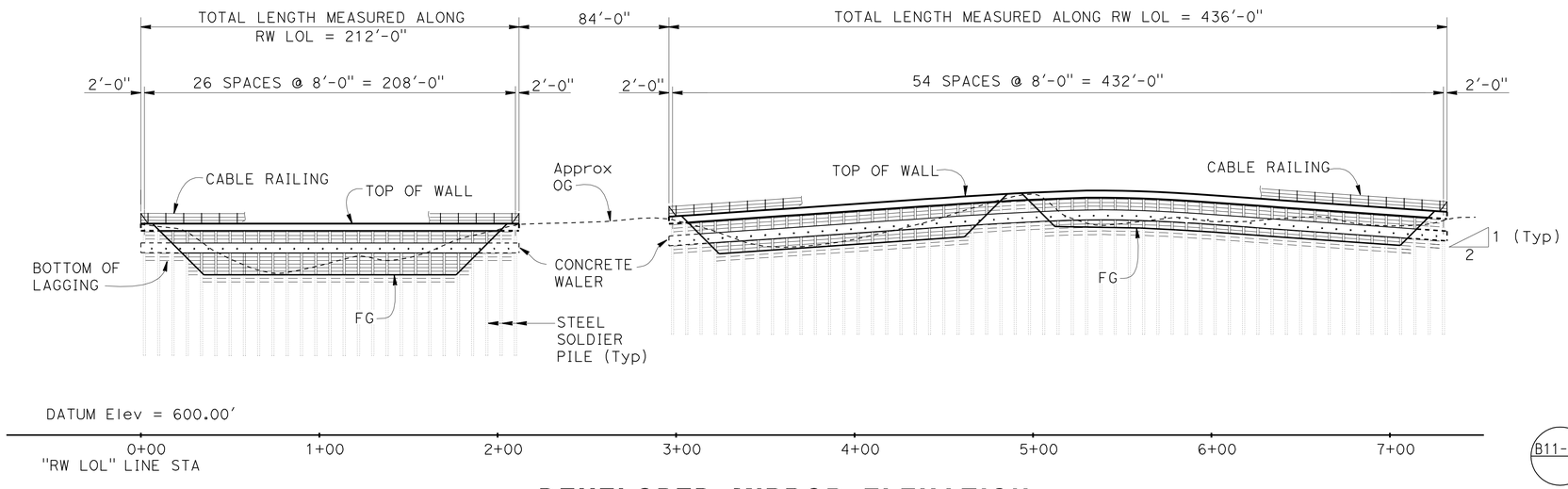

DEVELOPED MIRROR ELEVATION

Horiz (1"=40'-0") Vert (1"=20'-0")

PLAN

1"=40'-0"

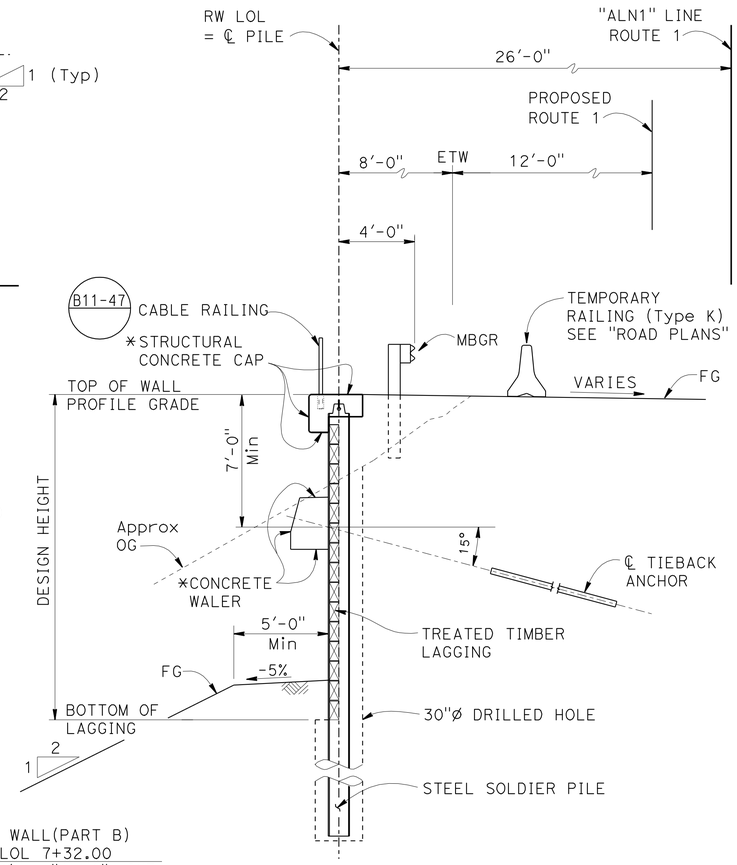

TYPICAL SECTION

¼"=1'-0"

CURVE DATA

No.	R	Δ	T	L	No.	R	Δ	T	L
A	120.32	0°59'40"	1.04	2.09	G	262.47	10°34'50"	24.30	48.47
B	120.32	7°32'21"	7.93	15.83	H	1344.78	11°27'26"	134.91	268.91
C	288.47	10°34'50"	26.71	53.27	J	321.28	17°55'30"	50.67	100.51
D	1370.78	2°56'56"	35.28	70.55	K	62.58	17°40'21"	9.73	19.30
E	1370.78	8°30'29"	101.96	203.55	L	295.28	17°55'30"	46.57	92.38
F	94.32	34°53'49"	29.65	57.45	M	88.58	76°41'13"	70.07	118.56

NOTES:

1. The Contractor shall verify all controlling field dimensions before ordering or fabricating any material.
2. For MBGR, see "ROADWAY PLANS".
3. For GENERAL NOTES and QUANTITES see "INDEX TO PLANS" sheet.

SAMAD HAMOUD
DESIGN ENGINEER

	BY	CHECKED
DESIGN	H. Singh	S. Hamoud
DETAILS	Min Yu	S. Hamoud
QUANTITIES	H. Singh	A. Jenabzadeh

LOAD & RESISTANCE FACTOR DESIGN — LIVE LOADING: HL93 W/"LOW-BOY"; PERMIT DESIGN VEHICLE

LAYOUT — BY H. Singh — CHECKED S. Hamoud

SPECIFICATIONS — BY V. Renganathan — PLANS AND SPECS COMPARED V. Renganathan

ORIGINAL SCALE IN INCHES FOR REDUCED PLANS 0 1 2 3

STATE OF CALIFORNIA
DEPARTMENT OF TRANSPORTATION

DIVISION OF ENGINEERING SERVICES
STRUCTURE DESIGN
DESIGN BRANCH 16

CU 04
EA 3S7401

BRIDGE NO. 20E0031
POST MILE 27.1/27.3

RETAINING WALL
GENERAL PLAN

DISREGARD PRINTS BEARING EARLIER REVISION DATES → REVISION DATES 01/26/10 02/01/10 03/10/10 03/29/10

SHEET 1 OF 16

STRUCTURES DESIGN GENERAL PLAN SHEET (ENGLISH) (REV.07-24-06)

FILE => 20e0031-a-gp01.dgn

USERNAME => trmorlok DATE PLOTTED => 15-JUL-2010 TIME PLOTTED => 08:35

DIST	COUNTY	ROUTE	POST MILES TOTAL PROJECT	SHEET No	TOTAL SHEETS
04	Son	1	27.2	45	59

REGISTERED CIVIL ENGINEER 04-06-10 DATE

7-12-10
PLANS APPROVAL DATE

REGISTERED PROFESSIONAL ENGINEER HARDEEP SINGH No. 74410 Exp. 9-30-11 CIVIL STATE OF CALIFORNIA

The State of California or its officers or agents shall not be responsible for the accuracy or completeness of electronic copies of this plan sheet.

INDEX TO PLANS

SHEET NO.	TITLES
1	GENERAL PLAN
2	INDEX TO PLANS
3	STRUCTURE PLAN NO. 1
4	STRUCTURE PLAN NO. 2
5	STRUCTURE PLAN NO. 3
6	FOUNDATION PLAN NO. 1
7	FOUNDATION PLAN NO. 2
8	RETAINING WALL DETAILS NO. 1
9	RETAINING WALL DETAILS NO. 2
10	RETAINING WALL DETAILS NO. 3
11	RETAINING WALL DETAILS NO. 4
12	LOG OF TEST BORINGS 1 OF 5
13	LOG OF TEST BORINGS 2 OF 5
14	LOG OF TEST BORINGS 3 OF 5
15	LOG OF TEST BORINGS 4 OF 5
16	LOG OF TEST BORINGS 5 OF 5

GENERAL NOTES
WORKING STRESS DESIGN

DESIGN: AASHTO Standard Specifications for Highway Bridges dated 2007 with Interim Specifications Bridges and as supplemented by Bridge Design Specification (Caltrans)

LIVE LOAD: Surcharge = 240 psf

REINFORCED CONCRETE:
(Working Stress Design)

f_y = 60 ksi
f_c' = 4 ksi
n = 8

SOIL PARAMETERS :

Active $\phi = 20°$ $\gamma = 120$ lb/ft^3 c = 500 psf
Passive $\phi = 38°$ $\gamma = 125$ lb/ft^3 c = 200 psf

STRUCTURAL TIMBER: Treated Douglas Flr. no. 1 or better, Timber to be full sawn

STRUCTURAL STEEL:
(Working Stress Design)

F_y = 36 ksi
f_s = 22 ksi

PRESTRESSING STEEL:

Strands - ASTM designation = A416
T = Design Force per Tieback = 120 KIP
f_{pu} = Specified Tensile Strength of Prestressing steel (ksi)

A_s(min) = Minimum Cross Sectional Area of Prestressing Steel in Tieback Tendon

$$A_s(\min) = \frac{1.5\ T}{0.75\ f_{pu}}$$

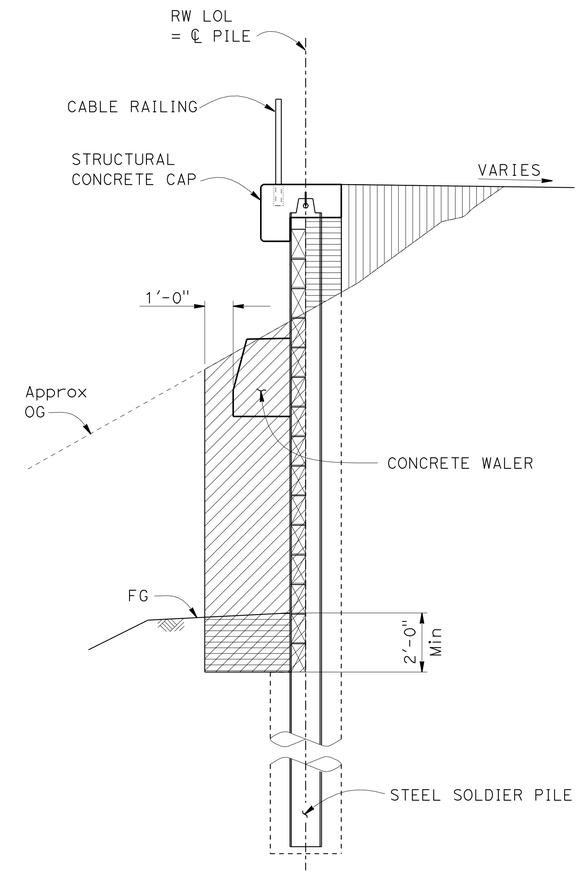

EXCAVATION AND BACKFILL

LEGEND:

- Structure Excavation, Soldier Pile Wall
- Structure Backfill, Soldier Pile Wall
- Roadway Embankment

STANDARD PLANS MAY 2006

A10A	ACRONYMS AND ABBREVIATIONS
A10B	ACRONYMS AND ABBREVIATIONS
A10C	SYMBOLS
A10D	SYMBOLS
B11-47	CABLE RAILING

STANDARD PLAN SHEET NO.
DETAIL NO.

QUANTITIES

STRUCTURE EXCAVATION (SOLDIER PILE WALL)	606	CY
STRUCTURE BACKFILL (SOLDIER PILE WALL)	441	CY
LEAN CONCRETE BACKFILL	53	CY
CONCRETE BACKFILL (SOLDIER PILE WALL)	332	CY
STEEL SOLDIER PILE (HP 14 x 73)	2,870	LF
30" DIAMETER DRILLED HOLE	2,412	LF
TIEBACK ANCHOR	80	EA
STRUCTURAL CONCRETE, RETAINING WALL	220	CY
BAR REINFORCING STEEL (RETAINING WALL)	67,900	LB
TIMBER LAGGING	45	MFBM
CLEAN AND PAINT STEEL SOLDIER PILING	LUMP	SUM
CABLE RAILING	648	LF
PREPARE AND STAIN CONCRETE	7,893	SQFT

	BY	CHECKED
DESIGN	H. Singh	S. Hamoud
DETAILS	Min Yu	S. Hamoud
QUANTITIES	H. Singh	A. Jenabzadeh

STATE OF CALIFORNIA
DEPARTMENT OF TRANSPORTATION

DIVISION OF ENGINEERING SERVICES
STRUCTURE DESIGN
DESIGN BRANCH 16

BRIDGE NO. 20E0031
POST MILE 27.1/27.3

RETAINING WALL
INDEX TO PLANS

STRUCTURES DESIGN DETAIL SHEET (ENGLISH) (REV. 10/25/05)

ORIGINAL SCALE IN INCHES FOR REDUCED PLANS 0 1 2 3

CU 04
EA 3S7401

DISREGARD PRINTS BEARING EARLIER REVISION DATES

REVISION DATES: 02/01/10 03/10/10 03/29/10 04/05/10

SHEET 2 OF 16

FILE => 20e0031-b-itp.dgn

USERNAME => ttmarlok DATE PLOTTED => 15-JUL-2010 TIME PLOTTED => 08:35

DIST	COUNTY	ROUTE	POST MILES TOTAL PROJECT	SHEET No	TOTAL SHEETS
04	Son	1	27.2	46	59

REGISTERED CIVIL ENGINEER 04-06-10 DATE

7-12-10
PLANS APPROVAL DATE

REGISTERED PROFESSIONAL ENGINEER HARDEEP SINGH No. 74410 Exp. 9-30-11 CIVIL STATE OF CALIFORNIA

The State of California or its officers or agents shall not be responsible for the accuracy or completeness of electronic copies of this plan sheet.

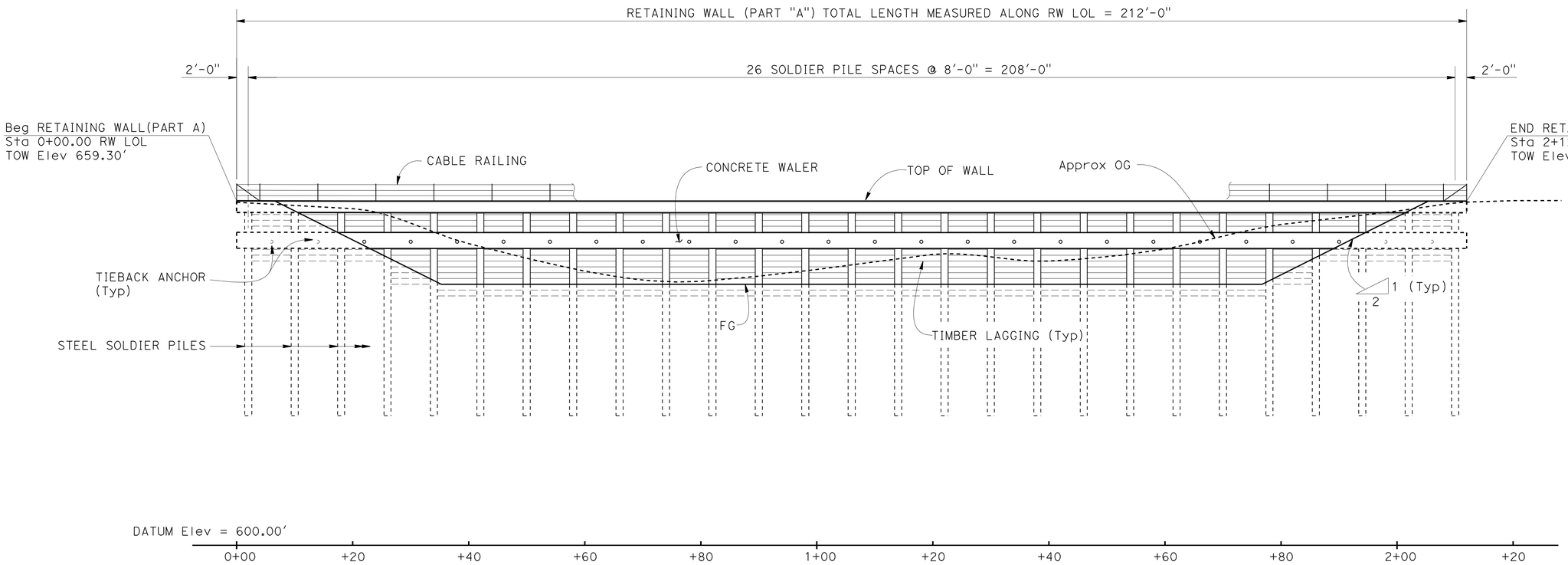

STATION	T. O. W. Elev (ft)	FG Elev (ft)
0+00.00	659.30	Top Wall
0+20.00	659.27	652.57
0+40.00	659.26	644.93
0+60.00	659.26	644.93
0+80.00	659.26	644.93
1+00.00	659.26	644.93
1+20.00	659.26	644.93
1+40.00	659.26	644.93
1+60.00	659.26	644.93
1+80.00	659.26	646.56
2+00.00	659.26	656.56
2+12.00	659.26	Top Wall

DEVELOPED MIRROR ELEVATION

1"=10'-0"

Pile NO.	1	2	3	4	5	6	7	8	9	10	11	12	13	14	15	16	17	18	19	20	21	22	23	24	25	26	27
Pile Length (ft)	35	35	35	35	35	35	35	35	35	35	35	35	35	35	35	35	35	35	35	35	35	35	35	35	35	35	35
Number of Timber Lagging Between Piles	9	9	9	13	15	15	15	15	15	15	15	15	15	15	15	15	15	15	15	15	15	15	15	13	9	9	9

NOTES:

1. Pile Length is measured from Top of Pile to Tip of Pile.
2. Place Timber Lagging horizontal.
3. FG Elevations are at front face of Timber Lagging.
4. Pile Tip Elevation is controlled by lateral loading.

DESIGN	BY H. Singh	CHECKED S. Hamoud	
DETAILS	BY Min Yu	CHECKED S. Hamoud	
QUANTITIES	BY H. Singh	CHECKED A. Jenabzadeh	

STATE OF CALIFORNIA
DEPARTMENT OF TRANSPORTATION

DIVISION OF ENGINEERING SERVICES
STRUCTURE DESIGN
DESIGN BRANCH 16

BRIDGE NO. 20E0031
POST MILE 27.1/27.3

RETAINING WALL
STRUCTURE PLAN NO. 1

STRUCTURES DESIGN DETAIL SHEET (ENGLISH) (REV. 10/25/05)

ORIGINAL SCALE IN INCHES FOR REDUCED PLANS 0 1 2 3

CU 04
EA 3S7401

DISREGARD PRINTS BEARING EARLIER REVISION DATES 02/01/10 03/10/10

REVISION DATES

SHEET 3 OF 16

FILE => 20e0031-c-sp01.dgn

USERNAME => trmorlak DATE PLOTTED => 15-JUL-2010 TIME PLOTTED => 08:35

DIST	COUNTY	ROUTE	POST MILES TOTAL PROJECT	SHEET No	TOTAL SHEETS
04	Son	1	27.2	47	59

REGISTERED CIVIL ENGINEER 04-06-10 DATE

7-12-10
PLANS APPROVAL DATE

REGISTERED PROFESSIONAL ENGINEER HARDEEP SINGH No. 74410 Exp. 9-30-11 CIVIL STATE OF CALIFORNIA

The State of California or its officers or agents shall not be responsible for the accuracy or completeness of electronic copies of this plan sheet.

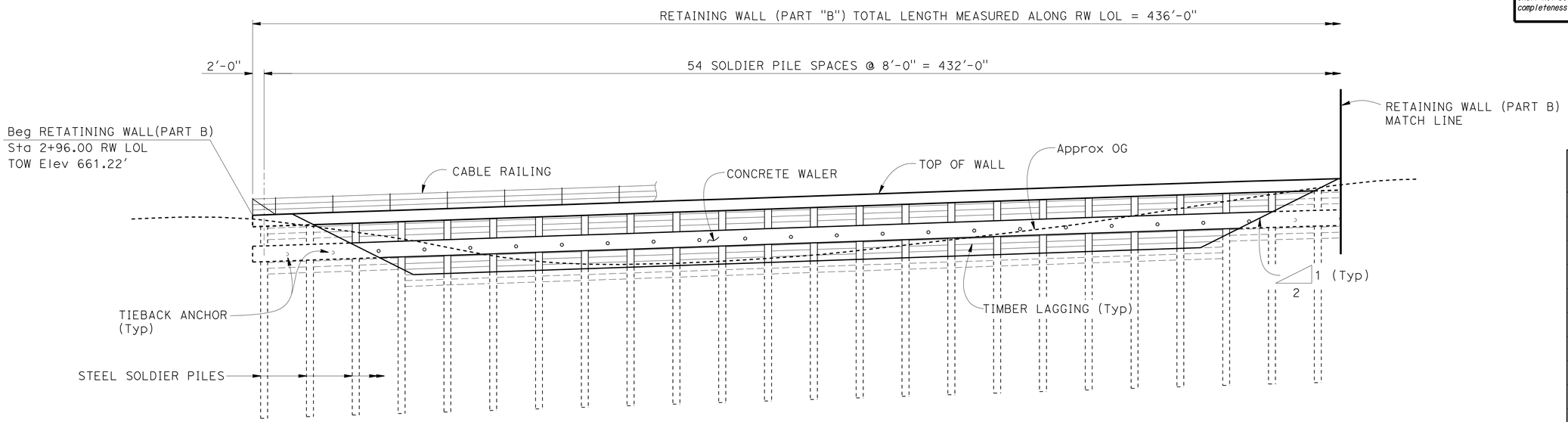

STATION	T. O. W. Elev (ft)	FG Elev (ft)
2+96.00	661.22	Top Wall
3+00.00	661.36	660.19
3+20.00	662.05	652.90
3+40.00	662.73	651.40
3+60.00	663.41	652.08
3+80.00	664.10	652.77
4+00.00	664.79	653.46
4+20.00	665.48	654.15
4+40.00	666.17	654.84
4+60.00	666.84	655.51
4+80.00	667.45	664.80

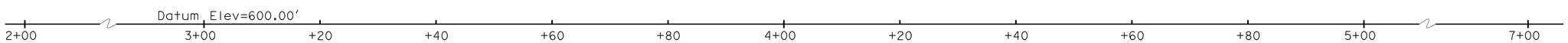

DEVELOPED MIRROR ELEVATION

1"=10'-0"

Pile NO.	1	2	3	4	5	6	7	8	9	10	11	12	13	14	15	16	17	18	19	20	21	22	23	24
Pile Length (ft)	35	35	35	35	35	35	35	35	35	35	35	35	35	35	35	35	35	35	35	35	35	35	35	35
Number of Timber Lagging Between Piles	9	9	9	12	12	12	12	12	12	12	12	12	12	12	12	12	12	12	12	12	12	9	9	9

NOTES:

1. Pile Length is measured from Top of Pile to Tip of Pile.
2. Place Timber Lagging horizontal.
3. FG Elevations are at front face of Timber Lagging.
4. Pile Tip Elevation is controlled by lateral loading.

	BY	CHECKED
DESIGN	H. Singh	S. Hamoud
DETAILS	Min Yu	S. Hamoud
QUANTITIES	H. Singh	A. Jenabzadeh

STATE OF CALIFORNIA
DEPARTMENT OF TRANSPORTATION

DIVISION OF ENGINEERING SERVICES
STRUCTURE DESIGN
DESIGN BRANCH 16

BRIDGE NO. 20E0031
POST MILE 27.1/27.3

RETAINING WALL
STRUCTURE PLAN NO. 2

STRUCTURES DESIGN DETAIL SHEET (ENGLISH) (REV. 10/25/05)

ORIGINAL SCALE IN INCHES FOR REDUCED PLANS 0 1 2 3

CU 04
EA 3S7401

DISREGARD PRINTS BEARING EARLIER REVISION DATES → 02/08/10 03/10/10

REVISION DATES

SHEET 4 OF 16

FILE => 20e0031-c-sp02.dgn

USERNAME => trphlis DATE PLOTTED => 15-JUL-2010 TIME PLOTTED => 08:57

DIST	COUNTY	ROUTE	POST MILES TOTAL PROJECT	SHEET No	TOTAL SHEETS
04	Son	1	27.2	48	59

REGISTERED CIVIL ENGINEER 04-06-10 DATE

7-12-10
PLANS APPROVAL DATE

REGISTERED PROFESSIONAL ENGINEER HARDEEP SINGH No. 74410 Exp. 9-30-11 CIVIL STATE OF CALIFORNIA

The State of California or its officers or agents shall not be responsible for the accuracy or completeness of electronic copies of this plan sheet.

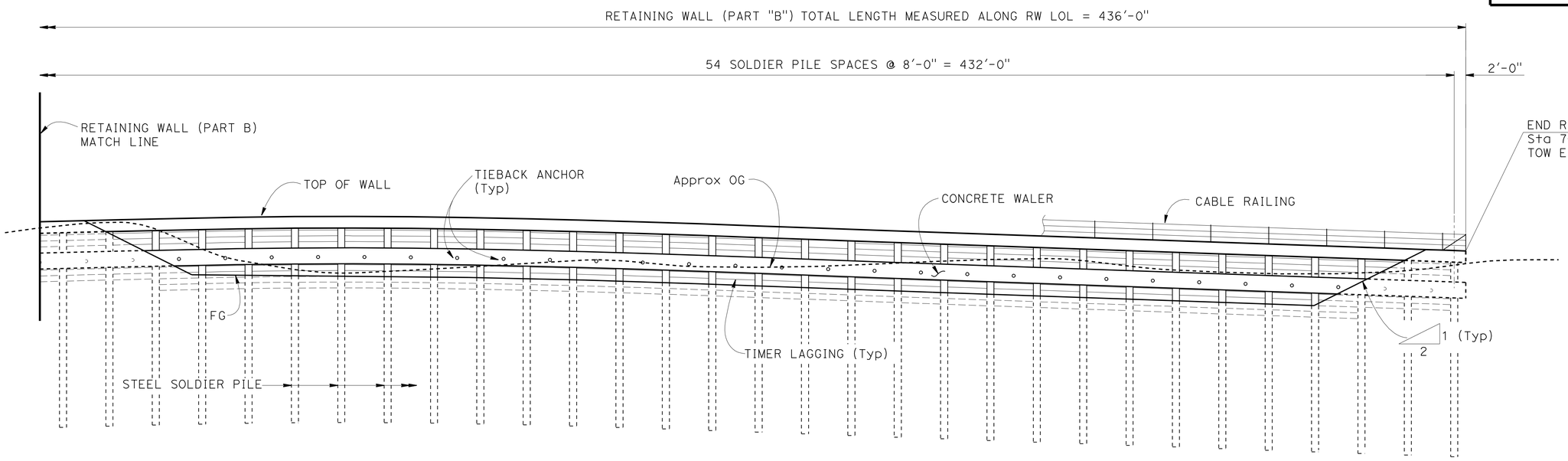

STATION	T. O. W. Elev (ft)	FG Elev (ft)
5+00.00	667.97	664.60
5+20.00	668.39	658.41
5+40.00	668.54	658.21
5+60.00	668.34	658.01
5+80.00	667.88	657.55
6+00.00	667.25	656.92
6+20.00	666.53	656.20
6+40.00	665.80	655.47
6+60.00	665.10	654.77
6+80.00	664.40	654.07
7+00.00	663.70	653.37
7+20.00	663.00	660.25
7+32.00	662.58	Top Wall

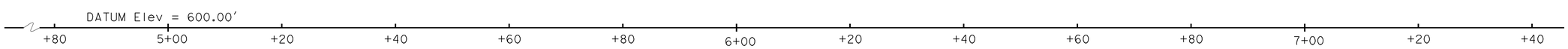

DEVELOPED MIRROR ELEVATION

1"=10'-0"

Pile NO.	Pile Length (ft)	Number of Timber Lagging Between Piles
25	35	9
26	35	9
27	35	9
28	35	11
29	35	11
30	35	11
31	35	11
32	35	11
33	35	11
34	35	11
35	35	11
36	35	11
37	35	11
38	35	11
39	35	11
40	35	11
41	35	11
42	35	11
43	35	11
44	35	11
45	35	11
46	35	11
47	35	11
48	35	11
49	35	11
50	35	11
51	35	11
52	35	11
53	35	11
54	35	9
55	35	9

NOTES:

1. Pile Length is measured from Top of Pile to Tip of Pile.
2. Place Timber Lagging horizontal.
3. FG Elevations are at front face of Timber Lagging.
4. Pile Tip Elevation is controlled by lateral loading.

	BY	CHECKED
DESIGN	H. Singh	S. Hamoud
DETAILS	Min Yu	S. Hamoud
QUANTITIES	H. Singh	A. Jenabzadeh

STATE OF CALIFORNIA
DEPARTMENT OF TRANSPORTATION

DIVISION OF ENGINEERING SERVICES
STRUCTURE DESIGN
DESIGN BRANCH 16

BRIDGE NO. 20E0031
POST MILE 27.1/27.3

RETAINING WALL
STRUCTURE PLAN NO. 3

STRUCTURES DESIGN DETAIL SHEET (ENGLISH) (REV. 10/25/05)

ORIGINAL SCALE IN INCHES FOR REDUCED PLANS 0 1 2 3

CU 04
EA 3S7401

DISREGARD PRINTS BEARING EARLIER REVISION DATES 02/02/10 03/10/10

REVISION DATES

SHEET 5 OF 16

FILE => 20e0031-c-sp03.dgn

USERNAME => trphillis DATE PLOTTED => 15-JUL-2010 TIME PLOTTED => 08:57

DIST	COUNTY	ROUTE	POST MILES TOTAL PROJECT	SHEET No	TOTAL SHEETS
04	Son	1	27.2	49	59

REGISTERED CIVIL ENGINEER 04-06-10 DATE

7-12-10
PLANS APPROVAL DATE

REGISTERED PROFESSIONAL ENGINEER HARDEEP SINGH No. 74410 Exp. 9-30-11 CIVIL STATE OF CALIFORNIA

The State of California or its officers or agents shall not be responsible for the accuracy or completeness of electronic copies of this plan sheet.

CURVE DATA

No.	R	Δ	T	L
A	120.32′	0°59′40"	1.04′	2.09′
B	120.32′	7°32′21"	7.93′	15.83′
C	288.47′	10°34′50"	26.71′	53.27′
D	1370.78′	2°56′56"	35.28′	70.55′
E	1370.78′	8°30′29"	101.96′	203.55′
F	94.32′	34°53′49"	29.65′	57.45′
G	262.47′	10°34′50"	24.30′	48.47′
H	1344.78′	11°27′26"	134.91′	268.91′

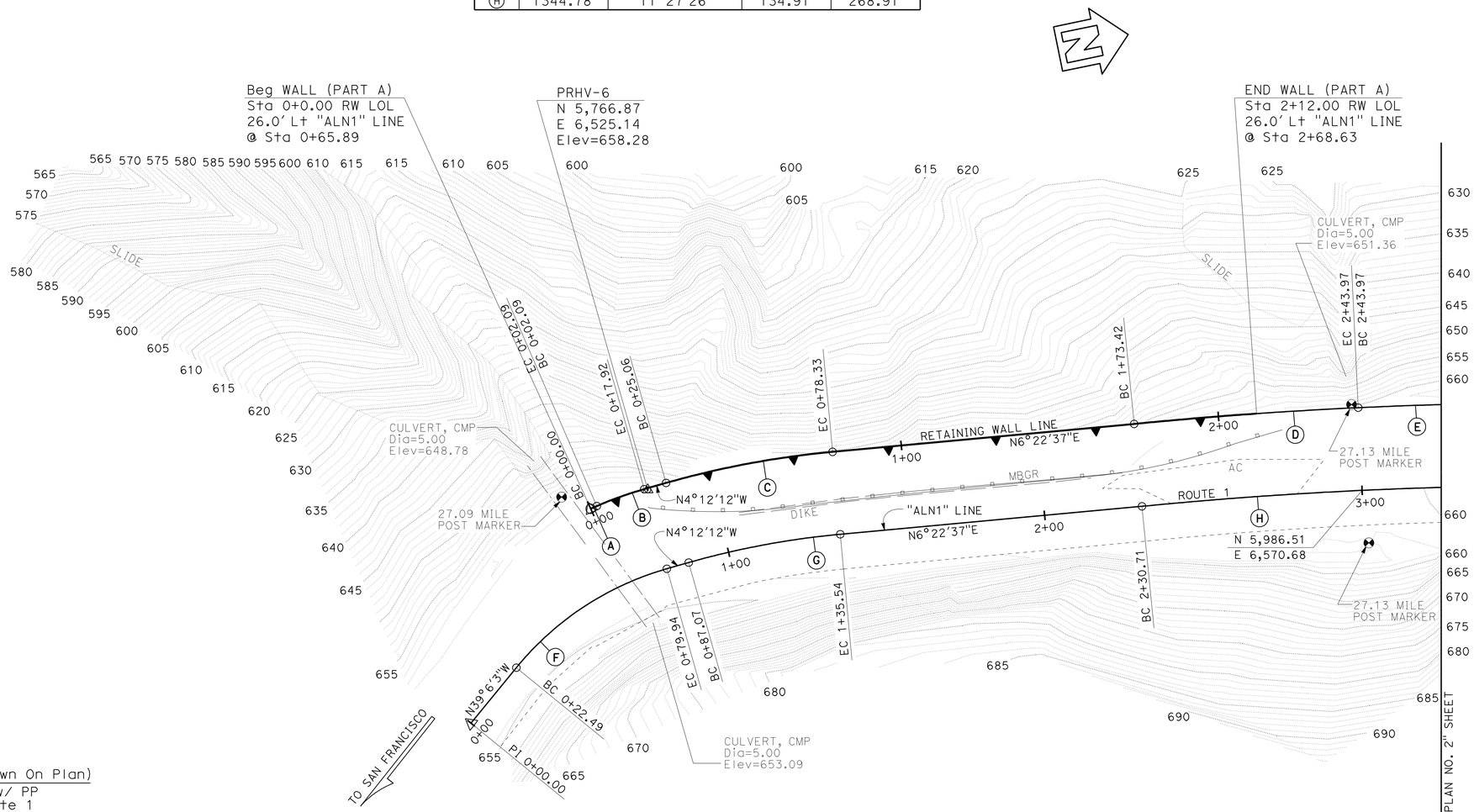

SURVEY CONTROL

PRHV-4 (Not Shown On Plan)
Fnd Set 1" IP w/ PP
23.08 FT Lt. ℄ Rte 1
Sta. 5+53.43
N 6,240.96
E 6,615.06
Elev. = 668.81

PRHV-6
Fnd Set 1"IP w/ PP
25.50 FT Lt. ℄ Rte 1
Sta. 0+80.94
N 5,766.87
E 6,525.14
Elev. = 658.28

PRELIMINARY INVESTIGATION SECTION					
SCALE 1"=20′	VERT.DATUM Assumed	PHOTOGRAMMETRY AS OF: X			
	HORZ.DATUM Assumed	SURVEYED	BY District/Pallares	CHECKED	BY X
	ALIGNMENT TIES Dist.Traverse Sheet	DRAFTED	BY T.Zolnikov 02/2010	CHECKED	BY X

DESIGN	BY H. Singh	CHECKED	S. Hamoud
DETAILS	BY Min Yu	CHECKED	S. Hamoud
QUANTITIES	BY H. Singh	CHECKED	A. Jenabzadeh

STATE OF CALIFORNIA
DEPARTMENT OF TRANSPORTATION

DIVISION OF ENGINEERING SERVICES
STRUCTURE DESIGN
DESIGN BRANCH 16

BRIDGE NO. 20E0031
POST MILE 27.1/27.3

RETAINING WALL
FOUNDATION PLAN NO. 1

STRUCTURES FOUNDATION PLAN SHEET (ENGLISH) (REV. 10/25/05)

ORIGINAL SCALE IN INCHES FOR REDUCED PLANS 0 1 2 3

CU 04
EA 3S7401

DISREGARD PRINTS BEARING EARLIER REVISION DATES

REVISION DATES 02/22/10 03/10/10

SHEET 6 OF 16

FILE => 20e0031-e-fp01.dgn

USERNAME => rrmikes1 DATE PLOTTED => 24-AUG-2010 TIME PLOTTED => 13:02

DIST	COUNTY	ROUTE	POST MILES TOTAL PROJECT	SHEET No	TOTAL SHEETS
04	Son	1	27.2	50	59

REGISTERED CIVIL ENGINEER 04-06-10 DATE

7-12-10
PLANS APPROVAL DATE

REGISTERED PROFESSIONAL ENGINEER HARDEEP SINGH No. 74410 Exp. 9-30-11 CIVIL STATE OF CALIFORNIA

The State of California or its officers or agents shall not be responsible for the accuracy or completeness of electronic copies of this plan sheet.

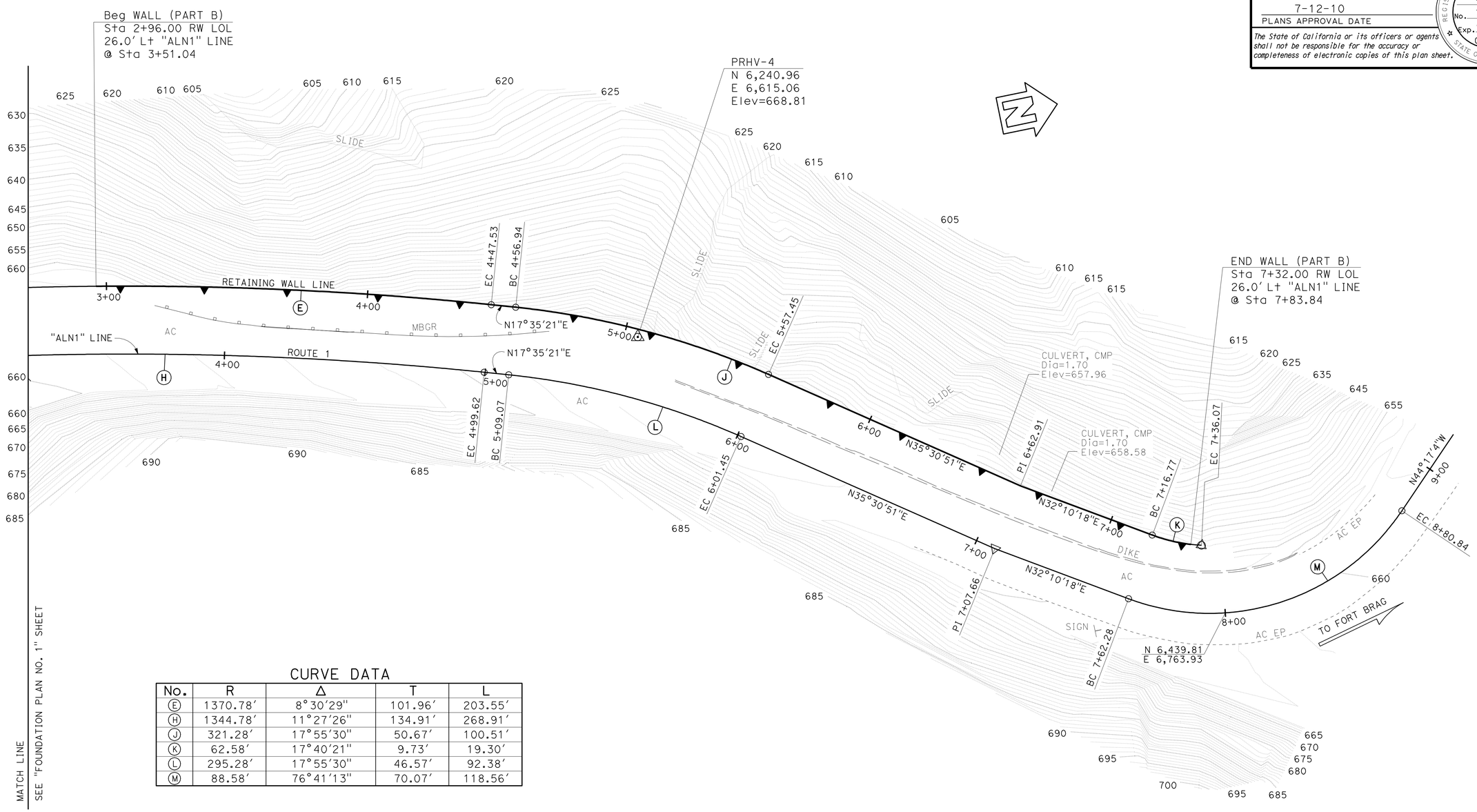

CURVE DATA

No.	R	Δ	T	L
E	1370.78′	8°30′29"	101.96′	203.55′
H	1344.78′	11°27′26"	134.91′	268.91′
J	321.28′	17°55′30"	50.67′	100.51′
K	62.58′	17°40′21"	9.73′	19.30′
L	295.28′	17°55′30"	46.57′	92.38′
M	88.58′	76°41′13"	70.07′	118.56′

PRELIMINARY INVESTIGATION SECTION

SCALE 1"=20′	VERT.DATUM Assumed	PHOTOGRAMMETRY AS OF: X			
	HORZ.DATUM Assumed	SURVEYED	BY District/Pallares	CHECKED	BY X
	ALIGNMENT TIES Dist.Traverse Sheet	DRAFTED	BY T.Zolnikov 02/2010	CHECKED	BY X

DESIGN	BY H. Singh	CHECKED	S. Hamoud
DETAILS	BY Min Yu	CHECKED	S. Hamoud
QUANTITIES	BY H. Singh	CHECKED	A. Jenabzadeh

STATE OF CALIFORNIA
DEPARTMENT OF TRANSPORTATION

DIVISION OF ENGINEERING SERVICES
STRUCTURE DESIGN
DESIGN BRANCH 16

BRIDGE NO. 20E0031
POST MILE 27.1/27.3

RETAINING WALL
FOUNDATION PLAN NO. 2

STRUCTURES FOUNDATION PLAN SHEET (ENGLISH) (REV. 10/25/05)

ORIGINAL SCALE IN INCHES FOR REDUCED PLANS 0 1 2 3

CU 04
EA 3S7401

DISREGARD PRINTS BEARING EARLIER REVISION DATES → 02/28/10 03/01/10

REVISION DATES

SHEET 7 OF 16

FILE => 20e0031-e-fp02.dgn

USERNAME => trphilis DATE PLOTTED => 15-JUL-2010 TIME PLOTTED => 09:47

DIST	COUNTY	ROUTE	POST MILES TOTAL PROJECT	SHEET No	TOTAL SHEETS
04	Son	1	27.2	51	59

REGISTERED CIVIL ENGINEER 04-06-10 DATE

7-12-10
PLANS APPROVAL DATE

REGISTERED PROFESSIONAL ENGINEER HARDEEP SINGH No. 74410 Exp. 9-30-11 CIVIL STATE OF CALIFORNIA

The State of California or its officers or agents shall not be responsible for the accuracy or completeness of electronic copies of this plan sheet.

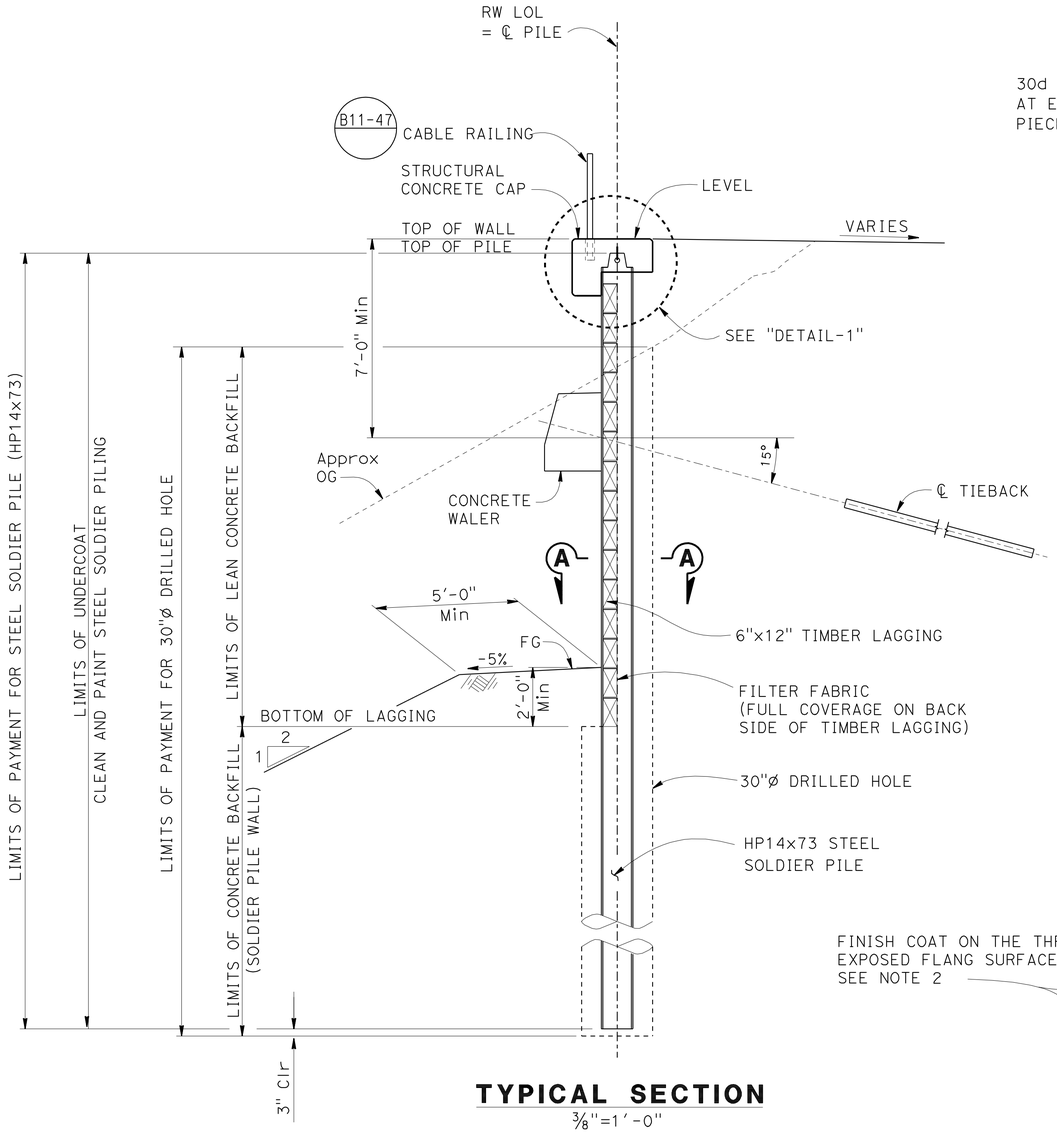

TYPICAL SECTION

3/8"=1'-0"

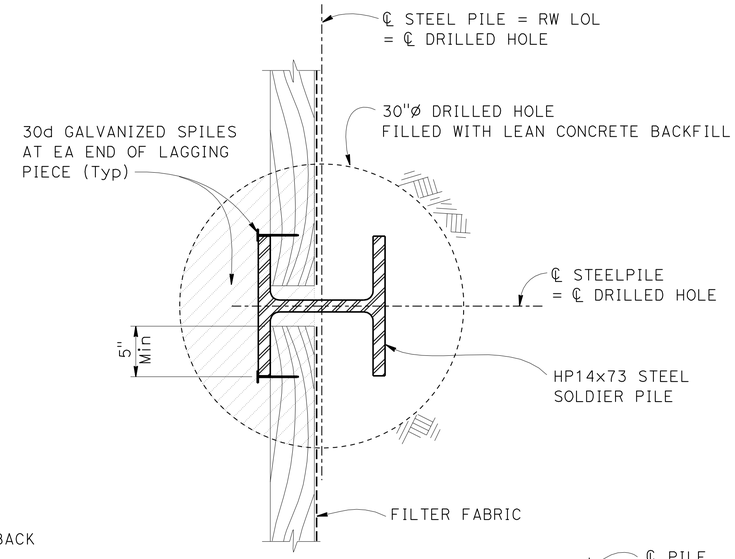

SECTION A-A

1 1/2"=1'-0"

LIMITS OF REMOVAL OF
LEAN CONCRETE BACKFILL

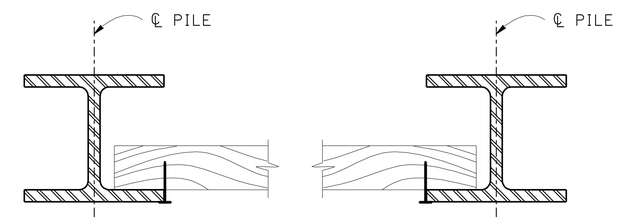

PARTIAL PLAN

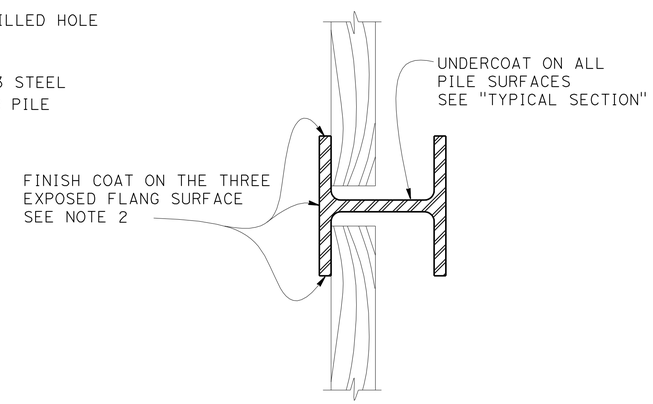

LIMITS OF CLEAN AND PAINT STEEL SOLDIER PILING

1 1/2"=1'-0"

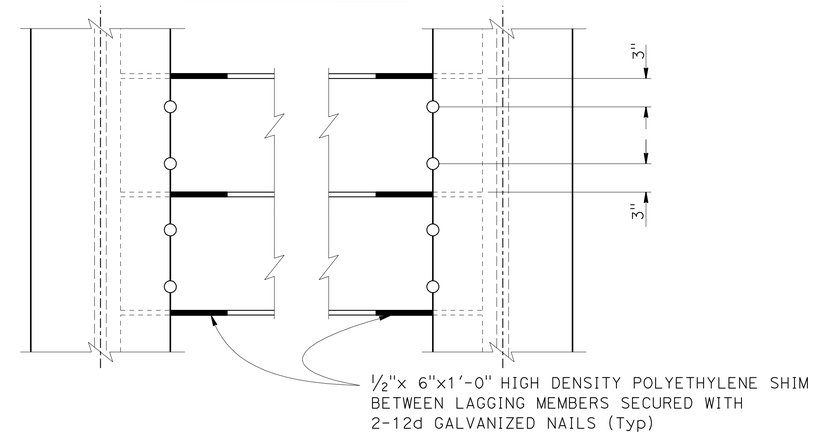

PARTIAL ELEVATION LAGGING DETAILS

1 1/2"=1'-0"

NOTES:

1. For "DETAIL-1", See "RETAINING WALL DETAILS NO. 2" Sheet.
2. Finish Coat Limits are from bottom of Concrete Cap to bottom of lagging.
3. No clipping of lagging corners allowed.

DESIGN	BY H. Singh	CHECKED S. Hamoud	
DETAILS	BY Min Yu	CHECKED S. Hamoud	
QUANTITIES	BY H. Singh	CHECKED A. Jenabzadeh	

STATE OF CALIFORNIA
DEPARTMENT OF TRANSPORTATION

DIVISION OF ENGINEERING SERVICES
STRUCTURE DESIGN
DESIGN BRANCH 16

BRIDGE NO. 20E0031
POST MILE 27.1/27.3

RETAINING WALL
RETAINING WALL DETAILS NO. 1

STRUCTURES DESIGN DETAIL SHEET (ENGLISH) (REV. 10/25/05)

ORIGINAL SCALE IN INCHES FOR REDUCED PLANS 0 1 2 3

CU 04
EA 3S7401

DISREGARD PRINTS BEARING EARLIER REVISION DATES → 02/01/10 03/18/10 03/29/10

REVISION DATES

SHEET 8 OF 16

FILE => 20e0031-g-rwdt01.dgn

USERNAME => trpbtis DATE PLOTTED => 15-JUL-2010 TIME PLOTTED => 08:58

DIST	COUNTY	ROUTE	POST MILES TOTAL PROJECT	SHEET No	TOTAL SHEETS
04	Son	1	27.2	52	59

REGISTERED CIVIL ENGINEER 04-06-10 DATE

7-12-10
PLANS APPROVAL DATE

REGISTERED PROFESSIONAL ENGINEER HARDEEP SINGH No. 74410 Exp. 9-30-11 CIVIL STATE OF CALIFORNIA

The State of California or its officers or agents shall not be responsible for the accuracy or completeness of electronic copies of this plan sheet.

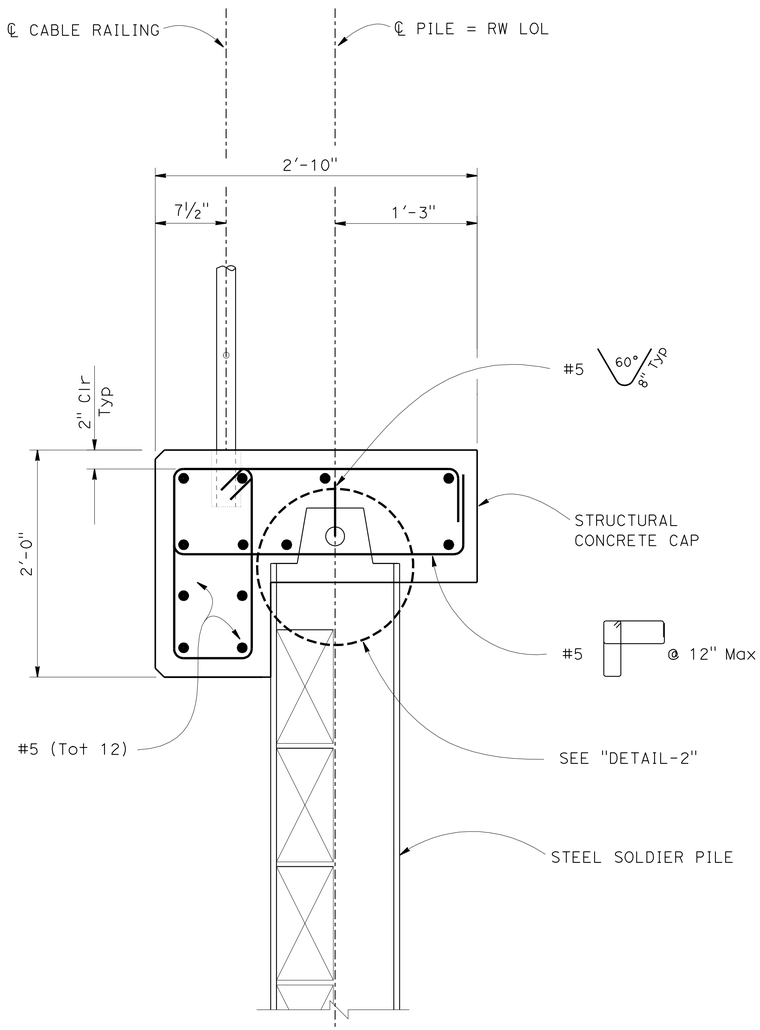

DETAIL-1
STRUCTURAL CONCRETE CAP DETAILS

1½"=1'-0"

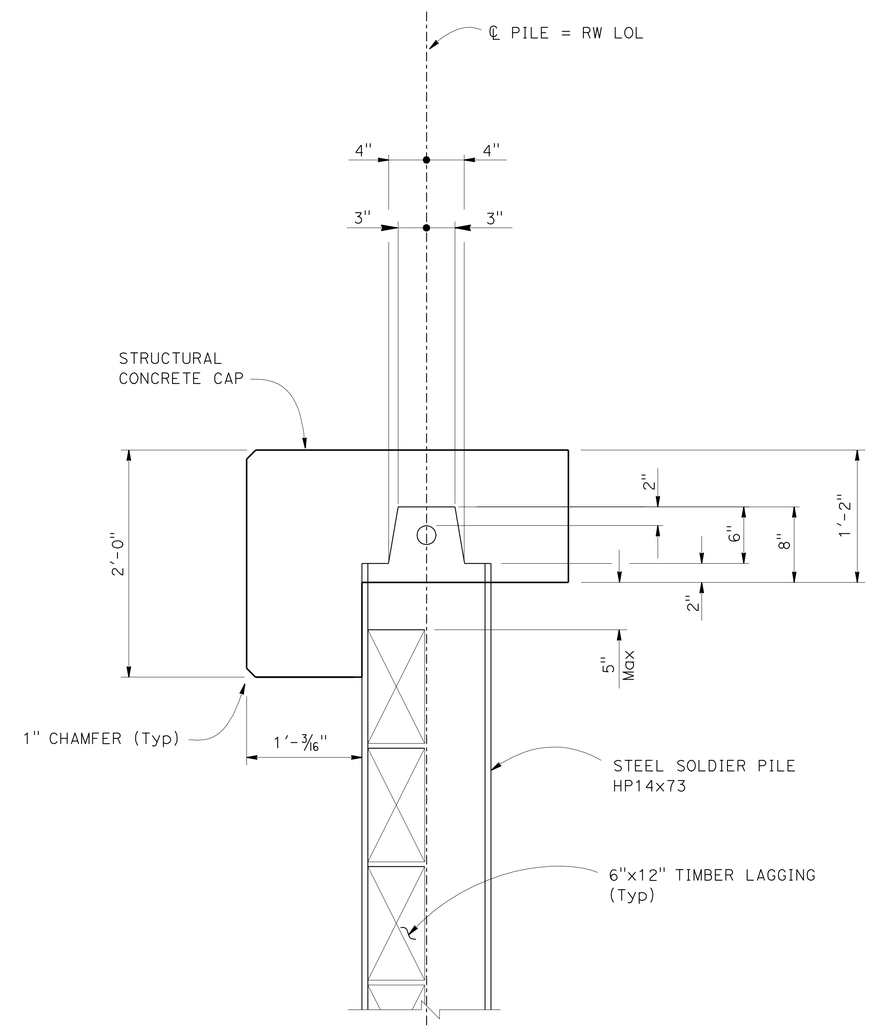

DETAIL-2
STEEL SOLDIER PILE DETAILS

1½"=1'-0"

DESIGN	BY H. Singh	CHECKED S. Hamoud	
DETAILS	BY Min Yu	CHECKED S. Hamoud	
QUANTITIES	BY H. Singh	CHECKED A. Jenabzadeh	

STATE OF CALIFORNIA
DEPARTMENT OF TRANSPORTATION

DIVISION OF ENGINEERING SERVICES
STRUCTURE DESIGN
DESIGN BRANCH 16

BRIDGE NO. 20E0031
POST MILE 27.1/27.3

RETAINING WALL
RETAINING WALL DETAILS NO. 2

STRUCTURES DESIGN DETAIL SHEET (ENGLISH) (REV. 10/25/05)

ORIGINAL SCALE IN INCHES FOR REDUCED PLANS 0 1 2 3

CU 04
EA 3S7401

DISREGARD PRINTS BEARING EARLIER REVISION DATES → 02/01/10 03/10/10

REVISION DATES

SHEET 9 OF 16

FILE => 20e0031-g-rwdt02.dgn

USERNAME => trmikes1 DATE PLOTTED => 24-AUG-2010 TIME PLOTTED => 13:03

DIST	COUNTY	ROUTE	POST MILES TOTAL PROJECT	SHEET No	TOTAL SHEETS
04	Son	1	27.2	53	59

REGISTERED CIVIL ENGINEER 04-06-10 DATE

7-12-10
PLANS APPROVAL DATE

REGISTERED PROFESSIONAL ENGINEER HARDEEP SINGH No. 74410 Exp. 9-30-11 CIVIL STATE OF CALIFORNIA

The State of California or its officers or agents shall not be responsible for the accuracy or completeness of electronic copies of this plan sheet.

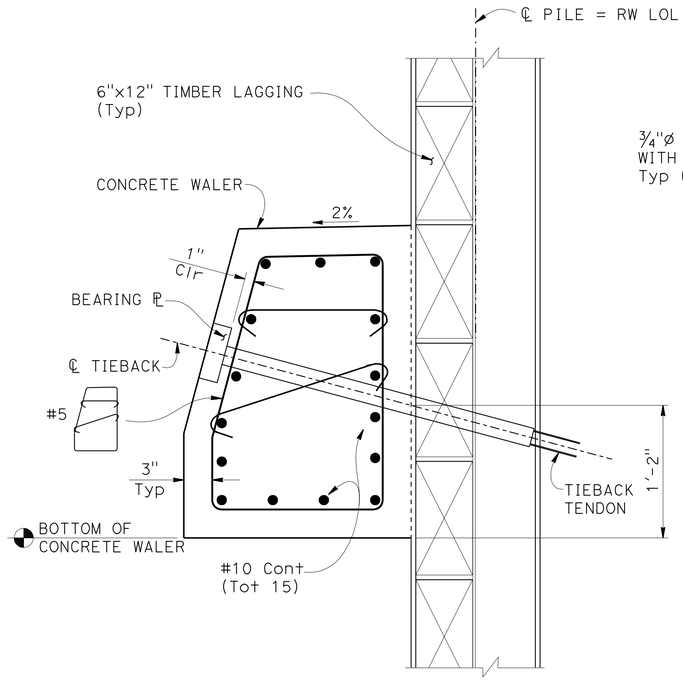

SECTION A-A
WALER SECTION AT TIEBACK TENDON
1½"=1'-0"

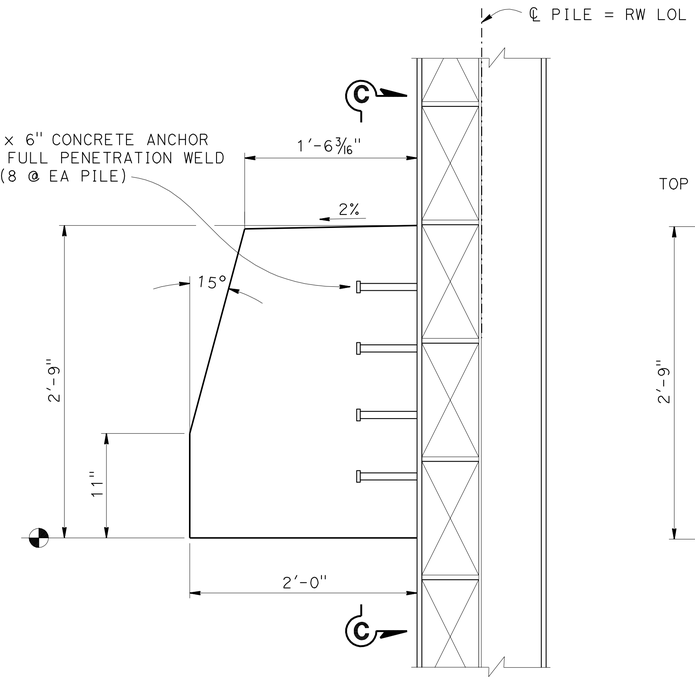

SECTION B-B
WALER SECTION AT PILE
1½"=1'-0"

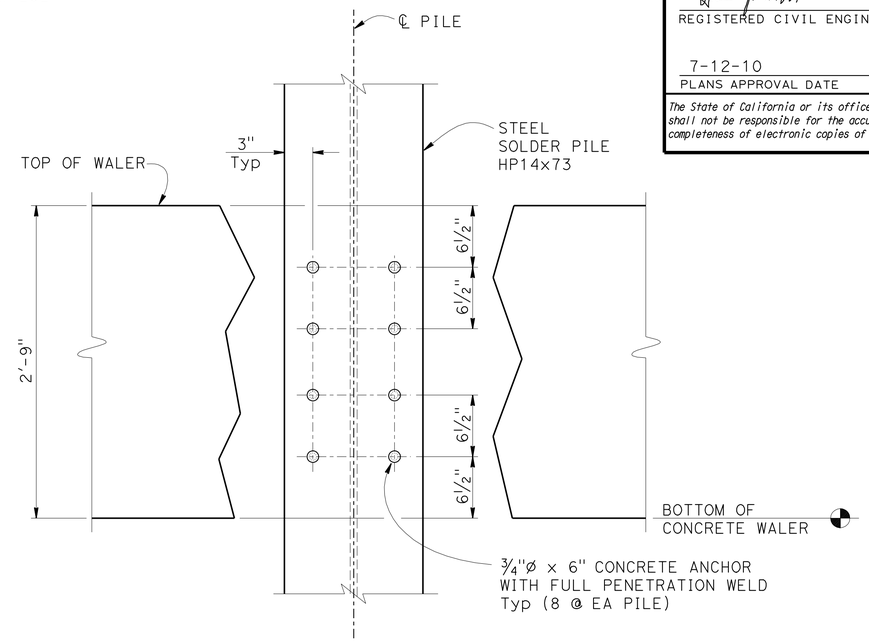

SECTION C-C
CONCRETE ANCHORAGE DETAIL
1½"=1'-0"

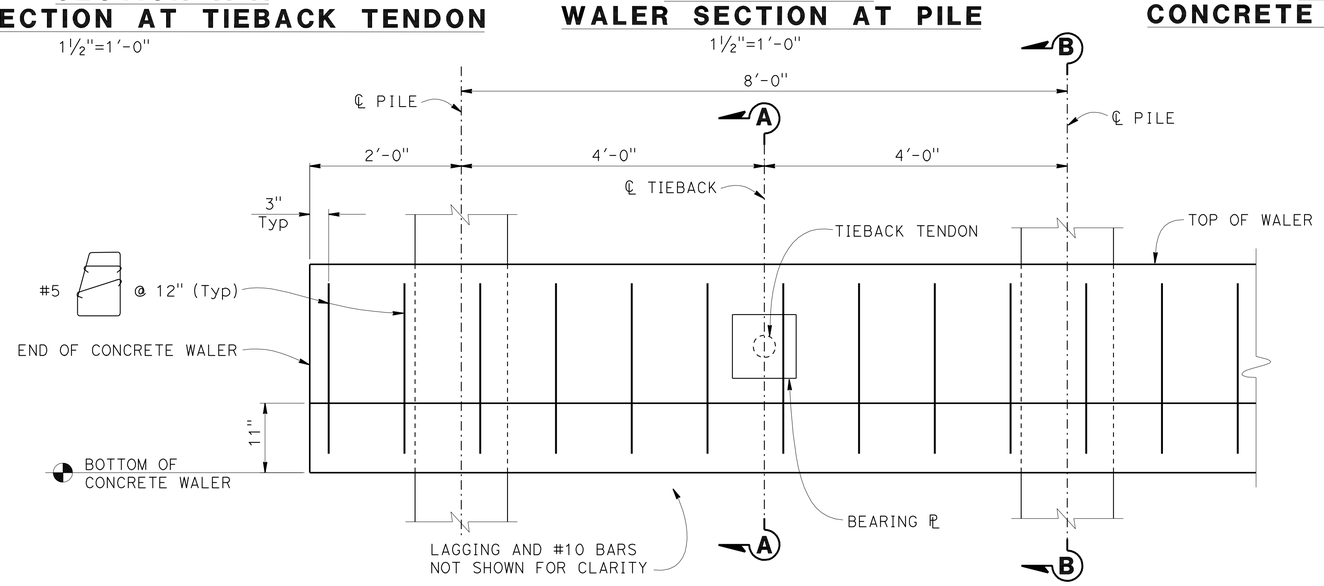

CONCRETE WALER PARTIAL ELEVATION
1"=1'-0"

NOTES:

1. Omit Gap Between Lagging Members at Joints Behind Concrete Waler.
2. Anchorage Assembly and Achorage Enclosure Shall be Galvanized.

DESIGN	BY H. Singh	CHECKED S. Hamoud	
DETAILS	BY Min Yu	CHECKED S. Hamoud	
QUANTITIES	BY H. Singh	CHECKED A. Jenabzadeh	

STATE OF CALIFORNIA
DEPARTMENT OF TRANSPORTATION

DIVISION OF ENGINEERING SERVICES
STRUCTURE DESIGN
DESIGN BRANCH 16

BRIDGE NO. 20E0031
POST MILE 27.1/27.3

RETAINING WALL
RETAINING WALL DETAILS NO. 3

STRUCTURES DESIGN DETAIL SHEET (ENGLISH) (REV. 10/25/05)

ORIGINAL SCALE IN INCHES FOR REDUCED PLANS 0 1 2 3

CU 04
EA 3S7401

DISREGARD PRINTS BEARING EARLIER REVISION DATES

REVISION DATES: 02/02/10

SHEET 10 OF 16

FILE => 20e0031-g-rwdt03.dgn

USERNAME => trmikesi DATE PLOTTED => 24-AUG-2010 TIME PLOTTED => 13:04

DIST	COUNTY	ROUTE	POST MILES TOTAL PROJECT	SHEET No	TOTAL SHEETS
04	Son	1	27.2	54	59

REGISTERED CIVIL ENGINEER 04-06-10 DATE

7-12-10
PLANS APPROVAL DATE

REGISTERED PROFESSIONAL ENGINEER HARDEEP SINGH No. 74410 Exp. 9-30-11 CIVIL STATE OF CALIFORNIA

The State of California or its officers or agents shall not be responsible for the accuracy or completeness of electronic copies of this plan sheet.

NOTES:
1. Anchorage enclosure shall only be used when anchor head assembly is not enclosed in concrete.
2. Anchorage enclosure shall have provisions to allow injecting grout at low end and venting at high end. Galvanize after fabrication.
3. Silicone sealant to cover full width of flange.
4. Steel tube welded to bearing plate (min thickness =1/4"). Galvanize assembly after fabrication.
5. Steel tube welded to bearing plate inside diameter of steel tube to be 1" greater than outside diameter of smooth sheathing (min thickness = 1/4") Galvanize assembly after fabrication.
6. For other wall details, see structural plans.

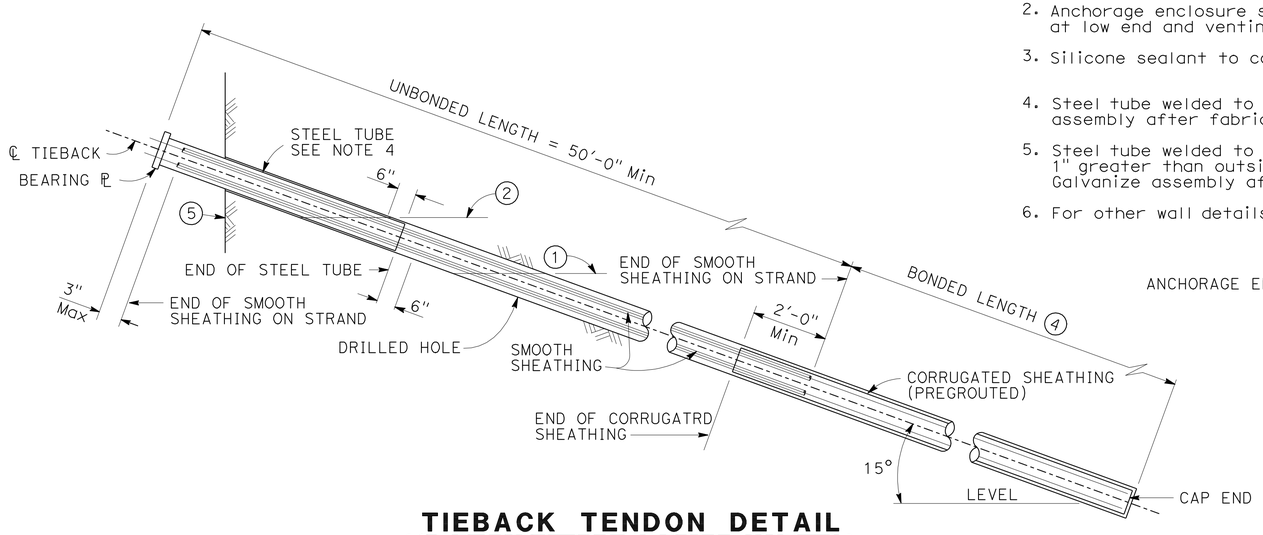

TIEBACK TENDON DETAIL (STRAND)-(ALTERNATIVE A)

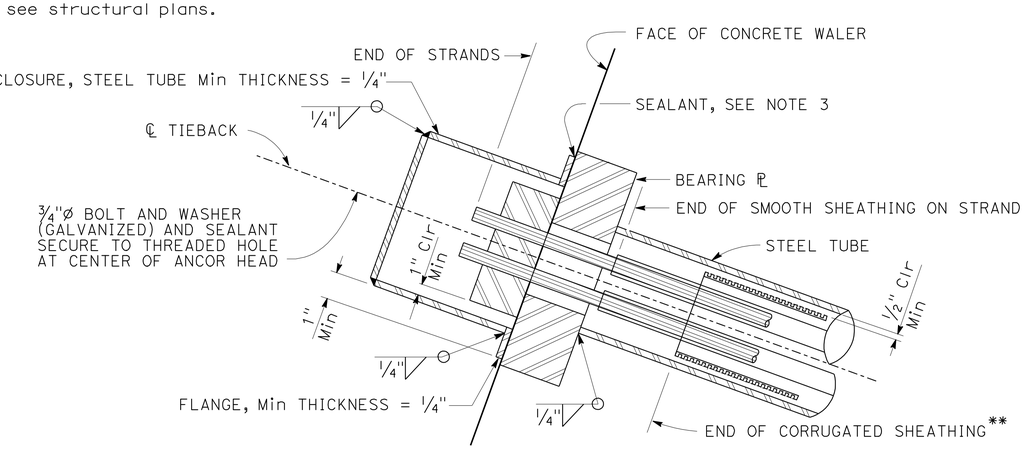

ALTERNATIVE X

** ALTERNATIVE B TENDON ONLY

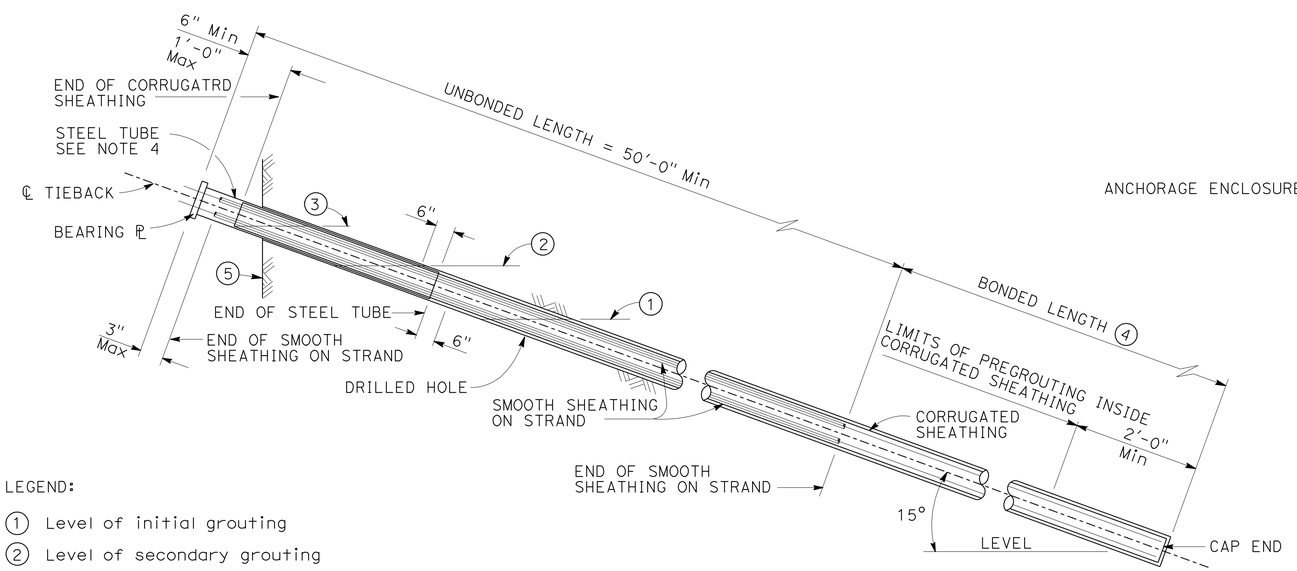

TIEBACK TENDON DETAIL (STRAND)-(ALTERNATIVE B)

LEGEND:

1. Level of initial grouting
2. Level of secondary grouting
3. Level of initial grouting inside corrugated sheathing
4. Bonded length shall be determined by the contractor
5. Face of Wall Excavation

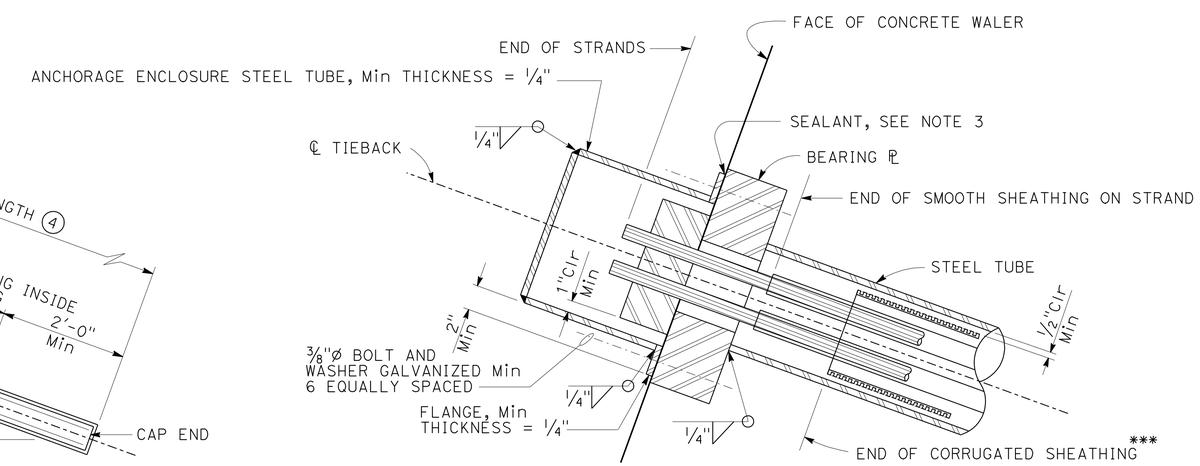

ALTERNATIVE Y

*** ALTERNATIVE B TENDON ONLY

ANCHORAGE ENCLOSURE DETAILS

DESIGN	BY H. Singh	CHECKED S. Hamoud	
DETAILS	BY Min Yu	CHECKED S. Hamoud	
QUANTITIES	BY H. Singh	CHECKED A. Jenabzadeh	

STATE OF CALIFORNIA DEPARTMENT OF TRANSPORTATION

DIVISION OF ENGINEERING SERVICES STRUCTURE DESIGN DESIGN BRANCH 16

BRIDGE NO. 20E0031
POST MILE 27.1/27.3

RETAINING WALL
RETAINING WALL DETAILS NO. 4

STRUCTURES DESIGN DETAIL SHEET (ENGLISH) (REV. 10/25/05)

ORIGINAL SCALE IN INCHES FOR REDUCED PLANS 0 1 2 3

CU 04
EA 3S7401

DISREGARD PRINTS BEARING EARLIER REVISION DATES 02/03/10

REVISION DATES

SHEET 11 OF 16

FILE => 20e0031-g-rwdt04.dgn

USERNAME => ttmirkes1 DATE PLOTTED => 24-AUG-2010 TIME PLOTTED => 13:04

DIST	COUNTY	ROUTE	POST MILES TOTAL PROJECT	SHEET No	TOTAL SHEETS
04	Son	1	27.2	55	59

Ali Kaddoura 3-8-10
REGISTERED CIVIL ENGINEER

7-12-10
PLANS APPROVAL DATE

The State of California or its officers or agents shall not be responsible for the accuracy or completeness of electronic copies of this plan sheet.

REGISTERED PROFESSIONAL ENGINEER
ALI K. KADDOURA
No. 55710
Exp. 12-31-10
CIVIL
STATE OF CALIFORNIA

This LOTB sheet was prepared in accordance with the Caltrans Soil & Rock Logging; Classification; & Presentation Manual (June 2007), except for Borings P-1(Auger), P-1 (Rotary), and P-2 (Auger).

BENCH MARK

PRHV-6
Fnd Set 1"IP w/ PP
25.50 FT Lt ℄ Rte 1
Sta 0+80.94
N 5,766.87
E 6,525.14
Elev = 658.28′

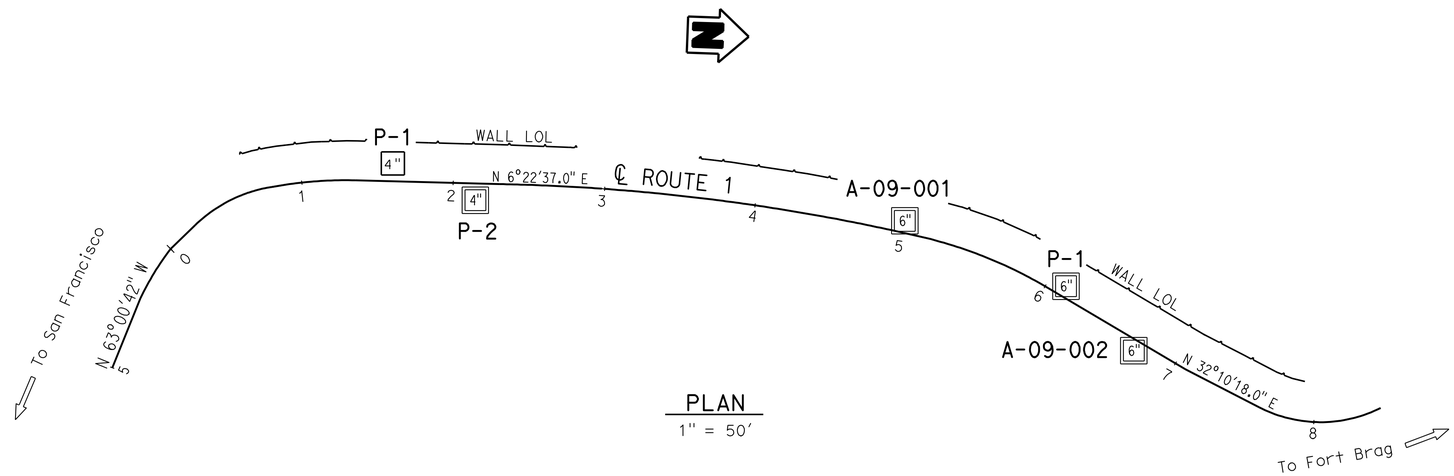

PLAN
1" = 50′

NOTE:

No ground water encountered during field investigation.

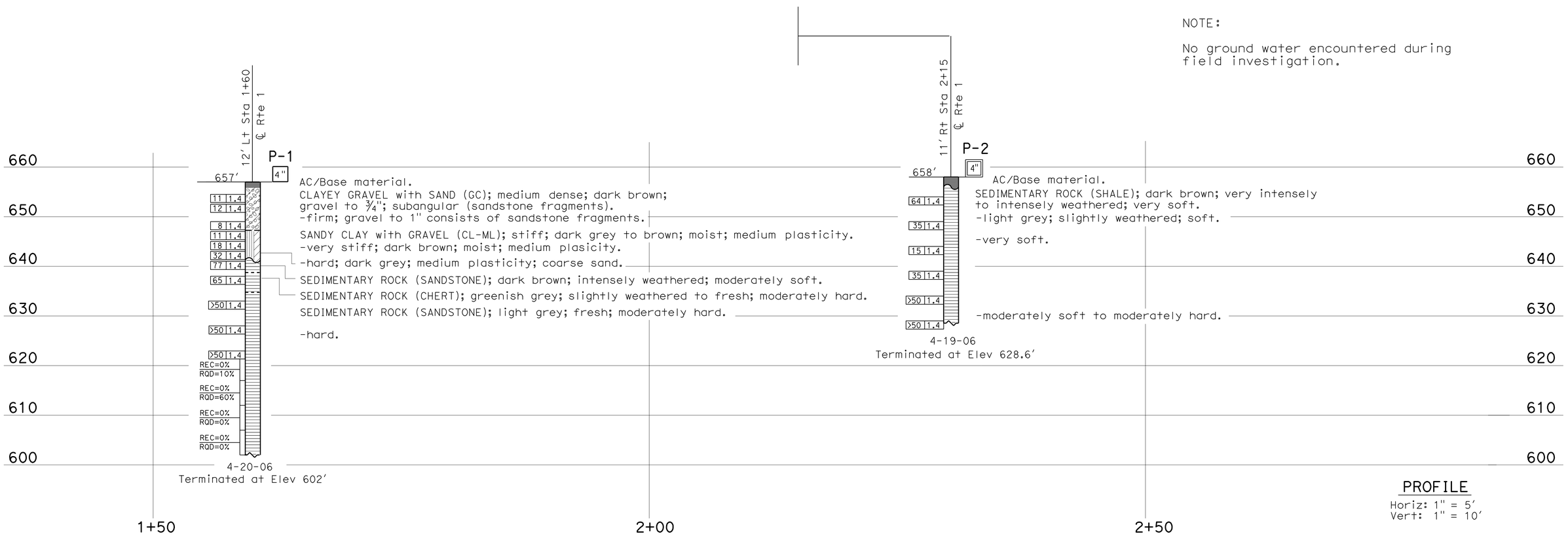

PROFILE
Horiz: 1" = 5′
Vert: 1" = 10′

ENGINEERING SERVICES	GEOTECHNICAL SERVICES	STATE OF CALIFORNIA DEPARTMENT OF TRANSPORTATION	DIVISION OF ENGINEERING SERVICES STRUCTURE DESIGN DESIGN BRANCH	BRIDGE NO. 20E0031	RETAINING WALL
FUNCTIONAL SUPERVISOR	DRAWN BY: I.G-Remmen; 3/10	FIELD INVESTIGATION BY:		POST MILES 27.1/27.3	LOG OF TEST BORINGS (1 OF 5)
NAME: H. Nikoui	CHECKED BY: C. Risden	A. Kaddoura / M. Zabolzadeh			

OGS CIVIL LOG OF TEST BORINGS SHEET

ORIGINAL SCALE IN INCHES FOR REDUCED PLANS 0 1 2 3

CU 04
EA 3S7401

DISREGARD PRINTS BEARING EARLIER REVISION DATES → 03-15-10

REVISION DATES

SHEET 12 OF 16

FILE => 20e0031-z-ltb01.dgn

USERNAME => trmikest DATE PLOTTED => 24-AUG-2010 TIME PLOTTED => 13:04

DIST	COUNTY	ROUTE	POST MILES TOTAL PROJECT	SHEET No	TOTAL SHEETS
04	Son	1	27.2	56	59

Ali Kaddoura 3-8-10
REGISTERED CIVIL ENGINEER

7-12-10
PLANS APPROVAL DATE

REGISTERED PROFESSIONAL ENGINEER
ALI K. KADDOURA
No. 55710
Exp. 12-31-10
CIVIL
STATE OF CALIFORNIA

The State of California or its officers or agents shall not be responsible for the accuracy or completeness of electronic copies of this plan sheet.

This LOTB sheet was prepared in accordance with the Caltrans Soil & Rock Logging; Classification; & Presentation Manual (June 2007), except for Borings P-1(Auger), P-1 (Rotary), and P-2 (Auger).

FOR PLAN VIEW, SEE
"LOG OF TEST BORINGS 1 OF 5"

NOTE:

NO GROUND WATER ENCOUNTERED DURING FIELD INVESTIGATION.

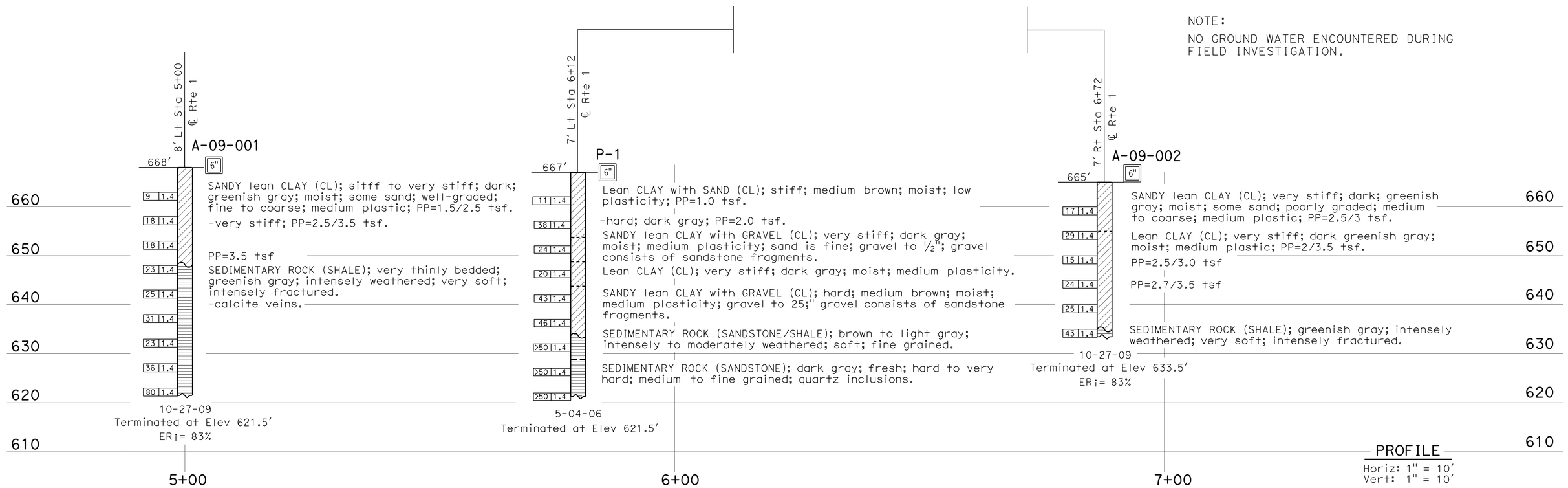

ENGINEERING SERVICES	GEOTECHNICAL SERVICES	STATE OF CALIFORNIA DEPARTMENT OF TRANSPORTATION	DIVISION OF ENGINEERING SERVICES STRUCTURE DESIGN DESIGN BRANCH	BRIDGE NO. 20E0031 POST MILES 27.1/27.3	RETAINING WALL LOG OF TEST BORINGS (2 OF 5)
FUNCTIONAL SUPERVISOR NAME; H. Nikoui	DRAWN BY; I.G-Remmen; 3/10 CHECKED BY; C. Risden	FIELD INVESTIGATION BY; A. Kaddoura			

OGS CIVIL LOG OF TEST BORINGS SHEET

ORIGINAL SCALE IN INCHES FOR REDUCED PLANS 0 1 2 3

CU 04
EA 3S7401

DISREGARD PRINTS BEARING EARLIER REVISION DATES → 03-15-10

REVISION DATES

SHEET 13 OF 16

FILE => 20e0031-z-1tb02.dgn

USERNAME => ttmcrtin DATE PLOTTED => 15-JUL-2010 TIME PLOTTED => 08:51

DIST	COUNTY	ROUTE	POST MILES TOTAL PROJECT	SHEET No	TOTAL SHEETS
04	Son	1	27.2	57	59

Ali Kaddoura 3-8-10
REGISTERED CIVIL ENGINEER

7-12-10
PLANS APPROVAL DATE

REGISTERED PROFESSIONAL ENGINEER
ALI K. KADDOUR
No. 55710
Exp. 12-31-10
CIVIL
STATE OF CALIFORNIA

The State of California or its officers or agents shall not be responsible for the accuracy or completeness of electronic copies of this plan sheet.

REFERENCE: CALTRANS SOIL & ROCK LOGGING, CLASSIFICATION, AND PRESENTATION MANUAL (JUNE 2007).

CEMENTATION

Description	Criteria
Weak	Crumbles or breaks with handling or little finger pressure.
Moderate	Crumbles or breaks with considerable finger pressure.
Strong	Will not crumble or break with finger pressure.

CONSISTENCY OF COHESIVE SOILS

Description	Unconfined Compressive Strength (tsf)	Pocket Penetrometer Measurement (tsf)	Torvane Measurement (tsf)	Field Approximation
Very Soft	< 0.25	< 0.25	< 0.12	Easily penetrated several inches by fist
Soft	0.25 to 0.50	0.25 to 0.50	0.12 to 0.25	Easily penetrated several inches by thumb
Medium Stiff	0.50 to 1.0	0.50 to 1.0	0.25 to 0.50	Penetrated several inches by thumb with moderate effort
Stiff	1 to 2	1 to 2	0.50 to 1.0	Readily indented by thumb but penetrated only with great effort
Very Stiff	2 to 4	2 to 4	1.0 to 2.0	Readily indented by thumbnail
Hard	> 4.0	> 4.0	> 2.0	Indented by thumbnail with difficulty

BOREHOLE IDENTIFICATION

Symbol	Hole Type	Description
Size	A	Auger Boring
Size	R P	Rotary drilled boring Rotary percussion boring (air)
Size	R	Rotary drilled diamond core
Size	HD HA	Hand driven (1-inch soil tube) Hand Auger
●	D	Dynamic Cone Penetration Boring
▲	CPT	Cone Penetration Test (ASTM D 5778-95)
⬚	O	Other

Note: Size in inches.

PLASTICITY OF FINE-GRAINED SOILS

Description	Criteria
Nonplastic	A 1/8-inch thread cannot be rolled at any water content.
Low	The thread can barely be rolled and the lump cannot be formed when drier than the plastic limit.
Medium	The thread is easy to roll and not much time is required to reach the plastic limit. The thread cannot be rerolled after reaching the plastic limit. The lump crumbles when drier than the plastic limit.
High	It takes considerable time rolling and kneading to reach the plastic limit. The thread can be rerolled several times after reaching the plastic limit. The lump can be formed without crumbling when drier than the plastic limit.

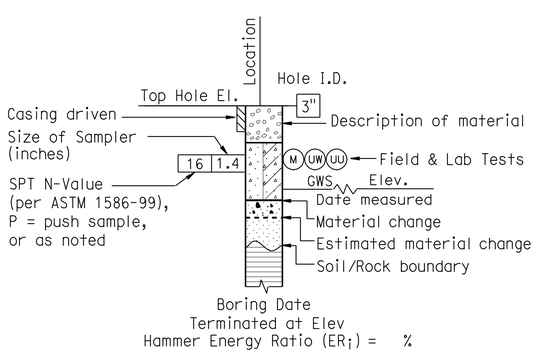

ROTARY BORING

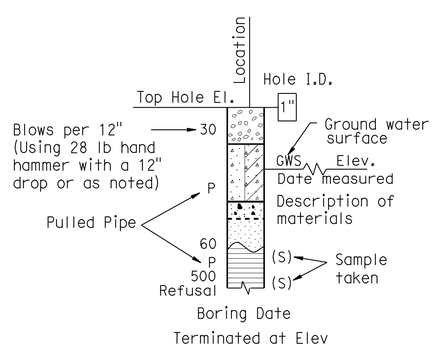

HAND BORING

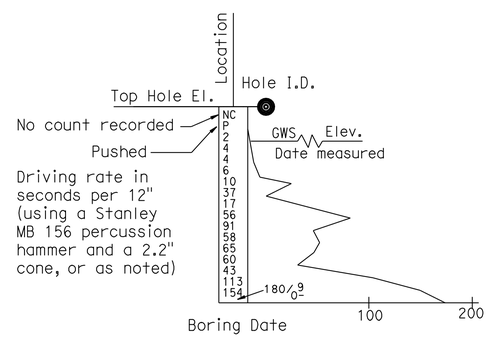

DYNAMIC CONE PENETRATION BORING

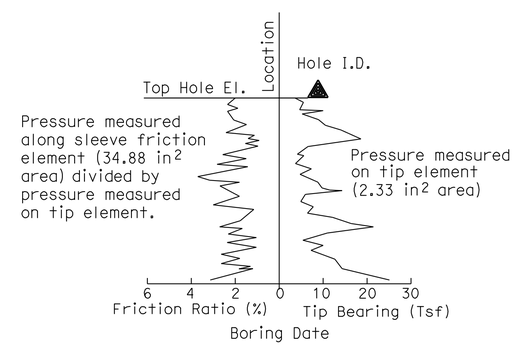

CONE PENETRATION TEST (CPT) SOUNDING

ENGINEERING SERVICES	GEOTECHNICAL SERVICES	STATE OF CALIFORNIA DEPARTMENT OF TRANSPORTATION	DIVISION OF ENGINEERING SERVICES STRUCTURE DESIGN DESIGN BRANCH	BRIDGE NO. 20E0031 / POST MILE 27.1/27.3	RETAINING WALL LOG OF TEST BORINGS (3 OF 5)
	PREPARED BY: I.G-Remmen				

GS LOTB SOIL LEGEND

ORIGINAL SCALE IN INCHES FOR REDUCED PLANS 0 1 2 3

CU 04
EA 3S7401

DISREGARD PRINTS BEARING EARLIER REVISION DATES

REVISION DATES

SHEET 14 OF 16

FILE => 20e0031-z-1tb03.dgn

USERNAME => ttmartin DATE PLOTTED => 15-JUL-2010 TIME PLOTTED => 08:51

REFERENCE: CALTRANS SOIL & ROCK LOGGING, CLASSIFICATION, AND PRESENTATION MANUAL (JUNE 2007).

DIST	COUNTY	ROUTE	POST MILES TOTAL PROJECT	SHEET No	TOTAL SHEETS
04	Son	1	27.2	58	59

Ali Kaddoura 3-8-10
REGISTERED CIVIL ENGINEER

7-12-10
PLANS APPROVAL DATE

REGISTERED PROFESSIONAL ENGINEER
ALI K. KADDOURA
No. 55710
Exp. 12-31-10
CIVIL
STATE OF CALIFORNIA

The State of California or its officers or agents shall not be responsible for the accuracy or completeness of electronic copies of this plan sheet.

GROUP SYMBOLS AND NAMES

Graphic/Symbol	Group Names	Graphic/Symbol	Group Names
GW	Well-graded GRAVEL Well-graded GRAVEL with SAND	CL	Lean CLAY Lean CLAY with SAND Lean CLAY with GRAVEL SANDY lean CLAY SANDY lean CLAY with GRAVEL GRAVELLY lean CLAY GRAVELLY lean CLAY with SAND
GP	Poorly graded GRAVEL Poorly graded GRAVEL with SAND		
GW-GM	Well-graded GRAVEL with SILT Well-graded GRAVEL with SILT and SAND	CL-ML	SILTY CLAY SILTY CLAY with SAND SILTY CLAY with GRAVEL SANDY SILTY CLAY SANDY SILTY CLAY with GRAVEL GRAVELLY SILTY CLAY GRAVELLY SILTY CLAY with SAND
GW-GC	Well-graded GRAVEL with CLAY (or SILTY CLAY) Well-graded GRAVEL with CLAY and SAND (or SILTY CLAY and SAND)		
GP-GM	Poorly graded GRAVEL with SILT Poorly graded GRAVEL with SILT and SAND	ML	SILT SILT with SAND SILT with GRAVEL SANDY SILT SANDY SILT with GRAVEL GRAVELLY SILT GRAVELLY SILT with SAND
GP-GC	Poorly graded GRAVEL with CLAY (or SILTY CLAY) Poorly graded GRAVEL with CLAY and SAND (or SILTY CLAY and SAND)		
GM	SILTY GRAVEL SILTY GRAVEL with SAND	OL	ORGANIC lean CLAY ORGANIC lean CLAY with SAND ORGANIC lean CLAY with GRAVEL SANDY ORGANIC lean CLAY SANDY ORGANIC lean CLAY with GRAVEL GRAVELLY ORGANIC lean CLAY GRAVELLY ORGANIC lean CLAY with SAND
GC	CLAYEY GRAVEL CLAYEY GRAVEL with SAND		
GC-GM	SILTY, CLAYEY GRAVEL SILTY, CLAYEY GRAVEL with SAND	OL	ORGANIC SILT ORGANIC SILT with SAND ORGANIC SILT with GRAVEL SANDY ORGANIC SILT SANDY ORGANIC SILT with GRAVEL GRAVELLY ORGANIC SILT GRAVELLY ORGANIC SILT with SAND
SW	Well-graded SAND Well-graded SAND with GRAVEL		
SP	Poorly graded SAND Poorly graded SAND with GRAVEL	CH	Fat CLAY Fat CLAY with SAND Fat CLAY with GRAVEL SANDY fat CLAY SANDY fat CLAY with GRAVEL GRAVELLY fat CLAY GRAVELLY fat CLAY with SAND
SW-SM	Well-graded SAND with SILT Well-graded SAND with SILT and GRAVEL		
SW-SC	Well-graded SAND with CLAY (or SILTY CLAY) Well-graded SAND with CLAY and GRAVEL (or SILTY CLAY and GRAVEL)	MH	Elastic SILT Elastic SILT with SAND Elastic SILT with GRAVEL SANDY elastic SILT SANDY elastic SILT with GRAVEL GRAVELLY elastic SILT GRAVELLY elastic SILT with SAND
SP-SM	Poorly graded SAND with SILT Poorly graded SAND with SILT and GRAVEL		
SP-SC	Poorly graded SAND with CLAY (or SILTY CLAY) Poorly graded SAND with CLAY and GRAVEL (or SILTY CLAY and GRAVEL)	OH	ORGANIC fat CLAY ORGANIC fat CLAY with SAND ORGANIC fat CLAY with GRAVEL SANDY ORGANIC fat CLAY SANDY ORGANIC fat CLAY with GRAVEL GRAVELLY ORGANIC fat CLAY GRAVELLY ORGANIC fat CLAY with SAND
SM	SILTY SAND SILTY SAND with GRAVEL		
SC	CLAYEY SAND CLAYEY SAND with GRAVEL	OH	ORGANIC elastic SILT ORGANIC elastic SILT with SAND ORGANIC elastic SILT with GRAVEL SANDY ORGANIC elastic SILT SANDY ORGANIC elastic SILT with GRAVEL GRAVELLY ORGANIC elastic SILT GRAVELLY ORGANIC elastic SILT with SAND
SC-SM	SILTY, CLAYEY SAND SILTY, CLAYEY SAND with GRAVEL		
PT	PEAT	OL/OH	ORGANIC SOIL ORGANIC SOIL with SAND ORGANIC SOIL with GRAVEL SANDY ORGANIC SOIL SANDY ORGANIC SOIL with GRAVEL GRAVELLY ORGANIC SOIL GRAVELLY ORGANIC SOIL with SAND
	COBBLES COBBLES and BOULDERS BOULDERS		

FIELD AND LABORATORY TESTING

- (C) Consolidation (ASTM D 2435)
- (CL) Collapse Potential (ASTM D 5333)
- (CP) Compaction Curve (CTM 216)
- (CR) Corrosivity Testing (CTM 643, CTM 422, CTM 417)
- (CU) Consolidated Undrained Triaxial (ASTM D 4767)
- (DS) Direct Shear (ASTM D 3080)
- (EI) Expansion Index (ASTM D 4829)
- (M) Moisture Content (ASTM D 2216)
- (OC) Organic Content-% (ASTM D 2974)
- (P) Permeability (CTM 220)
- (PA) Particle Size Analysis (ASTM D 422)
- (PI) Plasticity Index (AASHTO T 90) Liquid Limit (AASHTO T 89)
- (PL) Point Load Index (ASTM D 5731)
- (PM) Pressure Meter
- (PP) Pocket Penetrometer
- (R) R-Value (CTM 301)
- (SE) Sand Equivalent (CTM 217)
- (SG) Specific Gravity (AASHTO T 100)
- (SL) Shrinkage Limit (ASTM D 427)
- (SW) Swell Potential (ASTM D 4546)
- (TV) Pocket Torvane
- (UC) Unconfined Compression-Soil (ASTM D 2166) Unconfined Compression-Rock (ASTM D 2938)
- (UU) Unconsolidated Undrained Triaxial (ASTM D 2850)
- (UW) Unit Weight (ASTM D 4767)
- (VS) Vane Shear (AASHTO T 223)

APPARENT DENSITY OF COHESIONLESS SOILS

Description	SPT N_{60} (Blows / 12 inches)
Very loose	0 - 4
Loose	5 - 10
Medium Dense	11 - 30
Dense	31 - 50
Very Dense	> 50

MOISTURE

Description	Criteria
Dry	Absence of moisture, dusty, dry to the touch
Moist	Damp but no visible water
Wet	Visible free water, usually soil is below water table

PERCENT OR PROPORTION OF SOILS

Description	Criteria
Trace	Particles are present but estimated to be less than 5%
Few	5 to 10%
Little	15 to 25%
Some	30 to 45%
Mostly	50 to 100%

PARTICLE SIZE

Description		Size
Boulder		> 12"
Cobble		3" to 12"
Gravel	Coarse	3/4" to 3"
	Fine	No. 4 to 3/4"
Sand	Coarse	No. 10 to No. 4
	Medium	No. 40 to No. 10
	Fine	No. 200 to No. 40

ENGINEERING SERVICES

GEOTECHNICAL SERVICES
PREPARED BY: I.G-Remmen

STATE OF CALIFORNIA
DEPARTMENT OF TRANSPORTATION

DIVISION OF ENGINEERING SERVICES
STRUCTURE DESIGN
DESIGN BRANCH

BRIDGE NO. 20E0031
POST MILE 27.1/27.3

RETAINING WALL
LOG OF TEST BORINGS (4 OF 5)

GS LOTB SOIL LEGEND

ORIGINAL SCALE IN INCHES FOR REDUCED PLANS 0 1 2 3

CU 04
EA 3S7401

DISREGARD PRINTS BEARING EARLIER REVISION DATES

REVISION DATES

SHEET 15 OF 16

FILE => 20e0031-z-ltb04.dgn

USERNAME => rtrmartin DATE PLOTTED => 15-JUL-2010 TIME PLOTTED => 08:51

DIST	COUNTY	ROUTE	POST MILES TOTAL PROJECT	SHEET No	TOTAL SHEETS
04	Son	1	27.2	59	59

Ali Kaddoura 3-8-10
REGISTERED CIVIL ENGINEER

7-12-10
PLANS APPROVAL DATE

The State of California or its officers or agents shall not be responsible for the accuracy or completeness of electronic copies of this plan sheet.

REGISTERED PROFESSIONAL ENGINEER ALI K. KADDOURA No. 55710 Exp. 12-31-10 CIVIL STATE OF CALIFORNIA

REFERENCE: CALTRANS SOIL & ROCK LOGGING, CLASSIFICATION, AND PRESENTATION MANUAL (JUNE 2007).

PERCENT CORE RECOVERY (REC) & ROCK QUALITY DESIGNATION (RQD)

$$REC = \frac{\sum \text{Length of the recovered core pieces (inches)}}{\text{Total length of core run (inches)}} \times 100\%$$

$$RQD = \frac{\sum \text{Length of intact core pieces} \geq 4''}{\text{Total length of core run (inches)}} \times 100\%$$

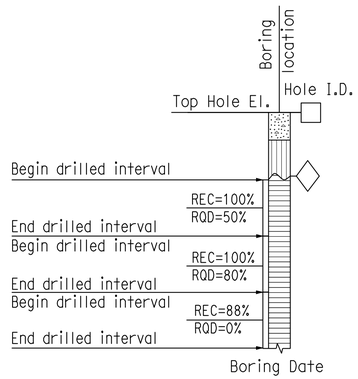

RELATIVE STRENGTH OF INTACT ROCK

Term	Uniaxial Compressive Strength (PSI)
Extremely Strong	> 30,000
Very Strong	14,500 - 30,000
Strong	7,000 - 14,500
Medium Strong	3,500 - 7,000
Weak	700 - 3,500
Very Weak	150 - 700
Extremely Weak	< 150

BEDDING SPACING

Description	Thickness / Spacing
Massive	Greater than 10 ft
Very thickly bedded	3 to 10 ft
Thickly bedded	1 to 3 ft
Moderately bedded	3-5/8" to 1 ft
Thinly bedded	1-1/4" to 3-5/8"
Very thinly bedded	3/8" to 1-1/4"
Laminated	Less than 3/8"

LEGEND OF ROCK MATERIALS

- IGNEOUS ROCK
- SEDIMENTARY ROCK
- METAMORPHIC ROCK

ROCK HARDNESS

Description	Criteria
Extremely Hard	Specimen cannot be scratched with a pocket knife or sharp pick; can only be chipped with repeated heavy hammer blows.
Very Hard	Specimen cannot be scratched with a pocket knife or sharp pick. Breaks with repeated heavy hammer blows.
Hard	Specimen can be scratched with a pocket knife or sharp pick with difficulty (heavy pressure). Heavy hammer blows required to break specimen.
Moderately Hard	Specimen can be scratched with pocket knife or sharp pick with light or moderate pressure. Core breaks with moderate hammer pressure.
Moderately Soft	Specimen can be grooved 1/6" deep with a pocket knife or sharp pick with moderate or heavy pressure. Breaks with light hammer blow or heavy manual pressure.
Soft	Specimen can be grooved or gouged easily by a pocket knife or sharp pick with light pressure, can be scratched with fingernail. Breaks with light to moderate manual pressure.
Very Soft	Specimen can be readily indented, grooved or gouged with fingernail, or carved with a pocket knife. Breaks with light manual pressure.

FRACTURE DENSITY

Description	Observed Fracture Density
Unfractured	No fractures.
Very slightly fractured	Lengths greater than 3 feet.
Slightly fractured	Lengths from 1 to 3 feet with few lengths less than 1 foot or greater than 3 feet.
Moderately fractured	Lengths mostly in 4" to 1 foot range with most lengths about 8"
Intensely fractured	Lengths average from 1 to 4" with scattered fragmented intervals with lengths less than 4"
Very intensely fractured	Mostly chips and fragments with a few scattered short core lengths.

Combination descriptors (such as "Very intensely to intensely fractured") are used where equal distribution of both fracture density characteristics is present over a significant interval or exposure, or where characteristics are "in between" the descriptor definitions. Only two adjacent descriptors may be combined.

WEATHERING DESCRIPTORS FOR INTACT ROCK

Description	Diagnostic features					General Characteristics
	Chemical Weathering-Discoloration and/or oxidation		Mechanical Weathering-Grain boundary conditions (disaggregation) primarily for granitics and some coarse-grained sediments	Texture and Solutioning		
	Body of Rock	Fracture Surfaces		Texture	Solutioning	
Fresh	No discoloration, not oxidized.	No discoloration or oxidation.	No separation, intact (tight).	No change.	No solutioning.	Hammer rings when crystalline rocks are struck.
Slightly Weathered	Discoloration or oxidation is limited to surface of, or short distance from, fractures; some feldspar crystals are dull.	Minor to complete discoloration or oxidation of most surfaces.	No visible separation, intact (tight).	Preserved.	Minor leaching of some soluble minerals may be noted.	Hammer rings when crystalline rocks are struck. Body of rock not weakened.
Moderately Weathered	Discoloration or oxidation extends from fractures usually throughout; Fe-Mg minerals are "rusty," feldspar crystals are "cloudy."	All fracture surfaces are discolored or oxidized.	Partial separation of boundaries visible.	Generally preserved.	Soluble minerals may be mostly leached.	Hammer does not ring when rock is struck. Body of rock is slightly weakened.
Intensely Weathered	Discoloration or oxidation throughout; all feldspars and Fe-Mg minerals are altered to clay to some extent; or chemical alteration produces in-situ disaggregation, see grain boundary conditions.	All fracture surfaces are discolored or oxidized, surfaces friable.	Partial separation, rock is friable; in semiarid conditions granitics are disaggregated.	Texture altered by chemical disintegration (hydration, argillation).	Leaching of soluble minerals may be complete.	Dull sound when struck with hammer, usually can be broken with moderate to heavy manual pressure or by light hammer blow without reference to planes of weakness such as incipient or hairline fractures, or veinlets. Rock is significantly weakened.
Decomposed	Discolored or oxidized throughout, but resistant minerals such as quartz may be unaltered; all feldspars and Fe-Mg minerals are completely altered to clay.		Complete separation of grain boundaries (disaggregated).	Resembles a soil, partial or complete remnant rock structure may be preserved; leaching of soluble minerals usually complete.		Can be granulated by hand. Resistant minerals such as quartz may be present as "stringers" or "dikes."

Combination descriptors (such as "slightly weathered to fresh") are permissible where equal distribution of both weathering characteristics is present over significant intervals or where characteristics present are "in between" the diagnostic feature. However, combination descriptors should not be used where significant, identifiable zones can be delineated. Only two adjacent descriptors may be combined. "Very intensely weathered" is the combination descriptor for "intensely weathered to decomposed."

ENGINEERING SERVICES	GEOTECHNICAL SERVICES	STATE OF CALIFORNIA DEPARTMENT OF TRANSPORTATION	DIVISION OF ENGINEERING SERVICES STRUCTURE DESIGN DESIGN BRANCH	BRIDGE NO. 20E0031 POST MILE 27.1/27.3	RETAINING WALL LOG OF TEST BORINGS (5 OF 5)
	PREPARED BY: I.G-Remmen, 3/10				

GS LOTB ROCK LEGEND

ORIGINAL SCALE IN INCHES FOR REDUCED PLANS 0 1 2 3

CU 04
EA 3S7401

DISREGARD PRINTS BEARING EARLIER REVISION DATES

REVISION DATES

SHEET 16 OF 16

FILE => 20e0031-z-ltb05.dgn

USERNAME => trmartin DATE PLOTTED => 15-JUL-2010 TIME PLOTTED => 08:51