INDEX OF PLANS

SHEET No.	DESCRIPTION
1	TITLE SHEET AND LOCATION MAP
2	CONSTRUCTION AREA SIGNS
3 - 6	REVISED STANDARD PLANS
7 - 20	STRUCTURE PLANS

THE STANDARD PLANS LIST APPLICABLE TO THIS CONTRACT IS INCLUDED IN THE NOTICE TO BIDDERS AND SPECIAL PROVISIONS BOOK.

STATE OF CALIFORNIA

DEPARTMENT OF TRANSPORTATION

PROJECT PLANS FOR CONSTRUCTION ON

STATE HIGHWAY

IN THE CITY AND COUNTY OF SAN FRANCISCO AT SAN FRANCISCO-OAKLAND BAY BRIDGE WEST BAY

TO BE SUPPLEMENTED BY STANDARD PLANS DATED 2010

Dist	COUNTY	ROUTE	POST MILES TOTAL PROJECT	SHEET No.	TOTAL SHEETS
04	SF	80	5.8/7.8	1	20

LOCATION MAP

SAN FRANCISCO

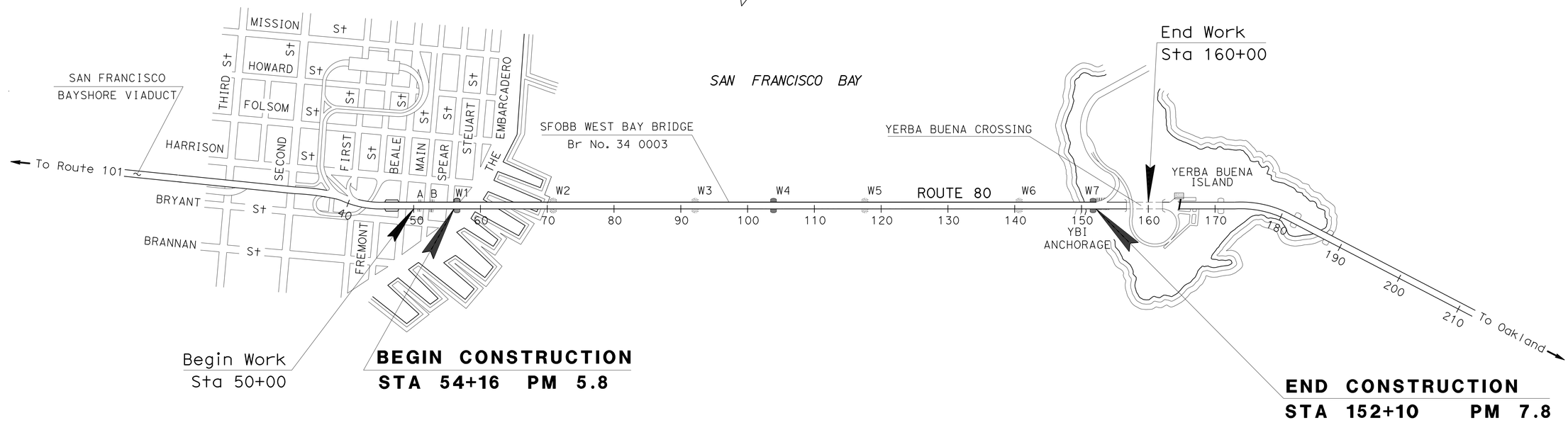

NO SCALE

THE CONTRACTOR SHALL POSSESS THE CLASS (OR CLASSES) OF LICENSE AS SPECIFIED IN THE "NOTICE TO BIDDERS."

10/29/13
PROJECT ENGINEER DATE
REGISTERED CIVIL ENGINEER

Gordon W. Jeong
No. 33151
Exp. 6-30-16
CIVIL
REGISTERED PROFESSIONAL ENGINEER
STATE OF CALIFORNIA

October 28, 2013
PLANS APPROVAL DATE

THE STATE OF CALIFORNIA OR ITS OFFICERS OR AGENTS SHALL NOT BE RESPONSIBLE FOR THE ACCURACY OR COMPLETENESS OF SCANNED COPIES OF THIS PLAN SHEET.

PROJECT MANAGER: KENNETH YOUNG
DESIGN MANAGER: LAWRENCE A. JONES

CONTRACT No.	04-3G4434
PROJECT ID	0412000043

LAST REVISION 10-25-13
DATE PLOTTED => 13-AUG-2014
TIME PLOTTED => 14:56

BORDER LAST REVISED 10/4/2013 | CALTRANS WEB SITE IS: HTTP//WWW.DOT.CA.GOV/ | RELATIVE BORDER SCALE IS IN INCHES 0 1 2 3 | USERNAME => s136183 DGN FILE => 0412000043ab001.dgn | UNIT 0700 | PROJECT NUMBER & PHASE 04120000431

CONSTRUCTION AREA SIGNS

SIGN No.	MUTCD CODE	PANEL SIZE	SIGN MESSAGE	NUMBER OF POSTS AND SIZE	NUMBER OF SIGNS
1	W20-1	48" x 48"	ROAD WORK AHEAD	1 - 4" x 4"	1
2	G20-2	36" x 18"	END ROAD WORK	1 - 4" x 4"	1

NOTE:

1. EXACT LOCATION AND POSITION OF CONSTRUCTION AREA SIGNS TO BE DETERMINED BY THE ENGINEER.

LEGEND:

No. — CONSTRUCTION AREA SIGN NUMBER

⇨ — DIRECTION OF TRAFFIC

Dist	COUNTY	ROUTE	POST MILES TOTAL PROJECT	SHEET No.	TOTAL SHEETS
04	SF	80	5.8/7.8	2	20

Gordon Jeong 10/29/13
REGISTERED CIVIL ENGINEER DATE

10-28-13
PLANS APPROVAL DATE

REGISTERED PROFESSIONAL ENGINEER — Gordon W. Jeong — No. 33151 — Exp. 6-30-16 — CIVIL — STATE OF CALIFORNIA

THE STATE OF CALIFORNIA OR ITS OFFICERS OR AGENTS SHALL NOT BE RESPONSIBLE FOR THE ACCURACY OR COMPLETENESS OF SCANNED COPIES OF THIS PLAN SHEET.

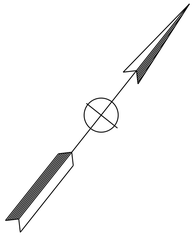

SAN FRANCISCO

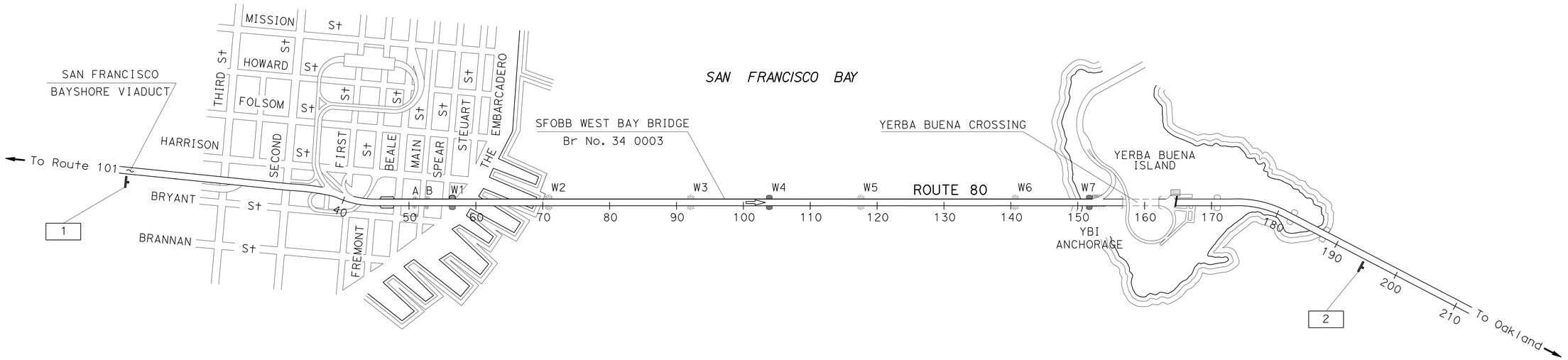

CONSTRUCTION AREA SIGNS

NO SCALE

APPROVED FOR CONSTRUCTION AREA SIGN WORK ONLY

CS-1

CALCULATED-DESIGNED BY			
CHECKED BY	MOHSIN AHMED	MA	10/21/13
	GORDEN JEONG	REVISED BY	DATE REVISED
FUNCTIONAL SUPERVISOR	LAWRENCE A. JONES		
STATE OF CALIFORNIA - DEPARTMENT OF TRANSPORTATION	DESIGN		

Caltrans®

LAST REVISION 10-25-13 — DATE PLOTTED => 13-AUG-2014 — TIME PLOTTED => 14:56

BORDER LAST REVISED 7/2/2010 — USERNAME => s136183 — DGN FILE => 04120000431da001.dgn — RELATIVE BORDER SCALE IS IN INCHES 0 1 2 3 — UNIT 0700 — PROJECT NUMBER & PHASE 04120000431

M

Maint	MAINTENANCE
Max	MAXIMUM
MB	METAL BEAM
MBB	METAL BEAM BARRIER
MBGR	METAL BEAM GUARD RAILING
Med	MEDIAN
MGS	MIDWEST GUARDRAIL SYSTEM
MH	MANHOLE
Min	MINIMUM
Misc	MISCELLANEOUS
Misc I & S	MISCELLANEOUS IRON AND STEEL
Mkr	MARKER
Mod	MODIFIED, MODIFY
Mon	MONUMENT
MP	METAL PLATE
MPGR	METAL PLATE GUARD RAILING
MR	MOVEMENT RATING
MSE	MECHANICALLY STABILIZED EMBANKMENT
Mt	MOUNTAIN, MOUNT
Mtl	MATERIAL
MVP	MAINTENANCE VEHICLE PULLOUT

N

N	NORTH
NB	NORTHBOUND
No.	NUMBER (MUST HAVE PERIOD)
Nos.	NUMBERS (MUST HAVE PERIOD)
NPS	NOMINAL PIPE SIZE
NS	NEAR SIDE
NSP	NEW STANDARD PLAN
NTS	NOT TO SCALE

O

Oblr	OBLITERATE
OC	OVERCROSSING
OD	OUTSIDE DIAMETER
OF	OUTSIDE FACE
OG	ORIGINAL GROUND
OGAC	OPEN GRADED ASPHALT CONCRETE
OGFC	OPEN GRADED FRICTION COURSE
OH	OVERHEAD
OHWM	ORDINARY HIGH WATER MARK
O-O	OUT TO OUT
Opp	OPPOSITE
OSD	OVERSIDE DRAIN

P

P	PAGE
PAP	PERFORATED ALUMINUM PIPE
PB	PULL BOX
PC	POINT OF CURVATURE, PRECAST
PCC	POINT OF COMPOUND CURVE, PORTLAND CEMENT CONCRETE
PCMS	PORTABLE CHANGEABLE MESSAGE SIGN
PCP	PERFORATED CONCRETE PIPE, PRESTRESSED CONCRETE PIPE
PCVC	POINT OF COMPOUND VERTICAL CURVE
PEC	PERMIT TO ENTER AND CONSTRUCT
Ped	PEDESTRIAN
Ped OC	PEDESTRIAN OVERCROSSING
Ped UC	PEDESTRIAN UNDERCROSSING
Perm Mtl	PERMEABLE MATERIAL

P continued

PG	PROFILE GRADE
PI	POINT OF INTERSECTION
PJP	PARTIAL JOINT PENETRATION
Pkwy	PARKWAY
℄,PL	PLATE
P/L	PROPERTY LINE
PM	POST MILE, TIME FROM NOON TO MIDNIGHT
PN	PAVING NOTCH
POC	POINT OF HORIZONTAL CURVE
POT	POINT OF TANGENT
POVC	POINT OF VERTICAL CURVE
PP	PIPE PILE, PLASTIC PIPE, POWER POLE
PPL	PREFORMED PERMEABLE LINER
PPP	PERFORATED PLASTIC PIPE
PRC	POINT OF REVERSE CURVE
PRF	PAVEMENT REINFORCING FABRIC
PRVC	POINT OF REVERSE VERTICAL CURVE
PS&E	PLANS, SPECIFICATIONS AND ESTIMATES
PS, P/S	PRESTRESSED
PSP	PERFORATED STEEL PIPE
PT	POINT OF TANGENCY
PVC	POLYVINYL CHLORIDE
Pvmt	PAVEMENT

Q

Qty	QUANTITY

R

R	RADIUS
R & D	REMOVE AND DISPOSE
R & S	REMOVE AND SALVAGE
R/C	RATE OF CHANGE
RCA	REINFORCED CONCRETE ARCH
RCB	REINFORCED CONCRETE BOX
RCP	REINFORCED CONCRETE PIPE
RCPA	REINFORCED CONCRETE PIPE ARCH
Rd	ROAD
Reinf	REINFORCED, REINFORCEMENT, REINFORCING
Rel	RELOCATE
Repl	REPLACEMENT
Ret	RETAINING
Rev	REVISED, REVISION
Rdwy	ROADWAY
RHMA	RUBBERIZED HOT MIX ASPHALT
Riv	RIVER
RM	ROAD-MIXED
RP	RADIUS POINT, REFERENCE POINT
RR	RAILROAD
RSP	ROCK SLOPE PROTECTION, REVISED STANDARD PLAN
Rt	RIGHT
Rte	ROUTE
RW	REDWOOD, RETAINING WALL
R/W	RIGHT OF WAY
Rwy	RAILWAY

S

S	SOUTH, SUPPLEMENT
SAE	STRUCTURE APPROACH EMBANKMENT
Salv	SALVAGE
SAPP	STRUCTURAL ALUMINUM PLATE PIPE
SB	SOUTHBOUND
SC	SAND CUSHION
SCSP	SLOTTED CORRUGATED STEEL PIPE
SD	STORM DRAIN
Sec	SECOND, SECTION
Sep	SEPARATION
SG	SUBGRADE
Shld	SHOULDER
Sht	SHEET
Sim	SIMILAR
℄	STATION LINE
SM	SELECTED MATERIAL
Spec	SPECIAL, SPECIFICATIONS
SPP	SLOTTED PLASTIC PIPE
SS	SLOPE STAKE
SSBM	STRAP AND SADDLE BRACKET METHOD
SSD	STRUCTURAL SECTION DRAIN
SSPA	STRUCTURAL STEEL PLATE ARCH
SSPP	STRUCTURAL STEEL PLATE PIPE
SSPPA	STRUCTURAL STEEL PLATE PIPE ARCH
SSRP	STEEL SPIRAL RIB PIPE
St	STREET
Sta	STATION
STBB	SINGLE THRIE BEAM BARRIER
Std	STANDARD
Str	STRUCTURE
Surf	SURFACING
SW	SIDEWALK, SOUND WALL
Swr	SEWER
Sym	SYMMETRICAL
S4S	SURFACE 4 SIDES

T

T	SEMI-TANGENT
Tan	TANGENT
TBB	THRIE BEAM BARRIER
Tbr	TIMBER
TC	TOP OF CURB
TCB	TRAFFIC CONTROL BOX
TCE	TEMPORARY CONSTRUCTION EASEMENT
Tel	TELEPHONE
Temp	TEMPORARY
TG	TOP OF GRADE
Tot	TOTAL
TP	TELEPHONE POLE
TPB	TREATED PERMEABLE BASE
TPM	TREATED PERMEABLE MATERIAL
Trans	TRANSITION

T continued

TS	TRANSVERSE, TRAFFIC SIGNAL, TUBULAR STEEL
Typ	TYPICAL

U

UC	UNDERCROSSING
UD	UNDERDRAIN
UG	UNDERGROUND
UON	UNLESS OTHERWISE NOTED
UP	UNDERPASS

V

V	VALVE, DESIGN SPEED
Var	VARIABLE, VARIES
VC	VERTICAL CURVE
VCP	VITRIFIED CLAY PIPE
Vert	VERTICAL
Via	VIADUCT
Vol	VOLUME

W

W	WEST, WIDTH
WB	WESTBOUND
WH	WEEP HOLE
WM	WIRE MESH
WS	WATER SURFACE
WSP	WELDED STEEL PIPE
Wt	WEIGHT
WV	WATER VALVE
WW	WINGWALL
WWLOL	WINGWALL LAYOUT LINE

X

X Sec	CROSS SECTION
Xing	CROSSING

Y

Yr	YEAR
Yrs	YEARS

Dist	COUNTY	ROUTE	POST MILES TOTAL PROJECT	SHEET No.	TOTAL SHEETS
04	SF	80	5.8/7.8	3	20

Grace M. Tsushima
REGISTERED CIVIL ENGINEER

July 19, 2013
PLANS APPROVAL DATE

REGISTERED PROFESSIONAL ENGINEER — Grace M. Tsushima — No. C49814 — Exp. 9-30-14 — CIVIL — STATE OF CALIFORNIA

THE STATE OF CALIFORNIA OR ITS OFFICERS OR AGENTS SHALL NOT BE RESPONSIBLE FOR THE ACCURACY OR COMPLETENESS OF SCANNED COPIES OF THIS PLAN SHEET.

TO ACCOMPANY PLANS DATED 10-28-13

UNIT OF MEASUREMENT SYMBOLS:

Some of the symbols used in the project plan quantity tables and in the Bid Item List are:

TABLE A

SYMBOL USED	DEFINITIONS
ACRE	ACRE
CF	CUBIC FOOT
CY	CUBIC YARD
EA	EACH
GAL	GALLON
LB	POUND
LF	LINEAR FOOT
SQFT	SQUARE FOOT
SQYD	SQUARE YARD
STA	100 FEET
TAB	TABLET
TON	2,000 POUNDS

Some of the symbols used in the plans other than in the project plan quantity tables are:

TABLE B

SYMBOL USED	DEFINITIONS
ksi	KIPS PER SQUARE INCH
ksf	KIPS PER SQUARE FOOT
psi	POUNDS PER SQUARE INCH
psf	POUNDS PER SQUARE FOOT
lb/ft^3, pcf	POUNDS PER CUBIC FOOT
tsf	TONS PER SQUARE FOOT
mph, MPH *	MILES PER HOUR
ø	NOMINAL DIAMETER
oz	OUNCE
lb	POUND
kip	1,000 POUNDS
cal	CALORIE
ft	FOOT OR FEET
gal	GALLON

* For use on a sign panel only

STATE OF CALIFORNIA
DEPARTMENT OF TRANSPORTATION

ABBREVIATIONS (SHEET 2 OF 2)

NO SCALE

RSP A10B DATED JULY 19, 2013 SUPERSEDES STANDARD PLAN A10B DATED MAY 20, 2011 - PAGE 2 OF THE STANDARD PLANS BOOK DATED 2010.

REVISED STANDARD PLAN RSP A10B

2010 REVISED STANDARD PLAN RSP A10B

6-7-13

Dist	COUNTY	ROUTE	POST MILES TOTAL PROJECT	SHEET No.	TOTAL SHEETS
04	SF	80	5.8/7.8	4	20

REGISTERED CIVIL ENGINEER

July 19, 2013
PLANS APPROVAL DATE

Gurinderpal Bhullar
No. C48815
Exp. 9-30-14
CIVIL
REGISTERED PROFESSIONAL ENGINEER
STATE OF CALIFORNIA

THE STATE OF CALIFORNIA OR ITS OFFICERS OR AGENTS SHALL NOT BE RESPONSIBLE FOR THE ACCURACY OR COMPLETENESS OF SCANNED COPIES OF THIS PLAN SHEET.

TO ACCOMPANY PLANS DATED 10-28-13

TABLE 1

TAPER LENGTH CRITERIA AND CHANNELIZING DEVICE SPACING

SPEED (S)	MINIMUM TAPER LENGTH * FOR WIDTH OF OFFSET 12 FEET (W)				MAXIMUM CHANNELIZING DEVICE SPACING		
					X	Y	Z **
	TANGENT 2L	MERGING L	SHIFTING L/2	SHOULDER L/3	TAPER	TANGENT	CONFLICT
mph	ft	ft	ft	ft	ft	ft	ft
20	160	80	40	27	20	40	10
25	250	125	63	42	25	50	12
30	360	180	90	60	30	60	15
35	490	245	123	82	35	70	17
40	640	320	160	107	40	80	20
45	1080	540	270	180	45	90	22
50	1200	600	300	200	50	100	25
55	1320	660	330	220	55	110	27
60	1440	720	360	240	60	120	30
65	1560	780	390	260	65	130	32
70	1680	840	420	280	70	140	35

* - For other offsets, use the following merging taper length formula for L:
For speed of 40 mph or less, $L = WS^2/60$
For speed of 45 mph or more, $L = WS$

Where: L = Taper length in feet
W = Width of offset in feet
S = Posted speed limit, off-peak 85th-percentile speed prior to work starting, or the anticipated operating speed in mph

** - Use for taper and tangent sections where there are no pavement markings or where there is a conflict between existing pavement markings and channelizers (CA).

TABLE 2

LONGITUDINAL BUFFER SPACE AND FLAGGER STATION SPACING

SPEED *	Min D **	DOWNGRADE Min D ***		
		-3%	-6%	-9%
mph	ft	ft	ft	ft
20	115	116	120	126
25	155	158	165	173
30	200	205	215	227
35	250	257	271	287
40	305	315	333	354
45	360	378	400	427
50	425	446	474	507
55	495	520	553	593
60	570	598	638	686
65	645	682	728	785
70	730	771	825	891

* - Speed is posted speed limit, off-peak 85th-percentile speed prior to work starting, or the anticipated operating speed in mph

** - Longitudinal buffer space or flagger station spacing

*** - Use on sustained downgrade steeper than -3 percent and longer than 1 mile.

TABLE 3

ADVANCE WARNING SIGN SPACING

ROAD TYPE	DISTANCE BETWEEN SIGNS *		
	A	B	C
	ft	ft	ft
URBAN - 25 mph OR LESS	100	100	100
URBAN - MORE THAN 25 mph TO 40 mph	250	250	250
URBAN - MORE THAN 40 mph	350	350	350
RURAL	500	500	500
EXPRESSWAY / FREEWAY	1000	1500	2640

* - The distances are approximate, are intended for guidance purposes only, and should be applied with engineering judgment. These distances should be adjusted by the Engineer for field conditions, if necessary, by increasing or decreasing the recommmended distances.

2010 REVISED STANDARD PLAN RSP T9

STATE OF CALIFORNIA
DEPARTMENT OF TRANSPORTATION

TRAFFIC CONTROL SYSTEM TABLES FOR LANE AND RAMP CLOSURES

NO SCALE

RSP T9 DATED JULY 19, 2013 SUPERSEDES RSP T9 DATED APRIL 19, 2013 THAT SUPPLEMENTS THE STANDARD PLANS BOOK DATED 2010.

REVISED STANDARD PLAN RSP T9

4-30-13

Dist	COUNTY	ROUTE	POST MILES TOTAL PROJECT	SHEET No.	TOTAL SHEETS
04	SF	80	5.8/7.8	5	20

REGISTERED CIVIL ENGINEER

April 19, 2013
PLANS APPROVAL DATE

REGISTERED PROFESSIONAL ENGINEER
Gurinderpal Bhullar
No. C48815
Exp. 9-30-14
CIVIL
STATE OF CALIFORNIA

THE STATE OF CALIFORNIA OR ITS OFFICERS OR AGENTS SHALL NOT BE RESPONSIBLE FOR THE ACCURACY OR COMPLETENESS OF SCANNED COPIES OF THIS PLAN SHEET.

TO ACCOMPANY PLANS DATED 10-28-13

NOTES:

See Revised Standard Plan RSP T9 for tables.

Use cone spacing X for taper segment, Y for tangent segment or Z for conflict situations, as approriate, per Table 1, unless X, Y, or Z cone spacing is shown on this sheet.

Unless otherwise specified in the special provisions, all temporary warning signs shall have black legend on fluorescent orange background.

California codes are designated by (CA). Otherwise, Federal (MUTCD) codes are shown.

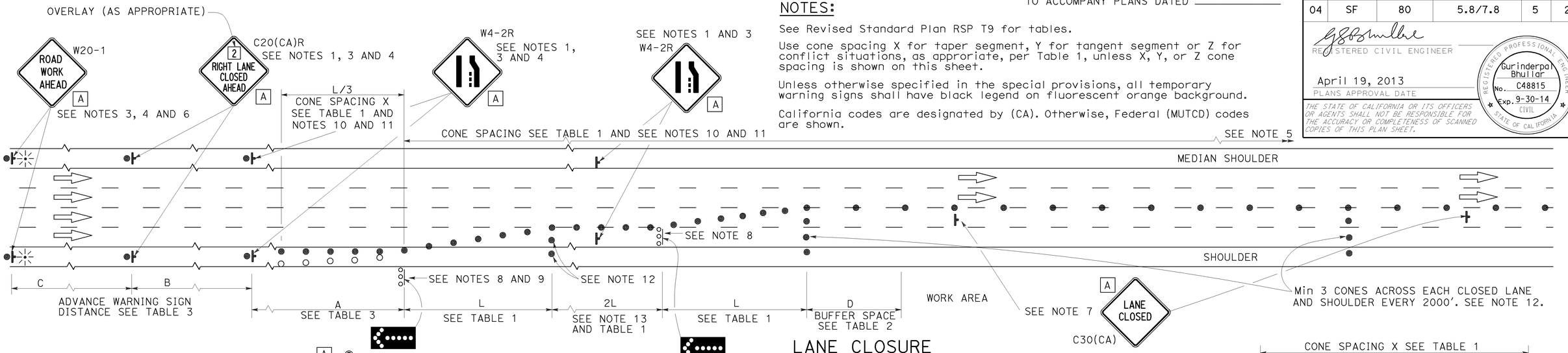

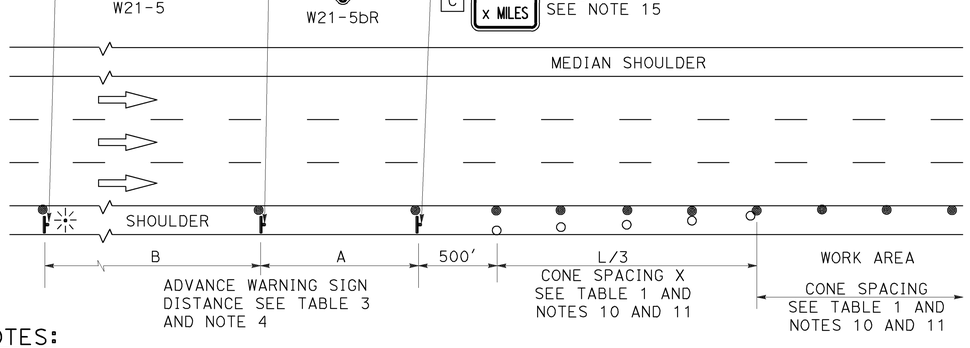

LANE CLOSURE

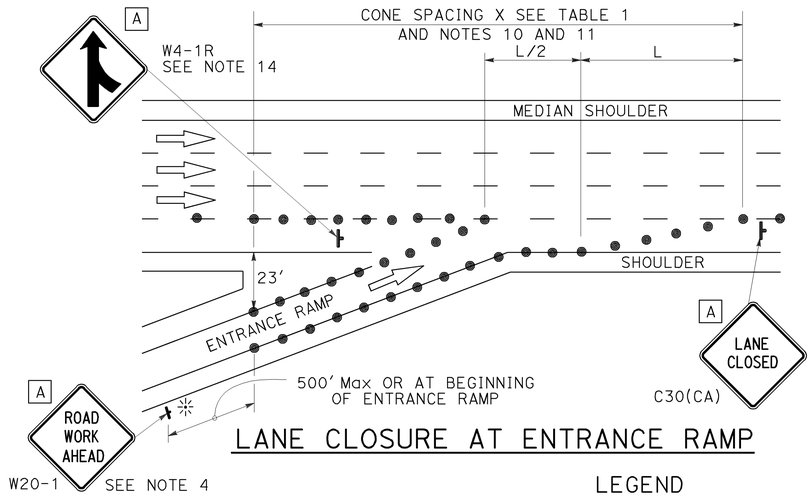

LANE CLOSURE AT ENTRANCE RAMP

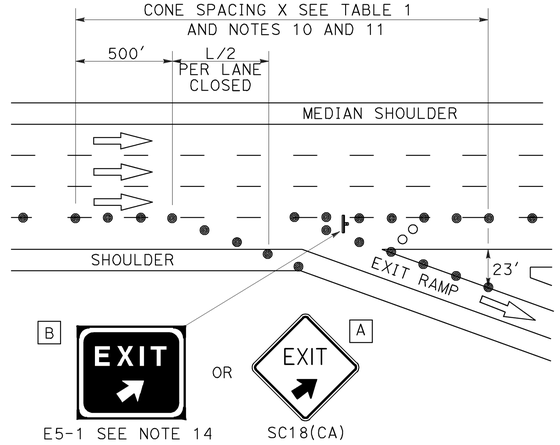

LANE CLOSURE AT EXIT RAMP

NOTES:

1. Median lane closures shall conform to the details as shown except that C20(CA)L and W4-2L signs shall be used.
2. At least one person shall be assigned to provide full time maintenance of traffic control devices for lane closures.
3. Duplicate sign installations are not required:
   a) On opposite shoulder if at least one-half of the available lanes remain open to traffic.
   b) In the median if the width of the median shoulder is less than 8' and the outside lanes are to be closed.
4. Each advance warning sign on each side of the roadway shall be equipped with at least two flags for daytime closure. Each flag shall be at least 16" x 16" in size and shall be orange or fluorescent red-orange in color. Flashing beacons shall be placed at the locations indicated for lane closure during hours of darkness.
5. A G20-2 "END ROAD WORK" sign, with minimum size of 48" x 24" as appropriate, shall be placed at the end of the lane closure unless the end of work area is obvious or ends within a larger project's limits.

SHOULDER CLOSURE

6. If the W20-1 sign would follow within 2000' of a stationary W20-1 or G20-1 "ROAD WORK NEXT _____ MILES", use a C20(CA) sign for the first advance warning sign.
7. Place a C30(CA) sign every 2000' throughout length of lane closure.
8. One flashing arrow sign for each lane closed. The flashing arrow signs shall be Type I.
9. A minimum 1500' of sight distance shall be provided where possible for vehicles approaching the first flashing arrow sign. Lane closures shall not begin at top of crest vertical curve or on a horizontal curve.
10. All cones used for lane closures during the hours of darkness shall be fitted with retroreflective bands (or sleeves) as specified in the specifications.
11. Portable delineators, placed at one-half the spacing indicated for traffic cones may be used instead of cones for daytime closures only.
12. Unless otherwise specified in the special provisions, a minimum of 3 cones shall be placed transversely across each closed lane and shoulder at each location where a taper across a traffic lane ends and every 2000' as shown on the "Lane Closure" detail. Two Type II barricades may be used instead of the 3 cones. The transverse alignment of the cones or barricades on the closed shoulder may be shifted from the transverse alignment to provide access to the work.
13. Unless otherwise specified in the special provisions, the 2L tangent shown along lane lines shall be used between the L tapers required for each closed traffic lane.
14. Unless otherwise specified in the special provisions, the E5-1 or SC18(CA) and W4-1 signs shall be used as shown.
15. A W7-3aP "NEXT___MILES" plaque must be used if theshoulder closure extends beyond the distance that can be perceived by road users.

LEGEND

- TRAFFIC CONE
- TRAFFIC CONE (OPTIONAL TAPER)
- TEMPORARY TRAFFIC CONTROL SIGN
- FLASHING ARROW SIGN (FAS)
- FAS SUPPORT OR TRAILER
- PORTABLE FLASHING BEACON

SIGN PANEL SIZE (Min)

A	48" x 48"
B	72" x 60"
C	36" x 30"

STATE OF CALIFORNIA
DEPARTMENT OF TRANSPORTATION

TRAFFIC CONTROL SYSTEM FOR LANE CLOSURE ON FREEWAYS AND EXPRESSWAYS

NO SCALE

RSP T10 DATED APRIL 19, 2013 SUPERSEDES STANDARD PLAN T10 DATED MAY 20, 2011 - PAGE 237 OF THE STANDARD PLANS BOOK DATED 2010.

REVISED STANDARD PLAN RSP T10

2010 REVISED STANDARD PLAN RSP T10

12-18-13

TYPICAL RAMP CLOSURES

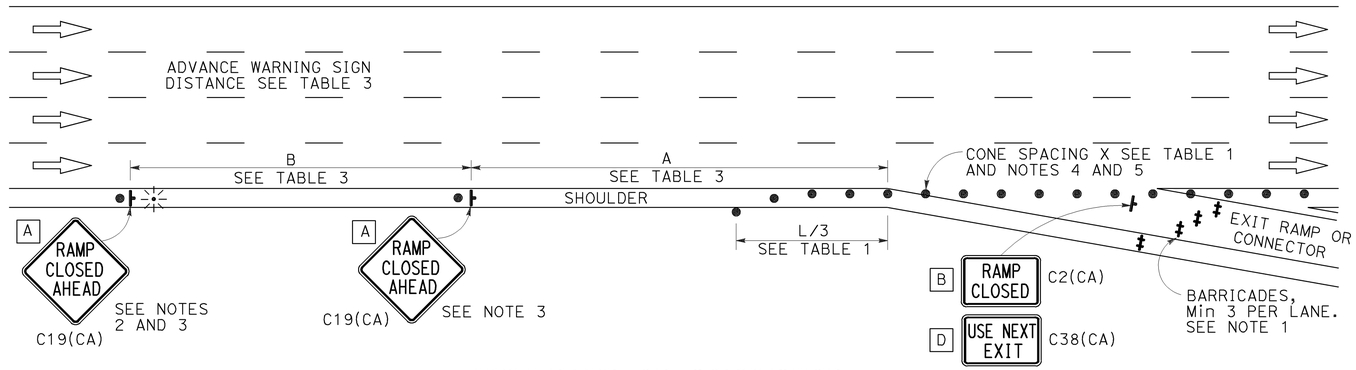

EXIT RAMP OR CONNECTOR

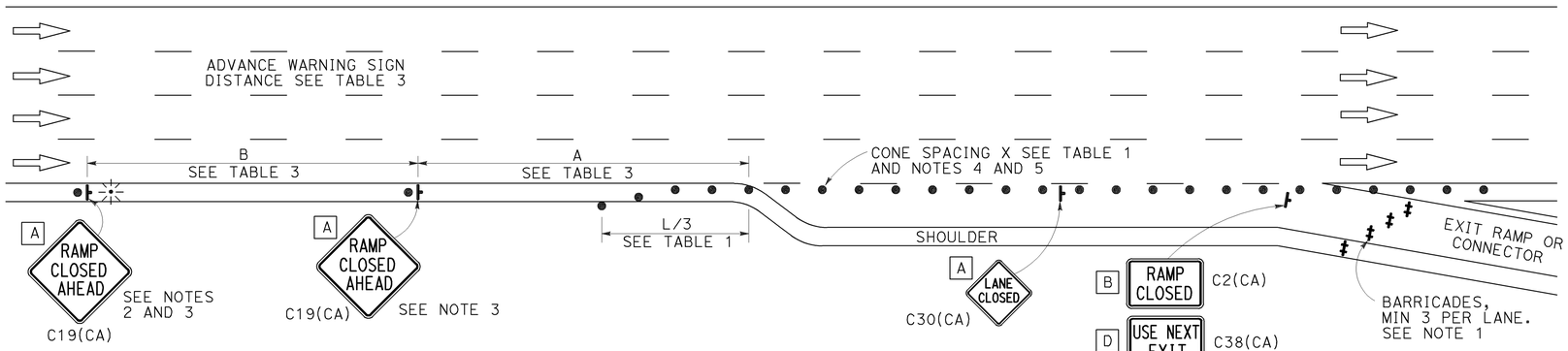

EXIT RAMP OR CONNECTOR WITH ADDITIONAL LANE

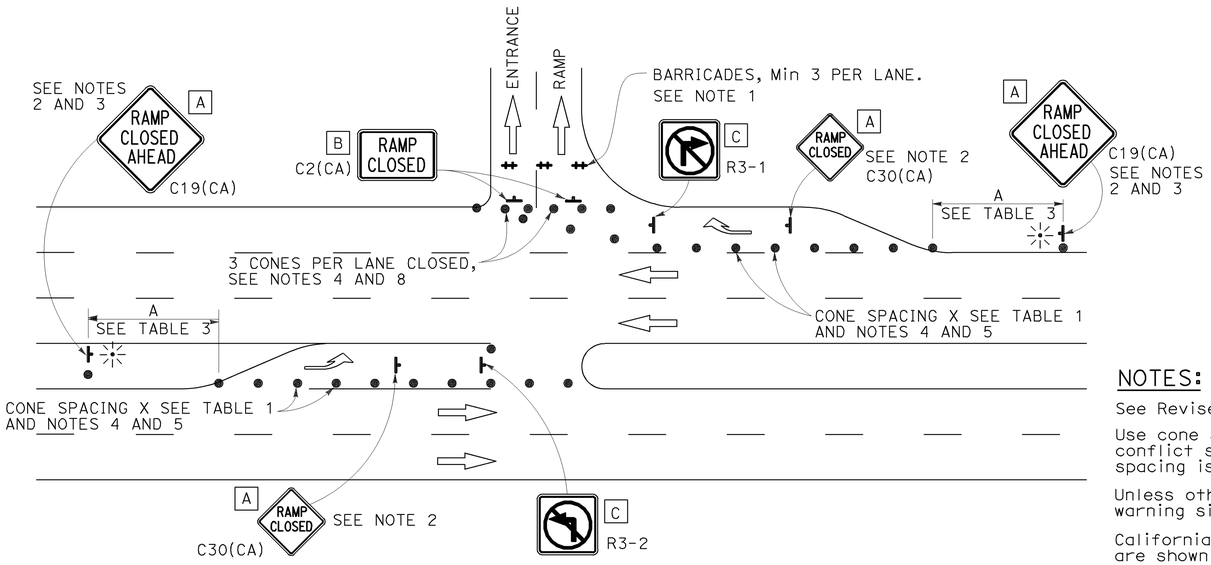

ENTRANCE RAMP WITH TURNING POCKETS

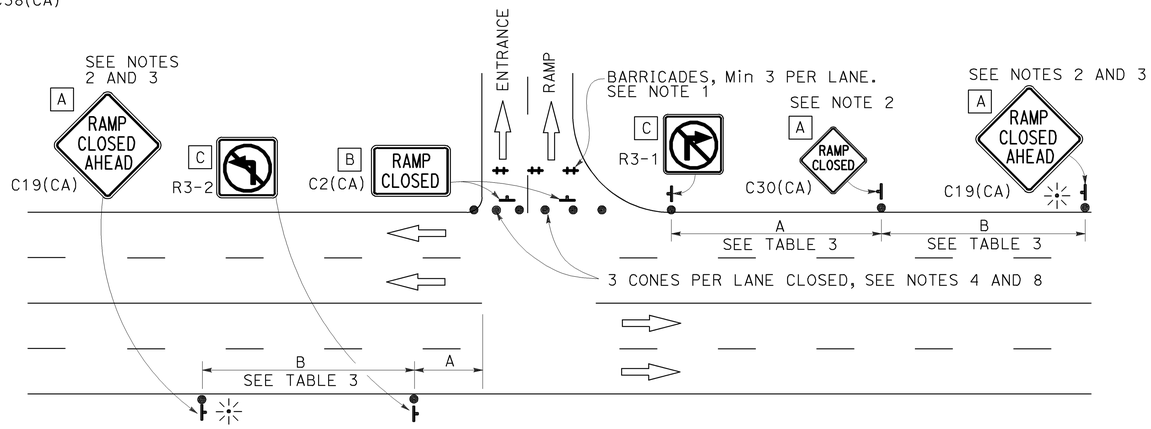

ENTRANCE RAMP WITHOUT TURNING POCKETS

SIGN PANEL SIZE (Min)

- A 48" × 48"
- B 48" × 30"
- C 36" × 36"
- D 48" × 36"

LEGEND

- ● TRAFFIC CONE
- ⊢ TEMPORARY TRAFFIC CONTROL SIGN
- ‡ BARRICADES
- ⁘ PORTABLE FLASHING BEACON

Dist	COUNTY	ROUTE	POST MILES TOTAL PROJECT	SHEET No.	TOTAL SHEETS
04	SF	80	5.8/7.8	6	20

REGISTERED CIVIL ENGINEER

April 19, 2013
PLANS APPROVAL DATE

REGISTERED PROFESSIONAL ENGINEER
Gurinderpal Bhullar
No. C48815
Exp. 9-30-14
CIVIL
STATE OF CALIFORNIA

THE STATE OF CALIFORNIA OR ITS OFFICERS OR AGENTS SHALL NOT BE RESPONSIBLE FOR THE ACCURACY OR COMPLETENESS OF SCANNED COPIES OF THIS PLAN SHEET.

TO ACCOMPANY PLANS DATED 10-28-13

NOTES:

1. Barricades shall be Type I, II, or III for closures lasting one week or less and Type III for closures lasting longer than one week.
2. In addition to placing the C19(CA) "RAMP CLOSED AHEAD" and C30(CA) "RAMP CLOSED" signs, black on orange overlay plates with the word "CLOSED" may be mounted, as directed by the Engineer, on all guide signs that refer to the closed ramp. The letter size on the overlay shall be the same as the guide sign.
3. Each advance C19(CA) "RAMP CLOSED AHEAD" sign shall be equipped with at least two flags for daytime closure. Each flag shall be at least 16" × 16" in size and shall be orange or fluorescent red-orange in color. A flashing beacon shall be placed on top of the first C19(CA) sign during hours of darkness.
4. All cones used for ramp closures during the hours of darkness shall be fitted with retroreflective bands (or sleeves) as specified in the specifications.
5. Portable delineators, placed at one-half the spacing indicated for traffic cones, may be used instead of cones for daytime ramp closures only.
6. At least one person shall be assigned to provide full time maintenance of traffic control devices, unless otherwise directed by the Engineer.
7. The existing "EXIT" signs shall be covered during ramp closures.
8. A minimum of 3 cones shall be placed transversely across each closed lane and shoulder.

NOTES:

See Revised Standard Plan RSP T9 for tables.

Use cone spacing X for taper segment, Y for tangent segment or Z for conflict situations, as approriate, per Table 1, unless X, Y, or Z cone spacing is shown on this sheet.

Unless otherwise specified in the special provisions, all temporary warning signs shall have black legend on fluorescent orange background.

California codes are designated by (CA). Otherwise, Federal (MUTCD) codes are shown.

STATE OF CALIFORNIA
DEPARTMENT OF TRANSPORTATION

TRAFFIC CONTROL SYSTEM FOR RAMP CLOSURE

NO SCALE

RSP T14 DATED APRIL 19, 2013 SUPERSEDES STANDARD PLAN T14
DATED MAY 20, 2011 - PAGE 242 OF THE STANDARD PLANS BOOK DATED 2010.

REVISED STANDARD PLAN RSP T14

2010 REVISED STANDARD PLAN RSP T14

12-18-12

DIST.	COUNTY	ROUTE	POST MILES TOTAL PROJECT	SHEET NO.	TOTAL SHEETS
04	SF	80	5.8/7.8	7	20

Hongyuan Su 07-25-14
REGISTERED CIVIL ENGINEER DATE

REGISTERED PROFESSIONAL ENGINEER
HONGYUAN SU
No. C58260
Exp. 6-30-16
CIVIL
STATE OF CALIFORNIA

PLANS APPROVAL DATE

The State of California or its officers or agents shall not be responsible for the accuracy or completeness of electronic copies of this plan sheet.

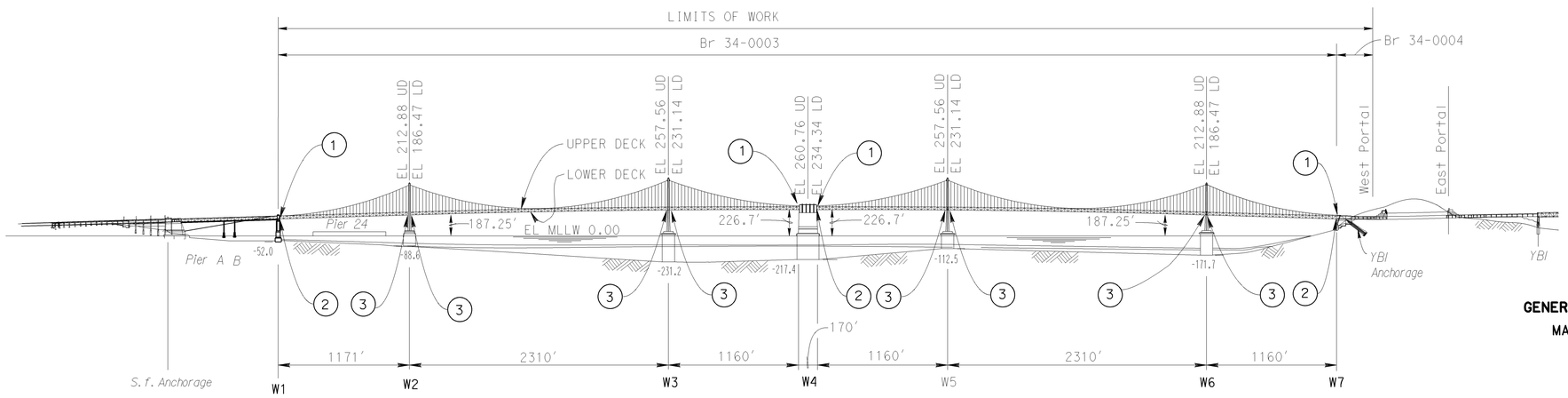

ELEVATION
1" = 600'

SAN FRANCISCO

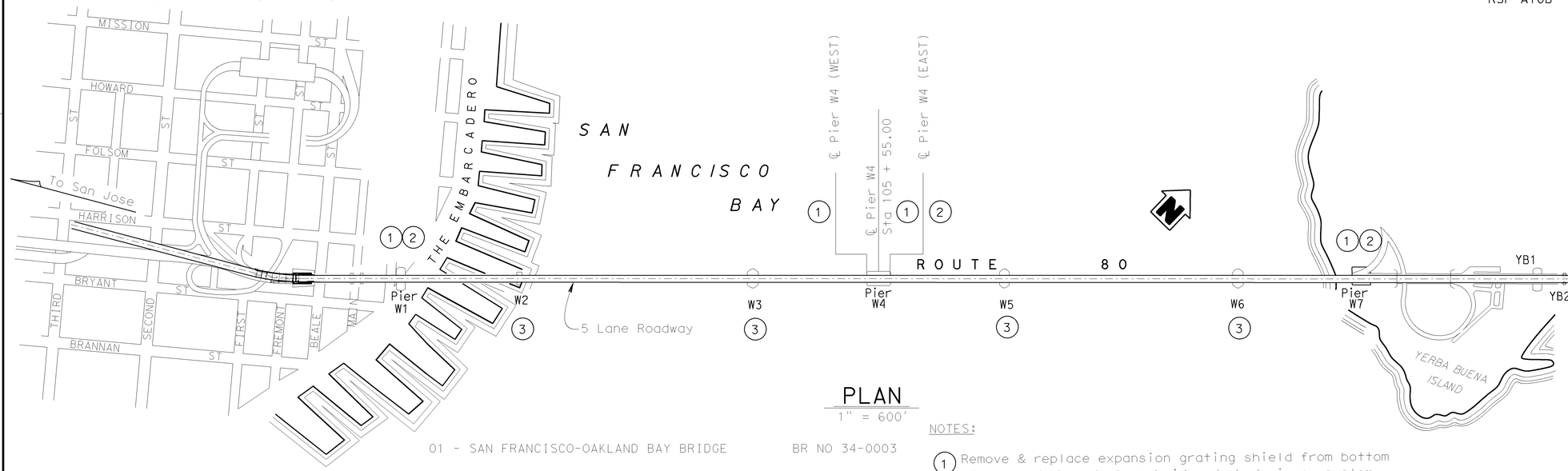

PLAN
1" = 600'

01 - SAN FRANCISCO-OAKLAND BAY BRIDGE BR NO 34-0003

QUANTITIES

LEAD COMPLIANCE PLAN	LUMP SUM
CLEAN BRIDGE DECK DRAINAGE SYSTEM	50 LF
BRIDGE REMOVAL (PORTION)	LUMP SUM
RECONSTRUCT HANDRAILING	6 LF
MISCELLANEOUS METAL (BRIDGE)	51,650 LB
MISCELLANEOUS METAL (LADDER SAFETY SYSTEM)	16 EA
ROCKER BEARING GREASE LINES	LUMP SUM

NOTE:
THE CONTRACTOR SHALL VERIFY ALL CONTROLLING FIELD DIMENSIONS BEFORE ORDERING OR FABRICATING ANY MATERIAL.

NOTES:

(1) Remove & replace expansion grating shield from bottom of upper deck and clean bridge deck drainage system, See "EXISTING EXPANSION GRATING SHIELDS", "NEW EXPANSION GRATING SHIELDS" and "SECTIONS & DETAILS" sheets.

(2) Install steel access ladder and platform from lower deck, See "SUMMARY AND LOCATION KEY PLAN" sheet.

(3) Remove & replace access ladder, install work platform and grease lines from lower deck, See "SUMMARY AND LOCATION KEY PLAN" sheet.

GENERAL NOTES

MATERIALS:

STEEL PLATES, BARS AND SHAPES:
ASTM A36 36M
HS BOLT:
ASTM 449, TYPE 1

ALL STEEL MEMBERS AND FASTENERS HOT-DIP GALVANIZED

STANDARD PLANS DATED MAY 2010

SHEET No.	TITLE
A10A	ACRONYMS AND ABBREVIATIONS (SHEET 1 OF 2)
RSP-A10B	ACRONYMS AND ABBREVIATIONS (SHEET 2 OF 2)

INDEX TO PLANS

SHEET NO.	TITLE
1	GENERAL PLAN
2	SUMMARY AND LOCATION KEY PLAN
3	EXSTING EXPANSION GRATING SHIELD
4	NEW EXPANSION GRATING SHIELD
5	SECTIONS & DETAILS
6	LADDER DETAILS NO. 1
7	LADDER DETAILS NO. 2
8	LADDER DETAILS NO. 3
9	LADDER DETAILS NO. 4
10	LADDER DETAILS NO. 5
11	LADDER DETAILS NO. 6
12	GENERAL VIEW AND LINE LAYOUT
13	GREASE LINE DETAILS NO. 1
14	GREASE LINE DETAILS NO. 2

EXPANSION GRATING SHIELD, ACCESS LADDER AND GREASE LINE AT WEST SPAN PIERS
SAN FRANCISCO-OAKLAND BAY BRIDGE
GENERAL PLAN

Kenneth R Brown 7-25-14
DESIGN ENGINEER

DESIGN	BY H.Su	CHECKED L. Ellis	LOAD FACTOR DESIGN	LIVE LOADING: HS20-44 AND ALTERNATIVE AND PERMIT DESIGN LOAD	
DETAILS	BY M.Yu	CHECKED L. Ellis	LAYOUT	BY	CHECKED
QUANTITIES	BY H.Su	CHECKED L. Ellis	SPECIFICATIONS	BY	PLANS AND SPECS COMPARED

STATE OF CALIFORNIA
DEPARTMENT OF TRANSPORTATION

DIVISION OF MAINTENANCE
STRUCTURE MAINTENANCE AND INVESTIGATIONS

UNIT: 04609
PROJECT NUMBER & PHASE: 0412000043

BRIDGE NO. 34-0003
POST MILE 5.8/7.719

CONTRACT NO.: 04-3G4431

DISREGARD PRINTS BEARING EARLIER REVISION DATES

REVISION DATES				SHEET	OF
7-25-14		1-3-18	7-14-18	1	14

DS OSD 2138 (CADD 4/89)

ORIGINAL SCALE IN INCHES FOR REDUCED PLANS 0 1 2 3

FILE =>01-04-sfobb-ladder-gp.dgn

DIST	COUNTY	ROUTE	POST MILES TOTAL PROJECT	SHEET No	TOTAL SHEETS
04	SF	80	5.8/7.8	8	20

Hongyuan Su 07-25-14
REGISTERED CIVIL ENGINEER DATE

PLANS APPROVAL DATE

REGISTERED PROFESSIONAL ENGINEER
HONGYUAN SU
No. C58260
Exp. 6-30-16
CIVIL
STATE OF CALIFORNIA

The State of California or its officers or agents shall not be responsible for the accuracy or completeness of electronic copies of this plan sheet.

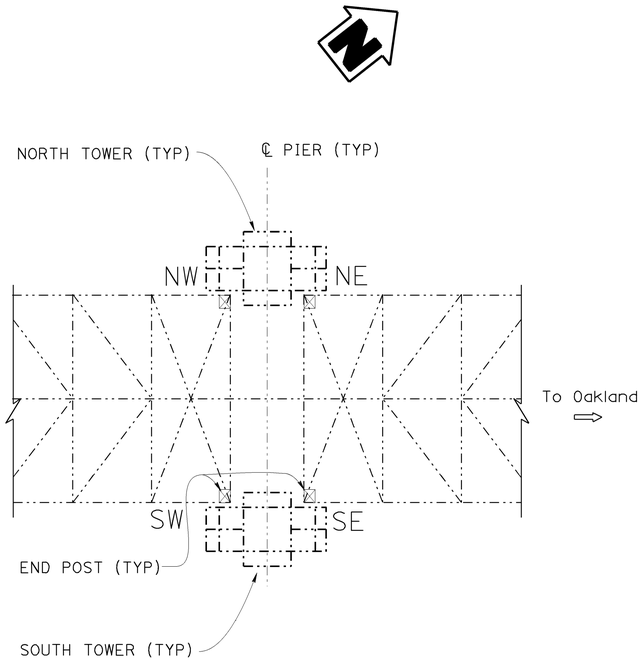

LOCATION KEY PLAN (LOWER DECK)

Ladder & Maintenance Platform Summary

Location		Upper Ladder (access from lower deck)					Lower Ladder (access from upper ladder)			Platform		Note
Pier No.	Sub-Location	No Cage (ea)	Caged (ea)	Ladder Safety System (ea)	Safety anchor /sign (ea/ea)	Remove Existing (ft/type)	Caged (ea)	Ladder Safety System (ea)	Safety anchor/ grab bar /sign (ea/ea/ea)	New (ea)	Remove Existing (ea)	
W1	NE		1							1		See LADDER DETAILS No. 5
	SE		1							1		See LADDER DETAILS No. 5
W2	SW	1		1	1/1	20/A*	1	1	1/0/1	1	2	See LADDER DETAILS No. 1 ~ 4
	NE	1		1	1/1	20/A*		1	1/2/1	1	2	See LADDER DETAILS No. 1 ~ 4
W3	SW	1		1	1/1	20/A*	1	1	1/0/1	1	2	See LADDER DETAILS No. 1 ~ 4
	NE	1		1	1/1	20/A*		1	1/2/1	1	2	See LADDER DETAILS No. 1 ~ 4
W4	NE		1			15/S**				2	1***	See LADDER DETAILS No. 5
	SE		1			15/S**				2	1***	See LADDER DETAILS No. 5
W5	SE	1		1	1/1	10/ S**	1	1	1/0/1	1	2	See LADDER DETAILS No. 1 ~ 4
	NW	1		1	1/1	10/ S**	Extend Existing	1	1/0/1	1	2	See LADDER DETAILS No. 1 ~ 4
W6	SE	1		1	1/1	10/ S**	1	1	1/0/1	1	2	See LADDER DETAILS No. 1 ~ 4
	NW	1		1	1/1	10/ S**		1	1/2/1	1	2	See LADDER DETAILS No. 1 ~ 4
W7	SW		1			10/ S**				1		See LADDER DETAILS No. 5
	NW		1			10/ S**				1		See LADDER DETAILS No. 5

A * Existing temporary aluminum ladder rope-tied to the structure. Un-tie to remove.
S ** Whole or segments of old steel ladder, in various length, bolted or welded to the structure. Un-bolt or cut, if weld connected, to remove.
*** Existing 41"x36" steel raised pattern floor plate. Un-bolt to remove

Grease Line Installation Summary

Pier No.	Locations to Install Grease Lines				Note
	NW	SW	NE	SE	
W2	1	1	1	1	See GENERAL VIEW AND LAYOUT
W3	1	1	1	1	See GENERAL VIEW AND LAYOUT
W5	1	1	1	1	See GENERAL VIEW AND LAYOUT
W6	1	1	1	1	See GENERAL VIEW AND LAYOUT

EXPANSION GRATING SHIELD, ACCESS LADDER AND GREASE LINE AT WEST SPAN PIERS

SAN FRANCISCO-OAKLAND BAY BRIDGE

SUMMARY AND LOCATION KEY PLAN

	BY	CHECKED
DESIGN	H. Su	L. Ellis
DETAILS	M. Yu	H. Su
QUANTITIES	H. Su	L. Ellis

STATE OF CALIFORNIA
DEPARTMENT OF TRANSPORTATION

DIVISION OF MAINTENANCE
STRUCTURE MAINTENANCE AND INVESTIGATIONS

BRIDGE NO. 34-0003
POST MILE 5.8/7.6

STRUCTURES DESIGN DETAIL SHEET (ENGLISH) (REV. 10/25/05)

ORIGINAL SCALE IN INCHES FOR REDUCED PLANS 0 1 2 3

UNIT: 04609
PROJECT NUMBER & PHASE: 0412000043
CONTRACT NO.: 04-3G4431

DISREGARD PRINTS BEARING EARLIER REVISION DATES → 7-3-14 | 7-8-14 | 7-14-14 | 7-21-14

SHEET 2 OF 14

FILE => 02-04-sfobb-ladder-jst.dgn

USERNAME => s114592 DATE PLOTTED => 12-AUG-2014 TIME PLOTTED => 13:06

DIST	COUNTY	ROUTE	POST MILES TOTAL PROJECT	SHEET No	TOTAL SHEETS
04	SF	80	5.8/7.8	9	20

Hongyuan Su 05-17-13
REGISTERED CIVIL ENGINEER DATE

10-28-13
PLANS APPROVAL DATE

REGISTERED PROFESSIONAL ENGINEER
HONGYUAN SU
No. C58260
Exp. 6-30-16
CIVIL
STATE OF CALIFORNIA

The State of California or its officers or agents shall not be responsible for the accuracy or completeness of electronic copies of this plan sheet.

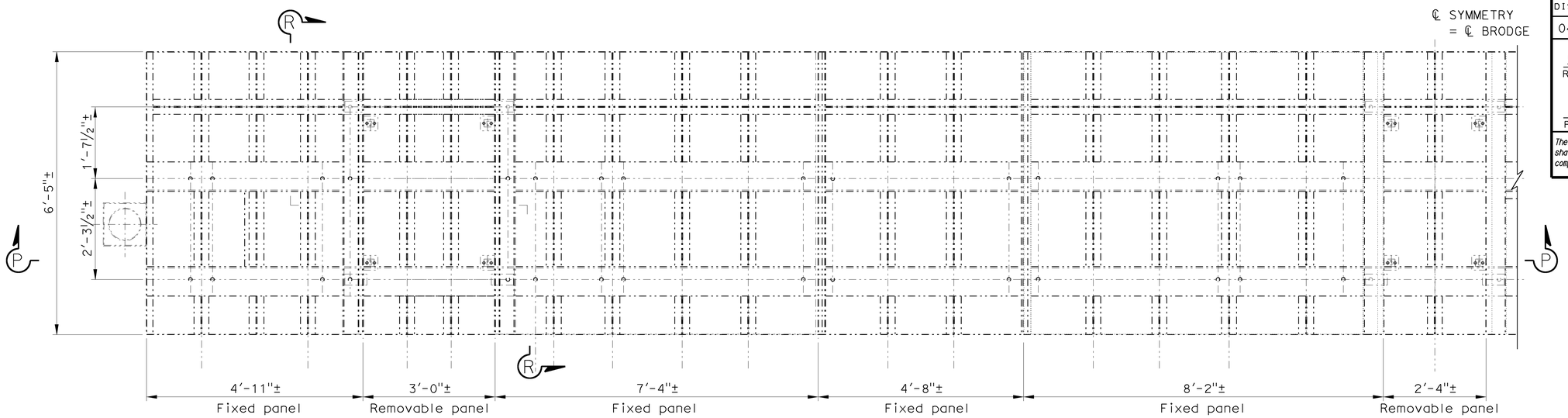

HALF EXPANSION GRATING SHIELDS PLAN @ PIERS W1, W4 WEST, W4 EAST, & W7

SCALE: ¾"=1'-0"

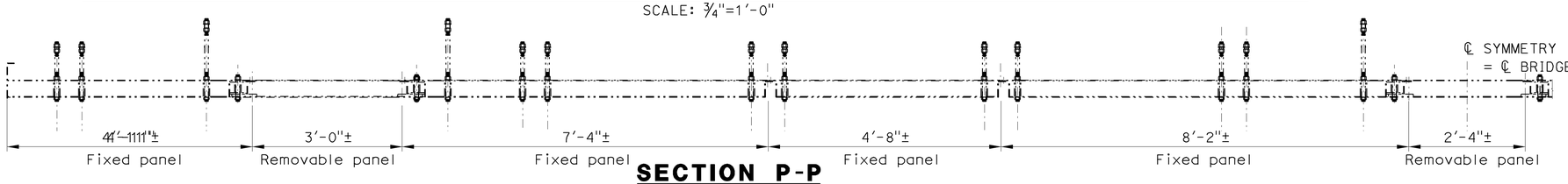

SECTION P-P

SCALE: ¾"=1'-0"

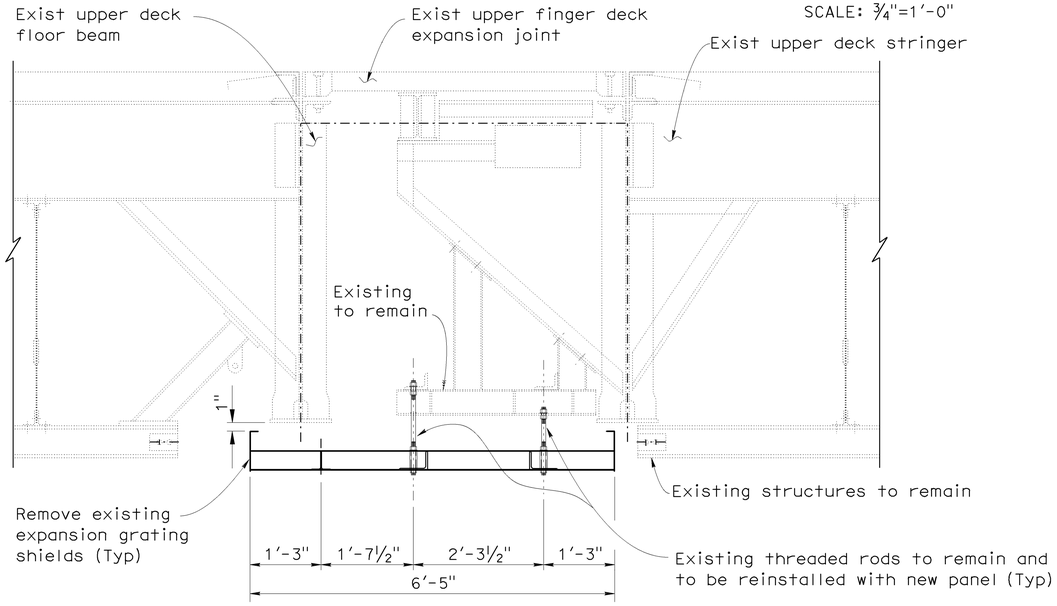

SECTION R-R

SCALE: ¾"=1'-0"

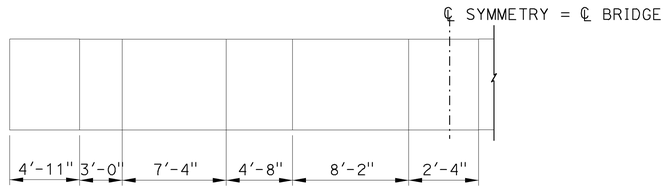

REMOVE W1 & W7

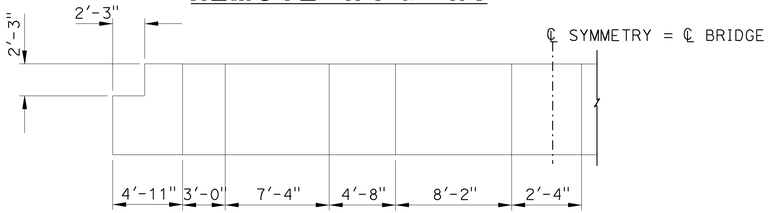

REMOVE WEST & EAST W4

EXPANSION GRATING SHIELD, ACCESS LADDER AND GREASE LINE AT WEST SPAN PIERS

SAN FRANCISCO-OAKLAND BAY BRIDGE

EXISTING EXPANSION GRATNG SHIELDS

	BY	CHECKED
DESIGN	L. Ellis	H. Su
DETAILS	M. Yu	L. Ellis
QUANTITIES	L. Ellis	H. Su

STATE OF CALIFORNIA
DEPARTMENT OF TRANSPORTATION

DIVISION OF MAINTENANCE
STRUCTURE MAINTENANCE AND INVESTIGATIONS

BRIDGE NO. 34-0003
POST MILE 5.8/7.6

STRUCTURES DESIGN DETAIL SHEET (ENGLISH) (REV. 10/25/05)

ORIGINAL SCALE IN INCHES FOR REDUCED PLANS 0 1 2 3

UNIT: 04609
PROJECT NUMBER & PHASE: 0412000043
CONTRACT NO.: 04-3G4431

DISREGARD PRINTS BEARING EARLIER REVISION DATES → 5-14-13 | 5-21-13 | 6-20-13 | 7-21-14

SHEET 3 OF 14

FILE => 03-04-sfobb-west-jst.dgn

USERNAME => s114592 DATE PLOTTED => 12-AUG-2014 TIME PLOTTED => 13:06

DIST	COUNTY	ROUTE	POST MILES TOTAL PROJECT	SHEET No	TOTAL SHEETS
04	SF	80	5.8/7.8	10	20

Hongyuan Su 05-17-13
REGISTERED CIVIL ENGINEER DATE

10-28-13
PLANS APPROVAL DATE

REGISTERED PROFESSIONAL ENGINEER — HONGYUAN SU No. C58260 Exp. 6-30-16 CIVIL — STATE OF CALIFORNIA

The State of California or its officers or agents shall not be responsible for the accuracy or completeness of electronic copies of this plan sheet.

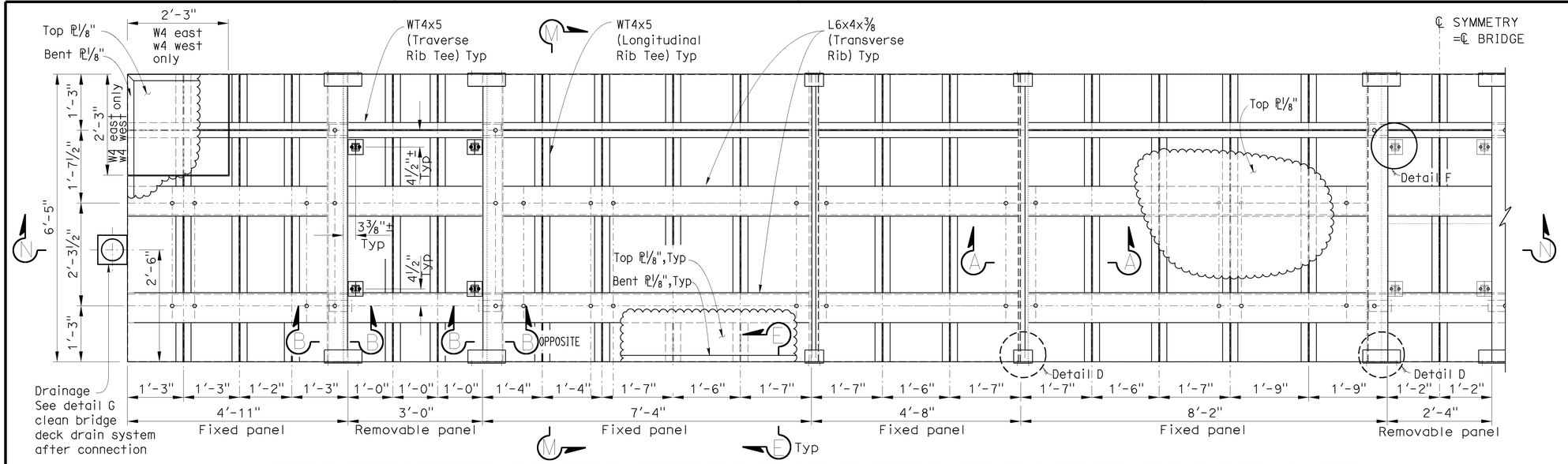

HALF EXPANSION GRATING SHIELDS PLAN @ PIERS W1, W4 EAST, W4 WEST & W7

SCALE: 3/4"=1'-0"

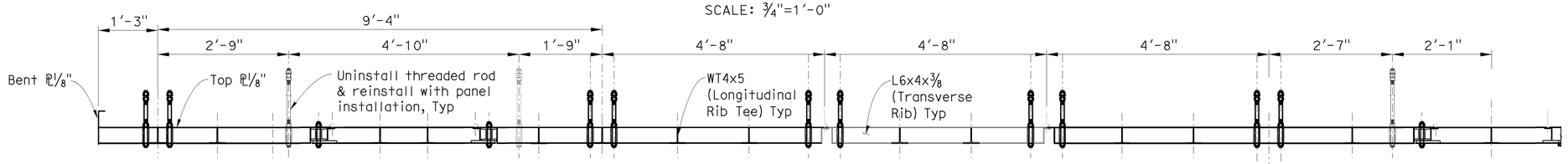

SECTION N-N

SCALE: 3/4"=1'-0"

Note:
Pier W1 and west half of W4 shown
Pier W7 and east half of W4 shown

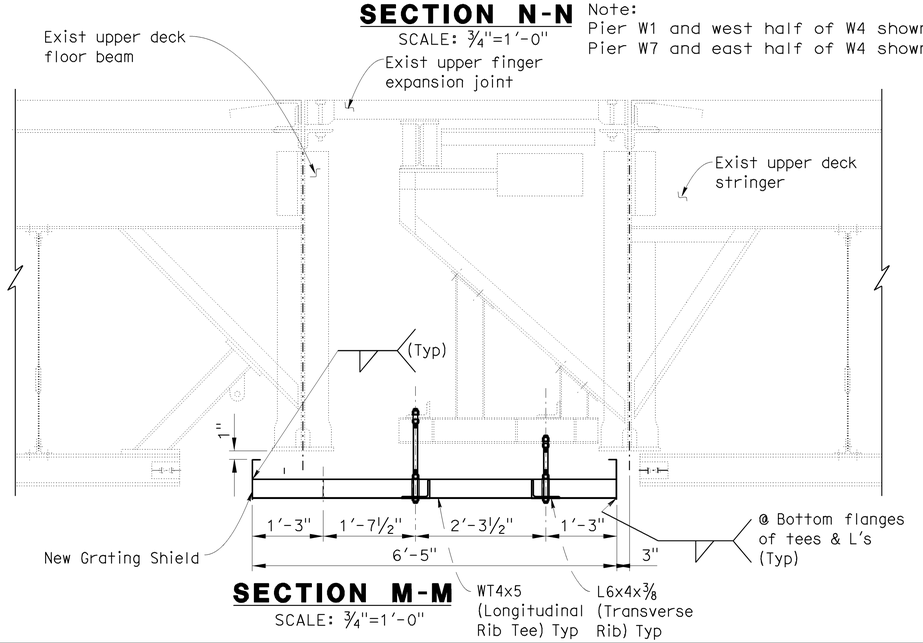

SECTION M-M

SCALE: 3/4"=1'-0"

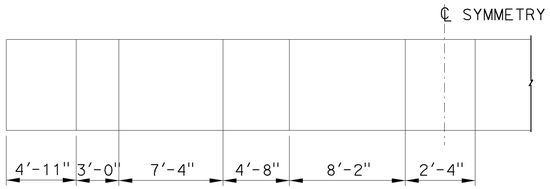

NEW W1 & W7

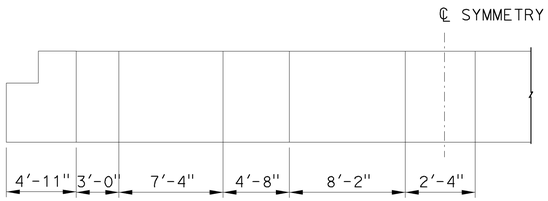

NEW W4 EAST & W4 WEST

NOTE:

For sections and details not shown, see "SECTIONS AND DETAILS " sheet.

EXPANSION GRATING SHIELD, ACCESS LADDER AND GREASE LINE AT WEST SPAN PIERS

SAN FRANCISCO-OAKLAND BAY BRIDGE

NEW EXPANSION GRATING SHIELDS

	BY	CHECKED
DESIGN	L. Ellis	H. Su
DETAILS	M. Yu	L. Ellis
QUANTITIES	L. Ellis	H. Su

STATE OF CALIFORNIA
DEPARTMENT OF TRANSPORTATION

DIVISION OF MAINTENANCE
STRUCTURE MAINTENANCE AND INVESTIGATIONS

BRIDGE NO. 34-0003
POST MILE 5.8/7.6

UNIT: 04609
PROJECT NUMBER & PHASE: 0412000043
CONTRACT NO.: 04-3G4431

DISREGARD PRINTS BEARING EARLIER REVISION DATES →

SHEET 4 OF 14

STRUCTURES DESIGN DETAIL SHEET (ENGLISH) (REV. 10/25/05)

ORIGINAL SCALE IN INCHES FOR REDUCED PLANS 0 1 2 3

FILE => 04-04-sfobb-west-jst.dgn

USERNAME => s11459 2 DATE PLOTTED => 12-AUG-2014 TIME PLOTTED => 13:07

DIST	COUNTY	ROUTE	POST MILES TOTAL PROJECT	SHEET No	TOTAL SHEETS
04	SF	80	5.8/7.8	11	20

Hongyuan Su 05-17-13
REGISTERED CIVIL ENGINEER DATE

10-28-13
PLANS APPROVAL DATE

REGISTERED PROFESSIONAL ENGINEER HONGYUAN SU No. C58260 Exp. 6-30-16 CIVIL STATE OF CALIFORNIA

The State of California or its officers or agents shall not be responsible for the accuracy or completeness of electronic copies of this plan sheet.

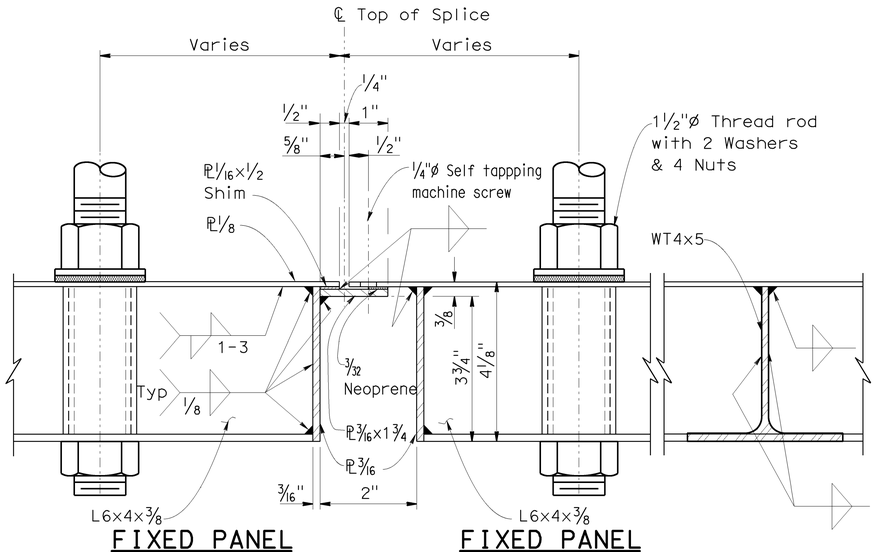

FIXED PANEL FIXED PANEL

SECTION A-A
@ INTERMEDIATE UNITS
Scale: 1/2" =1'-0"

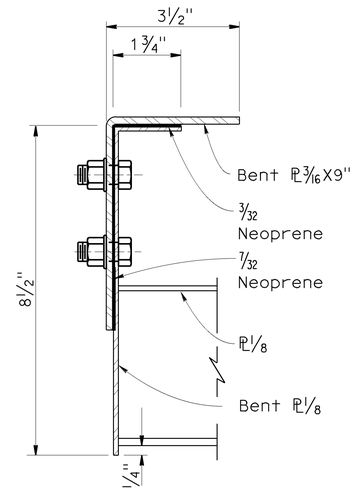

SECTION J-J
Scale: 1/2" =1'-0"

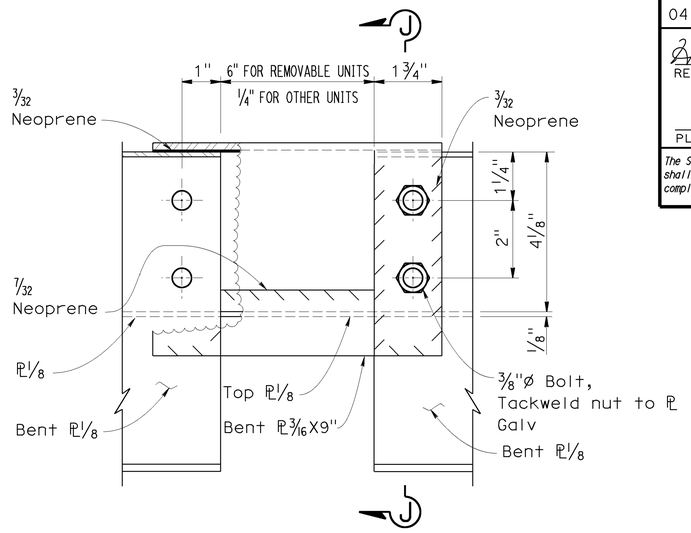

DETAIL D
@ PANEL SPLICE AREA
Scale: 1/2" =1'-0"

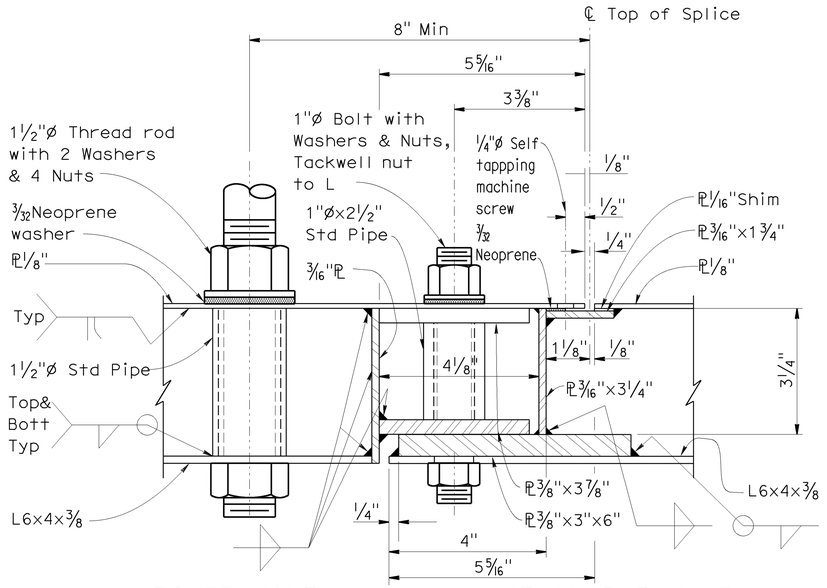

FIXED PANEL REMOVABLE PANEL

SECTION B-B
@ REMOVABLE UNITS
Scale: 1/2" =1'-0"

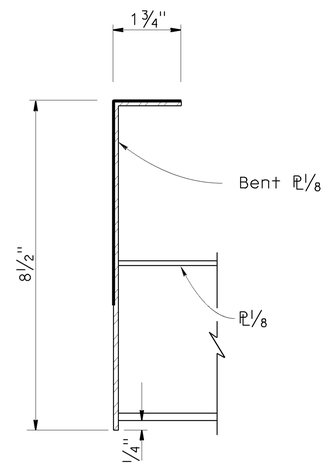

SECTION E-E
TYP. FOR ALL EDGE OF PANEL
Scale: 1/2" =1'-0"

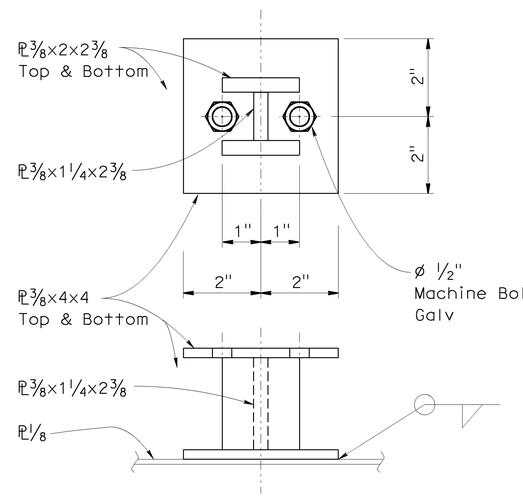

DETAIL F
WELDING ON REMOVABLE PANEL
Scale: 1/2" =1'-0"

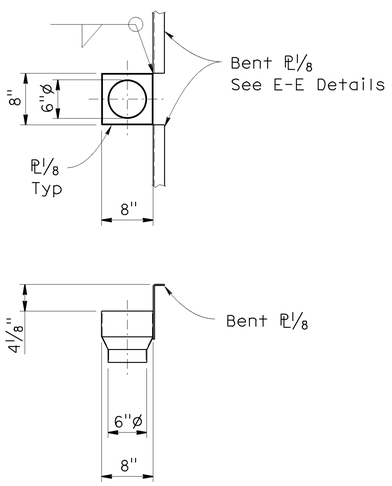

DETAIL G
DRAINAGE DETAIL
Scale: 1"=1'-0"

EXPANSION GRATING SHIELD, ACCESS LADDER AND GREASE LINE AT WEST SPAN PIERS
SAN FRANCISCO-OAKLAND BAY BRIDGE
SECTIONS & DETAILS

	BY	CHECKED
DESIGN	L. Ellis	H. Su
DETAILS	M. Yu	L. Ellis
QUANTITIES	L. Ellis	H. Su

STATE OF CALIFORNIA
DEPARTMENT OF TRANSPORTATION

DIVISION OF MAINTENANCE
STRUCTURE MAINTENANCE AND INVESTIGATIONS

BRIDGE NO. 34-0003
POST MILE 5.8/7.6

STRUCTURES DESIGN DETAIL SHEET (ENGLISH) (REV. 10/25/05)

ORIGINAL SCALE IN INCHES FOR REDUCED PLANS 0 1 2 3

UNIT: 04609
PROJECT NUMBER & PHASE: 0412000043

DISREGARD PRINTS BEARING EARLIER REVISION DATES 5-1-13 5-6-13 5-1-13 5-14-13

SHEET 5 OF 14

FILE => 05-04-sfobb-west-jst.dgn

USERNAME => s114592 DATE PLOTTED => 12-AUG-2014 TIME PLOTTED => 13:08

DIST	COUNTY	ROUTE	POST MILES TOTAL PROJECT	SHEET No	TOTAL SHEETS
04	SF	80	5.8/7.8	12	20

Hongyuan Su 07-25-14
REGISTERED CIVIL ENGINEER DATE

PLANS APPROVAL DATE

REGISTERED PROFESSIONAL ENGINEER
HONGYUAN SU
No. C58260
Exp. 6-30-16
CIVIL
STATE OF CALIFORNIA

The State of California or its officers or agents shall not be responsible for the accuracy or completeness of electronic copies of this plan sheet.

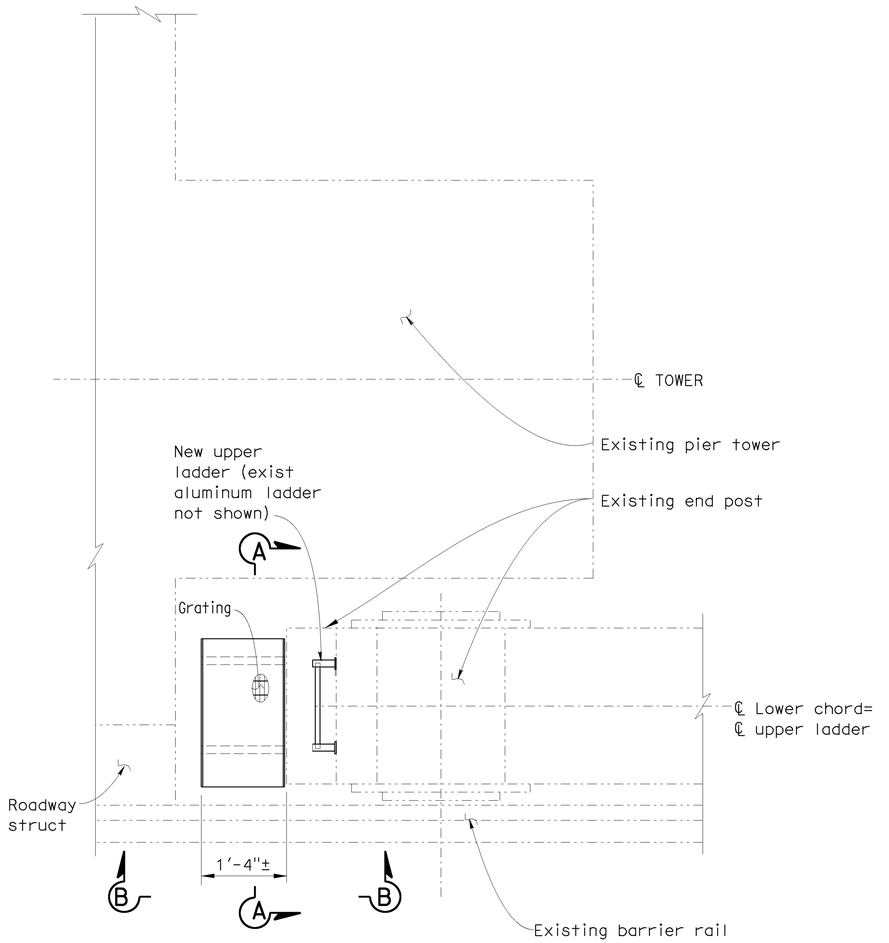

PLAN @ LOWER BRIDGE DECK LEVEL

¾"=1'-0"

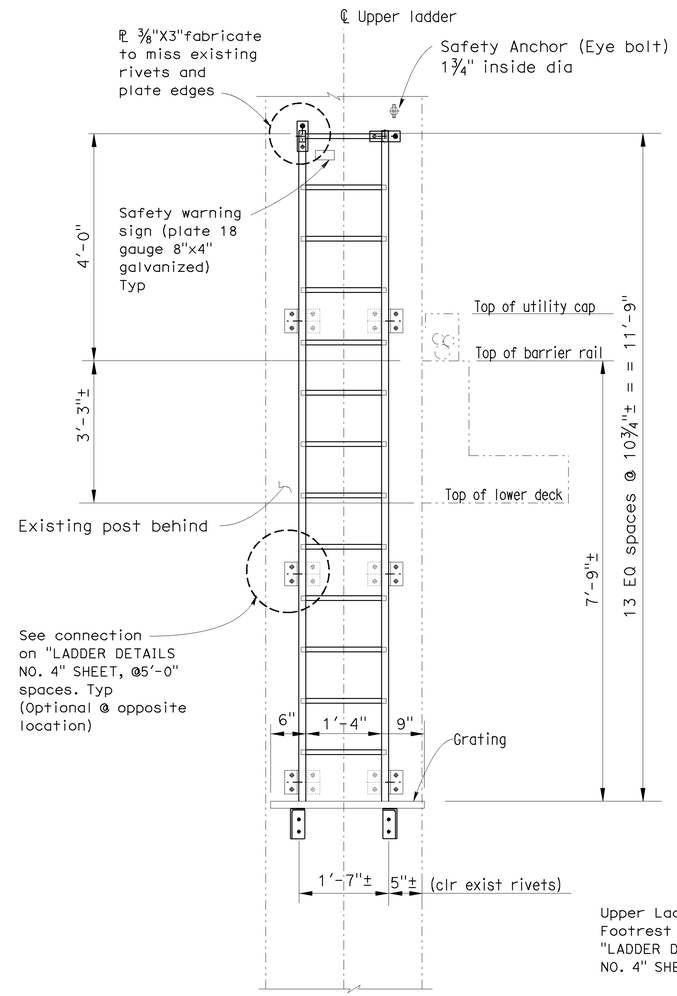

A-A

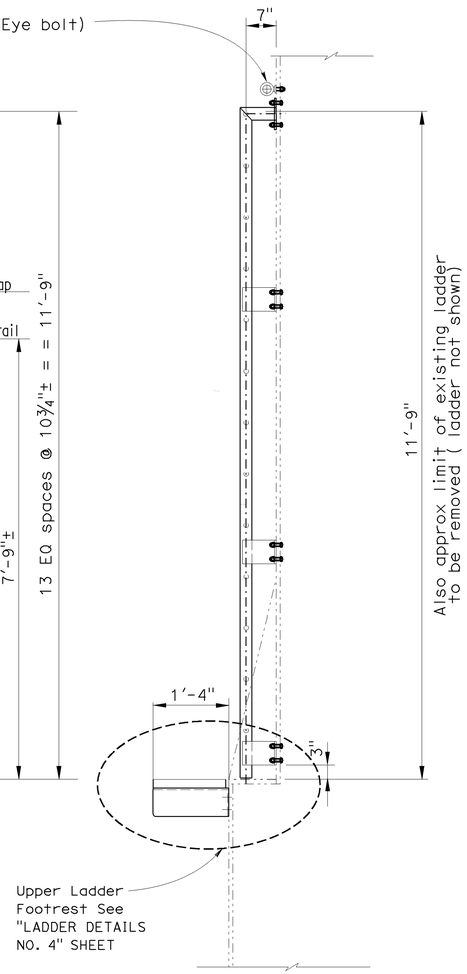

B-B

UPPER LADDER (W2, W3, W5, W6)

¾"=1'-0"

Note: Ladder safety system not shown for clarity

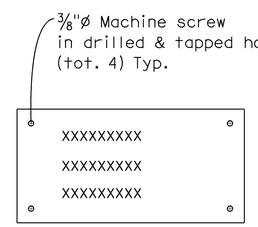

SAFETY WARNING SIGN

Stencil read:
"FALL PROTECTION IS REQUIRED WHILE ON THE LADDERS"

DESIGN	BY H. Su	CHECKED L. Ellis	STATE OF CALIFORNIA DEPARTMENT OF TRANSPORTATION	DIVISION OF MAINTENANCE STRUCTURE MAINTENANCE AND INVESTIGATIONS	BRIDGE NO. 34-0003
DETAILS	BY M. Yu	CHECKED H. Su			POST MILE 5.8/7.6
QUANTITIES	BY H. Su	CHECKED L. Ellis			

EXPANSION GRATING SHIELD, ACCESS LADDER AND GREASE LINE AT WEST SPAN PIERS
SAN FRANCISCO-OAKLAND BAY BRIDGE
LADDER DETAILS NO. 1

STRUCTURES DESIGN DETAIL SHEET (ENGLISH) (REV. 10/25/05)

ORIGINAL SCALE IN INCHES FOR REDUCED PLANS 0 1 2 3

UNIT: 04609
PROJECT NUMBER & PHASE: 0412000043

CONTRACT NO.: 04-3G4431

DISREGARD PRINTS BEARING EARLIER REVISION DATES → 7-14-14 | 7-21-14 | | 7-7-14

SHEET 6 OF 14

FILE => 06-04-sfobb-ladder-jst.dgn

USERNAME => s1114592 DATE PLOTTED => 12-AUG-2014 TIME PLOTTED => 13:08

DIST	COUNTY	ROUTE	POST MILES TOTAL PROJECT	SHEET No	TOTAL SHEETS
04	SF	80	5.8/7.8	13	20

Hongyuan Su 07-25-14
REGISTERED CIVIL ENGINEER DATE

PLANS APPROVAL DATE

REGISTERED PROFESSIONAL ENGINEER — HONGYUAN SU — No. C58260 — Exp. 6-30-16 — CIVIL — STATE OF CALIFORNIA

The State of California or its officers or agents shall not be responsible for the accuracy or completeness of electronic copies of this plan sheet.

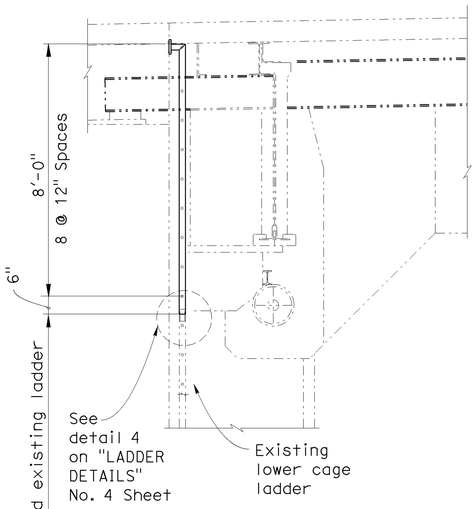

EXTEND EXISTING LADDER @ W5-NW

3/8"=1'-0"

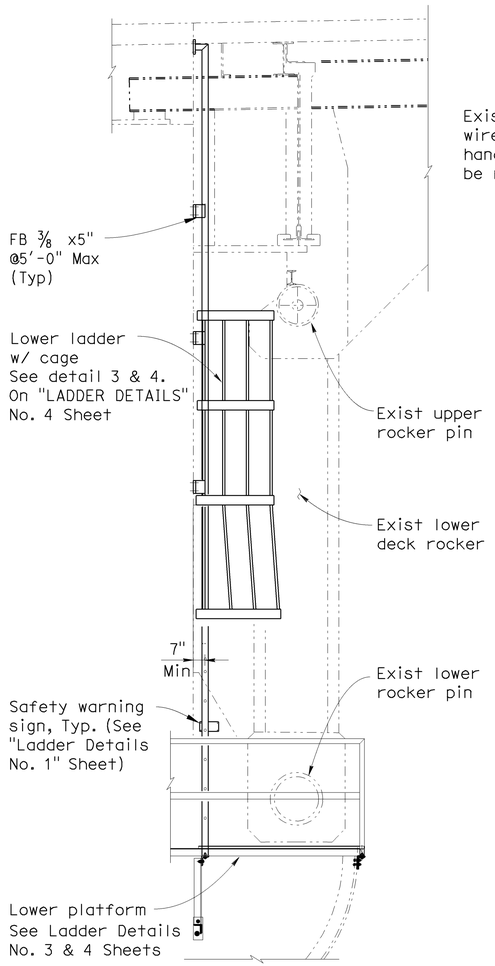

D-D

Reconstruct handrailing
Remove angle end post (12½"x2½"x5/16) and diagonal brace (1 1½"x1½"x¼") both filet welded to walkway angle (14x3x5/16); reinstall post and brace, as shown, with 5/8"h.s. Bolts (2 at base of post and one at bottom of brace after welds are ground smooth); then readjust ½"ø wire rope handrails.

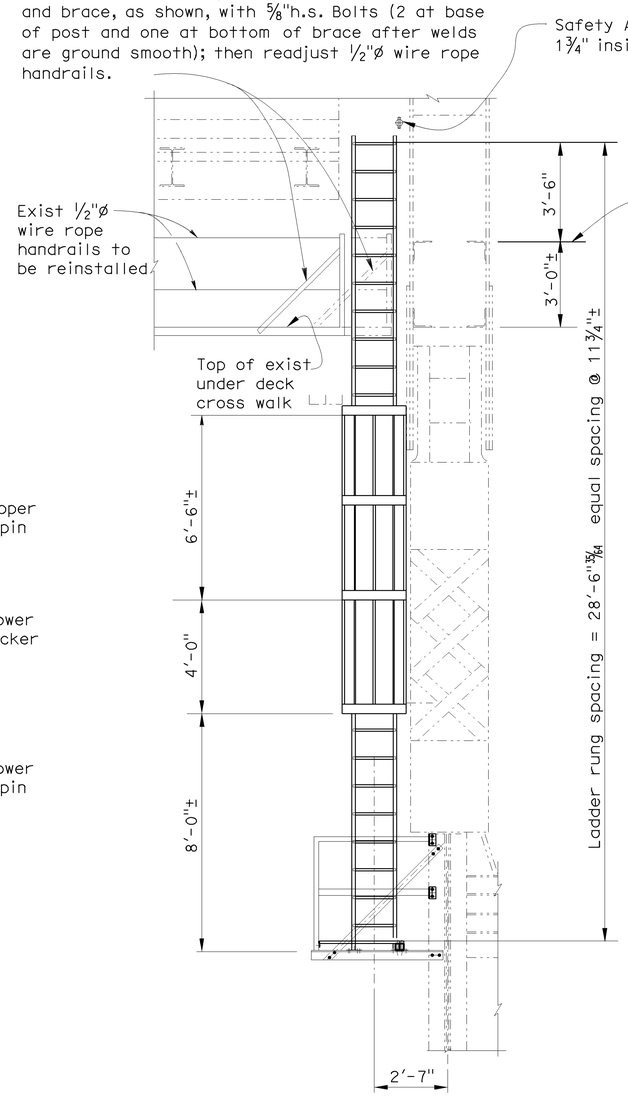

C-C

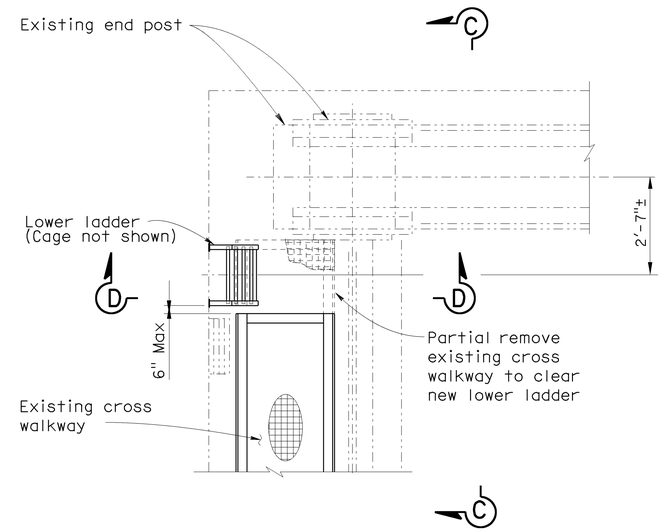

PLAN AT UPPER DECK CROSS WALKWAY LEVEL

½"=1'-0"

(Not all features shown for clarify)

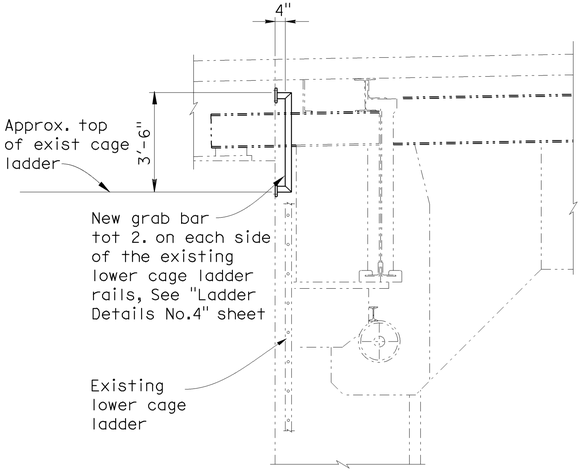

GRAB BAR INSTALLATION AT EXISTING LOWER LADDERS @ W2-NE, W3-NE, W6-NW

3/8"=1'-0"

LOWER LADDER (W2, W3, W5, W6)

3/8"=1'-0"

Note: Ladder safety system not shown for clarify

DESIGN	BY H. Su	CHECKED L. Ellis	STATE OF CALIFORNIA DEPARTMENT OF TRANSPORTATION	DIVISION OF MAINTENANCE STRUCTURE MAINTENANCE AND INVESTIGATIONS	BRIDGE NO. 34-0003	EXPANSION GRATING SHIELD, ACCESS LADDER AND GREASE LINE AT WEST SPAN PIERS	
DETAILS	BY M. Yu	CHECKED H. Su			POST MILE 5.8/7.6	SAN FRANCISCO-OAKLAND BAY BRIDGE	
QUANTITIES	BY H. Su	CHECKED L. Ellis				LADDER DETAILS NO. 2	

STRUCTURES DESIGN DETAIL SHEET (ENGLISH) (REV. 10/25/05)

ORIGINAL SCALE IN INCHES FOR REDUCED PLANS 0 1 2 3

UNIT: 04609 PROJECT NUMBER & PHASE: 0412000043 CONTRACT NO.: 04-3G443

DISREGARD PRINTS BEARING EARLIER REVISION DATES → 7-9-14 | 7-14-14 | 7-21-14 | 7-22-14

SHEET 7 OF 14

FILE => 07-04-sfobb-ladder-jst.dgn

USERNAME => s114592 DATE PLOTTED => 12-AUG-2014 TIME PLOTTED => 13:08

DIST	COUNTY	ROUTE	POST MILES TOTAL PROJECT	SHEET No	TOTAL SHEETS
04	SF	80	5.8/7.8	14	20

Hongyuan Su 07-25-14
REGISTERED CIVIL ENGINEER DATE

PLANS APPROVAL DATE

REGISTERED PROFESSIONAL ENGINEER — HONGYUAN SU — No. C58260 — Exp. 6-30-16 — CIVIL — STATE OF CALIFORNIA

The State of California or its officers or agents shall not be responsible for the accuracy or completeness of electronic copies of this plan sheet.

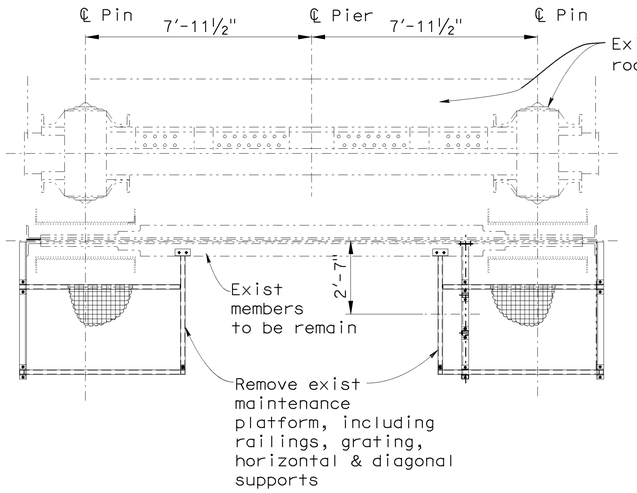

PLAN @ PLATFORM (EXISTING PLATFORM TO BE REMOVED)

⅜"=1'-0"

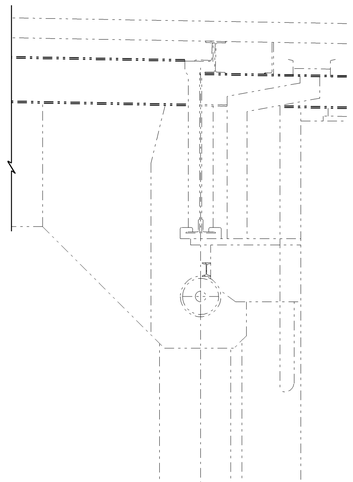

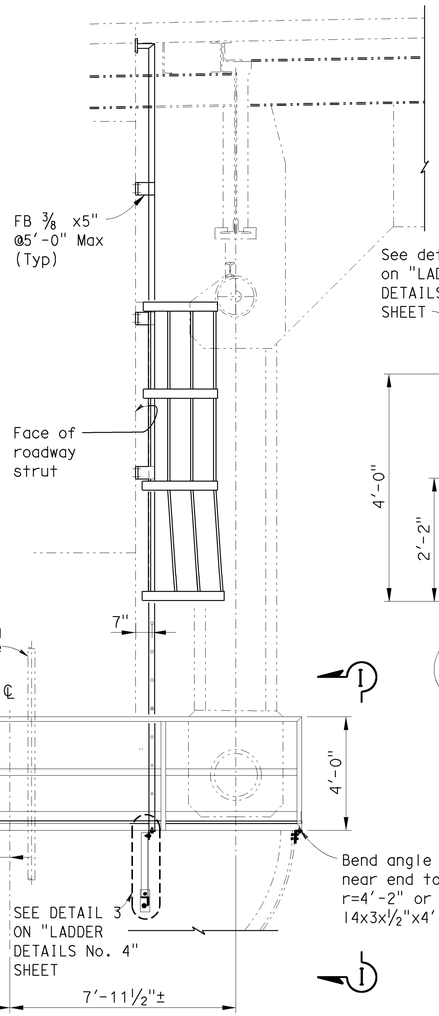

SECTION I-I

¾"=1'-0"

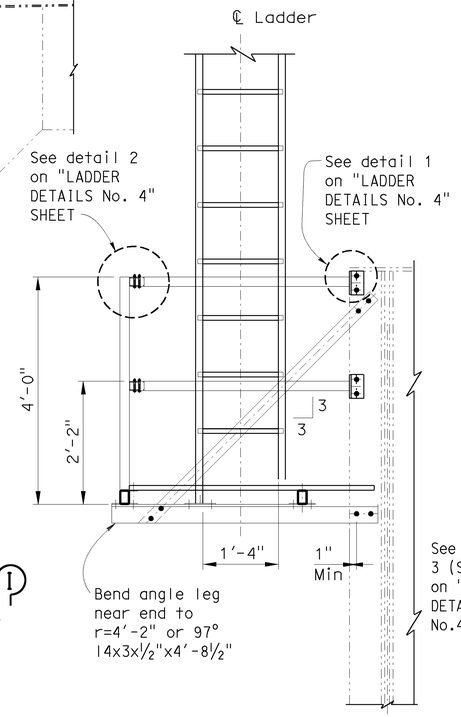

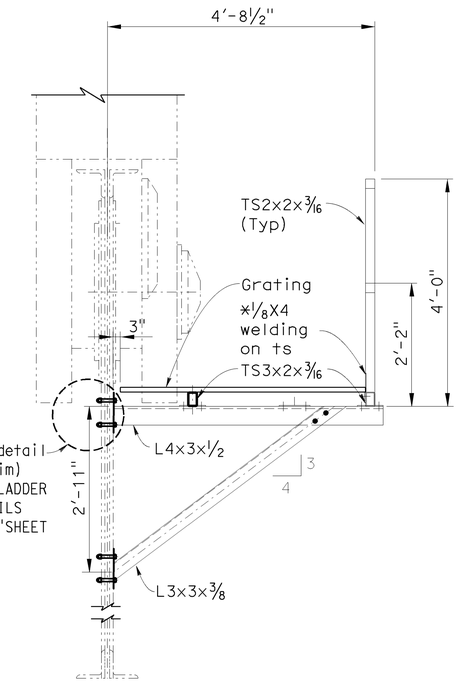

SECTION II-II

¾"=1'-0"

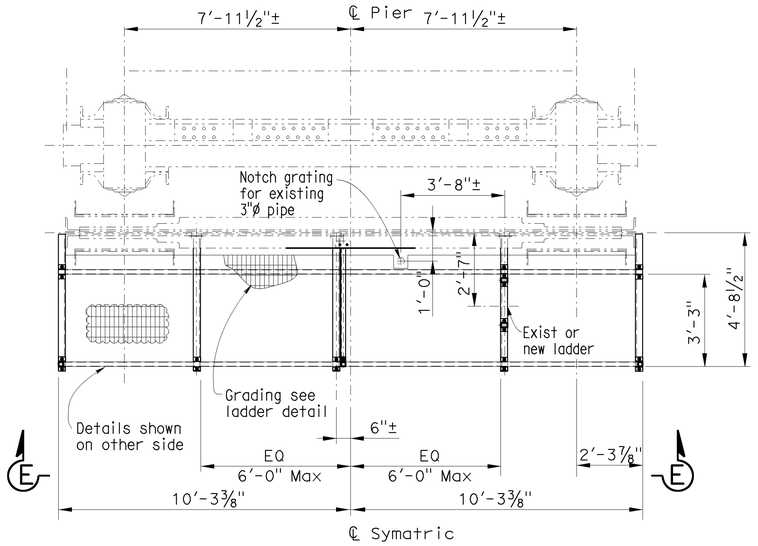

PLAN @ PLATFORM (NEW PLATFORM)

⅜"=1'-0"

SECTION E-E

⅜"=1'-0"

EXPANSION GRATING SHIELD, ACCESS LADDER AND GREASE LINE AT WEST SPAN PIERS

SAN FRANCISCO-OAKLAND BAY BRIDGE

LADDER DETAILS NO. 3

	BY	CHECKED
DESIGN	H. Su	L. Ellis
DETAILS	M. Yu	H. Su
QUANTITIES	H. Su	L. Ellis

STATE OF CALIFORNIA
DEPARTMENT OF TRANSPORTATION

DIVISION OF MAINTENANCE
STRUCTURE MAINTENANCE AND INVESTIGATIONS

BRIDGE NO. 34-0003
POST MILE 5.8/7.6

UNIT: 04609
PROJECT NUMBER & PHASE: 0412000043
CONTRACT NO.: 04-3G4431

DISREGARD PRINTS BEARING EARLIER REVISION DATES → 7-9-14 | 7-9-14 | 7-14-14

SHEET 8 OF 14

STRUCTURES DESIGN DETAIL SHEET (ENGLISH) (REV. 10/25/05)

ORIGINAL SCALE IN INCHES FOR REDUCED PLANS 0 1 2 3

FILE => 08-04-sfobb-ladder-jst.dgn

USERNAME => s114592 DATE PLOTTED => 12-AUG-2014 TIME PLOTTED => 13:08

DIST	COUNTY	ROUTE	POST MILES TOTAL PROJECT	SHEET No	TOTAL SHEETS
04	SF	80	5.8/7.8	15	20

Hongyuan Su — REGISTERED CIVIL ENGINEER — 07-25-14 DATE

PLANS APPROVAL DATE

The State of California or its officers or agents shall not be responsible for the accuracy or completeness of electronic copies of this plan sheet.

REGISTERED PROFESSIONAL ENGINEER — HONGYUAN SU — No. C58260 — Exp. 6-30-16 — CIVIL — STATE OF CALIFORNIA

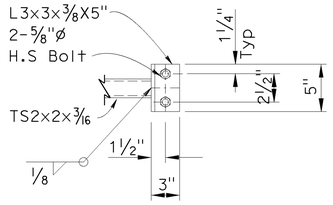

DETAIL 1
Scale: 1 1/2" =1'-0"

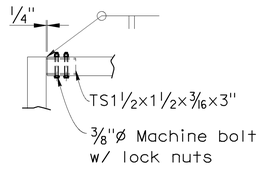

DETAIL 2
Scale: 1 1/2" =1'-0"

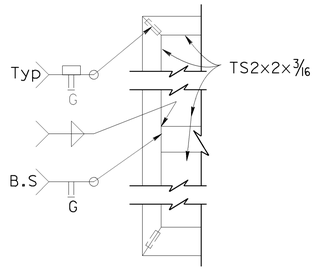

TUBING DETAIL
Scale: 1 1/2" =1'-0"

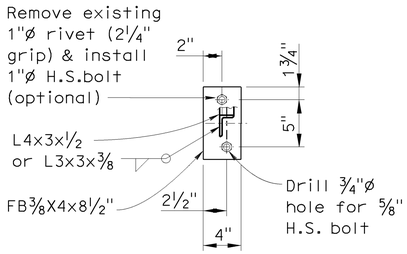

DETAIL 3
Scale: 1 1/2" =1'-0"

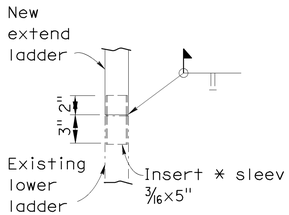

DETAIL 4
Scale: 1 1/2" =1'-0"

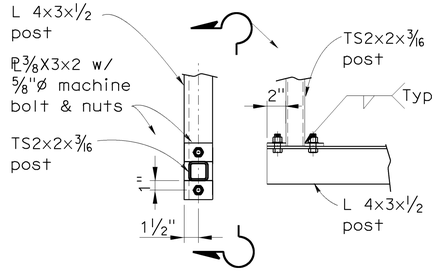

DETAIL 5
Scale: 1 1/2" =1'-0"

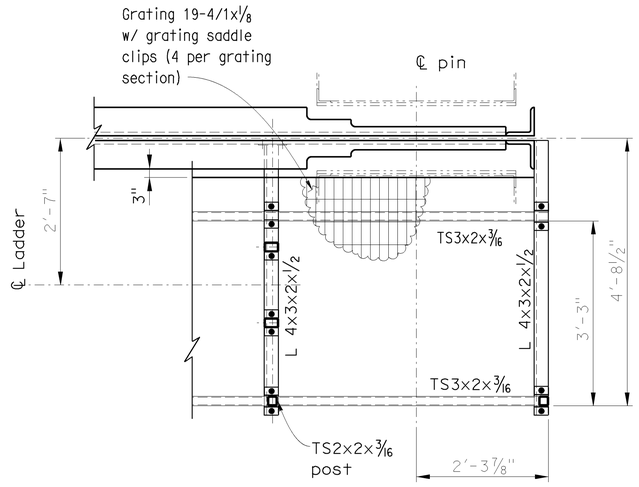

PLATFORM PARTIAL PLAN
Scale: 3/4" =1'-0"

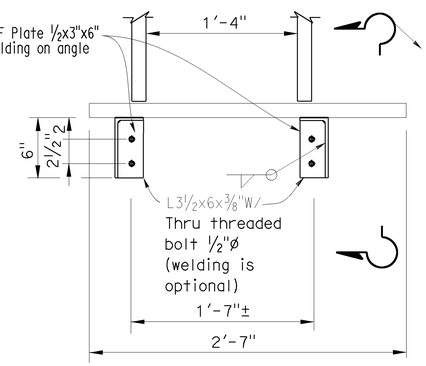

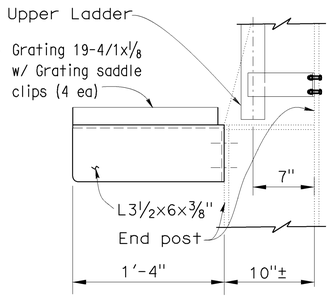

UPPER LADDER FOOTREST
Scale: 1 1/2" =1'-0"

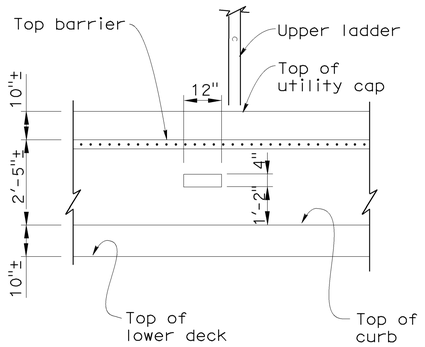

STEP HOLE DETAIL IN BARRIER
Scale: 1/2" =1'-0"

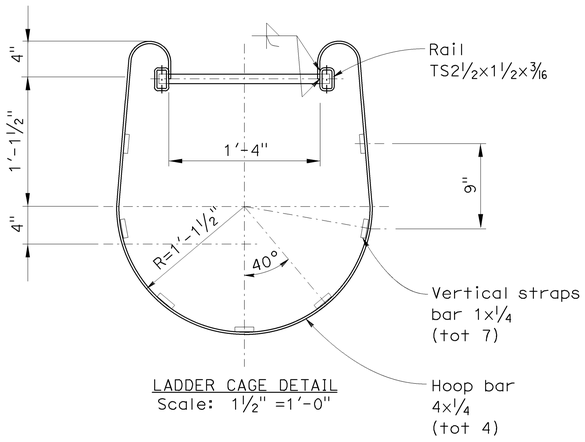

LADDER CAGE DETAIL
Scale: 1 1/2" =1'-0"

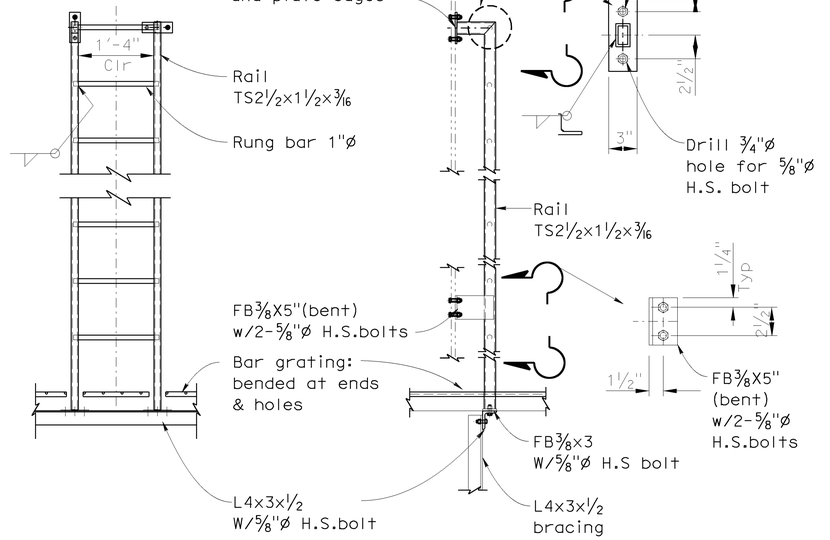

LADDER DETAIL (GRAB BAR SIMILAR TO RAIL)
Scale: 3/4" =1'-0"

EXPANSION GRATING SHIELD, ACCESS LADDER AND GREASE LINE AT WEST SPAN PIERS

SAN FRANCISCO-OAKLAND BAY BRIDGE

LADDER DETAILS NO. 4

	BY	CHECKED
DESIGN	H. Su	L. Ellis
DETAILS	M. Yu	H. Su
QUANTITIES	H. Su	L. Ellis

STATE OF CALIFORNIA
DEPARTMENT OF TRANSPORTATION

DIVISION OF MAINTENANCE
STRUCTURE MAINTENANCE AND INVESTIGATIONS

BRIDGE NO. 34-0003
POST MILE 5.8/7.6

STRUCTURES DESIGN DETAIL SHEET (ENGLISH) (REV. 10/25/05)

ORIGINAL SCALE IN INCHES FOR REDUCED PLANS 0 1 2 3

UNIT: 04609
PROJECT NUMBER & PHASE: 0412000043
CONTRACT NO.: 04-3G4431

DISREGARD PRINTS BEARING EARLIER REVISION DATES → 7-22-14 | 7-31-14 | 7-31-14

SHEET 9 OF 14

FILE => 09-04-sfobb-ladder-jst.dgn

USERNAME => s114592 DATE PLOTTED => 12-AUG-2014 TIME PLOTTED => 13:09

DIST	COUNTY	ROUTE	POST MILES TOTAL PROJECT	SHEET No	TOTAL SHEETS
04	SF	80	5.8/7.8	16	20

Hongyuan Su 05-17-13
REGISTERED CIVIL ENGINEER DATE

10-28-13
PLANS APPROVAL DATE

REGISTERED PROFESSIONAL ENGINEER — HONGYUAN SU — No. C58260 — Exp. 6-30-16 — CIVIL — STATE OF CALIFORNIA

The State of California or its officers or agents shall not be responsible for the accuracy or completeness of electronic copies of this plan sheet.

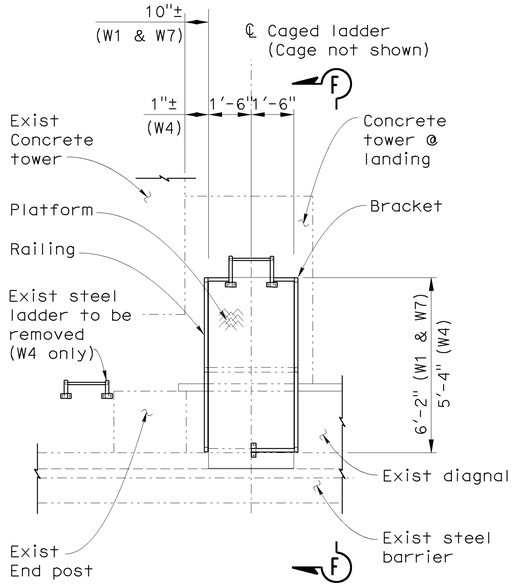

PLAN @ TOP BARRIER RAIL (W1,W4,W7)

3/8"=1'-0"

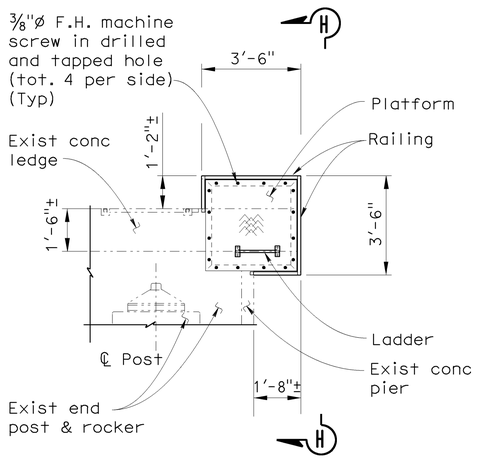

PLAN @ LANDING (W4)

3/8"=1'-0"

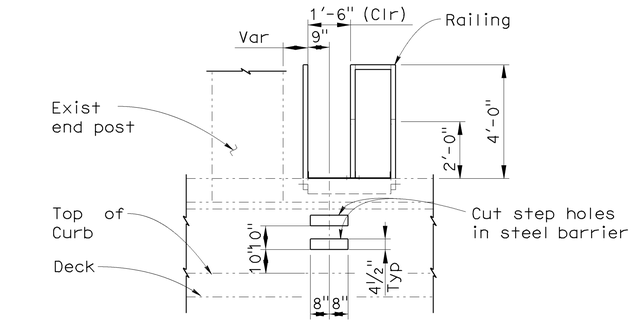

ELEVATION (DECK VIEW)

3/8"=1'-0"

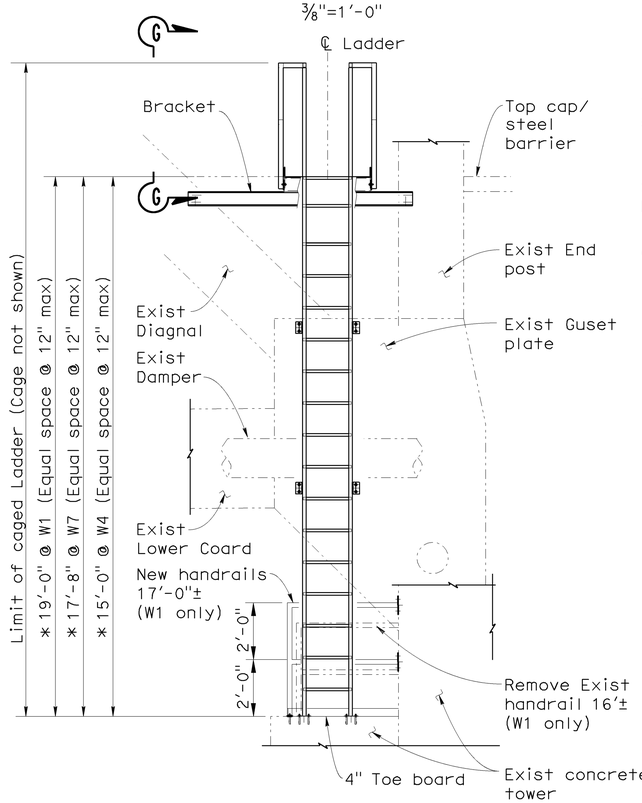

* Exact dimension to be verified by Contractor before fabrication

ELEVATION (SIDE VIEW)

3/8"=1'-0"
(W1 shown, others similar)

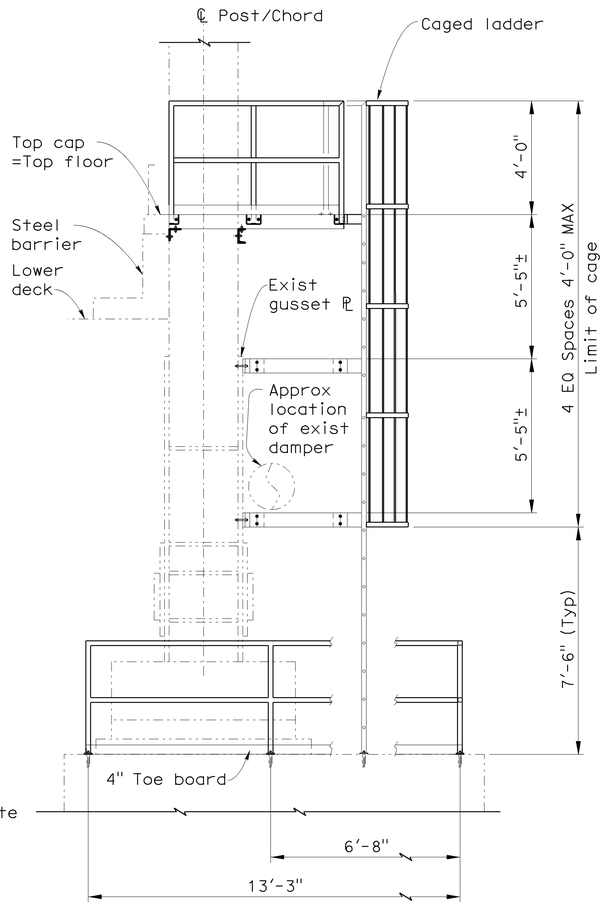

SECTION F-F

3/8"=1'-0"

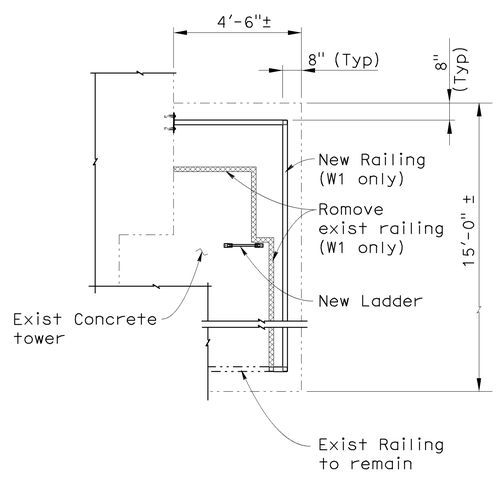

PLAN @ LANDING (W1 & W7)

3/8"=1'-0"

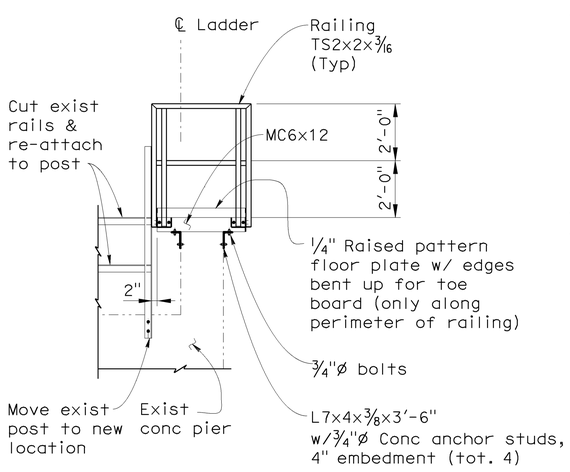

SECTION H-H

3/8"=1'-0"

Note:
1. See "LADDER DETAILS NO. 6" for additional details.

EXPANSION GRATING SHIELD, ACCESS LADDER AND GREASE LINE AT WEST SPAN PIERS

SAN FRANCISCO-OAKLAND BAY BRIDGE

LADDER DETAILS NO. 5

	BY	CHECKED
DESIGN	H. Su	L. Ellis
DETAILS	M. Yu	H. Su
QUANTITIES	H. Su	L. Ellis

STATE OF CALIFORNIA
DEPARTMENT OF TRANSPORTATION

DIVISION OF MAINTENANCE
STRUCTURE MAINTENANCE AND INVESTIGATIONS

BRIDGE NO. 34-0003
POST MILE 5.8/7.6

UNIT: 04609
PROJECT NUMBER & PHASE: 0412000043
CONTRACT NO.: 04-3G4431

DISREGARD PRINTS BEARING EARLIER REVISION DATES →

5-1-13	5-8-13	5-21-13	8-20-13

SHEET 10 OF 14

STRUCTURES DESIGN DETAIL SHEET (ENGLISH) (REV. 10/25/05)

ORIGINAL SCALE IN INCHES FOR REDUCED PLANS 0 1 2 3

FILE => 10-04-sfobb-ladder-jst.dgn

USERNAME => s114592 DATE PLOTTED => 12-AUG-2014 TIME PLOTTED => 13:09

DIST	COUNTY	ROUTE	POST MILES TOTAL PROJECT	SHEET No	TOTAL SHEETS
04	SF	80	5.8/7.8	17	20

Hongyuan Su 05-17-13
REGISTERED CIVIL ENGINEER DATE

10-28-13
PLANS APPROVAL DATE

REGISTERED PROFESSIONAL ENGINEER — HONGYUAN SU No. C58260 Exp. 6-30-16 CIVIL — STATE OF CALIFORNIA

The State of California or its officers or agents shall not be responsible for the accuracy or completeness of electronic copies of this plan sheet.

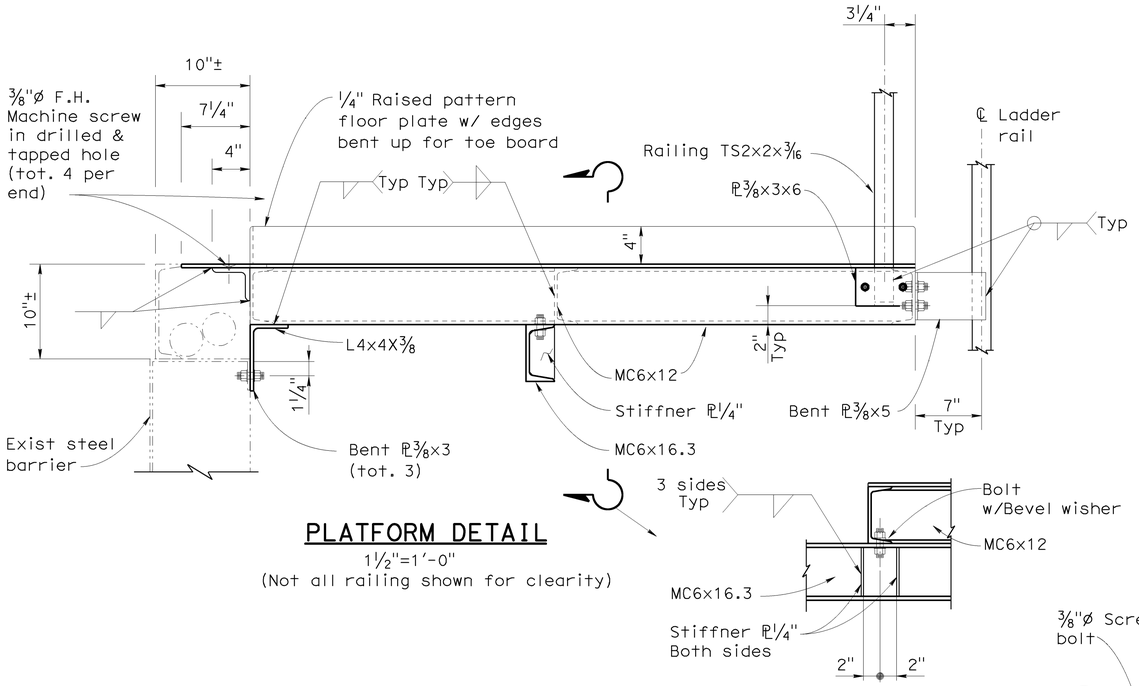

PLATFORM DETAIL

1½"=1'-0"
(Not all railing shown for clearity)

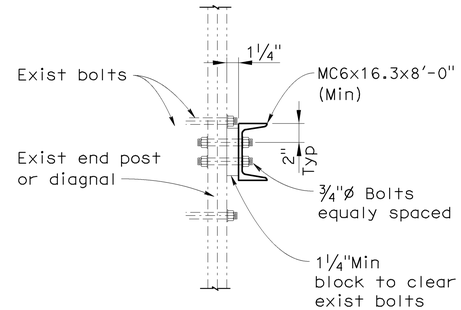

MC6x16.3 BEAM CONNECTION

1½"=1'-0"

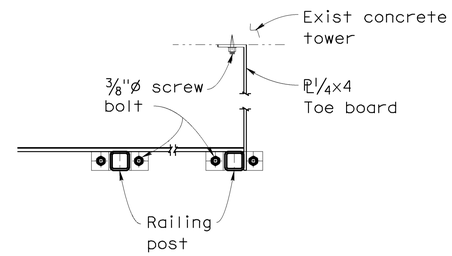

TOE BOARD DETAIL (W1)

1½"=1'-0"

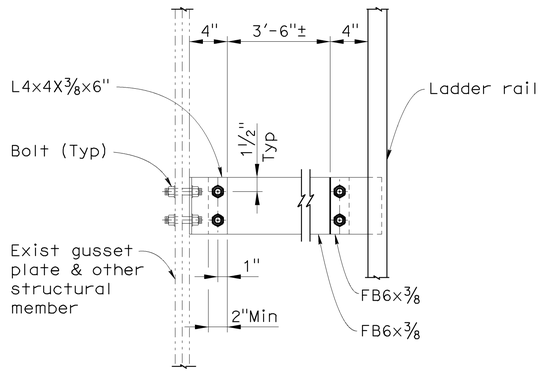

LADDER BRACKETS

1½"=1'-0"

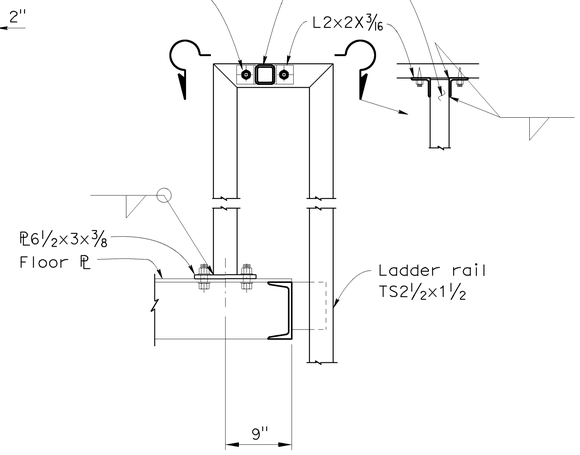

SECTION G-G

1½"=1'-0"

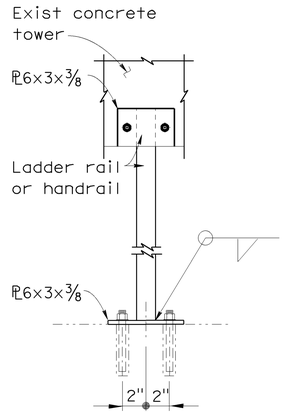

LADDER/POST - CONCRETE CONNECTION

1½"=1'-0"

Note:
1. All bolt ⅝" ø, except specified otherwise.
2. Ladder details not shown see "LADDER DETAILS NO. 4" sheet.

EXPANSION GRATING SHIELD, ACCESS LADDER AND GREASE LINE AT WEST SPAN PIERS

SAN FRANCISCO-OAKLAND BAY BRIDGE

LADDER DETAILS NO. 6

	BY	CHECKED
DESIGN	H. Su	L. Ellis
DETAILS	M. Yu	H. Su
QUANTITIES	H. Su	L. Ellis

STATE OF CALIFORNIA
DEPARTMENT OF TRANSPORTATION

DIVISION OF MAINTENANCE
STRUCTURE MAINTENANCE AND INVESTIGATIONS

BRIDGE NO. 34-0003
POST MILE 5.8/7.6

STRUCTURES DESIGN DETAIL SHEET (ENGLISH) (REV. 10/25/05)

ORIGINAL SCALE IN INCHES FOR REDUCED PLANS 0 1 2 3

UNIT: 04609
PROJECT NUMBER & PHASE: 0412000043

CONTRACT NO.: 04-3G4431

DISREGARD PRINTS BEARING EARLIER REVISION DATES → 5-3-13 | 5-6-13 | | 3-31-13

SHEET 11 OF 14

FILE => 11-04-sfobb-ladder-jst.dgn

USERNAME = s114592 DATE PLOTTED => 12-AUG-2014 TIME PLOTTED => 13:09

DIST.	COUNTY	ROUTE	POST MILES TOTAL PROJECT	SHEET NO.	TOTAL SHEETS
04	SF	80	5.8/7.8	18	20

Christopher M. Faria 5/17/13
REGISTERED MECHANICAL ENGINEER — DATE

REGISTERED PROFESSIONAL ENGINEER
Christopher M Faria
No. M30419
Exp. 12/31/15
MECH
STATE OF CALIFORNIA

10-28-13
PLANS APPROVAL DATE

The State of California or its officers or agents shall not be responsible for the accuracy or completeness of electronic copies of this plan sheet.

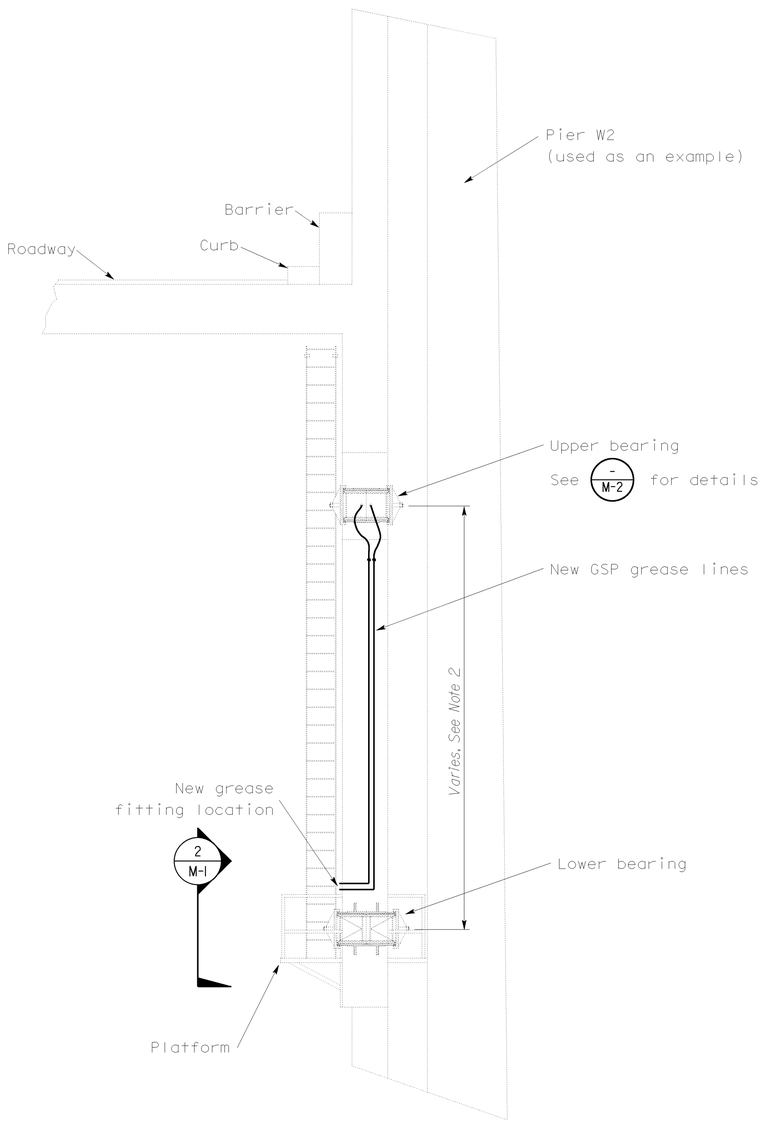

1 TYPICAL PIER
North Side, Looking West
No scale

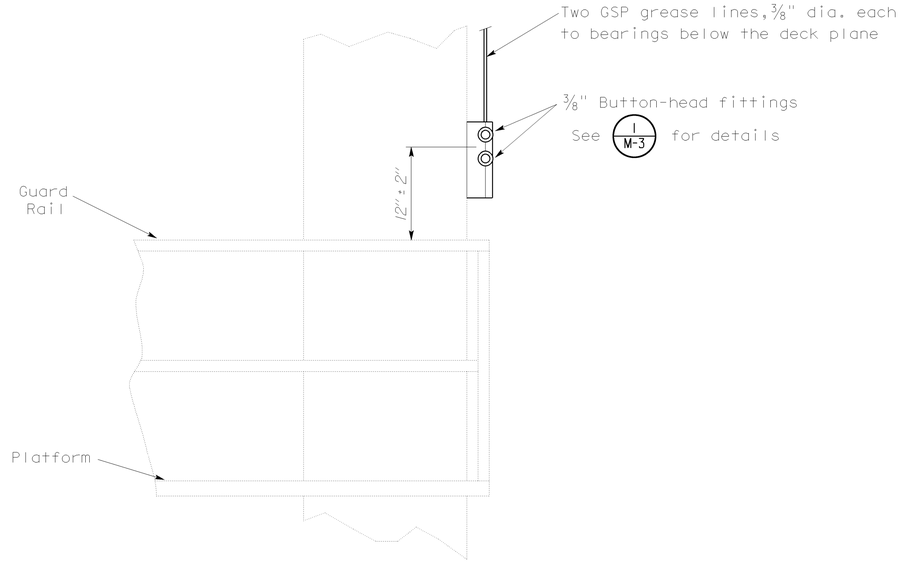

2 GREASE POINTS - AT PLATFORM
No scale

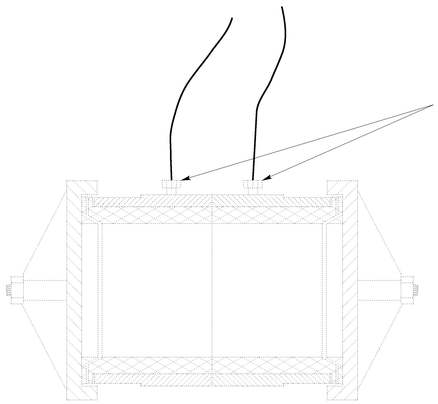

3 GREASE POINTS - AT UPPER BEARING
No scale

NOTES

1. For the upper bearing, the existing grease fittings are located in the center body of the bearing housing.
2. The distace from the center of the upper bearing to the center of the lower bearing is approximately 20 ft. This distance varies at each location by +/- 3 ft.
3. Before removing the (E) grease fittings from the bearings, clean the area around them to prevent foreign material entry into the bearing. Also, before removal, apply 5 to 6 pumps of grease from a hand-operated grease gun to each fitting. Grease must be the same as that used by Caltrans maintenance.
4. At both the upper and lower bearings, after cleaning and before any connections are made, remove one of the grease fittings and pump grease into the other grease fitting. After several pumps grease should come out of the hole at the removed grease fitting. Contact the Engineer if it does not.
5. Before connecting any lines to the bearing, fill each line with the appropriate grease by opening the pipe at platform level and filling the pipe from the bottom. This is to prevent any air pockets from being trapped in the lines.
6. All grease line parts must be kept capped or otherwise sealed until ready for assembly. Blow out the assembled line with clean dry air just prior to filling it with grease.

ALL DIMENSION IN INCHES UNLESS OTHERWISE NOTED
THIS DRAWING ACCURATE FOR MECHANICAL WORK ONLY

	BY	CHECKED
DESIGN	C. Farla	Michael White
DETAILS	C. Farla	Michael White
QUANTITIES	C. Farla	Michael White

STATE OF CALIFORNIA
DEPARTMENT OF TRANSPORTATION

DIVISION OF ENGINEERING SERVICES
ELECTRICAL-MECHANICAL-WATER AND WASTEWATER DESIGN

BRIDGE NO. 34-0003
POST MILE 5.8/7.6

SFOBB ROCKER BEARING GREASE LINES
GENEREAL VIEW AND LINE LAYOUT

SHEET M-1

DOES SD Imperial Rev. 1/07

ORIGINAL SCALE IN INCHES FOR REDUCED PLANS 0 1 2 3

CU 3615
ID 0412000043

DISREGARD PRINTS BEARING EARLIER REVISION DATES →

REVISION DATES (PRELIMINARY STAGE ONLY)								SHEET	OF
05/25/07	06/14/07	12/28/11	09/20/12	09/24/12	08/21/13			12	14

12-AUG-2014 13:10

FILE => SFOBB Grease_01.dgn

DIST.	COUNTY	ROUTE	POST MILES TOTAL PROJECT	SHEET NO.	TOTAL SHEETS
04	SF	80	5.8/7.8	19	20

Christopher M. Faria 5/17/13
REGISTERED MECHANICAL ENGINEER — DATE

REGISTERED PROFESSIONAL ENGINEER
Christopher M Faria
No. M30419
Exp. 12/31/15
MECH
STATE OF CALIFORNIA

10-28-13
PLANS APPROVAL DATE

The State of California or its officers or agents shall not be responsible for the accuracy or completeness of electronic copies of this plan sheet.

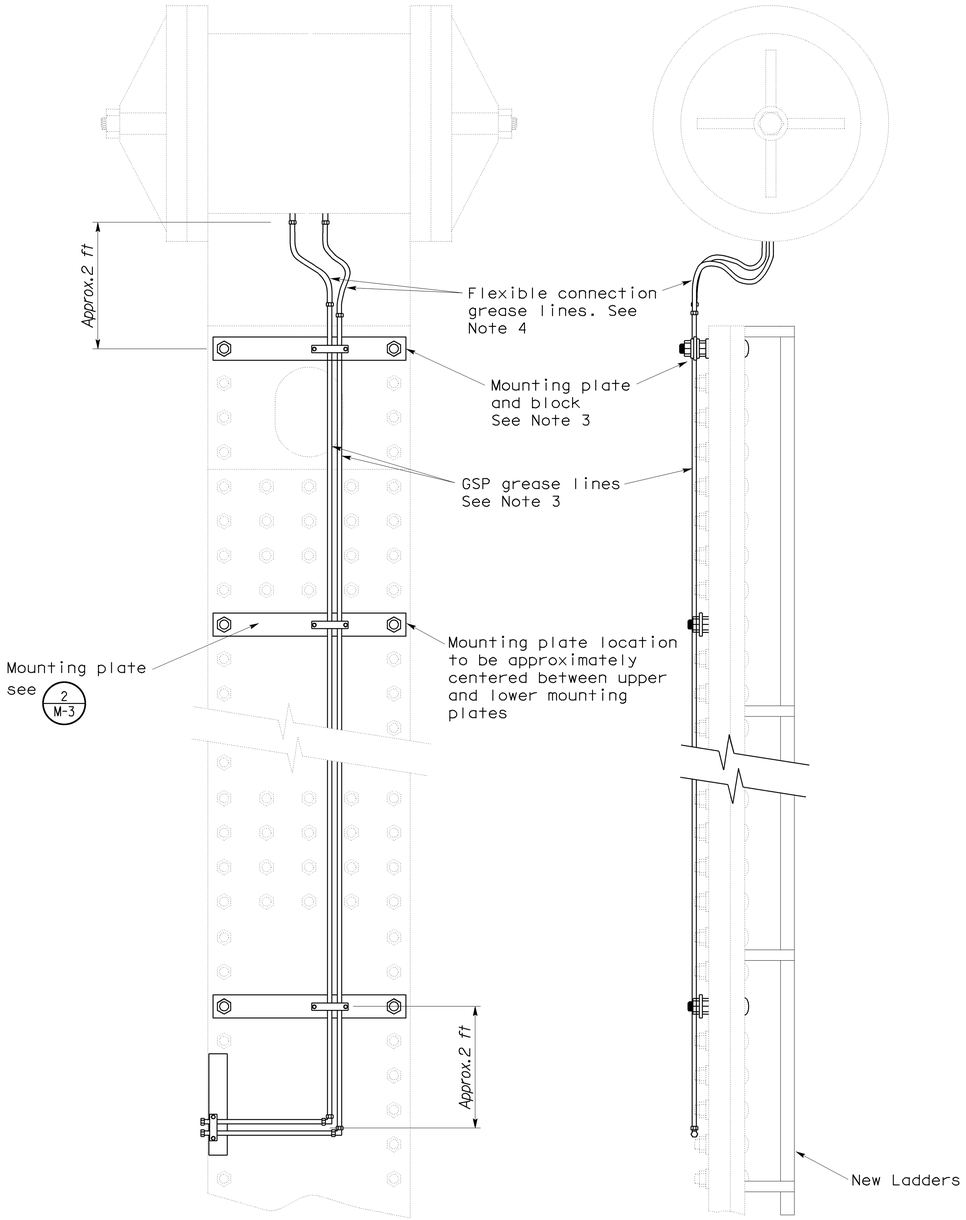

1 UPPER BEARING DETAILS

No scale

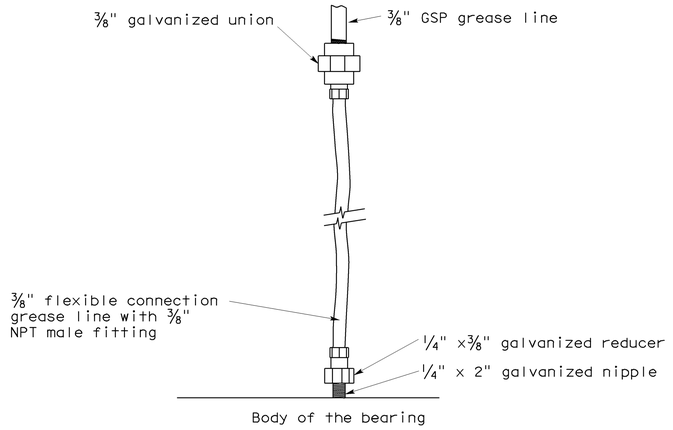

2 FLEX HOSE CONNECTIONS (Typ)

No scale

NOTES

1. The GSP grease lines must be ASTM A-53, Type S, Grade B, 3/8" dia, and hot dip galvanized.
2. The flexible connections must be rated for 5,000 psi and specifically for grease line use.
3. Detail 1 shows a generic mounting of the GSP grease lines. They are to be mounted on the opposite side of the column from the ladders at all locations. This may require that the new bolt be placed in the opposite direction as the removed bolt.
4. The length of the flexible connections may vary by location depending on obstructins and routing. In all cases, they must be long enough to allow movement of the arms.

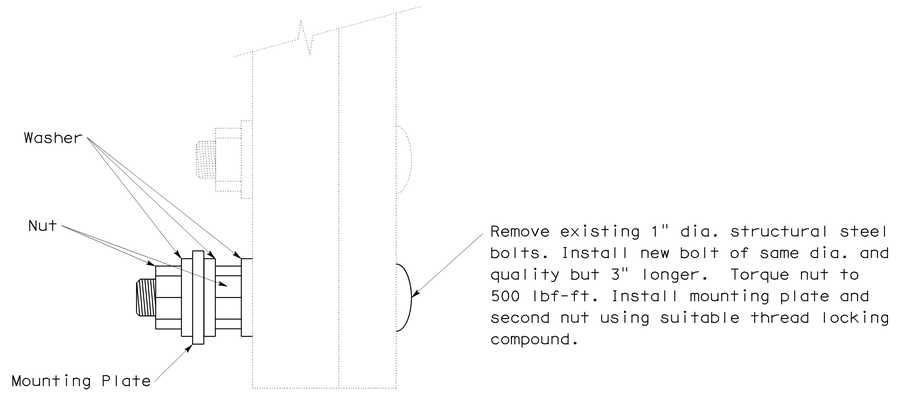

3 MOUNTING PLATE ATTACHMENT

No scale

ALL DIMENSION IN INCHES UNLESS OTHERWISE NOTED
THIS DRAWING ACCURATE FOR MECHANICAL WORK ONLY

	BY	CHECKED
DESIGN	C. Faria	Michael White
DETAILS	C. Faria	Michael White
QUANTITIES	C. Faria	Michael White

STATE OF CALIFORNIA
DEPARTMENT OF TRANSPORTATION

DIVISION OF ENGINEERING SERVICES
ELECTRICAL-MECHANICAL-WATER AND WASTEWATER DESIGN

CU 3615
ID 0412000043

BRIDGE NO.	POST MILE
34-0008	5.8/7.6

SFOBB ROCKER BEARING GREASE LINES

GREASE LINE DETAILS I

SHEET M-2

DISREGARD PRINTS BEARING EARLIER REVISION DATES →

REVISION DATES (PRELIMINARY STAGE ONLY)							SHEET	OF
05/25/07	06/14/07	12/28/11	09/20/12	09/24/12	08/21/13		13	14

DOES SD Imperial Rev.1/07

ORIGINAL SCALE IN INCHES FOR REDUCED PLANS 0 1 2 3

12-AUG-2014 13:10

FILE => SFOBB Grease_02.dgn

SFOBB Grease_02.dgn

DIST.	COUNTY	ROUTE	POST MILES TOTAL PROJECT	SHEET NO.	TOTAL SHEETS
04	SF	80	5.8/7.8	20	20

Christopher M. Faria 5/17/13
REGISTERED MECHANICAL ENGINEER — DATE

REGISTERED PROFESSIONAL ENGINEER
Christopher M Faria
No. M30419
Exp. 12/31/15
MECH
STATE OF CALIFORNIA

10-28-13
PLANS APPROVAL DATE

The State of California or its officers or agents shall not be responsible for the accuracy or completeness of electronic copies of this plan sheet.

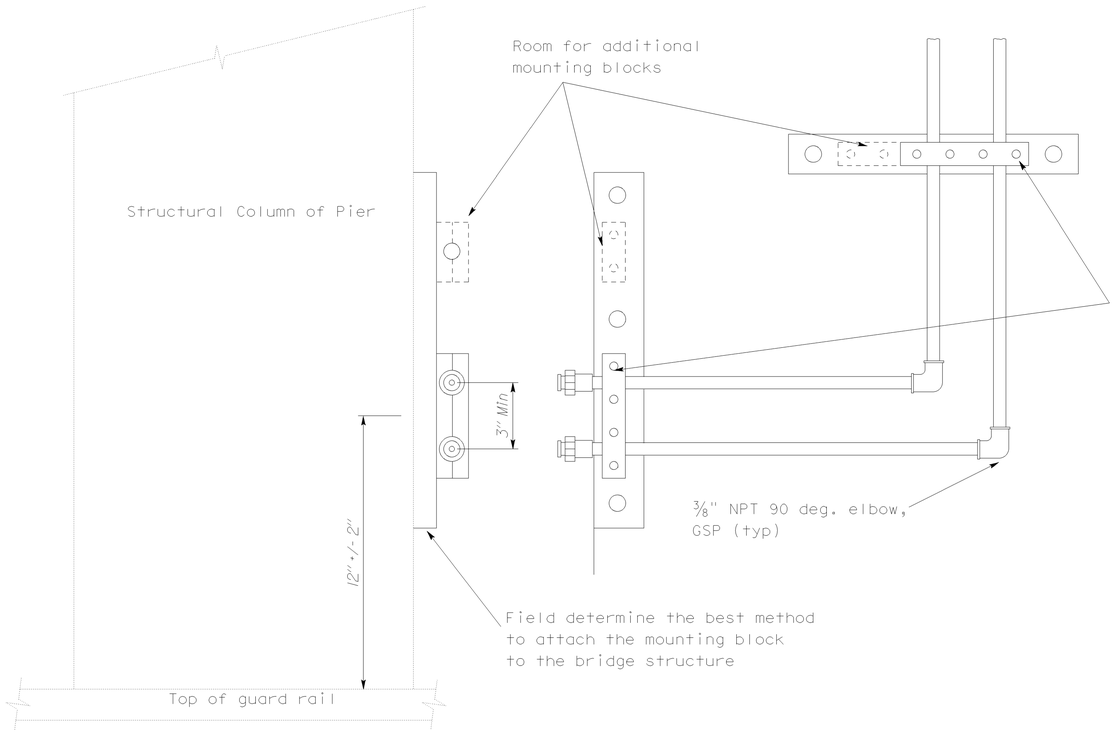

1 GREASE LINE LAYOUT AT PLATFORM

No scale

NOTES

1. All plate must be ASTM A 36 steel and galvanized to ASTM A 123 standards after fabrication.

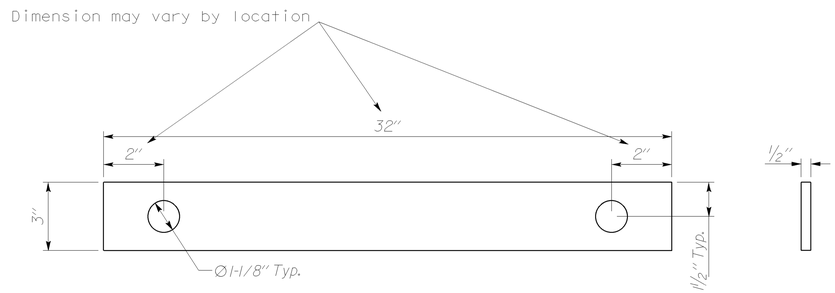

2 MOUNTING PLATE (Typ)

No scale

ALL DIMENSION IN INCHES UNLESS OTHERWISE NOTED
THIS DRAWING ACCURATE FOR MECHANICAL WORK ONLY

DESIGN	BY C. Faria	CHECKED Michael White	STATE OF CALIFORNIA DEPARTMENT OF TRANSPORTATION	DIVISION OF ENGINEERING SERVICES ELECTRICAL-MECHANICAL-WATER AND WASTEWATER DESIGN	BRIDGE NO. 34-0003
DETAILS	BY C. Faria	CHECKED Michael White			POST MILE 5.8/7.6
QUANTITIES	BY C. Faria	CHECKED Michael White			

SFOBB ROCKER BEARING GREASE LINES

GREASE LINE DETAILS II

SHEET M-3

DOES SD Imperial Rev. 1/07

ORIGINAL SCALE IN INCHES FOR REDUCED PLANS 0 1 2 3

CU 3615
ID 0412000043

DISREGARD PRINTS BEARING EARLIER REVISION DATES →

REVISION DATES (PRELIMINARY STAGE ONLY)								SHEET	OF
05/25/07	06/14/07	12/28/11	09/20/12	09/24/12	08/21/13			14	14

12-AUG-2014 13:10

SFOBB Grease_03.dgn

FILE => SFOBB Grease_03.dgn