INFORMATION HANDOUT

For Contract No. 04-3G1704
At 04-SF-101-3.4

Identified by
Project ID 0412000014

WATER QUALITY

Water Quality Information Handout

MATERIALS INFORMATION

Foundation Report

Preliminary Site Investigation Report

OTHERS

Retaining Wall As-Builts Project 04-246804

WATER QUALITY INFORMATION HANDOUT
CONTRACT NO: 04-3G1704
04-SF-101-PM 3.4

Rock Slope protection & Soldier Pile Wall

California Department of Transportation
District 04
Office of Water Quality
111 Grand Avenue, Oakland, CA 94612

January, 2015

Disclaimer

A "Disclaimer" is required specifying that the information provided in Water Quality Information Handout is just a guideline and is to be used for information purposes only and should not be considered a sole source document to adhere to the requirements of the new National Pollutant Discharge Elimination System (NPDES) Construction General Permit (CGP), Number CAS000002, adopted on September 2, 2009. The contractor is required to provide water quality monitoring, sampling and implement best management practices (BMPs) based on standard industry operations, field conditions and conditions encountered based on the contractor's means and methods. The information in this handout is not to be construed in any way as a waiver of the provisions in the CGP. Bidders and contractors are cautioned to make independent investigations and examinations as they deem necessary to satisfy the conditions encountered in performance of work, with respect to the following: sampling and monitoring locations, distribution of watershed areas for sizing of BMPs, and selection of BMPs in order to conform to the requirement of the contract documents and the CGP.

TABLE OF CONTENTS
CONTRACT NO: 04-3G1704

1 PROJECT INFORMATION

1A Project Description

2 CONSTRUCTION GENERAL PERMIT

3 TEMPORARY CONSTRUCTION SITE BMPs

5 ATTACHMENTS

A LOCATION MAP

B ESTIMATED SEEPAGE RATE IN PROJECT AREA

C LIST OF PUBLICLY OWNED TREATMENT WORK (POT) FACILITY

D POTW SERVICE AREA MAP

E PROJECT DISCHARGE LOCATION PLAN

F DEWATERING LOCATION PLAN

1 Project Information

1A Project Description

The project proposes to repair a slip out on a cut slope with rock slope protection and to install a soldier pile retaining wall. The slip out is located along NB US-101 at the 23rd Avenue overcrossing in the City and County of San Francisco, California, at Post Mile 3.4. The slip out was a result of a broken water line on Kansas Street. The slip out is approximately 40 ft wide at top and 65 ft wide at the bottom. The length of the slip out is approximately 65 feet. The head scarp is approximately 8 feet in height. The city of San Francisco has repaired the water line and backfilled the upper part of the slip out to just beyond the Right of Way line

A soldier pile retaining wall will be constructed at the toe of the slope. The soldier pile retaining wall is approximately 12 to 14 feet high and 70 feet long. Construction of the retaining wall will involve drilling holes for Cast-in-drilled-hole (CIDH) pile foundations. Steel soldier piles will be installed in the holes and treated wood lagging will be inserted between steel soldier piles. For safety reasons, a chain link fence will be installed on top of the wall. The estimated total volume of soil excavation is 600 cubic yards. The slope behind the wall will be backfilled with a 1.75:1 slope. Total disturbed soil area (DSA) would be about 0.05 acres. DSA includes works at slip out area. All disturbed soil area will be treated with erosion control measures (erosion control Type-D and fiber rolls). Surplus excavated material shall be disposed outside the highway right of way.

All work will be within the existing State right of way. Standard lane / shoulder closures will be used. Coordination with the City of San Francisco for handling traffic on Kansas Street during construction is required. The project location is depicted on Attachment A.

2 Construction General Permit

This project must comply with the conditions of the Caltrans Statewide National Pollutant Discharge Elimination System (NPDES) Permit (No. CAS000002) or Construction General Permit (No. 2009-0009- DWQ) or San Francisco Bay Regional Water Quality Control Board Municipal NPDES Permit (No. R2-2009-0074).A Water Pollution Control Program (WPCP) is required since the disturbed soil area is less the 1.0 acres at the project site. Risk level determination or analysis is not applicable since it is WPCP project.

3 Temporary Construction Site BMPs

Best Management Practices (BMPs) shall be implemented to address the temporary water quality impacts resulting from the construction activities in the project. BMPs includes the measures of temporary soil stabilization, temporary sediment control, wind erosion control, tracking control, non-storm water management, and waste management/materials pollution control. Appropriate BMPs and their quantities were developed during the PS & E phase.

Groundwater is expected to encounter during deep excavations and pile driving operation and dewatering will be required. Temporary Dewatering and Non-Storm Water Discharge Control

System will be needed for project. A Seepage (Flow) Rate memorandum from Geotech is attached.

The specification allows discharging into a POTW system. If groundwater, stormwater, or both are discharged to a POTW, the Contractor needs to obtain a municipal batch discharge permit and is responsible for all costs and requirements related to obtaining the municipal batch discharge permit and discharging the water.

A project-specific Spill Containment, Cleanup Plan, which should be prepared and included in the WPCP. This WPCP also needs to address Drilling Slurries and Fluids per Standard Specifications section 13-4.03D(5) Liquid Waste.

5 ATTACHMENTS

ATTACHMENT A

LOCATION MAP

Dist	COUNTY	ROUTE	POST MILES TOTAL PROJECT	SHEET No.	TOTAL SHEETS
04	SF	101	3.4	1	27

STATE OF CALIFORNIA

DEPARTMENT OF TRANSPORTATION

PROJECT PLANS FOR CONSTRUCTION ON

STATE HIGHWAY

IN THE COUNTY AND CITY OF SAN FRANCISCO AT 23RD STREET OVERCROSSING

TO BE SUPPLEMENTED BY STANDARD PLANS 2010

INDEX OF PLANS

SHEET No.	DESCRIPTION
1	TITLE SHEET AND LOCATION MAP
2	TYPICAL CROSS SECTIONS
3	LAYOUT
4	TEMPORARY WATER POLLUTION CONTROL PLAN, AND QUANTITY
5	DRAINAGE PLAN
6	UTILITY PLAN
7	CONSTRUCTION AREA SIGNS
8 - 9	TRAFFIC HANDLING PLANS AND QUANTITIES
10	SUMMARY OF QUANTITIES
11 - 12	EROSION CONTROL LEGEND, PLAN, AND QUANTITIES
13 - 17	REVISED STANDARD PLANS
	STRUCTURE PLANS
18 - 27	RETAINING WALL AT 23RD STREET OC

THE STANDARD PLANS LIST APPLICABLE TO THIS CONTRACT IS INCLUDED IN THE NOTICE TO BIDDERS AND SPECIAL PROVISIONS BOOK.

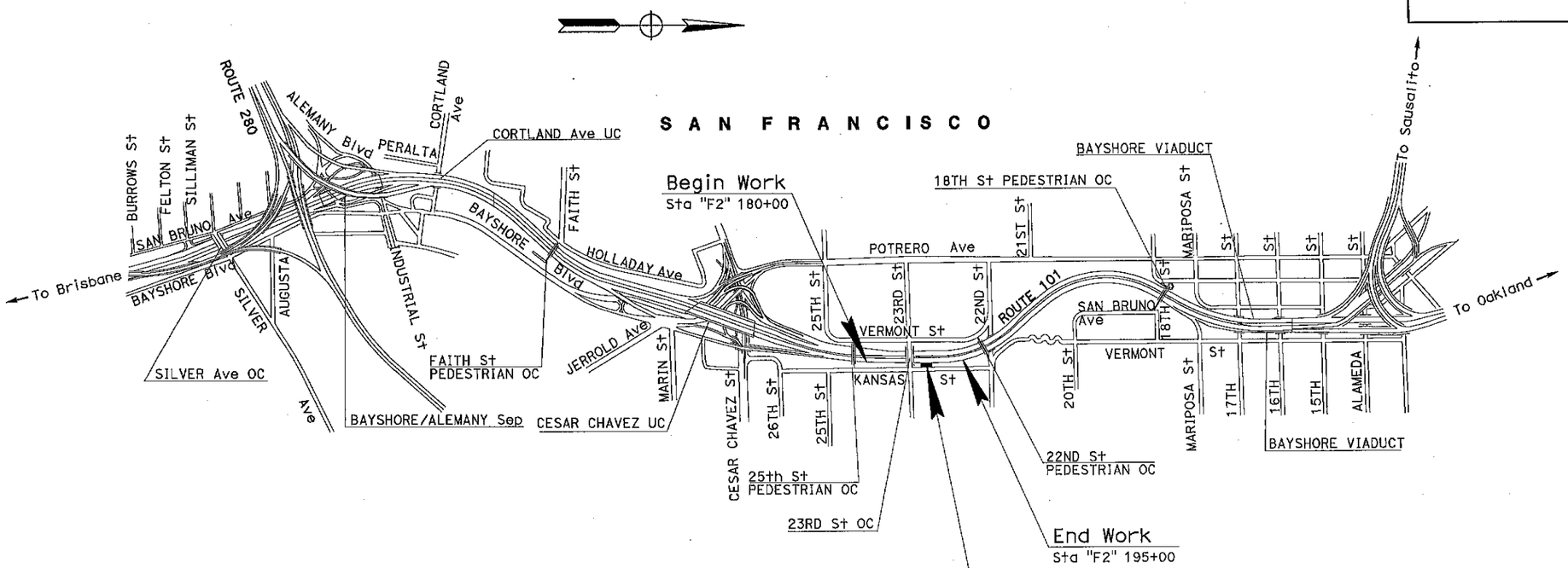

NO SCALE

PROJECT ENGINEER DATE
REGISTERED CIVIL ENGINEER

PLANS APPROVAL DATE

THE STATE OF CALIFORNIA OR ITS OFFICERS OR AGENTS SHALL NOT BE RESPONSIBLE FOR THE ACCURACY OR COMPLETENESS OF SCANNED COPIES OF THIS PLAN SHEET.

REGISTERED PROFESSIONAL ENGINEER No. Exp. CIVIL STATE OF CALIFORNIA

CONTRACT No.	04-3G1704
PROJECT ID	0412000014

LAST REVISION 01-06-15 | DATE PLOTTED => 07-JAN-2015 TIME PLOTTED => 12:38

PROJECT MANAGER JOON KANG

DESIGN MANAGER ARLISSA PANG

THE CONTRACTOR SHALL POSSESS THE CLASS (OR CLASSES) OF LICENSE AS SPECIFIED IN THE "NOTICE TO BIDDERS."

ATTACHMENT B

ESTIMATED SEEPAGE RATE IN PROJECT AREA

State of California
DEPARTMENT OF TRANSPORTATION

California State Transportation Agency

Memorandum

Flex your power!
Be energy efficient!

To: MS. ARLISSA PANG
District Branch Chief
Design South- Special Projects

Date: April 3, 2014

Attention: A. Nguyen

File: 04- SF- 101 PM 3.4
04-3G1701
E-FIS # 0412000014
23rd Avenue Overcrossing
Soldier Pile Retaining Wall
(Seepage Rate)

From: RIFAAT NASHED RN
Engineering Geologist
Office of Geotechnical Design – West
Geotechnical Services
Division of Engineering Services

CHRIS RISDEN
Chief, Branch B
Office of Geotechnical Design – West
Geotechnical Services
Division of Engineering Services

Subject : SEEPAGE RATE (FLOW RATE) ESTIMATE AT 23RD AVENUE OVERCROSSING LOCATION

This memo is in response to your request to provide the groundwater depth and seepage rate for the construction of a soldier pile retaining wall on Route 101 at 23rd Avenue Overcrossing in the City and County of San Francisco. It is our understanding that this information will be used in estimating construction dewatering quantities.

It should be noted that our estimate is based on the following:

1- The groundwater depth was measured by the Geotechnical Engineer David Nesbitt in March 2014. The groundwater elevation was 69.5 feet (at depth 7.5 feet below the ground surface).

2- The ground surface elevation ranges between 73.55 feet (at Sta. 10+00) and 77.22 feet (at Sta. 10+80), but we considered the ground surface elevation in all our calculation as 73.55 feet (as a worst case scenario).

3- The embedded length of the 14 CIDH piles will be 20 feet- in average - below the ground surface. The pile diameter will be 30 inch (2.5 ft).

Based on the LOTB of boring RW-13-001 drilled in August 2013 (at the north eastern side of the wall), the soils at and below the groundwater level and extending to the pile tips are poorly graded gravel (GP), well graded gravel (GW), gravelly clay (CL) and very intensely fractured serpentinite as a bedrock .

By using the Coefficient of Permeability, K value 13.7 ft/day for poorly graded gravel, 2.7 ft/day for well graded gravel, $2.7x10^{-3}$ ft /day for gravelly clay, and 0.283 ft /day for Serpentine [1] (as Jointed rock), the seepage rate for this location is 6.7 gallon/day/ft^2.

According to "The Federal Highway Report NO. FHWA-TS-80-224, Page 48-49" the Coefficient of Permeability K (ft./day) for the soils encountered are as follows:

Unified Soil Classification	Coefficient of Permeability K (ft./day)
Poorly graded gravel (GP)	13.7 to 27,400
Well graded gravel (GW)	2.7 to 274
Gravelly clay (CL)	$2.7x10^{-5}$ to $2.7x10^{-3}$

Our estimate of the seepage rate (flow rate) for the project area in general is approximately 6.7 gallons /day/ ft^2. This seepage rate (flow rate) estimate is provided for cost estimate purposes only.

If you have any questions or need additional information, please call Rifaat Nashed at (510) 622-1773 or Chris Risden, Branch Chief at (510) 622-8757.

c: TPokrywka, CRisden, Daily File

RNashed/mm

[1] Roy E. Hunt, 2005, Geotechnical Engineering Investigation Handbook, 2nd Edition- Page 167 table 3.12

23 rd Avenue Overcrossing Solder Pile Retaining Wall - Seepage Rate

Soil/Rock	Bed thickness (ft)	Perimeter (ft)	No of Piles	A (ft^2)	K (ft/day)	H (ft)	H_0 (ft)	dH (ft)	d S (ft)	i	q	q total (ft^3/day)	q total (Gallon/day)	q total (Gallon/day/ft^2)
Poorly Graded Gravel (GP)	3.5	7.85	14	27.475	13.7	69.5	53.50	16.00	60.8	0.26316	99.05461			
Well Graded Gravel (GW)	2.5	7.85	14	19.625	2.7	69.5	53.50	16.00	60.8	0.26316	13.94408			
Gravelly Clay (CL)	3.5	7.85	14	27.475	0.0027	69.5	53.50	16.00	60.8	0.26316	0.019522			
Sepentinite	6.5	7.85	14	55.93125	0.283	69.5	53.50	16.00	60.8	0.26316	4.165406			
				130.5063								117.1836122	874.5045684	6.70086351

q = KiA

Notes

Length = bed thickness
Perimeter = is the circumference of the pile (hole) = 2 Pl r
A = The cylender surface area = 2 Pl r x Length
k = Soil permeability (from Hwy Subdrainage Design Report No. FHWA - TS-80-224- Page 48-49)
H = ground water elevation
H0 = the pile tip (bottom of the hole) elevation
dH = water head
ds = gradient distance Li = 3.8x(H - H0).....Ref. FHWA-Ts-80-224 Page 66
"i" = dH/ds
q total = (gallon/day/ft2) = q total (gallon/day)/ total surface area

ATTACHMENT C

LIST OF PUBLICLY OWNED TREATMENT WORK (POT) FACILITY

City Discharger	Treatment Plant Name	WDR Discharger Name	Discharger Contact Name	Contact Phone No.	Contact Email	Mail Address	Ct Contact for Groundwater & De-Watering Discharges	Service Area of the POTW
Treasure Island WPCP	Treasure Island WPCP	SF PUC	Nathan Brennan	(415)242-2256 X1358	mcarlin@sfwater.org nbrennan@sfwater.org	Michael Carlin, SFPUC, Planning Bureau Manager, 1141 Market St., Suite 401, San Francisco, CA 94103, 415-934-5787	Best contact is Vic Vista @ 415-274-0318 at the "very small" plant on TI. Would want Chloride levels checked - and other sampling, and permit required.	Yerba Buena Island and Treasure Island

ATTACHMENT D

POTW SERVICE AREA MAP

San Francisco County - POTW Service Areas

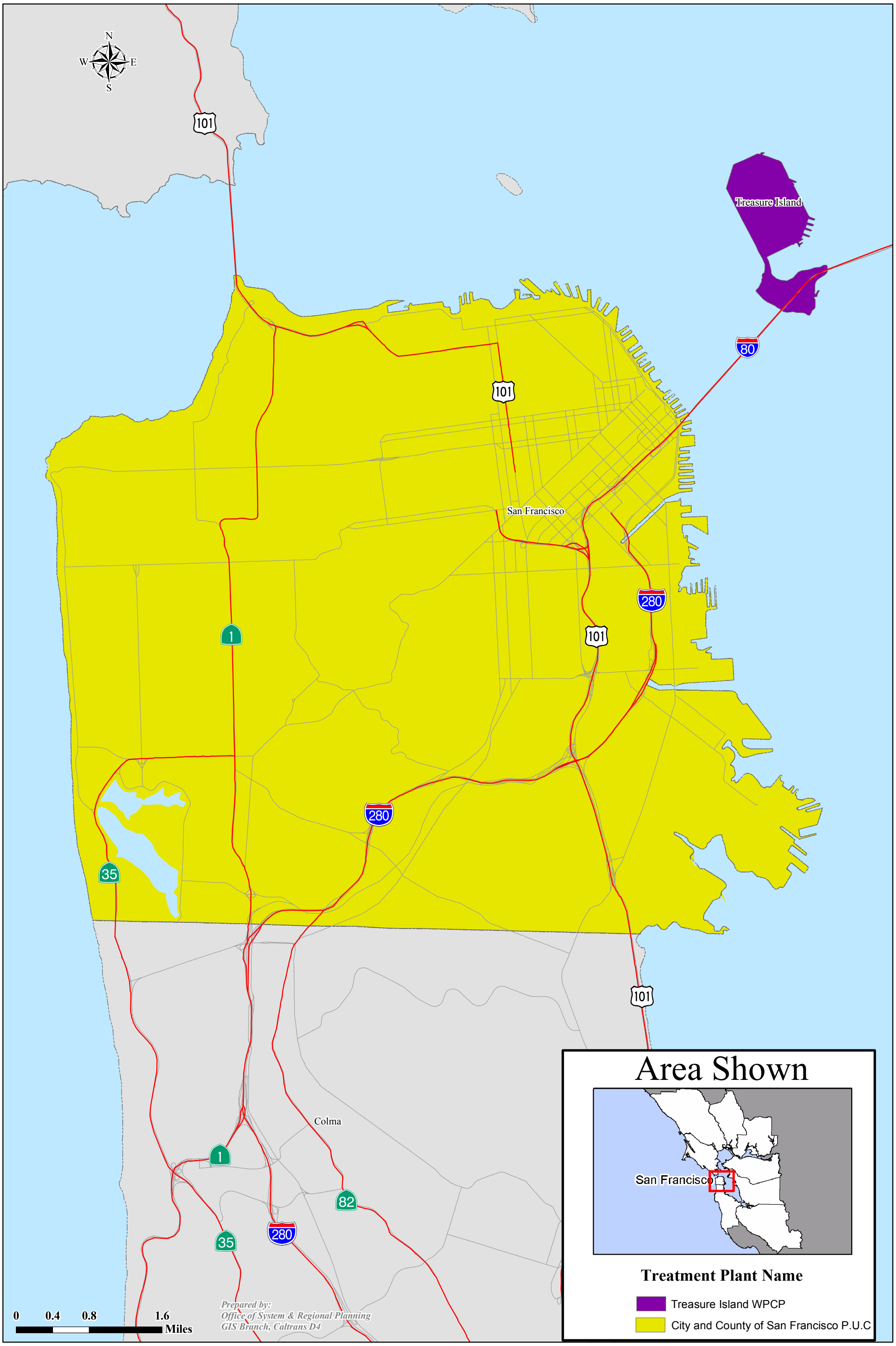

ATTACHMENT E

PROJECT DISCHARGE LOCATION PLAN

Dist	COUNTY	ROUTE	POST MILES TOTAL PROJECT	SHEET No.	TOTAL SHEETS
04	SF	101	3.4	5	27

REGISTERED CIVIL ENGINEER DATE

PLANS APPROVAL DATE

REGISTERED PROFESSIONAL ENGINEER No. Exp. CIVIL STATE OF CALIFORNIA

THE STATE OF CALIFORNIA OR ITS OFFICERS OR AGENTS SHALL NOT BE RESPONSIBLE FOR THE ACCURACY OR COMPLETENESS OF SCANNED COPIES OF THIS PLAN SHEET.

NOTE:

FOR ACCURATE RIGHT OF WAY DATA, CONTACT RIGHT OF WAY ENGINEERING AT THE DISTRICT OFFICE.

DRAINAGE QUANTITIES

DRAINAGE SYSTEM No. ⬡	DRAINAGE UNIT ○	MINOR CONCRETE (GUTTER) LF	6" PLASTIC PIPE LF	INLET GRATE EA	DESCRIPTION	STATION
1	a	117			MINOR CONCRETE (GUTTER)	"W1" 10+00 TO 11+10
	b		9		6" PLASTIC PIPE	"W1" 10+04.5
	c			1	INLET GRATE	"W1" 10+04.5
TOTAL		117	9	1		

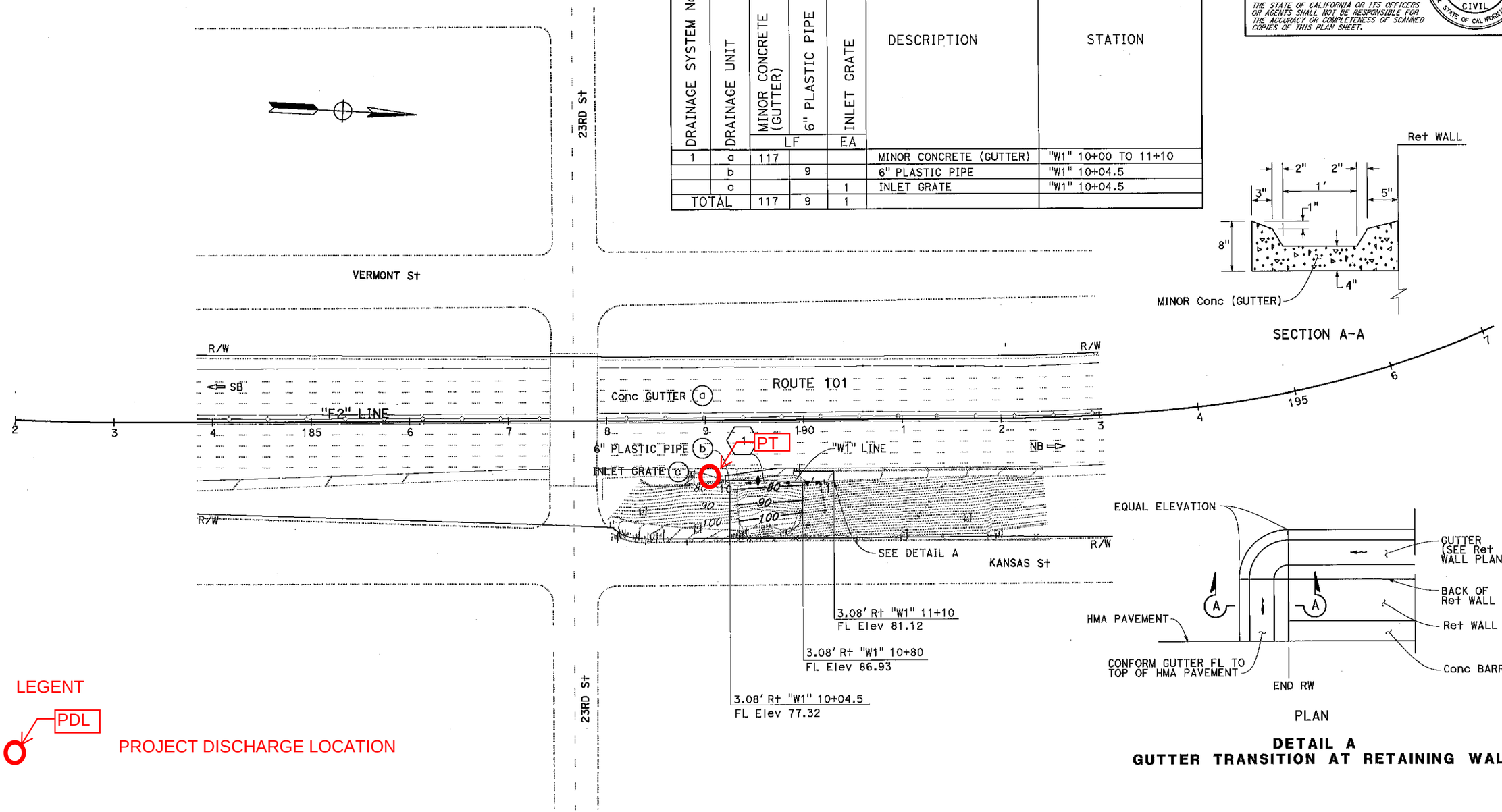

DETAIL A
GUTTER TRANSITION AT RETAINING WALL

PROJECT DISCHARGE LOCATION PLAN

SCALE: 1" = 50'

APPROVED FOR DRAINAGE WORK ONLY

D-1

	NP	10/14/14	
REVISED BY	DATE REVISED		
AN NGUYEN	ARLISSA PANG		
CALCULATED-DESIGNED BY	CHECKED BY		
FUNCTIONAL SUPERVISOR	LAWRENCE A. JONES		

STATE OF CALIFORNIA - DEPARTMENT OF TRANSPORTATION
Caltrans
DESIGN

LAST REVISION 01-06-15
DATE PLOTTED => 08-JAN-2015
TIME PLOTTED => 13:33

ATTACHMENT F

DEWATERING LOCATION PLAN

District	COUNTY	ROUTE	POST MILES TOTAL PROJECT	SHEET No.	TOTAL SHEETS
04	SF	101	3.4	3	27

REGISTERED CIVIL ENGINEER DATE

PLANS APPROVAL DATE

REGISTERED PROFESSIONAL ENGINEER No. Exp. CIVIL STATE OF CALIFORNIA

THE STATE OF CALIFORNIA OR ITS OFFICERS OR AGENTS SHALL NOT BE RESPONSIBLE FOR THE ACCURACY OR COMPLETENESS OF SCANNED COPIES OF THIS PLAN SHEET.

NOTE:

FOR ACCURATE RIGHT OF WAY DATA, CONTACT RIGHT OF WAY ENGINEERING AT THE DISTRICT OFFICE.

"COORDINATE VALUES SHOWN ARE CCS 27 ZONE 3 ".

LEGEND:

STRUCTURAL SECTION NUMBER

(No.) CURVE DATA NUMBER

CURVE DATA

No. ⑤	R	Δ	T	L	N-COORDINATE	E-COORDINATE
1	2500′	2° 53′ 58"	63.27′	126.51′	461794.82	1447696.23
2	2000′	5° 41′ 51"	99.52′	198.88′	462692.30	1448147.77
3	1000′	18° 4′ 20"	159.03′	315.42′	462845.91	1449135.90

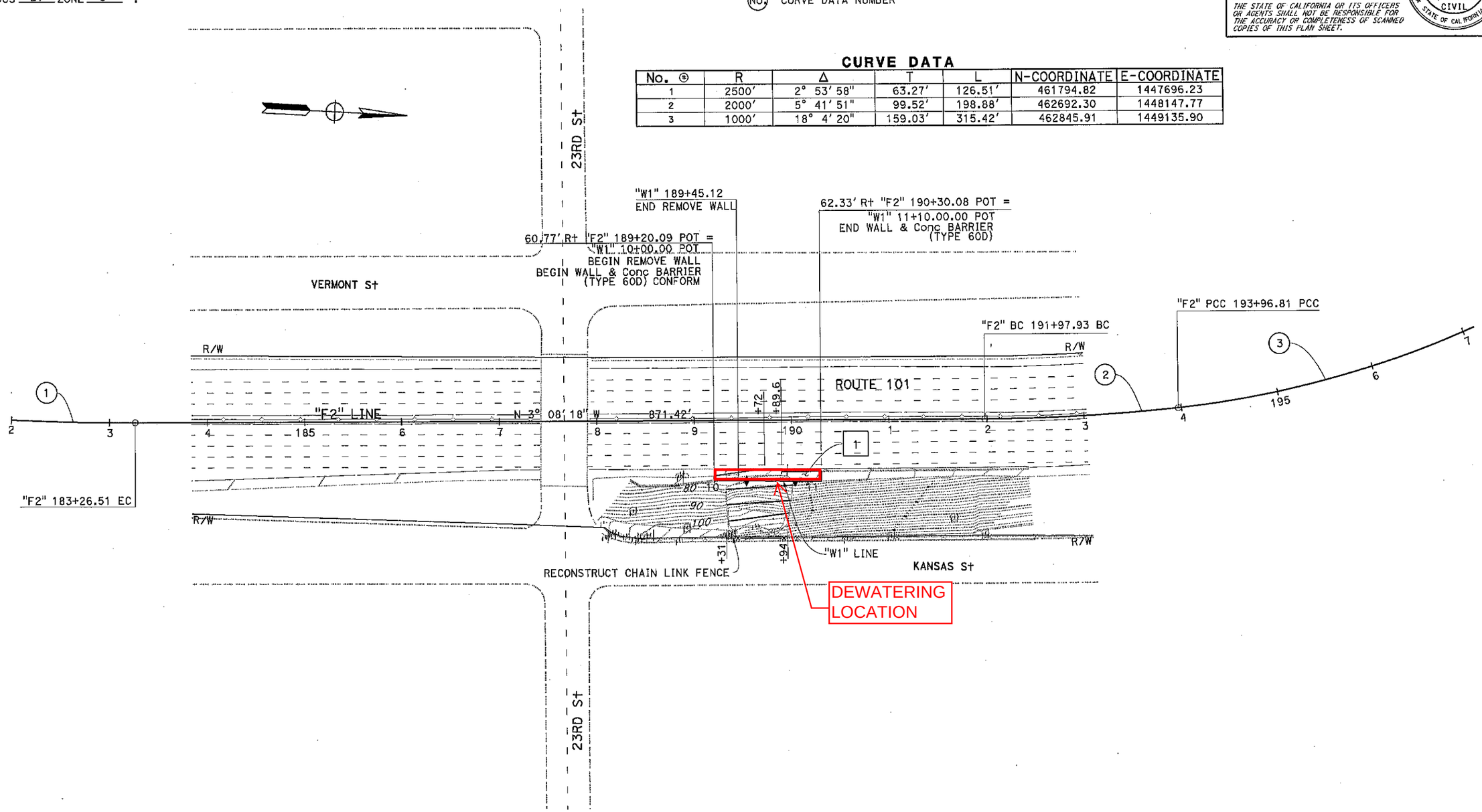

DEWATERING LOCATION PLAN

SCALE: 1" = 50′

L-1

STATE OF CALIFORNIA - DEPARTMENT OF TRANSPORTATION

Caltrans® DESIGN

FUNCTIONAL SUPERVISOR: LAWRENCE A. JONES

CALCULATED-DESIGNED BY: AN NGUYEN

CHECKED BY: ARLISSA PANG

REVISED BY: NP

DATE REVISED: 10/14/14

LAST REVISION 01-06-15

DATE PLOTTED => 07-JAN-2015

TIME PLOTTED => 12:42

BORDER LAST REVISED 7/2/2010

USERNAME => s129398

RELATIVE BORDER SCALE IS IN INCHES 0 1 2 3

UNIT 0720

PROJECT NUMBER & PHASE 04120000141

State of California
DEPARTMENT OF TRANSPORTATION

California State Transportation Agency

Memorandum

Serious drought
Help Save Water!

To: MR. MUTHANNA OMRAN
Bridge Design Branch Chief
Office of Structures Design – West

Date: December 19, 2014

Attention: Alireza Yazdani

File: 04-SF-101 PM 3.4
04-3G1700
Efis# 0412000014-0
23rd Street OC at Kansas St.

From: EDUARDO ORTEGA/DAVID NESBITT
Assoc M & R Engineer/Transportation Engineer
Office of Geotechnical Design – West
Geotechnical Services
Division of Engineering Services

MAHMOOD MOMENZADEH
Chief, Branch C
Office of Geotechnical Design – West
Geotechnical Services
Division of Engineering Services

RIFAAT NASHED
Engineering Geologist
Office of Geotechnical Design – West
Geotechnical Services
Division of Engineering Services

CHRIS RISDEN
Chief, Branch B
Office of Geotechnical Design – West
Geotechnical Services
Division of Engineering Services

Subject: FOUNDATION REPORT

I. INTRODUCTION

This Foundation Report (FR) supersedes our FR, dated December 11, 2014 and presents our recommendations to repair a storm damaged slope located on the northbound shoulder of Route 101 near the 23rd Street Overcrossing in the City of San Francisco, San Francisco County. The damaged slope is located below Kansas Street.

The scope of this investigation was limited to the geotechnical aspects of the project and did not include evaluation of the contaminants and hazardous material at the site. Please consult with the District 4 Office of Environmental Engineering for their related evaluations and limits.

II. BACKGROUND

The slope is damaged by a slipout which in according to Caltrans Maintenance was the result of a broken water line on Kansas Street, which was being relocated by the City of San Francisco. The broken water line was located across the street from 1163 Kansas Street. The slipout extended from the broken water on Kansas Street to the northbound shoulder of Route 101. The slipout is approximately 40 feet wide at the top, and 65 feet wide at the bottom. The length of

the slipout is approximately 65 feet. The head scarp is approximately 8 feet in height, and the slope at the site is approximately 2(H) to 1(V).

The Caltrans As-Built indicates that there was a slipout adjacent to the current slipout during the original construction of Route 101 in 1952. The repair for the older slipout included an upper and lower set of horizontal drains that were connected to a pipe that carried the water to the storm drains. The collection pipes for the horizontal drains run through the current slipout repair location. These pipes were probably damaged by the slipout, and will need to be replaced after the slipout repair is completed. The Caltrans irrigation system at the slipout location has been damaged, and will need to be replaced.

The City of San Francisco has repaired Kansas Street at the location of the broken water line. The repair included backfill the upper part of the slipout just beyond the Right-Of-Way line. The detail of that repair is not known.

III. PHYSICAL SETTINGS

Climate

The site is located on the northern tip of the San Francisco Peninsula. The site climate is considered Mediterranean, which is warm during summer when temperatures tend to be in the low 60's and cool during winter when temperatures tend to be in the 50's. San Francisco's warmest months are September with an average maximum temperature of 63.7° Fahrenheit, while the coldest month of the year is January with an average minimum temperature of 52.3° Fahrenheit. The annual average precipitation is 22.28 inches. Winter months tend to be wetter than summer months. The wettest month of the year is January with rainfall of 4.72 inches, and the driest month is in July, and is usually below 0.10 inches. (Data taken from http://www.idcide.com/weather/ca/san-francisco.htm).

Topography & Drainage

The project site is located on the eastern portion of the San Francisco Peninsula, in the neighborhood known as the Inner Mission, across Highway 101 from San Francisco General Hospital. The freeway is constructed in a cut section approximately 30 feet below Kansas Street, which sits at an elevation of approximately 100 feet msl. Kansas Street has a curb that forces the water to drain to the south into San Francisco's storm water and sewer system. Approximately, 3,660 feet to the southeast is Islais Creek Channel which drains east to the San Francisco Bay.

Prior Land Use

The project site is located within the City and County of San Francisco, a major urban area. Highway 101 cuts through the city the eastern portion of the Inner Mission neighborhood, which before the freeway was constructed a mix of residential and commercial buildings.

Man Made Features

The site is within the City and County of San Francisco. To the east of the site is Potrero Hill neighborhood with the nearest house being directly across Kansas Street. West of the highway is San Francisco General Hospital. Directly adjacent to the south of the slide, there is a retaining wall for a pull out, and beyond that is the 23rd Street Overcrossing.

IV. GEOLOGY

Regional Geology

The project site is located within the California Coast Ranges geomorphic province. Extensive folding has created a series of northwest trending ranges and valleys. One of which is the San Francisco Bay. San Francisco Bay drains 40% of California via the Sacramento and the San Joaquin Rivers through the Golden Gate to the Pacific Ocean. Of the faults, the San Andres is the controlling fault throughout California. It was formed when the Farallon Plate was subducted below the North American Plate. Once the plate was subducted, the San Andreas Fault was the new contact and was between the Pacific Plate and the North American Plate. This fault is a right lateral strike slip fault and created new stress on the plates and formed a series of semi-parallel faults: i.e. the Hayward, San Gregorio, and Silver Creek faults.

Site Geology

San Francisco is mostly covered by Quaternary deposits with outcrops of the Franciscan Complex dotted across the city. This project lies within the Fort Point-Potrero Hill-Hunters Point Shear Zone (Figure 2). Within this zone the project is located on sandstone. This sandstone is described as thick-bedded and massive greywacke, interbedded with thin layers of shale and finer sandstone. Also, locally there are some thick conglomerate lenses.[1] Geology map indicates the sites sits near the sandstone/serpentine contact that explains the info in the next paragraph (Geology is presented on Figure 3).

During a 1952 slide investigation borings and trenches were used to investigate the subsurface. The results of the methods showed the site had silty clay, clay, silty sand and sandy silt. Along with these, there were serpentine, sandstone and schist, all of which varied from freshly

[1] USGS, Geologic Map of the San Francisco North Quadrangle, San Francisco and Marin Counties, CA, 1958.

weathered to decompose. A more recent investigation took place in 1994 just south of 23rd Street for a soundwall installation project. The borings showed sandy clay, clayey sand and silty sand overlying slightly to moderately weathered serpentine. Attached are the 1952 Slide Investigation Plans and 1994 LOTBs.

Soils

The soil that is located at the project site is *urban land* and *urban land-Orthents.* (The USDA, NRCS; Custom Soil Resource Report for Alameda County, California; 2012 can be supplied upon request.)

Faulting and Seismicity

The project site is located within a seismically active region dominated by the northwest trending San Andreas Fault. Several other faults that parallel the San Andreas make up the larger San Andreas Fault system and separate the Pacific Plate on the west from the North American Plate to the east. The San Andreas Fault system can be thought of as a diffuse plate boundary at which strain is spread across a wide region. There are large, well-known faults within the system that tend to be the most active; however, there are other unnamed faults that are not mapped that may produce moderate earthquakes.

There are numerous active faults within the San Francisco Bay Area that have the potential to produce large earthquakes, such as: the San Andreas (Peninsula), San Andreas (North Coast) and San Gregorio Fault (San Gregorio Section)[2] (Regional Fault Map Figure 4). The closest of these faults is the San Andreas (Peninsula) Fault, which is approximately 7.3 miles from the project site. The San Andreas Fault is a right-lateral strike-slip fault that dips 90 degrees relative to horizontal. Based on the Caltrans ARS Online Application, this fault is the controlling fault for this project. Table 1 presents the seismic data for the closest faults to the project. Data is from Caltrans 2007 Seismic Hazard Report. Maximum Credible Earthquakes are given in Mw (moment magnitude) and are a function of the length and width of a fault zone and not of recent or historical events.

[2] Caltrans ARS Online (v2.2.06)

Table 1: Seismic Data

FAULT	Fault No.	Distance (Miles)	Fault Type	Maximum Credible Earthquake	Peak Ground Acceleration (Shear wave velocity of 270 m/s)
San Andreas (Peninsula)	134	7.3	Right Lateral Strike Slip	8.0	0.32g
San Andreas (North Coast)	80	11.5	Right Lateral Strike Slip	8.0	0.26g
San Gregorio fault (San Gregorio section)	127	11.0	Right Lateral Strike Slip	7.4	0.22g
Probabilistic Model USGS Seismic Hazard Map(2008) 975 Year Return Period, calculated at 270m/s					0.63g

V. POTENTIAL SITE HAZARDS

Seismic Hazards

Potential seismic hazards in such an active region include primary surface rupture, seismic fault creep, and the secondary effects due to strong ground shaking. The following describes the hazards that may be encountered during either surface rupture or ground shaking and possible mitigation procedures to use during design and/or construction.

Primary Seismic Hazards

Surface rupture and fault creep:

There are no active faults that cross the project limits, therefore, fault rupture and fault creep are not considered to pose hazard to the project.

Secondary Seismic Hazards

Ground shaking:

The potential for strong ground shaking in the project area during the life of the project is high and will affect both roadways and structures. Loose, saturated soils pose the greatest threat during episodes of strong shaking. The following lists possible hazards that may be caused by strong ground shaking and the probability of their occurrence within the project limits.

Liquefaction:

Liquefaction potential, a phenomenon in which soils lose all shear strength and turn essentially to fluids, is considered very high in the project area. Potentially liquefiable deposits are generally composed of clean sand with a high ratio of void space. Subsurface sampling indicated clays and highly weathered serpentine rock. The subsurface conditions suggest a very low potential for liquefaction. Liquefaction Susceptibility is presented on Figure 5.

Flooding:

According to the Association of Bay Area Governments website, the flood status is classified as urban area. Also, because of the topography, flooding is not considered a hazard. However, slope wash out and slip out are anticipated in the event of the water and/or sewer lines rupture.

Landslides:

The project site is located at an active landslide that has been under investigation starting in 1952. The proposed retaining wall is aimed to mitigate the slide as well.

Hazardous Waste Potential

To our knowledge there is no hazardous waste in the project limits.

VI. FIELD INVESTIGATION

A total of 1 vertical borehole RW-13-001 was drilled in the project area utilizing the rotatory wash drilling method. Boring RW-13-001 was drilled along Route 101 54.9 feet right of station 190+02 to the depth of 40 ft (elevation 37.0 ft). A stand pipe piezometer was installed at this location to measure groundwater.

VI-1 Subsurface Condition

The foundation material encountered at borehole RW-13-001 below the Asphalt Concrete, from depth 1.0 to 10 ft consists of Poorly GRAVEL (GP), very loose, greenish gray, moist, coarse, angular GRAVEL. From 10 ft to 13.5 ft the soil material in the borehole consisted of well-graded GRAVEL (GW), very dense, dark gray, moist, coarse, angular GRAVEL From 13.5 ft to 17 ft gravelly lean CLAY (CL), very stiff, olive gray, some coarse gravel was encountered. From 17 ft to the bottom of the borehole at 40 ft depth consist of METAMORPHIC ROCK (SERPENTINE), greenish gray, intensely weathered, moderately soft, very intensely fractured was encountered. The rock varied with depth from greenish gray to greenish black to black , slickensided/sheared, moderately weathered, and moderately hard to hard.

VI-2 Groundwater

The groundwater depth was measured in March 2014. The groundwater elevation was 69.5 feet (at depth 7.5 feet below the ground surface). The actual groundwater at the site will fluctuate and could be higher. In addition some slope seepage and surface runoff may be anticipated if construction carried out during rainy season.

VII. FOUNDATION RECOMMENDATIONS

Based on the site topography and geologic conditions, it is our opinion that the most suitable repair system at this site consists of constructing a soldier pile wall with slide debris removed and replaced with compact structure backfill, as described below:

VII-1 RETAINING WALL TYPE

Soldier pile wall is the most suitable wall type for this project site conditions and it was confirmed by type selection meeting. The soldier pile retaining wall shall be designed to a maximum height of approximately 14 ft in height to develop a backfill slope no steeper than 1.75H:1V. In accordance with the latest plans and information received from Structure Design the wall begins near the end of the existing wall(LOL Station 10+00 and ends at LOL Station 11+10. approximately 110 ft long along the bottom of the slope below Kansas Street.

VII-2 Foundation Parameters

The global and local stability requirements of the wall are satisfied with combination of the soldier beam pile wall and excavating the slide debris and replacing it with the wall backfill as recommended below. The design of the soldier beams shall limit the lateral deflection of the piles to maximum 2 inches to prevent impact on the utilities on the Kansas Street. A small length of the existing wall will be demolished and replaced with the proposed wall.

The soldier piles and soil nominal parameters for the strength limits are given below:

Table 2: Soldier Piles Wall

Wall	Wall Height Ft *	Pile spacing Ft	Pile diameter ft	Pile minimum embedment Ft
Wall	7 to14	5 to 6	2	20

**Includes 2 ft below finished grade according to Caltrans August 2004 Bridge Design Specifications (BDS) Art 5.8.6.1*

TABLE 3 Pile Friction and Tip Compression Capacities for Wall

	Ultimate Kips/sqft	Allowable Kips/sqft
Unit pile shaft friction per unit surface area of the pile length below the dredge line of the wall	2.50	1.25 (SF=2)
Pile tip compression bearing pressure per unit tip area of the pile	73.55	24.50 (SF=3)

Use 60% of the compression shaft resistance values to calculate the ultimate tension (uplift) resistance of the pile.

For <u>active earth pressure</u> against the wall/piles, for sloping backfill β=29.7°use the following:

- For the lateral earth pressure acting on the wall height H, use the simplified lateral earth pressure distribution shown on Bridge Design Specifications dated August 2004 (BDS) Article 5.5.5.6, Figure 5.5.5.6-1 (See attachment) . The backfill slope angle (beta) is 29.7 degrees (1.75:1V)

Table 4. Soil/Rock Parameters

Soil $\gamma_{1 = 125\ lb/ft^2}$	$\varphi_{1 = 30^\circ}$	$c_{1 = 0}$
Rock $\gamma_{2 = 125\ lb/ft^2}$	$\varphi_{2 = 34^\circ}$	$c_{2 = 0}$

- Use active coefficient (Ka) of 0.40.

For passive earth pressure against the soldier piles, use the following:

- Use passive earth coefficient (Kp) of 3.5 This Kp was computed using engineering properties of Franciscan Melange (internal friction angle ϕ =34°, cohesion c = 0 psf, and total unit weight of rock γ = 135 pcf)

For Friction Factor use δ = 17°

Since structure fill combined with use of geocomposite and weep hole are provided in design, no hydraulic pressure was considered in the wall design.

Use a triangular seismic earth pressure increment with the maximum pressure of 34 H (psf) at the base of the wall.

VII-3 BACKFILL

We recommend that the slope slide material in the subject area be removed and replaced with structure fill as outlined below. The excavation of the slide material and fill replacement shall conform with related sections of Chapter 19 of Caltrans 2010 Standard Specifications.

Remove the slide debris and loose soil and rock material within the defined repair limits, and excavate at least 1 foot into competent material (excluding the scarp). The longitudinal limits of the slide debris removal are the same as those defined for the wall limits. The required depth of the slide debris removal varies. Use an average of 2.5 ft slide debris removal over the entire area of the slope for the material estimating purpose. Please note that the slide debris removal must not extend below the bottom of the wall and not encroach in the roadway on the top of the slope.

The cut slope must conform with Cal-Osha requirements and shall be no steeper than 1V:1.5 H in loose soil and 1V:1H in compact soils and moderately competent rock and it shall be cut in a multiple benches as described in Section 19-6.03 of the 2010 Standard Specification to facilitate the interlocking of the backfill with the existing cut slope surface. The vertical unsupported cut at each bench shall not be higher than 4 ft. The top of the cut shall be kept at an offset of at least 5 ft from the adjacent Kansas Street and the existing utilities located below or above the roadway. If the above recommended cut slope and the offset from the adjacent facilities cannot be met, temporary shoring with appropriate height are required to maintain the existing road and the utilities, which shall be responsibility of the contractor. Construction shall contact our office to oversight the excavation of the slide debris and preparing the slope receiving the backfill, if needed. We will also provide the review of the contractor shoring design.

Backfill shall be "Structure Backfill material" according to Sections 19-3.02B and 19-3.03E of the Caltrans 2010 Standard Specifications.

VIII. CORROSION

Corrosion is not of the concern for this project due to the type of rock present at this site and that all existing slide material will be removed and replaced with structural fill.

IX. CONSTRUCTION CONSIDERATIONS AND REQUIREMENTS

The following construction considerations and requirements should be included in the design and construction specifications for the proposed Soldier Pile Wall:

- A rock fence is required along the toe of the slope if the removal of the slide debris, loose soils, and soft rock is performed before the construction of the wall.

- Backfill placement and compaction shall be progressed starting from the wall toward the top of the slope at Kansas Street level.

- During drilling operation for the proposed Soldier beam holes, some caving of the drilled holes will likely occur. Thus, use of casing combined with dewatering is required.

- Cut slope shall conform to Cal-Osha requirements. Refer to Section VII-3 above for the site-specific cut slope, backfill recommendations and temporary shoring needs

- Drilling for piles shall conform to Section 49-4.03 of 2010 Standard Specifications. Both caving loose soils in the upper part of drilling and hard rock below are anticipated at the drill hole locations which need use of temporary casing and special drilling equipment capable in drilling in hard rock.

- Monitoring point using survey hubs or points of at least 1.5 ft deep shall be installed along the Kansas Street at about spacing of 20 ft to monitor the road movements during the slope excavation and wall construction. The monitoring shall be conducted at least weekly and possibly shorter during the excavation period. Any significant road or adjacent facilities movement shall be reported immediately to our office for evaluation and developing mitigation, if needed. Construction shall be stopped if significant road movement in any direction of 2 inches is observed.

- Groundwater that infiltrates the drill hole shall be removed before placing concrete therein. Fluvial or drainage water shall not be permitted to enter the hole.
- The rain runoff shall be diverted from the slope area during the construction if carried out during rainy season.

- Installation of the soldier pile should be performed in accordance with Section 49-4 of the 2010 Caltrans Standard Specifications.

* * * * *

Should you have any questions, please call me at (510) 286-4821.

Attachments:

c: TPokrywka, MMomenzadeh, E☺rtega, DNesbitt, MGaffney, Dwight_Manlulu, Shira_Rajendra, Melanie_Brent, RE_Pending_File@dot.ca.gov, John_Stayton. Tinu_Mishra

Eduardo ☺rtega/mm /FR101 at Kansas-Updated.docx

PROFESSIONAL GEOLOGIST
CHRIS RISDEN
CERTIFIED ENGINEERING GEOLOGIST
No. 2541
Exp. 6/30/15
STATE OF CALIFORNIA

REGISTERED PROFESSIONAL ENGINEER
EDUARDO ORTEGA
No. C041012
Exp. 03-31-15
CIVIL
STATE OF CALIFORNIA

FIGURE 1

INDEX OF PLANS

STATE OF CALIFORNIA
DEPARTMENT OF TRANSPORTATION

PROJECT PLANS FOR CONSTRUCTION ON
STATE HIGHWAY

IN THE CITY AND COUNTY OF SAN FRANCISCO AT 23RD STREET OVERCROSSING

TO BE SUPPLEMENTED BY STANDARD PLANS 2010

Dist	COUNTY	ROUTE	POST MILES TOTAL PROJECT	SHEET No.	TOTAL SHEETS
04	SF	101	3.4		

LOCATION MAP

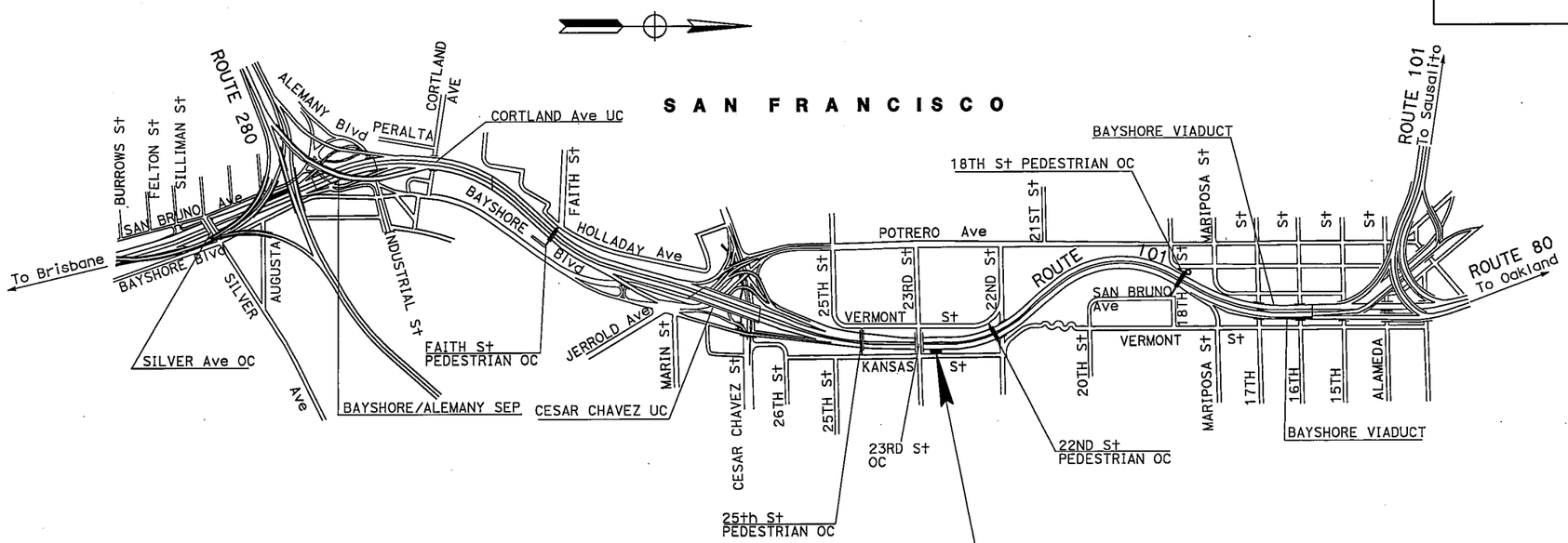

LOCATION OF CONSTRUCTION
PM 3.4

NO SCALE

PROJECT ENGINEER DATE
REGISTERED CIVIL ENGINEER

PLANS APPROVAL DATE

THE STATE OF CALIFORNIA OR ITS OFFICERS OR AGENTS SHALL NOT BE RESPONSIBLE FOR THE ACCURACY OR COMPLETENESS OF SCANNED COPIES OF THIS PLAN SHEET.

REGISTERED PROFESSIONAL ENGINEER No. Exp. CIVIL STATE OF CALIFORNIA

CONTRACT No.	04-3G1704
PROJECT ID	0412000014

PROJECT MANAGER: JOON KANG
DESIGN ENGINEER: AN NGUYEN

LAST REVISION 10-02-12
DATE PLOTTED => 14-JAN-2013
TIME PLOTTED => 15:19

THE CONTRACTOR SHALL POSSESS THE CLASS (OR CLASSES) OF LICENSE AS SPECIFIED IN THE "NOTICE TO BIDDERS."

BORDER LAST REVISED 7/2/2010 | CALTRANS WEB SITE IS: HTTP//WWW.DOT.CA.GOV/ | RELATIVE BORDER SCALE IS IN INCHES 0 1 2 3 | USERNAME => s129398 DGN FILE => Title.dgn | UNIT 0720 | PROJECT NUMBER & PHASE 04120000141

Aerial view showing the approximate location of the slipout and the existing horizontal drains

04-SF-101 PM 3.4 EA: 04-930322

FIGURE 2

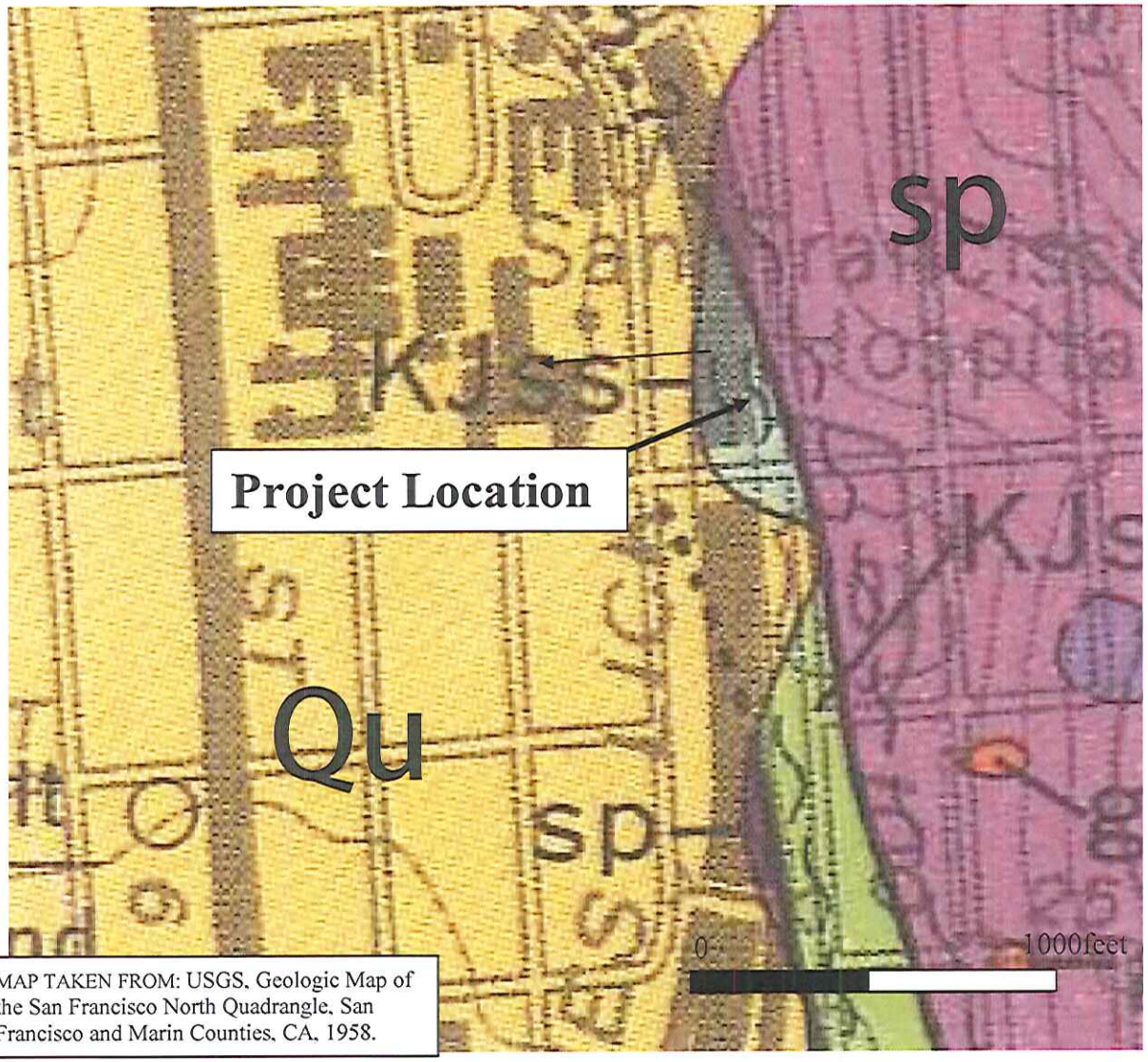

MAP TAKEN FROM: USGS, Geologic Map of the San Francisco North Quadrangle, San Francisco and Marin Counties, CA, 1958.

KEY

Qu	Surficial Deposits Undivided
sph / sp	Serpentine
KJss / KJsh / KJs	KJss Sandstone
gb	Gabbro

Contact

Long dashed where approximately located; short dashed where indefinite; dotted where concealed

60 U D ?

Fault, showing dip and relative movement

Long dashed where approximately located; short dashed where inferred; dotted where concealed. Query indicates greater uncertainty as to existence of fault than does dashed line. U, *upthrown side;* D, *downthrown side*

30

Showing average dip — Approximately horizontal

Shear zone

SCALE Not to Scale	Caltrans	DIVISION OF ENGINEERING SERVICES GEOTECHNICAL SERVICES GEOTECHNICAL DESIGN - WEST – BRANCH B	GEOLOGY MAP 04-SF-101 0412000014 PM 3.4 MAY 2013 FIGURE 3

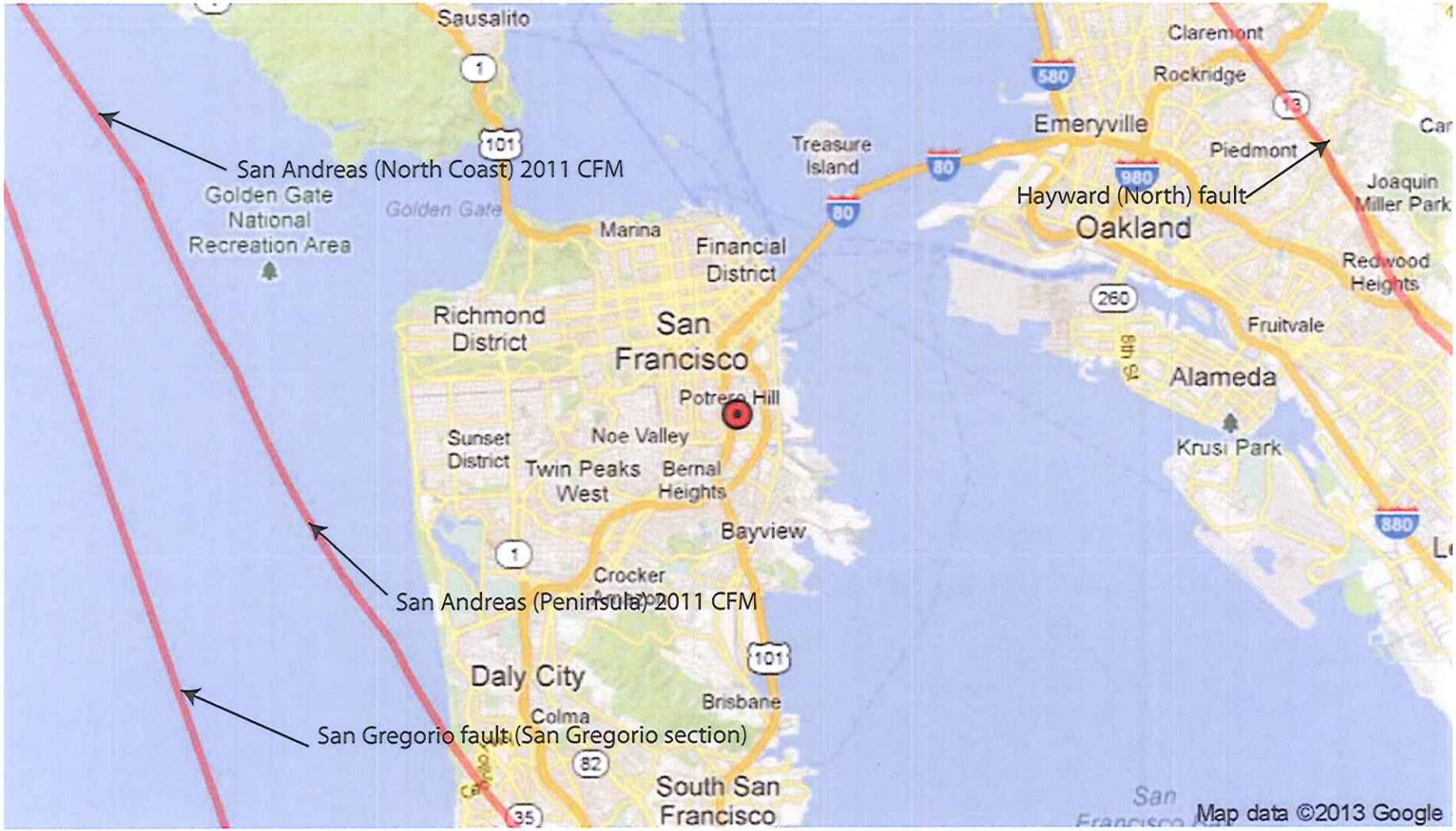

SCALE **Not to Scale**	Caltrans	**DIVISION OF ENGINEERING SERVICES** GEOTECHNICAL SERVICES GEOTECHNICAL DESIGN - WEST – BRANCH B	**FAULT MAP** **04-SF-101** **0412000014** **PM. 3.4** **May2013** **FIGURE 4**

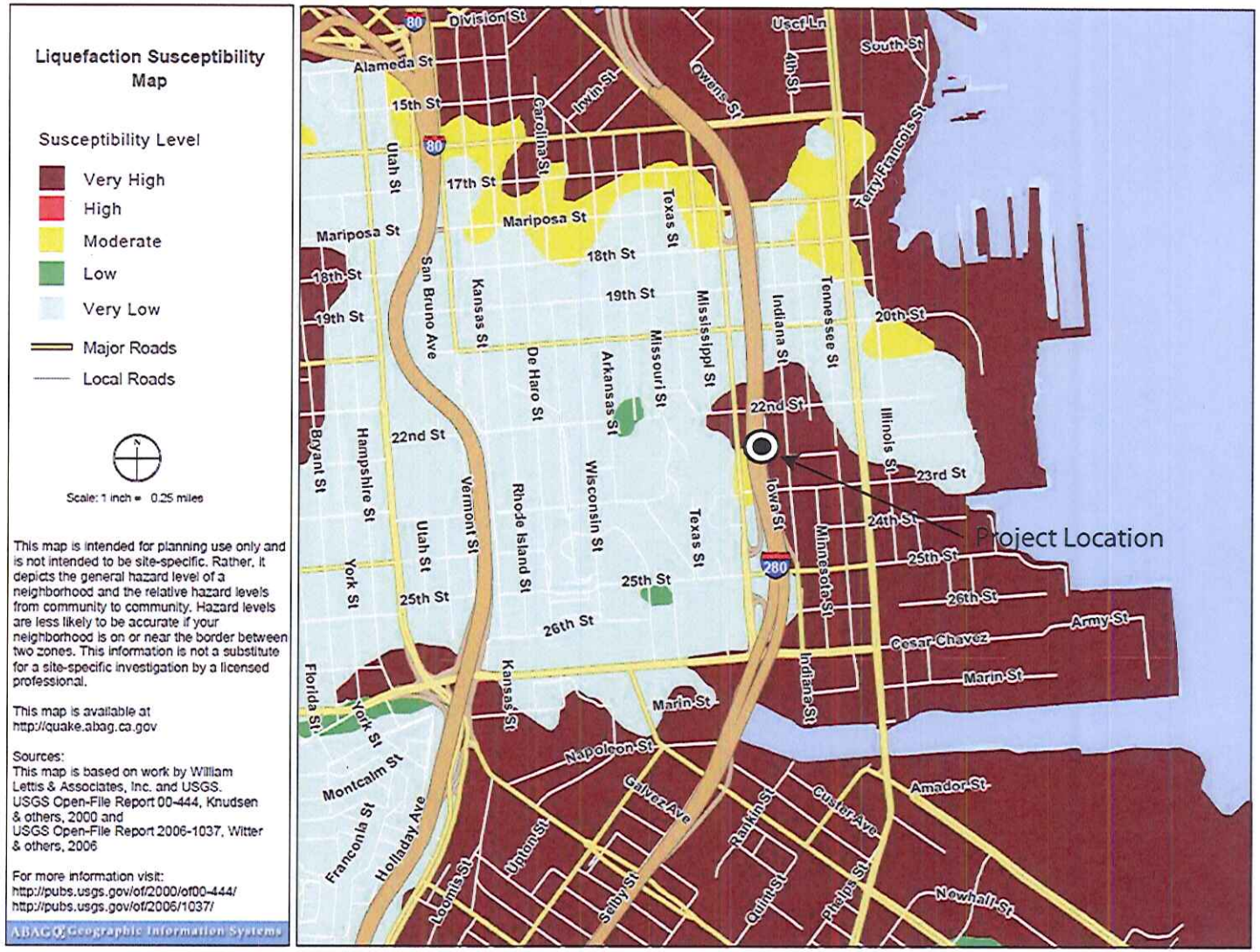

SCALE **Not to Scale**	Caltrans	**DIVISION OF** **ENGINEERING SERVICES** GEOTECHNICAL SERVICES GEOTECHNICAL DESIGN - WEST – BRANCH B	**LIQUEFACTION MAP** **04-SF-101** **0412000014** **PM. 3.4** **MAY 2013** **FIGURE 5**

Dist	COUNTY	ROUTE	POST MILES TOTAL PROJECT	SHEET No.	TOTAL SHEETS
04	SF	101	3.4		

REGISTERED CIVIL ENGINEER DATE

PLANS APPROVAL DATE

REGISTERED PROFESSIONAL ENGINEER NO. EXP. CIVIL STATE OF CALIFORNIA

THE STATE OF CALIFORNIA OR ITS OFFICERS OR AGENTS SHALL NOT BE RESPONSIBLE FOR THE ACCURACY OR COMPLETENESS OF SCANNED COPIES OF THIS PLAN SHEET.

CURVE DATA

No. ⊙	R	Δ	T	L	N	E
1	2500'	2°53'58"	63.27'	126.51'	461794.82	1447696.23
2	2000'	5°41'51"	99.52'	198.88'	462692.30	1448147.77
3	1000'	18°4'20"	159.03'	315.42'	462845.91	1449135.90

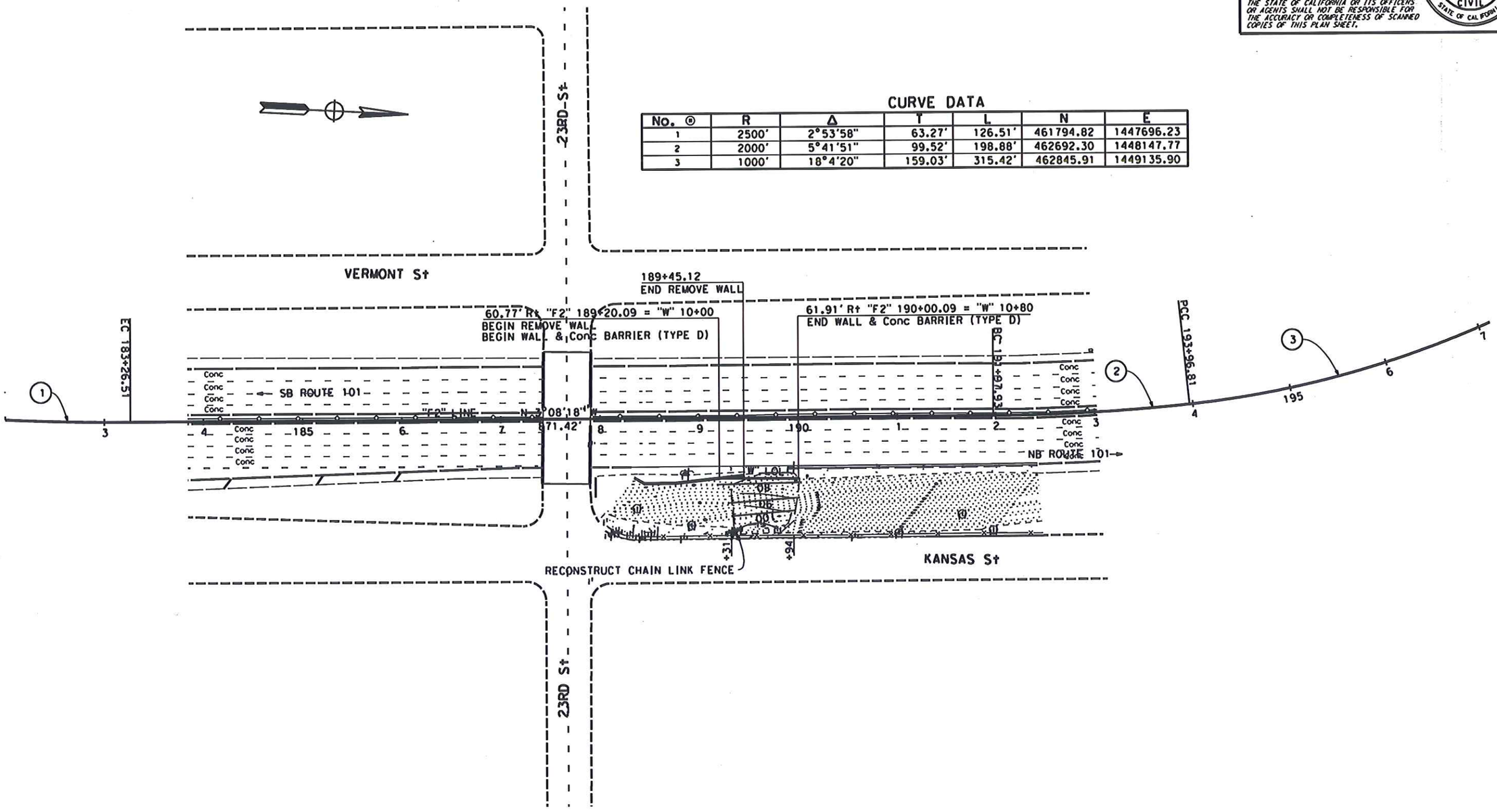

LAYOUT

SCALE: 1" = 50'

L-1

STATE OF CALIFORNIA - DEPARTMENT OF TRANSPORTATION	CALCULATED-DESIGNED BY	AN NGUYEN	REVISED BY	ATN
DESIGN	CHECKED BY	ARLISSA PANG	DATE REVISED	10-05-12
	FUNCTIONAL SUPERVISOR	ARLISSA PANG		

LAST REVISION 10-05-12 DATE PLOTTED => $DATE TIME PLOTTED => $TIME

BORDER LAST REVISED 7/27/2010 USERNAME => $USER RELATIVE BORDER SCALE IS IN INCHES 0 1 2 3 UNIT 0702 PROJECT NUMBER & PHASE 04120000141

...\04-3G1701_Revised Layout.dgn 11/15/2013 10:45:13 AM PST

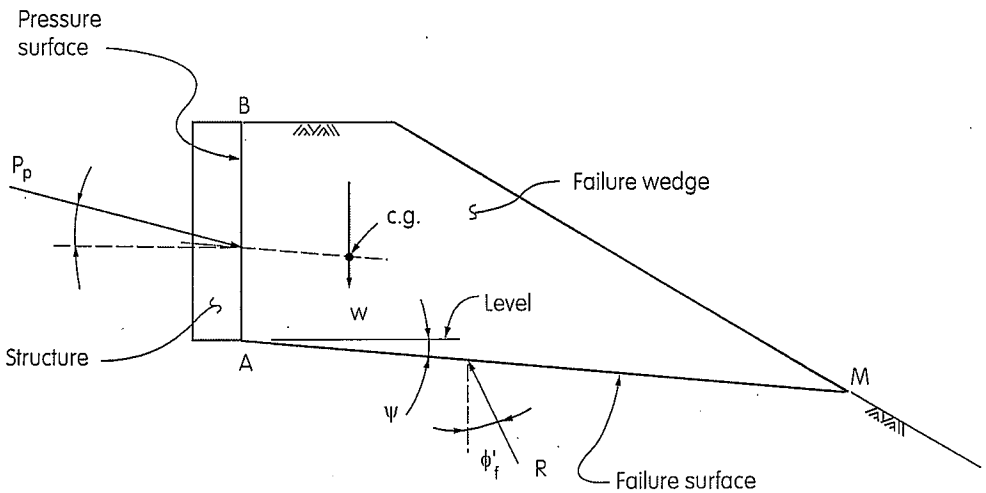

Figure 5.5.5.5-6 Trial Wedge Method-Passive Pressure, Coulomb's Theory

Figure 5.5.5.5-6 shows the assumptions used in the determination of the resultant passive pressure for a broken back slope condition applying Coulomb's theory. The pressure surface, AB, moves toward the backfill soil by rotating in a clockwise direction about, A, and may also translate to the right sufficiently to create a passive state of stress in the backfill soil. This movement causes a failure surface to form. It is assumed that this surface is a plane, AM. The wedge of soil, BAM, moves downward along the failure surface and also upward relative to the pressure surface of the structure. This wedge, whose weight is, W, is held in equilibrium by the resultant passive pressure, P_p, acting on the surface, AB, and the resultant force, R, acting on the failure surface, AM. Since the wedge moves upward along, AB, the force, P_p, acts with an assumed obliquity, δ, above the normal to oppose this movement. Similarly, the force, R, acts with an obliquity, ϕ'_f, to the normal in a direction that opposes movement of the wedge along the failure surface. For any assumed direction of the failure surface, AM, as defined by angle ψ from the horizontal, the directions of, W, R, and, P_p, are known or assumed, and the magnitude of, P_p, can be determined. With the trial wedge method of analysis, the direction of the failure surface, AM, is varied until the determined magnitude of, P_p, is a minimum. The point of application of the resultant passive pressure on the pressure surface is determined by passing a line through the center of gravity (c.g.) of the weight of the failure wedge which is parallel to the failure surface, AM. The point at which this line intersects the pressure surface, AB, is the point of application of the resultant passive pressure.

5.5.5.6 Lateral Earth Pressures For Non-Gravity Cantilevered Walls

For permanent walls, the simplified lateral earth pressure distributions shown in Figures 5.5.5.6-1 and 5.5.5.6-2 may be used. If walls will support or are supported by cohesive soils for temporary applications, the walls may be designed based on total stress methods of analysis and undrained shear strength parameters. For this latter case, the simplified lateral earth pressure distributions shown in Figures 5.5.5.6-3, and 5.5.5.6-4 may be used with the following restrictions:

- The ratio of total overburden pressure to undrained shear strength, N_S (see Article 5.5.5.7.2), must be <3 at the design grade in front of wall.
- The active lateral earth pressure acting over the wall height, H, shall not be less than *0.25* times the effective overburden pressure at any depth, or *0.036* KSF/FT of wall height, which ever is greater.

For temporary walls with vertical elements embedded in granular soil or rock and retaining cohesive soil, Figures 5.5.5.6-1 and 5.5.5.6-2 may be used to determine the lateral earth pressure distributions on the embedded portion of the vertical elements and Figure 5.5.5.6-4 may be used to determine the lateral earth pressure distribution due to the retained cohesive soil.

The lateral earth pressure distributions in Figures 5.5.5.6-1 thru 5.5.5.6-4 shown acting on the embedded portion of vertical wall elements shall be applied to the effective width, b', of discrete vertical wall elements. See Article 5.7.6 for effective widths of discrete vertical wall elements to be used.

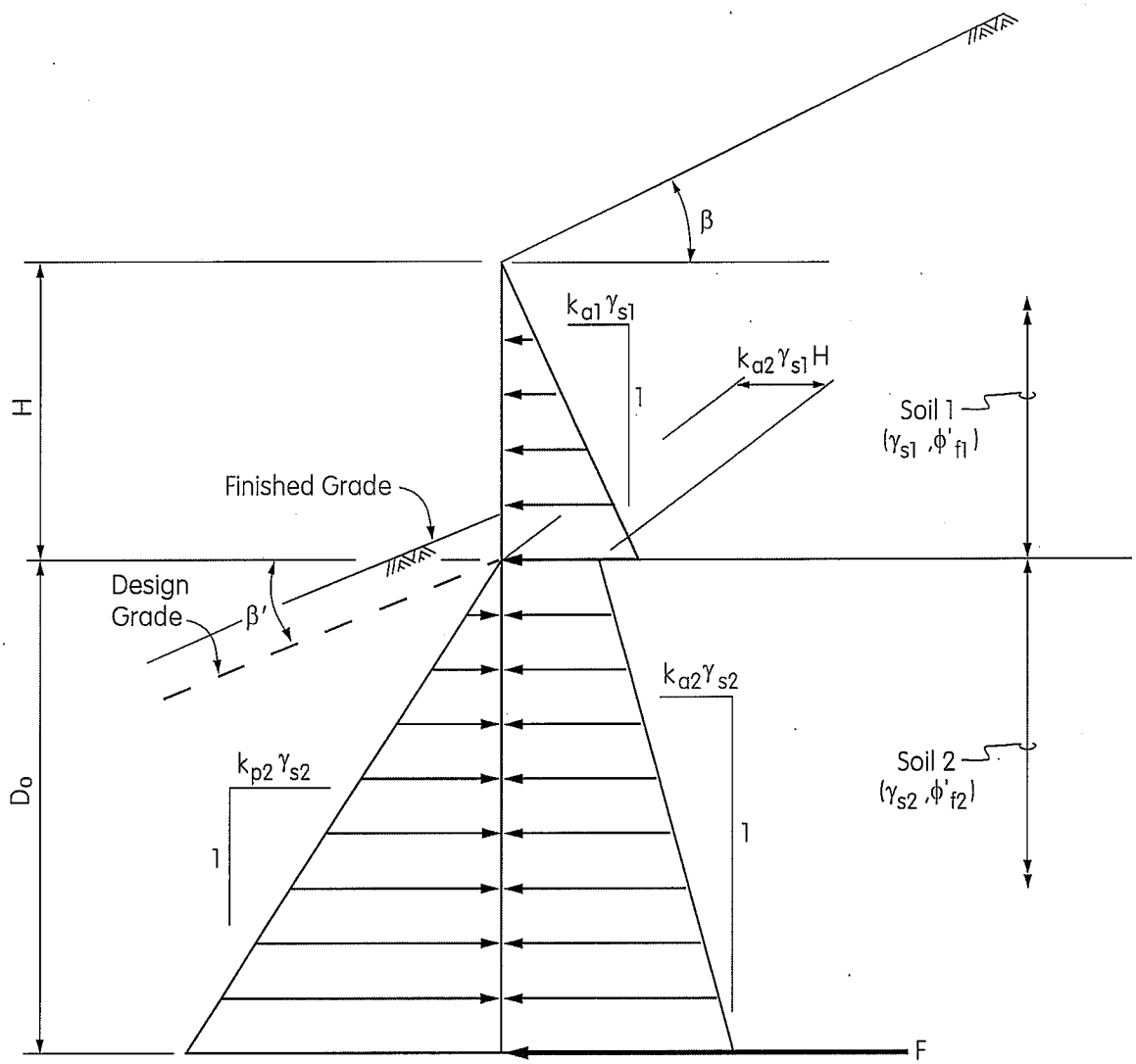

Note: The value of β' is negative for the slope shown.

Figure 5.5.5.6-1 Simplified Lateral Earth Pressure Distributions for Permanent Non-gravity Cantilevered Walls with Vertical Wall Elements Embedded in Granular Soil and Retaining Granular Soil

Photo of water line after repair. Across from 1163 Kansas Street.

04-SF-101 PM 3.4 EA: 04-930322

Photo showing irrigation lines and the collect pipe (brown) for the horizontal drains.

04-SF-101 PM 3.4 EA: 04-930322

Photo of water line break location. Across from 1163 Kansas Street.

04-SF-101 PM 3.4 EA: 04-930322

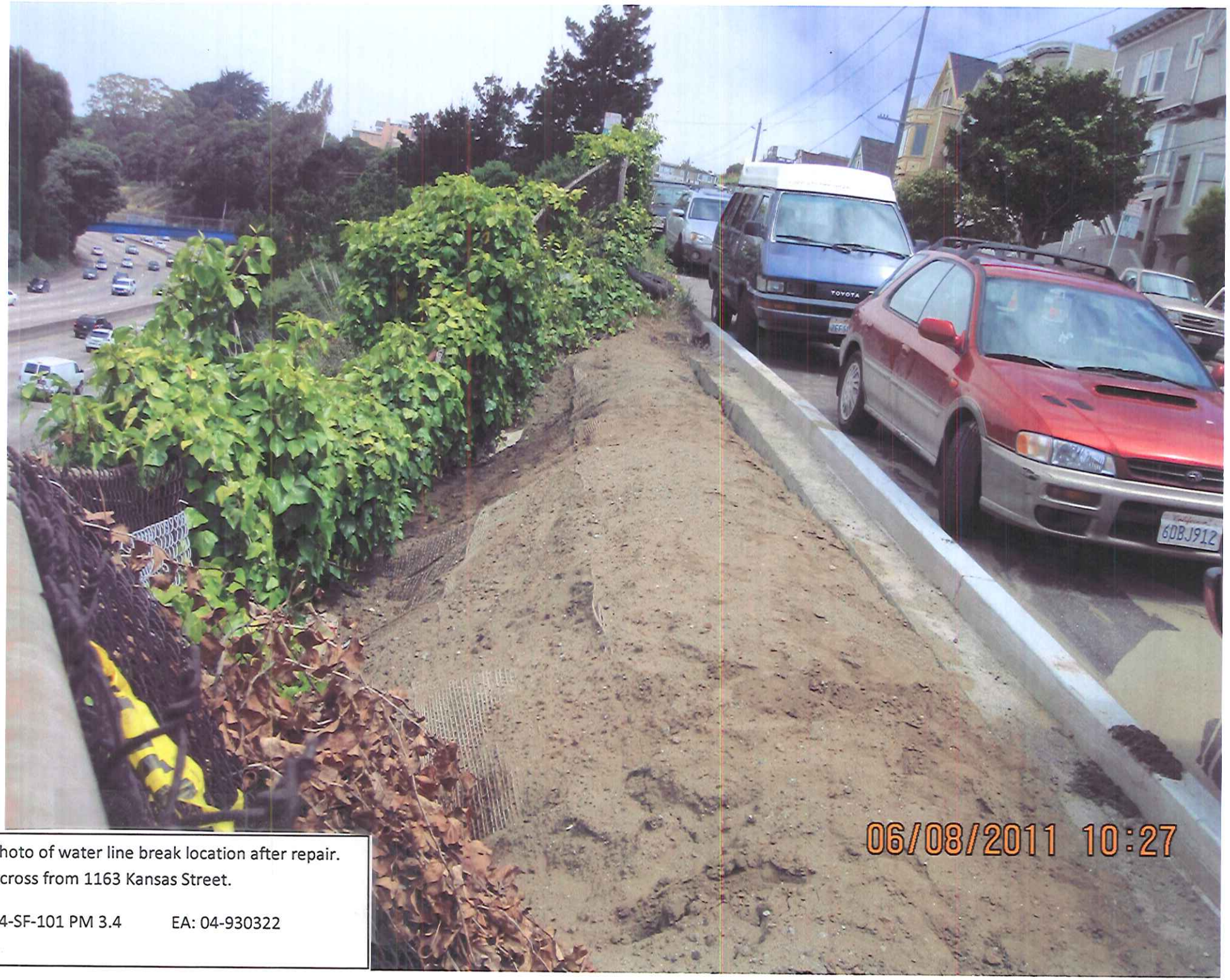

Photo of water line break location after repair.
Across from 1163 Kansas Street.

04-SF-101 PM 3.4 EA: 04-930322

Boring location Station 190+02, right 54.9 ft
elev. 77.0 ft

LOGGED BY	BEGIN DATE	COMPLETION DATE	BOREHOLE LOCATION (Lat/Long or North/East and Datum)	HOLE ID
M Gaffney	8-20-13	8-20-13	4178823.9 ft / 552596.4 ft	RW-13-001
DRILLING CONTRACTOR: CT			BOREHOLE LOCATION (Offset, Station, Line)	SURFACE ELEVATION: 80.0 ft
DRILLING METHOD: Rotary Wash			DRILL RIG: CS 2000 (truck) (6382)	BOREHOLE DIAMETER: 4 in
SAMPLER TYPE(S) AND SIZE(S) (ID): SPT (1.4")			SPT HAMMER TYPE	HAMMER EFFICIENCY, ERI
BOREHOLE BACKFILL AND COMPLETION			GROUNDWATER READINGS: DURING DRILLING / AFTER DRILLING (DATE)	TOTAL DEPTH OF BORING: 40.0 ft

ELEVATION (ft)	DEPTH (ft)	Material Graphics	DESCRIPTION	Sample Location	Sample Number	Blows per 6 in.	Blows per foot	Recovery (%)	RQD (%)	Moisture Content (%)	Dry Unit Weight (pcf)	Shear Strength (tsf)	Drilling Method	Casing Depth	Remarks
	0		ASPHALT CONCRETE.												
	1		Poorly graded GRAVEL (GP); very loose; greenish gray; moist; coarse, angular GRAVEL.												
78.00	2														
	3														
76.00	4														
	5				1	5 2 2	4	33							
74.00	6														
	7														
72.00	8														
	9														
70.00	10				2	7 16 36	52	67							
	11		Well-graded GRAVEL (GW); very dense; dark gray; moist; coarse, angular GRAVEL ; broken metal pieces.												
68.00	12														
	13														
66.00	14		GRAVELLY lean CLAY (CL); very stiff; olive gray; some fine to coarse GRAVEL ; 2.2.												
	15					8 11 12	23	0							CR, R
64.00	16														
	17		METAMORPHIC ROCK (SERPENTINITE); greenish gray; intensely weathered; moderately soft; very intensely fractured; (NATIVE).		1			86	86						
62.00	18									11	129	UC =			
	19														
60.00	20				3	9 14 18	32	67							
	21														
58.00	22				2			100	57						
	23														
56.00	24														
	25														

(continued)

Department of Transportation
Division of Engineering Services
Geotechnical Services
Office of Geotechnical Design - West

REPORT TITLE				HOLE ID
BORING RECORD				RW-13-001
DIST. 04	COUNTY SF	ROUTE 101	POSTMILE 3.4	PROJECT ID 0412000014
PROJECT OR BRIDGE NAME: 04-SF-101 PM 3.4				
BRIDGE NUMBER	PREPARED BY		DATE 8-20-13	SHEET 1 of 2

5 BR - STANDARD KANSAS.GPJ DRAFT CALTRANS LIBRARY OCT 2011.GLB 11/20/13

ELEVATION (ft)	DEPTH (ft)	Material Graphics	DESCRIPTION	Sample Location	Sample Number	Blows per 6 in.	Blows per foot	Recovery (%)	RQD (%)	Moisture Content (%)	Dry Unit Weight (pcf)	Shear Strength (tsf)	Drilling Method	Casing Depth	Remarks
	25		Greenish gray; Slickensided/sheared.			20/1"	REF	0							
54.00	26		METAMORPHIC ROCK (Serpentinite) *(continued)*.												
	27				3			43	0						
52.00	28		Greenish black; moderately weathered.												
	29														
50.00	30				4	44 50/5"	50/5	83							
	31														
48.00	32				4			86	0						
	33														
46.00	34														
	35		Black; hard.		5	50/3"	REF	0							
44.00	36														
	37				5			95	0						
42.00	38														
	39		Light gray. Brownish black.							10	130	UC =			
40.00	40		Bottom of borehole at 40.0 ft bgs												
	41														
38.00	42		This Boring Record was developed in accordance with the Caltrans Soil & Rock Logging, Classification, and Presentation Manual (2010) except as noted on the Soil or Rock Legend or below.												
	43														
36.00	44														
	45														
34.00	46														
	47														
32.00	48														
	49														
30.00	50														
	51														
28.00	52														
	53														
26.00	54														
	55														

$\Sigma R_i = 86\%$

Department of Transportation
Division of Engineering Services
Geotechnical Services
Office of Geotechnical Design - West

REPORT TITLE				HOLE ID
BORING RECORD				RW-13-001
DIST. 04	COUNTY SF	ROUTE 101	POSTMILE 3.4	PROJECT ID 0412000014
PROJECT OR BRIDGE NAME 04-SF-101 PM 3.4				
BRIDGE NUMBER	PREPARED BY		DATE 8-20-13	SHEET 2 of 2

5 BR - STANDARD KANSAS.GPJ DRAFT CALTRANS LIBRARY OCT 2011.GLB 11/20/13

PRELIMINARY SITE INVESTIGATION REPORT

US-101/23rd STREET OVERCROSSING
SAN FRANCISCO, CALIFORNIA

PREPARED FOR:
CALIFORNIA DEPARTMENT OF TRANSPORTATION
DISTRICT 4
OFFICE OF ENVIRONMENTAL ENGINEERING
111 GRAND AVENUE, MS8C
OAKLAND, CA 94612

PREPARED BY:
GEOCON CONSULTANTS, INC.
6671 BRISA STREET
LIVERMORE, CA 94550

GEOCON PROJECT NO. E8560-02-56
CALTRANS EA 04-3G1701
CALTRANS PROJECT # 04-1200-0014-1

DECEMBER 2013

TABLE OF CONTENTS

PRELIMINARY SITE INVESTIGATION REPORT Page

REPORT LIMITATIONS i

PROJECT TEAM ii

1.0 INTRODUCTION 1
- 1.1 Project Description and Proposed Improvements 1
- 1.2 General Objectives 1

2.0 BACKGROUND 1
- 2.1 Hazardous Waste Determination Criteria 1
- 2.2 DTSC Variance 2
- 2.3 Environmental Screening Levels 3

3.0 SCOPE OF SERVICES 4
- 3.1 Pre-field Activities 4
- 3.2 Field Activities 4

4.0 INVESTIGATIVE METHODS 5
- 4.1 Sampling Procedures 5
- 4.2 Laboratory Analyses 6
- 4.3 Laboratory QA/QC 6

5.0 INVESTIGATIVE RESULTS 7
- 5.1 Subsurface Conditions 7
- 5.2 Laboratory Analytical Results 7
- 5.3 Laboratory Quality Assurance/Quality Control 8
- 5.4 Statistical Evaluation for Lead Detected in Soil Samples 8

6.0 CONCLUSIONS 10
- 6.1 Lead in Soil 10
- 6.2 Remaining CAM 17 Metals in Soil 11
- 6.3 Organics in Soil 12
- 6.4 Naturally-Occurring Asbestos in Soil 12
- 6.5 CAM 17 Metals in Groundwater 13
- 6.6 Organics and pH in Groundwater 14
- 6.7 Worker Protection 14

TABLE OF CONTENTS
(Continued)

PRELIMINARY SITE INVESTIGATION REPORT

FIGURES

1. Vicinity Map
2. Site Plan

TABLES

1. Boring Coordinates
2. Summary of Lead and pH Results - Soil
3. Summary of CAM 17 Metals Results - Soil
4. Summary of Organics Results – Soil
5. Summary of NOA Results - Soil
6. Summary of CAM 17 Metals Results - Groundwater
7. Summary of Organics and pH Results – Groundwater
8. Summary of Lead Statistical Analysis

APPENDICES

A. DTSC Variance
B. Laboratory Reports and Chain-of-custody Documentation
C. Metal Statistical Analysis

REPORT LIMITATIONS

This report has been prepared exclusively for the State of California Department of Transportation (Caltrans) District 4. The information contained herein is only valid as of the date of the report and will require an update to reflect additional information obtained.

This report is not a comprehensive site characterization and should not be construed as such. The findings as presented in this report are predicated on the results of the limited sampling and laboratory testing performed. In addition, the information obtained is not intended to address potential impacts related to sources other than those specified herein. Therefore, the report should be deemed conclusive with respect to only the information obtained. We make no warranty, express or implied, with respect to the content of this report or any subsequent reports, correspondence or consultation. Geocon strived to perform the services summarized herein in accordance with the local standard of care in the geographic region at the time the services were rendered.

The contents of this report reflect the views of the author who is responsible for the facts and accuracy of the data presented herein. The contents do not necessarily reflect the official views or policies of the State of California or the Federal Highway Administration. This report does not constitute a standard, specification, or regulation.

GEOCON CONSULTANTS, INC.

Luann Beadle
Senior Staff Scientist

Richard Day, CEG, CHG
Senior Geologist

PROFESSIONAL GEOLOGIST
RICHARD W. DAY
No. 5479
Exp. 09-30-15
STATE OF CALIFORNIA

CALIFORNIA DEPARTMENT OF TRANSPORTATION – DISTRICT 4
OFFICE OF ENVIRONMENTAL ENGINEERING

Reviewed By:	Recommended By:	Approved By:
Ramin Behani, PE Task Order Manager	Ray Boyer, PE District Branch Chief	Allen Baradar, PE District Office Chief

PROJECT TEAM

Contact	Affiliation	Responsibility
Romy Fuentes, PE 510.622.8803 510.622.0198 fax romy_f_fuentes@dot.ca.gov	Caltrans – District 4 Consultant Services 111 Grand Avenue, MS7B Oakland, CA 94612	Contract Manager
Ramin Behani, PE 510.286.5755 510.286.5639 fax ramin.behani@dot.ca.gov	Caltrans – District 4 Environmental Engineering 111 Grand Avenue, MS8C Oakland, CA 94612	Task Order Manager
Richard Day, CEG, CHG Luann Beadle 925.371.5900 925.371.5915 fax livermore@geoconinc.com	Geocon Consultants, Inc. 6671 Brisa Street Livermore, CA 94550 *(Caltrans Consultant)*	Project Management Sample Collection Field QA/QC Investigation Report
Doug Krause, CIH 530.758.6397 530.758.6506 fax dskrause@pacbell.net	Krause & Associates 216 F. Street Suite 162 Davis, CA 95616 (*Geocon Subconsultant*)	Health and Safety
Leah Phillips 831.461.1468 831.461.1470 fax dispatch@cruzbrothers.com	Cruz Brothers Locators, Inc. P.O. Box 66768 Scotts Valley, CA 95067 *(Geocon Subcontractor)*	Utility Clearance Services
Allen Keen 800.953.2636 408.436.1675 fax allendmtraffic@yahoo.com	D & M Traffic Services 845 Reed Street Santa Clara, CA 95050 (*Geocon Subconsultant*)	Traffic Control
Jose Tenorio, Jr. 702.307.2659 702.307.2691 fax jojo@atl-labs.com	Advanced Technology Laboratories 3151 Post Road Las Vegas, NV 89118 *(Geocon Subcontractor)*	Soil and Groundwater Sample Analysis
Baojia Ke 510.895.3675 510.895.3680 fax sanleandrolab@emsl.com	EMSL Analytical, Inc. 2235 Polvorosa Ave., Suite 230 San Leandro, CA 94577 (*Geocon Subcontractor*)	Soil Sample Analysis

PRELIMINARY SITE INVESTIGATION REPORT

1.0 INTRODUCTION

This Preliminary Site Investigation Report for a slope repair project along northbound (NB) United States Highway 101 (US-101) in San Francisco, California was prepared by Geocon Consultants, Inc. under California Department of Transportation (Caltrans) Contract No. 04A3578 and Task Order No. 56 (TO-56), EA 04-3G1701.

1.1 Project Description and Proposed Improvements

The project proposes to repair a slipout on a cut slope with rock slope protection and to install a soldier pile retaining wall. The slipout is located along NB US-101 at the 23rd Avenue overcrossing in the City and County of San Francisco, California, at Post Mile 3.4 (PM 3.4). Work will take place within Caltrans right-of-way. The project location is depicted on the attached Vicinity Map, Figure 1.

1.2 General Objectives

The purpose of the site investigation was to evaluate concentrations of California Assessment Manual 7 (CAM 17) metals, particularly aerially-deposited lead (ADL), petroleum hydrocarbons, and naturally-occurring asbestos (NOA) in soil, and metals and petroleum hydrocarbons in groundwater, if encountered.

The information obtained from this investigation will be used by Caltrans to evaluate soil and groundwater handling practices, worker health and safety, and soil and groundwater reuse and disposal options.

2.0 BACKGROUND

2.1 Hazardous Waste Determination Criteria

Regulatory criteria to classify a waste as California hazardous for handling and disposal purposes are contained in the CCR, Title 22, Division 4.5, Chapter 11, Article 3, §66261.24. Criteria to classify a waste as Resource, Conservation, and Recovery Act (RCRA) hazardous are contained in Chapter 40 of the Code of Federal Regulations (40 CFR), Section 261.

For waste containing metals, the waste is classified as California hazardous when: 1) the representative total metal content equals or exceeds the respective Total Threshold Limit Concentration (TTLC); or 2) the representative soluble metal content equals or exceeds the respective Soluble Threshold Limit Concentration (STLC) based on the standard Waste Extraction Test (WET). A waste has the potential of exceeding the STLC when the waste's total metal content is greater than or equal to ten times the respective STLC value since the WET uses a 1:10 dilution ratio. Hence, when a total metal is detected at a

concentration greater than or equal to ten times the respective STLC, and assuming that 100 percent of the total metals are soluble, soluble metal analysis is required. A material is classified as RCRA hazardous, or Federal hazardous, when the representative soluble metal content equals or exceeds the Federal regulatory level based on the Toxicity Characteristic Leaching Procedure (TCLP).

The above regulatory criteria are based on chemical concentrations. Wastes may also be classified as hazardous based on other criteria such as ignitability and corrosivity; however, for the purposes of this investigation, toxicity (i.e., representative lead concentrations) is the primary factor considered for waste classification since waste generated during the construction activities would not likely warrant testing for ignitability or other criteria. Waste that is classified as either California hazardous or RCRA hazardous requires management as a hazardous waste.

2.2 DTSC Variance

The DTSC issued a statewide Variance effective July 1, 2009, regarding the management of ADL-impacted soils within Caltrans right-of-way. Under the Variance, soil that is classified as a non-RCRA hazardous waste, based primarily on ADL content, may be suitable for reuse within Caltrans right-of-way. ADL soil that is classified as a RCRA hazardous waste is not eligible for reuse under the Variance and must be disposed of as a RCRA hazardous waste (Caltrans Type Z-3).

ADL soil reused under the Variance must always be at least five feet above the highest groundwater elevation and, depending on lead concentrations, must be covered with at least one foot of non-hazardous soil or a pavement structure. The ADL soil may not be placed in areas where it might contact groundwater or surface water (such as streams and rivers), and must be buried in locations that are protected from erosion that may result from storm water run-on and run-off.

Review of the statewide Variance indicates the following conditions regarding the reuse and management of ADL-impacted soil as fill material for construction and maintenance operations. If ADL soil meets the Variance criteria but is not intended to be reused within Caltrans right-of-way, then the excavated soil must be disposed of as a California hazardous waste (Caltrans Type Z-2). A copy of the Variance is presented as Appendix A.

Caltrans Type Y-1: ADL soil exhibiting a total lead concentration less than or equal to 1,411 milligrams per kilogram (mg/kg), a DI-WET (WET using deionized water as extractant) lead concentration less than or equal to 1.5 milligrams per liter (mg/l), and a pH value greater than or equal to 5.5 may be reused within the same Caltrans corridor and must be covered with at least one foot of non-hazardous soil.

Caltrans Type Y-2: ADL soil exhibiting a total lead concentration less than or equal to 1,411 mg/kg, a DI-WET lead concentration less than or equal to 1.5 mg/l, and a pH value greater than 5 and less than 5.5 may be reused within the same Caltrans corridor and must be covered and protected from infiltration by a pavement structure.

ADL soil exhibiting a total lead concentration less than or equal to 1,411 mg/kg, a DI-WET lead concentration greater than 1.5 mg/l and less than or equal to 150 mg/l, and a pH value greater than 5 may be reused within the same Caltrans corridor and must be covered and protected from infiltration by a pavement structure.

ADL soil exhibiting a total lead concentration greater than 1,411 mg/kg and less than or equal to 3,397 mg/kg, a DI-WET lead concentration less than or equal to 150 mg/l, and a pH value greater than 5 may be reused within the same Caltrans corridor and must be covered and protected from infiltration by a pavement structure.

Caltrans Type Z-2: ADL soil exhibiting a total lead concentration greater than 3,397 mg/kg, a DI-WET lead concentration greater than 150 mg/l, or a pH value less than or equal to 5 is not eligible for reuse under the Variance and must be disposed of as a California hazardous waste.

Caltrans Type Z-3: ADL soil exhibiting a TCLP lead concentration greater than or equal to 5 mg/l is not eligible for reuse under the Variance and must be disposed of as a RCRA hazardous waste.

2.3 Environmental Screening Levels

The San Francisco Bay Regional Water Quality Control Board (SFRWQCB) has prepared a technical report entitled *Screening For Environmental Concerns At Sites With Contaminated Soil and Groundwater, Interim Final* (updated May 2013), which presents Environmental Screening Levels (ESLs) for soil, groundwater, soil gas, and surface water, to assist in evaluating sites impacted by releases of hazardous chemicals. The ESLs are conservative values for more than 100 commonly detected contaminants which may be used to compare with environmental data collected at a site. "The ESLs are intended to help expedite the identification and evaluation of potential environmental concerns at sites where contamination has been identified. Data collected at a site can be directly compared to the ESLs, and the need for additional actions quickly determined" (RWQCB May 2013). ESLs are strictly risk assessment tools and "not intended to serve as a rule to determine if a waste is hazardous under the state or federal regulations (RWQCB May 2013)."

Residential and commercial/industrial land use ESLs are commonly used by contractors, soil trucking companies, and private and commercial land owners as default acceptance criteria to evaluate suitability of import soil material. The following ESL tables were used for this characterization:

- Table A. Shallow Soil (≤3m bgs), Groundwater is a Current or Potential Source of Drinking Water
- Table B. Shallow Soil (≤3m bgs), Groundwater is not a Current or Potential Source of Drinking Water
- Table K-3. Direct Exposure Soil Screening Levels, Construction/Trench Worker Exposure Scenario
- Table F. Surface Water Bodies

The respective ESLs are listed at the end of Tables 3, 4, 6, and 7 for comparative purposes.

3.0 SCOPE OF SERVICES

The scope of services performed under TO-56, EA 04-3G1701 included the following:

3.1 Pre-field Activities

- Prepared the *Preliminary Site Investigation Workplan* and *Health and Safety Plan*, dated September 2013.
- Retained the services of Cruz Brothers Locators to provide utility clearance services prior to field operations.
- Retained the services of D & M Traffic Services to provide traffic control during field operations.
- Retained the services of Advanced Technology Laboratories, Las Vegas (ATL-LV), a Caltrans-approved and California-certified analytical laboratory, to perform the chemical analyses of soil and groundwater samples.
- Retained the services of EMSL, Inc., a Caltrans-approved and California-certified analytical laboratory, to perform the asbestos analysis of soil samples.
- Notified Underground Service Alert (USA) at least 48 hours prior to field work.

3.2 Field Activities

The field investigation was performed on September 23 and 29, 2013, by Geocon staff. The following field activities were performed during the sampling efforts:

- Advanced 4 soil borings at the project location using direct-push and hand auger drilling techniques. The borings were advanced to a maximum depth of 13 feet.
- Collected 12 soil samples for CAM 17 metals analysis.
- Collected 3 soil samples for total lead analysis.
- Collected 10 soil samples for TPHd and TPHmo analysis.

- Collected 10 soil samples for TPHg analysis.
- Collected 5 samples for pH analysis.
- Collected 15 soil samples for NOA analysis.

One groundwater sample was collected from an existing on-site monitoring well for CAM 17 metals, TPHd, TPHmo, TPHg, and pH analyses.

All samples were transported to California-certified environmental laboratories for analysis under standard chain-of-custody (COC) documentation.

4.0 INVESTIGATIVE METHODS

4.1 Sampling Procedures

Soil samples were collected from four boring locations identified by the Caltrans TO Managers using hand-auger and direct-push sampling techniques. A groundwater sample was collected from an onsite monitoring well using disposable polyethylene tubing fitted with a check valve. Boring coordinates are presented on Table 1 and locations are shown on the Site Plan, Figure 2.

Soil samples collected using a hand-auger were placed in resealable plastic bags or stainless steel tubes and sealed with Teflon tape and plastic lids prior to being stored in a chest cooled with ice.

Soil samples collected using a direct-push sample rig were obtained by hydraulically advancing a two-inch-diameter, four-foot-long stainless steel core-barrel sampler lined with an acetate sample tube into undisturbed soil. Soil samples were collected for laboratory analysis by cutting an approximately six-inch-long section of the acetate tube from the target sample depth, capping the ends with Teflon tape and plastic end caps.

The grab-groundwater sample was pumped from the tubing fitted with a check valve directly into the appropriate sample containers.

Sample containers were labeled, placed in a chest cooled with ice as necessary, and transported to Caltrans-approved, certified environmental laboratories using standard COC documentation. Hand auger soil borings were back-filled to surface with soil cuttings; direct-push borings were backfilled to near-surface with neat cement, then to surface with cold-patch asphalt.

Geocon provided QA/QC procedures during the field activities. These procedures included washing the sampling equipment with a Liqui-Nox® solution followed by a double rinse with deionized water. Decontamination water was disposed of to the ground surface within Caltrans right-of-way in a manner not to create runoff, away from drain inlets or potential water bodies.

4.2 Laboratory Analyses

Laboratory analyses were performed by ATL-LV and EMSL under regular and expedited turnaround-time (TAT). The laboratory reports and COC documentation are included in Appendix B.

The soil samples were analyzed as follows:

- 12 samples for CAM 17 metals according to EPA Test Methods 6010 ICAP and 7471.
- 3 samples for total lead according to EPA Test Method 6010 ICAP.
- 11 samples with total chromium concentrations equal to or exceeding 50 mg/kg (i.e., equal to or exceeding ten times the chromium STLC of 5.0 mg/l) were further analyzed for WET chromium.
- 2 samples with total lead concentrations equal to or exceeding 50 mg/kg (i.e., equal to or exceeding ten times the lead STLC of 5.0 mg/l) were further analyzed for WET lead.
- 2 samples with WET lead concentrations exceeding 5.0 mg/l were further analyzed for DI-WET lead.
- 2 samples with total lead exceeding 100 mg/kg and WET lead exceeding 5.0 mg/l were further analyzed for TCLP lead.
- 8 samples with total nickel concentrations exceeding 200 mg/kg (i.e., equal to or exceeding ten times the STLC of 20 mg/l) were further analyzed for WET nickel.
- 10 samples for TPHd and TPHmo according to EPA Test Method 8015.
- 10 samples for TPHg according to EPA Test Method 8015.
- 5 samples for pH using EPA Test Method 9045C.
- 15 samples for NOA using CARB 435.

The groundwater sample was analyzed for CAM 17 metals using EPA Test Methods 6010 and 7470, TPHd, TPHmo, and TPHg according to EPA Test Method 8015, and pH using Test Method SM4500.

4.3 Laboratory QA/QC

QA/QC procedures were performed for each method of analysis with specificity for each analyte listed in the test method's QA/QC. The laboratory QA/QC procedures included the following:

- One method blank for every ten samples, batch of samples or type of matrix, whichever was more frequent.
- One sample analyzed in duplicate for every ten samples, batch of samples or type of matrix, whichever was more frequent.
- One spiked sample for every ten samples, batch of samples or type of matrix; whichever was more frequent, with spike made at ten times the detection limit or at the analyte level.

Prior to submitting the samples to the laboratories, the COC documentation was reviewed for accuracy and completeness.

5.0 INVESTIGATIVE RESULTS

5.1 Subsurface Conditions

In order to facilitate direct-push rig soil sampling, asphalt coring was performed at location B1 along the right shoulder of NB US-101. Asphalt was present at a thickness of approximately eight inches. Observations during field activities indicated that aggregate base fill material was present to a depth of approximately two feet. Yellowish brown sand was present to 10 feet. Hard, dark grey clay was present to a depth of 13 feet. Refusal was encountered at 13 feet. Groundwater was encountered at a depth of approximately 10 feet; however, quantities were insufficient to allow sample collection.

Two additional borings were advanced in an attempt to collect a groundwater sample; however, borings were met with refusal (at three feet and ten feet below ground surface) before reaching groundwater. The on-site Task Order Manager requested that a groundwater sample be collected from a nearby site monitoring well.

5.2 Laboratory Analytical Results

The analytical results are summarized in Tables 2 through 7 and below:

Soil Sample Results:

- The following metals were not detected above their respective laboratory reporting limits: antimony, beryllium, cadmium, molybdenum, silver, and thallium.
- Total lead was reported at concentrations ranging from <1.0 to 140 mg/kg.
- WET lead was reported at concentrations of 6.5 and 7.9 mg/l.
- DI-WET lead was not detected at or above the reporting limit of 0.25 mg/l.
- TCLP lead was not detected at or above the reporting limit of 0.25 mg/l.
- Total chromium was reported at concentrations ranging from 34 to 1,300 mg/kg.
- WET chromium was reported at concentrations ranging from <0.050 to 1.9 mg/l.
- Total nickel was reported at concentrations ranging from 37 to 1,700 mg/kg.
- WET nickel was reported at concentrations ranging from 1.7 to 14 mg/l.
- Remaining CAM 17 metals were reported in the samples at total concentrations below ten times their respective STLCs.
- TPHd was reported at concentrations ranging from 1.5 to 26 mg/kg.

- TPHmo was reported at concentrations ranging from 2.6 to 53 mg/kg.
- TPHg was not detected at or above the reporting limit of 1.0 mg/kg.
- pH ranged from 7.6 to 8.8.
- NOA was reported at concentrations ranging from none detected to 1.25% chrysotile.

Groundwater Sample Results:

- Antimony, arsenic, beryllium, cadmium, lead, mercury, molybdenum, selenium, silver, and thallium were not detected at or above the laboratory reporting limits.
- Barium, chromium, cobalt, copper, nickel, vanadium, and zinc were reported at concentrations ranging from 0.045 to 0.80 mg/l.
- TPHd was reported at a concentration of 0.21 mg/l.
- TPHmo was reported at a concentration of 0.23 mg/l.
- TPHg was not detected at or above the reporting limit of 0.050 mg/l.
- pH was measured as 8.5.

5.3 Laboratory Quality Assurance/Quality Control

We reviewed the QA/QC results provided with the laboratory analytical reports. One method blank reported copper above the reporting limit at an amount less than 10 percent of the amount measured in the associated sample. Remaining method blanks were non-detect at or above reporting limits. The Matrix Spike (MS) and/or Matrix Spike Duplicate (MSD) were outside recovery criteria for several samples, possibly due to matrix interference; however, the associated laboratory control sample (LCS) recoveries were acceptable. The relative percent differences (RPD) for MS/MSD were outside of recovery limits for several analytes, possibly due to matrix interference; however, the analytical batch was validated by the LCS. The RPD for MS/MSD was outside criteria for several samples; however, the analytical batch was validated by the LCS. Remaining samples and internal laboratory QA/QC samples showed acceptable recoveries and relative percent differences (RPDs). Based on this limited data review, no additional qualifications of the soil data are necessary, and the data are of sufficient quality for the purposes of this report.

5.4 Statistical Evaluation for Lead Detected in Soil Samples

Statistical methods were applied to the total lead data to evaluate the upper confidence limits (UCLs) of the arithmetic mean of the total lead concentration for the Site.

The upper one-sided 90% and 95% UCLs of the arithmetic mean are defined as the values that, when calculated repeatedly for randomly drawn subsets of site data, equal or exceed the true mean 90% and 95% of the time, respectively. The UCLs of the arithmetic mean concentration are used as the mean concentrations because it is not possible to know the true mean due to the essentially infinite number of

soil samples that could be collected from a site. The UCLs therefore account for uncertainties due to limited sampling data. As data become less limited at a site, uncertainties decrease, and the UCLs move closer to the true mean. Due to the limited data set, however, UCLs could not be calculated for the site by depth. Non-parametric bootstrap techniques were used to calculate the UCLs for the Site to a depth of 3.0 feet for comparative purposes. The bootstrap test results are included in Appendix B. The following table presents the calculated UCLs and statistics for the site.

Borings B1 to B4 by Depth

Sample Interval (feet)	Total Lead 90% UCL (mg/kg)	Total Lead 95% UCL (mg/kg)	Total Lead Mean (mg/kg)	Total Lead Minimum (mg/kg)	Total Lead Maximum (mg/kg)
0 to 0.5	NC	NC	77.2	5.7	140
1 to 1.5	NC	NC	20.9	2.5	49
2.5 to 3	NC	NC	12.9	0.5	39

NC – Not calculated due to insufficient dataset population

Borings B1 to B4 for Site to 3.0 Feet

Sample Interval (feet)	Total Lead 90% UCL (mg/kg)	Total Lead 95% UCL (mg/kg)	Total Lead Mean (mg/kg)	Total Lead Minimum (mg/kg)	Total Lead Maximum (mg/kg)
0 to 3	46.8	51.3	31.8	0.5	140

6.0 CONCLUSIONS

Waste classifications are evaluated based on the 90% UCL of the lead content for the relevant excavation depths when sufficient data exists to perform calculations; this has historically been considered sufficient to satisfy a good faith effort by the EPA as discussed in SW-846. Risk assessment characterization is based on the 95% UCL of the lead content in the waste for the relevant depths; this is in accordance with the Risk Assessment Guidance for Superfund (RAGS) Volume 1 Documentation for Exposure Assessment. Per Caltrans, the 90% UCLs are to be used to evaluate onsite reuse and the 95% UCLs are to be used to evaluate offsite disposal.

6.1 Lead in Soil

Because the data set population was insufficient to perform UCL calculations by each sample depth, the following table summarizes the predicted waste classification for excavated soil based on the maximum total lead values and maximum WET lead concentrations for the surface samples and underlying soil samples collected from the Site. The data is also summarized in Table 8.

Excavation Depth	Maximum Total Lead (mg/kg)	Maximum WET Lead (mg/l)	Waste Classification
0 to 1 ft	140	**7.9**	**Hazardous**
Underlying Soil (1 to 3 ft)	*49*	*NA*	*Non-hazardous*

NA – Not analyzed for WET lead because total lead concentrations were less than ten times the STLC of 5.0 mg/l

Based on the data presented in the above table, soil excavated to a depth of 1.0 foot would be classified as a California hazardous waste since the maximum WET lead concentration is greater than the lead STLC of 5.0 mg/l. Based on the reported DI-WET and pH results, soil excavated from 0 to 1.0 foot may be reused onsite (as Caltrans Type Y-1) in accordance with the DTSC Variance by placing the excavated soil under clean fill or pavement. Based on the TCLP lead results, excavated soil would not be classified as a RCRA hazardous waste.

Underlying soil (i.e., deeper than 1.0 foot) would be classified as non-hazardous based on lead content.

Alternately, if soil is excavated to a depth of 3.0 feet and managed as a whole, then sufficient data exist to calculate the UCL to determine waste classification. The total lead 90% UCL concentration of 46.8 mg/kg is less than the TTLC of 1,000 mg/kg and less than 50 mg/kg (i.e., less than ten times the STLC of 5 mg/l).

Excavation Depth	90% UCL Total Lead (mg/kg)	90% UCL WET Lead (mg/l)	Waste Classification
0 to 3 ft	46.8	NA	Non-hazardous

NA – Not analyzed for WET lead because total lead concentrations were less than ten times the STLC of 5.0 mg/l

Based on the data presented in the above table, soil excavated to a depth of 3.0 feet and managed as a whole would be classified as non-hazardous based on lead content.

6.2 Remaining CAM 17 Metals in Soil

Eleven samples contained total chromium at concentrations of greater than 50 mg/kg (i.e., greater than ten times the STLC of 5 mg/l). The samples were further analyzed for WET chromium and the reported concentrations were below the STLC. Total chromium concentrations in remaining samples were below ten times the STLC. Accordingly, excavated soil would be classified as non-hazardous based on chromium content.

Eight samples contained total nickel at concentrations of greater than 200 mg/kg (i.e., greater than ten times the STLC of 20 mg/l). The samples were further analyzed for WET nickel and the reported concentrations were below the STLC. Total nickel concentrations in remaining samples were below ten times the STLC. Accordingly, excavated soil would be classified as non-hazardous based on nickel content.

With the exceptions of chromium, lead, and nickel, CAM 17 metals were reported in the samples at total concentrations below ten times their respective STLCs.

The CAM 17 metals concentrations in site soil were compared to ESLs. Arsenic, chromium, cobalt, lead, and nickel were reported at concentrations greater than one or more ESL values. Non-parametric bootstrap techniques were used to calculate the UCLs for arsenic, chromium, cobalt, lead, and nickel. The bootstrap test results are included in Appendix C. ESLs, UCLs, and published background concentrations for arsenic, chromium, cobalt, lead, and nickel are summarized in the table below:

Metal	Maximum	95% UCL	Shallow Soil Residential ESL	Shallow Soil Commercial/ Industrial ESL	Worker Direct Exposure ESL	Published Background Mean[1]	Published Background Range [1]
Arsenic	17	6.34	0.39	0.96	10	3.5	0.6 to 11.0
Chromium	1,300	486	750	750	460,000	122	23 to 1,579
Cobalt	96	42.8	23	80	49	14.9	2.7 to 46.9
Lead	140	51.3	80	320	320	23.9	12.4 to 97.1
Nickel	1,700	682	150	150	6,100	57	9.0 to 509

Concentrations reported in mg/kg
[1] Kearney Foundation of Soil Science, March 1996

The 95% UCL arsenic concentration is greater than the residential and commercial land use ESLs; however, it is less than the construction exposure ESL and within the published background range. The SFRWQCB *November 2007 Update to Environmental Screening Levels (ESLs) Technical Document* states that ambient background concentrations of arsenic typically exceed risk-based screening levels. In such instances, it may be more appropriate to compare site data to regionally specific established

background levels. Based on the reported results for arsenic, offsite reuse or disposal of excavated soil may be restricted based on arsenic content, depending on proposed use.

The 95% UCL chromium concentration is less than the residential and commercial land use ESLs, less than the construction exposure ESL, and within the published background range.

The 95% UCL cobalt concentration is greater than the residential land use ESL; however, it is below the commercial land use ESL and the construction exposure ESL, and is within the published background range.

The 95% UCL lead concentration is less than the residential land use, commercial/industrial land use and construction exposure ESLs, and within the published background range.

The 95% UCL nickel concentration is greater than the residential and commercial land use ESLs and the background range; however, it is less than the construction exposure ESL.

Metals results for soil samples are summarized in Tables 2 and 3.

6.3 Organics in Soil

TPHg was not detected at or above the laboratory reporting limits. TPHd and TPHmo were reported in soil samples at concentrations of up to 26 and 53 mg/kg, respectively, below residential and commercial/industrial land use ESLs, and below the construction exposure ESL (SFRWQCB, May 2013, Tables A and K-3). A summary of organic compound concentrations in site soil is presented in Table 4.

6.4 Naturally-Occurring Asbestos in Soil

Fifteen soil samples were collected from the site and analyzed for asbestos by CARB Test Method 435 using polarized light microscopy (PLM) and at a target sensitivity of 0.25% asbestos. Chrysotile asbestos was reported at 1.25% in two samples (B3-1 and B3-2.5). Five samples (B2-0, B2-1, B2-2.5, B3-0, and B4-1) were reported to contain trace (<0.25% chrysotile) asbestos. The remaining eight samples were reported to be non-detect for asbestos.

ATCM 93105 sets forth measures to be followed for the investigation and control of naturally occurring asbestos for construction sites. ATCM 93105 allows for the mathematical averaging of analytical results from a soil mass in order to determine the average asbestos content. Convention is to use one-half of the reporting or detection limit as the assumed contaminant content for soils when averaging results. Thus for averaging purposes, the eight samples reported as non-detect as well as the trace quantity result were assumed to contain 0.125% asbestos, and the average of the 15 samples collected from the site is 0.275%, above the 0.25% regulatory threshold.

Construction/maintenance activities involving potentially asbestos-containing materials may fall under regulatory jurisdiction of the California Division of the Occupational Safety and Health Administration (Cal-OSHA) under CCR Title 8 Section 5208. Mitigation measures during construction/maintenance activities should be utilized to minimize potential releases of NOA to air (dust control) and surface waters (stormwater discharge).

Currently, regulatory exposure limits and health hazard data are not available for NOA in soils. Federal regulations governing asbestos define it as the asbestiform variety of the amphibole minerals actinolite, amosite, anthophyllite, crocidolite, and tremolite, and the asbestiform variety of serpentine, chrysotile. Asbestos fibers occurring in industrial materials are considered by the National Institute for Occupational Safety and Health as potential occupational carcinogens. Prudence is recommended, therefore, in dealing with soils potentially containing NOA. Engineering controls, such as wet methods for dust suppression, should be utilized to minimize aerial dispersion of NOA fibers in planned work areas during excavation and construction activities. Under Title 8 Section 5208 of the CCR, disturbance of asbestos-containing materials requires wet working methods and possible respiratory protection and air monitoring. The CARB has established protocols outlined in Title 17, Section 93105 for the implementation of worker health, safety and monitoring plans for excavation, grading and transport of NOA-containing soils. The excavation contractor should consult Title 17, Section 93105 and contact Cal-OSHA to establish the appropriate regulatory protocol and actions necessary for excavation and/or disturbance of asbestos-containing soils.

Additionally, it is Caltrans policy that the contractor(s) prepare a project-specific Asbestos Compliance Plan (CCR Title 8, Section 1529, the "Asbestos in Construction" standard) on projects where personnel may be in contact with materials known to contain NOA and that wet methods be employed to minimize the potential for airborne asbestos and potential worker exposure to asbestos-containing materials. The plan should include protocols for environmental and personnel monitoring, requirements for personal protective equipment, and other health and safety protocols and procedures for the handling of asbestos-containing soil. A summary of NOA results is included in Table 5.

6.5 CAM 17 Metals in Groundwater

Grab-groundwater samples were collected from existing on-site monitoring well MW. Samples were analyzed for CAM 17 metals. Antimony, arsenic, beryllium, cadmium, lead, mercury, molybdenum, selenium, silver, and thallium were not detected at or above the laboratory reporting limits. Chromium, cobalt, copper, nickel, vanadium, and zinc were reported at concentrations exceeding their respective ESLs for groundwater as a current/potential source of drinking water, groundwater not as a current or potential source of drinking water, and surface water for freshwater, marine and estuarine environments. Barium was reported at a concentration below the ESLs. CAM 17 Metals results for the groundwater sample and corresponding ESL values are summarized in Table 6.

Based on the reported CAM 17 metals concentrations, groundwater generated during construction may require treatment to reduce metal content prior to discharge or disposal.

6.6 Organics and pH in Groundwater

The groundwater sample collected from monitoring well MW was analyzed for TPHd, TPHmo, TPHg, and pH. TPHg was not detected at or above the laboratory reporting limit of 0.050 mg/l. TPHd and TPHmo were reported in the sample at concentrations of 0.21 and 0.23 mg/l, respectively, above the ESLs for groundwater as a current/potential source of drinking water and surface water for freshwater environments, but below the ESLs for groundwater not as a current/potential source of drinking water, and surface water for marine or estuarine environments. (SFRWQCB, May 2013, Table F). The sample pH was reported to be 8.5 pH units. A summary of organic compound concentrations and pH for the groundwater sample is presented in Table 7.

6.7 Worker Protection

The contractor(s) should prepare a project-specific health and safety plan to prevent or minimize worker exposure to metals in soil and groundwater and NOA in soil. The plan should include protocols for environmental and personnel monitoring, requirements for personal protective equipment, and other health and safety protocols and procedures for the handling of soil and groundwater.

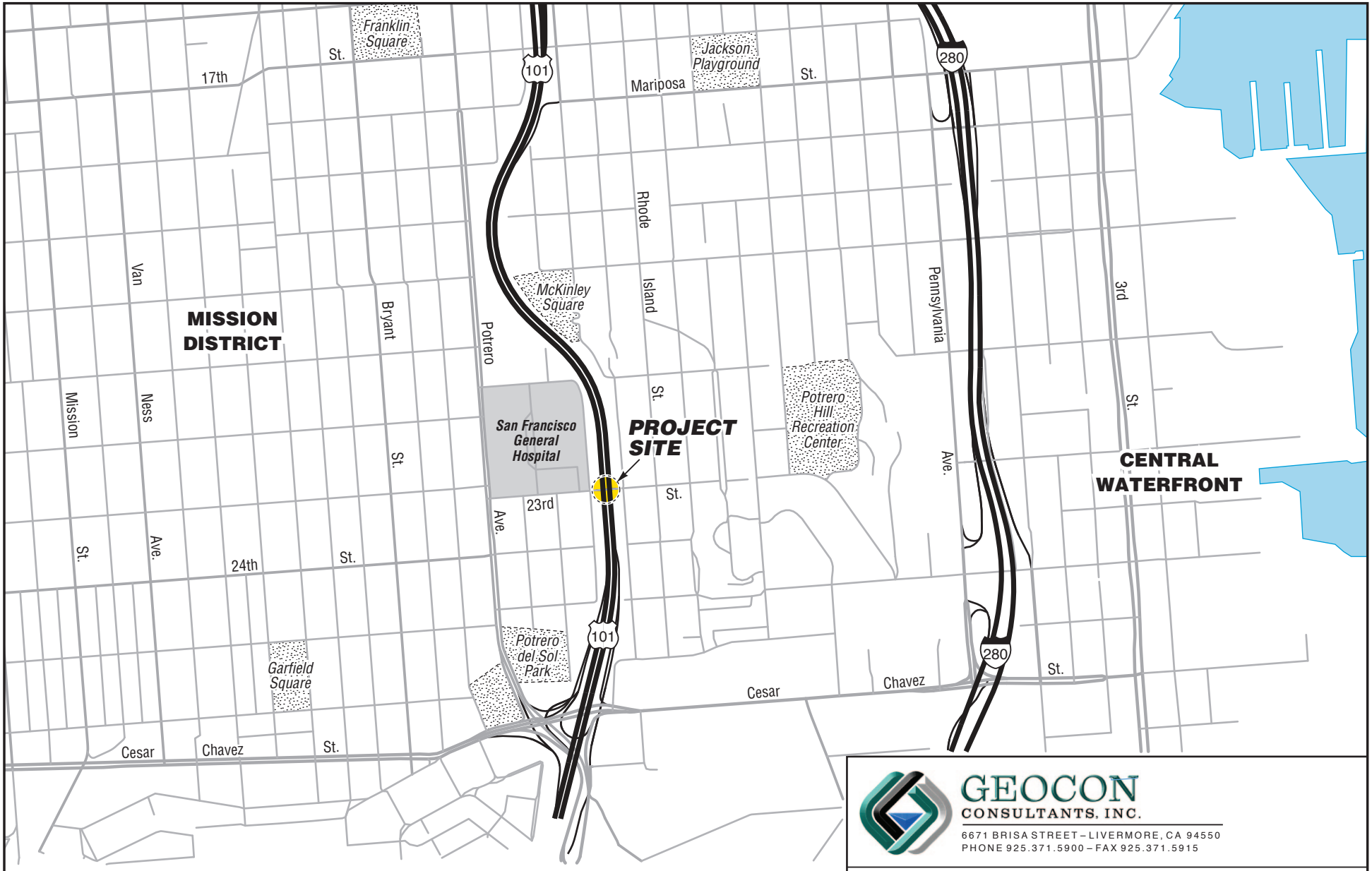

GEOCON
CONSULTANTS, INC.
6671 BRISA STREET – LIVERMORE, CA 94550
PHONE 925.371.5900 – FAX 925.371.5915

US-101 / 23rd Street Overcrossing

San Francisco, California	**VICINITY MAP**	
GEOCON Proj. No. E8560-02-56		
Task Order No. 56	December 2013	Figure 1

LEGEND:

- Boring Location
- Monitoring Well Location

N

0 30 60

SCALE: feet

GEOCON CONSULTANTS, INC.

6671 BRISA STREET, LIVERMORE, CA 94550; PHONE 925 371-5900 - FAX 925 371-5915

US-101 / 23rd Street Overcrossing

San Francisco, California

SITE PLAN

GEOCON Proj. No. E8560-02-56

EA No.

December 2013

Figure 2

SITE1213

TABLE 1
Boring Coordinates
US-101/23rd Street Overcrossing
San Francisco, California

Boring	Northing	Easting	Latitude	Longitude
B1	2,103,040.446	6,011,585.00	37.75518904	-122.4029210
B2	2,102,951.829	6,011,613.93	37.75495955	-122.4027734
B3	2,102,981.507	6,011,626.89	37.75504176	-122.4027307
B4	2,103,011.793	6,011,618.98	37.75512448	-122.4027601
MW	NM	NM	NM	NM

Coordinates shown in feet, NAD 83, Zone 3

NM - Not Measured

DIST	COUNTY	ROUTE	KILOMETER POST TOTAL PROJECT	SHEET No.	TOTAL SHEETS
04	SF,SM	101,280	Var	1	38

STATE OF CALIFORNIA

DEPARTMENT OF TRANSPORTATION

PROJECT PLANS FOR CONSTRUCTION ON STATE HIGHWAY

IN SAN MATEO COUNTY AND THE CITY AND COUNTY OF SAN FRANCISCO AT VARIOUS LOCATIONS

To be supplemented by Standard Plans dated July, 2004

INDEX OF SHEETS

Sheet No.	Description
1	Title and Location Map
2	Locations of Construction
3-10	Layouts
11-15	Construction Details
16-21	Temporary Water Pollution Control Plan, Details and Quantities
22-23	Utility Plans
24-29	Construction Area Signs
30-31	Summary of Quantities
32-37	Retaining Wall Plans
38	Revised Standard Plan

THE STANDARD PLANS LIST APPLICABLE TO THIS CONTRACT IS INCLUDED IN THE NOTICE TO CONTRACTORS AND SPECIAL PROVISIONS BOOK.

LEGEND

● MAINTENANCE VEHICLE PULLOUT

⬡ INDICATES ROUTE 280 WORK

○ INDICATES ROUTE 101 WORK

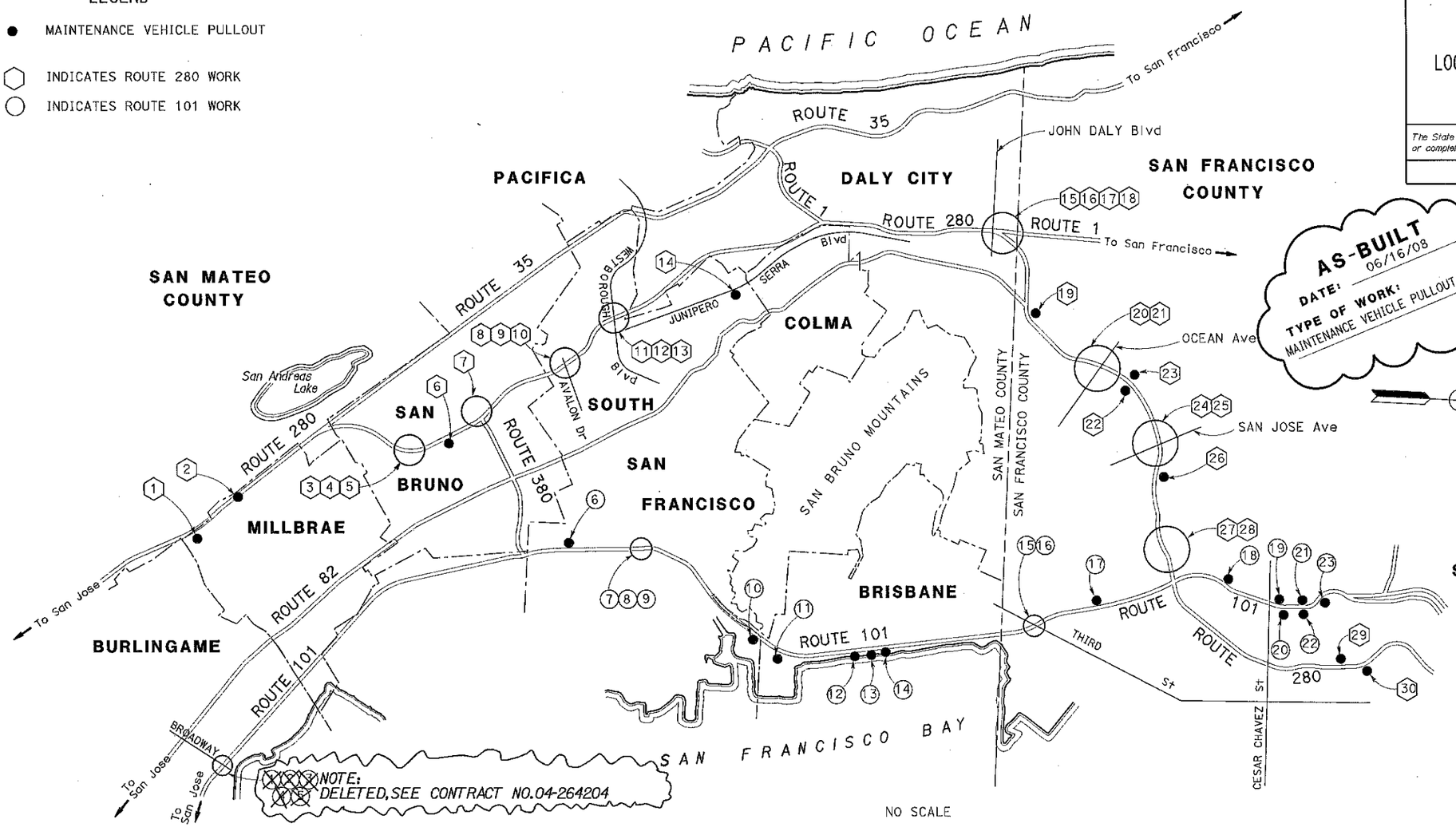

AS-BUILT
DATE: 06/16/08
TYPE OF WORK: MAINTENANCE VEHICLE PULLOUT & GATES

The State of California or its officers or agents shall not be responsible for the accuracy or completeness of electronic copies of this plan sheet.

To get to the Caltrans web site, go to: http://www.dot.ca.gov

Caltrans Metric

Resident Engineer Responsible for ***Construction Changes***

CONTRACT No. 04-246804
DATE ACCEPTED 03/04/08
AS BUILT
RESIDENT ENGINEER C Koos
SIGNATURE Charles Koos DATE 05/08/08
CHECKED BY OS DATE 06/2008

S. Jin Yoo 6-13-06
Project Engineer Date
Registered Civil Engineer

REGISTERED PROFESSIONAL ENGINEER S. Yoo No. 48016 Exp. 12-31-07 CIVIL STATE OF CALIFORNIA

September 18, 2006
Plans Approval Date

The Contractor shall possess the Class (or Classes) of license as specified in the ''Notice to Contractors''.

PROJECT ENGINEER	DATE	PROJECT MANAGER	DATE
SOJIN YOO	8/06	P. MAI	8/06

LAST REVISION 07-11-06

DATE PLOTTED => 21-JUN-2008
TIME PLOTTED => 06:30

Contract No. **04-246804**

FORM DC-OE-93-RE (REV. 3/88)

RELATIVE BORDER SCALE IS IN MILLIMETERS 0 20 40 60 80

USERNAME => s110549
DGN FILE => 4246804pb001.dgn

CU 04236

EA 246801

$MS_JEFF

DIST	COUNTY	ROUTE	KILOMETER POST TOTAL PROJECT	SHEET NO	TOTAL SHEETS
04	SF,SM	101,280	Var	32	38

REGISTERED CIVIL ENGINEER 6-13-06

9-18-06
PLANS APPROVAL DATE

REGISTERED PROFESSIONAL ENGINEER S. Yoo No. 48016 Exp. 12-31-07 CIVIL STATE OF CALIFORNIA

The State of California or its officers or agents shall not be responsible for the accuracy or completeness of electronic copies of this plan sheet.

To get to the Caltrans web site, go to: http://www.dot.ca.gov

Caltrans Metric

SEE HEADQUARTERS STRUCTURES CONSTRUCTION AS-BUILTS FOR CHANGES

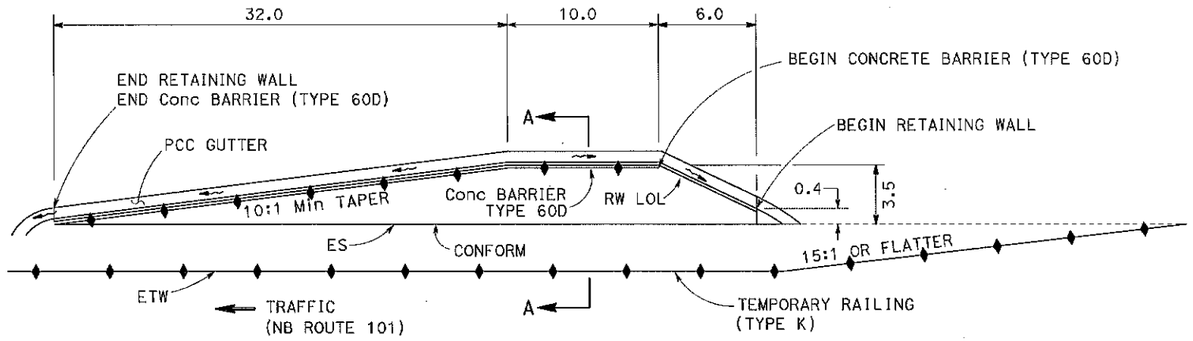

PLAN

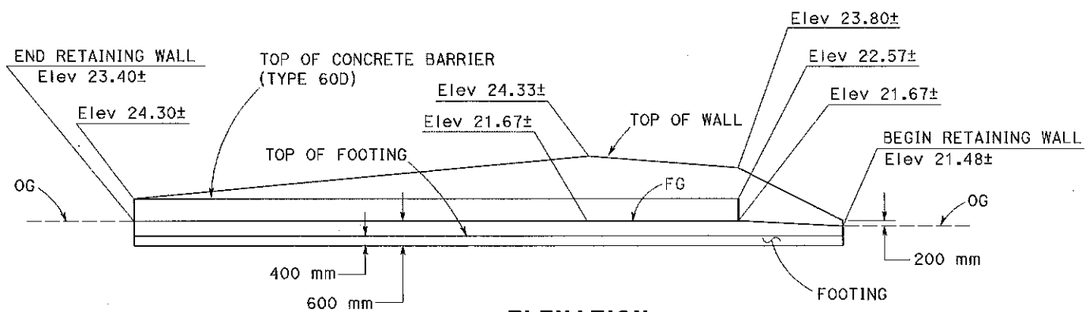

ELEVATION

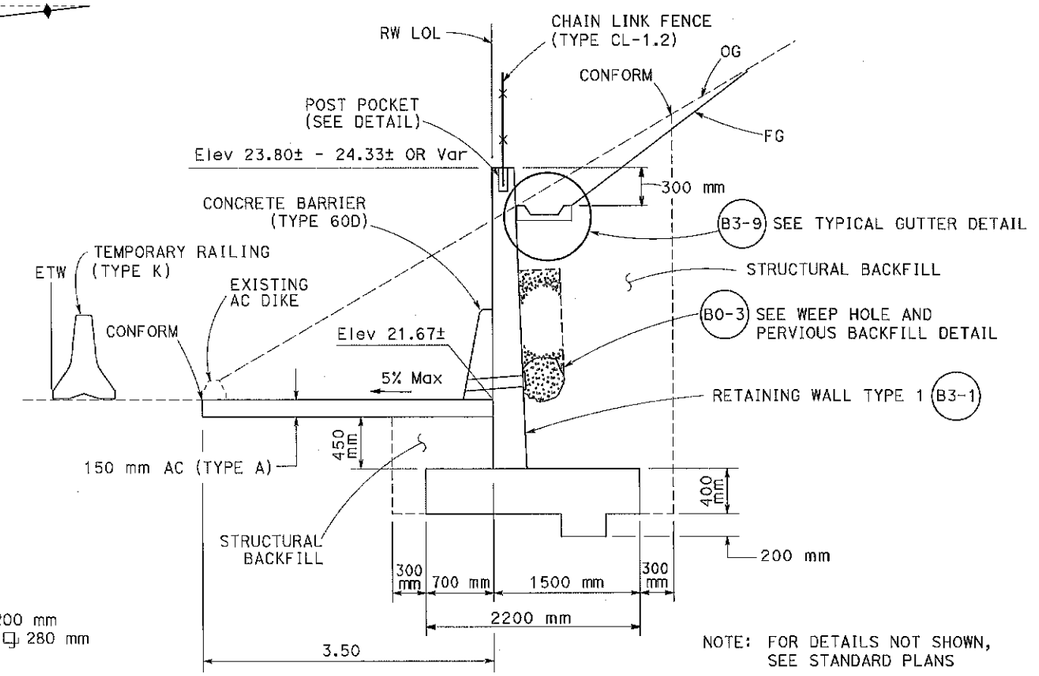

NOTE: FOR DETAILS NOT SHOWN, SEE STANDARD PLANS

SECTION A-A

RETAINING WALL TYPE 1

S A N F R A N C I S C O

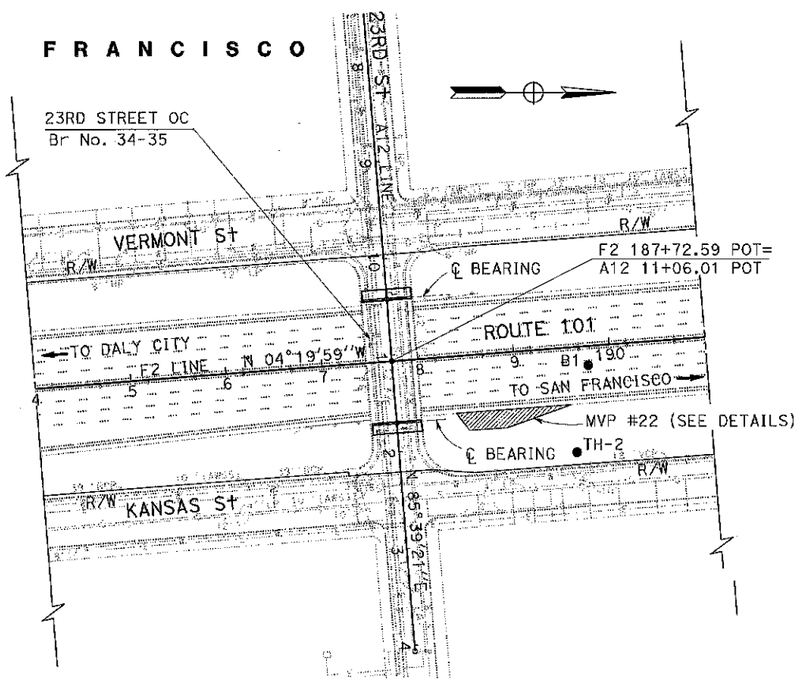

LOCATION OF MVP #22

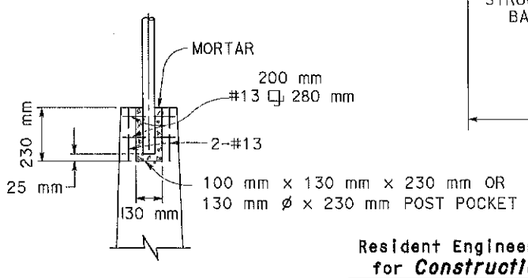

POST POCKET DETAIL

Resident Engineer Responsible for *Construction Changes*

CONTRACT No. 04-246804
DATE ACCEPTED 03/04/08
AS BUILT
RESIDENT ENGINEER C Koos
SIGNATURE Charles Koos DATE 05/08/08
CHECKED BY OS DATE 06/2008

LOCATION No. 22

NORTHBOUND ROUTE 101, MAINLINE, JUST PAST 23RD STREET OC, RIGHT SHOULDER

NOTES:

1. LOCATION OF MVP AS SHOWN OR DIRECTED BY ENGINEER.
2. TEMPORARY RAILING (TYPE K) AS SHOWN DURING RETAINING WALL CONSTRUCTION.
3. FOR LOG OF TEST BORINGS, SEE SHEETS R-2, 4, 6 AND 8. LOCATIONS OF TEST BORINGS ARE APPROXIMATE.

ALL DIMENSIONS ARE IN METERS UNLESS OTHERWISE SHOWN

THIS PLAN ACCURATE FOR RETAINING WALL WORK ONLY.

RETAINING WALL PLAN

NO SCALE

R-1

STATE OF CALIFORNIA - DEPARTMENT OF TRANSPORTATION
Caltrans PROJECT DEVELOPMENT

PROJECT ENGINEER SOJIN YOO

DATE	REVISED BY	DATE REVISED

CALCULATED/DESIGNED BY
CHECKED BY

LAST REVISION 07-11-06
DATE PLOTTED => 21-JUN-2008
TIME PLOTTED => 09:15

RELATIVE BORDER SCALE IS IN MILLIMETERS 0 20 40 60 80
USERNAME => s110549
DGN FILE => 4246804000001.dgn

CU 04236 EA 246801

DIST	COUNTY	ROUTE	KILOMETER POST TOTAL PROJECT	SHEET No.	TOTAL SHEETS
04	SF,SM	101,280	Var	36	38

Caltrans Metric

LICENSED LANDSCAPE ARCHITECT

9-18-06
PLANS APPROVAL DATE

LICENSED LANDSCAPE ARCHITECT ROBERT E. RYERSON NO. 3787 STATE OF CALIFORNIA
Registered Professional Engineer (Landscape Architect) 8-31-06 6-15-06 date

The State of California or its officers or agents shall not be responsible for the accuracy or completeness of electronic copies of this plan sheet.

To get to the Caltrans web site, go to: http://www.dot.ca.gov

Resident Engineer Responsible for *Construction Changes*

CONTRACT No. 04-246804
DATE ACCEPTED 03/04/08
AS BUILT
RESIDENT ENGINEER C Koos
SIGNATURE Charles Koos DATE 05/08/08
CHECKED BY OS DATE 06/16/08

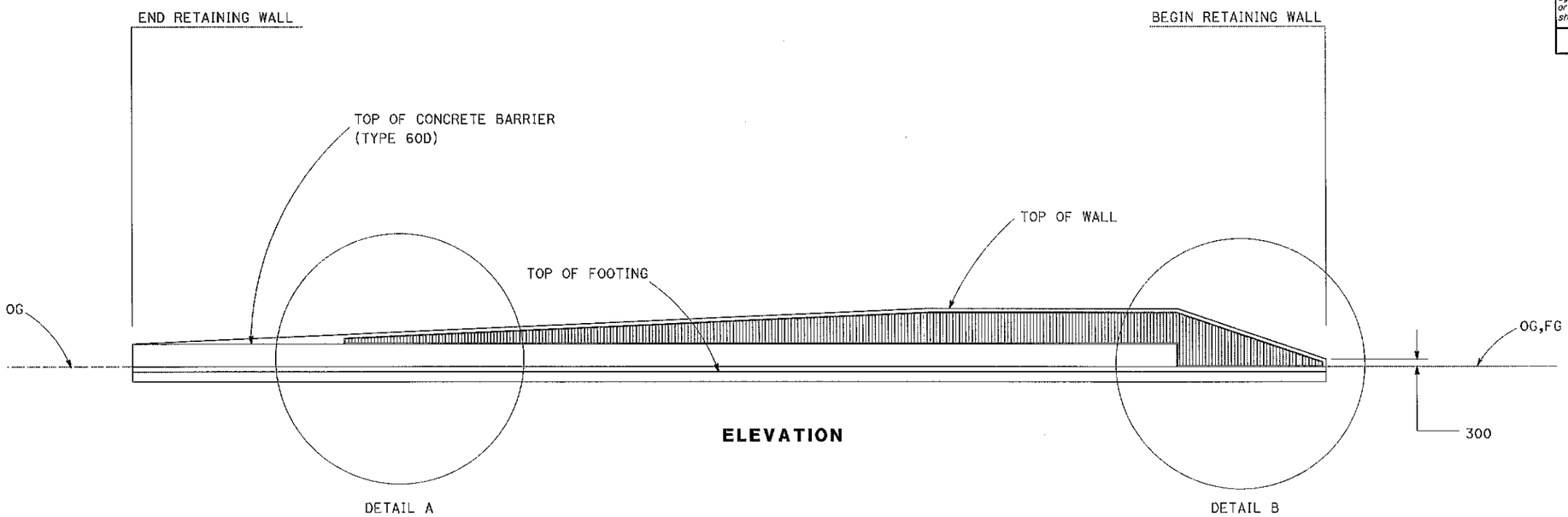

ELEVATION

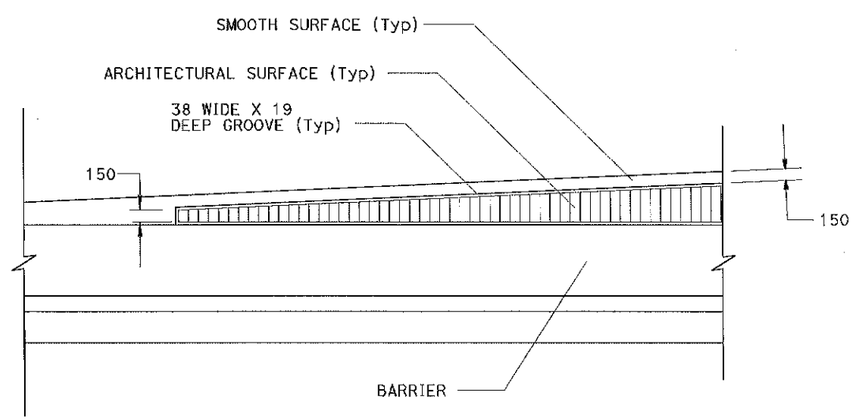

DETAIL A

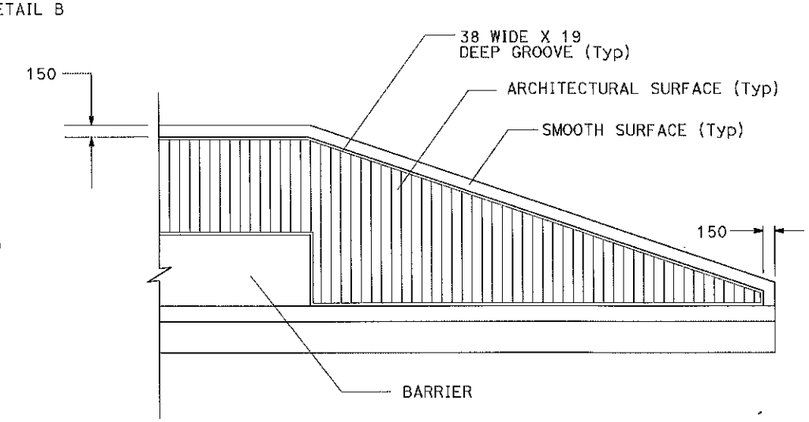

DETAIL B

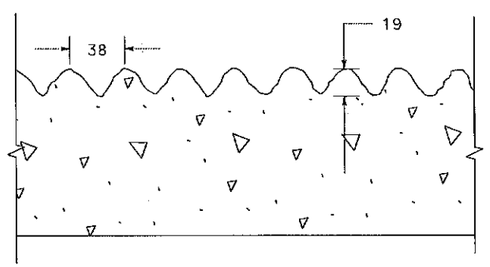

ARCHITECTURAL SURFACE CROSS SECTION

(FRACTURED RIB)

SEE HEADQUARTERS STRUCTURE CONSTRUCTION AS-BUILTS FOR CHANGES

ALL DIMENSIONS ARE IN MILLIMETERS UNLESS OTHERWISE SHOWN

RETAINING WALL DETAILS
RETAINING WALL AESTHETICS (Typ)

NO SCALE

R-5

THIS PLAN ACCURATE FOR AESTHETIC TREATMENT ONLY.

STATE OF CALIFORNIA - DEPARTMENT OF TRANSPORTATION
Caltrans LANDSCAPE ARCHITECTURE

PROJECT LANDSCAPE ARCHITECT ROBERT E RYERSON
CALCULATED/DESIGNED BY
CHECKED BY
DATE REVISED BY
DATE REVISED

LAST REVISION 07-11-06
DATE PLOTTED => 21-JUN-2008
TIME PLOTTED => 09:42

RELATIVE BORDER SCALE IS IN MILLIMETERS 0 20 40 60 80
USERNAME => s110549
DGN FILE => 4246804ce005.dgn

CU 04236
EA 246801