Dist	COUNTY	ROUTE	POST MILES TOTAL PROJECT	SHEET No.	TOTAL SHEETS
04	Son	116,12	26.7, 9.2	1	58

INDEX OF PLANS

SHEET No.	DESCRIPTION
1	TITLE AND LOCATION MAP
2	TYPICAL CROSS SECTIONS
3	LAYOUT
4-5	CONSTRUCTION DETAILS
6-9	DRAINAGE PLAN, PROFILE, DETAILS AND QUANTITIES
10	UTILITY PLANS
11	CONSTRUCTION AREA SIGNS
12-24	STAGE CONSTRUCTION PLANS AND QUANTITIES
25	PAVEMENT DELINEATION PLAN
26-27	SIGN PLANS AND QUANTITIES
28	QUANTITIES CONTRACTOR FURNISHED SIGNS
29	SUMMARY OF QUANTITIES
30-32	ELECTRICAL PLANS
33-58	REVISED AND NEW STANDARD PLANS

THE STANDARD PLANS LIST APPLICABLE TO THIS CONTRACT IS INCLUDED IN THE NOTICE TO BIDDERS AND SPECIAL PROVISIONS BOOK.

STATE OF CALIFORNIA

DEPARTMENT OF TRANSPORTATION

PROJECT PLANS FOR CONSTRUCTION ON

STATE HIGHWAY

IN SONOMA COUNTY
IN SEBASTOPOL
AT THE INTERSECTION OF ROUTE 116 AND ROUTE 12

TO BE SUPPLEMENTED BY STANDARD PLANS DATED MAY 2006

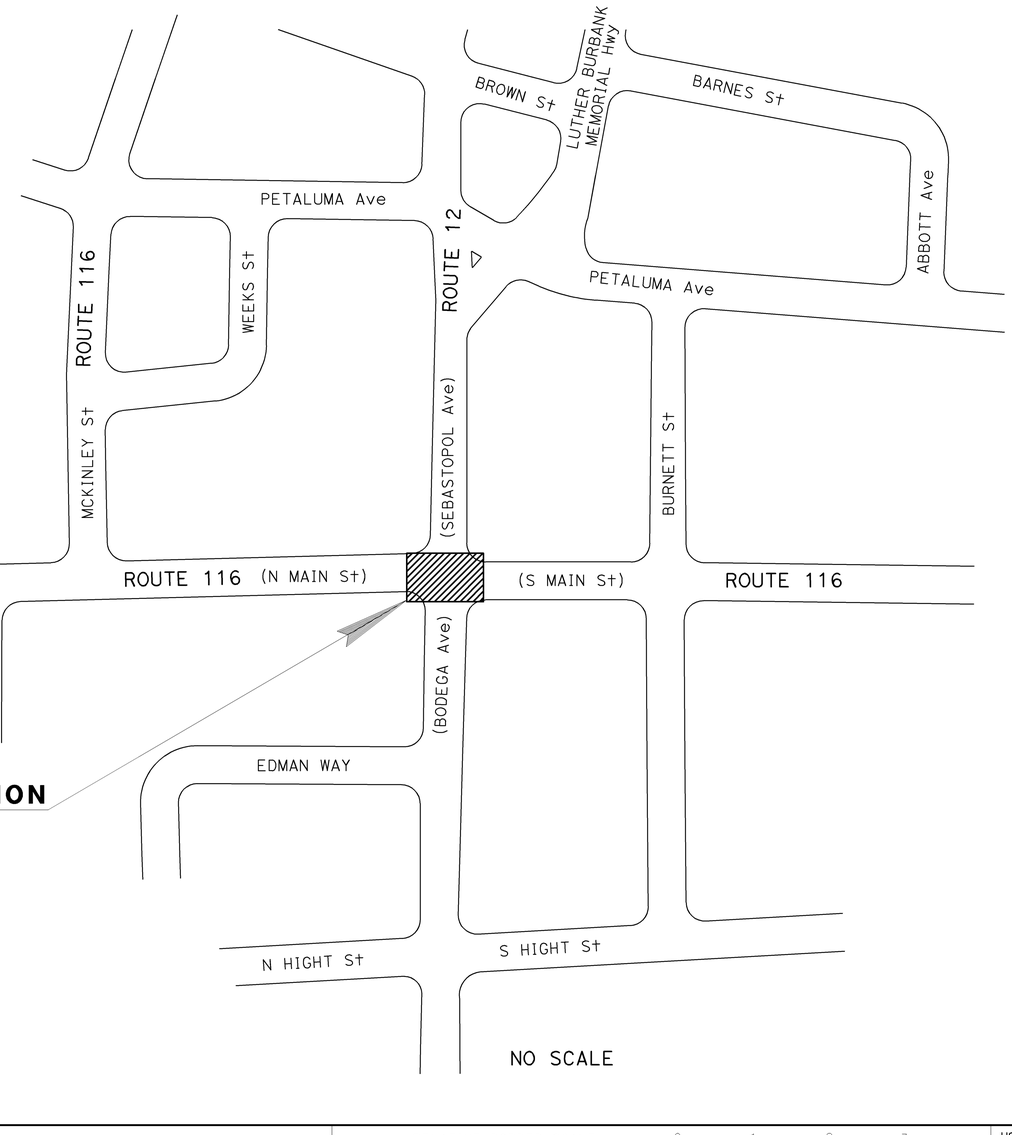

LOCATION OF CONSTRUCTION
PM 26.7 AND 9.2

LOCATION MAP

Caltrans

PROJECT MANAGER	ERIC SCHEN
DESIGN ENGINEER	MICHAEL T NGUYEN

THE CONTRACTOR SHALL POSSESS THE CLASS (OR CLASSES) OF LICENSE AS SPECIFIED IN THE "NOTICE TO BIDDERS."

Jianghong Li 2/16/10
PROJECT ENGINEER DATE
REGISTERED CIVIL ENGINEER

REGISTERED PROFESSIONAL ENGINEER — Jianghong Li — No. 71954 — Exp. 12-31-11 — CIVIL — STATE OF CALIFORNIA

February 22, 2010
PLANS APPROVAL DATE

THE STATE OF CALIFORNIA OR ITS OFFICERS OR AGENTS SHALL NOT BE RESPONSIBLE FOR THE ACCURACY OR COMPLETENESS OF SCANNED COPIES OF THIS PLAN SHEET.

CONTRACT No. 04-3A9904

LAST REVISION 02-02-10
DATE PLOTTED => 24-FEB-2010
TIME PLOTTED => 11:11

Dist	COUNTY	ROUTE	POST MILES TOTAL PROJECT	SHEET No.	TOTAL SHEETS
04	Son	116,12	26.7, 9.2	2	58

REGISTERED CIVIL ENGINEER 2/16/10 DATE

2-22-10
PLANS APPROVAL DATE

REGISTERED PROFESSIONAL ENGINEER Jianghong Li No. 71954 Exp. 12-31-11 CIVIL STATE OF CALIFORNIA

THE STATE OF CALIFORNIA OR ITS OFFICERS OR AGENTS SHALL NOT BE RESPONSIBLE FOR THE ACCURACY OR COMPLETENESS OF SCANNED COPIES OF THIS PLAN SHEET.

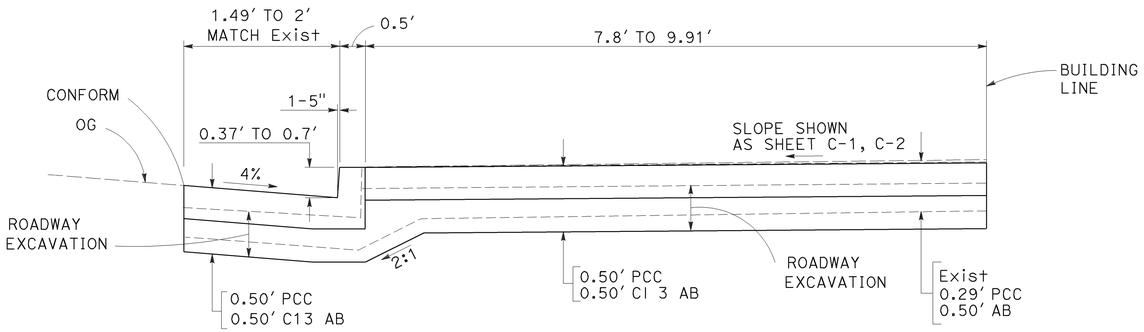

SIDEWALK AND CURB

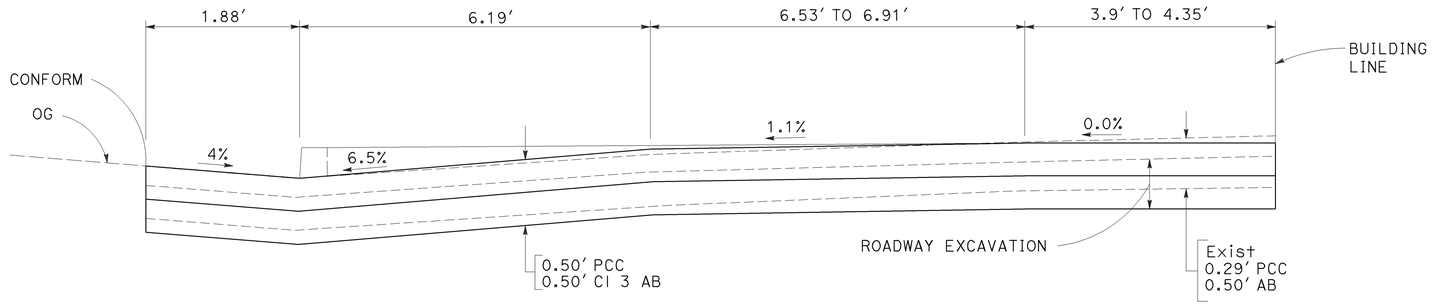

SECTION A-A

SW CORNER CURB RAMP

(SEE STANDARD PLAN A88A FOR MORE DETAILS)

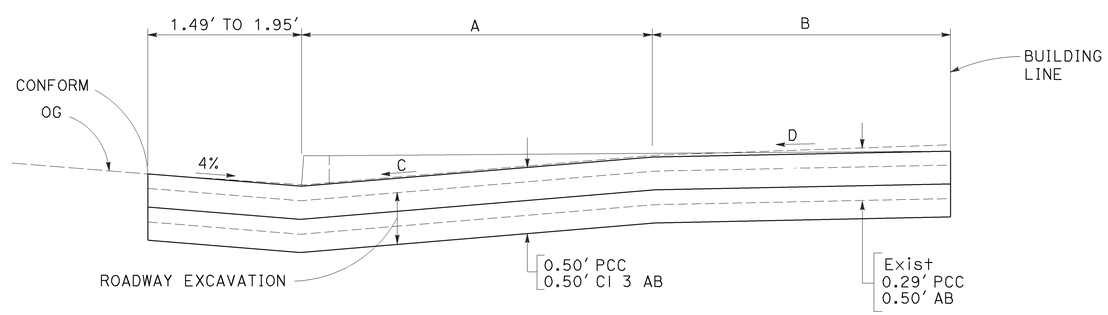

SECTION B-B

NE, NW, SE CORNER CURB RAMP

(SEE STANDARD PLAN A88A FOR MORE DETAILS)

NOTES

1. DIMENSIONS OF THE PAVEMENT STRUCTURES (STRUCTURAL SECTIONS) ARE SUBJECT TO TOLERANCES SPECIFIED IN THE STANDARD SPECIFICATIONS.
2. SECTION LINE A-A AND B-B ARE SHOWN ON SHEET L-1.
3. FOR SIDEWALK AND CURB DETAILS SEE SHEET C-1 AND C-2.

CORNER	A	B	C	D
NORTHEAST	6.26'	4.7' TO 7.15'	4%	0.5%
NORTHWEST	6.26'	4.7' TO 8.61'	6.5%	1.5%
SOUTHEAST	5.82'	4.7' TO 7.08'	6.5%	1.5%

TYPICAL CROSS SECTIONS

NO SCALE

X-1

STATE OF CALIFORNIA - DEPARTMENT OF TRANSPORTATION
Caltrans
DESIGN

FUNCTIONAL SUPERVISOR: MICHAEL T NGUYEN
CALCULATED-DESIGNED BY: JIANGHONG LI
CHECKED BY: MICHAEL T NGUYEN
REVISED BY: JHL
DATE REVISED: 2/2/10

LAST REVISION 02-11-10
DATE PLOTTED => 24-FEB-2010
TIME PLOTTED => 11:10

Dist	COUNTY	ROUTE	POST MILES TOTAL PROJECT	SHEET No.	TOTAL SHEETS
04	Son	116,12	26.7, 9.2	3	58

REGISTERED CIVIL ENGINEER — DATE 2/16/10

Jianghong Li — No. 71954 — Exp. 12-31-11 — CIVIL — REGISTERED PROFESSIONAL ENGINEER — STATE OF CALIFORNIA

2-22-10
PLANS APPROVAL DATE

THE STATE OF CALIFORNIA OR ITS OFFICERS OR AGENTS SHALL NOT BE RESPONSIBLE FOR THE ACCURACY OR COMPLETENESS OF SCANNED COPIES OF THIS PLAN SHEET.

FOR ACCURATE RIGHT OF WAY AND ACCESS DATA, CONTACT RIGHT OF WAY ENGINEERING AT THE DISTRICT OFFICE.

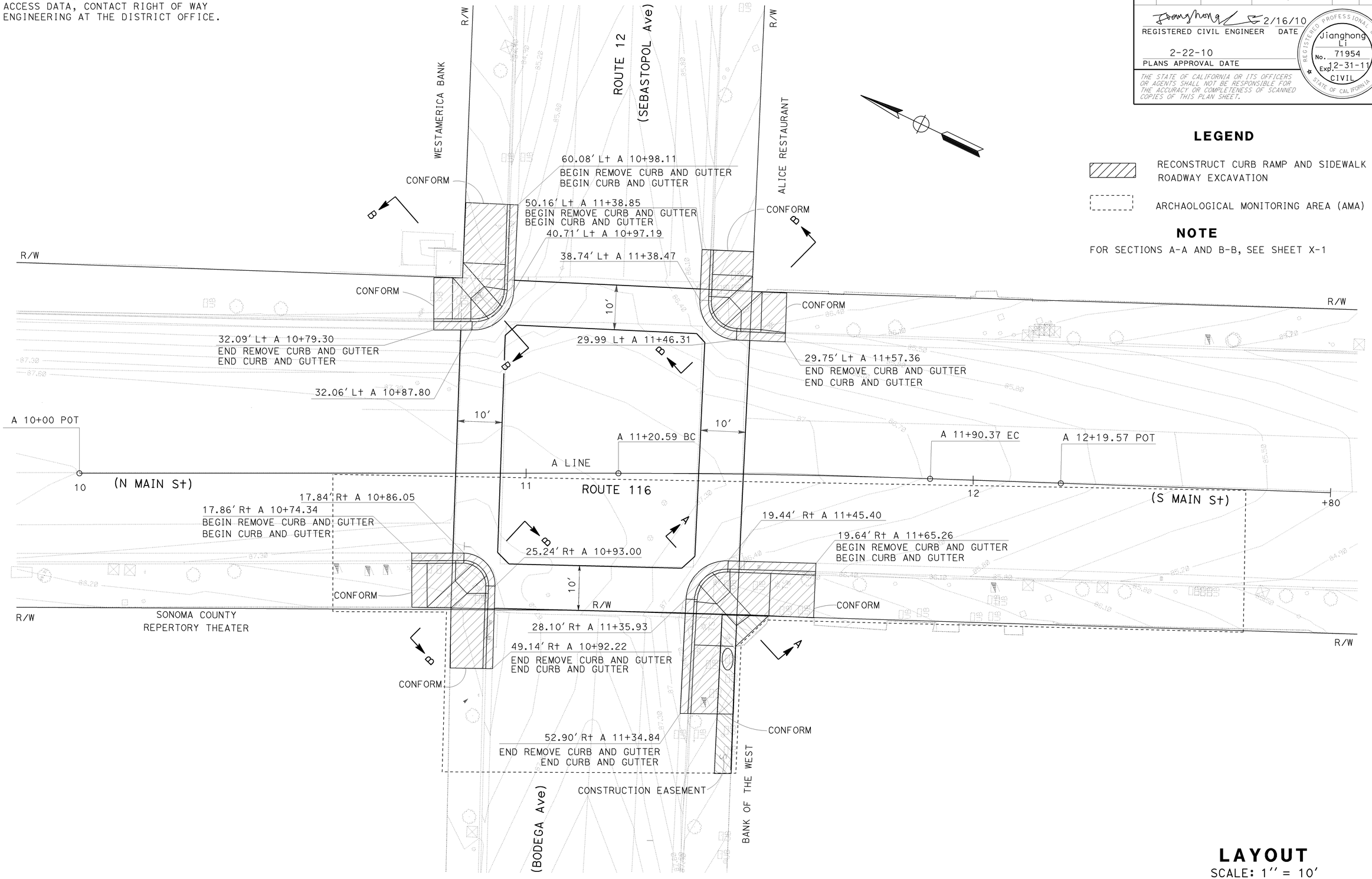

LEGEND

RECONSTRUCT CURB RAMP AND SIDEWALK
ROADWAY EXCAVATION

ARCHAOLOGICAL MONITORING AREA (AMA)

NOTE

FOR SECTIONS A-A AND B-B, SEE SHEET X-1

LAYOUT

SCALE: 1'' = 10'

L-1

CALCULATED-DESIGNED BY	JHL	REVISED BY	JIANGHONG LI
CHECKED BY	2/2/10	DATE REVISED	MICHAEL T NGUYEN

FUNCTIONAL SUPERVISOR: MICHAEL T NGUYEN

STATE OF CALIFORNIA - DEPARTMENT OF TRANSPORTATION — DESIGN

Caltrans

LAST REVISION: DATE PLOTTED => 25-FEB-2010; TIME PLOTTED => 08:39; 02-11-10

BORDER LAST REVISED 4/11/2008

RELATIVE BORDER SCALE IS IN INCHES 0 1 2 3

USERNAME => s131681
DGN FILE => 43a990ea001.dgn

CU 04223

EA 3A9901

Dist	COUNTY	ROUTE	POST MILES TOTAL PROJECT	SHEET No.	TOTAL SHEETS
04	Son	116,12	26.7, 9.2	4	58

REGISTERED CIVIL ENGINEER — DATE 2/16/10

2-22-10
PLANS APPROVAL DATE

REGISTERED PROFESSIONAL ENGINEER — Jianghong Li — No. 71954 — Exp. 12-31-11 — CIVIL — STATE OF CALIFORNIA

THE STATE OF CALIFORNIA OR ITS OFFICERS OR AGENTS SHALL NOT BE RESPONSIBLE FOR THE ACCURACY OR COMPLETENESS OF SCANNED COPIES OF THIS PLAN SHEET.

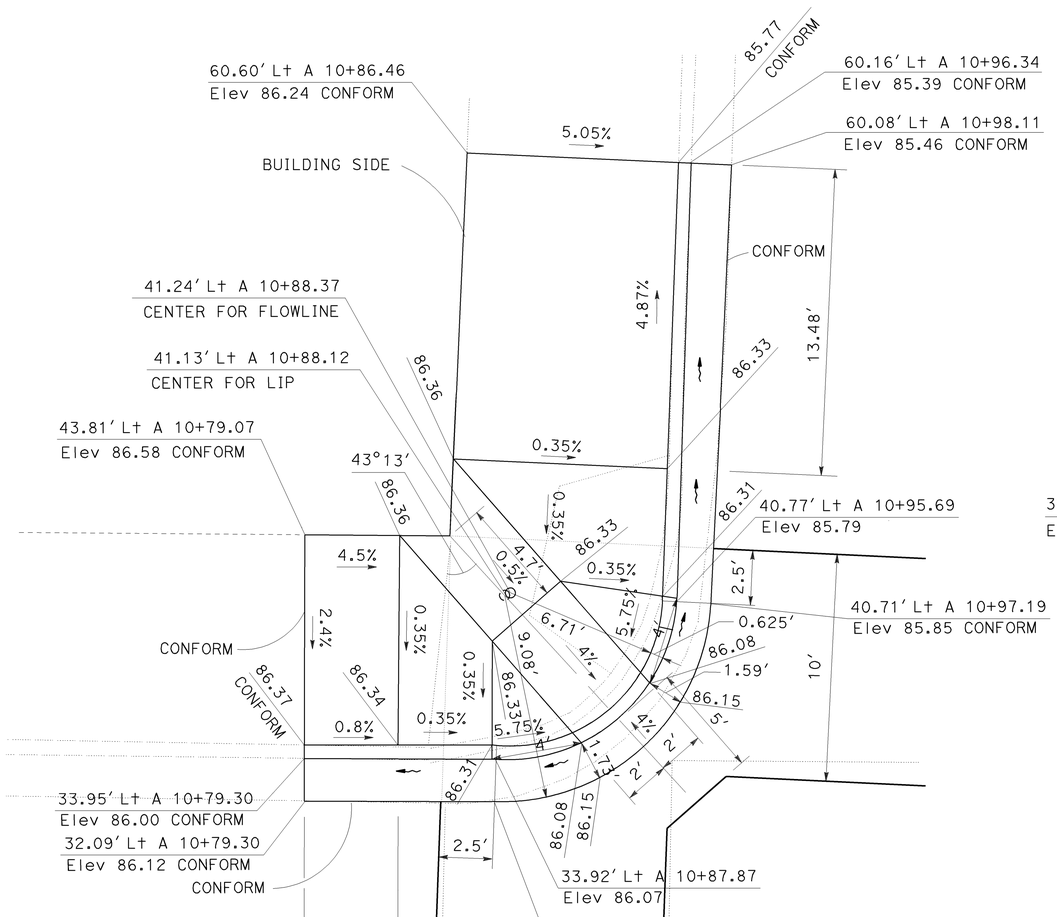

NORTHEAST CORNER

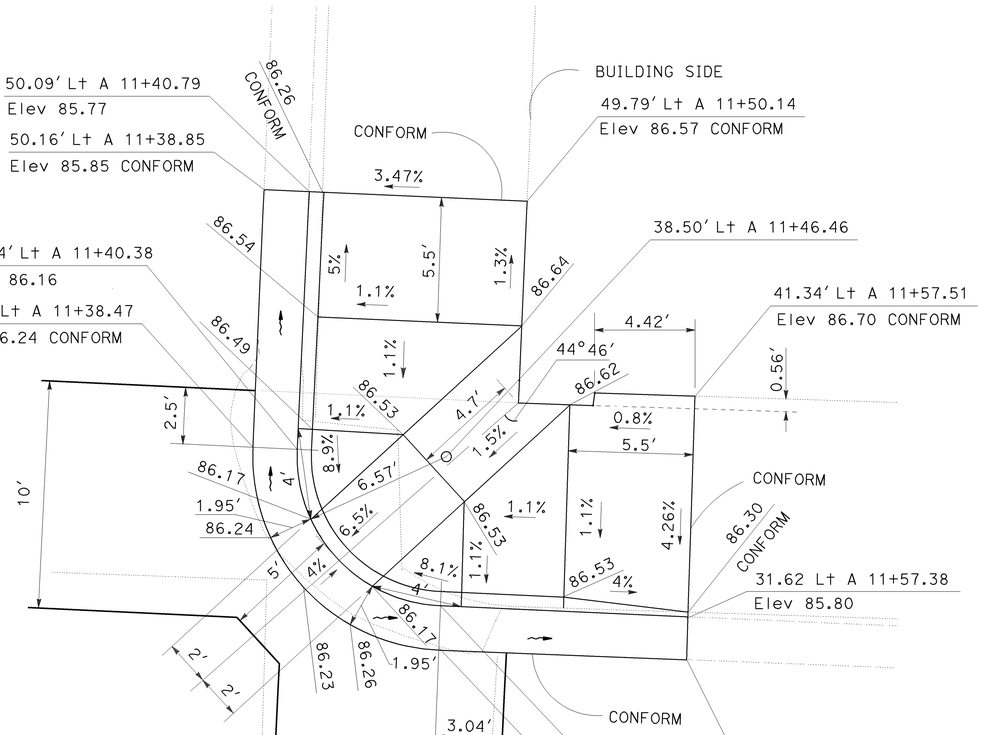

SOUTHEAST CORNER

CURB RAMP DETAILS

CONSTRUCTION DETAILS

NO SCALE

C-1

STATE OF CALIFORNIA - DEPARTMENT OF TRANSPORTATION
DESIGN
FUNCTIONAL SUPERVISOR: MICHAEL T NGUYEN
CALCULATED-DESIGNED BY: JIANGHONG LI
CHECKED BY: MICHAEL T NGUYEN
REVISED BY: JHL
DATE REVISED: 2/11/10

LAST REVISION DATE PLOTTED => 24-FEB-2010
LAST REVISION TIME PLOTTED => 11:09
02-11-10

BORDER LAST REVISED 4/11/2008

RELATIVE BORDER SCALE IS IN INCHES 0 1 2 3

USERNAME => s131681
DGN FILE => 43a990ga001.dgn

CU 04223

EA 3A9901

Dist	COUNTY	ROUTE	POST MILES TOTAL PROJECT	SHEET No.	TOTAL SHEETS
04	Son	116,12	26.7, 9.2	5	58

REGISTERED CIVIL ENGINEER — DATE 2/16/10

Jianghong Li No. 71954 Exp. 12-31-11 CIVIL — REGISTERED PROFESSIONAL ENGINEER — STATE OF CALIFORNIA

2-22-10
PLANS APPROVAL DATE

THE STATE OF CALIFORNIA OR ITS OFFICERS OR AGENTS SHALL NOT BE RESPONSIBLE FOR THE ACCURACY OR COMPLETENESS OF SCANNED COPIES OF THIS PLAN SHEET.

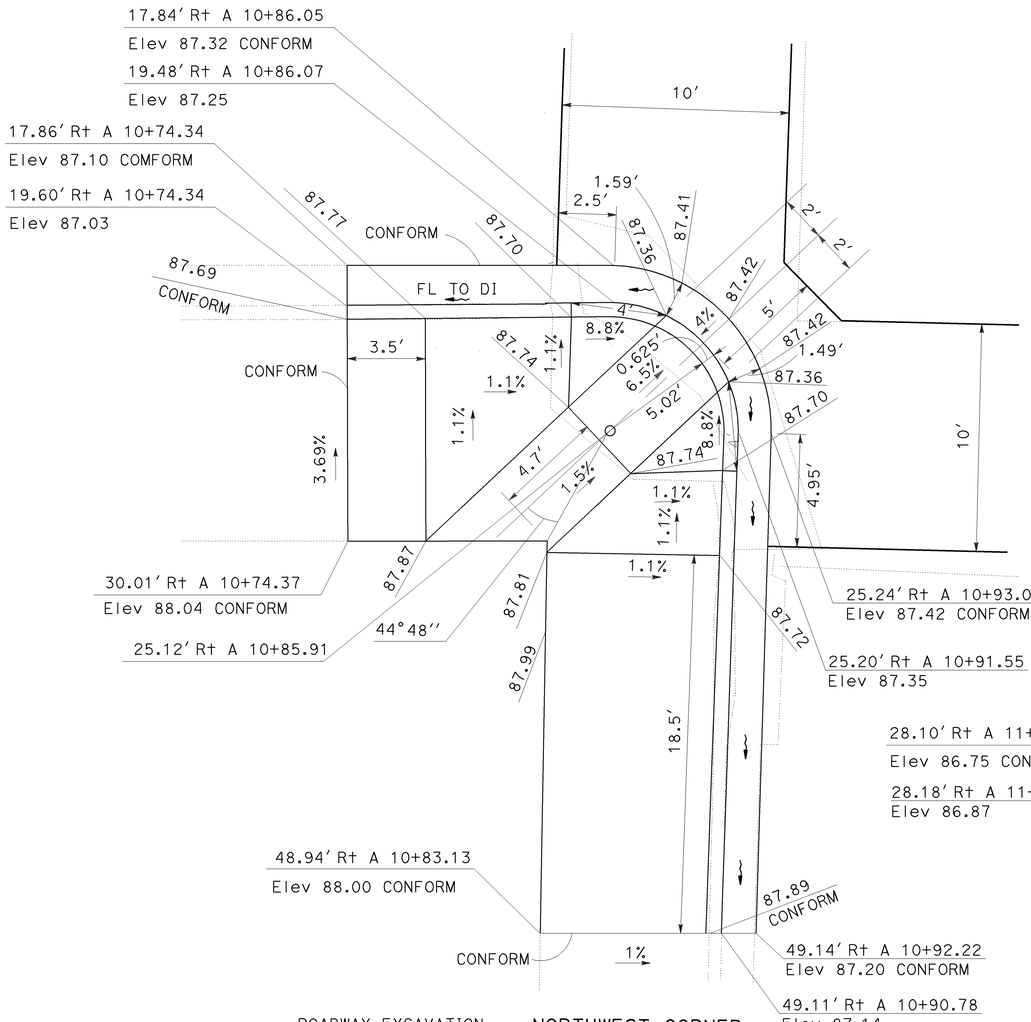

NORTHWEST CORNER

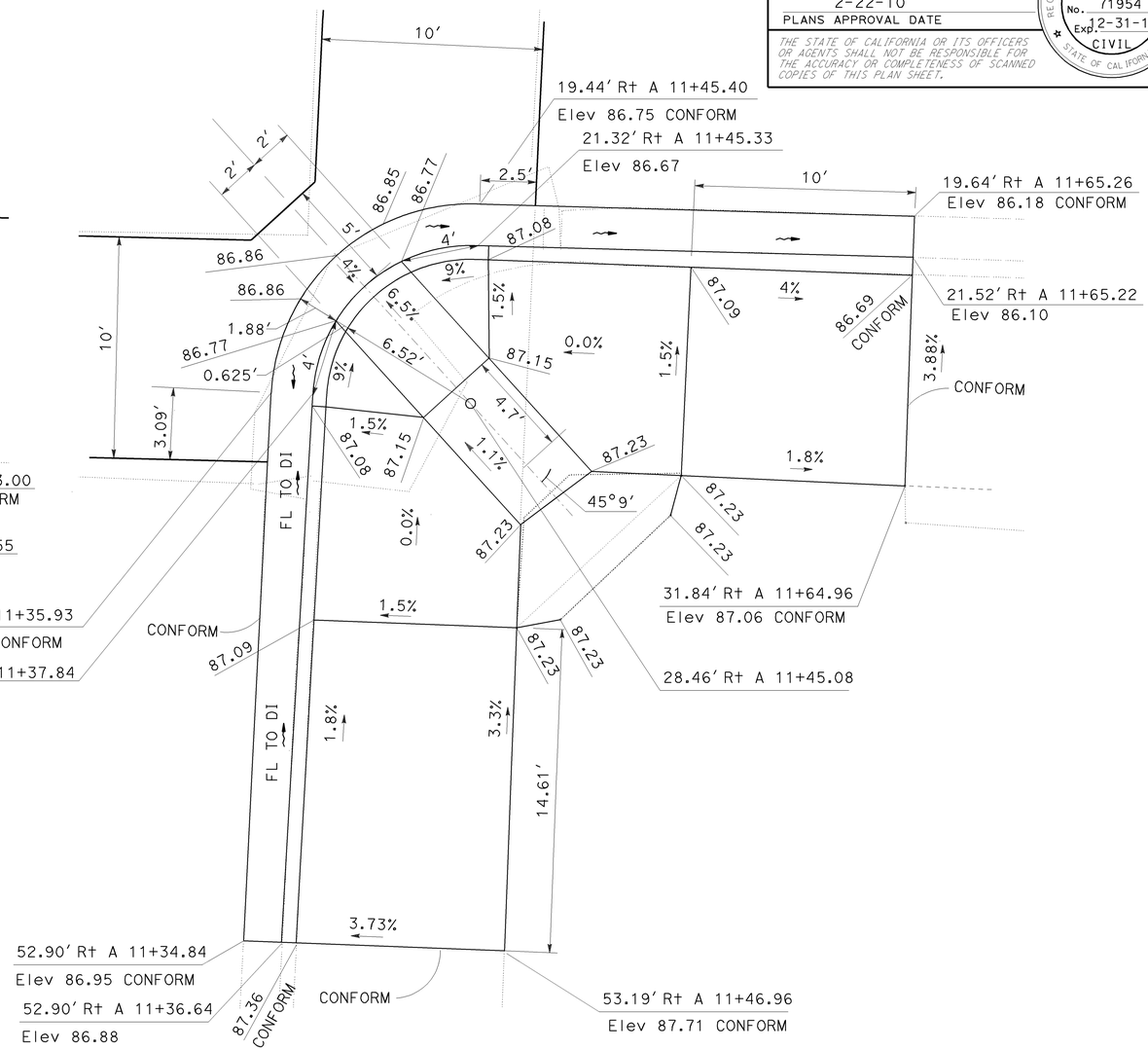

SOUTHWEST CORNER

CURB RAMP DETAILS

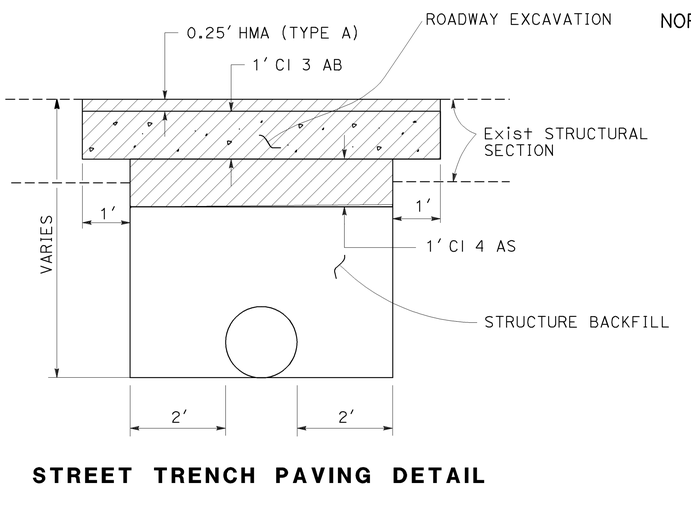

STREET TRENCH PAVING DETAIL

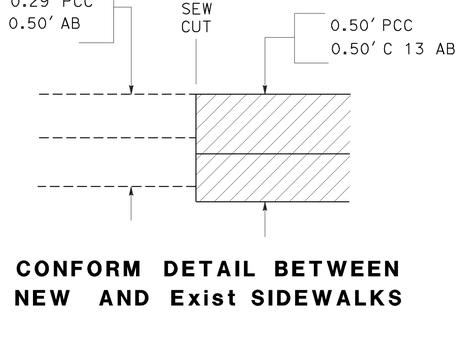

CONFORM DETAIL BETWEEN NEW AND Exist SIDEWALKS

FOR NOTES, ABBREVIATIONS &/OR LEGEND, SEE SHEET C-1

CONSTRUCTION DETAILS

NO SCALE

C-2

STATE OF CALIFORNIA - DEPARTMENT OF TRANSPORTATION — DESIGN

FUNCTIONAL SUPERVISOR: MICHAEL T NGUYEN

CALCULATED-DESIGNED BY	CHECKED BY	REVISED BY	DATE REVISED
JIANGHONG LI	MICHAEL T NGUYEN	JHL	2/16/10

LAST REVISION 02-16-10 — DATE PLOTTED => 24-FEB-2010 — TIME PLOTTED => 11:08

FOR ACCURATE RIGHT OF WAY AND
ACCESS DATA, CONTACT RIGHT OF WAY
ENGINEERING AT THE DISTRICT OFFICE.

LEGEND

- X — DRAINAGE SYSTEM No.
- ○ — DRAINAGE UNIT
- [---] — EXCAVATION USE HAND METHOD WITHOUT POWER EQUIPMENT

Dist	COUNTY	ROUTE	POST MILES TOTAL PROJECT	SHEET No.	TOTAL SHEETS
04	Son	116,12	26.7, 9.2	6	58

Jianghong Li 2/16/10
REGISTERED CIVIL ENGINEER DATE

2-22-10
PLANS APPROVAL DATE

REGISTERED PROFESSIONAL ENGINEER — Jianghong Li — No. 71954 — Exp. 12-31-11 — CIVIL — STATE OF CALIFORNIA

THE STATE OF CALIFORNIA OR ITS OFFICERS OR AGENTS SHALL NOT BE RESPONSIBLE FOR THE ACCURACY OR COMPLETENESS OF SCANNED COPIES OF THIS PLAN SHEET.

NOTE

EXCAVATION REQUIRED TO CONSTRUCT DRAINAGE PIPES AND INLETS AS SHOWN ON THE PLAN SHALL BE PERFORMED BY HAND METHODS WITHOUT THE USE OF POWER EQUIPMENT.

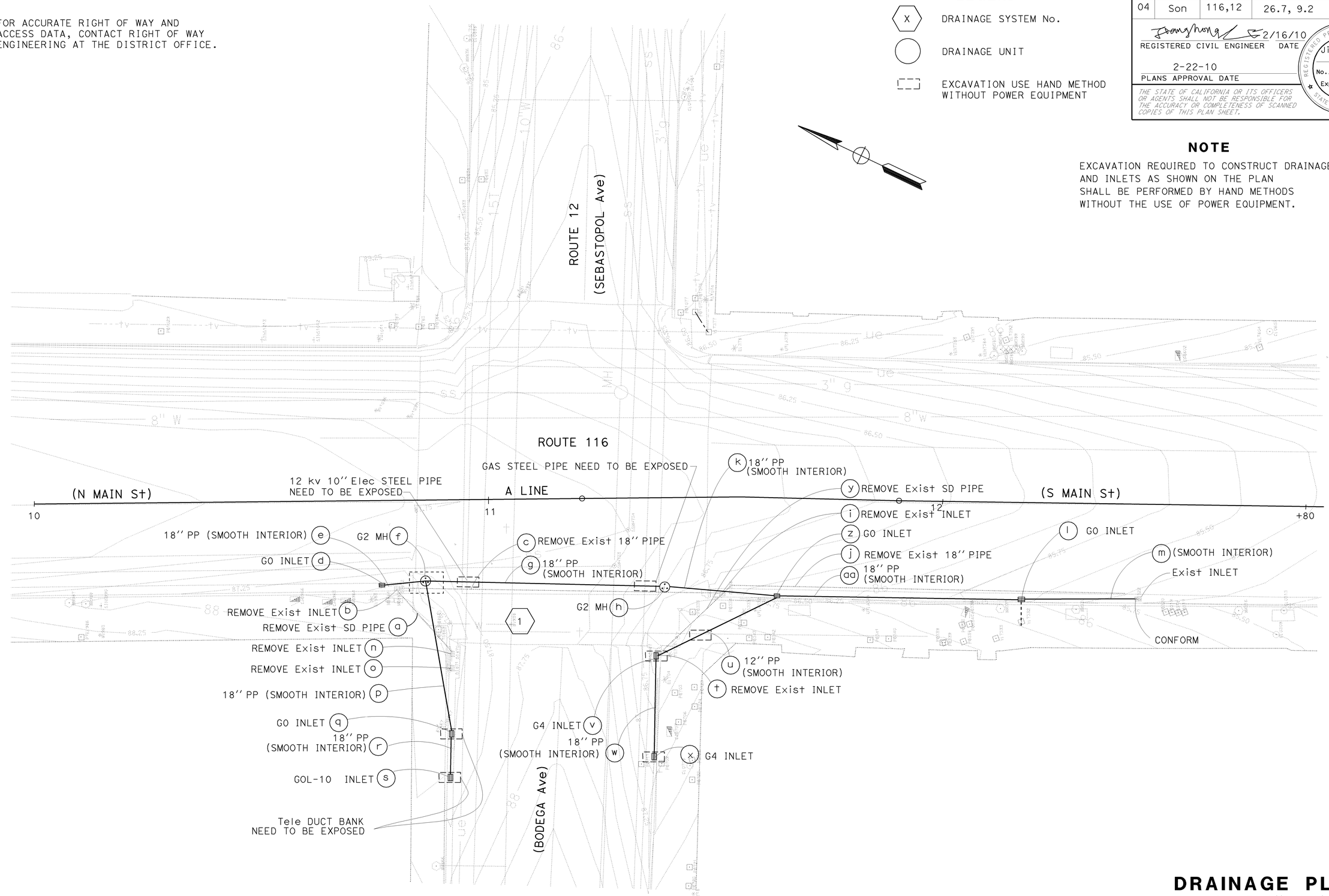

DRAINAGE PLAN

SCALE: 1'' = 10'

THIS PLAN ACCURATE FOR DRANAGE WORK ONLY

D-1

CALCULATED-DESIGNED BY	REVISED BY	DATE REVISED
JIANGHONG LI	JHL	2/2/10
CHECKED BY	FUNCTIONAL SUPERVISOR	
MICHAEL T NGUYEN	MICHAEL T NGUYEN	

STATE OF CALIFORNIA - DEPARTMENT OF TRANSPORTATION
DESIGN

LAST REVISION 02-02-10
DATE PLOTTED => 24-FEB-2010
TIME PLOTTED => 11:08

BORDER LAST REVISED 4/11/2008
RELATIVE BORDER SCALE IS IN INCHES 0 1 2 3
USERNAME => s131681
DGN FILE => 43a990ia001.dgn
CU 04223
EA 3A9901

Dist	COUNTY	ROUTE	POST MILES TOTAL PROJECT	SHEET No.	TOTAL SHEETS
04	Son	116,12	26.7, 9.2	7	58

REGISTERED CIVIL ENGINEER 2/16/10 DATE

2-22-10
PLANS APPROVAL DATE

REGISTERED PROFESSIONAL ENGINEER Jianghong Li No. 71954 Exp. 12-31-11 CIVIL STATE OF CALIFORNIA

THE STATE OF CALIFORNIA OR ITS OFFICERS OR AGENTS SHALL NOT BE RESPONSIBLE FOR THE ACCURACY OR COMPLETENESS OF SCANNED COPIES OF THIS PLAN SHEET.

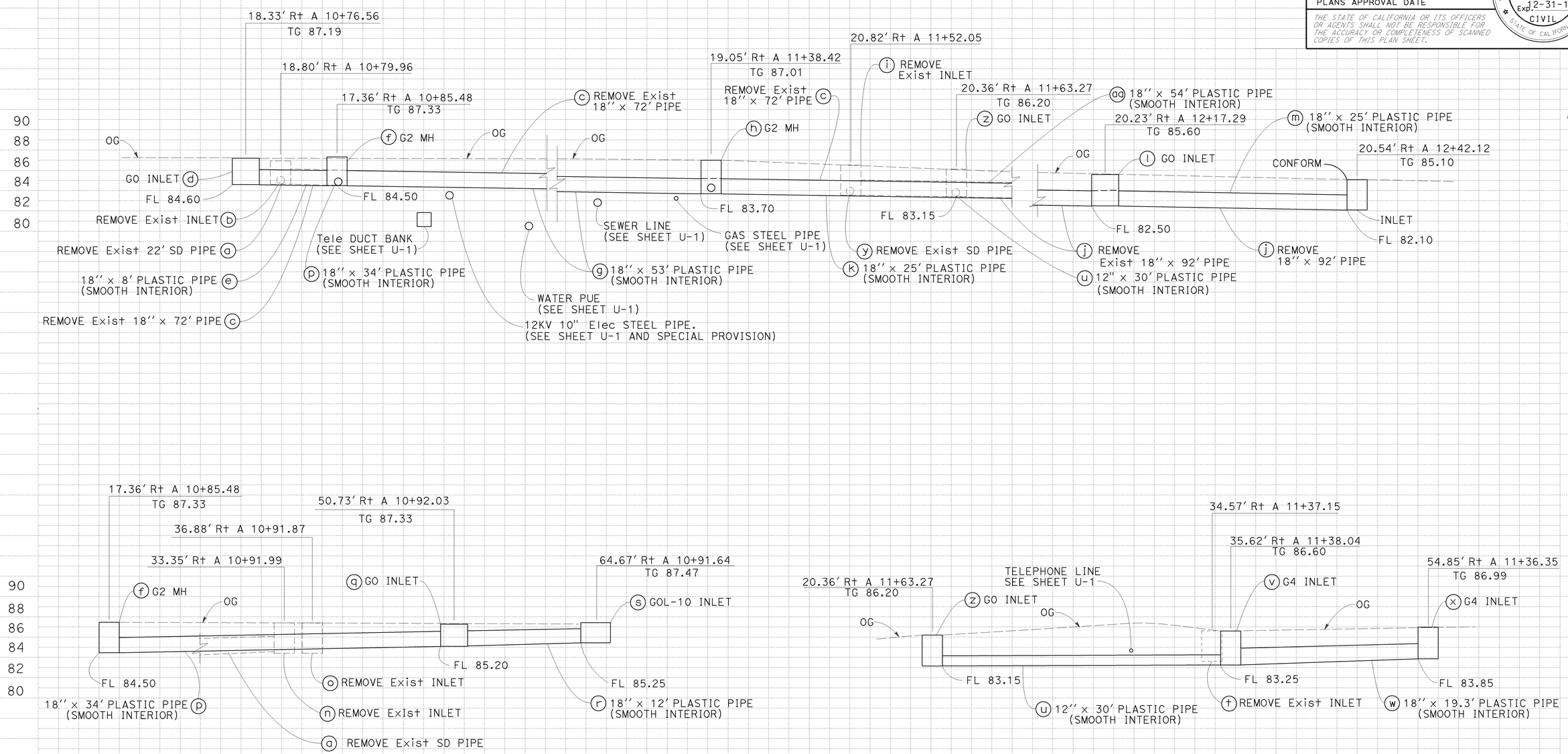

DRAINAGE SYSTEM No. 1

DRAINAGE PROFILES

SCALE: HORIZ 1'' = 5'
VERT 1'' = 5'

DP-1

STATE OF CALIFORNIA - DEPARTMENT OF TRANSPORTATION
Caltrans
DESIGN

FUNCTIONAL SUPERVISOR: MICHAEL T NGUYEN
CALCULATED-DESIGNED BY: JIANGHONG LI
CHECKED BY: MICHAEL T NGUYEN
REVISED BY: JHL
DATE REVISED: 2/2/10

LAST REVISION 02-02-10
DATE PLOTTED => 24-FEB-2010
TIME PLOTTED => 11:07

Dist	COUNTY	ROUTE	POST MILES TOTAL PROJECT	SHEET No.	TOTAL SHEETS
04	Son	116,12	26.7, 9.2	8	58

REGISTERED CIVIL ENGINEER — DATE 2/16/10

Jianghong Li
No. 71954
Exp. 12-31-11
CIVIL
REGISTERED PROFESSIONAL ENGINEER
STATE OF CALIFORNIA

2-22-10
PLANS APPROVAL DATE

THE STATE OF CALIFORNIA OR ITS OFFICERS OR AGENTS SHALL NOT BE RESPONSIBLE FOR THE ACCURACY OR COMPLETENESS OF SCANNED COPIES OF THIS PLAN SHEET.

NOTE

FOR DETAILS NOT SHOWN, SEE Std PLAN D73 - G2 INLET.

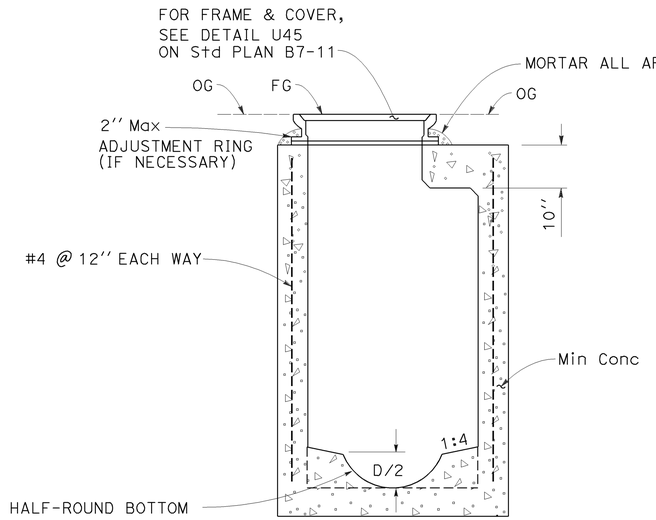

SECTION A-A

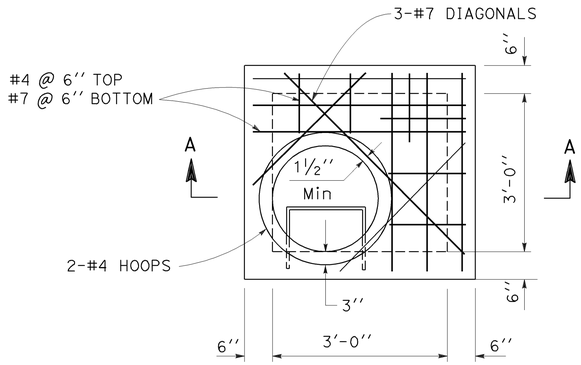

PLAN

G2 MANHOLE

DRAINAGE DETAILS

NO SCALE

DD-1

STATE OF CALIFORNIA - DEPARTMENT OF TRANSPORTATION
DESIGN

FUNCTIONAL SUPERVISOR: MICHAEL T NGUYEN

CALCULATED-DESIGNED BY: JIANGHONG LI
CHECKED BY: MICHAEL T NGUYEN

REVISED BY: JHL
DATE REVISED: 2/2/10

LAST REVISION DATE PLOTTED => 24-FEB-2010
TIME PLOTTED => 11:07

BORDER LAST REVISED 4/11/2008

RELATIVE BORDER SCALE IS IN INCHES 0 1 2 3

USERNAME => s131681
DGN FILE => 43a990ic001.dgn

CU 04223

EA 3A9901

Dist	COUNTY	ROUTE	POST MILES TOTAL PROJECT	SHEET No.	TOTAL SHEETS
04	Son	116,12	26.7, 9.2	9	58

REGISTERED CIVIL ENGINEER — DATE 2/16/10

Jianghong Li — No. 71954 — Exp. 12-31-11 — CIVIL — REGISTERED PROFESSIONAL ENGINEER — STATE OF CALIFORNIA

2-22-10
PLANS APPROVAL DATE

THE STATE OF CALIFORNIA OR ITS OFFICERS OR AGENTS SHALL NOT BE RESPONSIBLE FOR THE ACCURACY OR COMPLETENESS OF SCANNED COPIES OF THIS PLAN SHEET.

DRAINAGE QUANTITIES

DRAINAGE SYSTEM No.	DRAINAGE UNIT	REMOVE INLET (EA)	REMOVE PIPE (LF)	DRAINAGE INLET GO w/ 24-12X (N) (EA)	G2 MH (N) (EA)	GOL-10 w/ 24-12X (N) (EA)	G4 w/ 18-9X (EA)	HEIGHT OF INLET (N) (Ft)	TYPE 24-12X GRATE (N) (EA)	TYPE 18-9X GRATE (N) (EA)	MINOR STRUCTURE MINOR CONCRETE (CY)	BAR REINFORCING STEEL (LB)	MISCELLANEOUS IRON & STEEL (LB)	18'' PLASTIC PIPE (SMOOTH INTERIOR) (LF)	12'' PLASTIC PIPE (SMOOTH INTERIOR) (LF)	DRAINAGE INLET MARKER (EA)	DRAINAGE INLET PROTECTION (EA)	DESCRIPTION	STATION	DRAINAGE PLAN SHEET No.	DRAINAGE SYSTEM No.	DRAINAGE UNIT
1	a		22															REMOVE Exist SD PIPE	18.80' Rt A 10+79.96 TO 33.35' Rt A 10+91.99	D-1	1	a
	b	1																REMOVE Exist INLET	18.80' Rt A 10+79.96			b
	c		72															REMOVE Exist 18'' PIPE	18.80' Rt A 10+79.96 TO 20.82' Rt A 11+52.05			c
	d			1				2.59	1		1.14		326			1	1	GO INLET	18.33' Rt A 10+76.56			d
	e													8				18'' PLASTIC PIPE (SMOOTH INTERIOR)	18.33' Rt A 10+76.56 TO 17.36' Rt A 10+85.48			e
	f				1			2.83	1		1.27		326					G2 MANHOLE	17.36' Rt A 10+85.48			f
	g													53				18'' PLASTIC PIPE (SMOOTH INTERIOR)	17.36' Rt A 10+85.48 TO 19.05' Rt A 11+38.42			g
	h				1			3.31	1		1.39		326					G2 MANHOLE	19.05' Rt A 11+38.42			h
	i	1																REMOVE Exist INLET	20.82' Rt A 11+52.05			i
	j		92															REMOVE Exist 18'' PIPE	20.82' Rt A 11+52.05 TO 20.54' Rt A 12+42.12			j
	k													25				18'' PLASTIC PIPE (SMOOTH INTERIOR)	19.05' Rt A 11+38.42 TO 20.36' Rt A 11+63.27			k
	l			1				3.1	1		1.27		326			1	1	GO INLET	20.23' Rt A 12+17.29			l
	m													25				18'' PLASTIC PIPE (SMOOTH INTERIOR)	20.23' Rt A 12+17.29 TO 20.54' Rt A 12+42.12			m
	n	1																REMOVE Exist INLET	33.35' Rt A 10+91.99			n
	o	1																REMOVE Exist INLET	36.88' Rt A 10+91.87			o
	p													34				18'' PLASTIC PIPE (SMOOTH INTERIOR)	17.36' Rt A 10+85.48 TO 50.73' Rt A 10+92.03			p
	q			1				2.13	1		1.14		326			1	1	GO INLET	50.73' Rt A 10+92.03			q
	r													12				18'' PLASTIC PIPE (SMOOTH INTERIOR)	50.73' Rt A 10+92.03 TO 64.67' Rt A 10+91.64			r
	s					1		2.22	1		2.75		326			1	1	GOL-10 INLET	64.67' Rt A 10+91.64			s
	t	1																REMOVE Exist INLET	34.57' Rt A 11+37.15			t
	u														30			12'' PLASTIC PIPE (SMOOTH INTERIOR)	20.36' Rt A 11+63.27 TO 35.62' Rt A 11+38.04			u
	v						1	3.35		1	1.39		249			1	1	G4 INLET	35.62' Rt A 11+38.04			v
	w													19.3				18'' PLASTIC PIPE (SMOOTH INTERIOR)	35.62' Rt A 11+38.04 TO 54.58' Rt A 11+36.35			w
	x						1	3.14		1	1.33		249			1	1	G4 INLET	54.58' Rt A 11+36.35			x
	y		22															REMOVE Exist SD PIPE	34.57' Rt A 11+37.50 TO 18.76' Rt A 11+54.00			y
	z			1				3.05	1		1.27		326			1	1	GO INLET	20.36' Rt A 11+63.27			z
	aa													54				18'' PLASTIC PIPE (SMOOTH INTERIOR)	20.36' Rt A 11+63.27 TO 20.23' Rt A 12+17.29			aa
SHEET TOTAL		5	208	4	2	1	2		7	2	12.95	0	2780	230.3	30	7	7	SHEET TOTAL				

(N) = NOT A SEPARATE PAY ITEM. FOR INFORMATION ONLY

DRAINAGE QUANTITIES DQ-1

STATE OF CALIFORNIA - DEPARTMENT OF TRANSPORTATION
HYDRAULICS
Caltrans

FUNCTIONAL SUPERVISOR: MICHAEL T NGUYEN
CALCULATED-DESIGNED BY: JIANGHONG LI
CHECKED BY: MICHAEL T NGUYEN
REVISED BY: JHL
DATE REVISED: 2/2/10

LAST REVISION DATE PLOTTED => 24-FEB-2010
TIME PLOTTED => 11:06
02-01-10

BORDER LAST REVISED 4/11/2008
RELATIVE BORDER SCALE IS IN INCHES 0 1 2 3
USERNAME => s131681
DGN FILE => 43a9901d001.dgn
CU 04223
EA 3A9901

Dist	COUNTY	ROUTE	POST MILES TOTAL PROJECT	SHEET No.	TOTAL SHEETS
04	Son	116,12	26.7, 9.2	10	58

REGISTERED CIVIL ENGINEER — DATE 2/16/10

2-22-10
PLANS APPROVAL DATE

REGISTERED PROFESSIONAL ENGINEER — Jianghong Li — No. 71954 — Exp. 12-31-11 — CIVIL — STATE OF CALIFORNIA

THE STATE OF CALIFORNIA OR ITS OFFICERS OR AGENTS SHALL NOT BE RESPONSIBLE FOR THE ACCURACY OR COMPLETENESS OF SCANNED COPIES OF THIS PLAN SHEET.

FOR ACCURATE RIGHT OF WAY AND ACCESS DATA, CONTACT RIGHT OF WAY ENGINEERING AT THE DISTRICT OFFICE.

NOTES

1. LOCATIONS OF UTILITY FACILITIES SHOWN ON THESE PLANS ARE APPROXIMATE AND SHALL BE VERIFIED BY THE CONTRACTOR PRIOR TO CONSTRUCTION.
2. UTILITY OWNERSHIP ON THIS PROJECT.
   GAS- PACIFIC GAS AND ELECTRIC COMPANY (PG&E)
   ELECTRIC- PG&E
   WATER- SONOMA COUNTY WATER AGENCY (SCWA)
   TELEPHONE- AMERICAN TELEPHONE AND TELEGRAPH (AT&T)
   SEWER- CITY OF SEBASTOPOL
   STORM DRAINAGE- CITY OF SEBASTOPOL
3. ALL ELEVATIONS SHOWN REFER TO THE TOP OF PIPE ELEVATION UNLESS OTHERWISE INDICATED.
4. THIS PLAN ACCURATE FOR UTILITIES ONLY.

LEGEND

UTILITY	EXISTING UTILITY
ELECTRIC	-e——— ———-e—
GASLINE	-gs——— ———gs-
CABLE TELEVISION	-tv——— ———tv-
WATERLINE	-w——— ———w-
TELEPHONE	-t——— ———t-
STROM DRAIN	sd——— ———sd-
SANITARY SEWER	--s——— ———s-

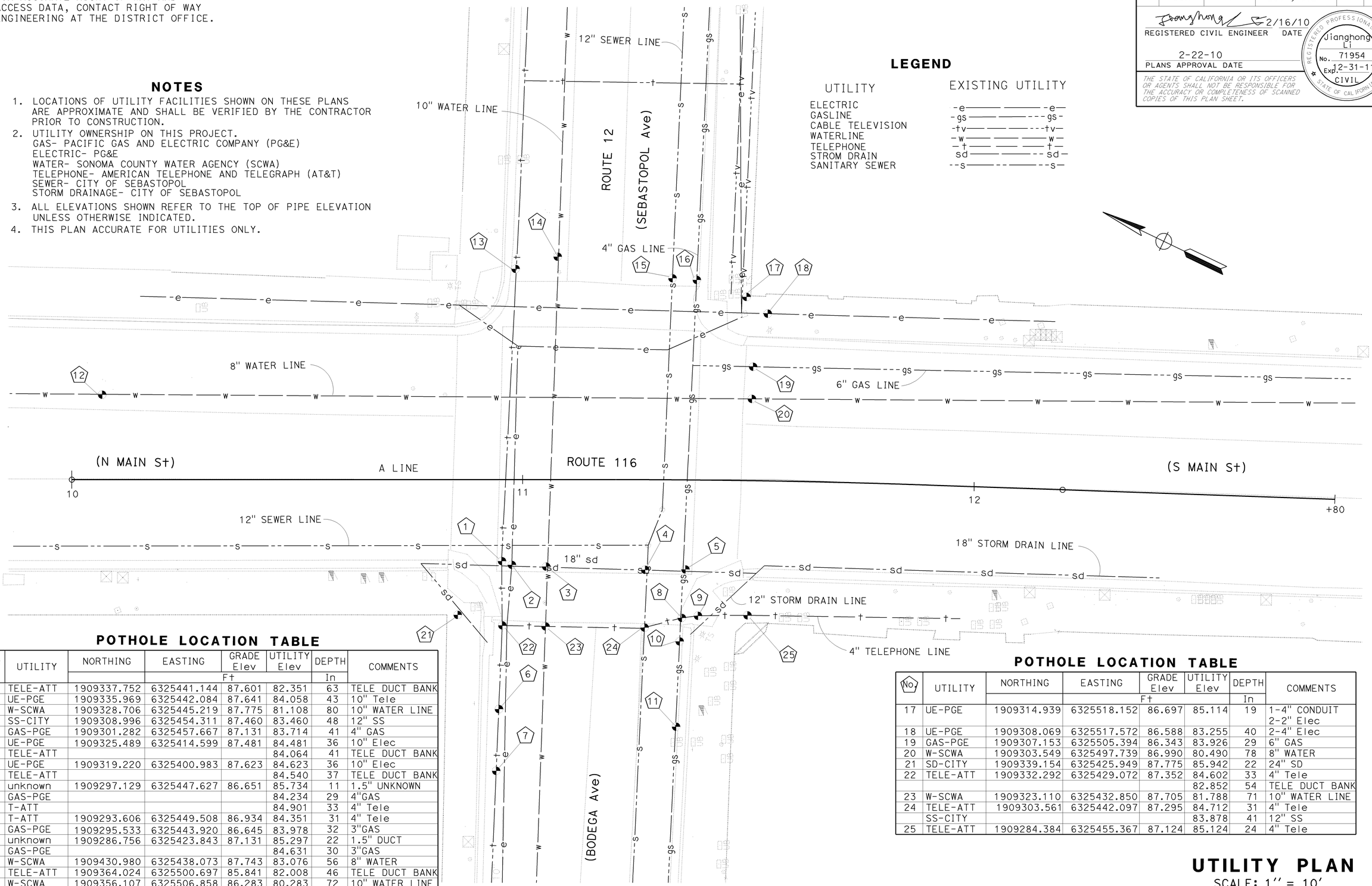

POTHOLE LOCATION TABLE

No.	UTILITY	NORTHING	EASTING	GRADE Elev	UTILITY Elev	DEPTH	COMMENTS
			Ft			In	
1	TELE-ATT	1909337.752	6325441.144	87.601	82.351	63	TELE DUCT BANK
2	UE-PGE	1909335.969	6325442.084	87.641	84.058	43	10" Tele
3	W-SCWA	1909328.706	6325445.219	87.775	81.108	80	10" WATER LINE
4	SS-CITY	1909308.996	6325454.311	87.460	83.460	48	12" SS
5	GAS-PGE	1909301.282	6325457.667	87.131	83.714	41	4" GAS
6	UE-PGE	1909325.489	6325414.599	87.481	84.481	36	10" Elec
	TELE-ATT				84.064	41	TELE DUCT BANK
7	UE-PGE	1909319.220	6325400.983	87.623	84.623	36	10" Elec
	TELE-ATT				84.540	37	TELE DUCT BANK
8	unknown	1909297.129	6325447.627	86.651	85.734	11	1.5" UNKNOWN
	GAS-PGE				84.234	29	4"GAS
	T-ATT				84.901	33	4" Tele
9	T-ATT	1909293.606	6325449.508	86.934	84.351	31	4" Tele
10	GAS-PGE	1909295.533	6325443.920	86.645	83.978	32	3"GAS
11	unknown	1909286.756	6325423.843	87.131	85.297	22	1.5" DUCT
	GAS-PGE				84.631	30	3"GAS
12	W-SCWA	1909430.980	6325438.073	87.743	83.076	56	8" WATER
13	TELE-ATT	1909364.024	6325500.697	85.841	82.008	46	TELE DUCT BANK
14	W-SCWA	1909356.107	6325506.858	86.283	80.283	72	10" WATER LINE
15	SS-CITY	1909332.254	6325514.303	86.382	78.382	96	12" SS
16	GAS-PGE	1909326.770	6325516.724	86.011	83.761	27	4"GAS

POTHOLE LOCATION TABLE

No.	UTILITY	NORTHING	EASTING	GRADE Elev	UTILITY Elev	DEPTH	COMMENTS
			Ft			In	
17	UE-PGE	1909314.939	6325518.152	86.697	85.114	19	1-4" CONDUIT 2-2" Elec
18	UE-PGE	1909308.069	6325517.572	86.588	83.255	40	2-4" Elec
19	GAS-PGE	1909307.153	6325505.394	86.343	83.926	29	6" GAS
20	W-SCWA	1909303.549	6325497.739	86.990	80.490	78	8" WATER
21	SD-CITY	1909339.154	6325425.949	87.775	85.942	22	24" SD
22	TELE-ATT	1909332.292	6325429.072	87.352	84.602	33	4" Tele
					82.852	54	TELE DUCT BANK
23	W-SCWA	1909323.110	6325432.850	87.705	81.788	71	10" WATER LINE
24	TELE-ATT	1909303.561	6325442.097	87.295	84.712	31	4" Tele
	SS-CITY				83.878	41	12" SS
25	TELE-ATT	1909284.384	6325455.367	87.124	85.124	24	4" Tele

UTILITY PLAN

SCALE: 1'' = 10'

THIS PLAN ACCURATE FOR UTILITY INFORMATION ONLY

U-1

CALCULATED-DESIGNED BY	CHECKED BY	FUNCTIONAL SUPERVISOR	REVISED BY	DATE REVISED
JIANGHONG LI	MICHAEL T NGUYEN	MICHAEL T NGUYEN	JHL	2/2/10

STATE OF CALIFORNIA - DEPARTMENT OF TRANSPORTATION — DESIGN

LAST REVISION | DATE PLOTTED => 24-FEB-2010 | TIME PLOTTED => 11:05 | 01-28-10

BORDER LAST REVISED 4/11/2008 | RELATIVE BORDER SCALE IS IN INCHES 0 1 2 3 | USERNAME => s131681 | DGN FILE => 43a990ka001.dgn | CU 04223 | EA 3A9901

Dist	COUNTY	ROUTE	POST MILES TOTAL PROJECT	SHEET No.	TOTAL SHEETS
04	Son	116,12	26.7, 9.2	11	58

REGISTERED CIVIL ENGINEER — 2/16/10 DATE

Jerilyn L. Struven, No. 49964, Exp. 12-31-10, CIVIL, REGISTERED PROFESSIONAL ENGINEER, STATE OF CALIFORNIA

2-22-10
PLANS APPROVAL DATE

THE STATE OF CALIFORNIA OR ITS OFFICERS OR AGENTS SHALL NOT BE RESPONSIBLE FOR THE ACCURACY OR COMPLETENESS OF SCANNED COPIES OF THIS PLAN SHEET.

STATIONARY MOUNTED CONSTRUCTION AREA SIGNS

SIGN No.	MUTCD CODE	MESSAGE	PANEL SIZE	NUMBER OF POST AND SIZE	No. OF SIGNS
A	W20-1	ROAD WORK AHEAD	36'' x 36''	(ONE) 4'' x 6''	4
B	G20-2	END ROAD WORK	38'' x 18''	(ONE) 4'' x 4''	4

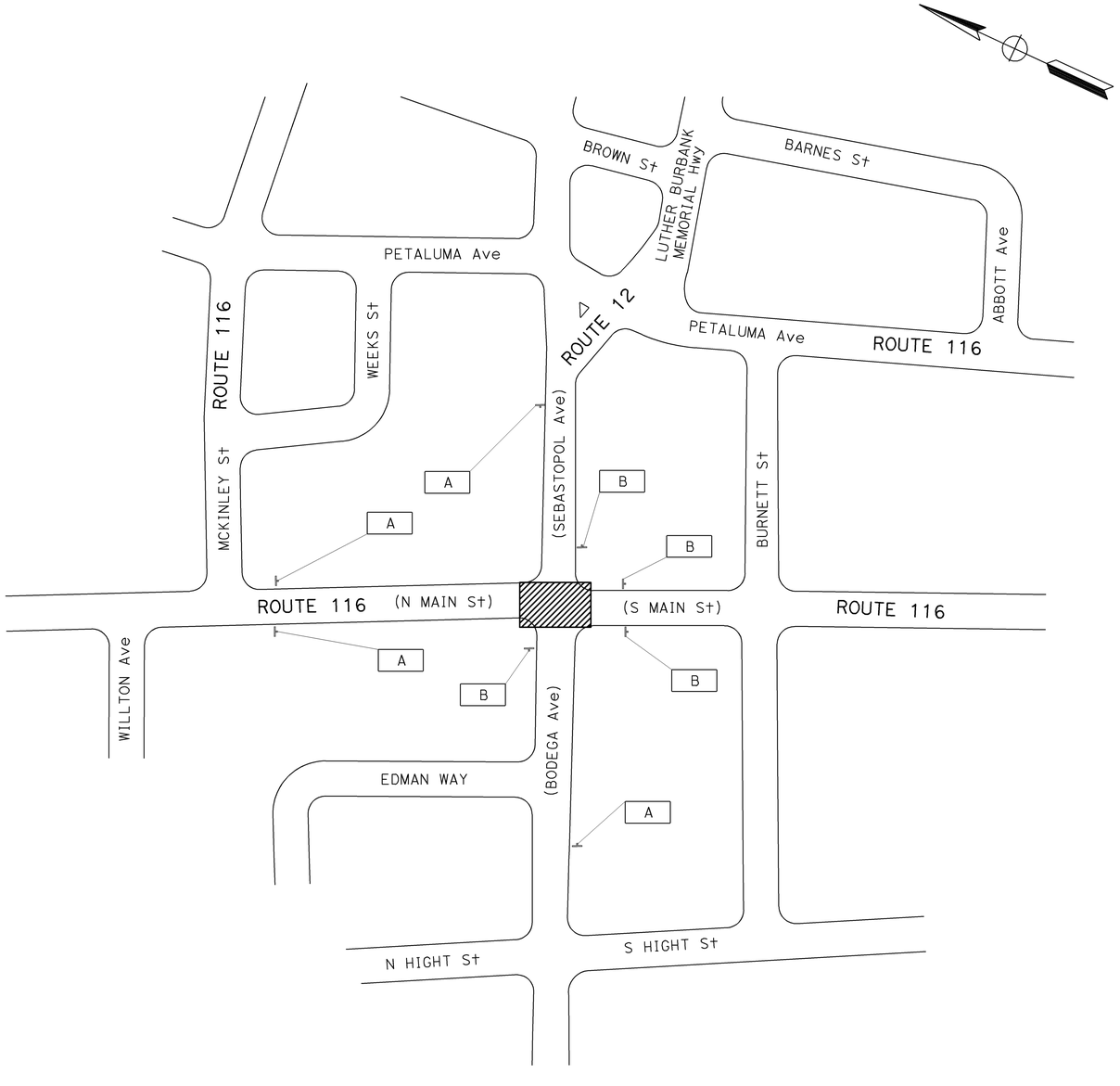

LEGEND

A — CONSTRUCTION AREA SIGNS

NOTES

1. EXACT LOCATION AND POSITION OF SIGN TO BE DETERMINED BY THE ENGINEER.
2. CONSRUCTION AREA SIGNS TO BE STATIONARY MOUNTED
3. SIGN POST LENGTH ARE APPROXIMATE, EXACT SIZE AND LENGTH TO BE DETERMINED BY THE ENGINEER.

CONSTRUCTION AREA SIGNS

NO SCALE

THIS PLAN ACCURATE FOR CONSTRUCTION AREA SIGN WORK ONLY

CS-1

LAST REVISION | DATE PLOTTED => 24-FEB-2010 | 12-17-09 | TIME PLOTTED => 11:05

STATE OF CALIFORNIA - DEPARTMENT OF TRANSPORTATION
TRAFFIC
FUNCTIONAL SUPERVISOR: ROLAND AU YEUNG
CALCULATED-DESIGNED BY: HENRY TAM
CHECKED BY: JERILYN STRUVEN
REVISED BY: HT
DATE REVISED: 2/2/10

BORDER LAST REVISED 4/11/2008 | RELATIVE BORDER SCALE IS IN INCHES 0 1 2 3 | USERNAME => s131681 | DGN FILE => 43a9901a001.dgn | CU 04223 | EA 3A9901

FOR ACCURATE RIGHT OF WAY AND
ACCESS DATA, CONTACT RIGHT OF WAY
ENGINEERING AT THE DISTRICT OFFICE.

NOTES:

1. EXACT LOCATION AND POSITION OF SIGN TO BE DETERMINED BY THE ENGINEER.
2. THE MAXIMUM SPACING BETWEEN CONES ALONG THE TANGENT SHALL BE 5' AND ALONG THE TAPER SHALL BE 10'.
3. ALL CONES USED FOR LANE CLOSURE DURING THE HOURS OF DARKNESS SHALL BE FITTED WITH RETROREFLECTIVE BANDS (OR SLEEVES) AS SPECIFIED IN THE SPECIFICATIONS.

Dist	COUNTY	ROUTE	POST MILES TOTAL PROJECT	SHEET No.	TOTAL SHEETS
04	Son	116,12	26.7, 9.2	12	58

Jianghong Li 2/16/10
REGISTERED CIVIL ENGINEER DATE

2-22-10
PLANS APPROVAL DATE

REGISTERED PROFESSIONAL ENGINEER — Jianghong Li — No. 71954 — Exp. 12-31-11 — CIVIL — STATE OF CALIFORNIA

THE STATE OF CALIFORNIA OR ITS OFFICERS OR AGENTS SHALL NOT BE RESPONSIBLE FOR THE ACCURACY OR COMPLETENESS OF SCANNED COPIES OF THIS PLAN SHEET.

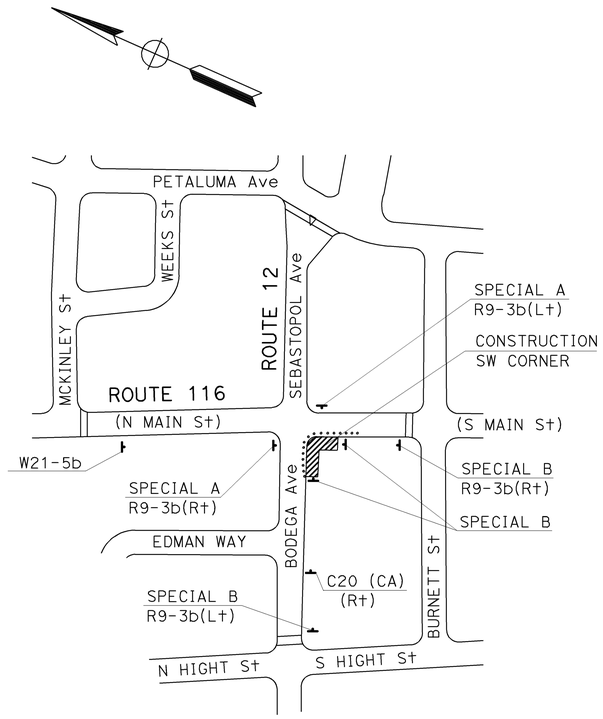

STAGING SIGN

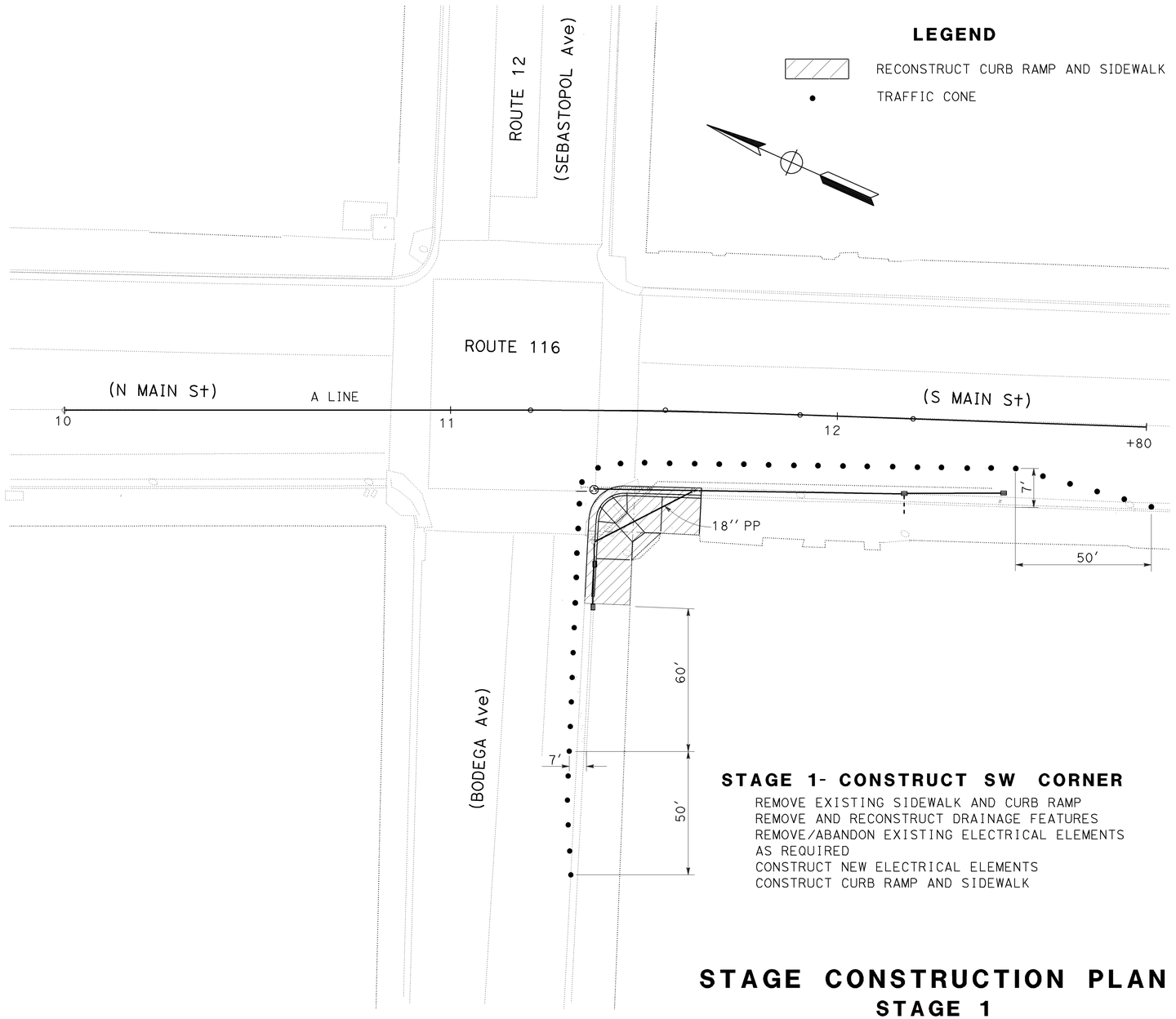

LEGEND

RECONSTRUCT CURB RAMP AND SIDEWALK

TRAFFIC CONE

STAGE 1- CONSTRUCT SW CORNER

REMOVE EXISTING SIDEWALK AND CURB RAMP
REMOVE AND RECONSTRUCT DRAINAGE FEATURES
REMOVE/ABANDON EXISTING ELECTRICAL ELEMENTS AS REQUIRED
CONSTRUCT NEW ELECTRICAL ELEMENTS
CONSTRUCT CURB RAMP AND SIDEWALK

STAGE CONSTRUCTION PLAN
STAGE 1

NO SCALE

THIS PLAN ACCURATE FOR
STAGE CONSTRUCTION WORK ONLY

SC-1

CALCULATED-DESIGNED BY	CHECKED BY	REVISED BY	DATE REVISED
JIANGHONG LI	MICHAEL T NGUYEN	JHL	2/2/10

FUNCTIONAL SUPERVISOR: MICHAEL T NGUYEN

STATE OF CALIFORNIA - DEPARTMENT OF TRANSPORTATION
Caltrans®
DESIGN

LAST REVISION: DATE PLOTTED => 24-FEB-2010 TIME PLOTTED => 11:04
02-02-10

BORDER LAST REVISED 4/11/2008

RELATIVE BORDER SCALE IS IN INCHES 0 1 2 3

USERNAME => s131681
DGN FILE => 43a990ma001.dgn

CU 04223

EA 3A9901

FOR ACCURATE RIGHT OF WAY AND
ACCESS DATA, CONTACT RIGHT OF WAY
ENGINEERING AT THE DISTRICT OFFICE.

Dist	COUNTY	ROUTE	POST MILES TOTAL PROJECT	SHEET No.	TOTAL SHEETS
04	Son	116,12	26.7, 9.2	13	58

2/16/10
REGISTERED CIVIL ENGINEER DATE

2-22-10
PLANS APPROVAL DATE

REGISTERED PROFESSIONAL ENGINEER
Jianghong Li
No. 71954
Exp. 12-31-11
CIVIL
STATE OF CALIFORNIA

THE STATE OF CALIFORNIA OR ITS OFFICERS OR AGENTS SHALL NOT BE RESPONSIBLE FOR THE ACCURACY OR COMPLETENESS OF SCANNED COPIES OF THIS PLAN SHEET.

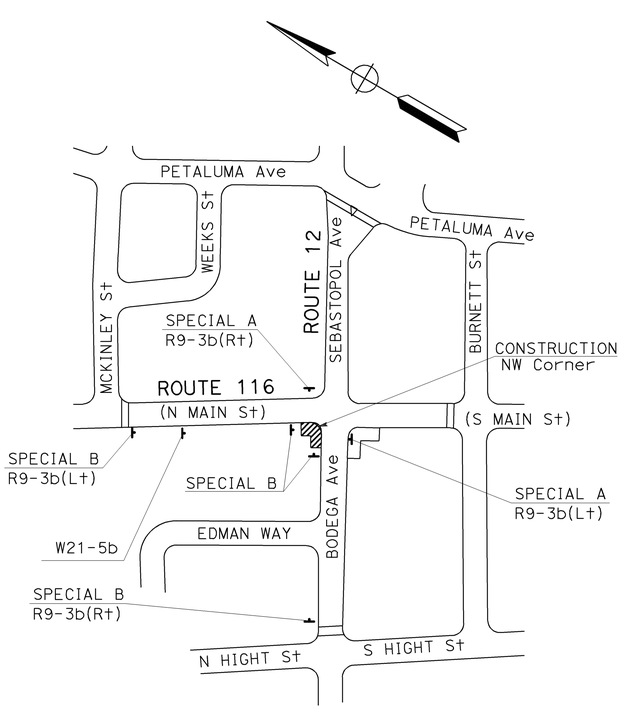

CONSTRUCTION SIGN

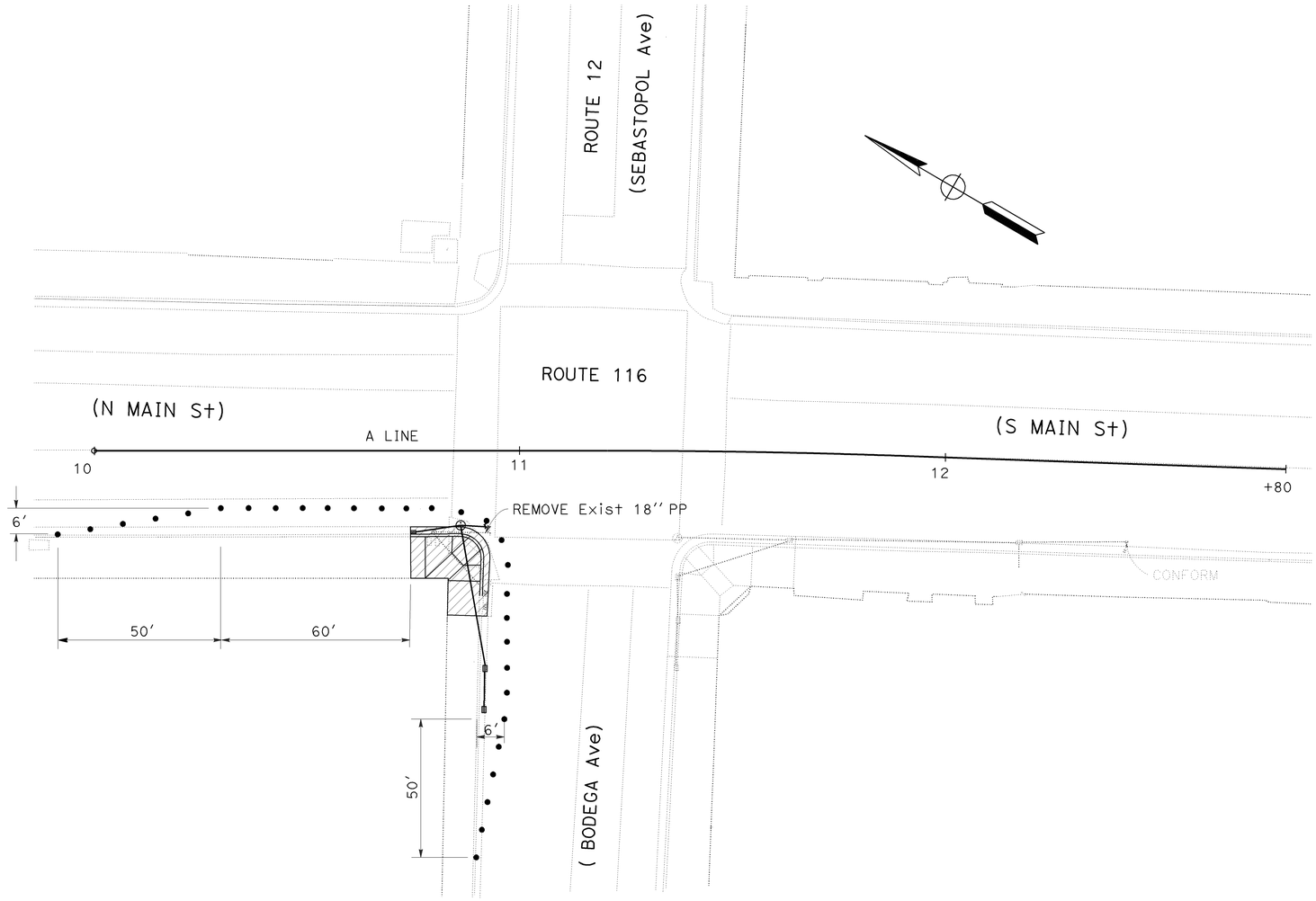

STAGE 2 - CONSTRUCT NW CORNER

REMOVE EXISTING SIDEWALK AND CURB RAMP
REMOVE AND RECONSTRUCT DRAINAGE FEATURES
REMOVE/ABANDON EXISTING ELECTRICAL ELEMENTS
AS REQUIRED
CONSTRUCT NEW ELECTRICAL ELEMENTS
CONSTRUCT CURB RAMP AND SIDEWALK

STAGE CONSTRUCTION PLAN
STAGE 2

NO SCALE

FOR NOTES, ABBREVIATIONS AND LEGEND, SEE SHEET SC-1

THIS PLAN ACCURATE FOR STAGE CONSTRUCTION WORK ONLY

SC-2

CALCULATED-DESIGNED BY: JIANGHONG LI
CHECKED BY: MICHAEL T NGUYEN
FUNCTIONAL SUPERVISOR: MICHAEL T NGUYEN
REVISED BY: JHL
DATE REVISED: 2/2/10
STATE OF CALIFORNIA - DEPARTMENT OF TRANSPORTATION
DESIGN

LAST REVISION: DATE PLOTTED => 24-FEB-2010
02-02-10 TIME PLOTTED => 11:04

FOR ACCURATE RIGHT OF WAY AND
ACCESS DATA, CONTACT RIGHT OF WAY
ENGINEERING AT THE DISTRICT OFFICE.

Dist	COUNTY	ROUTE	POST MILES TOTAL PROJECT	SHEET No.	TOTAL SHEETS
04	Son	116,12	26.7, 9.2	14	58

REGISTERED CIVIL ENGINEER — DATE 2/16/10

Jianghong Li
REGISTERED PROFESSIONAL ENGINEER
No. 71954
Exp. 12-31-11
CIVIL
STATE OF CALIFORNIA

2-22-10
PLANS APPROVAL DATE

THE STATE OF CALIFORNIA OR ITS OFFICERS OR AGENTS SHALL NOT BE RESPONSIBLE FOR THE ACCURACY OR COMPLETENESS OF SCANNED COPIES OF THIS PLAN SHEET.

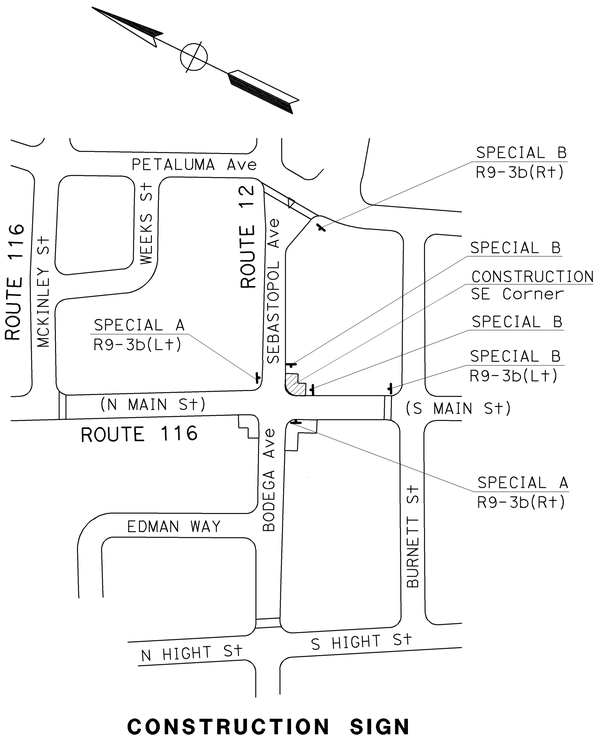

CONSTRUCTION SIGN

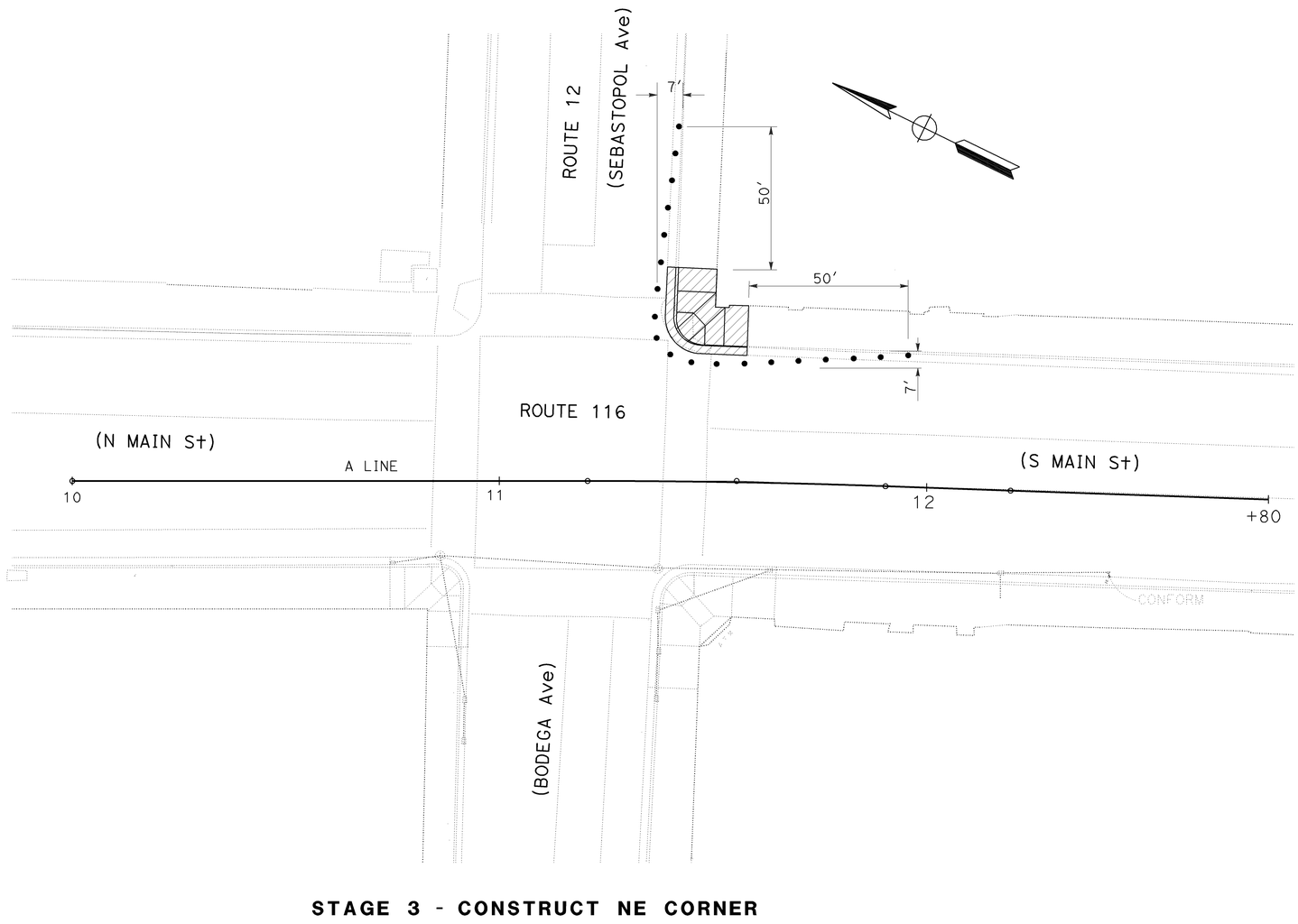

STAGE 3 - CONSTRUCT NE CORNER

REMOVE EXISTING SIDEWALK AND CURB RAMP
REMOVE/ABANDON EXISTING ELECTRICAL ELEMENTS
AS REQUIRED
CONSTRUCT NEW ELECTRICAL ELEMENTS
CONSTRUCT CURB RAMP AND SIDEWALK

STAGE CONSTRUCTION PLAN
STAGE 3

NO SCALE

FOR NOTES, ABBREVIATIONS AND LEGEND, SEE SHEET SC-1

THIS PLAN ACCURATE FOR
STAGE CONSTRUCTION WORK ONLY

SC-3

LAST REVISION | DATE PLOTTED => 24-FEB-2010
02-02-10 | TIME PLOTTED => 11:03

STATE OF CALIFORNIA - DEPARTMENT OF TRANSPORTATION
DESIGN
FUNCTIONAL SUPERVISOR: MICHAEL T NGUYEN
CALCULATED-DESIGNED BY: JIANGHONG LI
CHECKED BY: MICHAEL T NGUYEN
REVISED BY: JHL
DATE REVISED: 2/2/10

BORDER LAST REVISED 4/11/2008

RELATIVE BORDER SCALE IS IN INCHES 0 1 2 3

USERNAME => s131681
DGN FILE => 43a990ma003.dgn

CU 04223

EA 3A9901

FOR ACCURATE RIGHT OF WAY AND
ACCESS DATA, CONTACT RIGHT OF WAY
ENGINEERING AT THE DISTRICT OFFICE.

Dist	COUNTY	ROUTE	POST MILES TOTAL PROJECT	SHEET No.	TOTAL SHEETS
04	Son	116,12	26.7, 9.2	15	58

2/16/10
REGISTERED CIVIL ENGINEER DATE

Jianghong Li
No. 71954
Exp. 12-31-11
CIVIL
REGISTERED PROFESSIONAL ENGINEER
STATE OF CALIFORNIA

2-22-10
PLANS APPROVAL DATE

THE STATE OF CALIFORNIA OR ITS OFFICERS OR AGENTS SHALL NOT BE RESPONSIBLE FOR THE ACCURACY OR COMPLETENESS OF SCANNED COPIES OF THIS PLAN SHEET.

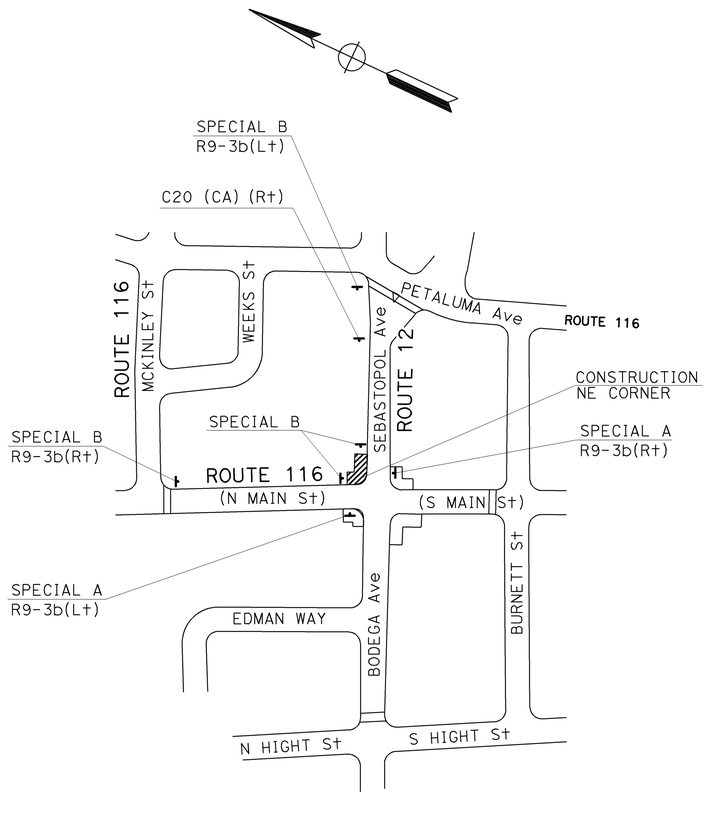

CONSTRUCTION SIGN

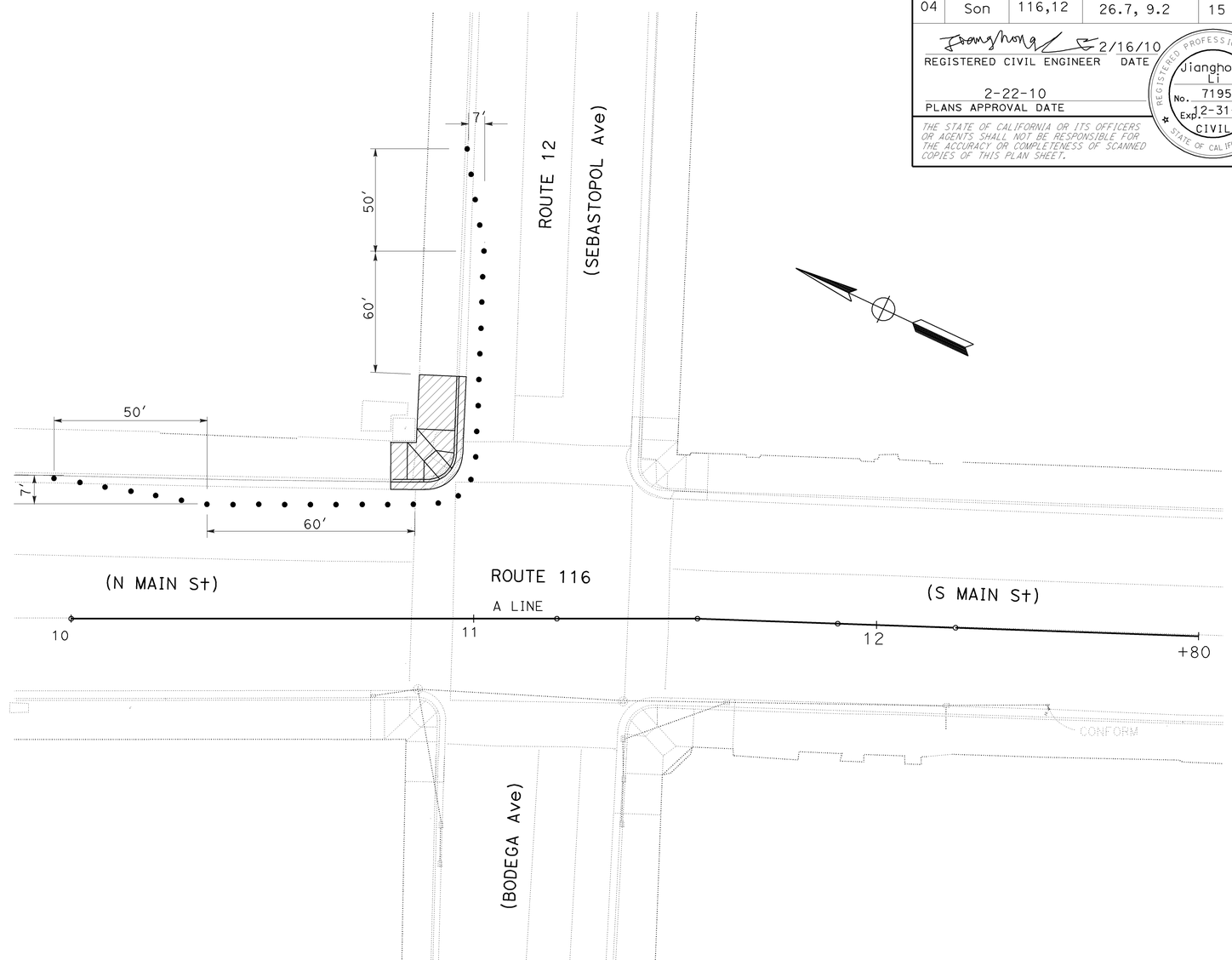

STAGE 4 - CONSTRUCT NE CORNER

REMOVE EXISTING SIDEWALK AND CURB RAMP
REMOVE/ABANDON EXISTING ELECTRICAL ELEMENTS
AS REQUIRED
CONSTRUCT NEW ELECTRICAL ELEMENTS
CONSTRUCT CURB RAMP AND SIDEWALK

STAGE CONSTRUCTION PLAN
STAGE 4

NO SCALE

FOR NOTES, ABBREVIATIONS
AND LEGEND, SEE SHEET SC-1

THIS PLAN ACCURATE FOR
STAGE CONSTRUCTION WORK ONLY

SC-4

LAST REVISION DATE PLOTTED => 24-FEB-2010
02-02-10 TIME PLOTTED => 11:02

CALCULATED-DESIGNED BY: JIANGHONG LI
CHECKED BY: MICHAEL T NGUYEN
REVISED BY: JHL
DATE REVISED: 2/2/10
FUNCTIONAL SUPERVISOR: MICHAEL T NGUYEN

STATE OF CALIFORNIA - DEPARTMENT OF TRANSPORTATION
DESIGN

BORDER LAST REVISED 4/11/2008

RELATIVE BORDER SCALE
IS IN INCHES
0 1 2 3

USERNAME => s131681
DGN FILE => 43a990ma004.dgn

CU 04223

EA 3A9901

Dist	COUNTY	ROUTE	POST MILES TOTAL PROJECT	SHEET No.	TOTAL SHEETS
04	Son	116,12	26.7, 9.2	16	58

REGISTERED CIVIL ENGINEER 2/16/10 DATE

2-22-10
PLANS APPROVAL DATE

REGISTERED PROFESSIONAL ENGINEER Jianghong Li No. 71954 Exp. 12-31-11 CIVIL STATE OF CALIFORNIA

THE STATE OF CALIFORNIA OR ITS OFFICERS OR AGENTS SHALL NOT BE RESPONSIBLE FOR THE ACCURACY OR COMPLETENESS OF SCANNED COPIES OF THIS PLAN SHEET.

FOR ACCURATE RIGHT OF WAY AND ACCESS DATA, CONTACT RIGHT OF WAY ENGINEERING AT THE DISTRICT OFFICE.

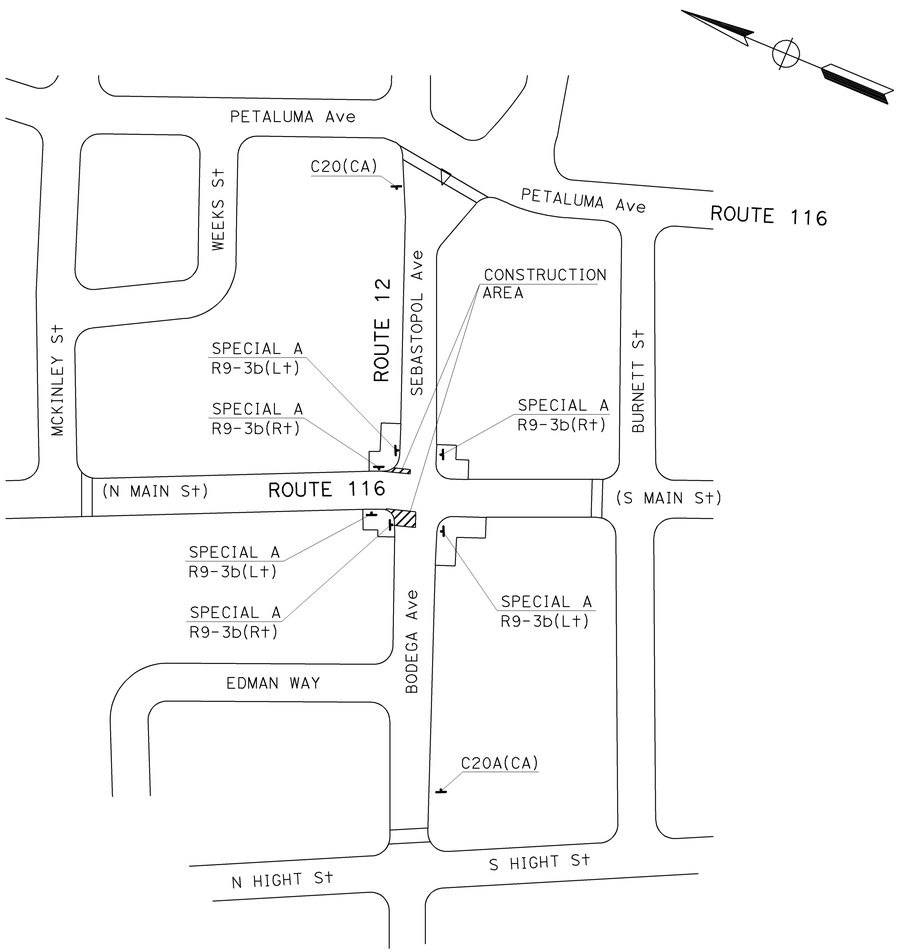

CONSTRUCTION SIGN

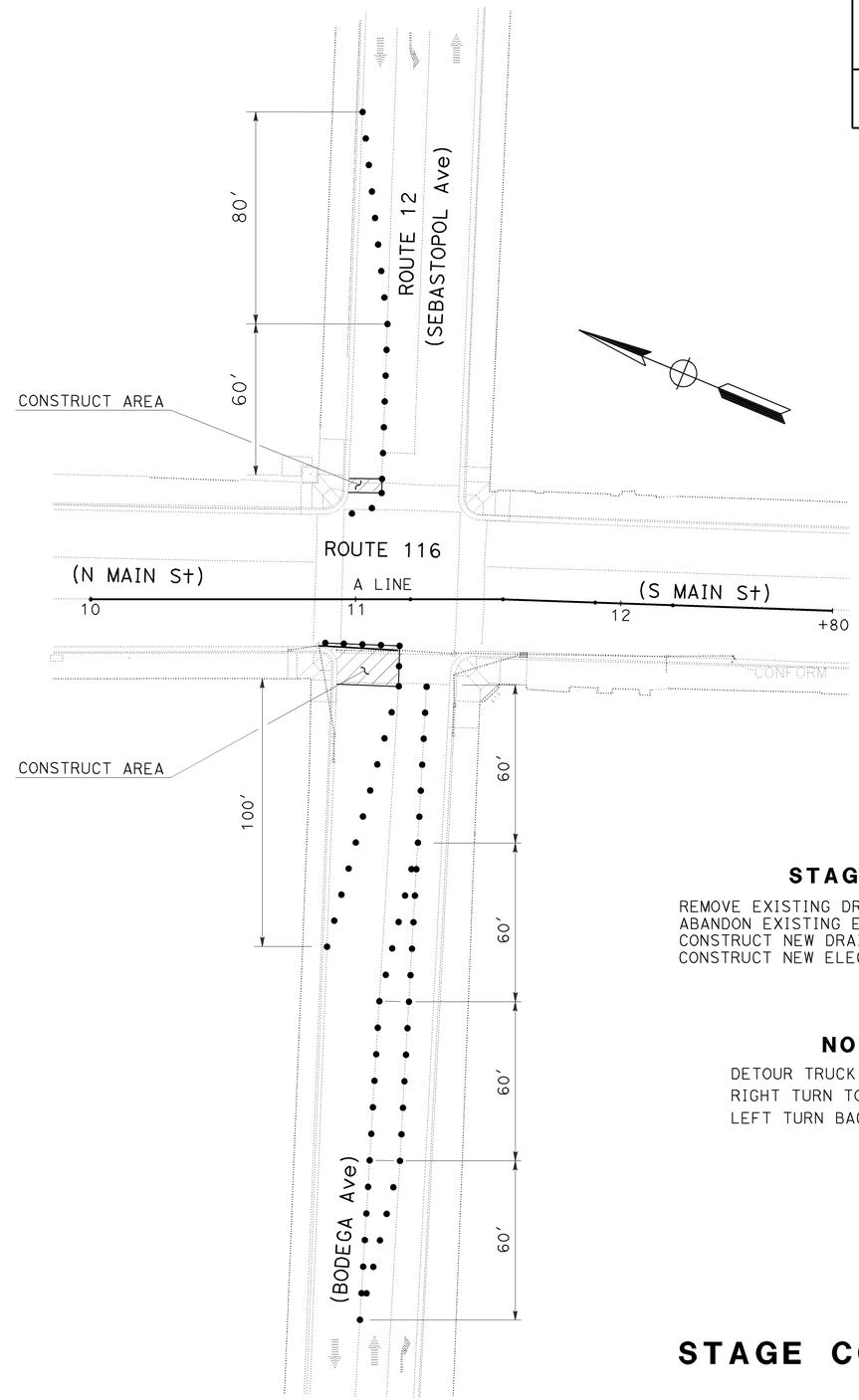

STAGE 5A

REMOVE EXISTING DRAINAGE PIPE AS REQUIRED
ABANDON EXISTING ELECTRICAL CIRCUIT AS REQUIRED
CONSTRUCT NEW DRAINAGE PIPE
CONSTRUCT NEW ELECTRICAL CIRCUIT

NOTE

DETOUR TRUCK FROM ROUTE 116 WB TO BURNETT St WB
RIGHT TURN TO S HIGH St NB,
LEFT TURN BACK TO BODEGA Ave WB.

STAGE CONSTRUCTION PLAN
STAGE 5A

NO SCALE

FOR NOTES, ABBREVIATIONS AND LEGEND, SEE SHEET SC-I

THIS PLAN ACCURATE FOR STAGE CONSTRUCTION WORK ONLY

SC-5

STATE OF CALIFORNIA - DEPARTMENT OF TRANSPORTATION
Caltrans
DESIGN

FUNCTIONAL SUPERVISOR: MICHAEL T NGUYEN
CALCULATED-DESIGNED BY: JIANGHONG LI
CHECKED BY: MICHAEL T NGUYEN
REVISED BY: JHL
DATE REVISED: 2/2/10

LAST REVISION 02-02-10
DATE PLOTTED => 24-FEB-2010
TIME PLOTTED => 11:02

FOR ACCURATE RIGHT OF WAY AND
ACCESS DATA, CONTACT RIGHT OF WAY
ENGINEERING AT THE DISTRICT OFFICE.

Dist	COUNTY	ROUTE	POST MILES TOTAL PROJECT	SHEET No.	TOTAL SHEETS
04	Son	116,12	26.7, 9.2	17	58

REGISTERED CIVIL ENGINEER — DATE 2/16/10

Jianghong Li
No. 71954
Exp. 12-31-11
CIVIL
REGISTERED PROFESSIONAL ENGINEER
STATE OF CALIFORNIA

2-22-10
PLANS APPROVAL DATE

THE STATE OF CALIFORNIA OR ITS OFFICERS OR AGENTS SHALL NOT BE RESPONSIBLE FOR THE ACCURACY OR COMPLETENESS OF SCANNED COPIES OF THIS PLAN SHEET.

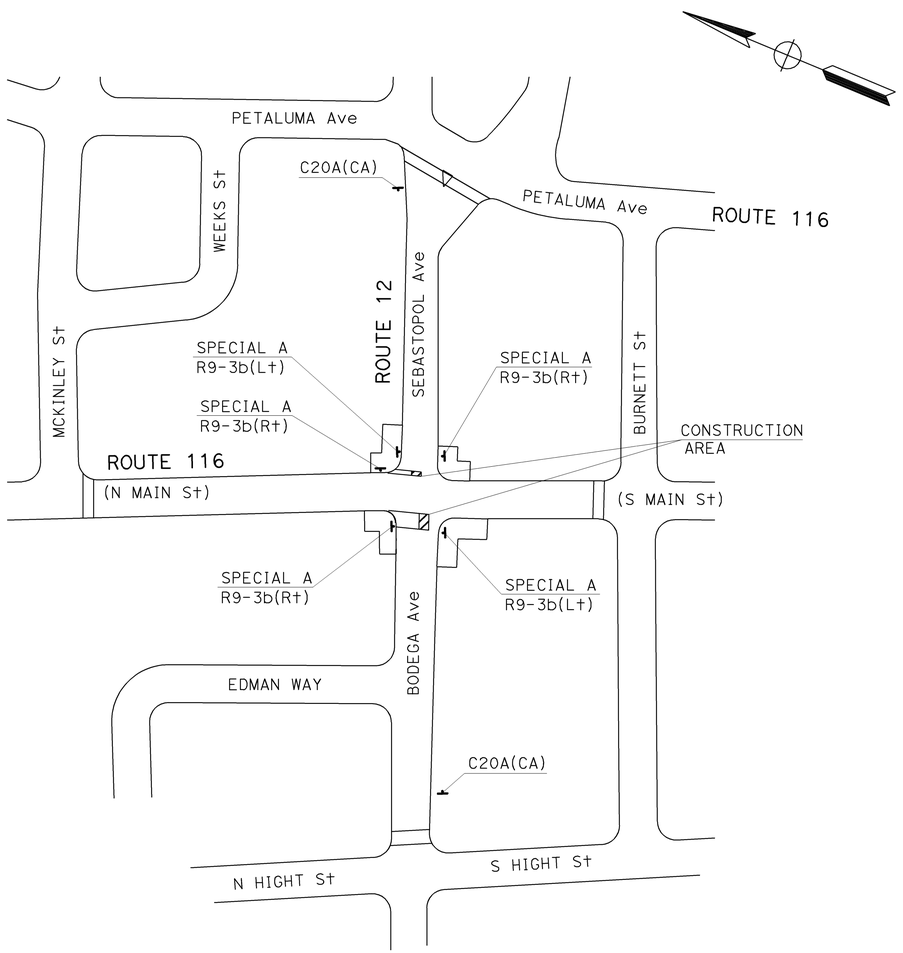

CONSTRUCTION SIGN

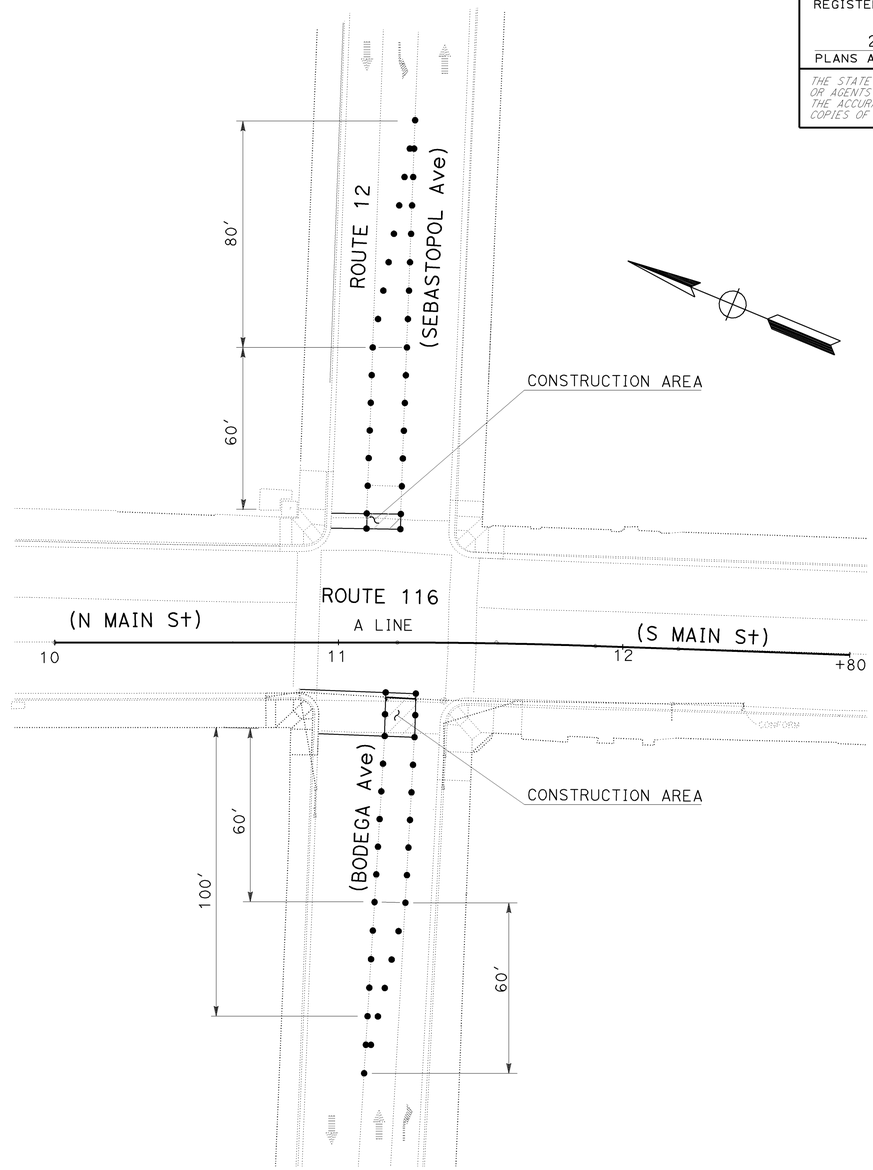

STAGE 5B

REMOVE EXISTING DRAINAGE PIPE AS REQUIRED
ABANDON EXISTING ELECTRICAL CIRCUIT AS REQUIRED
CONSTRUCT NEW DRAINAGE PIPE
CONSTRUCT NEW ELECTRICAL CIRCUIT

STAGE CONSTRUCTION PLAN
STAGE 5B

NO SCALE

FOR NOTES, ABBREVIATIONS AND LEGEND, SEE SHEET SC-1

THIS PLAN ACCURATE FOR STAGE CONSTRUCTION WORK ONLY

SC-6

CALCULATED-DESIGNED BY	JIANGHONG LI	REVISED BY	JHL
CHECKED BY	MICHAEL T NGUYEN	DATE REVISED	2/2/10
FUNCTIONAL SUPERVISOR	MICHAEL T NGUYEN		

STATE OF CALIFORNIA - DEPARTMENT OF TRANSPORTATION
DESIGN

LAST REVISION: DATE PLOTTED => 24-FEB-2010
02-02-10 TIME PLOTTED => 11:01

BORDER LAST REVISED 4/11/2008

RELATIVE BORDER SCALE IS IN INCHES 0 1 2 3

USERNAME => s131681
DGN FILE => 43a990ma006.dgn

CU 04223

EA 3A9901

FOR ACCURATE RIGHT OF WAY AND
ACCESS DATA, CONTACT RIGHT OF WAY
ENGINEERING AT THE DISTRICT OFFICE.

Dist	COUNTY	ROUTE	POST MILES TOTAL PROJECT	SHEET No.	TOTAL SHEETS
04	Son	116,12	26.7, 9.2	18	58

Jianghong Li 2/16/10
REGISTERED CIVIL ENGINEER DATE

2-22-10
PLANS APPROVAL DATE

REGISTERED PROFESSIONAL ENGINEER
Jianghong Li
No. 71954
Exp. 12-31-11
CIVIL
STATE OF CALIFORNIA

THE STATE OF CALIFORNIA OR ITS OFFICERS OR AGENTS SHALL NOT BE RESPONSIBLE FOR THE ACCURACY OR COMPLETENESS OF SCANNED COPIES OF THIS PLAN SHEET.

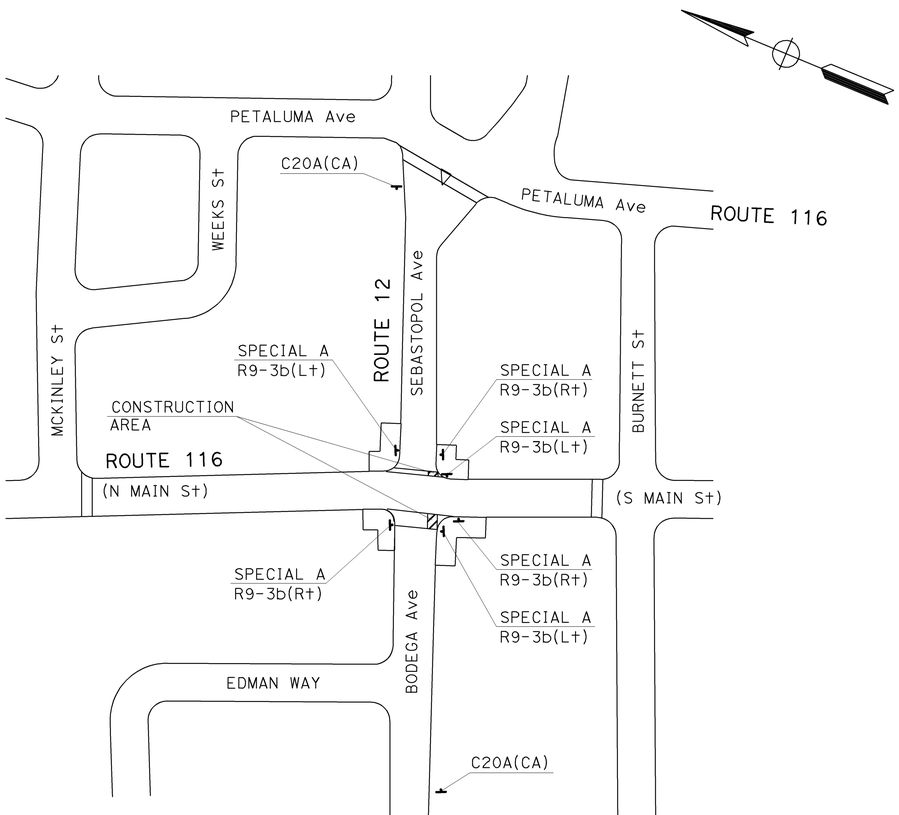

CONSTRUCTION SIGN

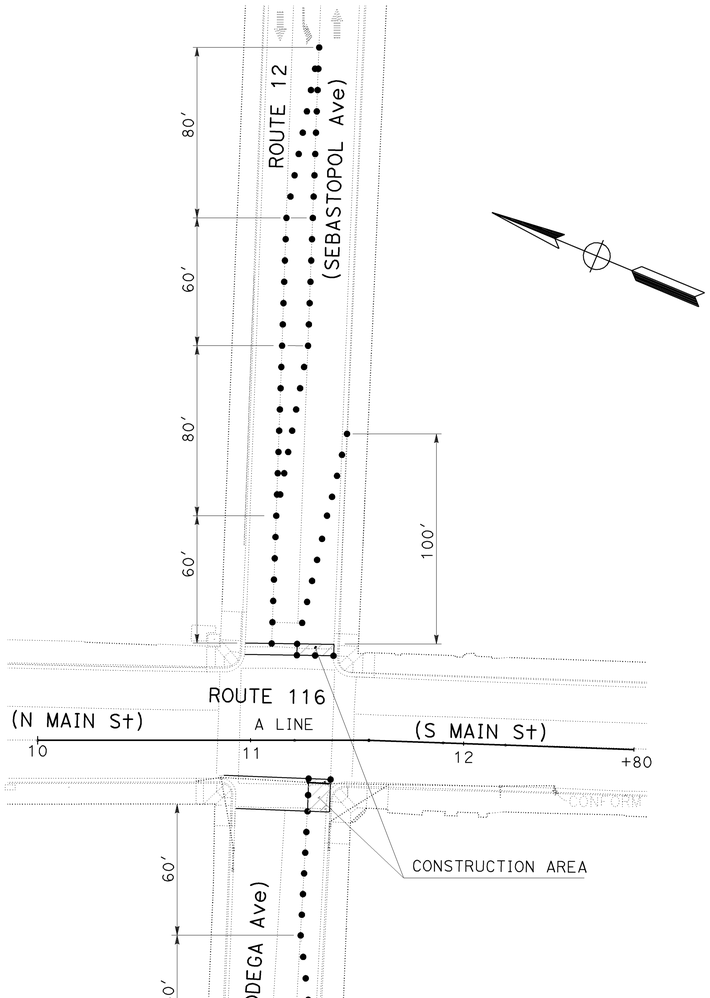

STAGE 5C

REMOVE EXISTING DRAINAGE PIPE AS REQUIRED
ABANDON EXISTING ELECTRICAL CIRCUIT AS REQUIRED
CONSTRUCT NEW DRAINAGE PIPE
CONSTRUCT NEW ELECTRICAL CIRCUIT

STAGE CONSTRUCTION PLAN
STAGE 5C

NO SCALE

FOR NOTES, ABBREVIATIONS AND LEGEND, SEE SHEET SC-1

THIS PLAN ACCURATE FOR STAGE CONSTRUCTION WORK ONLY

SC-7

CALCULATED-DESIGNED BY	JIANGHONG LI	REVISED BY: JHL
CHECKED BY	MICHAEL T NGUYEN	DATE REVISED: 2/2/10
FUNCTIONAL SUPERVISOR	MICHAEL T NGUYEN	

STATE OF CALIFORNIA - DEPARTMENT OF TRANSPORTATION
DESIGN

LAST REVISION DATE PLOTTED => 24-FEB-2010
02-04-10 TIME PLOTTED => 10:58

BORDER LAST REVISED 4/11/2008

RELATIVE BORDER SCALE IS IN INCHES 0 1 2 3

USERNAME => s131681
DGN FILE => 43a990ma007.dgn

CU 04223

EA 3A9901

FOR ACCURATE RIGHT OF WAY AND
ACCESS DATA, CONTACT RIGHT OF WAY
ENGINEERING AT THE DISTRICT OFFICE.

Dist	COUNTY	ROUTE	POST MILES TOTAL PROJECT	SHEET No.	TOTAL SHEETS
04	Son	116,12	26.7, 9.2	19	58

2/16/10
REGISTERED CIVIL ENGINEER DATE

Jianghong Li
No. 71954
Exp. 12-31-11
CIVIL
REGISTERED PROFESSIONAL ENGINEER
STATE OF CALIFORNIA

2-22-10
PLANS APPROVAL DATE

THE STATE OF CALIFORNIA OR ITS OFFICERS OR AGENTS SHALL NOT BE RESPONSIBLE FOR THE ACCURACY OR COMPLETENESS OF SCANNED COPIES OF THIS PLAN SHEET.

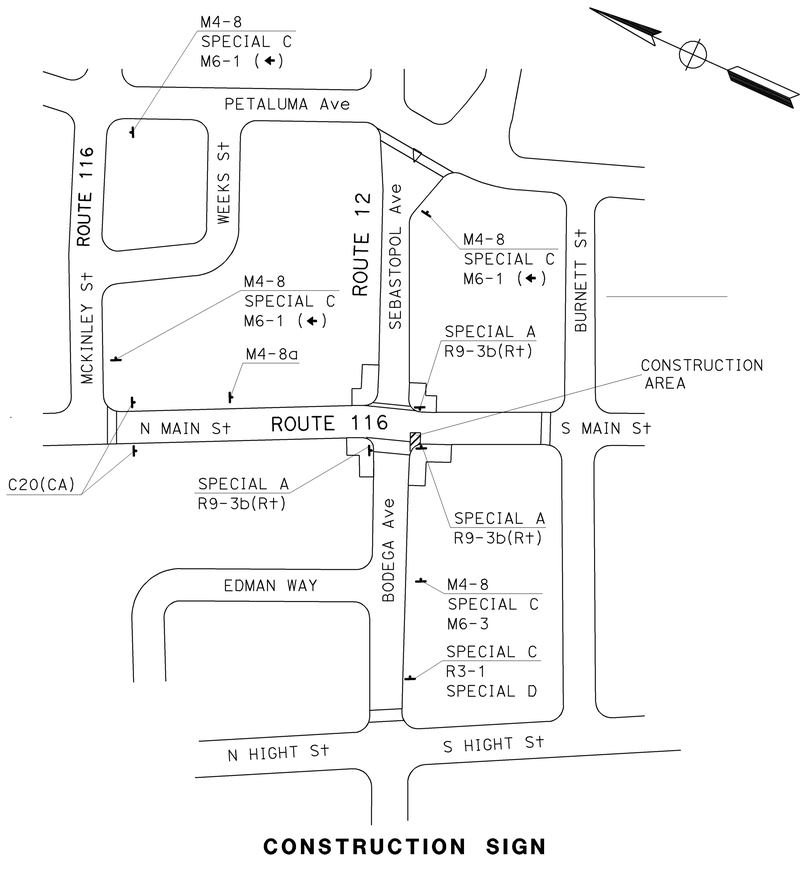

CONSTRUCTION SIGN

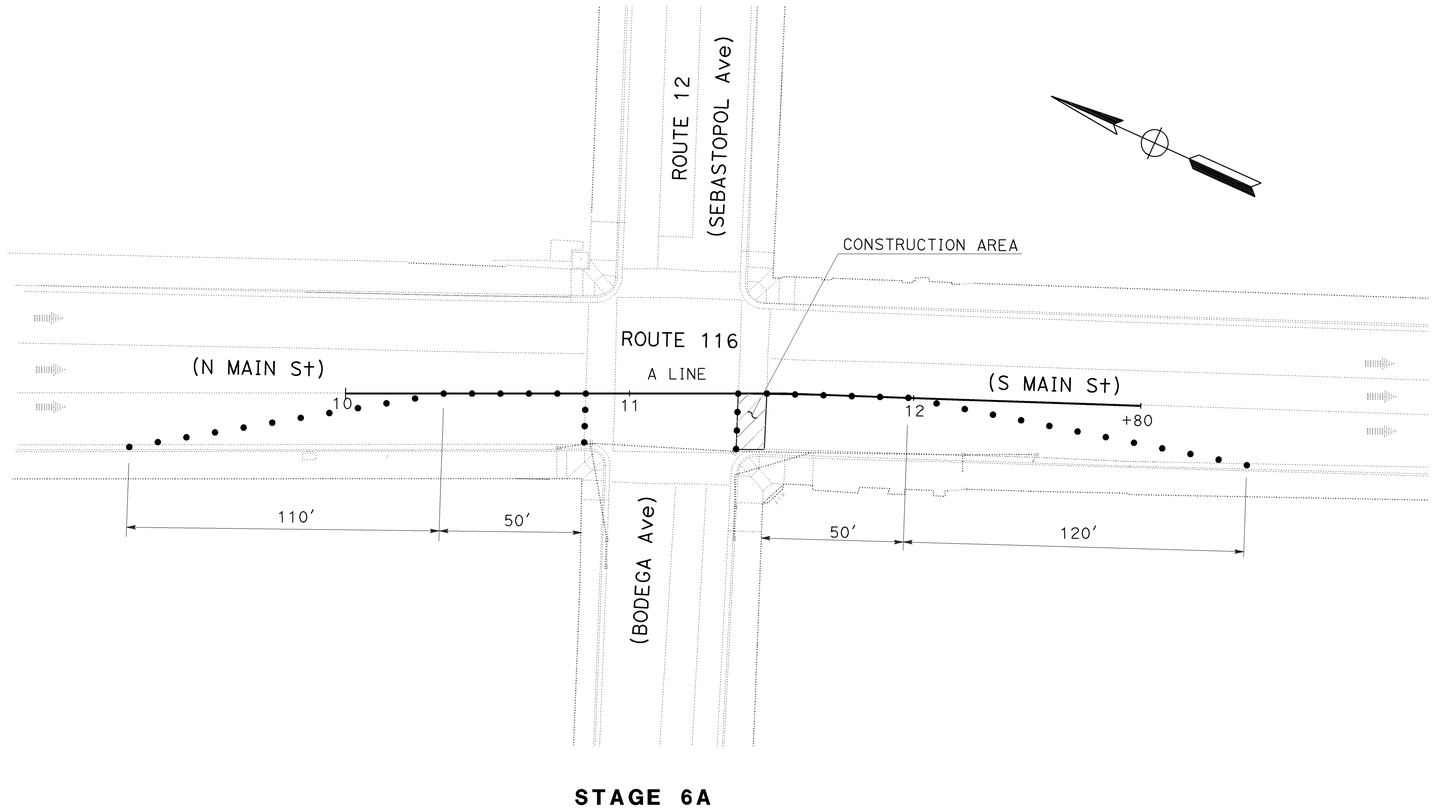

STAGE 6A

ABANDON EXISTING ELECTRICAL CIRCUIT AS REQUIRED
CONSTRUCT NEW ELECTRICAL CIRCUIT

STAGE CONSTRUCTION PLAN

STAGE 6A

NO SCALE

FOR NOTES, ABBREVIATIONS AND LEGEND, SEE SHEET SC-1

THIS PLAN ACCURATE FOR STAGE CONSTRUCTION WORK ONLY

SC-8

CALCULATED-DESIGNED BY	JIANGHONG LI	REVISED BY	JHL
CHECKED BY	MICHAEL T NGUYEN	DATE REVISED	2/2/10
FUNCTIONAL SUPERVISOR	MICHAEL T NGUYEN		

STATE OF CALIFORNIA - DEPARTMENT OF TRANSPORTATION
DESIGN

LAST REVISION DATE PLOTTED => 24-FEB-2010
TIME PLOTTED => 10:58

BORDER LAST REVISED 4/11/2008

RELATIVE BORDER SCALE IS IN INCHES 0 1 2 3

USERNAME => s131681
DGN FILE => 43a990ma008.dgn

CU 04223

EA 3A9901

Dist	COUNTY	ROUTE	POST MILES TOTAL PROJECT	SHEET No.	TOTAL SHEETS
04	Son	116,12	26.7, 9.2	20	58

REGISTERED CIVIL ENGINEER 2/16/10 DATE

2-22-10
PLANS APPROVAL DATE

REGISTERED PROFESSIONAL ENGINEER Jianghong Li No. 71954 Exp. 12-31-11 CIVIL STATE OF CALIFORNIA

THE STATE OF CALIFORNIA OR ITS OFFICERS OR AGENTS SHALL NOT BE RESPONSIBLE FOR THE ACCURACY OR COMPLETENESS OF SCANNED COPIES OF THIS PLAN SHEET.

FOR ACCURATE RIGHT OF WAY AND ACCESS DATA, CONTACT RIGHT OF WAY ENGINEERING AT THE DISTRICT OFFICE.

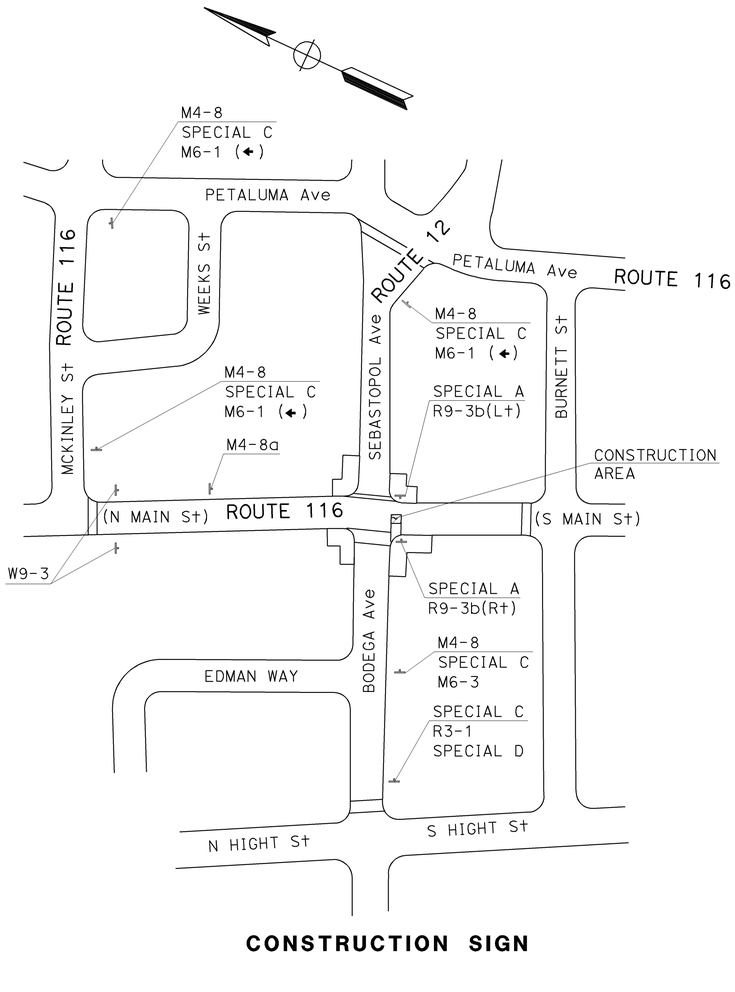

CONSTRUCTION SIGN

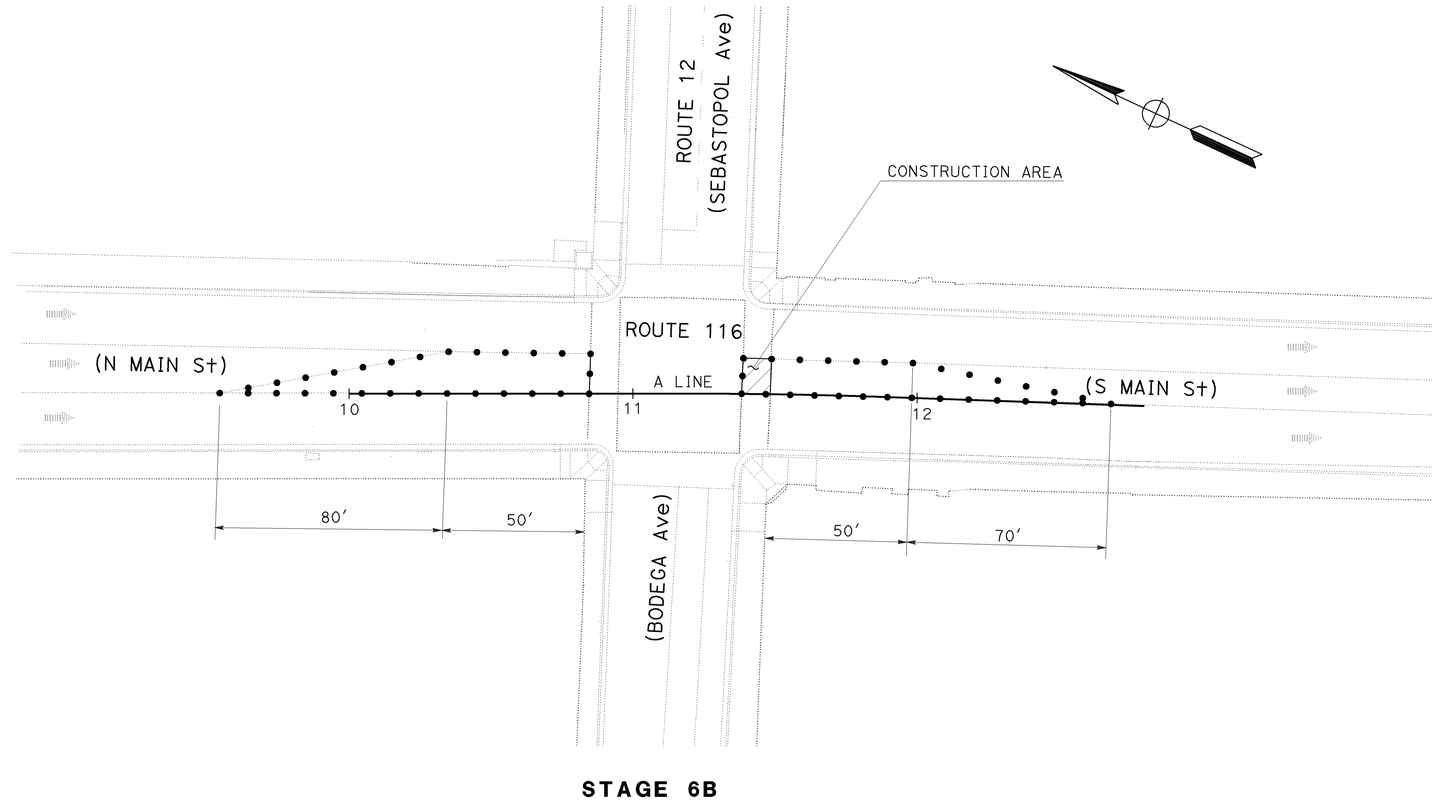

STAGE 6B

ABANDON EXISTING ELECTRICAL CIRCUIT AS REQUIRED
CONSTRUCT NEW ELECTRICAL CIRCUIT

STAGE CONSTRUCTION PLAN
STAGE 6B
NO SCALE

FOR NOTES, ABBREVIATIONS AND LEGEND, SEE SHEET SC-I

THIS PLAN ACCURATE FOR STAGE CONSTRUCTION WORK ONLY

SC-9

STATE OF CALIFORNIA - DEPARTMENT OF TRANSPORTATION
Caltrans
DESIGN

FUNCTIONAL SUPERVISOR: MICHAEL T NGUYEN
CALCULATED-DESIGNED BY: JIANGHONG LI
CHECKED BY: MICHAEL T NGUYEN
REVISED BY: JHL
DATE REVISED: 2/2/10

LAST REVISION 02-02-10
DATE PLOTTED => 24-FEB-2010
TIME PLOTTED => 10:57

FOR ACCURATE RIGHT OF WAY AND
ACCESS DATA, CONTACT RIGHT OF WAY
ENGINEERING AT THE DISTRICT OFFICE.

Dist	COUNTY	ROUTE	POST MILES TOTAL PROJECT	SHEET No.	TOTAL SHEETS
04	Son	116,12	26.7, 9.2	21	58

REGISTERED CIVIL ENGINEER — DATE 2/16/10

2-22-10
PLANS APPROVAL DATE

REGISTERED PROFESSIONAL ENGINEER
Jianghong Li
No. 71954
Exp. 12-31-11
CIVIL
STATE OF CALIFORNIA

THE STATE OF CALIFORNIA OR ITS OFFICERS OR AGENTS SHALL NOT BE RESPONSIBLE FOR THE ACCURACY OR COMPLETENESS OF SCANNED COPIES OF THIS PLAN SHEET.

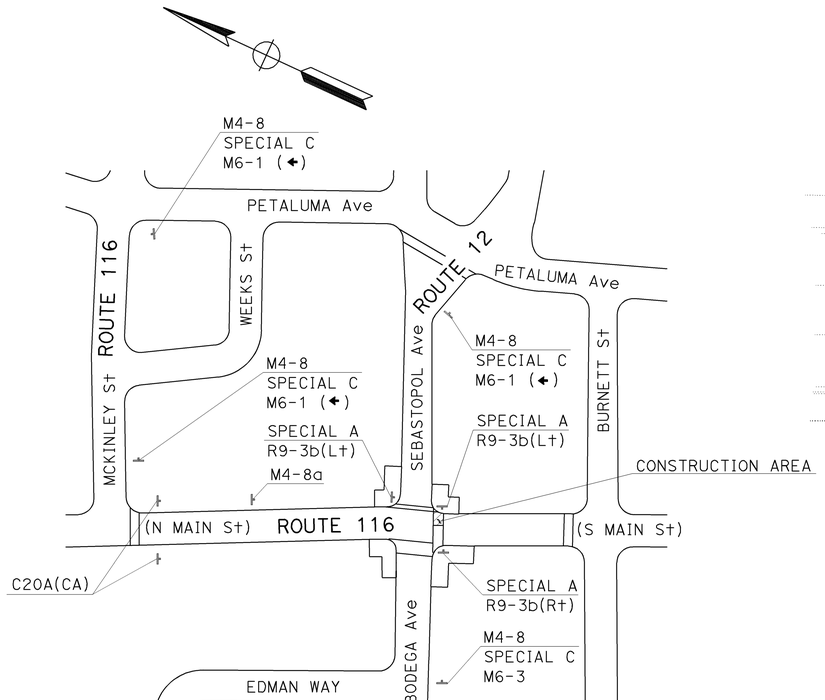

CONSTRUCTION SIGN

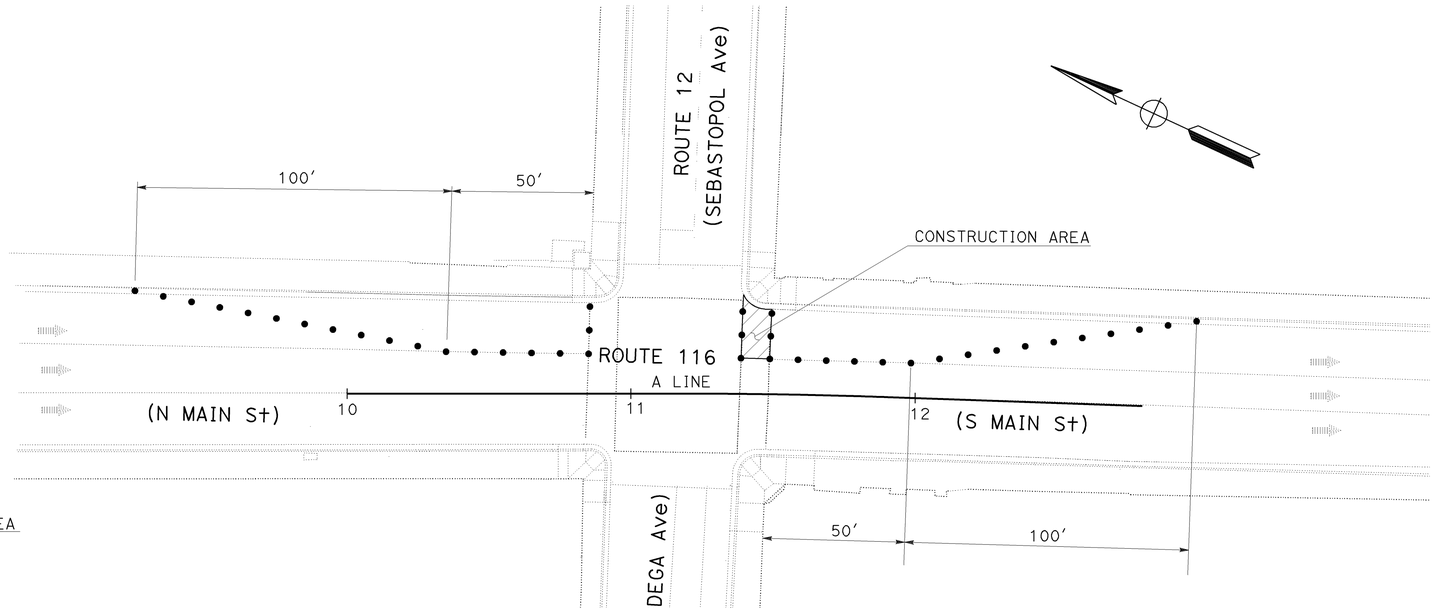

STAGE 6C

ABANDON EXISTING ELECTRICAL CIRCUIT AS REQUIRED
CONSTRUCT NEW ELECTRICAL CIRCUIT

STAGE CONSTRUCTION PLAN

STAGE 6C

NO SCALE

FOR NOTES, ABBREVIATIONS AND LEGEND, SEE SHEET SC-1

THIS PLAN ACCURATE FOR STAGE CONSTRUCTION WORK ONLY

SC-10

CALCULATED-DESIGNED BY	CHECKED BY	REVISED BY	DATE REVISED
JIANGHONG LI	MICHAEL T NGUYEN	JHL	2/2/10

FUNCTIONAL SUPERVISOR: MICHAEL T NGUYEN

STATE OF CALIFORNIA - DEPARTMENT OF TRANSPORTATION
DESIGN

LAST REVISION 02-02-10 | DATE PLOTTED => 24-FEB-2010 | TIME PLOTTED => 10:56

Dist	COUNTY	ROUTE	POST MILES TOTAL PROJECT	SHEET No.	TOTAL SHEETS
04	Son	116,12	26.7, 9.2	22	58

2/16/10
REGISTERED CIVIL ENGINEER DATE

2-22-10
PLANS APPROVAL DATE

REGISTERED PROFESSIONAL ENGINEER
Jianghong Li
No. 71954
Exp. 12-31-11
CIVIL
STATE OF CALIFORNIA

THE STATE OF CALIFORNIA OR ITS OFFICERS OR AGENTS SHALL NOT BE RESPONSIBLE FOR THE ACCURACY OR COMPLETENESS OF SCANNED COPIES OF THIS PLAN SHEET.

CONSTRUCTION AREA SIGNS (STATIONARY MOUNTED)

SHEET No.	SIGN No.	MUTCD CODE	MESSAGE	PANEL SIZE	No. OF POST AND SIZE	No. OF SIGNS	REMARKS
SC-1	A	C20(CA)	RIGHT LANE CLOSED AHEAD	36" x 36"	(ONE) 4" x 6"	1	STAGE 1
	B	W21-5b	RIGHT SHOULDER CLOSED AHEAD	30" x 30"	(ONE) 4" x 4"	1	
	C	SPECIAL A	CROSSWALK CLOSED	18" x 12"	(ONE) 4" x 6"	1	
		R9-3b(L†)	USE -> CROSS WALK	18" x 12"			
	D	SPECIAL A	CROSSWALK CLOSED	18" x 12"	(ONE) 4" x 6"	1	
		R9-3b(R†)	USE -> CROSS WALK	18" x 12"			
	E	SPECIAL B	SIDEWALK CLOSED	18" x 12"	(ONE) 4" x 4"	2	
	F	SPECIAL B	SIDEWALK CLOSED	18" x 12"	(ONE) 4" x 6"	1	
		R9-3b(L†)	USE -> CROSS WALK	18" x 12"			
	G	SPECIAL B	SIDEWALK CLOSED	18" x 12"	(ONE) 4" x 6"	1	
		R9-3b(R†)	USE -> CROSS WALK	18" x 12"			
SC-2	B	W21-5b	RIGHT SHOULDER CLOSED AHEAD	30" x 30"	(ONE) 4" x 4"	1	STAGE 2
	C	SPECIAL A	CROSSWALK CLOSED	18" x 12"	(ONE) 4" x 6"	1	
		R9-3b(L†)	USE -> CROSS WALK	18" x 12"			
	D	SPECIAL A	CROSSWALK CLOSED	18" x 12"	(ONE) 4" x 6"	1	
		R9-3b(R†)	USE -> CROSS WALK	18" x 12"			
	E	SPECIAL B	SIDEWALK CLOSED	18" x 12"	(ONE) 4" x 4"	2	
	F	SPECIAL B	SIDEWALK CLOSED	18" x 12"	(ONE) 4" x 6"	1	
		R9-3b(L†)	USE -> CROSS WALK	18" x 12"			
	G	SPECIAL B	SIDEWALK CLOSED	18" x 12"	(ONE) 4" x 6"	1	
		R9-3b(R†)	USE -> CROSS WALK	18" x 12"			
SC-3	C	SPECIAL A	CROSSWALK CLOSED	18" x 12"	(ONE) 4" x 6"	1	STAGE 3
		R9-3b(L†)	USE -> CROSS WALK	18" x 12"			
	D	SPECIAL A	CROSSWALK CLOSED	18" x 12"	(ONE) 4" x 6"	1	
		R9-3b(R†)	USE -> CROSS WALK	18" x 12"			
	E	SPECIAL B	SIDEWALK CLOSED	18" x 12"	(ONE) 4" x 4"	2	
	F	SPECIAL B	SIDEWALK CLOSED	18" x 12"	(ONE) 4" x 6"	1	
		R9-3b(L†)	USE -> CROSS WALK	18" x 12"			
	G	SPECIAL B	SIDEWALK CLOSED	18" x 12"	(ONE) 4" x 6"	1	
		R9-3b(R†)	USE -> CROSS WALK	18" x 12"			
SC-4	A	C20(CA)	RIGHT LANE CLOSED AHEAD	36" x 36"	(ONE) 4" x 6"	1	STAGE 4
	C	SPECIAL A	CROSSWALK CLOSED	18" x 12"	(ONE) 4" x 6"	1	
		R9-3b(L†)	USE -> CROSS WALK	18" x 12"			
	D	SPECIAL A	CROSSWALK CLOSED	18" x 12"	(ONE) 4" x 6"	1	
		R9-3b(R†)	USE -> CROSS WALK	18" x 12"			
	E	SPECIAL B	SIDEWALK CLOSED	18" x 12"	(ONE) 4" x 4"	2	
	F	SPECIAL B	SIDEWALK CLOSED	18" x 12"	(ONE) 4" x 6"	1	
		R9-3b(L†)	USE -> CROSS WALK	18" x 12"			
	G	SPECIAL B	SIDEWALK CLOSED	18" x 12"	(ONE) 4" x 6"	1	
		R9-3b(R†)	USE -> CROSS WALK	18" x 12"			

NOTES

1. NUMBER OF SIGNS PER STAGE CONSTRUCTION.
2. EXACT SIGN LOCATION TO BE DETERMINED BY ENGINEER.
3. SEE CONSTRUCTION AREA SIGNS, DETOUR LAYOUT AND TRAFFIC HANDLING PLANS FOR ADDITIONAL CONSTRUCTION AREA SIGNS.
4. CONSTRUCTION STAGING SIGN SHALL BE REUSED FOR THE NEXT STAGE AFTER THE COMPLETION OF ONE STAGE.
5. QUANTITIES ARE FOR STAGING FEATURES ONLY.

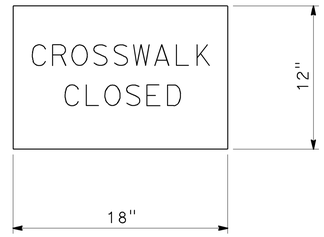

SPECIAL A
(3"CAP)

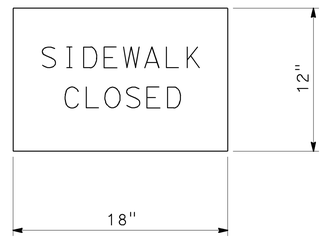

SPECIAL B
(3"CAP)

STAGE CONSTRUCTION QUANTITIES

SCQ-1

REVISED BY	DATE REVISED
JHL	2/2/10

JIANGHONG LI — CALCULATED-DESIGNED BY
MICHAEL T NGUYEN — CHECKED BY
MICHAEL T NGUYEN — FUNCTIONAL SUPERVISOR

STATE OF CALIFORNIA - DEPARTMENT OF TRANSPORTATION
DESIGN

LAST REVISION DATE PLOTTED => 24-FEB-2010
02-02-10 TIME PLOTTED => 10:56

Dist	COUNTY	ROUTE	POST MILES TOTAL PROJECT	SHEET No.	TOTAL SHEETS
04	Son	116,12	26.7, 9.2	23	58

REGISTERED CIVIL ENGINEER — DATE 2/16/10

Jianghong Li, No. 71954, Exp. 12-31-11, CIVIL — REGISTERED PROFESSIONAL ENGINEER — STATE OF CALIFORNIA

2-22-10
PLANS APPROVAL DATE

THE STATE OF CALIFORNIA OR ITS OFFICERS OR AGENTS SHALL NOT BE RESPONSIBLE FOR THE ACCURACY OR COMPLETENESS OF SCANNED COPIES OF THIS PLAN SHEET.

CONSTRUCTION AREA SIGNS (STATIONARY MOUNTED)

SHEET No.	SIGN No.	MUTCD CODE	MESSAGE	PANEL SIZE	No. OF POST AND SIZE	No. OF SIGNS	REMARKS
SC-5	H	C20(CA)	RIGHT LANE CLOSED AHEAD	36" x 36"	(ONE) 4" x 6"	1	STAGE 5A
	I	C20A(CA)	LEFT LANE CLOSED AHEAD	36" x 36"	(ONE) 4" x 6"	1	
	J	SPECIAL A	CROSSWALK CLOSED	18" x 12"	(ONE) 4" x 6"	3	
		R9-3b(L†)	USE -> CROSS WALK	18" x 12"			
	K	SPECIAL A	CROSSWALK CLOSED	18" x 12"	(ONE) 4" x 6"	3	
		R9-3b(R†)	USE -> CROSS WALK	18" x 12"			
SC-6	I	C20A(CA)	LEFT LANE CLOSED AHEAD	36" x 36"	(ONE) 4" x 6"	2	STAGE 5B
	J	SPECIAL A	CROSSWALK CLOSED	18" x 12"	(ONE) 4" x 6"	2	
		R9-3b(L†)	USE -> CROSS WALK	18" x 12"			
	K	SPECIAL A	CROSSWALK CLOSED	18" x 12"	(ONE) 4" x 6"	3	
		R9-3b(R†)	USE -> CROSS WALK	18" x 12"			
SC-7	I	C20A(CA)	LEFT LANE CLOSED AHEAD	36" x 36"	(ONE) 4" x 6"	2	STAGE 5C
	J	SPECIAL A	CROSSWALK CLOSED	18" x 12"	(ONE) 4" x 6"	3	
		R9-3b(L†)	USE -> CROSS WALK	18" x 12"			
	K	SPECIAL A	CROSSWALK CLOSED	18" x 12"	(ONE) 4" x 6"	3	
		R9-3b(R†)	USE -> CROSS WALK	18" x 12"			
SC-8	H	C20(CA)	RIGHT LANE CLOSED AHEAD	36" x 36"	(ONE) 4" x 6"	2	STAGE 6A
	J	SPECIAL A	CROSSWALK CLOSED	18" x 12"	(ONE) 4" x 6"	1	
		R9-3b(L†)	USE -> CROSS WALK	18" x 12"			
	K	SPECIAL A	CROSSWALK CLOSED	18" x 12"	(ONE) 4" x 6"	2	
		R9-3b(R†)	USE -> CROSS WALK	18" x 12"			
	L	SPECIAL C	TRUCK/BUS	18" x 12"	(ONE) 4" x 6"	1	
		R3-1	RIGHT TURN PROHIBITION ARROW	24" x 24"			
		SPECIAL D	AHEAD	18" x 12"			
	M	M4-8	DETOUR	30" x 15"	(ONE) 4" x 6"	1	
		SPECIAL C	TRUCK/BUS	18" x 12"			
		M6-3	UP ARROW	21" x 15"			
	N	M4-8	DETOUR	30" x 15"	(ONE) 4" x 6"	3	
		SPECIAL C	TRUCK/BUS	18" x 12"			
		M6-1(←)	LEFT ARROW	21" x 15"			
	O	M4-8a	END DETOUR	24" x 18"	(ONE) 4" x 4"	1	
SC-9	J	SPECIAL A	CROSSWALK CLOSED	18" x 12"	(ONE) 4" x 6"	1	STAGE 6B
		R9-3b(L†)	USE -> CROSS WALK	18" x 12"			
	K	SPECIAL A	CROSSWALK CLOSED	18" x 12"	(ONE) 4" x 6"	1	
		R9-3b(R†)	USE -> CROSS WALK	18" x 12"			
	L	SPECIAL C	TRUCK/BUS	18" x 12"	(ONE) 4" x 6"	1	
		R3-1	RIGHT TURN PROHIBITION ARROW	24" x 24"			
		SPECIAL D	AHEAD	18" x 12"			
	M	M4-8	DETOUR	30" x 15"	(ONE) 4" x 6"	1	
		SPECIAL C	TRUCK/BUS	18" x 12"			
		M6-3	UP ARROW	21" x 15"			
	N	M4-8	DETOUR	30" x 15"	(ONE) 4" x 6"	3	
		SPECIAL C	TRUCK/BUS	18" x 12"			
		M6-1(←)	LEFT ARROW	21" x 15"			
	O	M4-8a	END DETOUR	24" x 18"	(ONE) 4" x 4"	1	

NOTES

1. NUMBER OF SIGNS PER STAGE CONSTRUCTION.
2. EXACT SIGN LOCATION TO BE DETERMINED BY ENGINEER.
3. SEE CONSTRUCTION AREA SIGNS, DETOUR LAYOUT AND TRAFFIC HANDLING PLANS FOR ADDITIONAL CONSTRUCTION AREA SIGNS.
4. CONSTRUCTION STAGING SIGN SHALL BE REUSED FOR THE NEXT STAGE AFTER THE COMPLETION OF ONE STAGE.
5. QUANTITIES ARE FOR STAGING FEATURES ONLY.

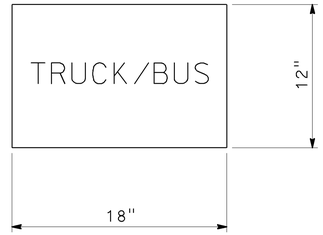

SPECIAL C
(3"CAP)

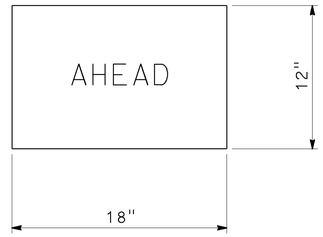

SPECIAL D
(3"CAP)

FOR NOTES, ABBREVIATIONS AND LEGEND, SEE SHEET SCQ-1

STAGE CONSTRUCTION QUANTITIES

SCQ-2

LAST REVISION | DATE PLOTTED => 24-FEB-2010 | TIME PLOTTED => 10:55
02-02-10

CALCULATED-DESIGNED BY: JIANGHONG LI | CHECKED BY: MICHAEL T NGUYEN | REVISED BY: JHL | DATE REVISED: 2/2/10
FUNCTIONAL SUPERVISOR: MICHAEL T NGUYEN
STATE OF CALIFORNIA - DEPARTMENT OF TRANSPORTATION — DESIGN — Caltrans

BORDER LAST REVISED 4/11/2008 | RELATIVE BORDER SCALE IS IN INCHES 0 1 2 3 | USERNAME => s131681 | DGN FILE => 43a990mc002.dgn | CU 04223 | EA 3A9901

Dist	COUNTY	ROUTE	POST MILES TOTAL PROJECT	SHEET No.	TOTAL SHEETS
04	Son	116,12	26.7, 9.2	24	58

2-16-10
REGISTERED CIVIL ENGINEER DATE

2-22-10
PLANS APPROVAL DATE

REGISTERED PROFESSIONAL ENGINEER
Jianghong Li
No. 71954
Exp. 12-31-11
CIVIL
STATE OF CALIFORNIA

THE STATE OF CALIFORNIA OR ITS OFFICERS OR AGENTS SHALL NOT BE RESPONSIBLE FOR THE ACCURACY OR COMPLETENESS OF SCANNED COPIES OF THIS PLAN SHEET.

NOTES

1. NUMBER OF SIGNS PER STAGE CONSTRUCTION.
2. EXACT SIGN LOCATION TO BE DETERMINED BY ENGINEER.
3. SEE CONSTRUCTION AREA SIGNS, DETOUR LAYOUT AND TRAFFIC HANDLING PLANS FOR ADDITIONAL CONSTRUCTION AREA SIGNS.
4. CONSTRUCTION STAGING SIGN SHALL BE REUSED FOR THE NEXT STAGE AFTER THE COMPLETION OF ONE STAGE.
5. QUANTITIES ARE FOR STAGING FEATURES ONLY.

CONSTRUCTION AREA SIGNS (STATIONARY MOUNTED)

SHEET No.	SIGN No.	MUTCD CODE	MESSAGE	PANEL SIZE	No. OFF POST AND SIZE	No. OF SIGNS	REMARKS
SC-10	I	C20A(CA)	LEFT LANE CLOSED AHEAD	36" x 36"	(ONE) 4" x 6"	2	STAGE 6C
	J	SPECIAL A	CROSSWALK CLOSED	18" x 12"	(ONE) 4" x 6"	1	
		R9-3b(Lt)	USE -> CROSS WALK	18" x 12"			
	K	SPECIAL A	CROSSWALK CLOSED	18" x 12"	(ONE) 4" x 6"	1	
		R9-3b(Rt)	USE -> CROSS WALK	18" x 12"			
	L	SPECIAL C	TRUCK/BUS	18" x 12"	(ONE) 4" x 6"	1	
		R3-1	RIGHT TURN PROHIBITION ARROW	24" x 24"			
		SPECIAL D	AHEAD	18" x 12"			
	M	M4-8	DETOUR	30" x 15"	(ONE) 4" x 6"	1	
		SPECIAL C	TRUCK/BUS	18" x 12"			
		M6-3	UP ARROW	21" x 15"			
	N	M4-8	DETOUR	30" x 15"	(ONE) 4" x 6"	3	
		SPECIAL C	TRUCK/BUS	18" x 12"			
		M6-1(←)	LEFT ARROW	21" x 15"			
	O	M4-8a	END DETOUR	24" x 18"	(ONE) 4" x 4"	1	

FOR NOTES, ABBREVIATIONS AND LEGEND, SEE SHEET SCQ-1

STAGE CONSTRUCTION QUANTITIES

SCQ-3

CALCULATED-DESIGNED BY: JIANGHONG LI
CHECKED BY: MICHAEL T NGUYEN
REVISED BY: JHL
DATE REVISED: 2/2/10
FUNCTIONAL SUPERVISOR: MICHAEL T NGUYEN
STATE OF CALIFORNIA - DEPARTMENT OF TRANSPORTATION
DESIGN

LAST REVISION | DATE PLOTTED => 24-FEB-2010
02-02-10 | TIME PLOTTED => 10:54

Dist	COUNTY	ROUTE	POST MILES TOTAL PROJECT	SHEET No.	TOTAL SHEETS
04	Son	116,12	26.7, 9.2	25	58

REGISTERED CIVIL ENGINEER — DATE 2/16/10

Jianghong Li — No. 71954 — Exp. 12-31-11 — CIVIL — REGISTERED PROFESSIONAL ENGINEER — STATE OF CALIFORNIA

2-22-10
PLANS APPROVAL DATE

THE STATE OF CALIFORNIA OR ITS OFFICERS OR AGENTS SHALL NOT BE RESPONSIBLE FOR THE ACCURACY OR COMPLETENESS OF SCANNED COPIES OF THIS PLAN SHEET.

LEGEND

(CW) INSTALL 12'' WHITE CROSS WALK LINES AS SHOWN.

(R) REMOVE EXISTING CROSS WALK STRIPING.

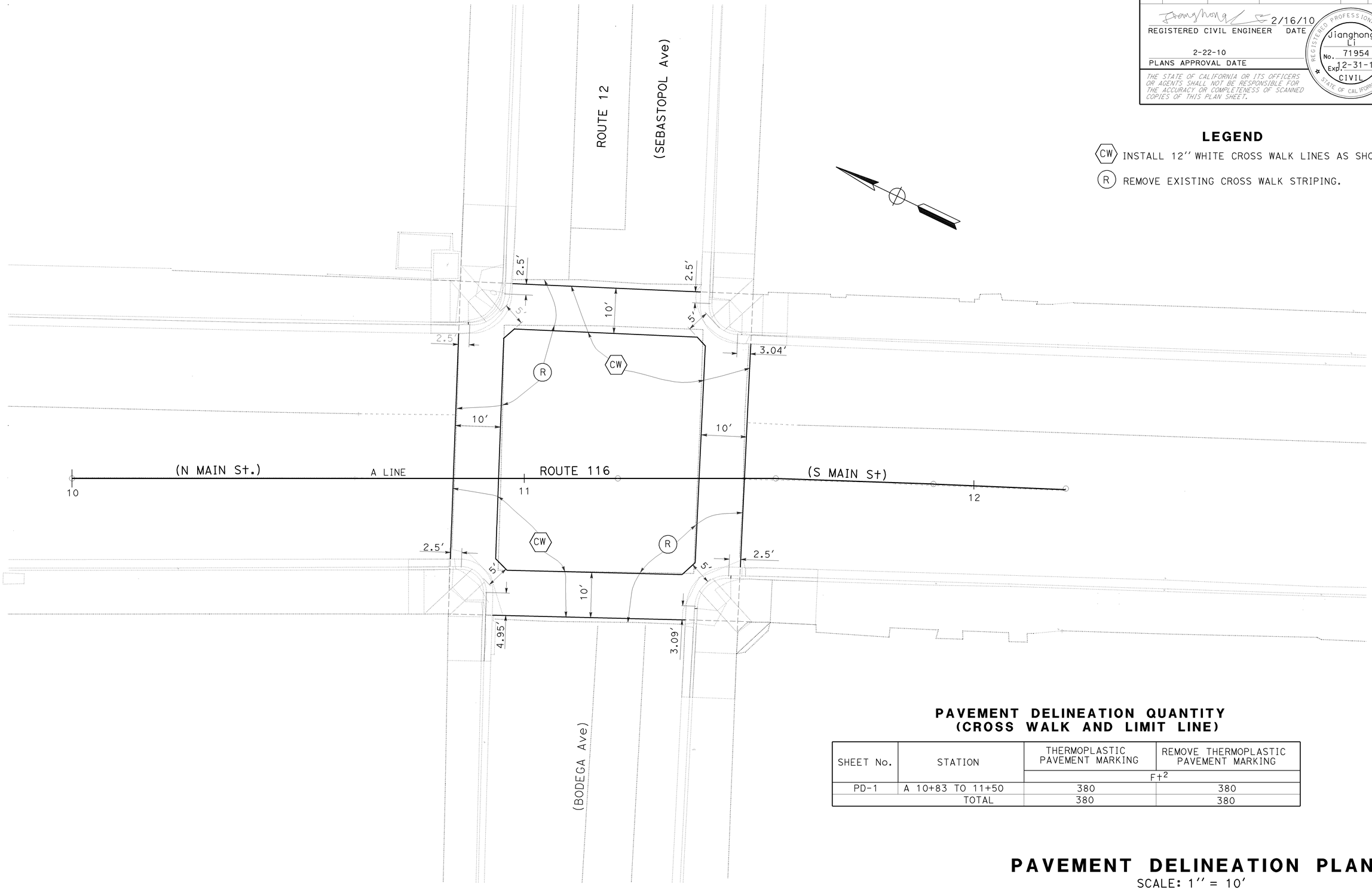

PAVEMENT DELINEATION QUANTITY (CROSS WALK AND LIMIT LINE)

SHEET No.	STATION	THERMOPLASTIC PAVEMENT MARKING	REMOVE THERMOPLASTIC PAVEMENT MARKING
		Ft^2	
PD-1	A 10+83 TO 11+50	380	380
	TOTAL	380	380

PAVEMENT DELINEATION PLAN

SCALE: 1'' = 10'

THIS PLAN ACCURATE FOR PAVEMENT DELINEATION WORK ONLY

PD-1

CALCULATED-DESIGNED BY	JIANGHONG LI	REVISED BY	JHL
CHECKED BY	MICHAEL T NGUYEN	DATE REVISED	2/2/10
FUNCTIONAL SUPERVISOR	MICHAEL T NGUYEN		

STATE OF CALIFORNIA - DEPARTMENT OF TRANSPORTATION — DESIGN

LAST REVISION DATE PLOTTED => 24-FEB-2010
TIME PLOTTED => 10:54
02-02-10

BORDER LAST REVISED 4/11/2008

RELATIVE BORDER SCALE IS IN INCHES 0 1 2 3

USERNAME => s131681
DGN FILE => 43a990na001.dgn

CU 04223

EA 3A9901

Dist	COUNTY	ROUTE	POST MILES TOTAL PROJECT	SHEET No.	TOTAL SHEETS
04	Son	116,12	26.7, 9.2	26	58

2/16/10
REGISTERED CIVIL ENGINEER DATE

2-22-10
PLANS APPROVAL DATE

Jerilyn L. Struven
No. 49964
Exp. 12-31-10
CIVIL
REGISTERED PROFESSIONAL ENGINEER
STATE OF CALIFORNIA

THE STATE OF CALIFORNIA OR ITS OFFICERS OR AGENTS SHALL NOT BE RESPONSIBLE FOR THE ACCURACY OR COMPLETENESS OF SCANNED COPIES OF THIS PLAN SHEET.

LEGEND

(No.)	ROADSIDE SIGN NUMBER
SSBM	STRAP AND SADDLE BRACKET MOUNTED
■	SALVAGE ROADSIDE SIGN
✳	ELECTRICAL ITEM

NOTES

1. EXACT LOCATION AND POSITION OF ROADSIDE SIGNS AND CONSTRUCTION AREA SIGNS TO BE DETERMINED BY THE ENGINEER.
2. POST SIZE AND LENGTH GIVEN ARE APPROXIMATE. EXACT SIZE AND LENGTH TO BE DETERMINED BY THE ENGINEER.

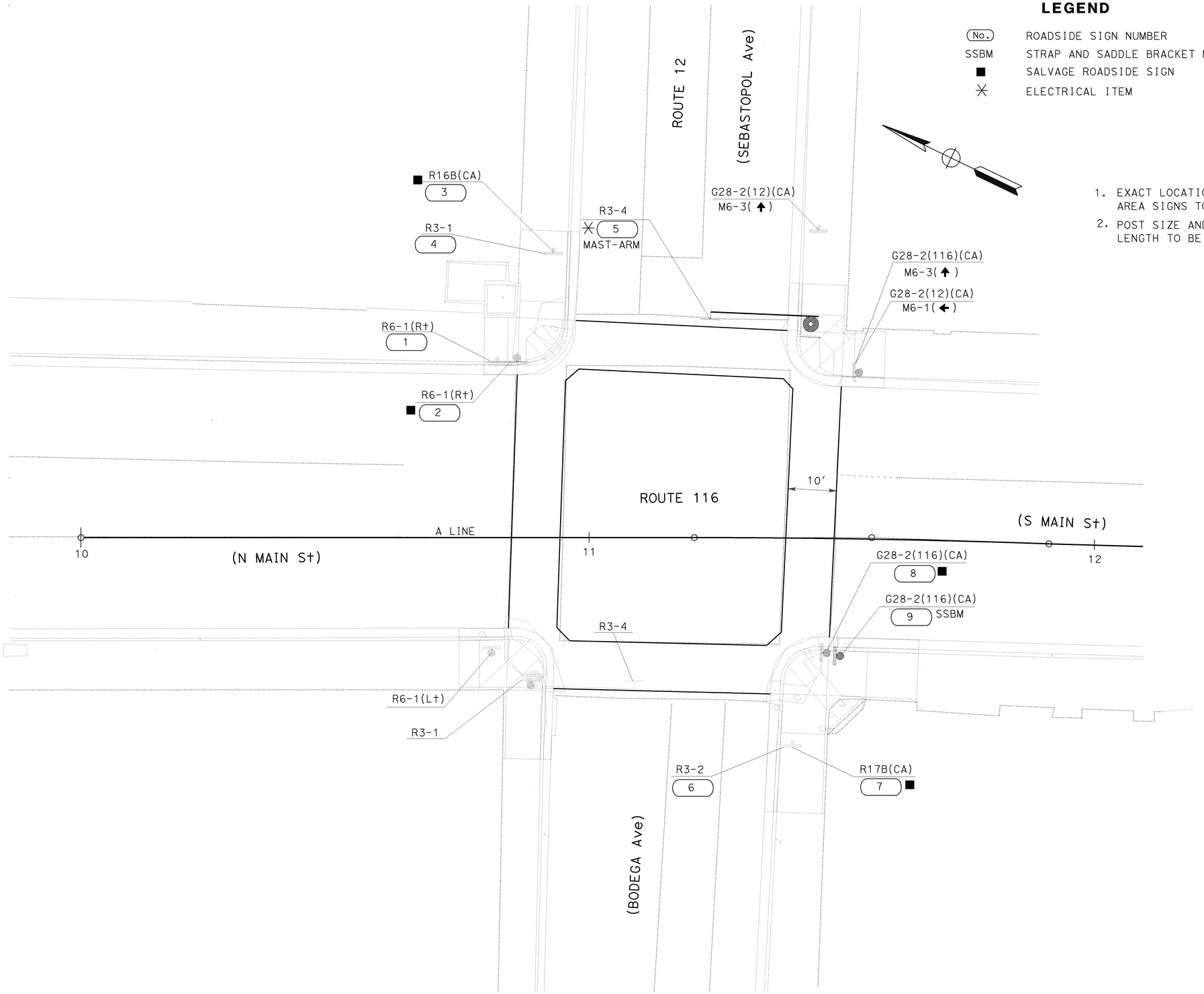

SIGN PLAN
NO SCALE

THIS PLAN ACCURATE FOR SIGN WORK ONLY

S-1

STATE OF CALIFORNIA - DEPARTMENT OF TRANSPORTATION
Caltrans
TRAFFIC

FUNCTIONAL SUPERVISOR: ROLAND AU YEUNG
CALCULATED-DESIGNED BY: HENRY TAM
CHECKED BY: JERILYN L STRUVEN
REVISED BY: HT
DATE REVISED: 2/2/10

LAST REVISION: DATE PLOTTED => 24-FEB-2010 TIME PLOTTED => 10:53
02-02-10

BORDER LAST REVISED 4/11/2008
RELATIVE BORDER SCALE IS IN INCHES 0 1 2 3
USERNAME => s131681
DGN FILE => 43a990oa001.dgn
CU 04223
EA 3A9901

Dist	COUNTY	ROUTE	POST MILES TOTAL PROJECT	SHEET No.	TOTAL SHEETS
04	Son	116,12	26.7, 9.2	27	58

REGISTERED CIVIL ENGINEER — 2/16/10 DATE

Jerilyn L. Struven No. 49964 Exp. 12-31-10 CIVIL — REGISTERED PROFESSIONAL ENGINEER — STATE OF CALIFORNIA

2-22-10
PLANS APPROVAL DATE

THE STATE OF CALIFORNIA OR ITS OFFICERS OR AGENTS SHALL NOT BE RESPONSIBLE FOR THE ACCURACY OR COMPLETENESS OF SCANNED COPIES OF THIS PLAN SHEET.

ROADSIDE SIGN QUANTITIES

SIGN No.	CODE	PANEL SIZE	POST LENGTH				INSTALL ROADSIDE SIGNS			REMOVE ROADSIDE SIGNS		RELOCATED ROADSIDE SIGNS	INSTALL SIGN PANEL ON EXISTING POST	REMOVE ROADSIDE SIGN PANEL	REMARKS
			4''x 4''	4''x 6''	6''x 6''	6''x 8''	ONE POST	TWO POST	SADDLE BRACKET MOUNTED	WOOD POST	SSBM				
			EA												
1	R6-1(R†)	32'' x 12''	11'-6''				1								
2	R6-1(R†)										1				
3	R16B(CA)													1	
4	R3-1	30'' x 30''											1		
5	R3-4	24'' x 24''													*
6	R3-2	30'' x 30''											1		
7	R17B(CA)													1	
8	G28-2(116)(CA)										1				
9	G28-2(116)(CA)	28'' x 25''							1						
TOTAL							1		1		2		2	2	

* = ELECTRICAL ITEM, INSTALL ON MAST-ARM

HENRY TAM — REVISED BY — HT
JERILYN STRUVEN — DATE REVISED — 2/2/10
CALCULATED-DESIGNED BY
CHECKED BY
FUNCTIONAL SUPERVISOR: ROLAND AU YEUNG

STATE OF CALIFORNIA - DEPARTMENT OF TRANSPORTATION
Caltrans®
TRAFFIC

SIGN QUANTITIES

SQ-1

LAST REVISION DATE PLOTTED => 24-FEB-2010
11-23-09 TIME PLOTTED => 10:52

Dist	COUNTY	ROUTE	POST MILES TOTAL PROJECT	SHEET No.	TOTAL SHEETS
04	Son	116,12	26.7, 9.2	28	58

REGISTERED CIVIL ENGINEER — 2/16/10 DATE

Jerilyn L. Struven No. 49964 Exp. 12-31-10 CIVIL — REGISTERED PROFESSIONAL ENGINEER — STATE OF CALIFORNIA

2-22-10
PLANS APPROVAL DATE

THE STATE OF CALIFORNIA OR ITS OFFICERS OR AGENTS SHALL NOT BE RESPONSIBLE FOR THE ACCURACY OR COMPLETENESS OF SCANNED COPIES OF THIS PLAN SHEET.

ABBREVIATIONS

FRP = FIBERGLASS REINFORCED PLASTIC
RSPF = REMOVABLE SIGN PANEL FRAME

SIGN PANEL SUMMARY

SIGN No.	SIGN CODE	PANEL SIZE	SIGN AREA SQFT	SINGLE FACE	DOUBLE FACE	BACKGROUND SHEETING COLOR	BACKGROUND RETROREFLECTIVE ASTM TYPE	LEGEND SHEETING COLOR	LEGEND RETROREFLECTIVE ASTM TYPE	PROTECTIVE OVERLAY STANDARD	PROTECTIVE OVERLAY PREMIUM	ROADSIDE SIGNS SINGLE SHEET FRP 0.136'' SQFT	ROADSIDE SIGNS SINGLE SHEET FRAMED ALUMINUM 0.068'' SQFT	ROADSIDE SIGNS SINGLE SHEET FRAMED ALUMINUM 0.080'' SQFT	ROADSIDE SIGNS SINGLE SHEET UNFRAMED ALUMINUM 0.068'' SQFT	ROADSIDE SIGNS SINGLE SHEET UNFRAMED ALUMINUM 0.080'' SQFT	ROADSIDE SIGNS SINGLE SHEET UNFRAMED ALUMINUM 0.136'' SQFT	ROADSIDE SIGNS LAMINATED 1.0'' TYPE B	ROADSIDE SIGNS LAMINATED 2.5'' TYPE B	ROADSIDE SIGNS LAMINATED 3.5'' TYPE H	ROADSIDE SIGNS FORMED	OVERHEAD LAMINATED TYPE A	OVERHEAD FORMED w/o RSPF	OVERHEAD FORMED w/ RSPF	DESCRIPTION
1	R6-1(Rt)	3' x 1'	3.00	×		WHITE	III	BLACK			X				3.00											ONE WAY SIGN
4	R3-1	2.5' x 2.5'	6.25	×		WHITE	III	R/BLACK			X				6.25											NO RIGHT TURN SYMBOL
5	R3-4	2' x 2'	4.00	×		WHITE	III	R/BLACK			X				4.00											NO U TURN SYMBOL
6	R3-2	2.5' x 2.5'	6.25	×		WHITE	III	R/BLACK			X				6.25											NO LEFT TURN SYMBOL
9	G28-2(116)(CA)	2.3' x 2.1'	4.83	×		GREEN	IV	WHITE	IV		X				4.83											STATE ROUTE SHIELD 116
TOTAL															24.33											

CALIFORNIA SIGN CODES ARE DESIGNATED BY (CA) . OTHERWISE FEDERAL CODES ARE SHOWN.

QUANTITIES
CONTRACTOR FURNISHED SIGNS

SQ-2

CALCULATED-DESIGNED BY: HENRY TAM
CHECKED BY: JERILYN STRUVEN
REVISED BY: HT
DATE REVISED: 2/2/10
FUNCTIONAL SUPERVISOR: ROLAND AU YEUNG

STATE OF CALIFORNIA - DEPARTMENT OF TRANSPORTATION
Caltrans
TRAFFIC

LAST REVISION | DATE PLOTTED => 24-FEB-2010 | TIME PLOTTED => 10:52 | 12-22-09

Dist	COUNTY	ROUTE	POST MILES TOTAL PROJECT	SHEET No.	TOTAL SHEETS
04	Son	116,12	26.7, 9.2	29	58

REGISTERED CIVIL ENGINEER — DATE 2/16/10

2-22-10
PLANS APPROVAL DATE

REGISTERED PROFESSIONAL ENGINEER — Jianghong Li — No. 71954 — Exp. 12-31-11 — CIVIL — STATE OF CALIFORNIA

THE STATE OF CALIFORNIA OR ITS OFFICERS OR AGENTS SHALL NOT BE RESPONSIBLE FOR THE ACCURACY OR COMPLETENESS OF SCANNED COPIES OF THIS PLAN SHEET.

ROADWAY QUANTITIES

SHEET No.	STATION LIMITS	REMOVE CONCRETE	MINOR CONCRETE (CURB, SIDEWALK AND CURB RAMP)	HOT MIX ASPHALT (TYPE A)	TACK COAT	CLASS 4 AGGREGATE SUBBASE	CLASS 3 AGGREGATE BASE	ROADWAY EXCAVATION	CURB RAMP DETECTABLE WARNING SURFACE (N)
		CY		TON		CY			EA
C-2, SC-1	R† A 11+34 TO 12+43	8.3	12.0	9.4	0.25	31	46.2	109.7	1
C-2, SC-2	R† A 10+74 TO 10+94	5.9	8.2	1.9	0.05	12	14.7	42.8	1
C-1, SC-3	L† A 11+38 TO 11+58	4.4	6.1				5.8	8.2	1
C-1, SC-4	L† A 10+79 TO 10+98	5.5	7.7				7.4	10.5	1
SC-5, 6, 7	R† A 10+94 TO 11+34			7.5	0.20	11	14.8	29.4	
TOTAL		24.1	34.0	18.8	0.50	54	88.9	200.6	4

(N) = NOT A PAY ITEM, FOR INFORMATION ONLY

CALCULATED-DESIGNED BY: JIANGHONG LI
CHECKED BY: MICHAEL T NGUYEN
REVISED BY: JHL
DATE REVISED: 2/2/10
FUNCTIONAL SUPERVISOR: MICHAEL T NGUYEN

STATE OF CALIFORNIA - DEPARTMENT OF TRANSPORTATION
Caltrans®
DESIGN

SUMMARY OF QUANTITIES

Q-1

LAST REVISION: DATE PLOTTED => 24-FEB-2010
02-02-10 TIME PLOTTED => 10:51

BORDER LAST REVISED 4/11/2008

RELATIVE BORDER SCALE IS IN INCHES 0 1 2 3

USERNAME => s131681
DGN FILE => 43a990pa001.dgn

CU 04223

EA 3A9901

FOR ACCURATE RIGHT OF WAY AND
ACCESS DATA, CONTACT RIGHT OF WAY
ENGINEERING AT THE DISTRICT OFFICE.

NOTES

1. INSTALL 2''C, 1 DLC.
2. EXISTING 1½''C, 2 dlc.
3. REPLACE EXISTING PULL BOX AND ADJUST TO NEW GRADE.
4. EXISTING CITY ELECTOLIER TO REMAIN.
5. EXISTING 1½''C, 3 dlc, 1 sic. RC sic AND INSTALL NEW 1 SIC TO CONTROLLER AT MCKINLEY AND NORTH MAIN STREET.
6. EXISTING 2''C, 3 dlc, 1 sic. RC sic AND INSTALL NEW 1 SIC.
7. EXISTING 2''C, 3 dlc, 1 sic. RC sic AND INSTALL NEW 3 DIC, 1 SIC.
8. ADD DETECTOR SENSOR UNITS AS NECESSARY.
9. ADJUST PULL BOX TO NEW GRADE AS NECESSARY.
10. INSTALL TYPE III-AF SERVICE EQUIPMENT ENCLOSURE. INSTALL EQUIPMENT ITEMS (1) THROUGH (10), (15), (16), (17), AND (21). SEE E-3.

STEADY DEMAND SEQUENCE

EXISTING PHASE DIAGRAM
NO CHANGE

Dist	COUNTY	ROUTE	POST MILES TOTAL PROJECT	SHEET No.	TOTAL SHEETS
04	Son	116,12	26.7, 9.2	30	58

Elaine Wong 2/16/10
REGISTERED ELECTRICAL ENGINEER DATE

2-22-10
PLANS APPROVAL DATE

REGISTERED PROFESSIONAL ENGINEER — Elaine T. Wong — No. 13753 — Exp 6-30-11 — ELEC — STATE OF CALIFORNIA

THE STATE OF CALIFORNIA OR ITS OFFICERS OR AGENTS SHALL NOT BE RESPONSIBLE FOR THE ACCURACY OR COMPLETENESS OF SCANNED COPIES OF THIS PLAN SHEET.

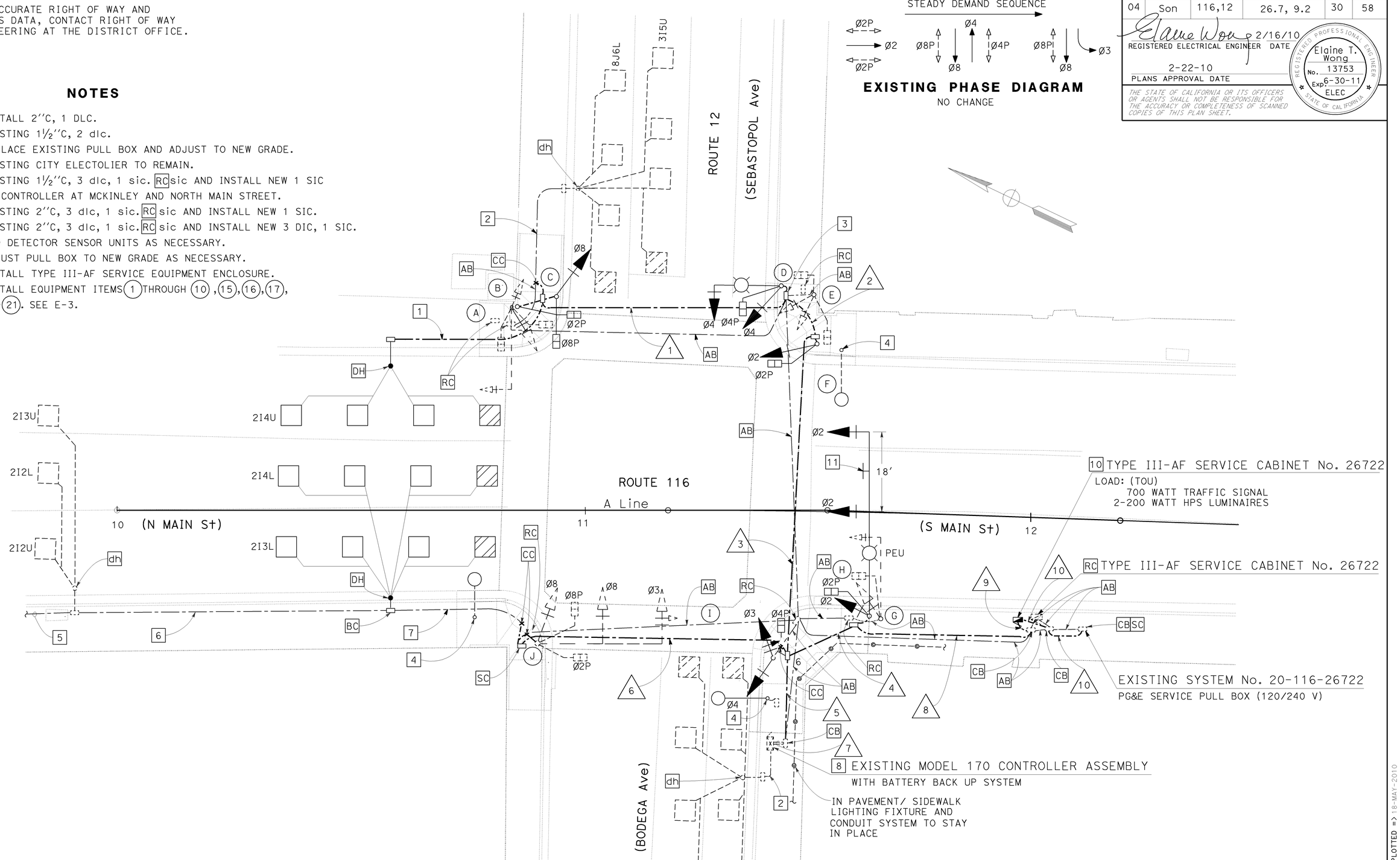

10 TYPE III-AF SERVICE CABINET No. 26722
LOAD: (TOU)
700 WATT TRAFFIC SIGNAL
2-200 WATT HPS LUMINAIRES

RC TYPE III-AF SERVICE CABINET No. 26722

EXISTING SYSTEM No. 20-116-26722
PG&E SERVICE PULL BOX (120/240 V)

8 EXISTING MODEL 170 CONTROLLER ASSEMBLY
WITH BATTERY BACK UP SYSTEM

IN PAVEMENT/ SIDEWALK LIGHTING FIXTURE AND CONDUIT SYSTEM TO STAY IN PLACE

SIGNAL AND LIGHTING

SCALE: 1'' = 10'

E-1

THIS PLAN IS ACCURATE FOR ELECTRICAL WORK ONLY

REVISED BY	DATE REVISED
JC	2/2/10

CALCULATED-DESIGNED BY: JESSIE CABUGAO
CHECKED BY: ELAINE WONG
FUNCTIONAL SUPERVISOR: ELAINE WONG

STATE OF CALIFORNIA - DEPARTMENT OF TRANSPORTATION
ELECTRICAL

LAST REVISION DATE PLOTTED => 18-MAY-2010
TIME PLOTTED => 09:12
01-20-10

BORDER LAST REVISED 4/11/2008

RELATIVE BORDER SCALE IS IN INCHES 0 1 2 3

USERNAME => s131681
DGN FILE => 43a990ua001.dgn

CU 04223

EA 3A9901

CONDUCTOR SCHEDULE

CONDUCTOR DESIGNATION	NUMBER OF CONDUCTORS — RUN NUMBER 1	2	3	4	5	6	7	8	9	10	11
No. 14 CONDUCTORS											
Ø2			3	3	6		6				
Ø3					3	3	3				
Ø4		3	3		6		6				
Ø8	3	3	3		6	3	6				
Ø2P	2	2	2	2	2	2	2				
Ø4P		2	2		2		2				
Ø8P	2	2	2		2	2	2				
PPB Ø2	1	1	1	1	1	1	1				
PPB Ø4			1		1		1				
PPB Ø8	1	1	1		1	1	1				
PPB NEUTRAL	1	1	1	1	2	1	2				
PEU				3				3	3		
SPARES	3	3	3		6	3	6				
TOTAL No. 14 CONDUCTORS	13	18	21	10	38	16	38	3	3		
DETECTOR CABLES											
2I2U					1	1	1				
2I2L					1	1	1				
2I3U					1	1	1				
2I3L					1	1	1				
2I4U	1	1	1		1	1	1				
2I4L					1	1	1				
3I5U	1	1	1		1						
4I6U											
4I6L											
8J6L	1	1	1		1						
TOTAL CABLES	3	3	3		7	6	6				
No. 8 CONDUCTORS											
LIGHTING				2				2	2		
SIGNAL NEUTRAL	1	1	1	1	2	1	2				
TOTAL No. 8 CONDUCTORS	1	1	1	3	2	1	2	2	2		
No. 6 CONDUCTORS											
SERVICE TO CONTROLLER				2	2		2	2	2		
TOTAL No. 6 CONDUCTORS				2	2		2	2	2		
SIC					1	1	1				
No. 2 SERVICE CONDUCTOR										3	
CONDUIT SIZE (INCHES)	3	2½	3	2½	3	3	2-3/4" E	2	2	3	

POLE AND EQUIPMENT SCHEDULE

LOCATION	STANDARD TYPE	SIG. MA (FEET)	LUM. MA (FEET)	VEH. SIGNAL MOUNTING MAST ARM	VEH. SIGNAL MOUNTING POLE	PED SIGNAL MOUNTING	PPB Ø	HPS LUMINAIRE (WATTS)	SPECIAL REQUIREMENT *
Ⓐ	16-1-70 (EXISTING)	25		MAS	SV-2-T	SP-2-T	←		RC POLE. RS SIGNAL EQUIPMENT.
Ⓑ	1-B					TP-1-T	←		
Ⓒ	1-B				TV-1-T	SP-1-T	→		
Ⓓ	17-3-100	15	12	MAS	SV-1-T	SP-1-T	←	200	INSTALL MAST-ARM MOUNTED SIGN, R 3-4
Ⓔ	15(MODIFIED) (EXISTING)				TV-2-T	SP-2-T	← →		RC POLE. RS SIGNAL EQUIPMENT.
Ⓕ	1-B				TV-1-T	SP-1-T	←		
Ⓖ	16-1-70 (EXISTING)	20		MAS	SV-1-T	SP-1-T	←		RC
Ⓗ	26-4-100	40	15	MAS MAS	SV-1-T	SP-1-T	←	200	INSTALL MAST-ARM MOUNTED SIGN
Ⓘ	1-B				TV-2-T	SP-1-T	→ ←		RS POLE AND SIGNAL EQUIPMENT. NEW POLE ON EXISTING FOUDATION.
Ⓙ	18-3-70 (EXISTING)	25		MAS MAT	SV-1-T	SP-2-T	→		

* *OTHER REQUIREMENTS ARE COVERED BY NOTES, LEGEND, SPECIAL PROVISIONS, AND STANDARD SPECIFICATIONS. FOR TYPE OF STANDARD, VEHICLE AND PEDESTRIAN SIGNAL MOUNTING, SEE STANDARD PLANS.*

Dist	COUNTY	ROUTE	POST MILES TOTAL PROJECT	SHEET No.	TOTAL SHEETS
04	Son	116,12	26.7, 9.2	31	58

Elaine Wong 2/16/10
REGISTERED ELECTRICAL ENGINEER DATE

2-22-10
PLANS APPROVAL DATE

REGISTERED PROFESSIONAL ENGINEER — Elaine T. Wong — No. 13753 — Exp 6-30-11 — ELEC — STATE OF CALIFORNIA

THE STATE OF CALIFORNIA OR ITS OFFICERS OR AGENTS SHALL NOT BE RESPONSIBLE FOR THE ACCURACY OR COMPLETENESS OF SCANNED COPIES OF THIS PLAN SHEET.

JC 2/2/10 — REVISED BY / DATE REVISED
JESSIE CABUGAO / ELAINE WONG — CALCULATED-DESIGNED BY / CHECKED BY
ELAINE WONG — FUNCTIONAL SUPERVISOR
STATE OF CALIFORNIA - DEPARTMENT OF TRANSPORTATION — ELECTRICAL — Caltrans®

SIGNAL AND LIGHTING
(CONDUCTOR, POLE AND EQUIPMENT SCHEDULES)

E-2

LAST REVISION 01-11-10 — DATE PLOTTED => 24-FEB-2010 — TIME PLOTTED => 10:50

BORDER LAST REVISED 4/11/2008 — RELATIVE BORDER SCALE IS IN INCHES 0 1 2 3 — USERNAME => s131681 — DGN FILE => 43a990ua002.dgn — CU 04223 — EA 3A9901

Dist	COUNTY	ROUTE	POST MILES TOTAL PROJECT	SHEET No.	TOTAL SHEETS
04	Son	116,12	26.7, 9.2	32	58

Elaine Wong 2/16/10
REGISTERED ELECTRICAL ENGINEER DATE

2-22-10
PLANS APPROVAL DATE

REGISTERED PROFESSIONAL ENGINEER — Elaine T. Wong — No. 13753 — Exp. 6-30-11 — ELEC — STATE OF CALIFORNIA

THE STATE OF CALIFORNIA OR ITS OFFICERS OR AGENTS SHALL NOT BE RESPONSIBLE FOR THE ACCURACY OR COMPLETENESS OF SCANNED COPIES OF THIS PLAN SHEET.

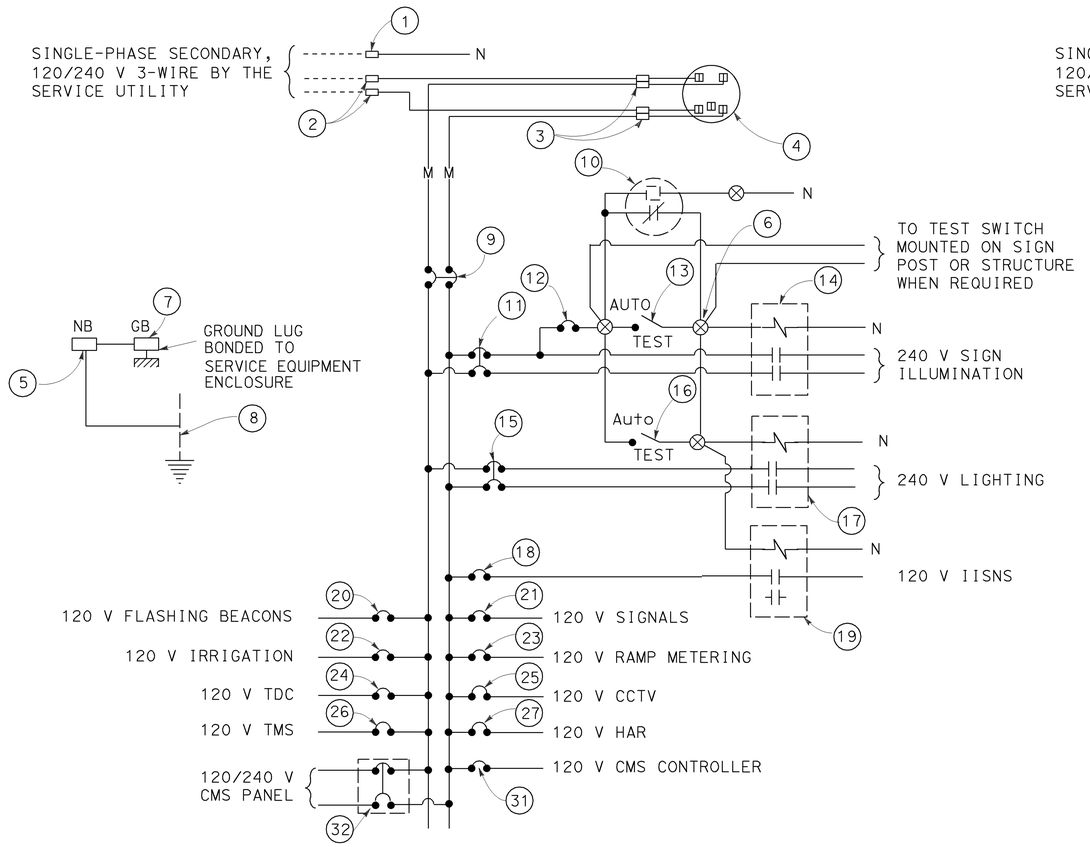

120/240 V SERVICE WIRING DIAGRAM (TYPICAL)

(FOR CIRCUITS WITH BOTH SIGN ILLUMINATION AND LIGHTING)

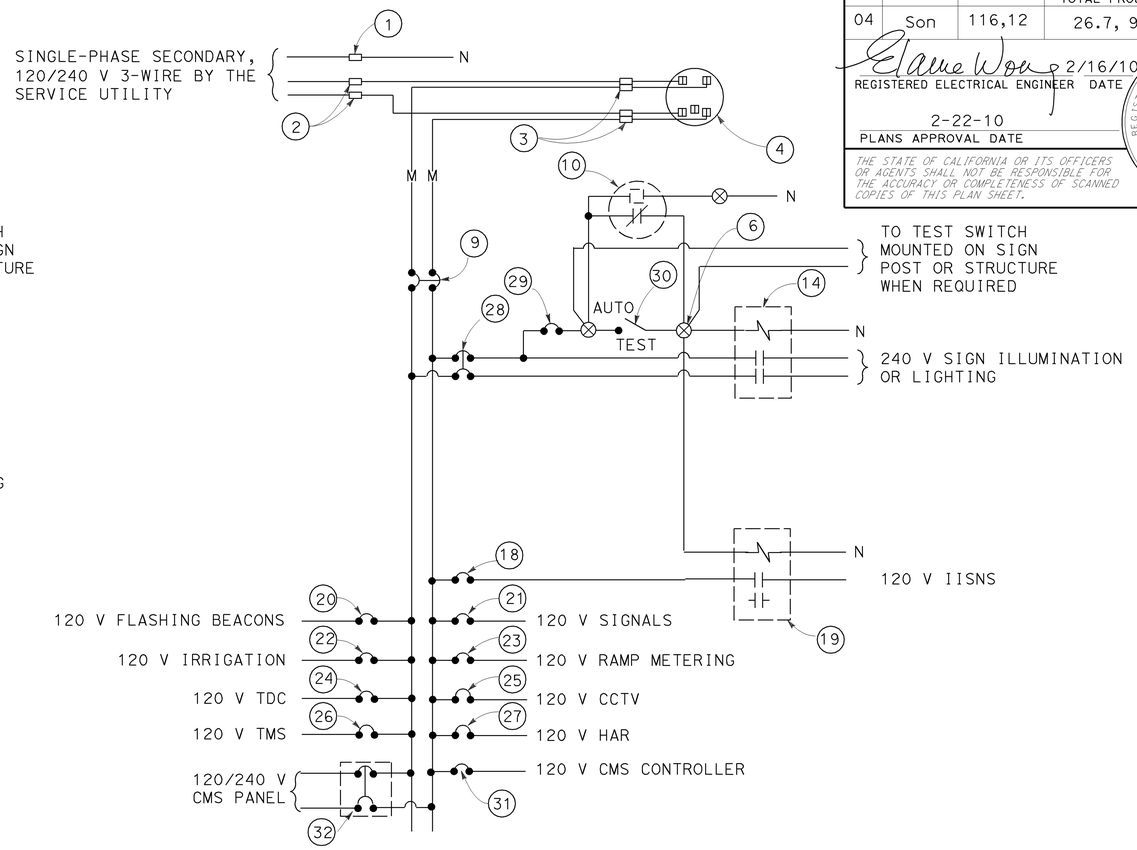

120/240 V SERVICE WIRING DIAGRAM (TYPICAL)

(FOR CIRCUIT ONLY WITH SIGN ILLUMINATION OR LIGHTING)

TYPE III-A SERVICE (120/240 V) EQUIPMENT LEGEND

ITEM No.	COMPONENT	NAMEPLATE DESCRIPTION
1	NEUTRAL LUG	
2	LANDING LUG	
3	TEST BYPASS FACILITY	
4	METER SOCKET AND SUPPORT	
5	NEUTRAL BUS	
6	TERMINAL BLOCK	
7	GROUND BUS	
8	GROUNDING ELECTRODE	
9	100 A, 240 V, 2P, CB	MAIN BREAKER
10	PHOTOELECTRIC UNIT (NOTE 7)	
11	30 A, 240 V, 2P, CB	SIGN ILLUMINATION
12	15 A, 120 V, 1P, CB	SIGN ILLUMINATION AND LIGHTING CONTROL
13	15 A, 1P, TEST SWITCH	SIGN ILLUMINATION TEST SWITCH
14	30 A, 2PNO, CONTACTOR	SIGN ILLUMINATION
15	30 A, 240 V, 2P, CB	LIGHTING
16	15 A, 1P, TEST SWITCH	LIGHTING TEST SWITCH

ITEM No.	COMPONENT	NAMEPLATE DESCRIPTION
17	30 A, 2PNO, CONTACTOR	LIGHTING
18	15 A, 120 V, 1P, CB	IISNS
19	30 A, 2PNO, CONTACTOR	IISNS
20	15 A, 120 V, 1P, CB	FLASHING BEACON
21	50 A, 120 V, 1P, CB	SIGNALS
22	20 A, 120 V, 1P, CB	IRRIGATION
23	30 A, 120 V, 1P, CB	RAMP METERING
24	15 A, 120 V, 1P, CB	TELEPHONE DEMARCATION CABINET
25	30 A, 120 V, 1P, CB	CCTV
26	30 A, 120 V, 1P, CB	TMS
27	30 A, 120 V, 1P, CB	HAR
28	30 A, 240 V, 2P, CB	SIGN ILLUMINATION *
29	15 A, 120 V, 1P, CB	SIGN ILLUMINATION CONTROL *
30	15 A, 1P, TEST SWITCH	SIGN ILLUMINATION TEST SWITCH *
31	30 A, 120 V, 1P, CB	CMS CONTROLLER
32	30 A, 240 V, 2P, CB	CMS PANEL

* FOR LIGHTING CIRCUIT, WORDS OF "SIGN ILLUMINATION" IN NAMEPLATE DESCRIPTION SHALL BE CHANGED TO "LIGHTING".

LEGEND

(SEE ES-1A & ES-1C)

NOTES: (FOR SERVICE EQUIPMENT)

1. VOLTAGE RATINGS OF SERVICE EQUIPMENT SHALL CONFORM TO THE SERVICE VOLTAGES INDICATED ON THE PLANS.
2. UNLESS OTHERWISE INDICATED ON THE PLANS, ALL SERVICE EQUIPMENT ITEMS SHALL BE PROVIDED FOR EACH SERVICE EQUIPMENT ENCLOSURE AS SHOWN.
3. ITEM No. (1) AND (5) SHALL BE ISOLATED FROM THE CABINET.
4. METER SOCKETS SHALL BE 5 CLIP TYPE.
5. SERVICE UTILITY WILL INSTALL THE TIME-OF-USE METER IF APPLICABLE
6. UNLESS OTHERWISE NOTED, NO MORE THAN FOURTEEN 1P, CB CAN BE INSTALLED IN THE ENCLOSURE.
7. PHOTOELECTRIC CONTROL SHALL BE TYPE II.

ELECTRICAL DETAILS
(SERVICE EQUIPMENT AND TYPICAL WIRING DIAGRAM TYPE III-A SERIES)

NO SCALE

E-3

CALCULATED-DESIGNED BY	CHECKED BY	REVISED BY	DATE REVISED
JESSIE CABUGAO	ELAINE WONG	JC	2/2/10

FUNCTIONAL SUPERVISOR: ELAINE WONG

STATE OF CALIFORNIA - DEPARTMENT OF TRANSPORTATION — ELECTRICAL

Caltrans

LAST REVISION — DATE PLOTTED => 24-FEB-2010 — TIME PLOTTED => 10:49 — 12-07-09

DIST	COUNTY	ROUTE	POST MILES TOTAL PROJECT	SHEET NO.	TOTAL SHEETS
04	Son	116,12	26.7, 9.2	33	58

REGISTERED CIVIL ENGINEER

November 17, 2006
PLANS APPROVAL DATE

REGISTERED PROFESSIONAL ENGINEER — Michael Janzen — No. 44788 — Exp. 03-31-08 CIVIL — STATE OF CALIFORNIA

The State of California or its officers or agents shall not be responsible for the accuracy or completeness of electronic copies of this plan sheet.

To accompany plans dated 2-22-10

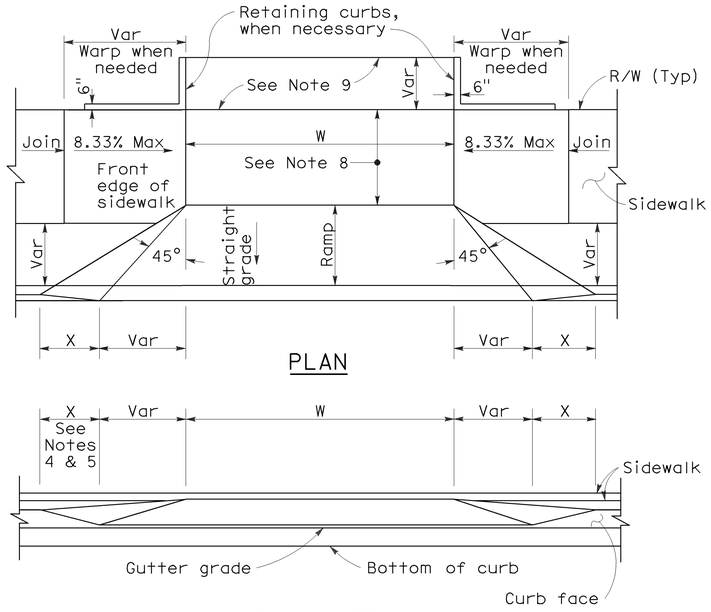

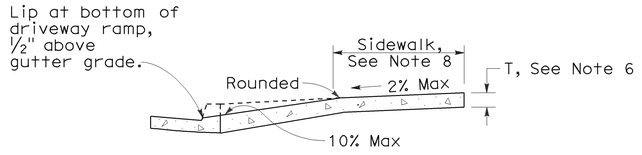

CASE A

Typical driveway, sidewalk not depressed

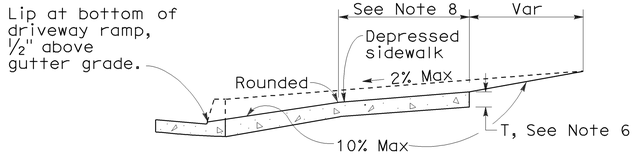

CASE B

Driveway with depressed sidewalk

SECTIONS

CURB QUANTITIES

TYPE	CUBIC YARDS PER LINEAR FOOT
A1-6	0.02585
A1-8	0.03084
A2-6	0.05903
A2-8	0.06379
A3-6	0.01036
A3-8	0.01435
B1-4	0.02185
B1-6	0.02930
B2-4	0.05515
B2-6	0.06171
B3-4	0.00641
B3-6	0.01074
B4	0.05709
D-4	0.04083
D-6	0.06804
E	0.06661

TABLE A

CURB TYPE	DIMENSIONS "H1"	"H2"	"W1"	"W2"
A1-6	1′-2"	6"	7½"	1½"
A1-8	1′-4"	8"	8"	2"
A2-6	1′-0"	6"	2′-7½"	1½"
A2-8	1′-2"	8"	2′-8"	2"
A3-6	6"	5"	7¼"	1¼"
A3-8	8"	7"	7¾"	1¾"
B1-4	1′-0"	4"	7½"	2½"
B1-6	1′-2"	6"	9"	4"
B2-4	10"	4"	2′-7½"	2½"
B2-6	1′-0"	6"	2′-9"	4"
B3-4	4"	3"	7"	2"
B3-6	6"	5"	8½"	3½"
D-4	10"	4"	1′-6"	1′-1"
D-6	1′-0"	6"	2′-2"	1′-8"

DRIVEWAYS

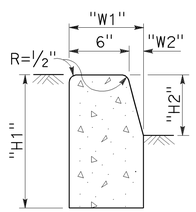

TYPE A1 CURBS

See Table A

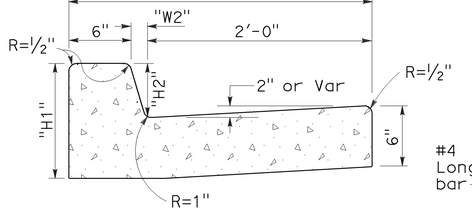

TYPE A2 CURBS

See Table A

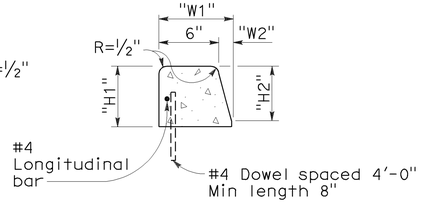

TYPE A3 CURBS

Superimposed on existing pavement
See Table A

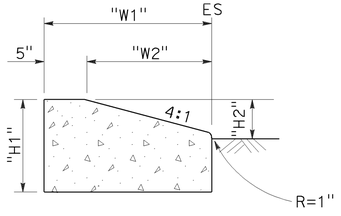

TYPE D CURBS

See Table A

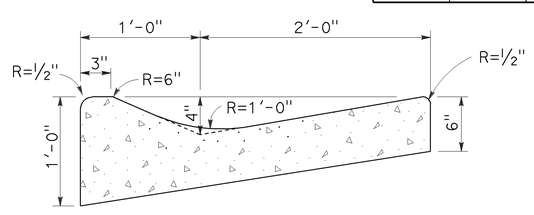

TYPE E CURB

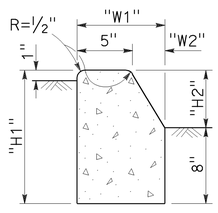

TYPE B1 CURBS

See Table A

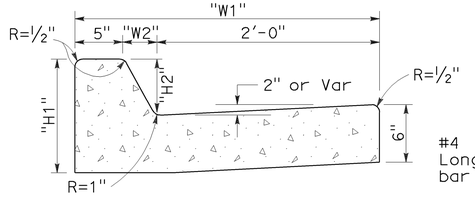

TYPE B2 CURBS

See Table A

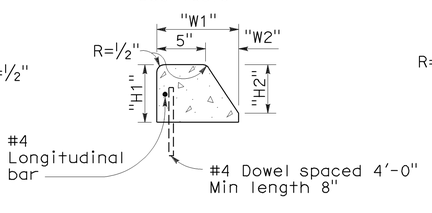

TYPE B3 CURBS

Superimposed on existing pavement
See Table A

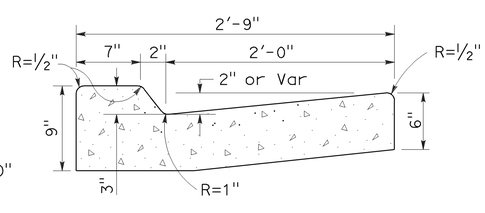

TYPE B4 CURBS

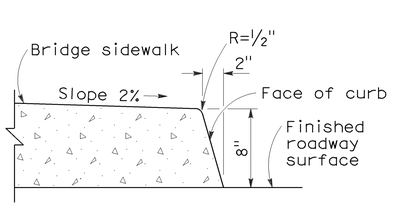

TYPE H CURB

On Bridges

NOTES:

1. Case A driveway section typically applies.
2. Use Case B driveway section when ramp slopes would exceed 10% in Case A.
3. Use Case B driveway section when sidewalk cross slope would exceed 2% in Case A.
4. X=3′-0" except for curb heights over 10" where 4:1 slopes shall be used on curb slope.

CURBS

5. X is a variable when sidewalk is located where wheelchairs may traverse the surface. Slopes shall not exceed 8.33%.
6. Sidewalk and ramp thickness "T" at driveway shall be 4" for residental and 6" for commercial.
7. Difference in slope of the driveway ramp and the slope of a line between the gutter and a point on the roadway 5′-0" from gutter line shall not exceed 15%. Reduce driveway ramp slope, not gutter slope, where required.
8. Minimum width of clear passageway for sidewalk shall be 4′-0".
9. Retaining curbs and acquisition of construction easement may be necessary for narrow sidewalks or curb heights in excess of 6".
10. Across the pedestrian route at curb ramp locations, the gutter pan slope shall not exceed 1" of depth for each 2′-0" of width.

STATE OF CALIFORNIA
DEPARTMENT OF TRANSPORTATION

CURBS AND DRIVEWAYS

NO SCALE

RSP A87A DATED NOVEMBER 17, 2006 SUPERSEDES STANDARD PLAN A87A
DATED MAY 1, 2006 - PAGE 113 OF THE STANDARD PLANS BOOK DATED MAY 2006.

REVISED STANDARD PLAN RSP A87A

2006 REVISED STANDARD PLAN RSP A87A

10-25-06

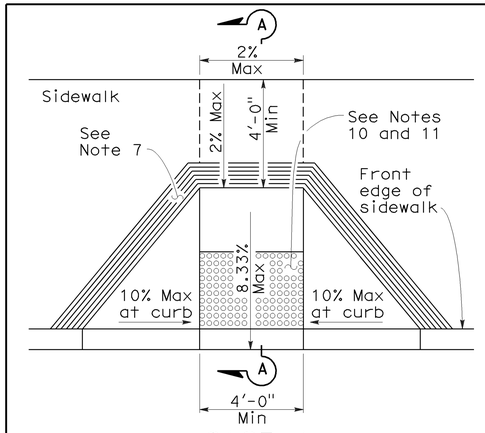

CASE A

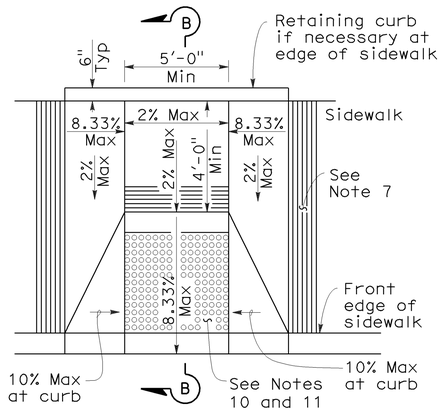

CASE B

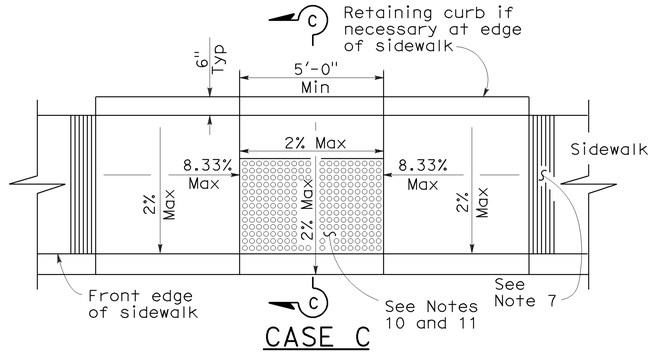

CASE C

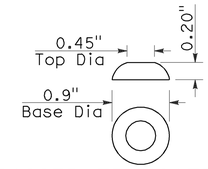

RAISED TRUNCATED DOME

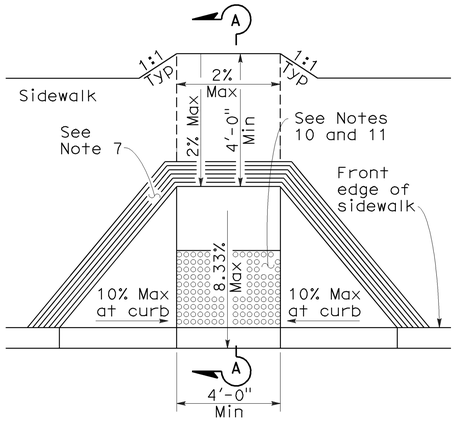

CASE D

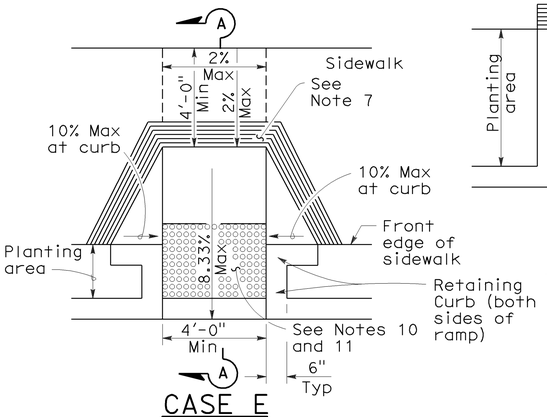

CASE E

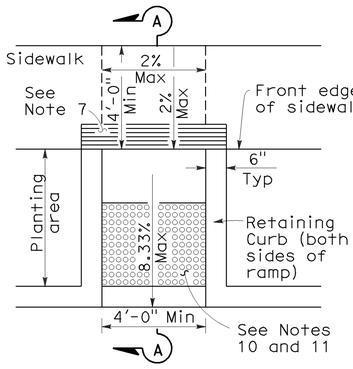

CASE F

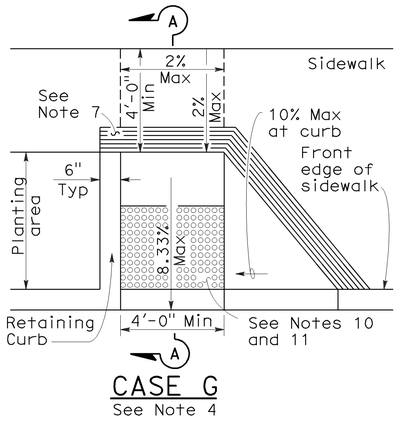

CASE G
See Note 4

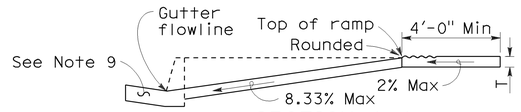

SECTION A-A

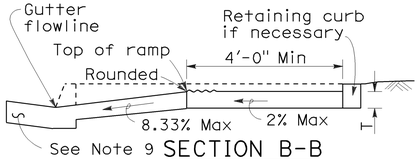

SECTION B-B

Depress entire sidewalk as required

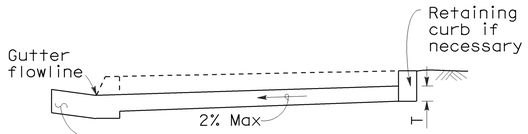

SECTION C-C

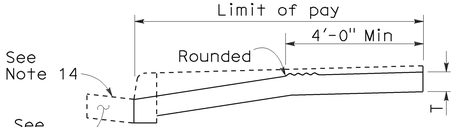

RETROFIT DETAIL

Existing curb and sidewalk

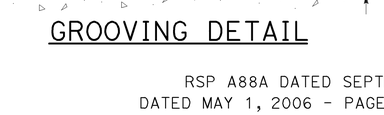

GROOVING DETAIL

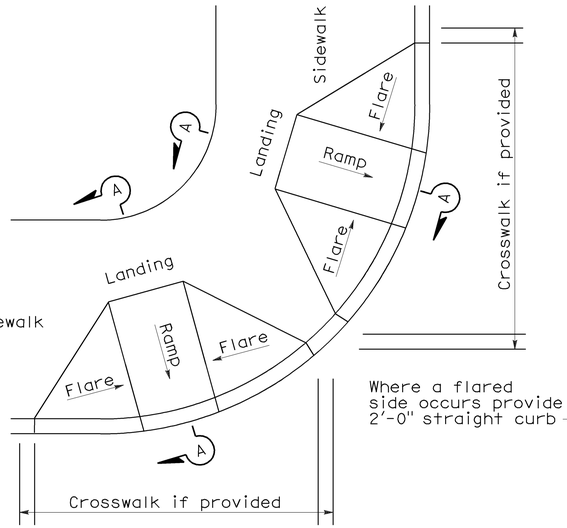

DETAIL A

TYPICAL TWO-RAMP CORNER INSTALLATION

See Note 1

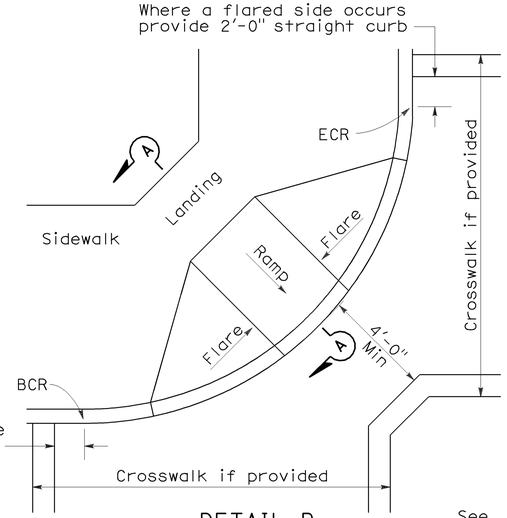

DETAIL B

TYPICAL ONE-RAMP CORNER INSTALLATION

See Notes 1 and 3

NOTES:

1. As site conditions dictate, Case A through Case G curb ramps may be used for corner installations similar to those shown in Detail A and Detail B. The case of curb ramps used in Detail A do not have to be the same. Case A through Case G curb ramps also may be used at mid block locations, as site conditions dictate.
2. If distance from curb to back of sidewalk is too short to accommodate ramp and 4'-0" platform (landing) as shown in Case A, the sidewalk may be depressed longitudinally as in Case B, or C or may be widened as in Case D.
3. When ramp is located in center of curb return, crosswalk configuration must be similar to that shown for Detail B.
4. As site conditions dictate, the retaining curb side and the flared side of the Case G ramp shall be constructed in reversed position.
5. If located on a curve, the sides of the ramp need not be parallel, but the minimum width of the ramp shall be 4'-0".
6. Side slope of ramp flares vary uniformly from a maximum of 10% at curb to conform with longitudinal sidewalk slope adjacent to top of the ramp, except in Case C and Case F.
7. The curb ramp shall be outlined, as shown, with a 1'-0" wide border with 1/4" grooves approximately 3/4" on center. See grooving detail.
8. Transitions from ramps and landing to walks, gutters or streets shall be flush and free of abrupt changes.
9. Maximum slopes of adjoining gutters, the road surface immediately adjacent to the curb ramp or accessible route shall not exceed 5 percent within 4'-0" of the top and bottom of the curb ramp.
10. Curb ramps shall have a detectable warning surface that extends the full width and 3'-0" depth of the ramp. Detectable Warning Surfaces shall conform to the details on this plan and the requirements in the Special Provisions.
11. The edge of the detectable warning surface nearest the street shall be between 6" and 8" from the gutter flowline.
12. Sidewalk and ramp thickness, "T", shall be 3½" minimum.
13. Utility pull boxes, manholes, vaults and all other utility facilities within the boundaries of the curb ramp will be relocated or adjusted to grade by the owner prior to, or in conjunction with, curb ramp construction.
14. For retrofit conditions, removal and replacement of curb apron will be at the Contractor's option, unless otherwise shown on project plans.

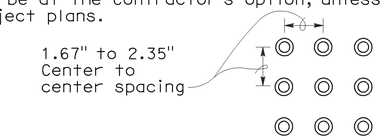

RAISED TRUNCATED DOME PATTERN (IN-LINE)

DETECTABLE WARNING SURFACE

See Note 10

DIST	COUNTY	ROUTE	POST MILES TOTAL PROJECT	SHEET NO.	TOTAL SHEETS
04	Son	116,12	26.7, 9.2	34	58

H. David Cordova
REGISTERED CIVIL ENGINEER

September 1, 2006
PLANS APPROVAL DATE

REGISTERED PROFESSIONAL ENGINEER — Hector David Cordova — No. C41957 — Exp. 3-31-08 CIVIL — STATE OF CALIFORNIA

The State of California or its officers or agents shall not be responsible for the accuracy or completeness of electronic copies of this plan sheet.

To accompany plans dated 2-22-10

STATE OF CALIFORNIA
DEPARTMENT OF TRANSPORTATION

CURB RAMP DETAILS

NO SCALE

RSP A88A DATED SEPTEMBER 1, 2006 SUPERSEDES STANDARD PLAN A88A
DATED MAY 1, 2006 - PAGE 115 OF THE STANDARD PLANS BOOK DATED MAY 2006.

REVISED STANDARD PLAN RSP A88A

2006 REVISED STANDARD PLAN RSP A88A

8-3-06

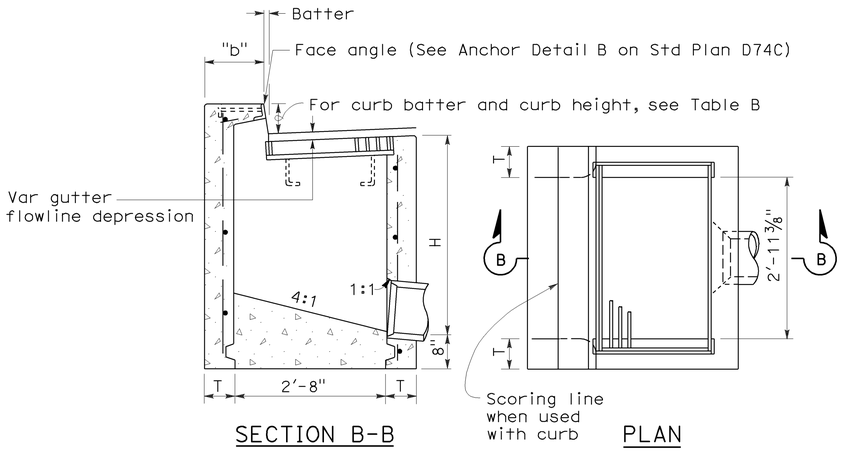

SECTION B-B PLAN

TYPE GO

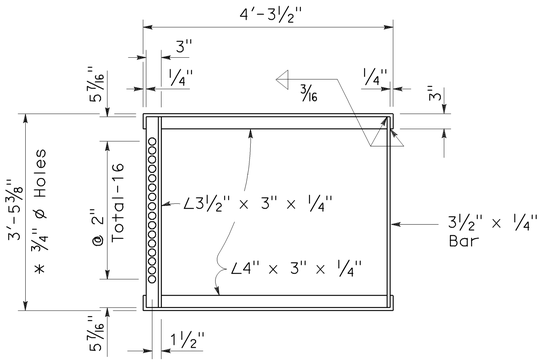

* 3/4" ø Holes required only with trash rack

GRATE FRAME FOR TYPE GDO INLET

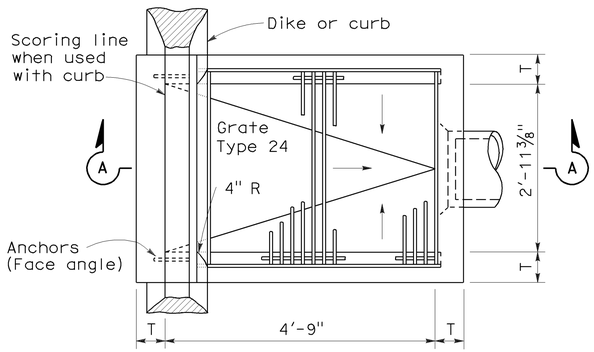

PLAN

TYPE GDO

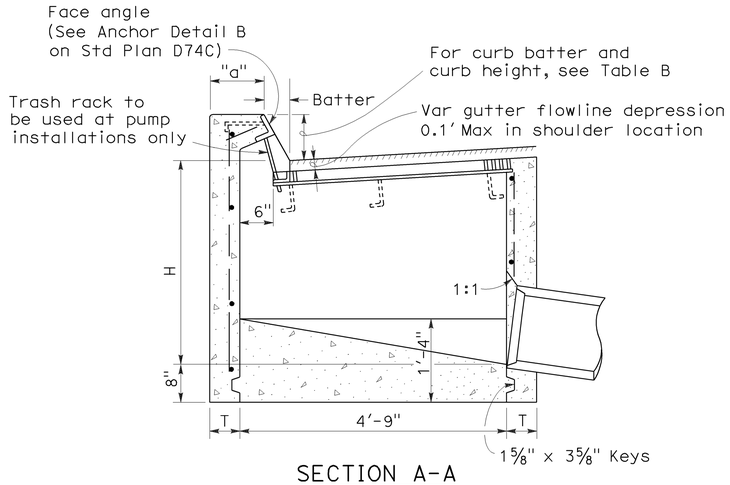

SECTION A-A

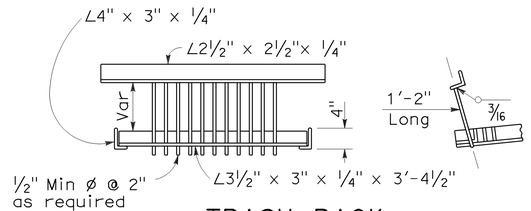

TRASH RACK

(For use with pump installation)

TABLE A

CONCRETE QUANTITIES				
	H=3'-0" TO 8'-0" (T=6")		H=8'-1" TO 20'-0" (T=8")	
TYPE	H=3'-0" (CY)	ADDITIONAL PCC PER FOOT (CY)	H=8'-1" (CY)	ADDITIONAL PCC PER FOOT (CY)
GO	1.24	0.245	3.39	0.346
GDO	1.62	0.322	4.36	0.446

Table based on 8" floor slab, no deduction for pipe openings, and curb type giving highest quantity of concrete. No deductions or adjustments are to be made to these quantities because of pipe openings, different floor alternatives or different curb type.

TABLE B

CURB TYPE	NORMAL CURB HEIGHT	CURB BATTER	"a" DIMENSION	"b" DIMENSION
A1-6	6"	1 1/2"	T+7 1/2"	T+6 1/2"
A1-8	8"	2"	T+7"	T+6"
B1-6	6"	4"	T+5"	T+4"
Type A Dike	6"	3"	T+6"	T+5"

DIST	COUNTY	ROUTE	POST MILES TOTAL PROJECT	SHEET NO.	TOTAL SHEETS
04	Son	116,12	26.7, 9.2	35	58

Glenn DeCou
REGISTERED CIVIL ENGINEER

June 15, 2007
PLANS APPROVAL DATE

REGISTERED PROFESSIONAL ENGINEER
Glenn DeCou
No. C34547
Exp. 9-30-07
CIVIL
STATE OF CALIFORNIA

The State of California or its officers or agents shall not be responsible for the accuracy or completeness of electronic copies of this plan sheet.

To accompany plans dated 2-22-10

NOTES:

1. "H" is the difference in elevation between the outlet pipe flow line and the normal gutter grade line undepressed.
2. For "T" wall thickness, see Table A below.
3. Wall reinforcing not required when "H" is 8'-0" or less and the unsupported width or length is 7'-0" or less. Walls exceeding these limits shall be reinforced with #4 @ 18"± centers placed 1½" clear to inside of box unless otherwise shown.
4. Inlet bottom reinforcing not required. See Standard Plan D74C for alternative reinforced bottom.
5. Steps - None required where "H" is less than 2'-6" Where "H" is 2'-6" or more, install steps with lowest rung 1'-0" above the floor and highest rung not more than 6" below top of inlet. The distance between steps shall not exceed 1'-0" and shall be uniform throughout the length of the wall. Place steps in the wall without an opening. Step inserts may be substituted for the bar steps. Step Inserts shall comply with State Industrial Safety requirements. See Standard Plan D74C for step details.
6. When shown on the project plans, place a ¾" plain round protection bar horizontally across the length of the opening and bend back 4" into the inlet wall on each side.
7. Pipe(s) can be placed in any wall.
8. Curb section shall match adjacent curb.
9. Basin floors shall have wood trowel finish and shall slope toward the outlet pipe as shown.
10. Galvanizing - See Standard Specifications or Special Provisions.
11. See Standard Plan D77A and D77B for grate and frame details and weights of miscellaneous iron and Steel.
12. See Standard Plan D78A for gutter depression details.
13. Full penetration butt welds may be substituted for the fillet welds on all anchors.
14. Standard square, hexagon, round or equivalent headed anchors may be substituted for the right angle hooks on the anchors shown on this plan.
15. Cast-in-place or precast alternative is optional with contractor. See Standard Specifications.
16. Cast-in-place inlets to be formed around all pipes/stubs intersecing the inlet and concrete poured in one continuous operation. Precast inlets shall have mortared pipe connections conforming to details for Type GCP inlets on Standard Plan D75B. See Standard Specifications for mortar composition.

STATE OF CALIFORNIA
DEPARTMENT OF TRANSPORTATION

DRAINAGE INLETS

NO SCALE

RSP D74B DATED JUNE 15, 2007 SUPERSEDES STANDARD PLAN D74B DATED MAY 1, 2006 - PAGE 150 OF THE STANDARD PLANS BOOK DATED MAY 2006.

REVISED STANDARD PLAN RSP D74B

2006 REVISED STANDARD PLAN RSP D74B

4-16-07

DIST	COUNTY	ROUTE	POST MILES TOTAL PROJECT	SHEET NO.	TOTAL SHEETS
04	Son	116,12	26.7, 9.2	36	58

Raymond Don Tsztoo
REGISTERED CIVIL ENGINEER

January 18, 2008
PLANS APPROVAL DATE

REGISTERED PROFESSIONAL ENGINEER — Raymond Don Tsztoo — No. C37332 — Exp. 6-30-08 — CIVIL — STATE OF CALIFORNIA

The State of California or its officers or agents shall not be responsible for the accuracy or completeness of electronic copies of this plan sheet.

To accompany plans dated 2-22-10

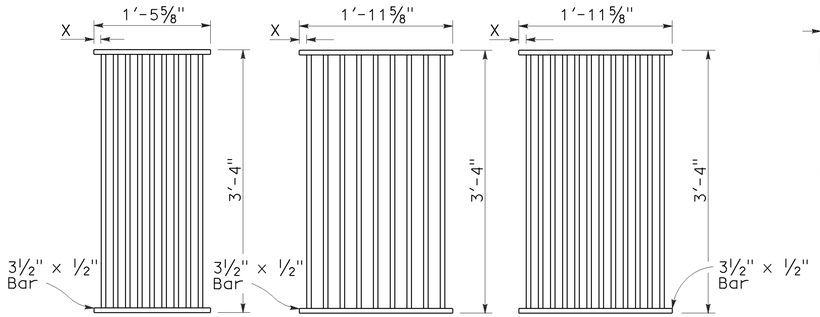

TYPE 18-9

1⅜" Clear spacing. Use within the roadbed on highways where bicycles and pedestrians are excluded.

TYPE 24-9

2" Clear spacing. Use in locations off the roadbed on all types of highways.

TYPE 24-12

1⅜" Clear spacing. Use within the roadbed on highways where bicycles and pedestrians are excluded.

RECTANGULAR GRATE DETAILS

(See table below)

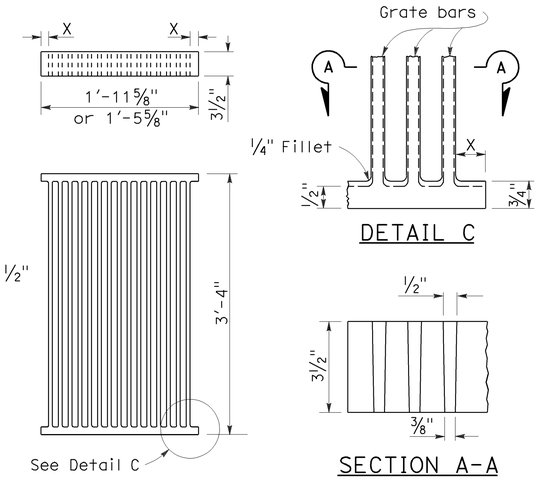

DETAIL C

SECTION A-A

ALTERNATIVE CAST NODULAR IRON GRATE OR CAST STEEL GRATE

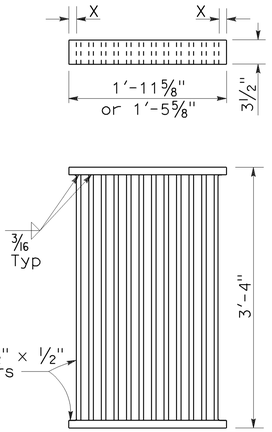

ALTERNATIVE WELDED GRATE

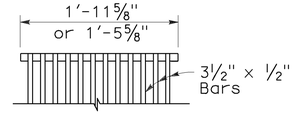

CAST END BLOCK

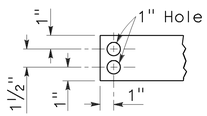

END OF BAR

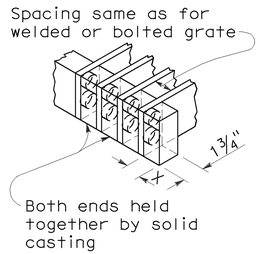

ALTERNATIVE CAST NODULAR IRON OR CAST STEEL END BLOCK GRATE

NOTES:

1. Grate type numbers refer to approximate width of grate in inches and number of bars, respectively.
2. Contractor has the option of using cast nodular iron, cast steel, welded, bolted, or cast end block grate.
3. See Special Provisions for requirements pertaining to galvanizing or asphalt dipping of grates and frames.
4. Rounded top of bars optional on all grates.
5. Pipe inlets with a grate shall be placed so that bars parallel direction of principle surface flow.
6. Full penetration butt welds may be substituted for the fillet welds on all anchors.
7. Standard square, hexagon, round or equivalent headed anchors may be substituted for the right angle hooks on the anchors shown on this plan.
8. Grate and frame weights are based on welded grates (weights of face angles, steps, protection bars, etc. are not included).

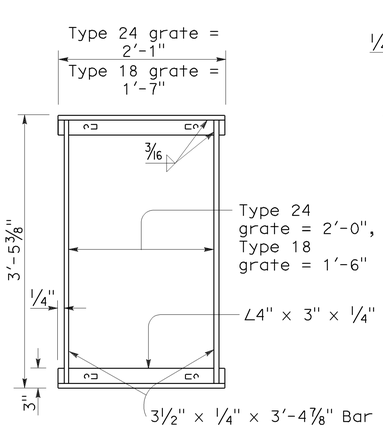

TYPICAL FRAME

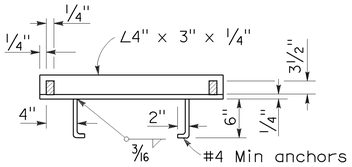

CROSS SECTION
(Thru frame)

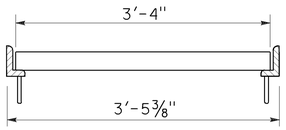

LONGITUDINAL SECTION
(Thru frame and grate)

RECTANGULAR FRAME DETAILS

(For all rectangular grates)

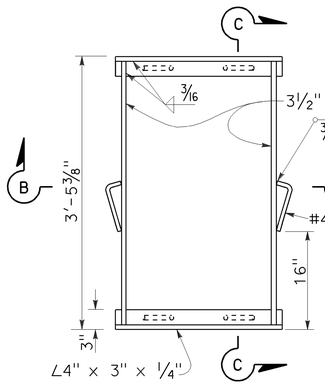

TYPICAL FRAME

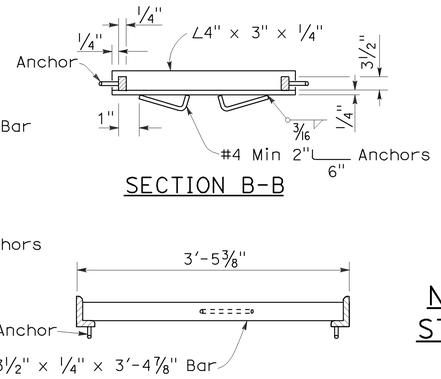

SECTION B-B

SECTION C-C

ALTERNATIVE ANCHOR FOR RECTANGULAR FRAME

(For details not shown, See Rectangular Frame Details)

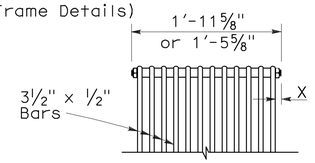

BOLTED END BLOCK

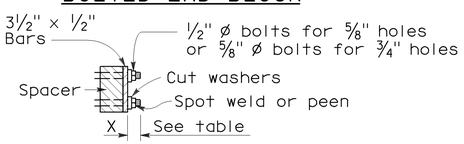

BOLTING DETAIL

ALTERNATIVE BOLTED GRATE

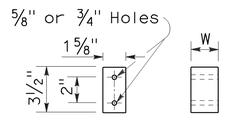

BAR SPACER

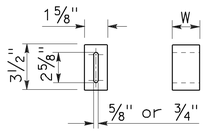

ALTERNATIVE SPACER
W = 1⅜" or 2"

GRATE BAR SPACING TABLE

TYPE	No. OF BARS	CLEAR BAR SPACING	X
18-9	9	1⅜"	1 1⁄16"
24-9	9	2"	1 9⁄16"
24-12	12	1⅜"	1¼"

INLET TYPE	COVER TYPE	WEIGHT LB
OS	PLATE	174
OL-7	PLATE	170
OL-10	PLATE	170
OL-14	PLATE	170
OL-21	PLATE	170
OCP	PLATE	112
OCPI	PLATE	112
OCPI	REDWOOD	42
OMP	PLATE	177
OMPI	PLATE	177

INLET TYPE	GRATE TYPE	No. OF GRATES	WEIGHT LB
GDO	24-12	2	634
GOL-7	24-12	1	326
GOL-10	24-12	1	326
GO,G1,G2,G3,G4 (TYPE 24)	24-9	1	263
	24-12	1	326
G4 (TYPE 18),G5,G6	18-9	1	249
GT1	18-9	2	498
GT2	18-9	2	498
GT3	24-12	2	652
GT4	24-12	2	652
TRASH RACK			22

BASIS FOR MISC IRON & STEEL FINAL PAY WEIGHTS FOR DRAINAGE INLETS

(See General Notes, No 8)

STATE OF CALIFORNIA
DEPARTMENT OF TRANSPORTATION

GRATE DETAILS

NO SCALE

RSP D77A DATED JANUARY 18, 2008 SUPERSEDES STANDARD PLAN D77A DATED MAY 1, 2006 - PAGE 155 OF THE STANDARD PLANS BOOK DATED MAY 2006.

REVISED STANDARD PLAN RSP D77A

12-14-07

DIST	COUNTY	ROUTE	POST MILES TOTAL PROJECT	SHEET NO.	TOTAL SHEETS
04	Son	116,12	26.7, 9.2	37	58

Jeffery G. McRae
REGISTERED ELECTRICAL ENGINEER

October 5, 2007
PLANS APPROVAL DATE

REGISTERED PROFESSIONAL ENGINEER
Jeffery G. McRae
No. E14512
Exp. 6-30-08
ELECTRICAL
STATE OF CALIFORNIA

The State of California or its officers or agents shall not be responsible for the accuracy or completeness of electronic copies of this plan sheet.

To accompany plans dated 2-22-10

ELECTROLIERS

STANDARD TYPES
15, 15D
15 STRUCTURE
21, 21D STRUCTURE
30
31
32
35
36-20A

High mast light pole

Double Arm lighting standard

Existing electrolier

Electrolier foundation (Future installation)

NOTES:

1. Luminaires shall be 310 W HPS when installed on Type 21, 21D, 30, 31, 32, 35 and 36-20A Standards, unless otherwise specified. Luminaires shall be 200 W HPS when installed on other type standards or poles, unless otherwise specified.
2. Luminaires shall be the cutoff type, ANSI Type III medium cutoff lighting distribution, unless otherwise specified.
3. Variations noted adjacent to symbol on project plans.

Electrolier (see project notes or project plans)

Luminaire on wood pole

STANDARD NOTES:

- AB Abandon. If applied to conduit, remove conductors.
- BC Install pull box in existing conduit run.
- BP Pedestrian barricade, type as indicated on plan.
- CB Install conduit into existing pull box.
- CC Connect new and existing conduit. Remove existing conductors and install conductors as indicated.
- CF Conduit to remain for future use. Remove conductors. Install pull wire or rope.
- DH Detector handhole.
- FA Foundation to be abandoned.
- IS Install sign on signal mast arm.
- NS No slip base on standard.
- PEC Photoelectric control.
- PEU Photoelectric unit.
- RC Equipment or material to be removed and become the property of the Contractor.
- RE Remove electrolier, fuses and ballast. Tape ends of conductors.
- RL Relocate equipment.
- RR Remove and reuse equipment.
- RS Remove and salvage equipment.
- SC Splice new to existing conductors.
- SD Service disconnect.
- SF Standard to remain for future use. Remove luminaire, pole conductors, fuses and ballast.
- TSP Telephone service point.

ABBREVIATIONS AND EQUIPMENT DESIGNATIONS

PROPOSED	EXISTING	
BBS	bbs	Battery backup system
BC	bc	Bolt circle
C	C	Conduit
CCTV	cctv	Closed circuit television
CKT	ckt	Circuit
CMS	cms	Changeable message sign
DLC	dlc	Loop detector lead-in cable
EMS	ems	Extinguishable message sign
EVC	evc	Emergency vehicle cable
EVD	evd	Emergency vehicle detector
FB	fb	Flashing beacon
FBCA	fbca	Flashing beacon control assembly
FBS	fbs	Flashing beacon with slip base
FO	fo	Fiber optic
G	G	Ground (Equipment Grounding Conductor)
GFCI	GFCI	Ground fault circuit interrupt
HAR	har	Highway advisory radio
HEX	hex	Hexagonal
HPS	hps	High pressure sodium
IISNS	iisns	Internally illuminated street name sign
ISL	isl	Induction sign lighting
LED	led	Light emitting diode
LMA	lma	Luminaire mast arm
LPS	lps	Low pressure sodium
LTG	ltg	Lighting
LUM	lum	Luminaire
MAT	mat	Mast arm mounting vehicle signal faces, top attachment
MAS	mas	Mast arm mounting vehicle signal faces, side attachment
MAS-4A	mas-4A	Mast arm mounting vehicle signal faces,
MAS-4B	mas-4B	side attachment - 4 signal section
MAS-4C	mas-4C	
MAS-5A	mas-5A	Mast arm mounting vehicle signal faces,
MAS-5B	mas-5B	side attachment - 5 signal section
MC	mc	Mercury contactor
M/M	m/m	Multiple to multiple transformer
MT	mt	Conduit with pull wire or rope only
MTG	mtg	Mounting
	mv	Mercury vapor lighting fixture
N	N	Neutral (Grounded Conductor)
NC	NC	Normally closed
NO	NO	Normally open
PB	pb	Pull box
PEC	pec	Photoelectric control (Type I, II, III, IV or V as shown)
PED	ped	Pedestrian
PEU	peu	Photoelectric unit
PPB	ppb	Pedestrian push button
RL		Relocated equipment
RM	rm	Ramp metering
SB	sb	Slip base
SIC	sic	Signal interconnect cable
SIG	sig	Signal
SMA	sma	Signal mast arm
SNS	sns	Street name sign
SP	sp	Service point
TDC	tdc	Telephone demarcation cabinet
TMS	tms	Traffic monitoring station
TOS	tos	Traffic Operations System
VEH	veh	Vehicle
XFMR	xfmr	Transformer
COMM	comm	Communication
RWIS	rwis	Roadway weather information system

SOFFIT AND WALL MOUNTED LUMINAIRES

Pendant, 70 W HPS unless otherwise specified.

Flush, 70 W HPS unless otherwise specified.

Wall surface, 70 W HPS unless otherwise specified.

Existing soffit or wall luminaire to remain unmodified.

Existing soffit or wall luminaire to be modified as specified.

NOTE:

Arrow indicates "street side" of luminaire.

STATE OF CALIFORNIA
DEPARTMENT OF TRANSPORTATION

ELECTRICAL SYSTEMS (SYMBOLS AND ABBREVIATIONS)

NO SCALE

RSP ES-1A DATED OCTOBER 5, 2007 SUPERSEDES STANDARD PLAN ES-1A
DATED MAY 1, 2006 - PAGE 400 OF THE STANDARD PLANS BOOK DATED MAY 2006.

REVISED STANDARD PLAN RSP ES-1A

2006 REVISED STANDARD PLAN RSP ES-1A

7-10-07

DIST	COUNTY	ROUTE	POST MILES TOTAL PROJECT	SHEET NO.	TOTAL SHEETS
04	Son	116,12	26.7, 9.2	38	58

REGISTERED ELECTRICAL ENGINEER

Jeffery G. McRae
No. E14512
Exp. 6-30-08
ELECTRICAL
REGISTERED PROFESSIONAL ENGINEER
STATE OF CALIFORNIA

October 5, 2007
PLANS APPROVAL DATE

The State of California or its officers or agents shall not be responsible for the accuracy or completeness of electronic copies of this plan sheet.

To accompany plans dated 2-22-10

CONDUIT

PROPOSED	EXISTING	
— — —	— — —	Lighting Conduit, unless otherwise indicated or noted
— - — - —	— - — - —	Traffic signal conduit
—C— —	—c— —	Communication conduit
—T— —	—t— —	Telephone conduit
—F— —	—f— —	Fire alarm conduit
—FO— —	—fo— —	Fiber optic conduit
— — —]	— — —]	Conduit termination (RSP ES-9A C)
R	r	Conduit riser in/on structure or service pole

SERVICE EQUIPMENT

PROPOSED	EXISTING	
—OH—	—oh—	Overhead lines
U	U	Wood pole "U" indicates utility owned
		Pole guy with anchor
		Utility transformer - ground mounted
III		Service equipment enclosure type
		Service equipment enclosure door indicates front of enclosure
T	t	Telephone demarcation cabinet

POLE-MOUNTED SERVICE DESIGNATION

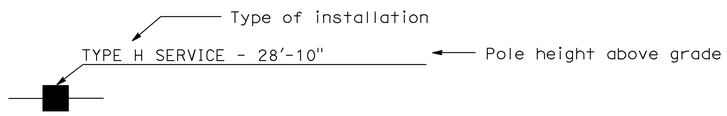

ILLUMINATED OVERHEAD SIGN

PROPOSED	EXISTING	
		Overhead sign - Single post
		Overhead sign - Two post
		Overhead sign - Mounted on structure
		Overhead sign with electrolier

SIGNAL EQUIPMENT

PROPOSED	EXISTING	
		Pedestrian signal face
		Pedestrian push button post
		Pedestrian barricade
		Vehicle signal face (with backplate, 3-Section: red, yellow and green)
		Vehicle signal face with angle visors
PV	PV	Modifications of basic symbols: "L" Indicates all non-arrow sections louvered "LG" Indicates louvered green section only "PV" Indicates 12" programmed visibility sections "8" indicates all 8" sections (only when specified)
		Type 15TS and Vehicle signal face
		Vehicle signal face with red, yellow and green left arrow sections
		Vehicle signal face with red and yellow sections and up green arrow
		Vehicle signal face (5 Section) with red, yellow and green sections and yellow and green right arrows
		Type 1 Standard and attached vehicle signal faces
		Standard with signal mast arm only and attached vehicle signal faces and internally illuminated street name sign
		Type 33 Standard, Left-turn vehicle signal face and sign
		Standard with luminaire and signal mast arms and attached vehicle signal faces
		Cantilever flashing beacon Type 9 Frame, with a sign unless otherwise specified or indicated
		Type 15-FBS Standard with two vehicle signal face sections with lens, backplate and visor with a sign
R	Y	Flashing beacon. One vehicle signal face section with lens, backplate and visor. "R" indicates red indication, "Y" indicates yellow indication
		Controller assembly. Door indicates front of cabinet

SIGNAL EQUIPMENT Cont

PROPOSED	EXISTING	
		Guard post
		Type 1 Standard with "Meter On" sign
		Emergency Vehicle detector

NOTES:

1. All signal sections shall be 12" unless shown otherwise.
2. Signal heads shall be provided with backplates unless shown otherwise.
3. Signal indication shall be LED.

STATE OF CALIFORNIA
DEPARTMENT OF TRANSPORTATION

ELECTRICAL SYSTEMS (SYMBOLS AND ABBREVIATIONS)

NO SCALE

RSP ES-1B DATED OCTOBER 5, 2007 SUPERCEDES STANDARD PLAN ES-1B
DATED MAY 1, 2006 - PAGE 401 OF THE STANDARD PLANS BOOK DATED MAY 2006.

REVISED STANDARD PLAN RSP ES-1B

2006 REVISED STANDARD PLAN RSP ES-1B

7-10-07

DIST	COUNTY	ROUTE	POST MILES TOTAL PROJECT	SHEET NO.	TOTAL SHEETS
04	Son	116,12	26.7, 9.2	39	58

Jeffrey G. McRae
REGISTERED ELECTRICAL ENGINEER

October 5, 2007
PLANS APPROVAL DATE

REGISTERED PROFESSIONAL ENGINEER — Jeffery G. McRae — No. E14512 — Exp. 6-30-08 — ELECTRICAL — STATE OF CALIFORNIA

The State of California or its officers or agents shall not be responsible for the accuracy or completeness of electronic copies of this plan sheet.

To accompany plans dated 2-22-10

EQUIPMENT IDENTIFICATION

ILLUMINATED SIGN IDENTIFICATION NUMBER:

Sign No. 12345 — Sign number - Place on post or structure

10 ISL SCI 1.0
- 1.0 — Transformer rating (kVA)
- SCI — Lighting control type
- ISL — Number and type of fixtures

Do NOT place on standard or structure

ELECTROLIER OR EQUIPMENT IDENTIFICATION NUMBER:

12345 - 15'-0"
- 15'-0" — Mast arm length, if shown. Do not place on standard or structure.
- 12345 — Equipment number - Place on standard or structure. Existing equipment numbers are shown in parenthesis

CONDUIT AND CONDUCTOR IDENTIFICATION:

1½"C, 2#10, 15#14, 2 DLC
- 2#10, 15#14, 2 DLC — Number and size of conductors and cables
- 1½"C, — Size of conduit in inches

ø1, ø2, ø2P, etc. — Traffic phase identification for signal faces, detectors and phase diagrams

[1] [2] [3] — Project note numbers

(A) (B) (C) — Equipment description, installation or item numbers

△1 △2 △3 — Conduit run numbers

SIGNAL AND LIGHTING STANDARD (TYPICAL DESIGNATION):

19A - 3 - 100
- 100 — Wind velocity = 100 mph
- 3 — Case 3 arm loading
- 19A — Standard type
- Standard Plan sheet number
- Detail number or letter

MISCELLANEOUS EQUIPMENT

PROPOSED	EXISTING	
CMS	cms	Changeable message sign
		Closed circuit television camera
		Highway advisory radio pole and antenna
EMS	ems	Extinguishable message sign
M V	m v	Detection device M = Microwave sensor V = Video image sensor

WIRING DIAGRAM LEGEND

P	Pole
CB	Circuit breaker
A	Ampere
V	Volt
M	Metered
UM	Unmetered
NB	Neutral bus
GB	Ground bus
G	Equipment grounding conductor
N	Grounded conductor (Neutral)

- External conductor
- Conductor or bus
- Tie point
- Contactor coil
- Contactor, Contact NO
- Terminal blocks
- Contactor, Contact NC
- Enclosure bond
- Grounding electrode
- Circuit breaker
- Receptacle

PULL BOXES

PROPOSED	EXISTING
3	9A(21)

Pull box-No. 5 unless otherwise indicated or noted.

Pull box-Additional designations or descriptions

- (C) = Communications pull box
- (E) = Pull box with extension
- (S) = Sprinkler control pull box
- (21) = Anchor bolts and conduit for future installation of Type 21 Standard
- (T) = Traffic pull box

- 3 = No. 3½ pull box
- 5 = No. 5 pull box
- 6 = No. 6 pull box
- 7 = No. 7 (Ceiling pull box)
- 8 = No. 8 (Pendant soffit pull box)
- 9 = No. 9 pull box
- 9A = No. 9A pull box

VEHICLE DETECTORS

5 J 9 U
- 9 — Slot number in input file
- J — Input file (I or J)
- U — Phase
- U = Upper, L = Lower

PROPOSED	EXISTING	
		Type A detector loop. Outline of sawcut shown.
		Type B detector loop. Outline of sawcut shown.
		Type C detector loop. Outline of sawcut shown.
		Type D detector loop. Outline of sawcut shown.
		Type E detector loop. Outline of sawcut shown.
		Type Q detector loop. Outline of sawcut shown.
		Magnetic detector
DH	dh	Detector handhole
		Microwave or video detection zone

STATE OF CALIFORNIA
DEPARTMENT OF TRANSPORTATION

ELECTRICAL SYSTEMS (SYMBOLS AND ABBREVIATIONS)

NO SCALE

RSP ES-1C DATED OCTOBER 5, 2007 SUPERCEDES STANDARD PLAN ES-1C
DATED MAY 1, 2006 - PAGE 402 OF THE STANDARD PLANS BOOK DATED MAY 2006.

REVISED STANDARD PLAN RSP ES-1C

2006 REVISED STANDARD PLAN RSP ES-1C

7-10-07

DIST	COUNTY	ROUTE	POST MILES TOTAL PROJECT	SHEET NO.	TOTAL SHEETS
04	Son	116,12	26.7, 9.2	40	58

Jeffery G. McRae
REGISTERED ELECTRICAL ENGINEER

Jeffery G. McRae
No. E14512
Exp. 6-30-08
ELECTRICAL
REGISTERED PROFESSIONAL ENGINEER
STATE OF CALIFORNIA

October 5, 2007
PLANS APPROVAL DATE

The State of California or its officers or agents shall not be responsible for the accuracy or completeness of electronic copies of this plan sheet.

To accompany plans dated 2-22-10

NOTES-TYPE III SERVICE EQUIPMENT ENCLOSURES:

1. Service equipment enclosure and metering equipment shall meet the requirements of the service utility. The meter area shall have a sealable, lockable, weathertight cover that can be removed without the use of tools.

2. Service equipment enclosures shall be factory wired and conform to NEMA standards.

3. Dimensions of service equipment enclosures shall meet the requirements of the service utility.

4. The dead front panels on Type III service equipment enclosures shall have a continuous stainless steel or aluminum piano hinge. The panel in front of the breakers shall be secured with a latch or captive screws. No live parts shall be mounted on the dead front panel.

5. The exterior door shall have provisions for padlocking. The padlock hole shall be a minimum diameter of 7/16".

6. Enclosures housing transformers of more than one kVA shall have effective screened ventilation louver of not less than 50 square inches. Screen shall be stainless steel No. 304, with a No. 10 size mesh. Framed screen shall be secured with at least four bolts.

7. Fasteners on the exterior of the enclosure shall be vandal-resistant and shall not be removable from the exterior. Exterior screws, nuts, bolts and washers shall be stainless steel.

8. Landing lugs for incoming service conductors shall be compatible with either copper or aluminum conductors sized to suit the conductors shown on the plan. Landing lugs shall be copper or tin-plated aluminum. Neutral bus shall be rated for 125 A and be suitable for copper or aluminum conductors unless otherwise specified. The terminal shall include but not be limited to:

   a) Incoming terminals (landing lugs)
   b) Neutral lugs
   c) Solid neutral terminal strip

9. At least 6 standard single pole circuit breaker spaces, 3/4" nominal, shall be provided for branch circuits. Circuit breaker interiors shall be copper. Interiors of enclosure shall accept plug-in or cable-in/cable-out circuit breakers.

10. Control wiring shall be 600 V, 14 stranded machine tool wire. Where subject to flexing, 19 strand wire shall be used.

11. Main bus shall be rated for 125 A and shall be tin-plated copper.

12. A plastic laminated wiring diagram shall be provided with brass mounting eyelets and attached to the inside of the enclosure and the wiring diagram shall be affixed to the interior with a UL or ETL approved method.

13. An engraved phenolic nameplate on the dead front panel indicating the function of each circuit or device shall be installed with stainless steel rivets or stainless steel screws:

    a) Adjacent to the breaker or device with character size a minimum of 1/8".

    b) At the top of the exterior door panel indicating State system number, voltage level and number of phases with character size a minimum of 3/16".

14. The plan shows the approximate location of devices within the enclosure. Components may be rearranged, however, the "working" clearances within the service equipment enclosure shall be maintained.

15. In unpaved areas a raised portland cement concrete pad 2'-0" x 4" x width of foundation shall be constructed in front of new service equipment enclosure installation. Pad shall be set to elevation of foundation.

16. Foundation shall extend 2" minimum beyond edge of service equipment enclosure.

17. Internal bus, where shown, is typical only. Alternative design of proposed service equipment enclosure shall be submitted to the Engineer for approval.

18. Plug-in circuit breakers may be mounted in the vertical or horizontal position. Cable-in/cable-out circuit breakers shall be mounted in the vertical position.

19. Type III-AF and Type III-BF service equipment enclosures shall have the meter viewing windows located on the front side of the service equipment enclosures.

20. Type III-AR and Type III-BR service equipment enclosures shall be similarly constructed as Type III-AF and Type III-BF respectively, except the meter viewing windows shall be located on the back side of the service equipment enclosures.

21. Minimum clearance shall be required for front and back of service equipment enclosure per National Electrical Code, Article 110.26, "Spaces About Electric Equipment (600 Volts, Nominal, or Less)."

STATE OF CALIFORNIA
DEPARTMENT OF TRANSPORTATION

ELECTRICAL SYSTEMS (SERVICE EQUIPMENT NOTES TYPE III SERIES)

NO SCALE

RSP ES-2C DATED OCTOBER 5, 2007 SUPERCEDES STANDARD PLAN ES-2C
DATED MAY 1, 2006 - PAGE 405 OF THE STANDARD PLANS BOOK DATED MAY 2006.

REVISED STANDARD PLAN RSP ES-2C

2006 REVISED STANDARD PLAN RSP ES-2C

7-10-07

DIST	COUNTY	ROUTE	POST MILES TOTAL PROJECT	SHEET NO.	TOTAL SHEETS
04	Son	116,12	26.7, 9.2	41	58

Jeffery G. McRae
REGISTERED ELECTRICAL ENGINEER

Jeffery G. McRae
No. E14512
Exp. 6-30-08
ELECTRICAL
REGISTERED PROFESSIONAL ENGINEER
STATE OF CALIFORNIA

October 5, 2007
PLANS APPROVAL DATE

The State of California or its officers or agents shall not be responsible for the accuracy or completeness of electronic copies of this plan sheet.

To accompany plans dated 2-22-10

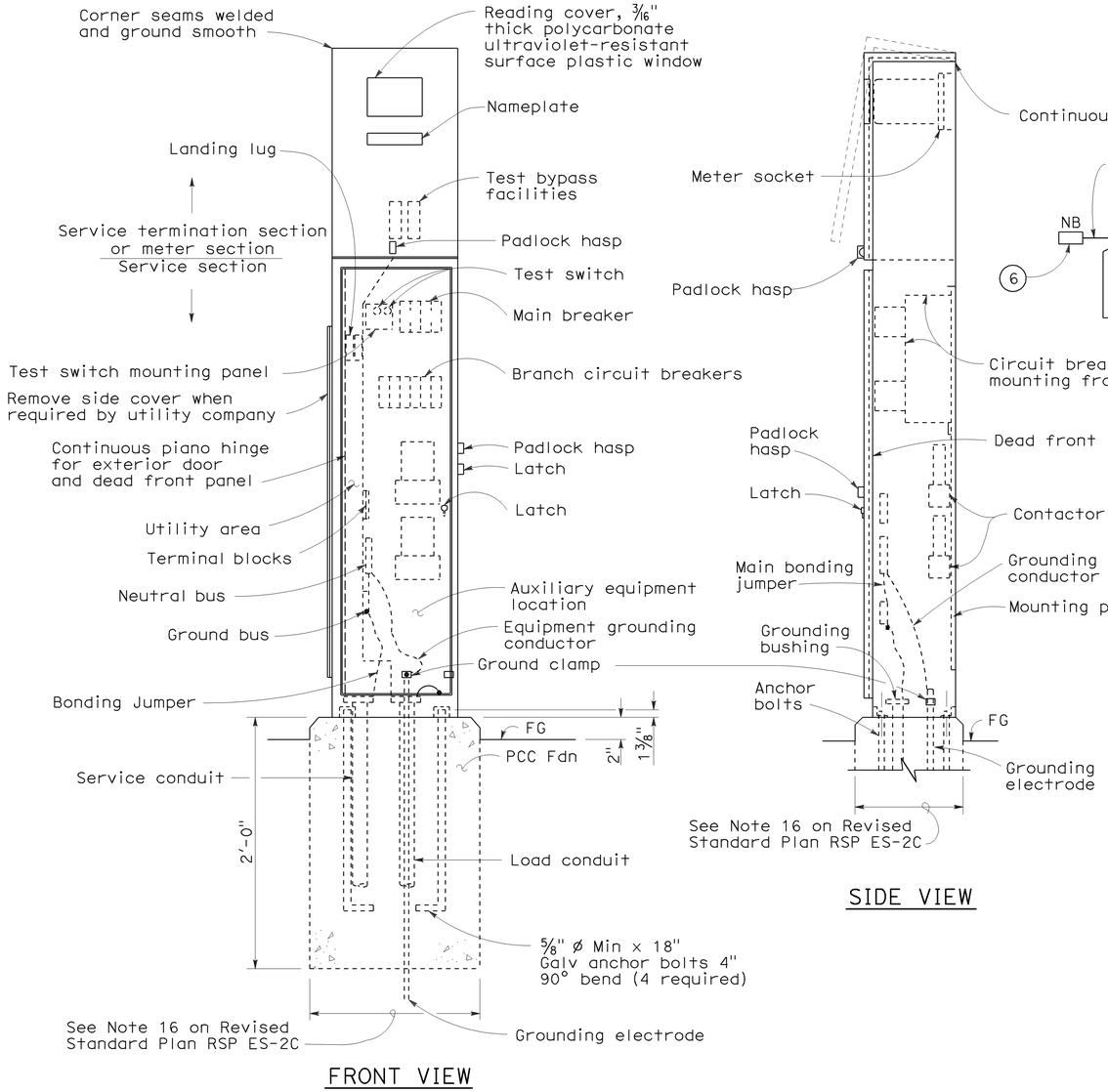

TYPE III-AF SERVICE EQUIPMENT ENCLOSURE (TYPICAL)

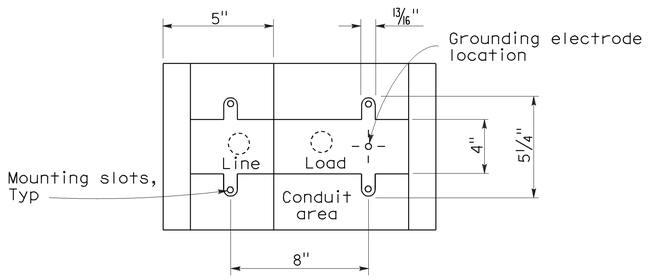

BASE FOR TYPE III-A SERVICE EQUIPMENT ENCLOSURE

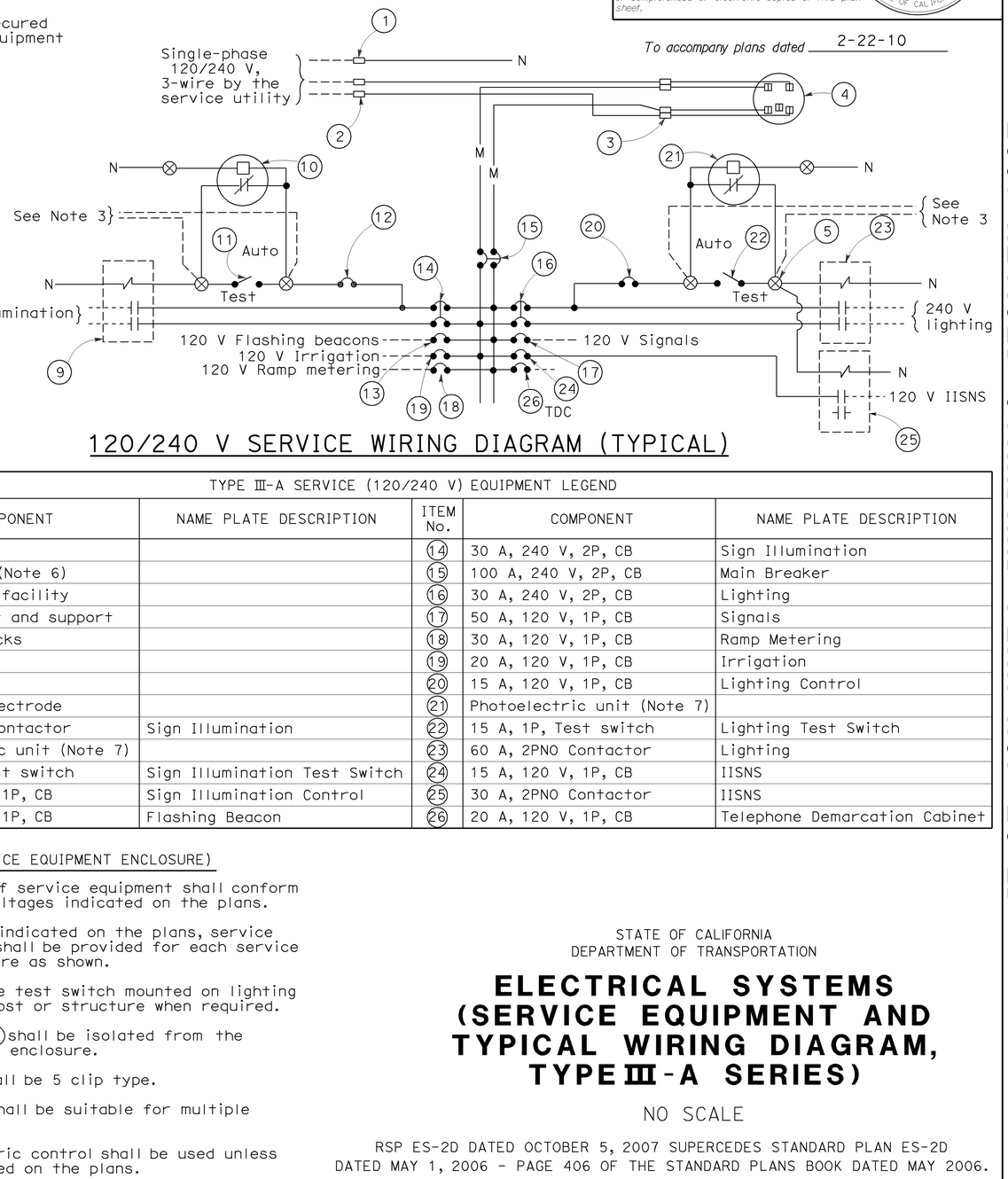

120/240 V SERVICE WIRING DIAGRAM (TYPICAL)

TYPE III-A SERVICE (120/240 V) EQUIPMENT LEGEND

ITEM No.	COMPONENT	NAME PLATE DESCRIPTION	ITEM No.	COMPONENT	NAME PLATE DESCRIPTION
(1)	Neutral lug		(14)	30 A, 240 V, 2P, CB	Sign Illumination
(2)	Landing lug (Note 6)		(15)	100 A, 240 V, 2P, CB	Main Breaker
(3)	Test bypass facility		(16)	30 A, 240 V, 2P, CB	Lighting
(4)	Meter socket and support		(17)	50 A, 120 V, 1P, CB	Signals
(5)	Terminal blocks		(18)	30 A, 120 V, 1P, CB	Ramp Metering
(6)	Neutral bus		(19)	20 A, 120 V, 1P, CB	Irrigation
(7)	Ground bus		(20)	15 A, 120 V, 1P, CB	Lighting Control
(8)	Grounding electrode		(21)	Photoelectric unit (Note 7)	
(9)	30 A, 2PNO Contactor	Sign Illumination	(22)	15 A, 1P, Test switch	Lighting Test Switch
(10)	Photoelectric unit (Note 7)		(23)	60 A, 2PNO Contactor	Lighting
(11)	15 A, 1P, Test switch	Sign Illumination Test Switch	(24)	15 A, 120 V, 1P, CB	IISNS
(12)	15 A, 120 V, 1P, CB	Sign Illumination Control	(25)	30 A, 2PNO Contactor	IISNS
(13)	15 A, 120 V, 1P, CB	Flashing Beacon	(26)	20 A, 120 V, 1P, CB	Telephone Demarcation Cabinet

NOTES: (FOR SERVICE EQUIPMENT ENCLOSURE)

1. Voltage ratings of service equipment shall conform to the service voltages indicated on the plans.
2. Unless otherwise indicated on the plans, service equipment items shall be provided for each service equipment enclosure as shown.
3. Connect to remote test switch mounted on lighting standards, sign post or structure when required.
4. Items No. (1) and (6) shall be isolated from the service equipment enclosure.
5. Meter sockets shall be 5 clip type.
6. The landing lug shall be suitable for multiple conductors.
7. Type V photoelectric control shall be used unless otherwise indicated on the plans.

STATE OF CALIFORNIA
DEPARTMENT OF TRANSPORTATION

ELECTRICAL SYSTEMS (SERVICE EQUIPMENT AND TYPICAL WIRING DIAGRAM, TYPE III-A SERIES)

NO SCALE

RSP ES-2D DATED OCTOBER 5, 2007 SUPERCEDES STANDARD PLAN ES-2D DATED MAY 1, 2006 - PAGE 406 OF THE STANDARD PLANS BOOK DATED MAY 2006.

REVISED STANDARD PLAN RSP ES-2D

2006 REVISED STANDARD PLAN RSP ES-2D

7-10-07

DIST	COUNTY	ROUTE	POST MILES TOTAL PROJECT	SHEET NO.	TOTAL SHEETS
04	Son	116,12	26.7, 9.2	42	58

Jeffery G. McRae
REGISTERED ELECTRICAL ENGINEER

Jeffery G. McRae
No. E14512
Exp. 6-30-10
ELECTRICAL
REGISTERED PROFESSIONAL ENGINEER
STATE OF CALIFORNIA

June 6, 2008
PLANS APPROVAL DATE

The State of California or its officers or agents shall not be responsible for the accuracy or completeness of electronic copies of this plan sheet.

To accompany plans dated 2-22-10

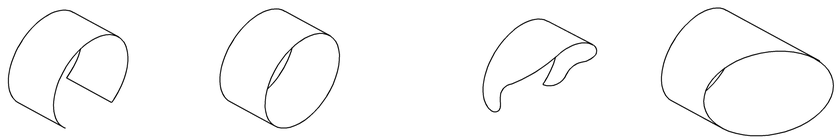

VISORS

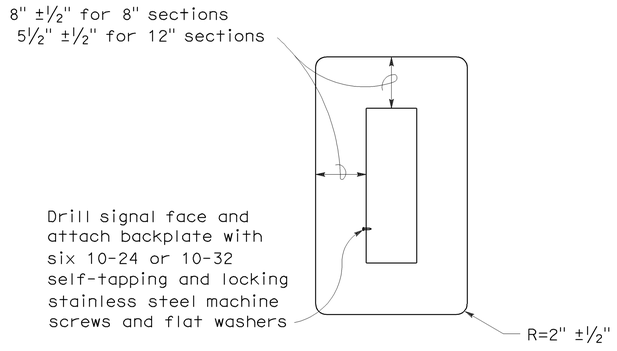

8" AND 12" SECTIONS

BACKPLATE

1/16" minimum thickness
3001-14 aluminum, or plastic when specified

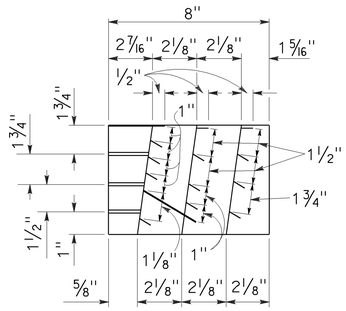

SECTION A-A

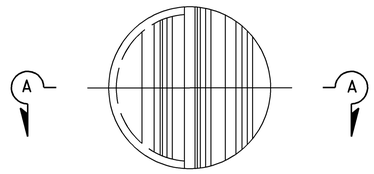

FRONT VIEW

DIRECTIONAL LOUVER

Directional louvers shall be oriented as directed by the Engineer and secured in place with one plated brass machine screw and nut.

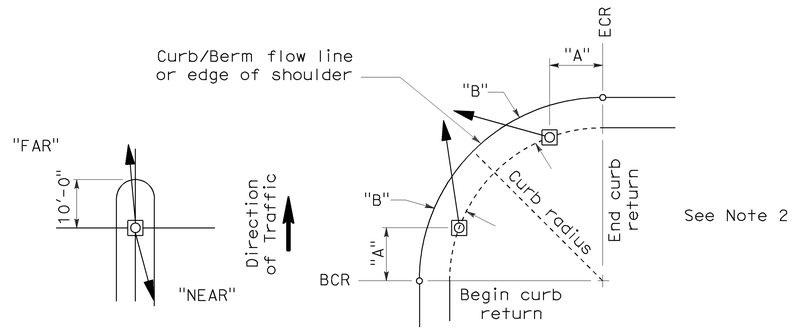

NOTES:

1. Typical signal pole placement unless dimensioned on plans.
2. For "A" and "B" dimensions, see Pole Schedule, or as directed by the Engineer.

SIGNAL STANDARD PLACEMENT DIMENSIONS AND EQUIPMENT LOCATIONS

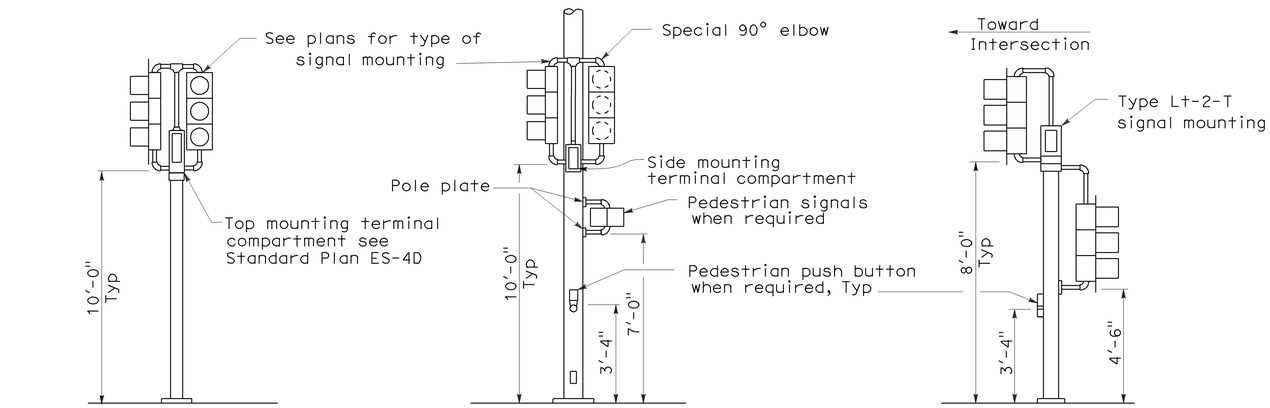

TOP MOUNTED SIGNALS (TV)

Type 1-A, 1-B, 1-C and 1-D standard as indicated on the plans

SIDE MOUNTED SIGNALS (SV AND SP)

Normally used on standards with luminaire or signal mast arm

LEFT TURN LANE SIGNAL

Type 1-A, 1-B, 1-C and 1-D standard as indicated on plans

TYPICAL SIGNAL INSTALLATIONS

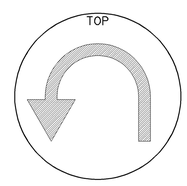

U-TURN SIGNAL FACE

BICYCLE SIGNAL FACE

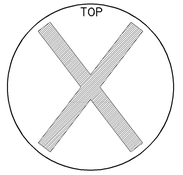

LANE CONTROL SIGNAL FACE

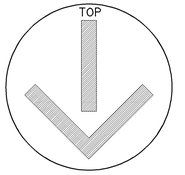

LANE CONTROL SIGNAL FACE

STATE OF CALIFORNIA
DEPARTMENT OF TRANSPORTATION

ELECTRICAL SYSTEMS (SIGNAL HEADS AND MOUNTINGS)

NO SCALE

RSP ES-4C DATED JUNE 6, 2008 SUPERSEDES STANDARD PLAN ES-4C
DATED MAY 1, 2006 - PAGE 420 OF THE STANDARD PLANS BOOK DATED MAY 2006.

REVISED STANDARD PLAN RSP ES-4C

2006 REVISED STANDARD PLAN RSP ES-4C

5-19-08

DIST	COUNTY	ROUTE	POST MILES TOTAL PROJECT	SHEET NO.	TOTAL SHEETS
04	Son	116,12	26.7, 9.2	43	58

Jeffery G. McRae
REGISTERED ELECTRICAL ENGINEER

REGISTERED PROFESSIONAL ENGINEER
Jeffery G. McRae
No. E14512
Exp. 6-30-10
ELECTRICAL
STATE OF CALIFORNIA

June 6, 2008
PLANS APPROVAL DATE

The State of California or its officers or agents shall not be responsible for the accuracy or completeness of electronic copies of this plan sheet.

To accompany plans dated 2-22-10

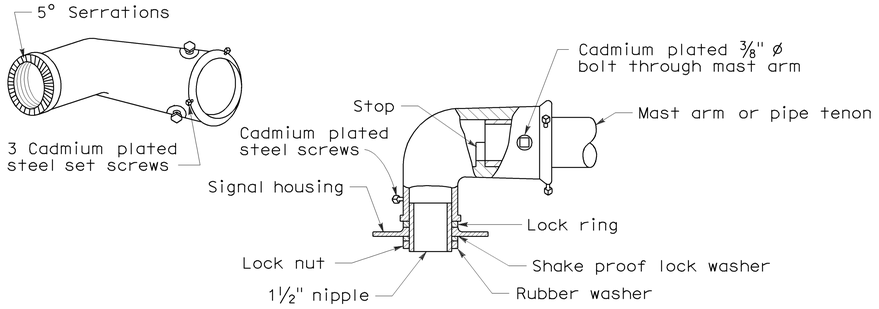

MAST ARM MOUNTING - TYPE "MAT"

For 2 NPS pipe, see Note 1.

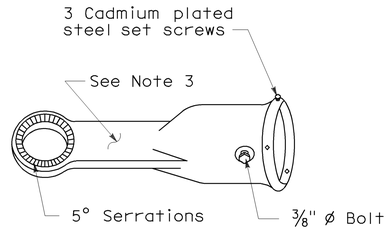

MAST ARM MOUNTING - TYPE "MAS"

For 2 NPS pipe. See Note 1.

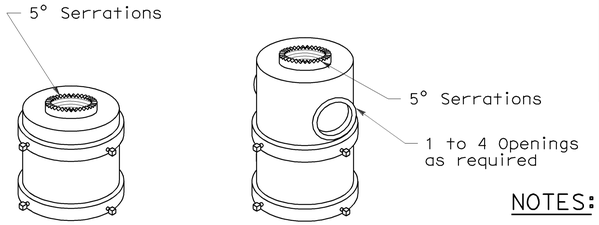

For one mounting For mulitiple mountings

TOP MOUNTINGS

For 4 NPS pipe, see Note 2.

NOTES:

1. After mast arm signal has been plumbed and secured, drill 7/16" hole through mast arm tenon in line with slip fitter hole. Place a cadmium plated ⅜" ø galvanized bolt with washer under bolt head through hole and secure with washer, nut, and locknut. Seal openings between mast arm mountings and mast arm with mastic.
2. (a) Threaded top mounted slip fitter openings shall be 1½ NPS.
   (b) Serrations in fittings shall match those on bottom of signal heads or in lock ring.
   (c) Top opening shall be offset when backplate is used.
3. Wireway shall have a cross section area of 0.95 square inch minimum. Minimum width of ½".

SIGNAL SLIP FITTERS

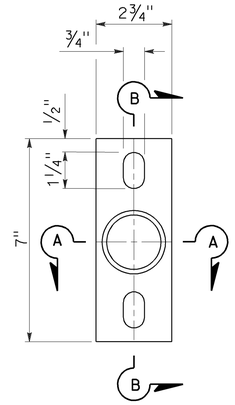

POLE PLATE

For side mountings

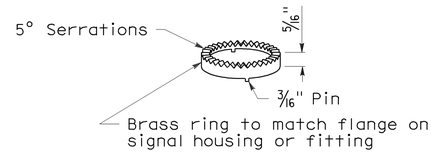

LOCK RING

Use where locking ring is not integral with signal housing or fitting.

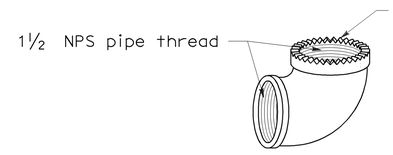

SPECIAL 90° ELBOW

One for each signal head, except those with special slip fitter mounting

MISCELLANEOUS MOUNTING HARDWARE

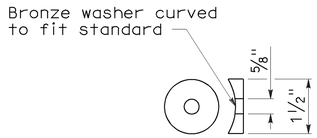

DETAIL "C"

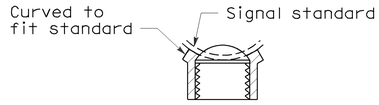

SECTION A-A

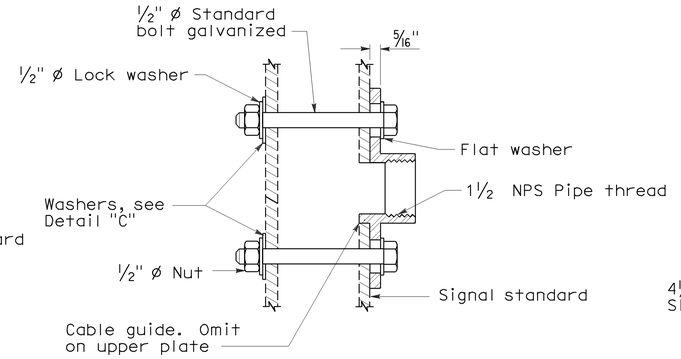

SECTION B-B

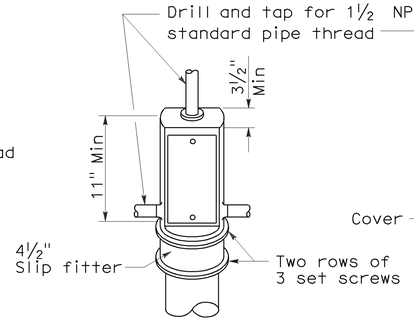

TOP MOUNTING

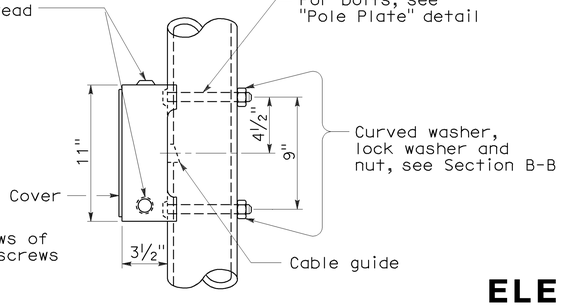

SIDE MOUNTING

TERMINAL COMPARTMENTS

STATE OF CALIFORNIA
DEPARTMENT OF TRANSPORTATION

ELECTRICAL SYSTEMS (SIGNAL HEADS AND MOUNTINGS)

NO SCALE

RSP ES-4D DATED June 6, 2008 SUPERSEDES STANDARD PLAN ES-4D
DATED MAY 1, 2006 - PAGE 421 OF THE STANDARD PLANS BOOK DATED MAY 2006.

REVISED STANDARD PLAN RSP ES-4D

2006 REVISED STANDARD PLAN RSP ES-4D

5-19-08

LOOP INSTALLATION PROCEDURE

1. Loops shall be centered in lanes.
2. Saw slots in pavement for loop conductors as shown in details.
3. Distance between side of loop and a lead-in saw cut from adjacent detectors shall be 2'-0" minimum. Distance between lead-in saw cuts shall be 6" minimum.
4. Bottom of saw slot shall be smooth with no sharp edges.
5. Slots shall be washed until clean, blown out and thoroughly dried before installing loop conductors.
6. Adjacent loops on the same sensor unit channel shall be wound in opposite directions.
7. Identify and tag loop circuit pairs in the pull box with loop number, start (S) and finish (F) of conductor. Identify and tag lead-in-cable with sensor number and phase.
8. Install loop conductor in slot using a 3/16" to 1/4" thick wood paddle. Hold loop conductors with wood paddles (at the bottom of the sawed slot) during sealant placement.
9. No more than 2 twisted pairs shall be installed in one sawed slot.
10. Allow additional 5'-0" of slack length of conductor for the lead-in run to pull box.
11. The additional length of each conductor for each loop shall be twisted together into a pair (6 turns per 3'-4" minimum) before being placed in the slot and conduit leading to pull box.
12. Test each loop circuit for continuity, circuit resistance and insulation resistance at the pull box before filling slots.
13. Fill slots as shown in details.
14. Splice loop conductors to lead-in-cable. Splices shall be soldered.
15. End of lead-in-cable and Type 2 loop conductor shall be waterproofed prior to installing in conduit to prevent moisture from entering the cable.
16. Lead-in-cable shall not be spliced between the pull box and the controller cabinet terminals.
17. Test each loop circuit for continuity, circuit resistance and insulation resistance at the controller cabinet location.
18. Where loop conductors are not to be spliced to a lead-in-cable, the ends of the conductors shall be taped and waterproofed with electrical insulating coating.

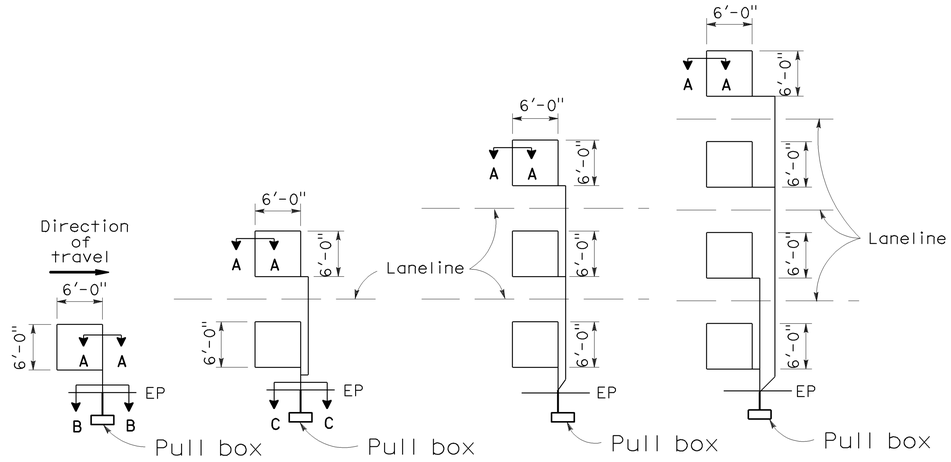

TYPE 1A INSTALLATION | TYPE 2A INSTALLATION | TYPE 3A INSTALLATION | TYPE 4A INSTALLATION

SAWCUT DETAILS

(Type A loop detector configurations illustrated)

1. 1A thru 4A = 1 Type A loop configuration in each lane.
2. 1B thru 4B = 1 Type B loop configuration in each lane.
3. 1C = 1 Type C loop configuration entering lanes as required.
4. 1D thru 4D = 1 Type D loop configuration in each lane.
5. 1E thru 4E = 1 Type E loop configuration in each lane.
6. 1Q thru 4Q = 1 Type Q loop configuration in each lane. (Use Type A, B, C, D, E or Q loop detector configurations only when specified or shown on plans)

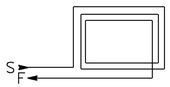

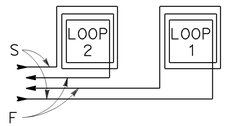

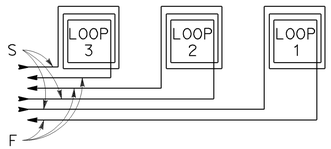

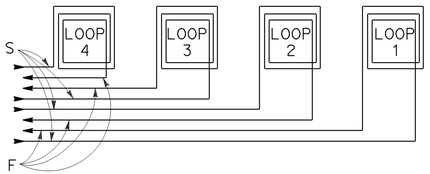

WINDING DETAILS

See Notes 6 and 7

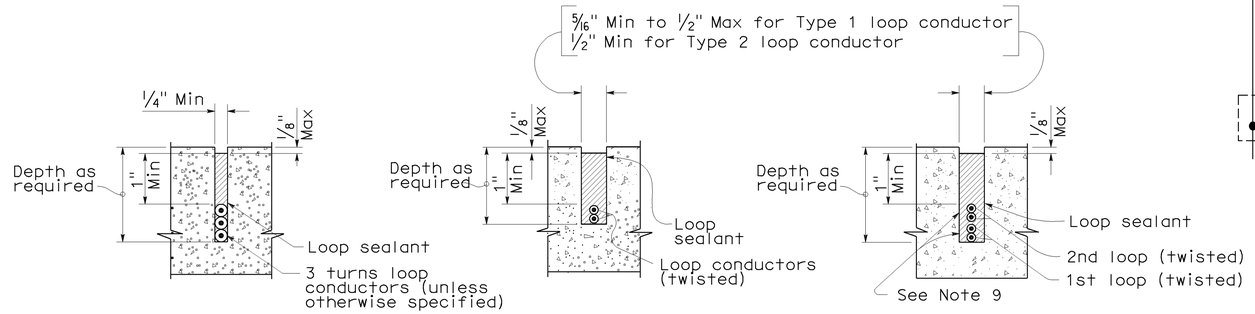

SECTION A-A | SECTION B-B | SECTION C-C

SLOT DETAILS - TYPE 1 AND TYPE 2 LOOP CONDUCTOR

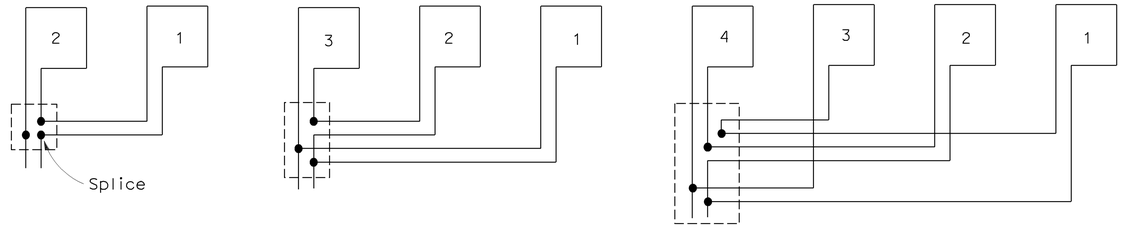

TYPICAL LOOP CONNECTIONS

(Dashed lines represent the pull box)

DIST	COUNTY	ROUTE	POST MILES TOTAL PROJECT	SHEET NO.	TOTAL SHEETS
04	Son	116,12	26.7, 9.2	44	58

Jeffery G. McRae
REGISTERED ELECTRICAL ENGINEER

October 5, 2007
PLANS APPROVAL DATE

REGISTERED PROFESSIONAL ENGINEER
Jeffery G. McRae
No. E14512
Exp. 6-30-08
ELECTRICAL
STATE OF CALIFORNIA

The State of California or its officers or agents shall not be responsible for the accuracy or completeness of electronic copies of this plan sheet.

To accompany plans dated 2-22-10

STATE OF CALIFORNIA
DEPARTMENT OF TRANSPORTATION

ELECTRICAL SYSTEMS (DETECTORS)

NO SCALE

RSP ES-5A DATED OCTOBER 5, 2007 SUPERCEDES STANDARD PLAN ES-5A
DATED MAY 1, 2006 - PAGE 423 OF THE STANDARD PLANS BOOK DATED MAY 2006.

REVISED STANDARD PLAN RSP ES-5A

2006 REVISED STANDARD PLAN RSP ES-5A

8-17-07

DIST	COUNTY	ROUTE	POST MILES TOTAL PROJECT	SHEET NO.	TOTAL SHEETS
04	Son	116,12	26.7, 9.2	45	58

REGISTERED CIVIL ENGINEER

October 5, 2007
PLANS APPROVAL DATE

REGISTERED PROFESSIONAL ENGINEER
Stanley P. Johnson
No. C57793
Exp. 3-31-08
CIVIL
STATE OF CALIFORNIA

The State of California or its officers or agents shall not be responsible for the accuracy or completeness of electronic copies of this plan sheet.

To accompany plans dated 2-22-10

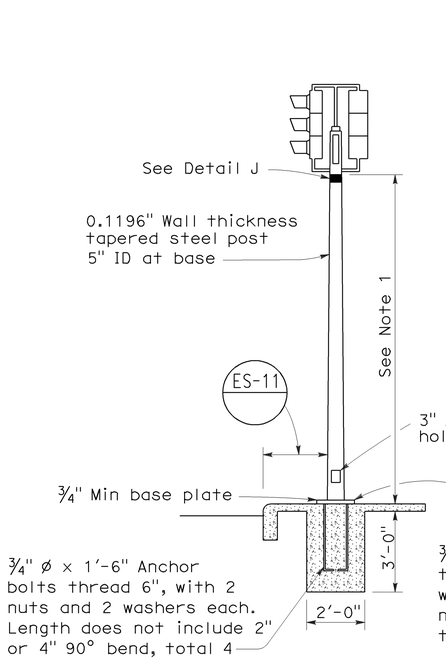

TYPE 1-A STANDARD

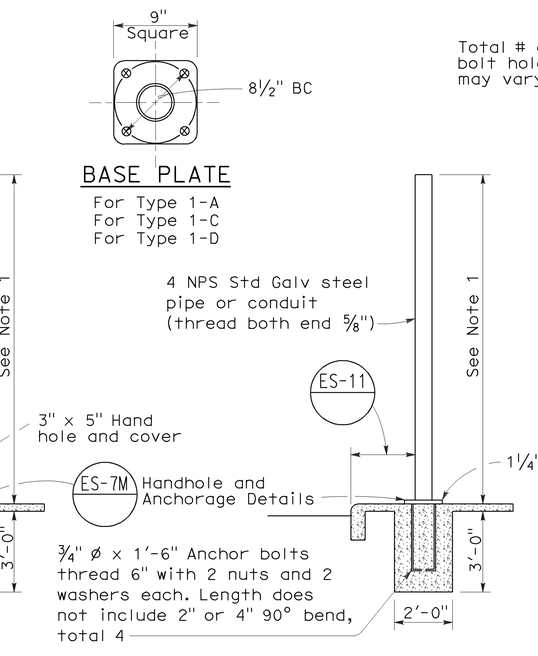

TYPE 1-B STANDARD

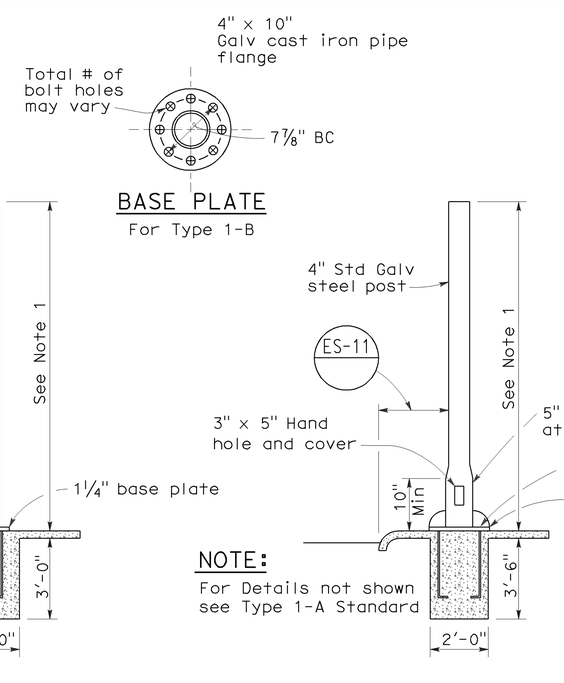

NOTE:
For Details not shown see Type 1-A Standard

TYPE 1-C STANDARD

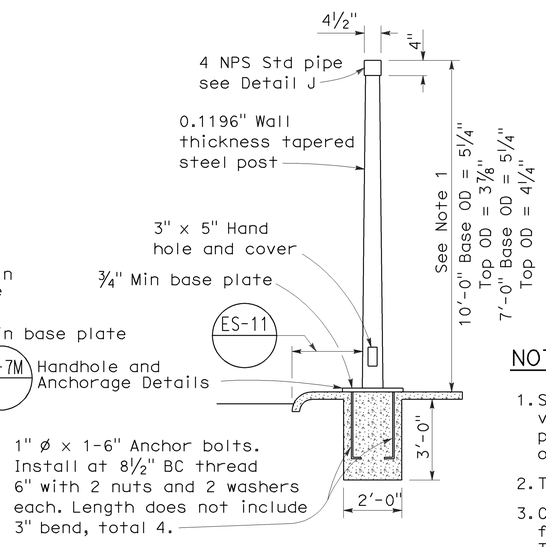

TYPE 1-D STANDARD

TYPE 1 SIGNAL STANDARDS

NOTES:

1. Standards shall be 10'-0" ± 2" for vehicle signals and 7'-0" ± 2" for pedestrian signals unless otherwise noted on plans.
2. Top of standards shall be 4½" OD.
3. Conduits shall extend 2" maximum above finished surface of foundation and for Types 1-A, 1-C and 1-D shall be sloped toward handhole.
4. Anchor bolts shall be bonded to conduit or grounding conductor.
5. Conduit between standard and adjacent pull box shall be 2" minimum.
6. Paint numbers on roadway side facing traffic when electrolier or post is left of direction of traffic.

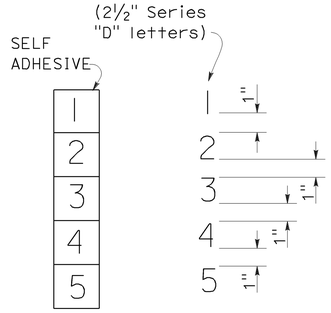

NUMBER DETAIL

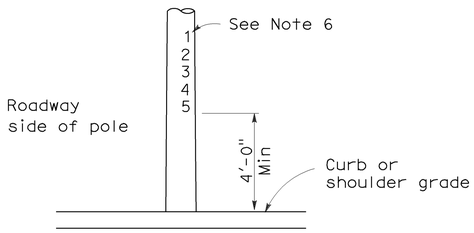

TYPICAL NUMBER FORMAT

LOCATION OF EQUIPMENT NUMBERS ON STANDARDS AND POSTS

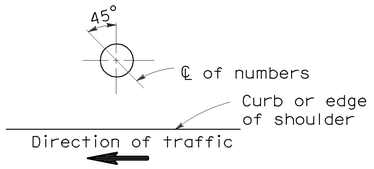

PLAN

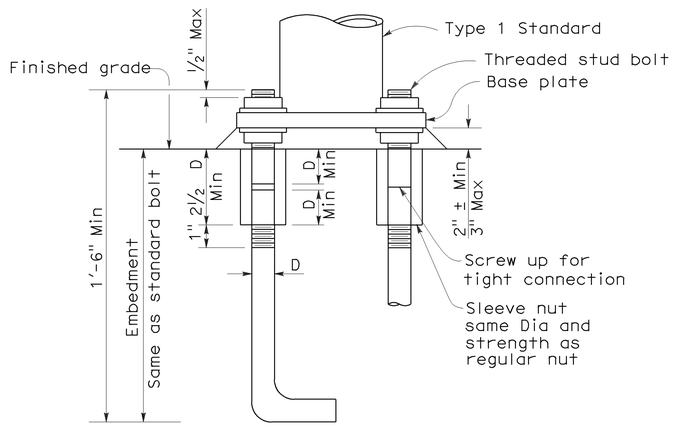

ANCHOR BOLTS WITH SLEEVE NUTS

Sleeve nuts to be used only when shown or specified on Project Plans

D = Diameter of anchor bolt

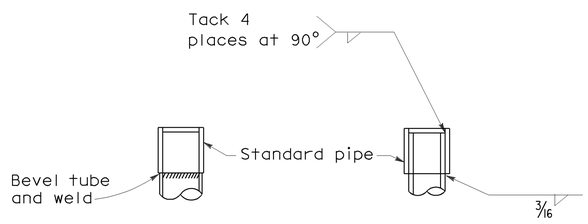

DETAIL J

Tube may be inserted into pipe or butted as required

STATE OF CALIFORNIA
DEPARTMENT OF TRANSPORTATION

ELECTRICAL SYSTEMS (SIGNAL AND LIGHTING STANDARD TYPE 1 STANDARD AND EQUIPMENT NUMBERING)

NO SCALE

RSP ES-7B DATED OCTOBER 5, 2007 SUPERCEDES STANDARD PLAN ES-7B DATED MAY 1, 2006 - PAGE 438 OF THE STANDARD PLANS BOOK DATED MAY 2006.

REVISED STANDARD PLAN RSP ES-7B

2006 REVISED STANDARD PLAN RSP ES-7B

7-10-07

DIST	COUNTY	ROUTE	POST MILES TOTAL PROJECT	SHEET NO.	TOTAL SHEETS
04	Son	116,12	26.7, 9.2	46	58

REGISTERED CIVIL ENGINEER

June 30, 2006
PLANS APPROVAL DATE

REGISTERED PROFESSIONAL ENGINEER — Jeffrey B. Woody — No. C41260 — Exp. 3-31-07 CIVIL — STATE OF CALIFORNIA

The State of California or its officers or agents shall not be responsible for the accuracy or completeness of electronic copies of this plan sheet.

To accompany plans dated 2-22-10

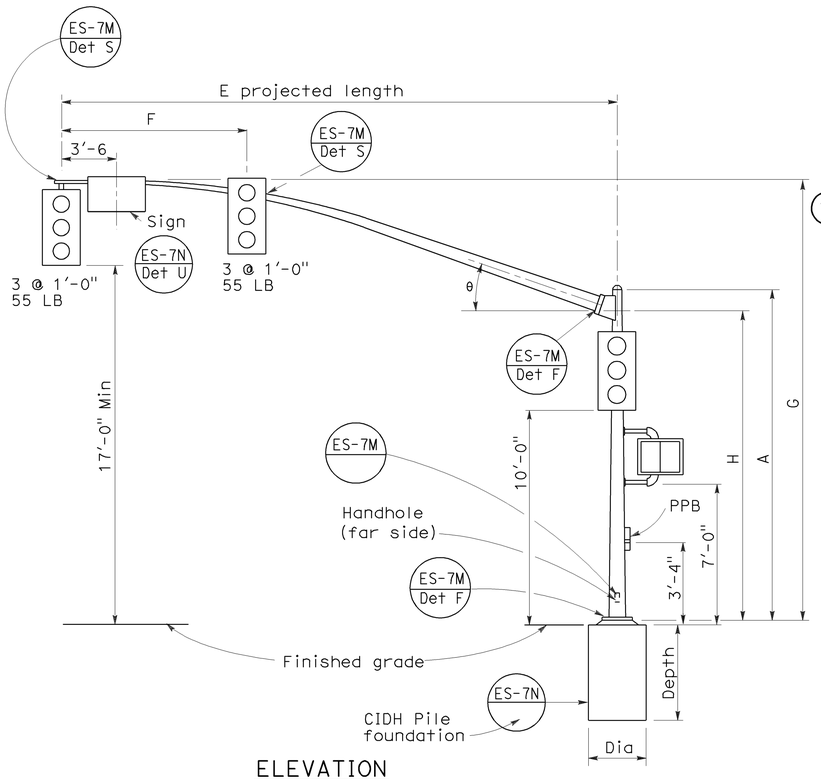

ELEVATION

TYPE 16-3-100, 18-3-100, 23-3-100, 27-3-100

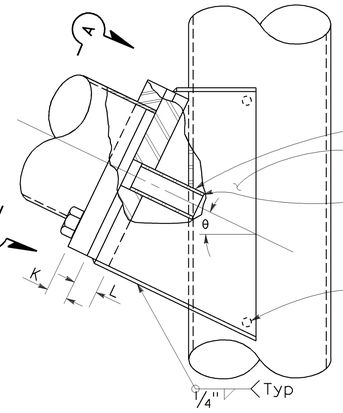

ELEVATION

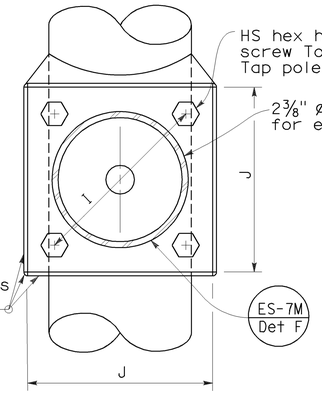

VIEW A-A

SIGNAL ARM CONNECTION DETAILS

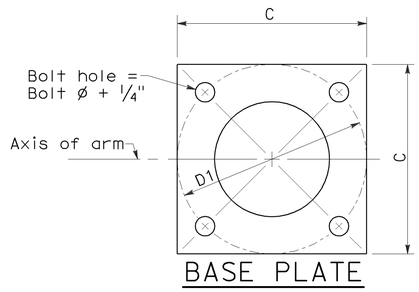

BASE PLATE

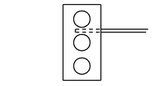

Type 17-3-100

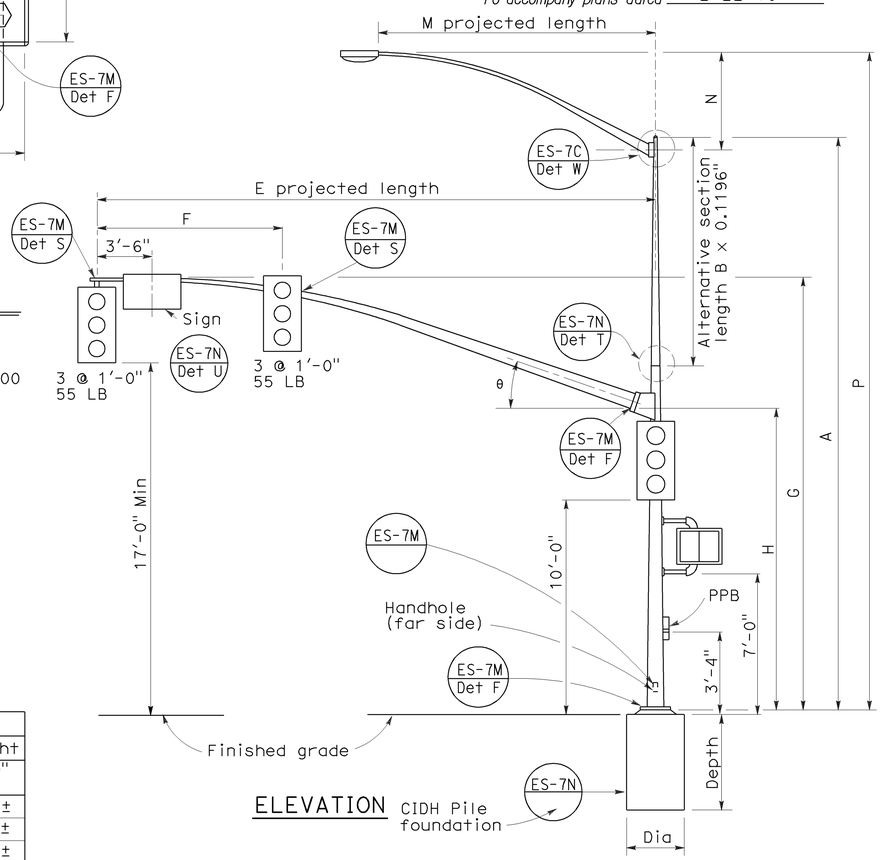

ELEVATION

TYPE 17-3-100, 24A-3-100, 19-3-100, 26-3-100, 19A-3-100, 26A-3-100, 24-3-100

SIGNAL ARM DATA

E Projected Length	F Min Spacing	G Mounting Height	H	Min OD At Pole	Thickness	I Bolt Circle	HS Cap Screws	J Plate Size	K Arm ℄ Thickness	L Pole ℄ Thickness	θ
15'-0"	8'-0"	21'-8"±	17'-6"	6⅝"	0.1793"	12"	1¼"-7NC-3	1'-0"	1¼"	1½"	23°
20'-0"		21'-8"±		7"							
25'-0"	12'-0"	22'-8"±	16'-0"	7⅝"	0.2391"						
30'-0"				8"							
35'-0"	14'-0"	23'-0"±		8¾"		13"		1'-1"	1½"	1¾"	21°
40'-0"	15'-0"			9⅜"							15°
45'-0"		23'-8"±		10 1/16"							

LUMINAIRE ARM DATA

M Projected Length	N Rise	Min OD at Pole	Thickness	P Mounting Height 30'-0" Pole	P Mounting Height 35'-0" Pole
6'-0"	2'-0"±	3¼"	0.1196"	31'-6"±	36'-6"±
8'-0"	2'-6"±	3½"		32'-0"±	37'-0"±
10'-0"	3'-3"±	3⅞"		32'-9"±	37'-9"±
12'-0"	4'-3"±			33'-9"±	38'-9"±
15'-0"	4'-9"±	4¼"		34'-3"±	39'-3"±

POLE DATA / BASE PLATE DATA / CIDH PILE FOUNDATION

Pole Type	Load Case	Wind Velocity mph	POLE DATA: A Height	Min OD Base	Min OD Top	Thickness	Alternative Section B Length	Alternative Section Bottom	Alternative Section Top	BASE PLATE DATA: C	D1 Bolt Circle	Thickness	Anchor Bolts Size	Luminaire Arm	Signal Arm	CIDH PILE FOUNDATION: Diameter	Depth	Reinforced
16-3-100	3	100	18'-6"	10¾"	8¼"	0.1793"	None			1'-6"	1'-5½"	1½"	2"ø × 42" × 6"	None	15'-0", 20'-0"	3'-0"	9'-0"	Yes
17-3-100			30'-0"		6⅝"		10'-0"	8"	7⅝"					6'-15' 12'-0"				
18-3-100			17'-0"	1'-0"	8 1/16"	0.2391"	None							None	25' -0", 30'-0"			
19-3-100			30'-0"		7⅞"		10'-0"	9¼"	7⅞"					6'-15' 12'-0"				
19A-3-100			35'-0"		7 3/16"		15'-0"		7 3/16"					6'-15' 15'-0"				
23-3-100			17'-0"		9⅝"		None							None	35'-0"			
24-3-100			30'-0"		7⅞"		10'-0"	9¼"	7⅞"					6'-15' 12'-0"				
24A-3-100			35'-0"		7 3/16"		15'-0"		7 3/16"					6'-15' 15'-0"				
26-3-100			30'-0"	1'-⅛"	8"	0.3125"	10'-0"	9⅜"	8"					6'-15' 12'-0"	40' -0", 45'-0"			
26A-3-100			35'-0"		7⅝"		15'-0"		7⅝"					6'-15' 15'-0"				
27-3-100			17'-0"		9¾"		None							None				

☐ Indicates arm length to be used unless otherwise noted on plans.

STATE OF CALIFORNIA
DEPARTMENT OF TRANSPORTATION

ELECTRICAL SYSTEMS (SIGNAL AND LIGHTING STANDARD CASE 3 ARM LOADING WIND VELOCITY=100 MPH ARM LENGTHS 15' TO 45')

NO SCALE

RSP ES-7E DATED JUNE 30, 2006 SUPERSEDES STANDARD PLAN DATED MAY 1, 2006 - PAGE 441 OF THE STANDARD PLANS BOOK DATED MAY 2006.

REVISED STANDARD PLAN RSP ES-7E

2006 REVISED STANDARD PLAN RSP ES-7E

5-9-06

DIST	COUNTY	ROUTE	POST MILES TOTAL PROJECT	SHEET NO.	TOTAL SHEETS
04	Son	116,12	26.7, 9.2	47	58

REGISTERED CIVIL ENGINEER

October 5, 2007
PLANS APPROVAL DATE

REGISTERED PROFESSIONAL ENGINEER — Stanley P. Johnson — No. C57793 — Exp. 3-31-08 — CIVIL — STATE OF CALIFORNIA

The State of California or its officers or agents shall not be responsible for the accuracy or completeness of electronic copies of this plan sheet.

To accompany plans dated 2-22-10

2006 REVISED STANDARD PLAN RSP ES-7F

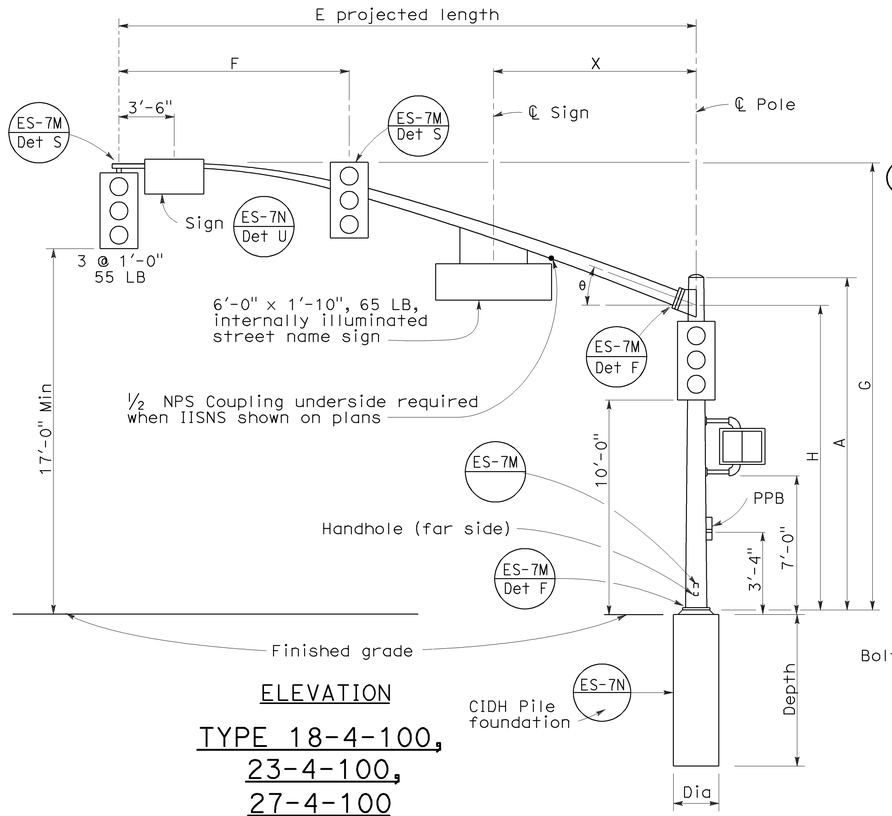

ELEVATION

TYPE 18-4-100, 23-4-100, 27-4-100

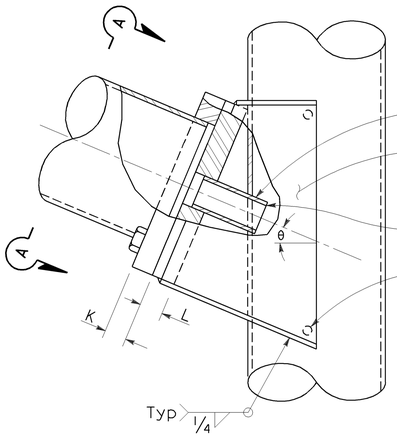

ELEVATION

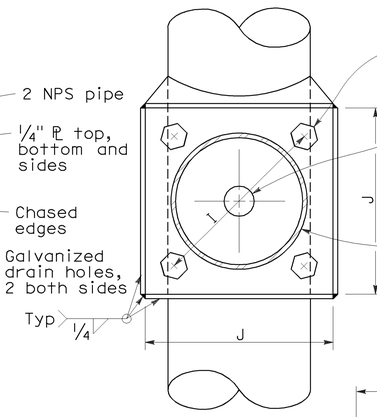

VIEW A-A

SIGNAL ARM CONNECTION DETAILS

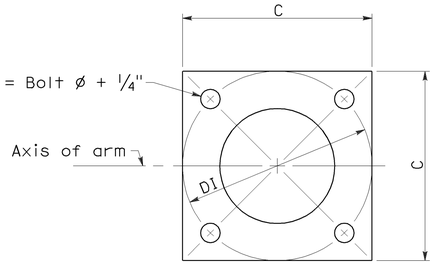

BASE PLATE

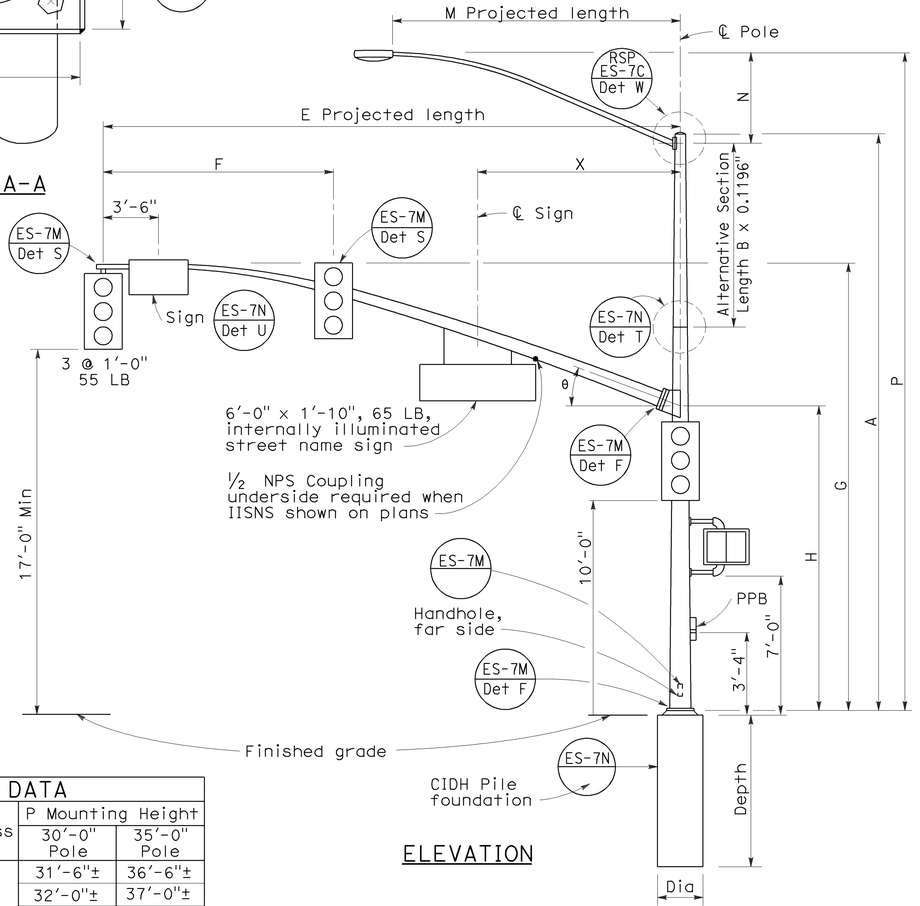

ELEVATION

TYPE 19-4-100, 19A-4-100, 24-4-100, 24A-4-100, 26-4-100, 26A-4-100

SIGNAL ARM DATA

E Projected Length	F Min Spacing	G Mounting Height	H	Min OD at Pole	Thickness	I Bolt Circle	HS Cap Screws	J Plate Size	K Arm ℙ Thickness	L Pole ℙ Thickness	θ	X Max
25'-0"	10'-0"	22'-8"±	16'-0"	7⅝"	0.2391"	12"	1¼"-7NC-3"	1'-0"	1¼"	1½"	23°	10'-6"
30'-0"	12'-0"			8"								
35'-0"	14'-0"	23'-0"±		8⅛"		13½"		1'-1½"	1½"	1¾"	21°	
40'-0"	15'-0"			9⅜"								
45'-0"		23'-8"±		10¼"							15°	13'-0"

LUMINAIRE ARM DATA

M Projected Length	N Rise	Min OD at Pole	Thickness	P Mounting Height 30'-0" Pole	P Mounting Height 35'-0" Pole
6'-0"	2'-0"±	3¼"	0.1196"	31'-6"±	36'-6"±
8'-0"	2'-6"±	3½"		32'-0"±	37'-0"±
10'-0"	3'-3"±	3⅜"		32'-9"±	37'-9"±
12'-0"	4'-3"±			33'-9"±	38'-9"±
15'-0"	4'-9"±	4¼"		34'-3"±	39'-3"±

POLE DATA / BASE PLATE DATA / CIDH PILE FOUNDATION

Pole Type	Load Case	Wind Velocity mph	A Height	Min OD Base	Min OD Top	Thickness	Alternative Section B Length	Alternative Section Bottom	Alternative Section Top	C	DI Bolt Circle	Thickness	Anchor Bolts Size	Luminaire Arm	Signal Arm	CIDH Pile Foundation Dia	Depth	Reinforced
18-4-100	4	100	17'-0"	12"	9"	0.2391"	None			1'-6"	1'-6"	1½"	2" ø x 42" x 6"	None	25'-0", [30'-0"]	3'-0"	9'-0"	Yes
19-4-100			30'-0"		8"		10'-0"	9⅜"	8"					6'-15' [12'-0"]				
19A-4-100			35'-0"		7⅝"		15'-0'		7⅝"					6'-15' [15'-0"]				
23-4-100			17'-0"		9"		None							None	35'-0"			
24-4-100			30'-0"		8"		10'-0"	9⅜"	8"					6'-15' [12'-0"]				
24A-4-100			35'-0"		7⅝"		15'-0"		7⅝"					6'-15' [15'-0"]				
26-4-100			30'-0"	12½"	8"	0.3125"	10'-0"	9¾"	8⅜"					6'-15' [12'-0"]	40'-0", [45'-0"]			
26A-4-100			35'-0"		7⅝"		15'-0"		7⅞"					6'-15' [15'-0"]				
27-4-100			17'-0"		9¾"		None							None				

☐ Indicates arm length to be used unless otherwise noted on plans.

STATE OF CALIFORNIA
DEPARTMENT OF TRANSPORTATION

ELECTRICAL SYSTEMS (SIGNAL AND LIGHTING STANDARD CASE 4 ARM LOADING WIND VELOCITY=100 MPH ARM LENGTHS 25' TO 45')

NO SCALE

RSP ES-7F DATED OCTOBER 5, 2007 SUPERCEDES RSP ES-7F DATED NOVEMBER 17, 2006 AND STANDARD PLAN ES-7F DATED MAY 1, 2006 - PAGE 442 OF THE STANDARD PLANS BOOK DATED MAY 2006.

REVISED STANDARD PLAN RSP ES-7F

7-10-07

DIST	COUNTY	ROUTE	POST MILES TOTAL PROJECT	SHEET NO.	TOTAL SHEETS
04	Son	116,12	26.7, 9.2	48	58

Randell D. Hiatt
REGISTERED CIVIL ENGINEER

June 6, 2008
PLANS APPROVAL DATE

Randell D. Hiatt
No. C50200
Exp. 6-30-09
CIVIL
REGISTERED PROFESSIONAL ENGINEER
STATE OF CALIFORNIA

The State of California or its officers or agents shall not be responsible for the accuracy or completeness of electronic copies of this plan sheet.

To accompany plans dated 2-22-10

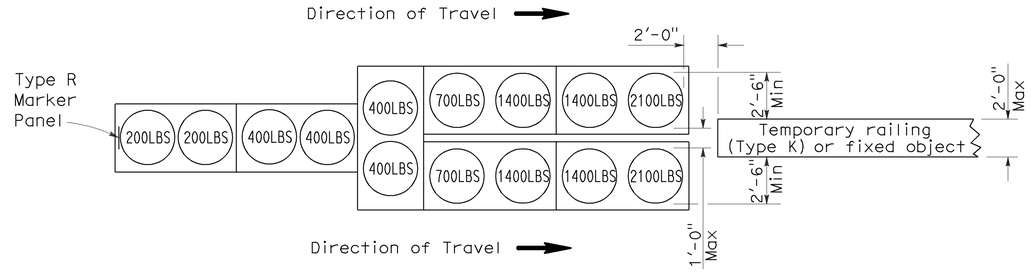

ARRAY 'TU14'

Approach speed 45 mph or more

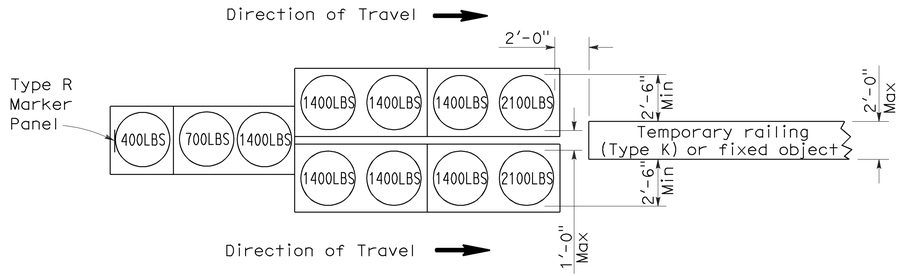

ARRAY 'TU11'

Approach speed less than 45 mph

ARRAY 'TU21'

Approach speed 45 mph or more

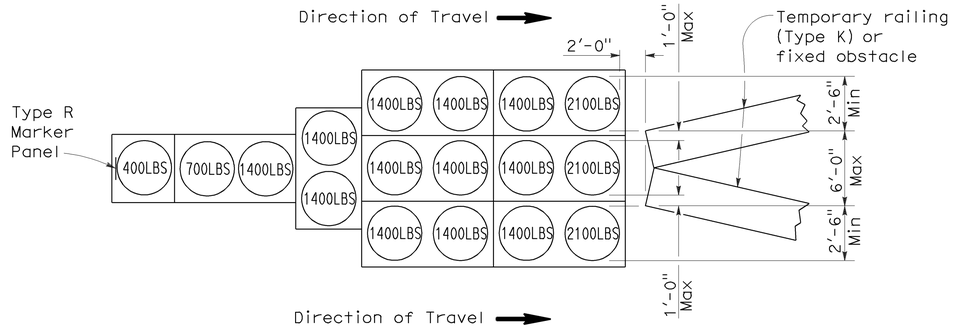

ARRAY 'TU17'

Approach speed less than 45 mph

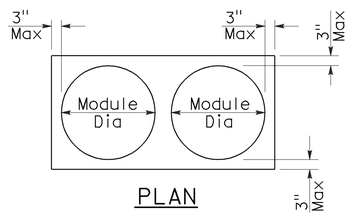

PLAN

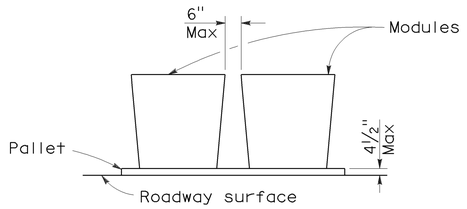

ELEVATION

CRASH CUSHION PALLET DETAIL

See Note 7

NOTES:

1. (XXX) Indicates sand filled module location and weight of sand in pounds for each module. Module spacing is based on the greater diameter of the module.
2. All sand weights are nominal.
3. Temporary crash cushion arrays shall not encroach on the traveled way.
4. Place the top of Type R marker panel 1" below the module lid.
5. Refer to Standard Plan A73B for marker details.
6. Approach speeds indicated conform to NCHRP 350 Report criteria.
7. Use of pallets is optional.

STATE OF CALIFORNIA
DEPARTMENT OF TRANSPORTATION

TEMPORARY CRASH CUSHION, SAND FILLED (UNIDIRECTIONAL)

NO SCALE

RSP T1A DATED JUNE 6, 2008 SUPERSEDES STANDARD PLAN T1A
DATED MAY 1, 2006 - PAGE 211 OF THE STANDARD PLANS BOOK DATED MAY 2006.

REVISED STANDARD PLAN RSP T1A

2006 REVISED STANDARD PLAN RSP T1A

5-15-08

DIST	COUNTY	ROUTE	POST MILES TOTAL PROJECT	SHEET NO.	TOTAL SHEETS
04	Son	116,12	26.7, 9.2	49	58

Randell D. Hiatt
REGISTERED CIVIL ENGINEER

June 6, 2008
PLANS APPROVAL DATE

REGISTERED PROFESSIONAL ENGINEER — Randell D. Hiatt — No. C50200 — Exp. 6-30-09 — CIVIL — STATE OF CALIFORNIA

The State of California or its officers or agents shall not be responsible for the accuracy or completeness of electronic copies of this plan sheet.

To accompany plans dated 2-22-10

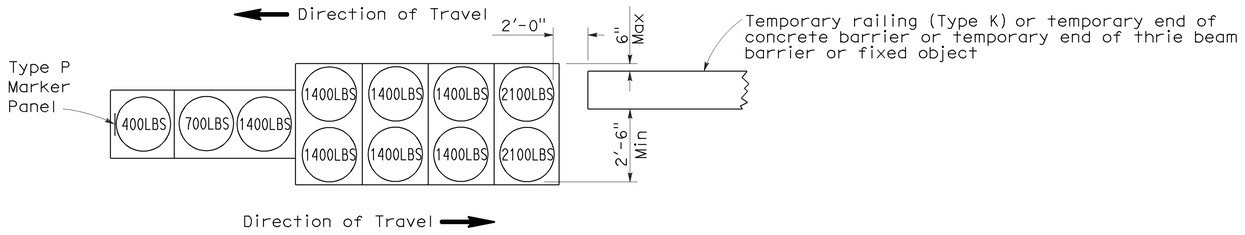

ARRAY 'TB11'

Approach speed less than 45 mph

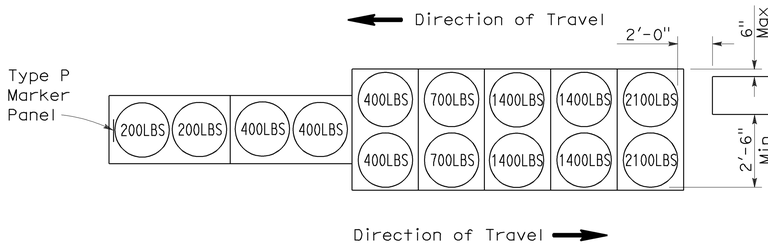

ARRAY 'TB14'

Approach speed 45 mph or more

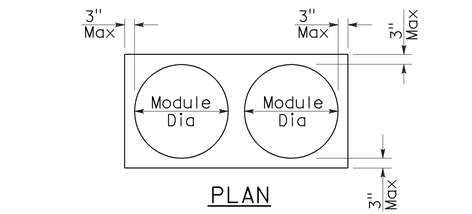

CRASH CUSHION PALLET DETAIL

See Note 7

NOTES:

1. (XXX) Indicates sand filled module location and weight of sand in pounds for each module. Module spacing is based on the greater diameter of the module.
2. All sand weights are nominal.
3. Temporary crash cushion arrays shall not encroach on the traveled way.
4. Place the Type P marker panel so that the bottom of the panel rests upon the pallet.
5. Refer to Standard Plan A73B for marker details.
6. Approach speeds indicated conform to NCHRP 350 Report criteria.
7. Use of pallets is optional.

STATE OF CALIFORNIA
DEPARTMENT OF TRANSPORTATION

TEMPORARY CRASH CUSHION, SAND FILLED (BIDIRECTIONAL)

NO SCALE

RSP T1B DATED JUNE 6, 2008 SUPERSEDES STANDARD PLAN T1B
DATED MAY 1, 2006 - PAGE 212 OF THE STANDARD PLANS BOOK DATED MAY 2006.

REVISED STANDARD PLAN RSP T1B

2006 REVISED STANDARD PLAN RSP T1B

5-15-08

DIST	COUNTY	ROUTE	POST MILES TOTAL PROJECT	SHEET NO.	TOTAL SHEETS
04	Son	116,12	26.7, 9.2	50	58

Randell D. Hiatt
REGISTERED CIVIL ENGINEER

June 6, 2008
PLANS APPROVAL DATE

REGISTERED PROFESSIONAL ENGINEER
Randell D. Hiatt
No. C50200
Exp. 6-30-09
CIVIL
STATE OF CALIFORNIA

The State of California or its officers or agents shall not be responsible for the accuracy or completeness of electronic copies of this plan sheet.

To accompany plans dated 2-22-10

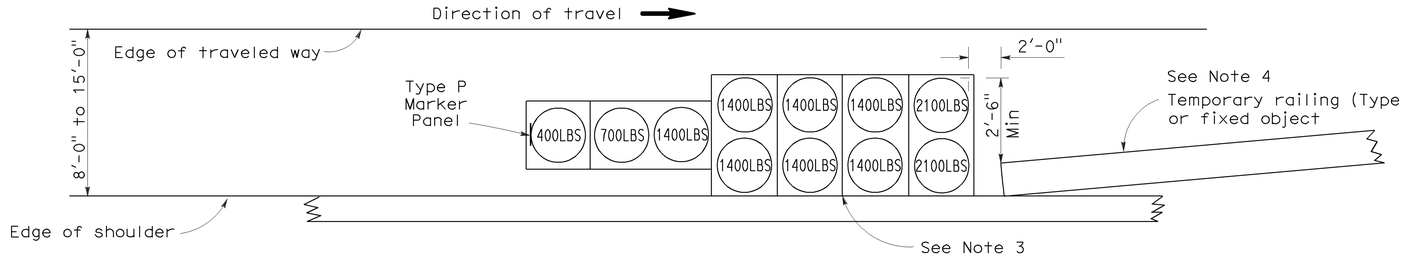

ARRAY 'TS11'

Approach speed less than 45 mph
See Note 9

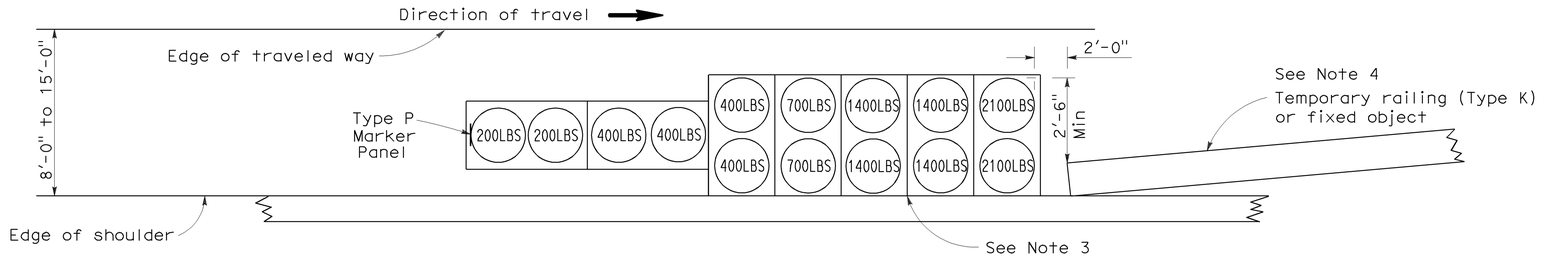

ARRAY 'TS14'

Approach speed 45 mph or more
See Note 9

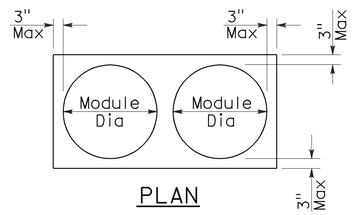

PLAN

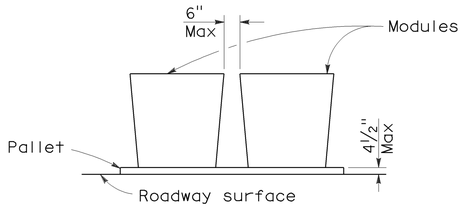

ELEVATION

CRASH CUSHION PALLET DETAIL

See Note 11

NOTES:

1. (XXX) Indicates sand filled module location and weight of sand in pounds for each module. Module spacing is based on the greater diameter of the module.
2. All sand weights are nominal.
3. The temporary crash cushion arrays shown on this plan shall be used only in locations where there will be traffic on one side of the temporary crash cushion array.
4. If the fixed object or approach end of the temporary railing is less than 15'-0" from the edge of traveled way, a temporary crash cushion is required in a construction or work zone.
5. Temporary crash cushion arrays shall not encroach on the traveled way.
6. Arrays for median shoulders shall conform to details shown on this plan for outside shoulders.
7. Place the Type P marker panel so that the bottom of the panel rests upon the pallet and faces traffic.
8. Refer to Standard Plan A73B for marker details.
9. For shoulder widths less than 8'-0", appropriate approved crash cushion protection, other than sand filled modules, shall be provided at fixed objects and at approach ends of temporary railing. The specific type of crash cushion shall be as shown on the project plans or as specified in the Special Provisions, or if not shown on the project plans or specified in the Special Provisions, shall be as approved by the Engineer.
10. Approach speeds indicated conform to NCHRP 350 Report criteria.
11. Use of pallets is optional.

STATE OF CALIFORNIA
DEPARTMENT OF TRANSPORTATION

TEMPORARY CRASH CUSHION, SAND FILLED (SHOULDER INSTALLATIONS)

NO SCALE

RSP T2 DATED JUNE 6, 2008 SUPERSEDES STANDARD PLAN T2
DATED MAY 1, 2006 - PAGE 213 OF THE STANDARD PLANS BOOK DATED MAY 2006.

REVISED STANDARD PLAN RSP T2

2006 REVISED STANDARD PLAN RSP T2

5-15-08

DIST	COUNTY	ROUTE	POST MILES TOTAL PROJECT	SHEET NO.	TOTAL SHEETS
04	Son	116,12	26.7, 9.2	51	58

Greg W. Edwards
REGISTERED CIVIL ENGINEER

November 17, 2006
PLANS APPROVAL DATE

REGISTERED PROFESSIONAL ENGINEER — Greg W. Edwards — No. C36386 — Exp. 6-30-08 CIVIL — STATE OF CALIFORNIA

The State of California or its officers or agents shall not be responsible for the accuracy or completeness of electronic copies of this plan sheet.

To accompany plans dated 2-22-10

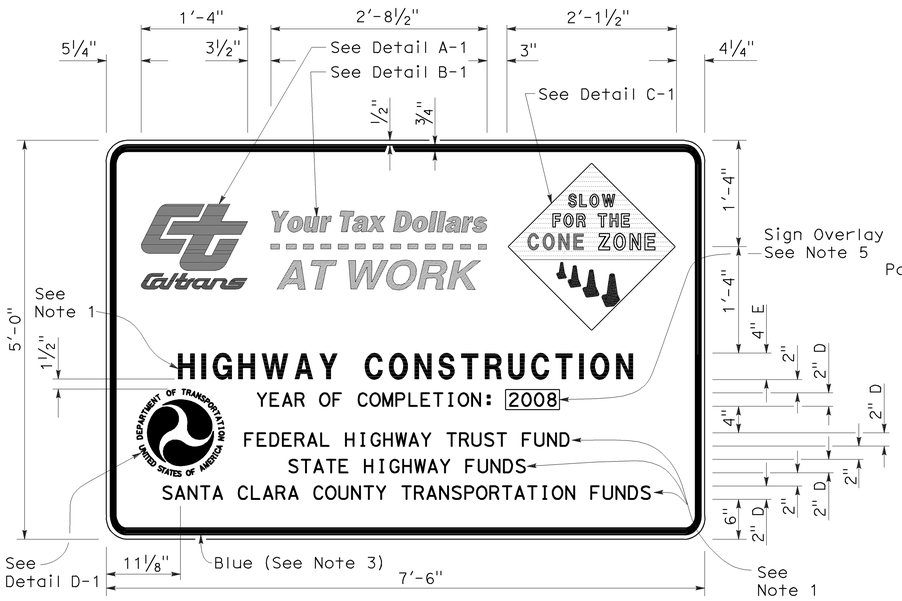

TYPE 1

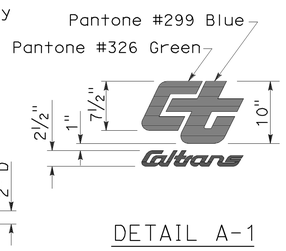

DETAIL A-1

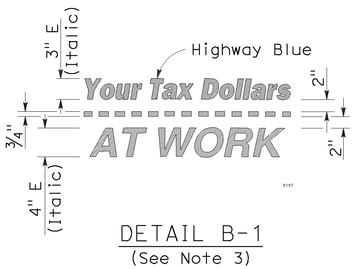

DETAIL B-1
(See Note 3)

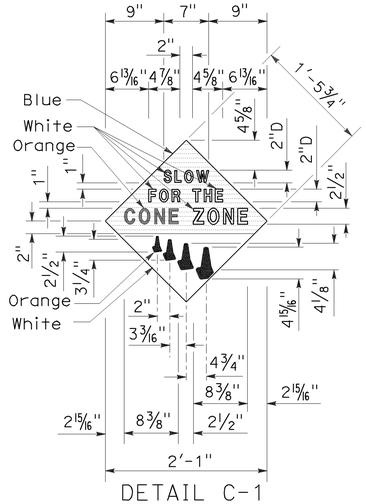

DETAIL C-1
(See Note 4)

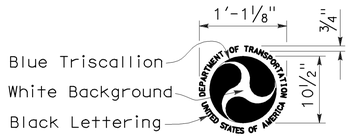

DETAIL D-1
(See Note 6)

NOTES:

1. The sign messages shown for type of project and fund types are examples only. See the Special Provisions for the applicable type of project and fund type messages to be used.
2. Except as otherwise shown, the legend of sign shall be black on a white background (non-reflective).
3. The border of the signs and details "B-1" and "B-2" shall be blue (non-reflective).
4. The diamond in details "C-1" and "C-2" shall be blue for the background of message, " SLOW FOR THE CONE ZONE", and white background for the orange cones. The color and type of font for the "SLOW FOR THE CONE ZONE" message shall be: "SLOW" white D; "FOR THE" white D; "CONE" orange Arial font; "ZONE" white Arial font.
5. Year of completion of project construction shown on the overlay is an example only. See the Special Provisions.
6. Use when the Project involves Federal Highway Trust Fund.

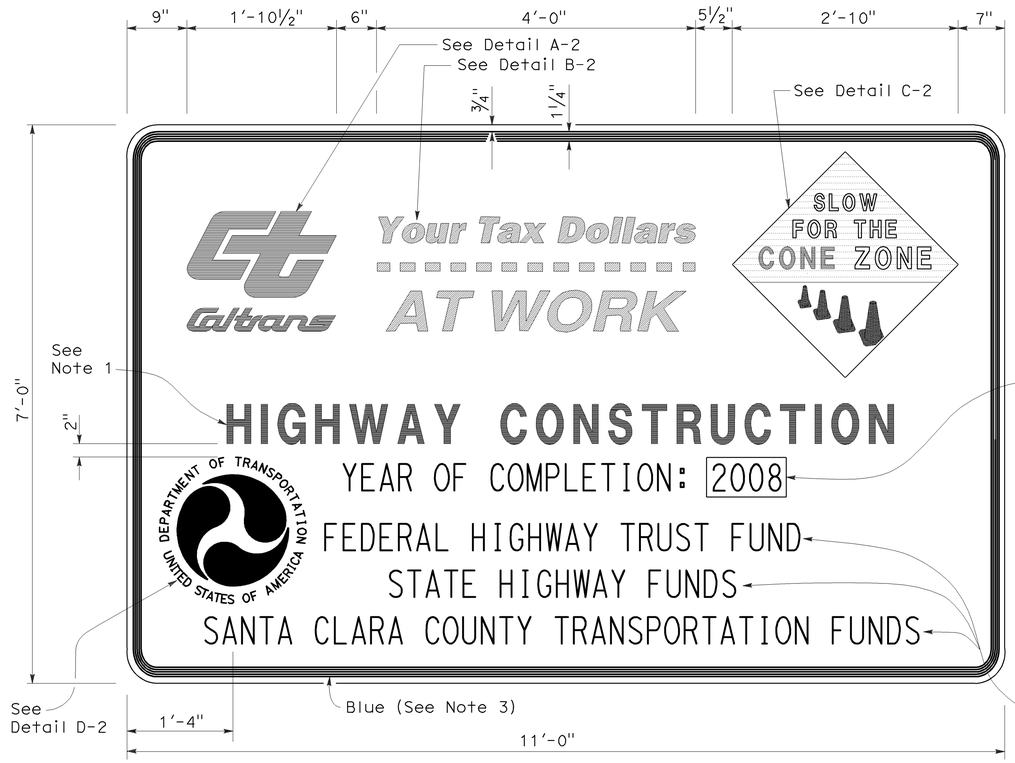

TYPE 2

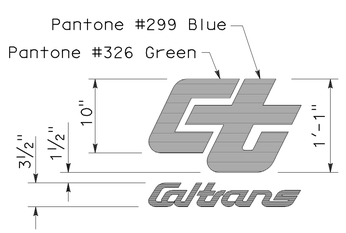

DETAIL A-2

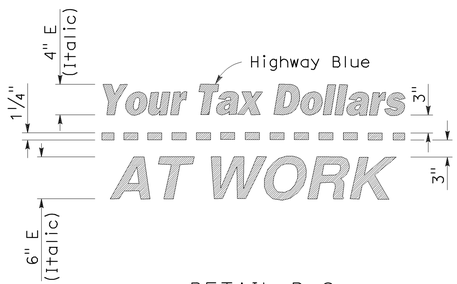

DETAIL B-2
(See Note 3)

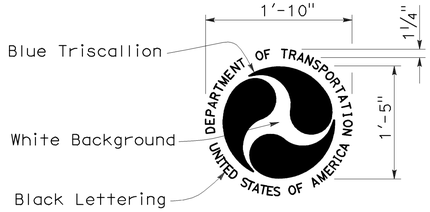

DETAIL D-2
(See Note 6)

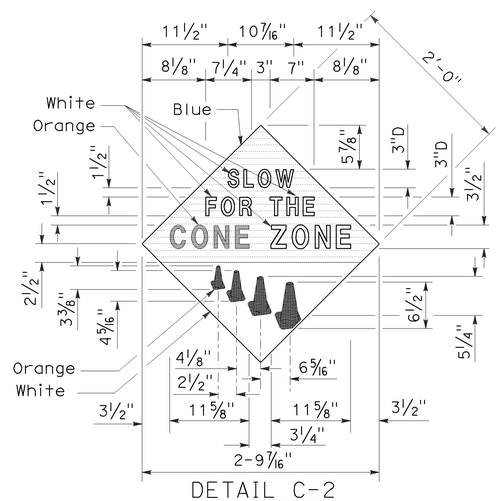

DETAIL C-2
(See Note 4)

STATE OF CALIFORNIA
DEPARTMENT OF TRANSPORTATION

CONSTRUCTION PROJECT FUNDING IDENTIFICATION SIGNS

NO SCALE

RSP T7 DATED NOVEMBER 17, 2006 SUPERSEDES STANDARD PLAN T7
DATED MAY 1, 2006 - PAGE 217 OF THE STANDARD PLANS BOOK DATED MAY 2006.

REVISED STANDARD PLAN RSP T7

2006 REVISED STANDARD PLAN RSP T7

9-7-06

DIST	COUNTY	ROUTE	POST MILES TOTAL PROJECT	SHEET NO.	TOTAL SHEETS
04	Son	116,12	26.7, 9.2	52	58

Robert B Schott
LICENSED LANDSCAPE ARCHITECT

April 3, 2009
PLANS APPROVAL DATE

The State of California or its officers or agents shall not be responsible for the accuracy or completeness of electronic copies of this plan sheet.

LICENSED LANDSCAPE ARCHITECT — Robert B. Schott 3825 — Signature — 11-30-10 Renewal Date — 2-25-09 Date — STATE OF CALIFORNIA

To accompany plans dated 2-22-10

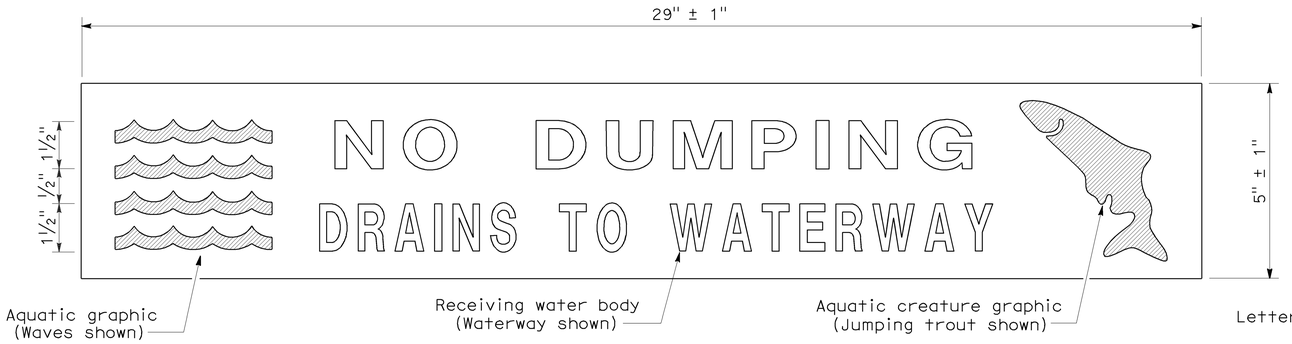

PLAN
DRAINAGE INLET MARKER
(PREFABRICATED THERMOPLASTIC)

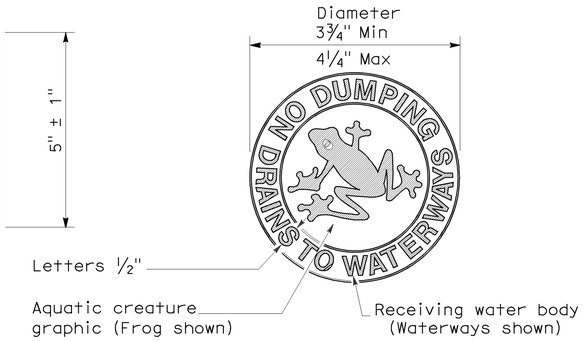

PLAN
DRAINAGE INLET MARKER
(MEDALLION)

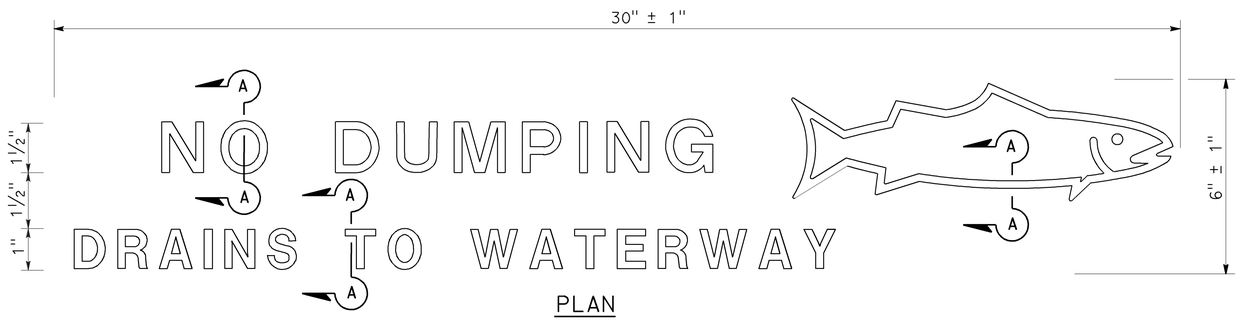

PLAN
DRAINAGE INLET MARKER
(STAMPED CONCRETE IMPRINT)

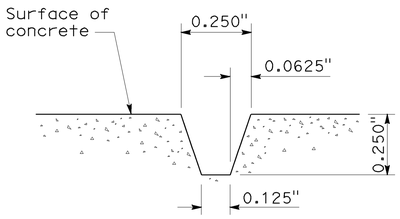

SECTION A-A
STAMPED CONCRETE
IMPRINT DETAIL

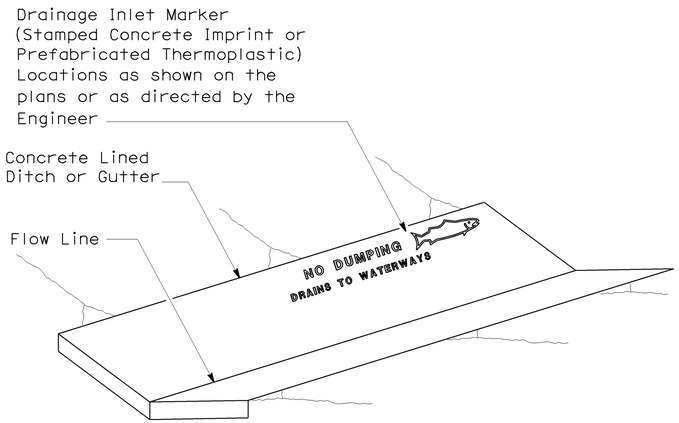

PERSPECTIVE
DRAINAGE INLET MARKER ON
CONCRETE LINED DITCH

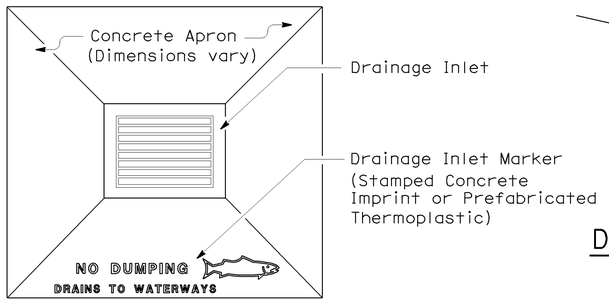

PLAN
DRAINAGE INLET MARKER ON
DRAINAGE INLET APRON

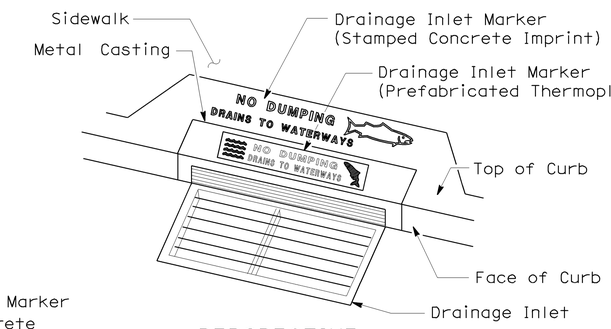

PERSPECTIVE
DRAINAGE INLET MARKER ON
DRAINAGE INLET

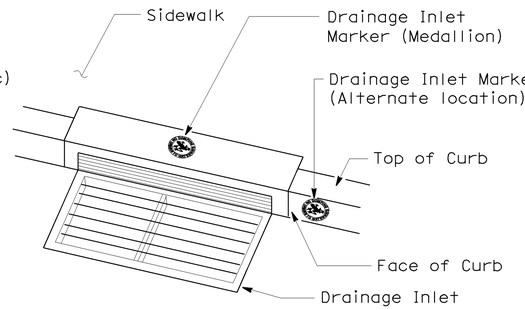

PERSPECTIVE
DRAINAGE INLET MARKER (MEDALLION)
ON DRAINAGE INLET

STATE OF CALIFORNIA
DEPARTMENT OF TRANSPORTATION

DRAINAGE INLET MARKERS

NO SCALE

NSP D71 DATED APRIL 3, 2009 SUPPLEMENTS
THE STANDARD PLANS BOOK DATED MAY 2006.

NEW STANDARD PLAN NSP D71

2006 NEW STANDARD PLAN NSP D71

7-24-08

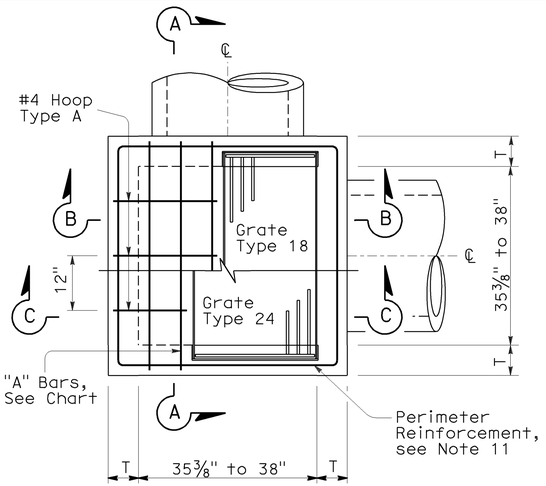

STANDARD TYPE G2 OR G4

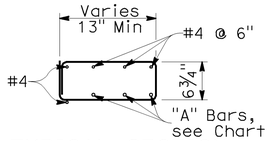

TYPICAL SECTION
(HOOP TYPE A)

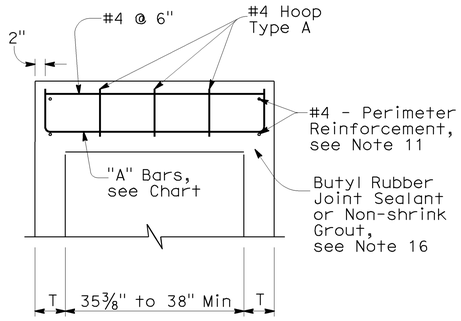

SECTION A-A

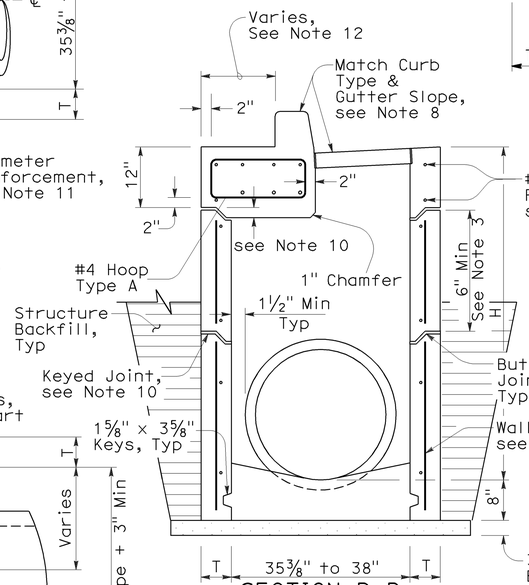

SECTION B-B
(with G4 Top)

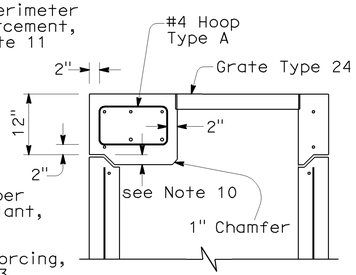

SECTION C-C
(with G2 Top)

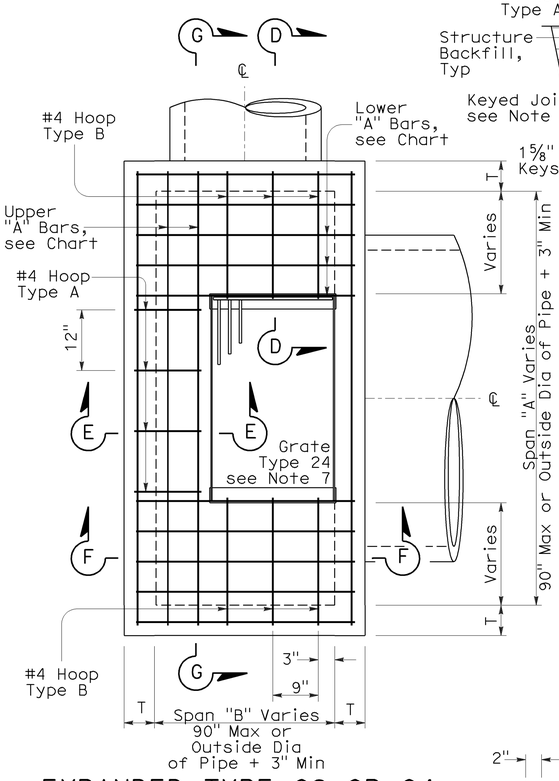

EXPANDED TYPE G2 OR G4
(Top Rebar Not Shown)

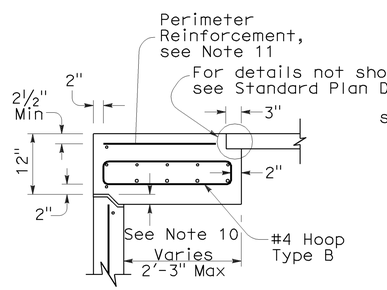

SECTION E-E
(with G4 Top)

SECTION D-D

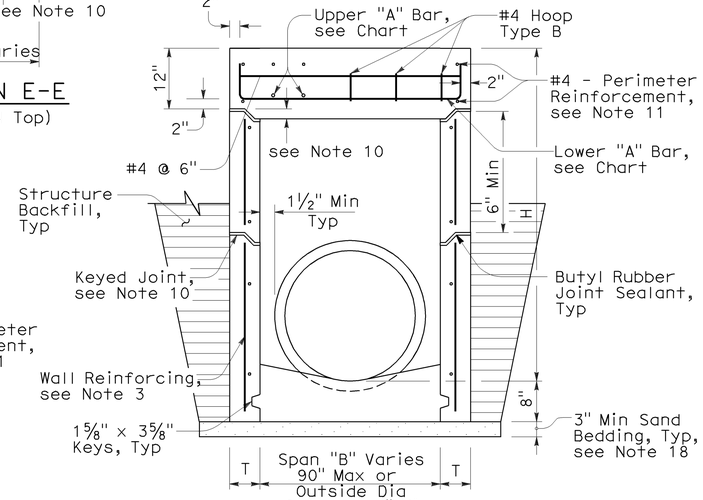

SECTION F-F
(with G2 Top)

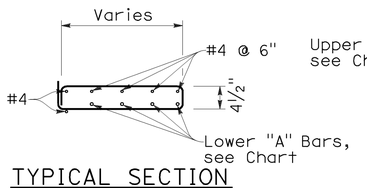

TYPICAL SECTION
(HOOP TYPE B)

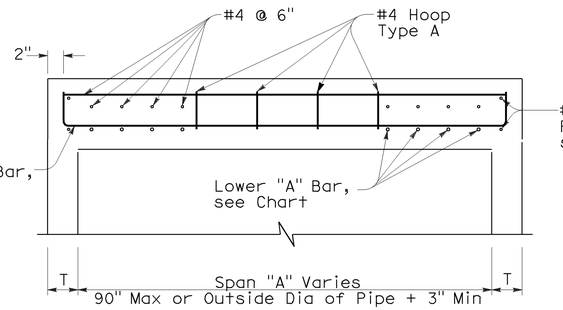

SECTION G-G

To accompany plans dated 2-22-10

NOTES:

1. "H" is the difference in elevation between the outlet pipe flow line and the normal gutter grade line undepressed.
2. For "T" wall thickness: T=6" when "H" is 8' or less. T=8" when "H" is over 8'.
3. Wall reinforcing not required when "H" is 8' or less and the unsupported width or length is 6'-0" or less. Reinforce wall exceeding these limits with #4 bars @ 1'-6" ± centers placed 2" clear to the inside of inlet unless otherwise shown. Short independent wall sections or height adjustment rings 6" to 24" high must have a minimum of two #4 horizontal bars.
4. Seal pre-cast inlets connection openings between wall and pipe with non-shrink grout or resilient connectors as specified in the Special Provisions.
5. Steps - None required where "H" is less than 2'-6". Where "H" is 2'-6" or more, install steps with lowest rung 1'-0" above the floor and highest rung not more than 6" below bottom of lid. The distance between steps must not exceed 1'-0" and be uniform throughout the length of the wall. Place steps in the wall without an opening. Steps inserts may be substituted for the bar steps. Step inserts must comply with State Industrial Safety Requirements. See Standard Plan D74C for step details.
6. Pipe(s) can be placed in any wall.
7. Set inlet so that grate bars are parallel to direction of principal surface flow.
8. Type G4 inlet can use Grate Type 18 or 24. Type G2 inlet uses Grate Type 24. See Revised Standard Plan RSP D77A and Standard Plan D77B for grate and frame details and weights of miscellaneous Iron and Steel.
9. G4 inlet details are the same as the G2 with the addition of a curb and sloped grate that matches the adjacent curb and gutter depression. See Standard Plans D78A & D78B for gutter and inlet depresssion details. See Revised Standard Plan RSP A87A & Standard Plan A87B for Curb and Dike Details.
10. Provide pre-cast inlets with separate top sections for final grade adjustment under Standard Specifcation Section 51-1.02. Provide keyed joints between the top and wall and multiple wall sections. Joint design may vary but must be 1" to 3" in depth.
11. Perimeter reinforcement serves as a rigid frame to position and attach the required structural reinforcement and may be tack welded at outer corners when using ASTM A706 weldable bars.
12. This dimension will vary with different grates, curbs types, box width and wall thickness.
13. 2" unless inlet is expanded in the Span "A" direction, then clearance is 2" plus the diameter of the lower "A" bar.
14. Place "A" Bars at an angle so hooked ends will maintain 2" clear coverage.
15. Refer to Standard Plan D73, Table A for concrete quantities.
16. Non-shrink grout can be used for upper most joint to facilitate final top grade adjustment.
17. Slope inlet floors 4:1 towards the outlet pipe. Pre-cast inlets may have monolithic sloped floors, flat floors, or no floors in which case a sloped floor must be cast in the field. Inlet floors do not require reinforcing.
18. Extend sand bedding under all structure backfill.

DIST	COUNTY	ROUTE	POST MILES TOTAL PROJECT	SHEET NO.	TOTAL SHEETS
04	Son	116,12	26.7, 9.2	53	58

REGISTERED CIVIL ENGINEER

June 5, 2009
PLANS APPROVAL DATE

Glenn DeCou
No. C34547
Exp. 9-30-09
CIVIL
REGISTERED PROFESSIONAL ENGINEER
STATE OF CALIFORNIA

The State of California or its officers or agents shall not be responsible for the accuracy or completeness of electronic copies of this plan sheet.

TOP REINFORCEMENT CHART

Span	"A" Bars	Required steel area per foot (in^2/ft)
Under 38" with Type 24 Grate	#5 @ 7" C-C 2-#5 Min	0.525
Under 38" with Type 18 Grate	#5 @ 7" C-C 3-#5 Min	0.525
38"-60"	#5 @ 6" C-C	0.621
61"-72"	#5 @ 5" C-C	0.744
73"-90"	#6 @ 6" C-C	0.811

STATE OF CALIFORNIA
DEPARTMENT OF TRANSPORTATION

DRAINAGE INLETS (PRECAST)

NO SCALE

NSP D73A DATED JUNE 5, 2009 SUPPLEMENTS THE STANDARD PLANS BOOK DATED MAY 2006.

NEW STANDARD PLAN NSP D73A

2006 NEW STANDARD PLAN NSP D73A

3-16-09

DIST	COUNTY	ROUTE	POST MILES TOTAL PROJECT	SHEET NO.	TOTAL SHEETS
04	Son	116,12	26.7, 9.2	54	58

Raymond Don Tsztoo
REGISTERED CIVIL ENGINEER

March 7, 2008
PLANS APPROVAL DATE

REGISTERED PROFESSIONAL ENGINEER
Raymond Don Tsztoo
No. C37332
Exp. 6-30-08
CIVIL
STATE OF CALIFORNIA

The State of California or its officers or agents shall not be responsible for the accuracy or completeness of electronic copies of this plan sheet.

To accompany plans dated 2-22-10

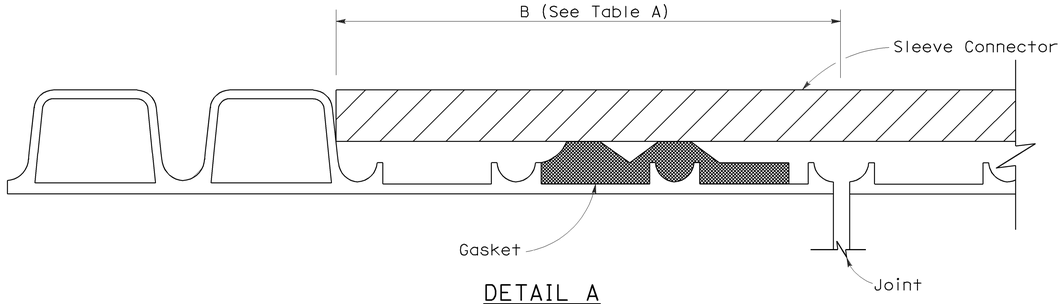

DETAIL A

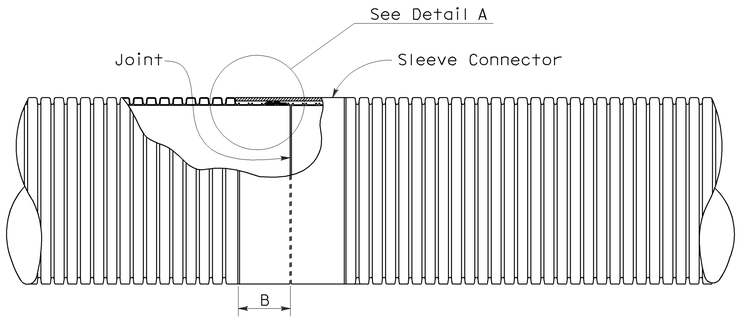

PLAN VIEW
Liner Insert
See Note 4

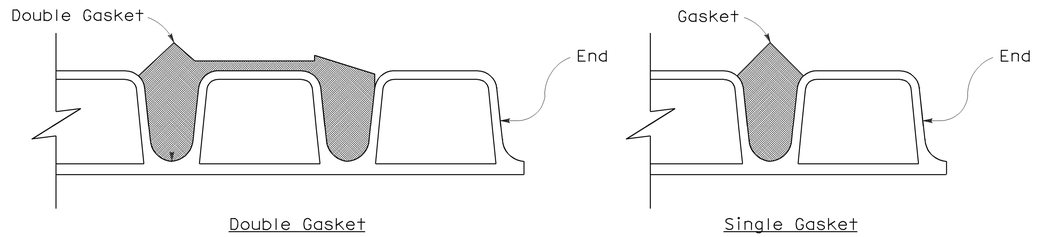

Double Gasket

Single Gasket

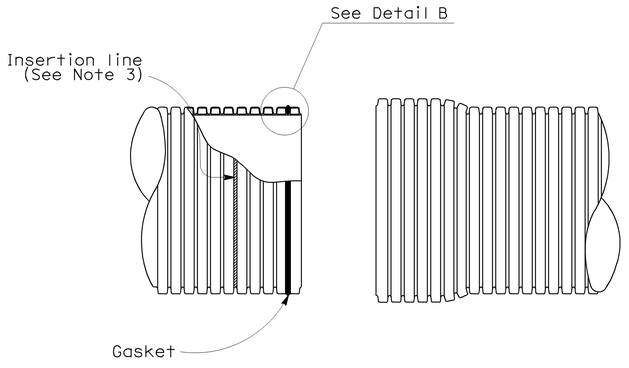

SPIGOT

BELL

DETAIL B

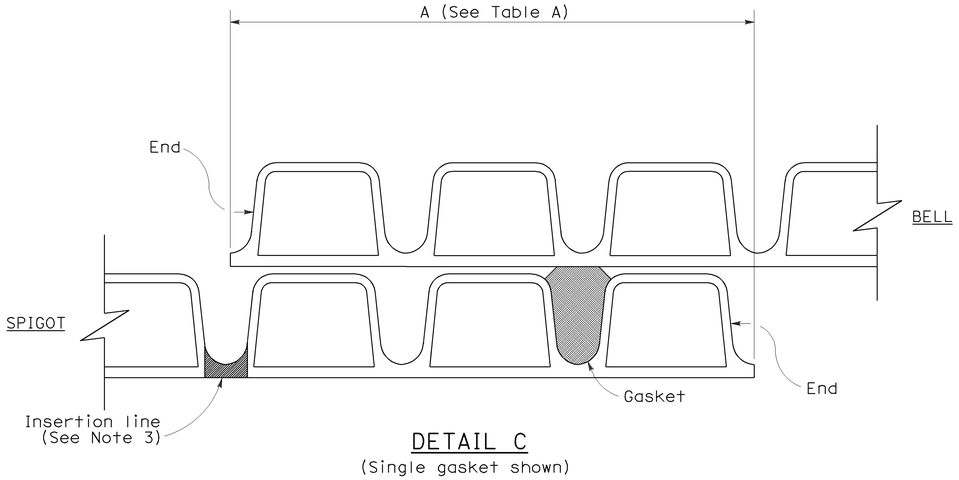

DETAIL C
(Single gasket shown)

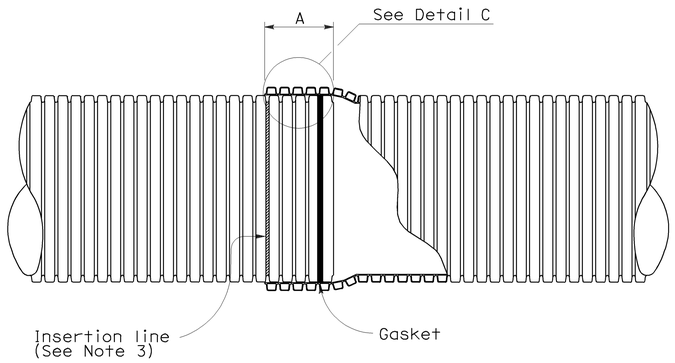

BELL AND SPIGOT JOINT

NOTES:

1. For pipe sections installed on straight alignment, the pipe sections shall be joined to achieve maxium joint overlap at all points on the periphery as indicated in Table A where the plans call for positive or watertight joints. Maxium joint overlap is recommended where the plans call for standard joints, but in no case shall the joint overlap be less than 3½".
2. For pipe sections installed on curved alignment, the maxium angle of deflection from straight alignment at any joint shall not exceed two degrees. Where the plans call for watertightness, field testing for compliance is required. Where plans call for positive joints, the pipe sections shall be joined to achieve Table A Dimensions on one side of the joint. Joints classified as standard shall have no less than 3½" joint overlap at any point on the periphery.
3. Factory applied insertion line limit shall be placed on spigot.
4. Liner insert to be used inside of existing pipe.

TABLE A

JOINT OVERLAP DIMENSIONS		
PIPE Dia (NOMINAL)	A	B
12"	5¾"	4¼"
15"	6¾"	5⅝"
18"	6¾"	5⅝"
21"	8½"	5⅝"
24"	8½"	6⅛"
30"	8½"	7⅛"
36"	8½"	8⅛"

STATE OF CALIFORNIA
DEPARTMENT OF TRANSPORTATION

CORRUGATED POLYVINYL CHLORIDE PIPE WITH SMOOTH INTERIOR STANDARD AND POSITIVE JOINTS

NO SCALE

NSP D97I DATED MARCH 7, 2008 SUPPLEMENTS THE STANDARD PLANS BOOK DATED MAY 2006.

NEW STANDARD PLAN NSP D97I

190A

2006 NEW STANDARD PLAN NSP D97I

2-13-08

DIST	COUNTY	ROUTE	POST MILES TOTAL PROJECT	SHEET NO.	TOTAL SHEETS
04	Son	116,12	26.7, 9.2	55	58

Robert B Schott
LICENSED LANDSCAPE ARCHITECT

August 15, 2008
PLANS Approval DATE

LICENSED LANDSCAPE ARCHITECT
Robert B. Schott 3895
Registration Date
11-04-08
Renewal Date
08-11-08
Date
STATE OF CALIFORNIA

The State of California or its officers or agents shall not be responsible for the accuracy or completeness of electronic copies of this plan sheet.

To accompany plans dated 2-22-10

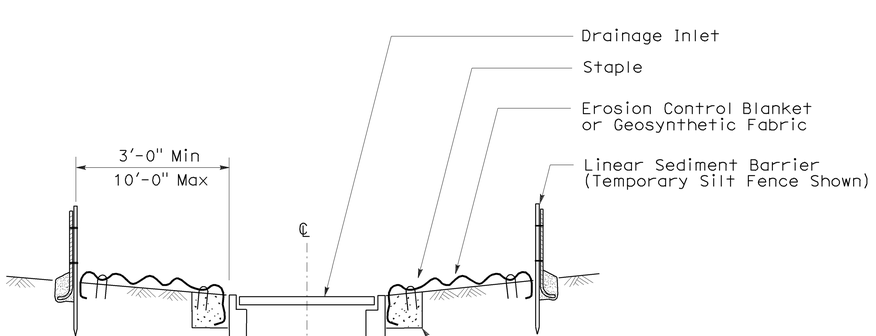

SECTION A-A

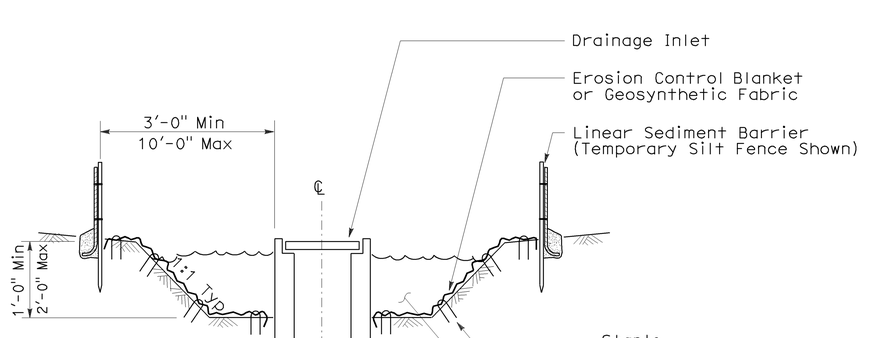

SECTION B-B

NOTES:

1. See Standard Plan T51 for Temporary Silt Fence.
2. Dimensions may vary to fit field conditions.

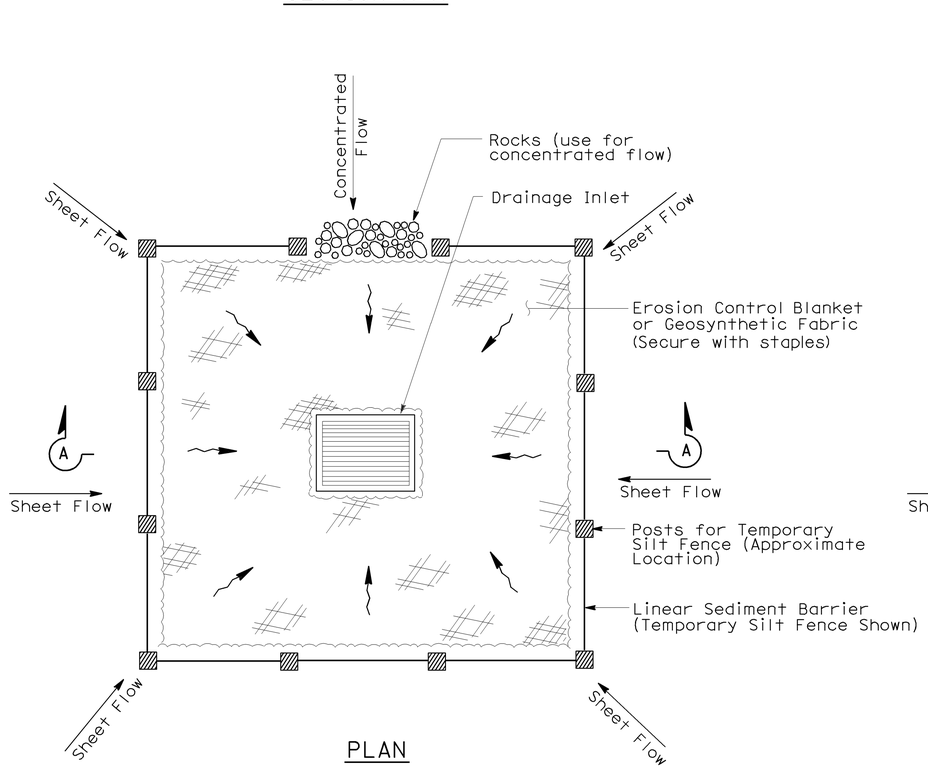

PLAN

TEMPORARY DRAINAGE
INLET PROTECTION (TYPE 1)

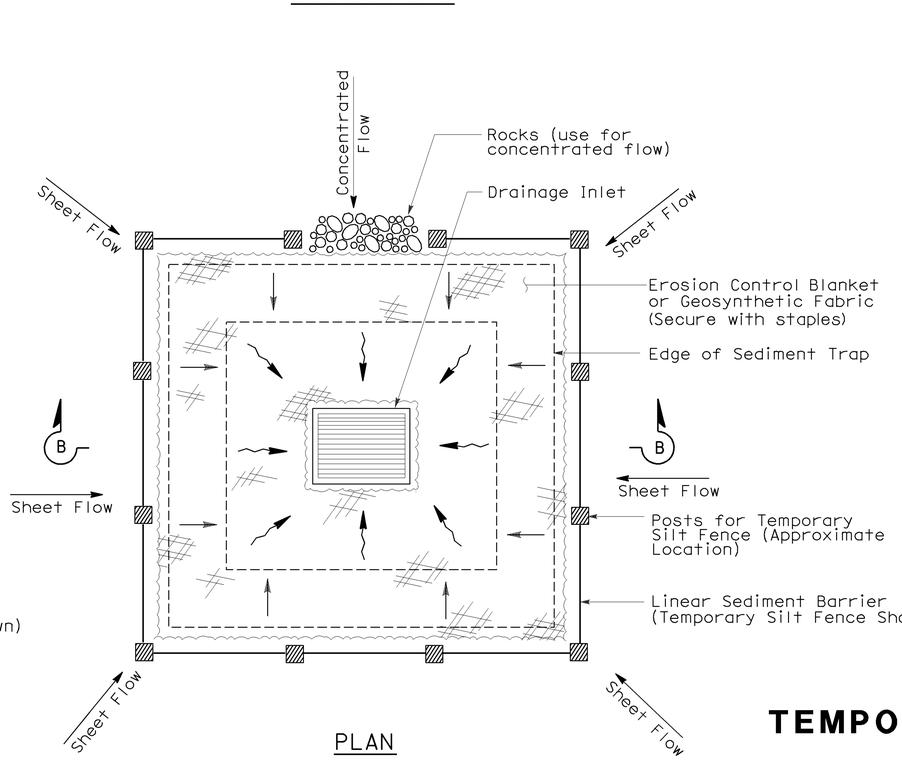

PLAN

TEMPORARY DRAINAGE
INLET PROTECTION (TYPE 2)
(EXCAVATED SEDIMENT TRAP)

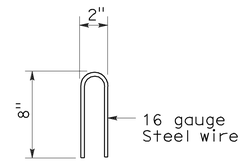

STAPLE DETAIL

STATE OF CALIFORNIA
DEPARTMENT OF TRANSPORTATION

TEMPORARY WATER POLLUTION CONTROL DETAILS (TEMPORARY DRAINAGE INLET PROTECTION)

NO SCALE

Nsp t61 dated august 15, 2008 supplements the standard plans book dated may 2006.

NEW STANDARD PLAN NSP T61

2006 NEW STANDARD PLAN NSP T61

7-11-08

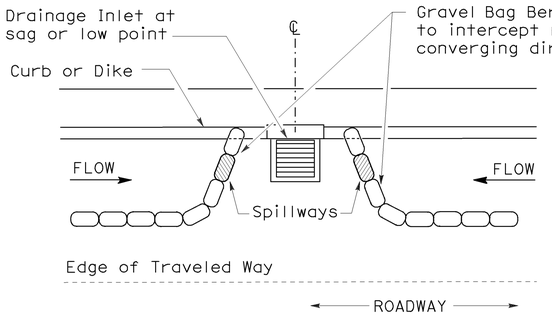

PLAN

CONFIGURATION FOR SAG POINT INLET (GRAVEL BAG BERM)

GRAVEL BAG BERM (TYPE 3A) SPACING TABLE

SLOPE OF ROADWAY (PERCENT)	1 to 3.9	4 to 5.9	6 to 7.9	8 to 10	10+
INTERVAL BETWEEN BERM	100′	75′	50′	25′	12′

For slope of less than 1%, install barriers only if erosion/sediment is prevalent

DIST	COUNTY	ROUTE	POST MILES TOTAL PROJECT	SHEET NO.	TOTAL SHEETS
04	Son	116,12	26.7, 9.2	56	58

Robert B Schott
LICENSED LANDSCAPE ARCHITECT

August 15, 2008
PLANS APPROVAL DATE

LICENSED LANDSCAPE ARCHITECT — Robert B. Schott 3895 — Signature — 11-04-08 Renewal Date — 08-11-08 Date — STATE OF CALIFORNIA

The State of California or its officers or agents shall not be responsible for the accuracy or completeness of electronic copies of this plan sheet.

To accompany plans dated 2-22-10

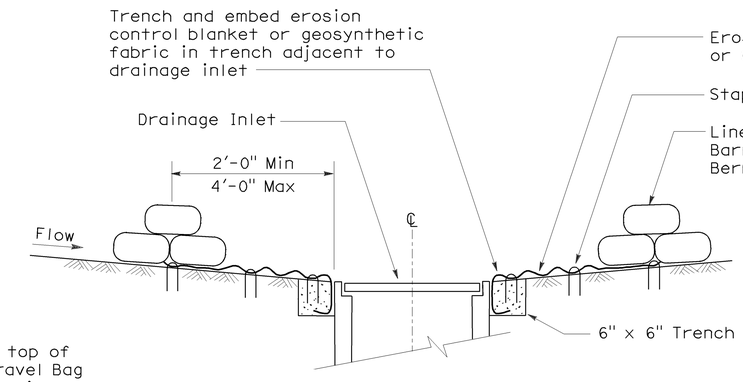

SECTION A-A

NOTES:

1. Place safety cones adjacent to drainage inlet protection.
2. Dimensions may vary to fit field conditions.
3. Install a minimum of 3 gravel bag berms upstream of each drainage inlet to be protected.
4. Position erosion control blanket or geosynthetic fabric at edge of concrete apron and secure in trench.
5. Erosion control blanket or geosynthetic fabric is not required if the area adjacent to the drainage inlet is vegetated or paved.

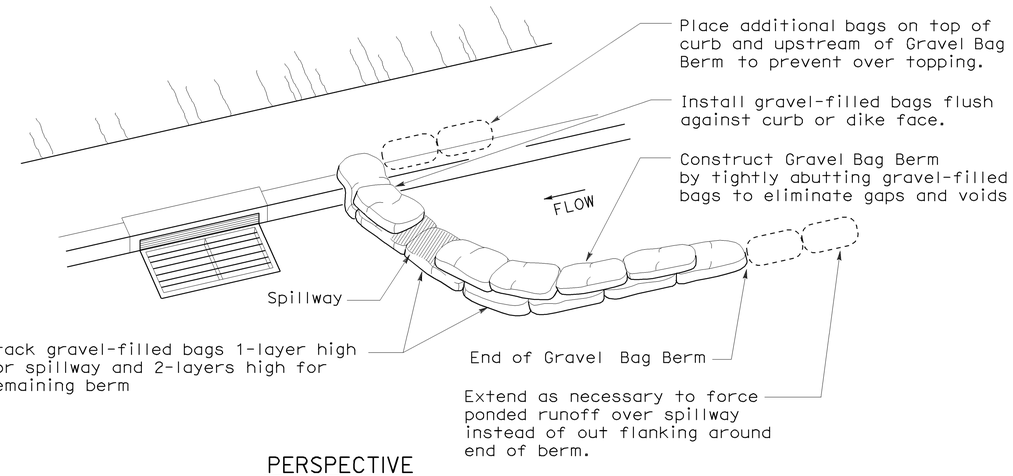

PERSPECTIVE

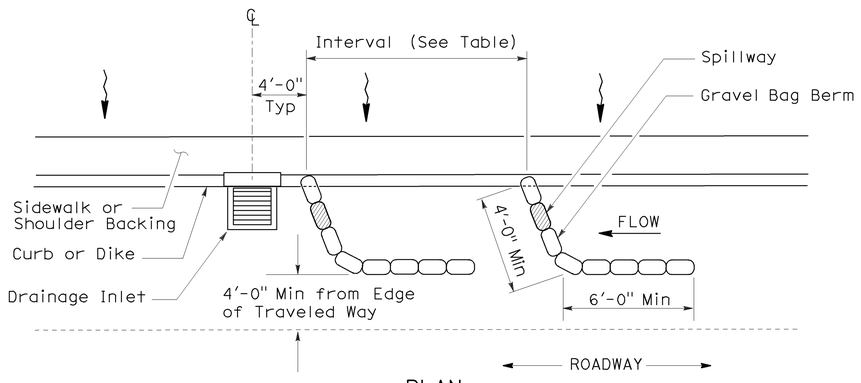

PLAN

TEMPORARY DRAINAGE INLET PROTECTION (TYPE 3A) (GRAVEL BAG BERM)

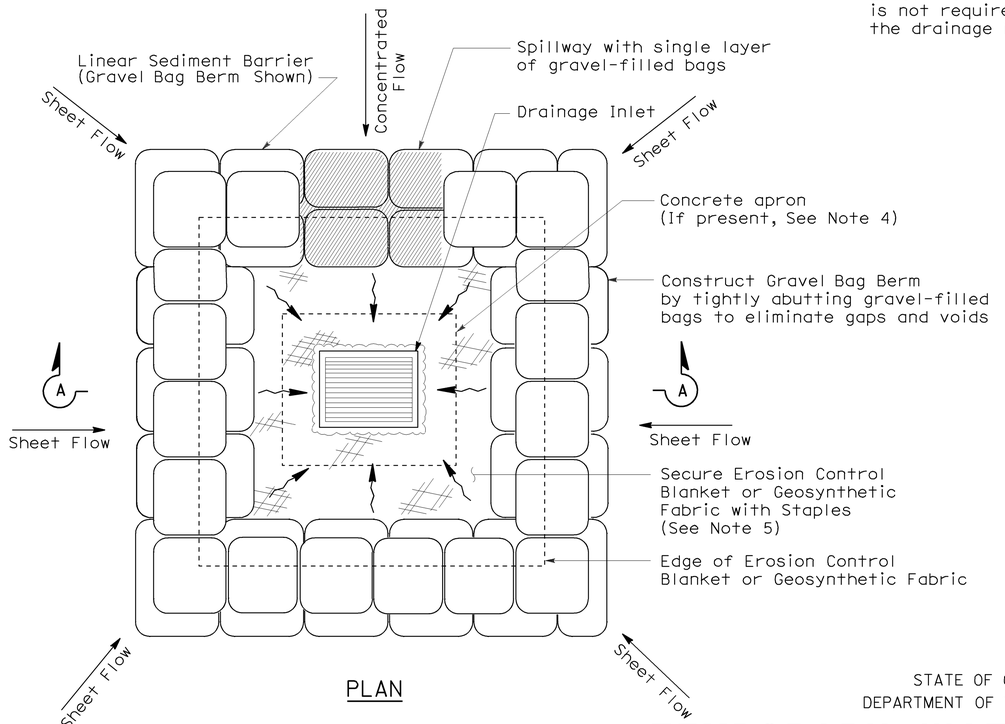

PLAN

TEMPORARY DRAINAGE INLET PROTECTION (TYPE 3B)

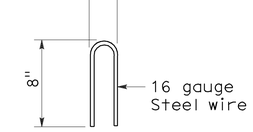

STAPLE DETAIL

STATE OF CALIFORNIA
DEPARTMENT OF TRANSPORTATION

TEMPORARY WATER POLLUTION CONTROL DETAILS (TEMPORARY DRAINAGE INLET PROTECTION)

NO SCALE

NSP T62 DATED AUGUST 15, 2008 SUPPLEMENTS THE STANDARD PLANS BOOK DATED MAY 2006.

NEW STANDARD PLAN NSP T62

2006 NEW STANDARD PLAN NSP T62

7-11-08

FLEXIBLE SEDIMENT BARRIER SPACING TABLE

SLOPE OF ROADWAY (PERCENT)	0 to 0.9	1 to 1.9	2 to 2.9	3 to 4	5+
INTERVAL BETWEEN BARRIERS	50′	35′	30′	25′	20′
ANGLE FROM FACE OF CURB	70°	70°	70°	45°	45°
SUGGESTED BARRIER LENGTH	6′	6′	6′	6′	6′

DIST	COUNTY	ROUTE	POST MILES TOTAL PROJECT	SHEET NO.	TOTAL SHEETS
04	Son	116,12	26.7, 9.2	57	58

Robert B Schott
LICENSED LANDSCAPE ARCHITECT

August 15, 2008
PLANS APPROVAL DATE

LICENSED LANDSCAPE ARCHITECT — Robert B. Schott — 3825 — Registration Date 11-04-08 — Renewal Date 08-11-08 — Date — STATE OF CALIFORNIA

The State of California or its officers or agents shall not be responsible for the accuracy or completeness of electronic copies of this plan sheet.

To accompany plans dated 2-22-10

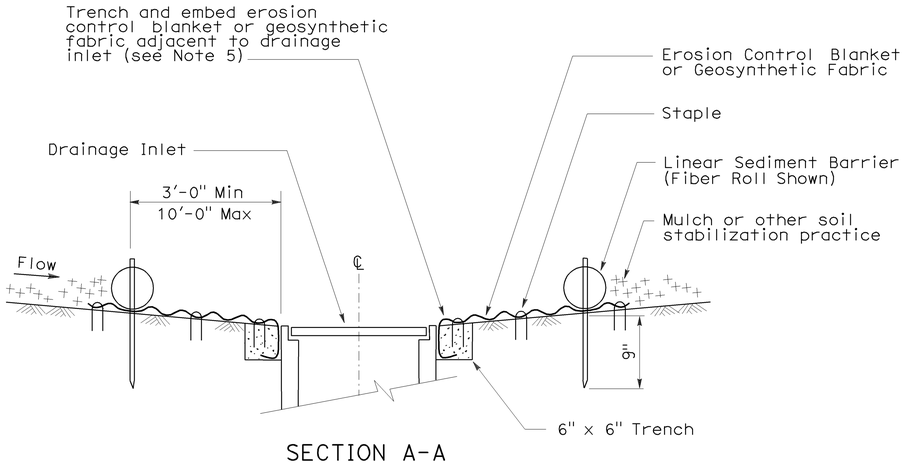

SECTION A-A

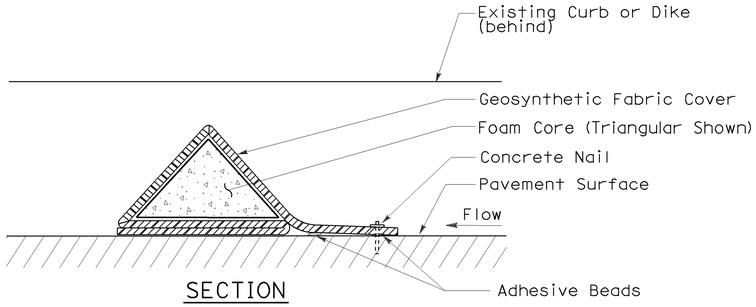

SECTION

FLEXIBLE SEDIMENT BARRIER DETAIL (FOAM BARRIER SHOWN)

NOTES:

1. See Standard Plan T51 for Temporary Silt Fence.
2. Dimensions may vary to fit field conditions.
3. Install a minimum of 3 flexible sediment barriers upstream of each drainage inlet to be protected.
4. Position erosion control blanket or geosynthetic fabric at edge of concrete apron and secure in trench.
5. Erosion control blanket or geosynthetic fabric is not required if the area adjacent to the drainage inlet is vegetated.

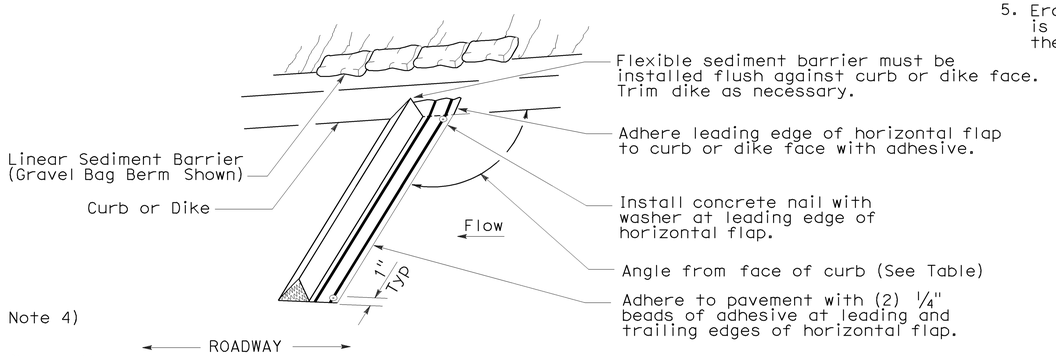

PERSPECTIVE

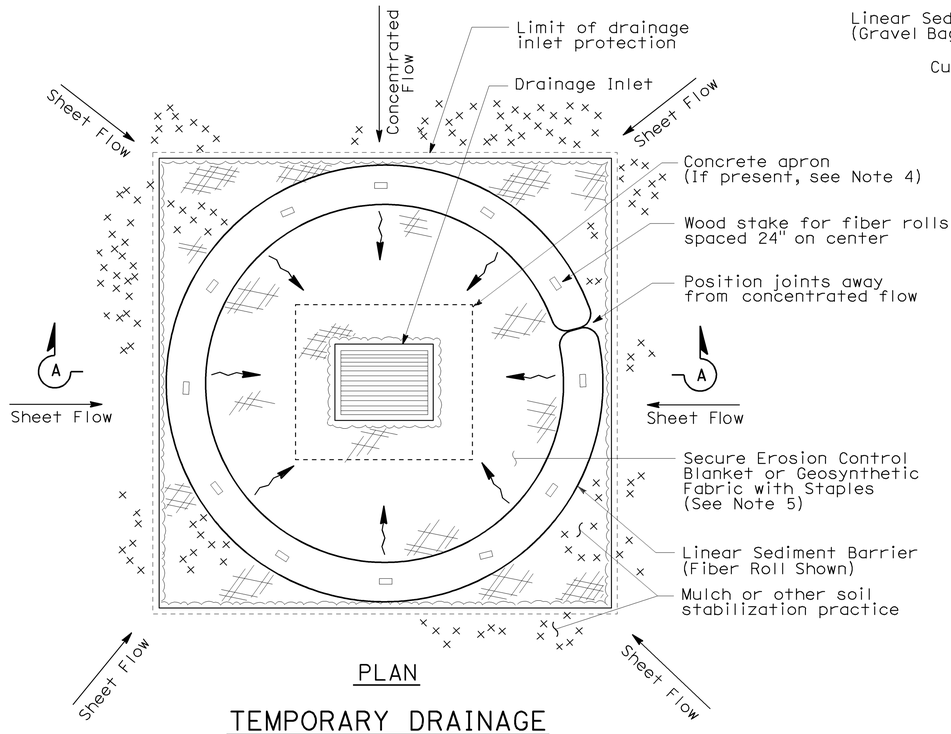

PLAN

TEMPORARY DRAINAGE INLET PROTECTION (TYPE 4A)

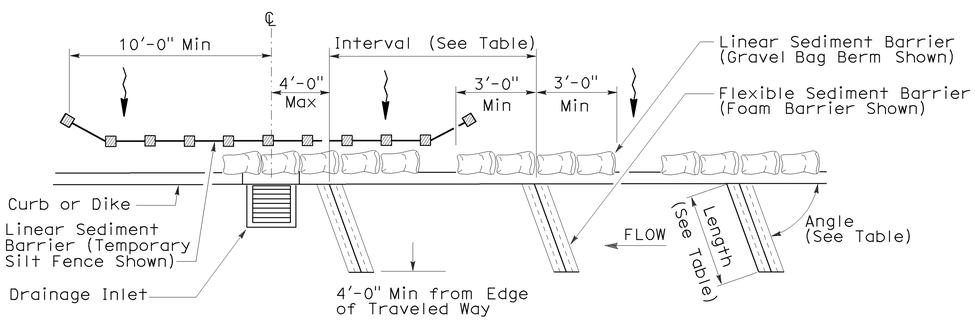

PLAN

TEMPORARY DRAINAGE INLET PROTECTION (TYPE 4B) FLEXIBLE SEDIMENT BARRIER

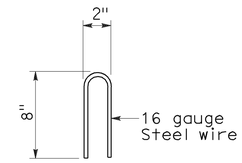

STAPLE DETAIL

STATE OF CALIFORNIA
DEPARTMENT OF TRANSPORTATION

TEMPORARY WATER POLLUTION CONTROL DETAILS (TEMPORARY DRAINAGE INLET PROTECTION)

NO SCALE

NSP T63 DATED AUGUST 15, 2008 SUPPLEMENTS THE STANDARD PLANS BOOK DATED MAY 2006.

NEW STANDARD PLAN NSP T63

2006 NEW STANDARD PLAN NSP T63

7-11-08

DIST	COUNTY	ROUTE	POST MILES TOTAL PROJECT	SHEET NO.	TOTAL SHEETS
04	Son	116,12	26.7, 9.2	58	58

Robert B Schott
LICENSED LANDSCAPE ARCHITECT

August 15, 2008
PLANS APPROVAL DATE

LICENSED LANDSCAPE ARCHITECT — Robert B. Schott 3895 — Registration Date 11-04-08 — Renewal Date 08-11-08 — Date — STATE OF CALIFORNIA

The State of California or its officers or agents shall not be responsible for the accuracy or completeness of electronic copies of this plan sheet.

To accompany plans dated 2-22-10

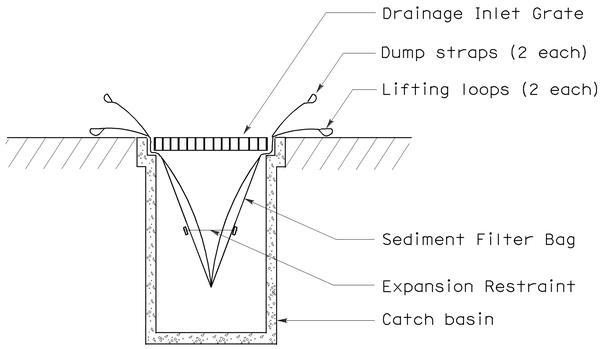

SECTION B-B

SEDIMENT FILTER BAG DETAIL

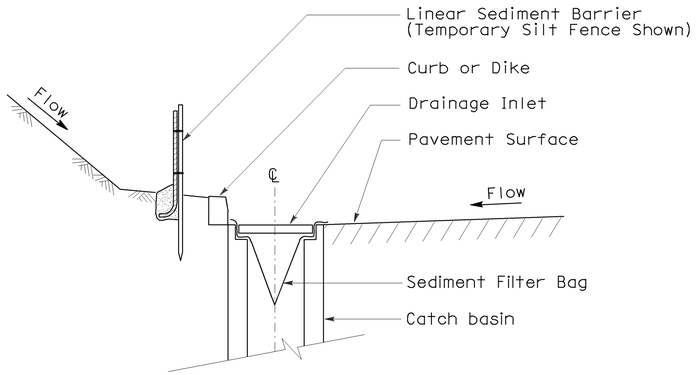

SECTION A-A

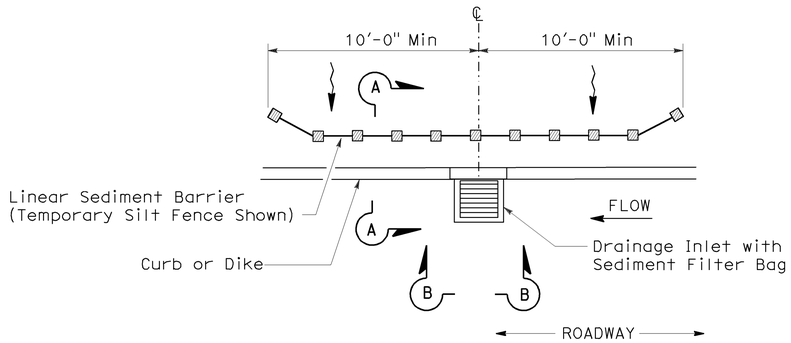

PLAN

TEMPORARY DRAINAGE INLET PROTECTION (TYPE 5) (SEDIMENT FILTER BAG)

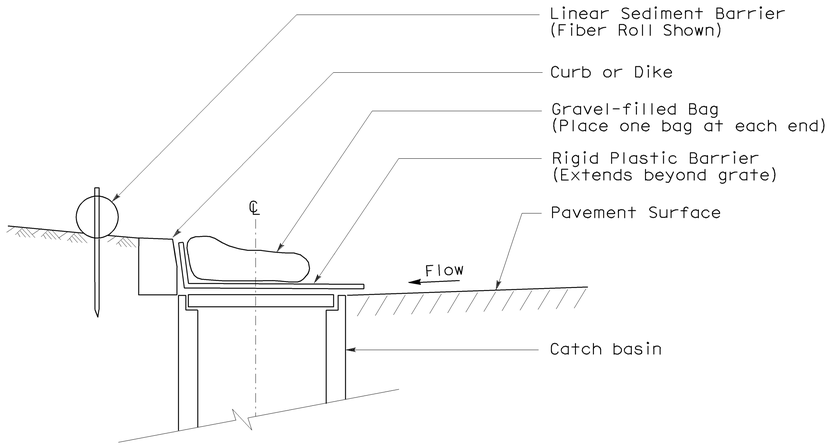

SECTION

TEMPORARY DRAINAGE INLET PROTECTION (TYPE 6A) (CATCH BASIN WITH GRATE)

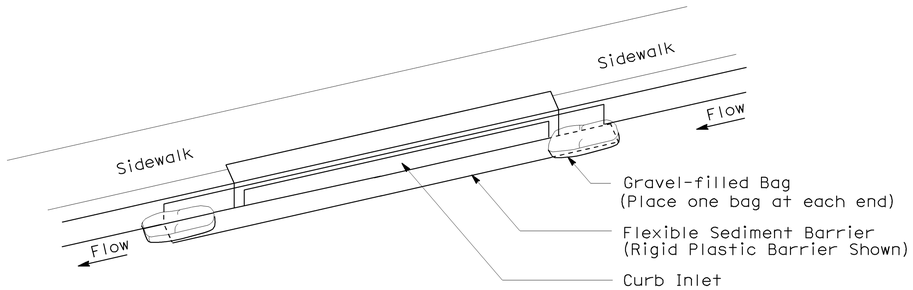

PERSPECTIVE

TEMPORARY DRAINAGE INLET PROTECTION (TYPE 6B) (CURB INLET WITHOUT GRATE)

NOTES:

1. See Standard Plan T51 for Temporary Silt Fence.
2. Dimensions may vary to fit field conditions.

STATE OF CALIFORNIA
DEPARTMENT OF TRANSPORTATION

TEMPORARY WATER POLLUTION CONTROL DETAILS (TEMPORARY DRAINAGE INLET PROTECTION)

NO SCALE

NSP T64 DATED AUGUST 15, 2008 SUPPLEMENTS
THE STANDARD PLANS BOOK DATED MAY 2006.

NEW STANDARD PLAN NSP T64

2006 NEW STANDARD PLAN NSP T64

7-11-08