Dist	COUNTY	ROUTE	POST MILES TOTAL PROJECT	SHEET No.	TOTAL SHEETS
04	CC	680	22.7/24.8	23	186

REGISTERED CIVIL ENGINEER 11-29-12 DATE

5-20-13
PLANS APPROVAL DATE

REGISTERED PROFESSIONAL ENGINEER Manuel M. Canilao Jr. No. 58845 Exp. 6-30-15 CIVIL STATE OF CALIFORNIA

THE STATE OF CALIFORNIA OR ITS OFFICERS OR AGENTS SHALL NOT BE RESPONSIBLE FOR THE ACCURACY OR COMPLETENESS OF SCANNED COPIES OF THIS PLAN SHEET.

NOTES:

1. FOR ACCURATE RIGHT OF WAY DATA, CONTACT RIGHT OF WAY ENGINEERING AT THE DISTRICT OFFICE.
2. SEE SHEET SC-2 FOR TYPICAL PLACEMENT LOCATION OF Temp RAILING (TYPE K).

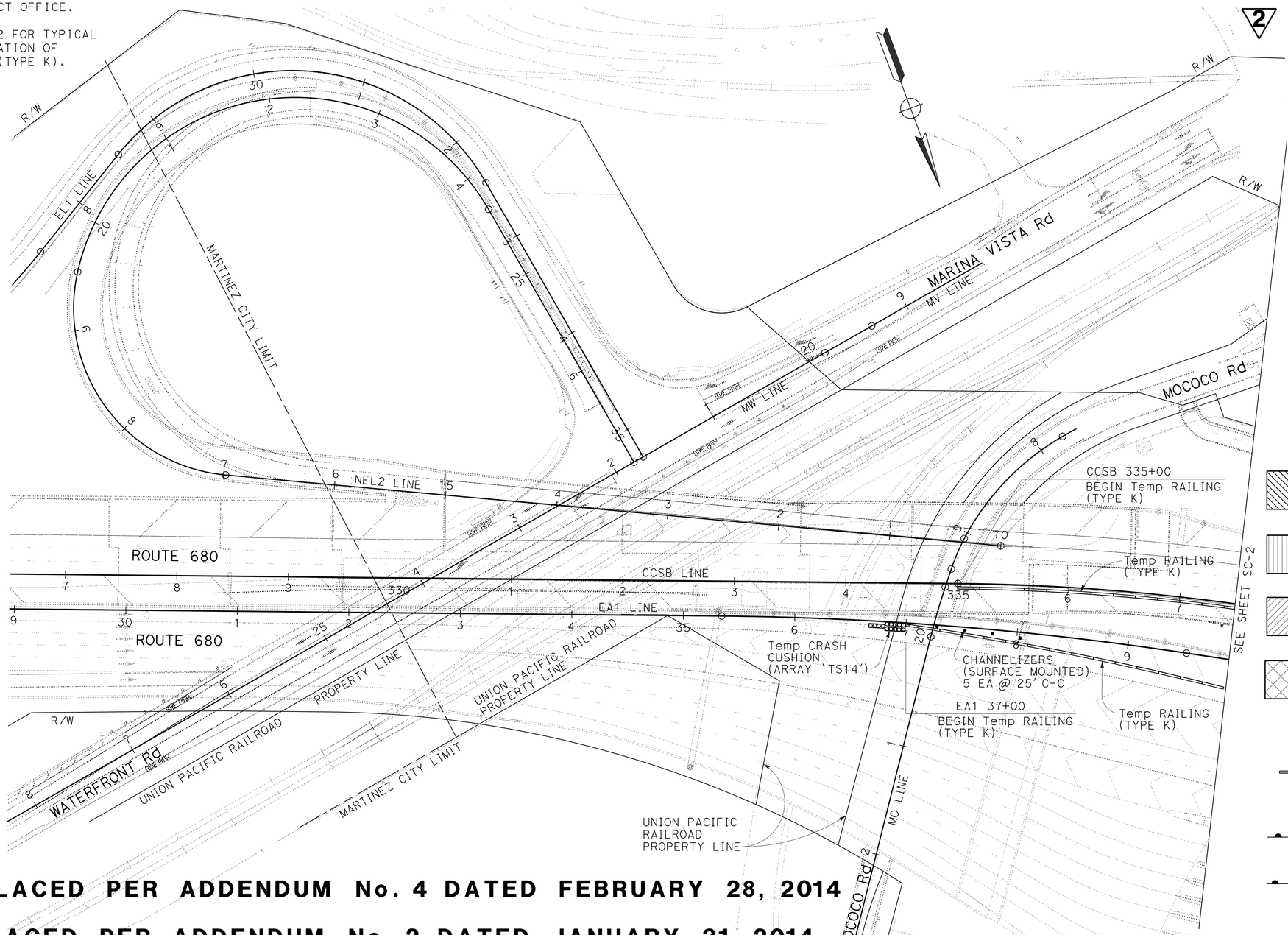

STAGE 1 CONSTRUCTION:

1. PLACE Temp CRASH CUSHION (ARRAY 'TS14') AND Temp RAILINGS (TYPE K) AS SHOWN.
2. CONSTRUCT STAGES AS SHOWN ON SHEETS SC-2, SC-3 AND SC-4.
3. EMERGENCY LANE CONSTRUCTION.
4. Conc BARRIER, MGS AND VEGETATION CONTROL CONSTRUCTION.
5. Ret WALL EXTENSION.
6. DITCH CONSTRUCTION.

LEGEND:

- Temp CONSTRUCTION ACCESS THIS STAGE
- Temp CONSTRUCTION ACCESS THIS STAGE OVER Exist CHANNEL TO REMAIN CLEAR AND ABOVE GROUND PIPELINE
- PERMANENT CONSTRUCTION THIS STAGE
- REMOVAL THIS STAGE
- DIRECTION OF TRAVEL
- Temp RAILING (TYPE K)
- Temp CRASH CUSHION
- TRSF — Temp REINFORCED SILT FENCE SEE Std PLAN T60 (TYPE 1) FOR DETAILS
- TFESA — Temp FENCE (TYPE ESA)
- No. — PAVEMENT DELINEATION DETAIL
- Temp GRAVEL-FILLED BAG COFFERDAM

4 REPLACED PER ADDENDUM No. 4 DATED FEBRUARY 28, 2014

2 REPLACED PER ADDENDUM No. 2 DATED JANUARY 31, 2014

STAGE CONSTRUCTION AND TRAFFIC HANDLING PLAN

STAGE 1

SCALE: 1" = 50'

APPROVED FOR STAGE CONSTRUCTION AND TRAFFIC HANDLING WORK ONLY

SC-1

REVISED BY	MC
DATE REVISED	10/5/12
CALCULATED-DESIGNED BY	MANUEL CANILAO JR.
CHECKED BY	JASWINDER MANN
FUNCTIONAL SUPERVISOR	JASWINDER MANN

STATE OF CALIFORNIA - DEPARTMENT OF TRANSPORTATION
Caltrans
DESIGN

LAST REVISION 03-27-13 | DATE PLOTTED => 27-FEB-2014 | TIME PLOTTED => 13:27

Dist	COUNTY	ROUTE	POST MILES TOTAL PROJECT	SHEET No.	TOTAL SHEETS
04	CC	680	22.7/24.8	27	186

REGISTERED CIVIL ENGINEER 11-29-12 DATE

5-20-13
PLANS APPROVAL DATE

REGISTERED PROFESSIONAL ENGINEER Manuel M. Canilao Jr. No. 58845 Exp. 6-30-15 CIVIL STATE OF CALIFORNIA

THE STATE OF CALIFORNIA OR ITS OFFICERS OR AGENTS SHALL NOT BE RESPONSIBLE FOR THE ACCURACY OR COMPLETENESS OF SCANNED COPIES OF THIS PLAN SHEET.

NOTE:

FOR ACCURATE RIGHT OF WAY DATA, CONTACT RIGHT OF WAY ENGINEERING AT THE DISTRICT OFFICE.

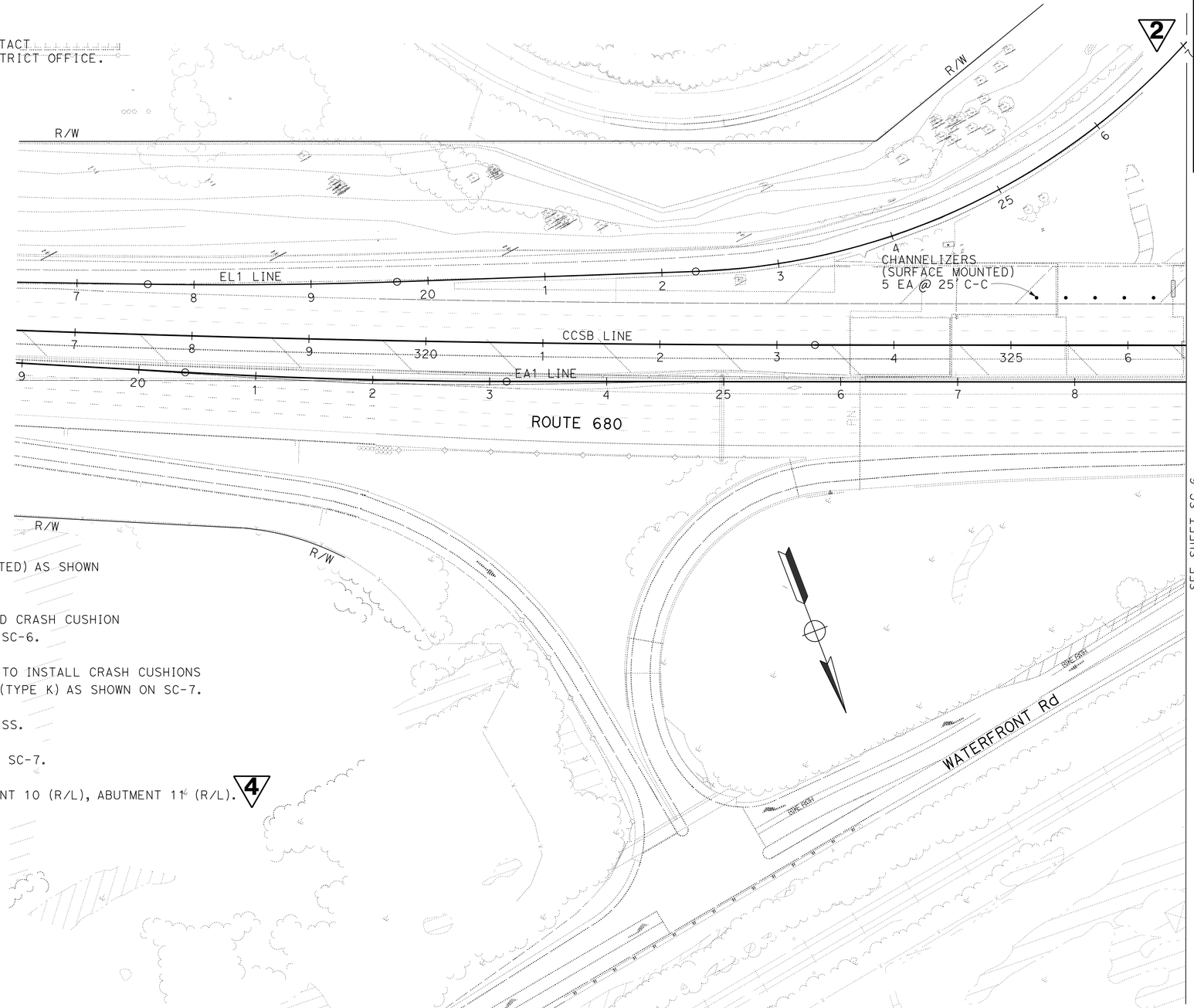

STAGE 2 CONSTRUCTION:

1. PLACE CHANNELIZERS (SURFACE MOUNTED) AS SHOWN STARTING FROM Sta CCSB 325+25.
2. INSTALL Temp RAILINGS (TYPE K) AND CRASH CUSHION (ARRAY 'TU21') AS SHOWN ON SHEET SC-6.
3. REMOVE GUARDRAIL (SEE SHEET L-3) TO INSTALL CRASH CUSHIONS (ARRAY 'TS11') AND Temp RAILINGS (TYPE K) AS SHOWN ON SC-7.
4. CONSTRUCT Temp CONSTRUCTION ACCESS.
5. CONSTRUCT THIS STAGE AS SHOWN ON SC-7.
6. RETROFIT WORK ON BENT 7 (R/L), BENT 10 (R/L), ABUTMENT 11 (R/L). 4

4 **REPLACED PER ADDENDUM No. 4 DATED FEBRUARY 28, 2014**

2 **REPLACED PER ADDENDUM No. 2 DATED JANUARY 31, 2014**

APPROVED FOR STAGE CONSTRUCTION AND TRAFFIC HANDLING WORK ONLY

FOR NOTES, ABBREVIATIONS AND LEGEND, SEE SHEET SC-1

STAGE CONSTRUCTION AND TRAFFIC HANDLING PLAN

STAGE 2

SCALE: 1" = 50'

SC-5

REVISED BY	DATE REVISED
MC	3/12/13

MANUEL CANILAO JR. — JASWINDER MANN

CALCULATED-DESIGNED BY — CHECKED BY

FUNCTIONAL SUPERVISOR — JASWINDER MANN

STATE OF CALIFORNIA - DEPARTMENT OF TRANSPORTATION

Caltrans® DESIGN

LAST REVISION 03-22-13 | DATE PLOTTED => 27-FEB-2014 | TIME PLOTTED => 13:27

Dist	COUNTY	ROUTE	POST MILES TOTAL PROJECT	SHEET No.	TOTAL SHEETS
04	CC	680	22.7/24.8	31	186

REGISTERED CIVIL ENGINEER 11-29-12 DATE

5-20-13
PLANS APPROVAL DATE

REGISTERED PROFESSIONAL ENGINEER Manuel M. Canilao Jr. No. 58845 Exp. 6-30-15 CIVIL STATE OF CALIFORNIA

THE STATE OF CALIFORNIA OR ITS OFFICERS OR AGENTS SHALL NOT BE RESPONSIBLE FOR THE ACCURACY OR COMPLETENESS OF SCANNED COPIES OF THIS PLAN SHEET.

NOTE:

FOR ACCURATE RIGHT OF WAY DATA, CONTACT RIGHT OF WAY ENGINEERING AT THE DISTRICT OFFICE.

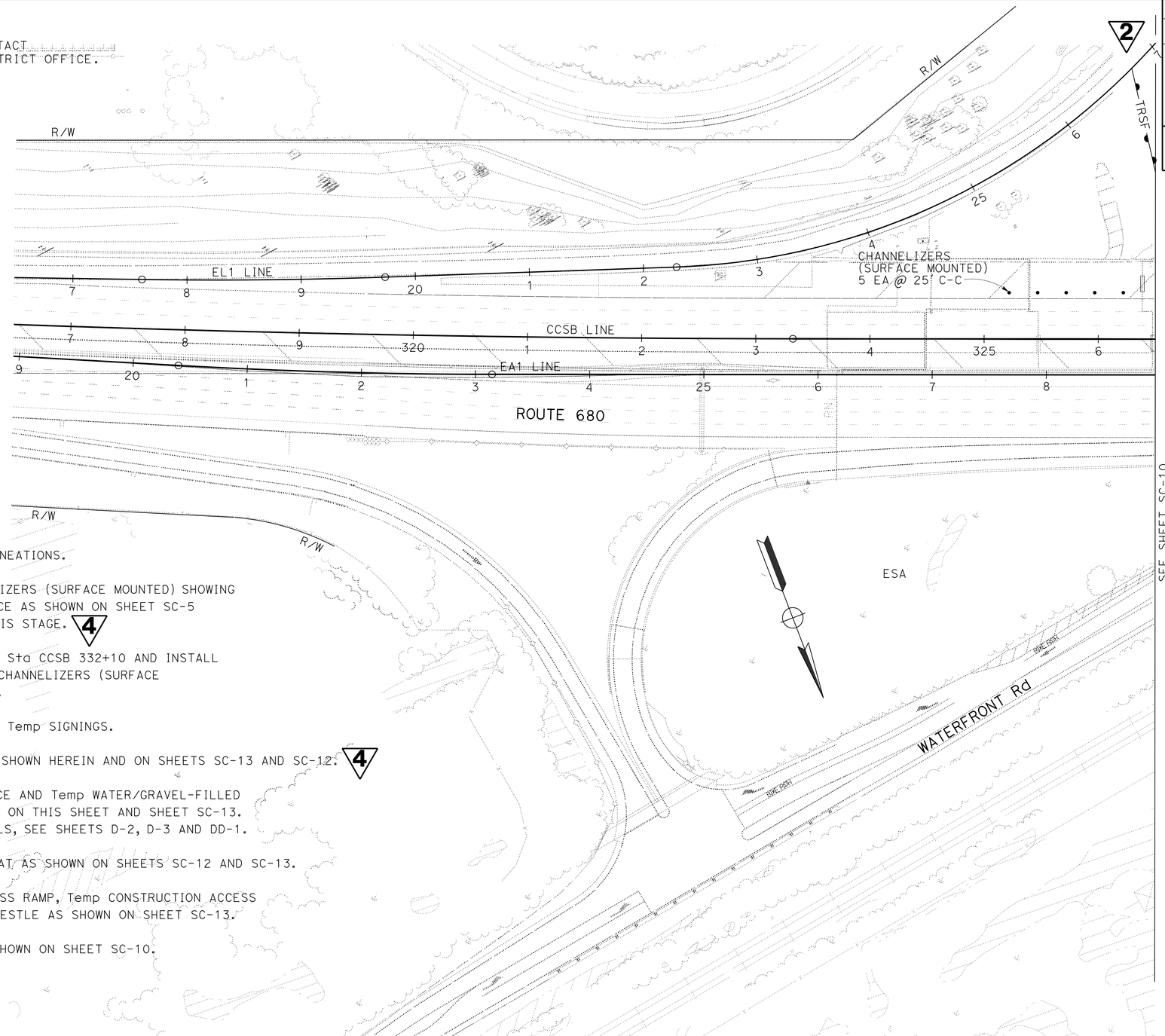

STAGE 4 CONSTRUCTION:

1. REMOVE ALL Exist CONFLICTING DELINEATIONS.
2. Temp RAILING (TYPE K) AND CHANNELIZERS (SURFACE MOUNTED) SHOWING ON THIS SHEET ARE ALREADY IN PLACE AS SHOWN ON SHEET SC-5 (STAGE 2) AND ARE TO REMAIN ON THIS STAGE. 4
3. EXTEND Temp RAILING (TYPE K) FROM Sta CCSB 332+10 AND INSTALL CRASH CUSHION (ARRAY 'TS14') AND CHANNELIZERS (SURFACE MOUNTED) AS SHOWN ON SHEET SC-10.
4. PLACE Temp PAVEMENT MARKINGS AND Temp SIGNINGS.
5. INSTALL Temp FENCE (TYPE ESA) AS SHOWN HEREIN AND ON SHEETS SC-13 AND SC-12. 4
6. INSTALL Temp REINFORCED SILT FENCE AND Temp WATER/GRAVEL-FILLED BAG COFFERDAM ENCLOSURE AS SHOWN ON THIS SHEET AND SHEET SC-13. FOR PLACEMENT LOCATION AND DETAILS, SEE SHEETS D-2, D-3 AND DD-1.
7. PLACE Temp TIMBER CONSTRUCTION MAT AS SHOWN ON SHEETS SC-12 AND SC-13.
8. CONSTRUCT Temp CONSTRUCTION ACCESS RAMP, Temp CONSTRUCTION ACCESS AT LOCATIONS 2 AND 3 AND Temp TRESTLE AS SHOWN ON SHEET SC-13.
9. REMOVE/CONSTRUCT THE STAGES AS SHOWN ON SHEET SC-10.
10. Exist BRIDGE DEMOLITION.
11. NEW BRIDGE CONSTRUCTION.
12. BRIDGE APPROACH CONSTRUCTION.
13. RETROFIT WORK ON ALL BENTS EXCEPT BENTS 7 AND 10, AND ABUTMENT 11. 4

4 REPLACED PER ADDENDUM No. 4 DATED FEBRUARY 28, 2014

2 REPLACED PER ADDENDUM No. 2 DATED JANUARY 31, 2014

APPROVED FOR STAGE CONSTRUCTION AND TRAFFIC HANDLING WORK ONLY

FOR NOTES, ABBREVIATIONS AND LEGEND, SEE SHEET SC-1

STAGE CONSTRUCTION AND TRAFFIC HANDLING PLAN
STAGE 4

SCALE: 1" = 50'

SC-9

STATE OF CALIFORNIA - DEPARTMENT OF TRANSPORTATION
Caltrans DESIGN

FUNCTIONAL SUPERVISOR: JASWINDER MANN
CALCULATED-DESIGNED BY: MANUEL CANILAO JR.
CHECKED BY: JASWINDER MANN
REVISED BY: MC
DATE REVISED: 3/12/13

LAST REVISION 03-22-13
DATE PLOTTED => 27-FEB-2014
TIME PLOTTED => 13:27

Dist	COUNTY	ROUTE	POST MILES TOTAL PROJECT	SHEET No.	TOTAL SHEETS
04	CC	680	22.7/24.8	32B	186

REGISTERED CIVIL ENGINEER 1-16-14 DATE

5-20-13
PLANS APPROVAL DATE

REGISTERED PROFESSIONAL ENGINEER Manuel M. Canilao Jr. No. 58845 Exp. 6-30-15 CIVIL STATE OF CALIFORNIA

THE STATE OF CALIFORNIA OR ITS OFFICERS OR AGENTS SHALL NOT BE RESPONSIBLE FOR THE ACCURACY OR COMPLETENESS OF SCANNED COPIES OF THIS PLAN SHEET.

NOTE:

FOR ACCURATE RIGHT OF WAY DATA, CONTACT RIGHT OF WAY ENGINEERING AT THE DISTRICT OFFICE.

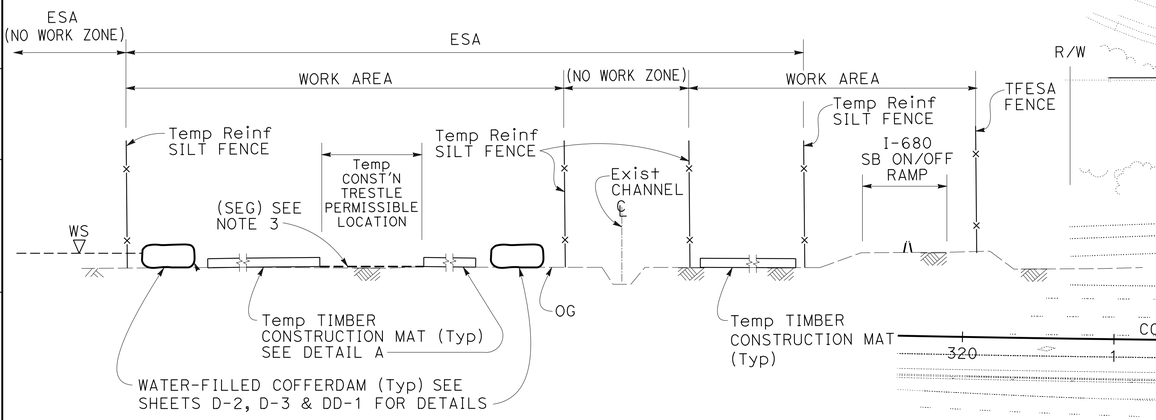

SECTION B-B
NO SCALE

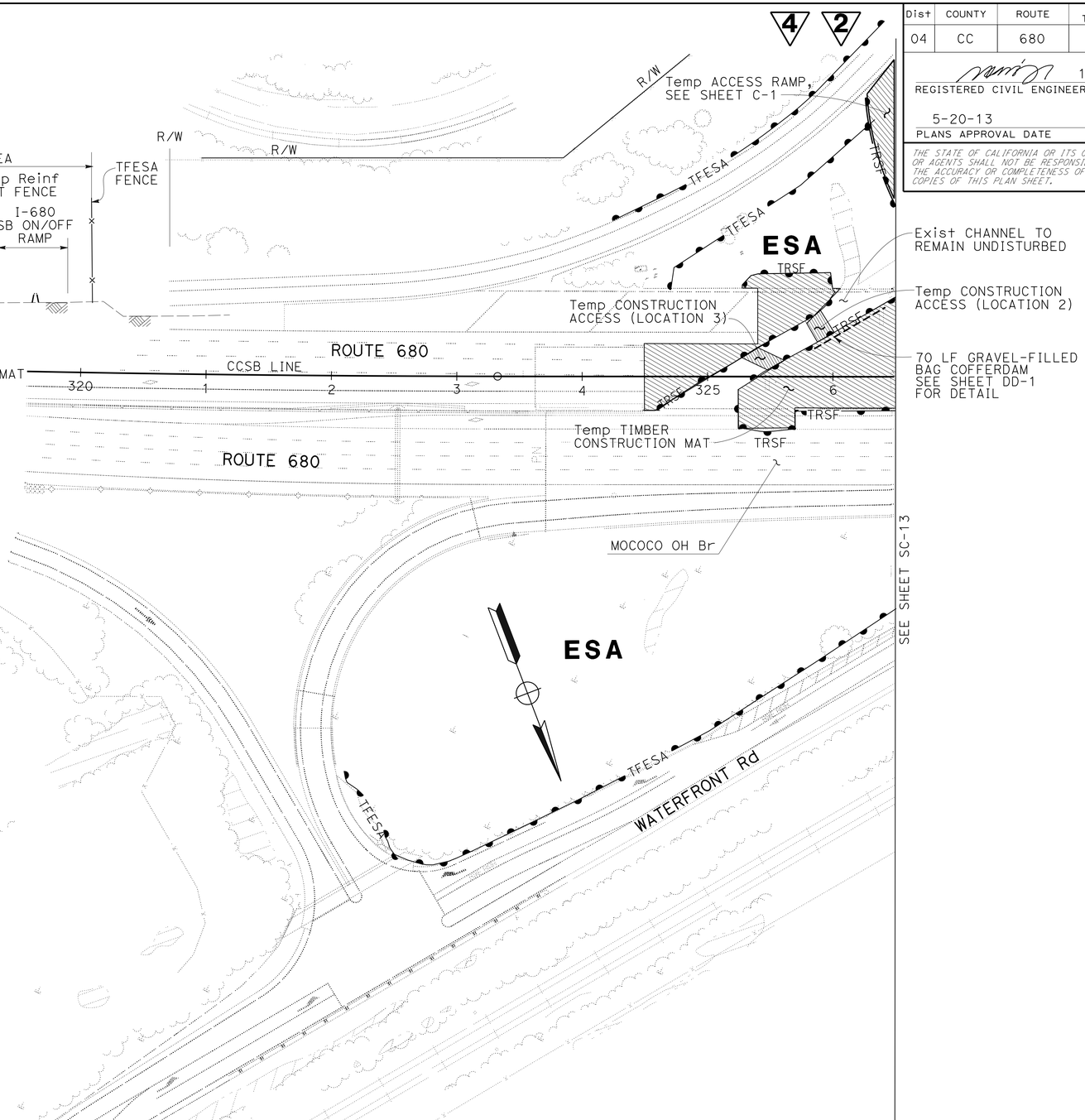

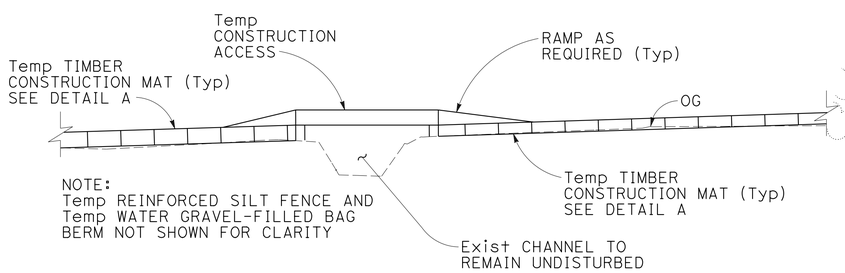

NOTE:
Temp REINFORCED SILT FENCE AND Temp WATER GRAVEL-FILLED BAG BERM NOT SHOWN FOR CLARITY

TYPICAL CROSS SECTION
Temp CONSTRUCTION ACCESS (LOCATION 2 & 3)
NO SCALE

NOTES:

1. INSTALL Temp WATER/GRAVEL-FILLED BAG COFFERDAM AND Temp REINFORCED SILT FENCE PRIOR TO ANY CONSTRUCTION ACTIVITY.
2. FOR WATER/GRAVEL FILLED BAG COFFERDAM DETAILS, SEE SHEET DD-1.
3. PLACE SUBGRADE ENHANCEMENT GEOTEXTILE (SEG) ON GROUND WITHIN THE PERMISSIBLE LIMITS OF Temp CONSTRUCTION TRESTLE.

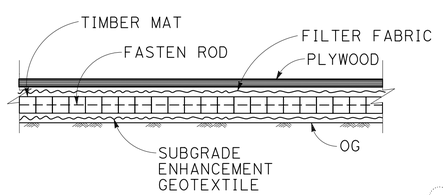

DETAIL A
NO SCALE

4 **REPLACED PER ADDENDUM No. 4 DATED FEBRUARY 28, 2014**

2 **ADDED PER ADDENDUM No. 2 DATED JANUARY 31, 2014**

APPROVED FOR STAGE CONSTRUCTION AND TRAFFIC HANDLING WORK ONLY

STAGE CONSTRUCTION AND TRAFFIC HANDLING PLAN
STAGE 4
SCALE: 1" = 50'

FOR NOTES, ABBREVIATIONS AND LEGEND, SEE SHEET SC-1

SC-12

MC	3/12/13	REVISED BY / DATE REVISED
MANUEL CANILAO JR.	JASWINDER MANN	
CALCULATED-DESIGNED BY	CHECKED BY	
FUNCTIONAL SUPERVISOR	JASWINDER MANN	

STATE OF CALIFORNIA - DEPARTMENT OF TRANSPORTATION
Caltrans
DESIGN

LAST REVISION 03-29-13 | DATE PLOTTED => 27-FEB-2014 | TIME PLOTTED => 13:27

Dist	COUNTY	ROUTE	POST MILES TOTAL PROJECT	SHEET No.	TOTAL SHEETS
04	CC	680	22.7/24.8	32C	186

REGISTERED CIVIL ENGINEER 1-16-14 DATE

5-20-13
PLANS APPROVAL DATE

REGISTERED PROFESSIONAL ENGINEER Manuel M. Canilao Jr. No. 58845 Exp. 6-30-15 CIVIL STATE OF CALIFORNIA

THE STATE OF CALIFORNIA OR ITS OFFICERS OR AGENTS SHALL NOT BE RESPONSIBLE FOR THE ACCURACY OR COMPLETENESS OF SCANNED COPIES OF THIS PLAN SHEET.

NOTE:

FOR ACCURATE RIGHT OF WAY DATA, CONTACT RIGHT OF WAY ENGINEERING AT THE DISTRICT OFFICE.

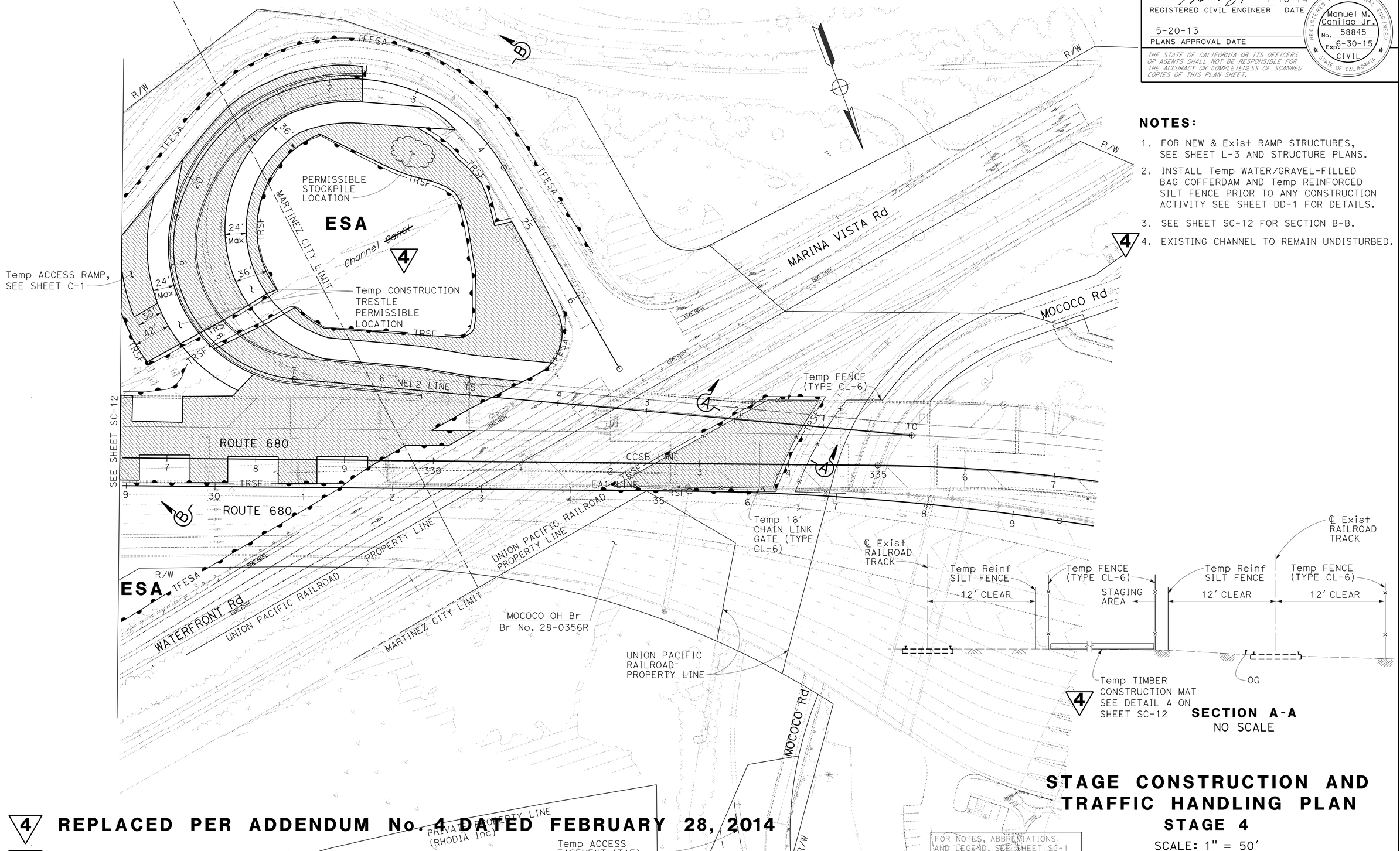

NOTES:

1. FOR NEW & Exist RAMP STRUCTURES, SEE SHEET L-3 AND STRUCTURE PLANS.
2. INSTALL Temp WATER/GRAVEL-FILLED BAG COFFERDAM AND Temp REINFORCED SILT FENCE PRIOR TO ANY CONSTRUCTION ACTIVITY SEE SHEET DD-1 FOR DETAILS.
3. SEE SHEET SC-12 FOR SECTION B-B.
4. EXISTING CHANNEL TO REMAIN UNDISTURBED.

STAGE CONSTRUCTION AND TRAFFIC HANDLING PLAN

STAGE 4

SCALE: 1" = 50'

FOR NOTES, ABBREVIATIONS AND LEGEND, SEE SHEET SC-1

4 REPLACED PER ADDENDUM No. 4 DATED FEBRUARY 28, 2014

2 ADDED PER ADDENDUM No. 2 DATED JANUARY 31, 2014

APPROVED FOR STAGE CONSTRUCTION AND TRAFFIC HANDLING WORK ONLY

SC-13

STATE OF CALIFORNIA - DEPARTMENT OF TRANSPORTATION
Caltrans DESIGN

FUNCTIONAL SUPERVISOR: JASWINDER MANN
CALCULATED-DESIGNED BY: MANUEL CANILAO JR.
CHECKED BY: JASWINDER MANN
REVISED BY: MC
DATE REVISED: 10/15/12

LAST REVISION 04-23-13
DATE PLOTTED => 27-FEB-2014
TIME PLOTTED => 13:27

Dist	COUNTY	ROUTE	POST MILES TOTAL PROJECT	SHEET No.	TOTAL SHEETS
04	CC	680	22.7/24.8	33	186

REGISTERED CIVIL ENGINEER 11-29-12 DATE

5-20-13
PLANS APPROVAL DATE

REGISTERED PROFESSIONAL ENGINEER Manuel M. Canilao Jr. No. 58845 Exp. 6-30-15 CIVIL STATE OF CALIFORNIA

THE STATE OF CALIFORNIA OR ITS OFFICERS OR AGENTS SHALL NOT BE RESPONSIBLE FOR THE ACCURACY OR COMPLETENESS OF SCANNED COPIES OF THIS PLAN SHEET.

2

TRAFFIC STRIPES, PAVEMENT MARKINGS AND PAVEMENT MARKERS

SHEET No.	STATION	LOCATION ARTHUR ROAD	DETAIL No. OR PAVEMENT MARKING	PAVEMENT MARKER RETROREFLECTIVE TYPE D	THERMOPLASTIC TRAFFIC STRIPE 4" YELLOW	THERMOPLASTIC TRAFFIC STRIPE 4" WHITE	THERMOPLASTIC PAVEMENT MARKING
				EA	LF		SQFT
SC-1	AR 9+32 TO 11+00	AR LINE	22	16	336		
	AR 11+00 TO 11+30	OFF-RAMP	12" WHITE LINE				65
	AR 11+00 TO 11+30	OFF-RAMP	TYPE III (B) ARROW				73
	AR 11+00 TO 11+30	OFF-RAMP	STOP				44
	AR 11+30 TO 13+77	AR LINE	22	23	494		
	AR 13+00 TO 14+91.5	AR LINE	27B			192	
	AR 14+18 TO 16+18	AR LINE	22	19	400		
SUBTOTAL				58	1230	192	182
				58 **	1422**		182**

** SEE SHEET PDQ-2 FOR TOTAL QUANTITIES.

REMOVE TRAFFIC STRIPES, PAVEMENT MARKINGS AND PAVEMENT MARKERS

SHEET No.	STATION	LOCATION ARTHUR ROAD	DETAIL No. OR PAVEMENT MARKING	REMOVE PAVEMENT MARKER RETROREFLECTIVE TYPE D	REMOVE THERMOPLASTIC TRAFFIC STRIPE 4" YELLOW (HAZARDOUS WASTE)	REMOVE THERMOPLASTIC TRAFFIC STRIPE 4" WHITE	REMOVE THERMOPLASTIC PAVEMENT MARKING
				EA	LF		SQFT
SC-1	AR 9+32 TO 11+00	AR LINE	22	16	336		
	AR 11+00 TO 11+30	OFF-RAMP	12" WHITE LINE				65
	AR 11+00 TO 11+30	OFF-RAMP	TYPE III (B) ARROW				73
	AR 11+00 TO 11+30	OFF-RAMP	STOP				44
	AR 11+30 TO 13+77	AR LINE	22	23	494		
	AR 13+00 TO 14+91.5	AR LINE	27B			192	
	AR 14+18 TO 16+18	AR LINE	22	19	400		
TOTAL				58**	1230**	192**	182**

** SEE SHEET PDQ-2 FOR TOTAL QUANTITIES.

~~TEMPORARY TIMBER CONSTRUCTION MAT~~ 4

~~SHEET No.~~	~~QUANTITY SQFT~~
~~SC-12 & SC-13~~	~~110000~~
~~TOTAL~~	~~110000~~

CHANNELIZER (SURFACE MOUNTED)

SHEET No.	STATION	LOCATION	EA
SC-2	MV 18+40 TO 19+50	L+	5
SC-2	MW 24+10 TO 25+10	L+	5
SC-5	CCSB 327+25 TO 326+25	L+	5
SC-6	CCSB 337+65 TO 338+90	L+	6
SC-7	CCSB 337+00 TO 338+00	L+	5
SC-10	CCSB 336+65 TO 337+40	L+	4
SC-10	CCSB 357+25 TO 358+25	R+	5
TOTAL			35

TEMPORARY RAILING (TYPE K)

SHEET No.	STATION	LOCATION	LF
SC-1	EA1 37+00 TO 39+90	R+	290
SC-1	CCSB 335+00 TO 337+50	R+	250
SC-2	EA1 39+90 TO 42+55	R+	265
SC-2	CCSB 337+50 TO 345+50	R+	800
SC-3	CCSB 345+50 TO 354+50	R+	900
SC-4	CCSB 354+50 TO 357+00	R+	250
SC-6	CCSB 326+50 TO 332+10	L+	550
SC-6	CCSB 329+96 TO 332+10	L+	214
SC-7	MW 19+52.5 TO MW 24+00	L+	448
SC-10	CCSB 332+10 TO 337+10	L+	500
TOTAL			4467

TEMPORARY CRASH CUSHION MODULE

SHEET No.	STATION	LOCATION	MODULE EA
SC-2	MW 19+52.5 TO 24+00	L+	22
SC-3	CCSB 320+85	R+	11
SC-5	CCSB 337+16	L+	14
SC-6	CCSB 332+00	L+	21
SC-7	EA1 37+00	R+	14
SC-10	CCSB 357+00	L+	14
TOTAL			96

4 **REPLACED PER ADDENDUM No. 4 DATED FEBRUARY 28, 2014**

2 **REPLACED PER ADDENDUM No. 2 DATED JANUARY 31, 2014**

STAGE CONSTRUCTION QUANTITIES

SCQ-1

REVISED BY	DATE REVISED
MP	9/24/12

MOHAMMAD POYA — JASWINDER MANN — CALCULATED-DESIGNED BY — CHECKED BY

FUNCTIONAL SUPERVISOR: JASWINDER MANN

STATE OF CALIFORNIA - DEPARTMENT OF TRANSPORTATION — DESIGN — Caltrans

LAST REVISION 11-30-12 — DATE PLOTTED => 27-FEB-2014 — TIME PLOTTED => 13:27

DIST	COUNTY	ROUTE	POST MILES TOTAL PROJECT	SHEET No.	TOTAL SHEETS
04	CC	680	22.7/24.8	115	186

REGISTERED CIVIL ENGINEER 10-10-12 DATE

5-20-13
PLANS APPROVAL DATE

REGISTERED PROFESSIONAL ENGINEER PHILIP E. LUTZ No. C58839 Exp. 12-31-14 CIVIL STATE OF CALIFORNIA

The State of California or its officers or agents shall not be responsible for the accuracy or completeness of electronic copies of this plan sheet.

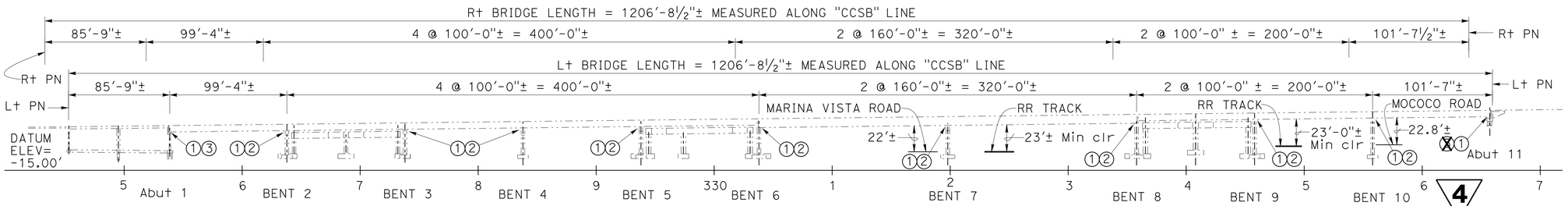

4

REPLACED PER ADDENDUM No. 4 DATED FEBRUARY 28, 2014

DEVELOPED ELEVATION

1" = 50'

LEGEND:

- Existing structure
- New structure
- ① Remove all Existing Restrainer Cables and Replace with New Cables
- ② Steel Corbel catcher blocks
- ③ Concrete Corbels
- ④ Petroleum Pipe Lines, see "ROAD PLANS".
- ⑤ Temporary protective fence 12' away from ℄ of each of exterior tracks. See "ROAD PLANS".
- ⑥ 10"ø Steel water pipe to remain in place.
- ⊗ Indicates Point of Minimum Vertical Clearance over existing roadways Note : Temporary minimum clearance is 15 ft.

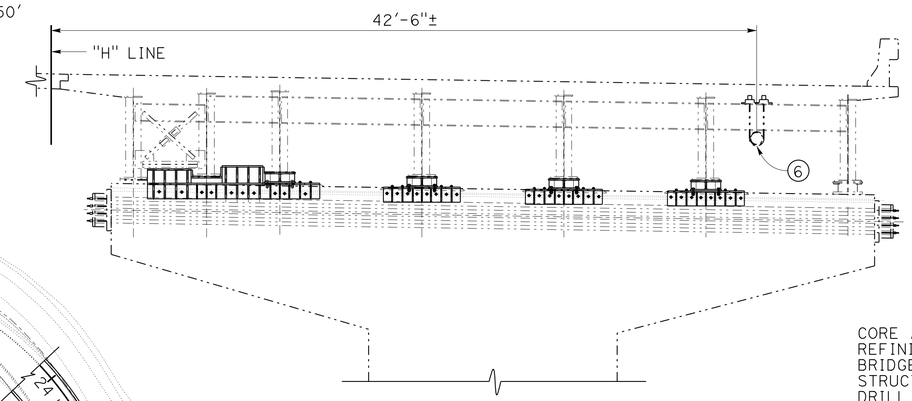

TYPICAL SECTION

No Scale

QUANTITIES:

CORE AND PRESSURE GROUT DOWEL	1,035	LF
REFINISH BRIDGE DECK	4	SQFT
BRIDGE REMOVAL (PORTION)	LUMP	SUM
STRUCTURAL CONCRETE, BRIDGE	23	CY
DRILL AND BOND DOWEL	1,703	LF
BAR REINFORCING STEEL (BRIDGE)	5,520	LB
STRUCTURAL STEEL (BRIDGE)	284,000	LB
CLEAN AND PAINT STRUCTURAL STEEL	LUMP	SUM
MISCELLANEOUS METAL (RESTRAINER - CABLE TYPE)	36,000	LB
CONCRETE BARRIER (TYPE 25R MODIFIED)	4	LF
RECONSTRUCT DOWN DRAINS	LUMP	SUM

2

NOTES:
1. All dimensions, stations and elevations shown for existing structures are ±.
2. For general notes, index to plans and quantity estimates, see "INDEX TO PLANS" sheet.

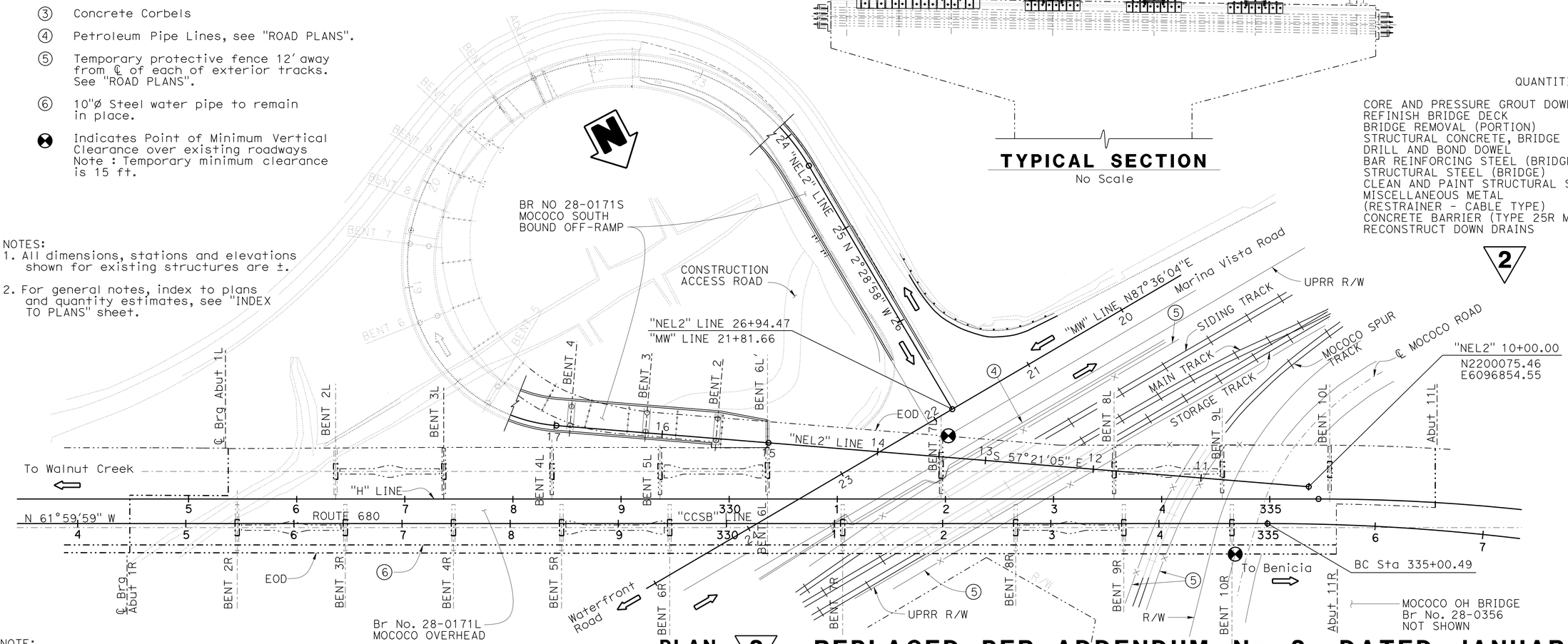

PLAN

1" = 50'

2

REPLACED PER ADDENDUM No. 2 DATED JANUARY 31, 2014

NOTE:
THE CONTRACTOR SHALL VERIFY ALL CONTROLLING FIELD DIMENSIONS BEFORE ORDERING OR FABRICATING ANY MATERIAL.

GORDON DANKE
DESIGN ENGINEER

	BY	CHECKED			
DESIGN	John Railey	Mike Van De Pol	LOAD & RESISTANCE FACTOR DESIGN	LIVE LOADING: HL93 W/"LOW-BOY"; PERMIT DESIGN VEHICLE	
DETAILS	JFCasarino / CCancino	Mike Van De Pol	LAYOUT	Glenn Matthews	John Railey
QUANTITIES	John Railey	E. Franciliso / I. Yalan	SPECIFICATIONS	Tina Chen	PLANS AND SPECS COMPARED John Railey

STATE OF CALIFORNIA
DEPARTMENT OF TRANSPORTATION

DIVISION OF ENGINEERING SERVICES
STRUCTURE DESIGN
DESIGN BRANCH 9

BRIDGE NO. 28-0171L
POST MILE 24.3

MOCOCO OVERHEAD RETROFIT
GENERAL PLAN

FILE => 28-0171-a-gp.add

ORIGINAL SCALE IN INCHES FOR REDUCED PLANS 0 1 2 3

UNIT: 3594
PROJECT NUMBER & PHASE: 0400000967 1
CONTRACT NO.: 04-3A8701

DISREGARD PRINTS BEARING EARLIER REVISION DATES

REVISION DATES 10-11-11 1-3-14 10-16-12

SHEET 1 OF 34

USERNAME => s121614 DATE PLOTTED => 27-FEB-2014 TIME PLOTTED => 06:33

STRUCTURES DESIGN GENERAL PLAN SHEET (ENGLISH) (REV.09-01-10)

DIST	COUNTY	ROUTE	POST MILES TOTAL PROJECT	SHEET No.	TOTAL SHEETS
04	CC	680	22.7/24.8	128	186

REGISTERED CIVIL ENGINEER 10-10-12 DATE

5-20-13
PLANS APPROVAL DATE

REGISTERED PROFESSIONAL ENGINEER PHILIP E. LUTZ No. C58839 Exp. 12-31-14 CIVIL STATE OF CALIFORNIA

The State of California or its officers or agents shall not be responsible for the accuracy or completeness of electronic copies of this plan sheet.

NOTE:
THE CONTRACTOR SHALL VERIFY ALL CONTROLLING FIELD DIMENSIONS BEFORE ORDERING OR FABRICATING ANY MATERIAL.

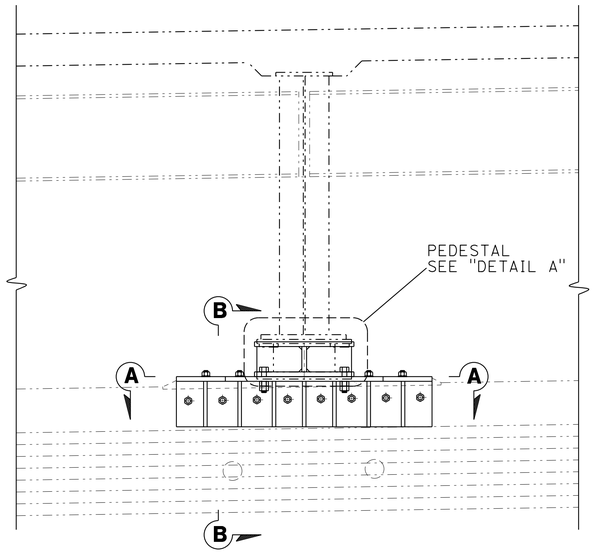

BENT PART ELEVATION

3/4"=1'-0"

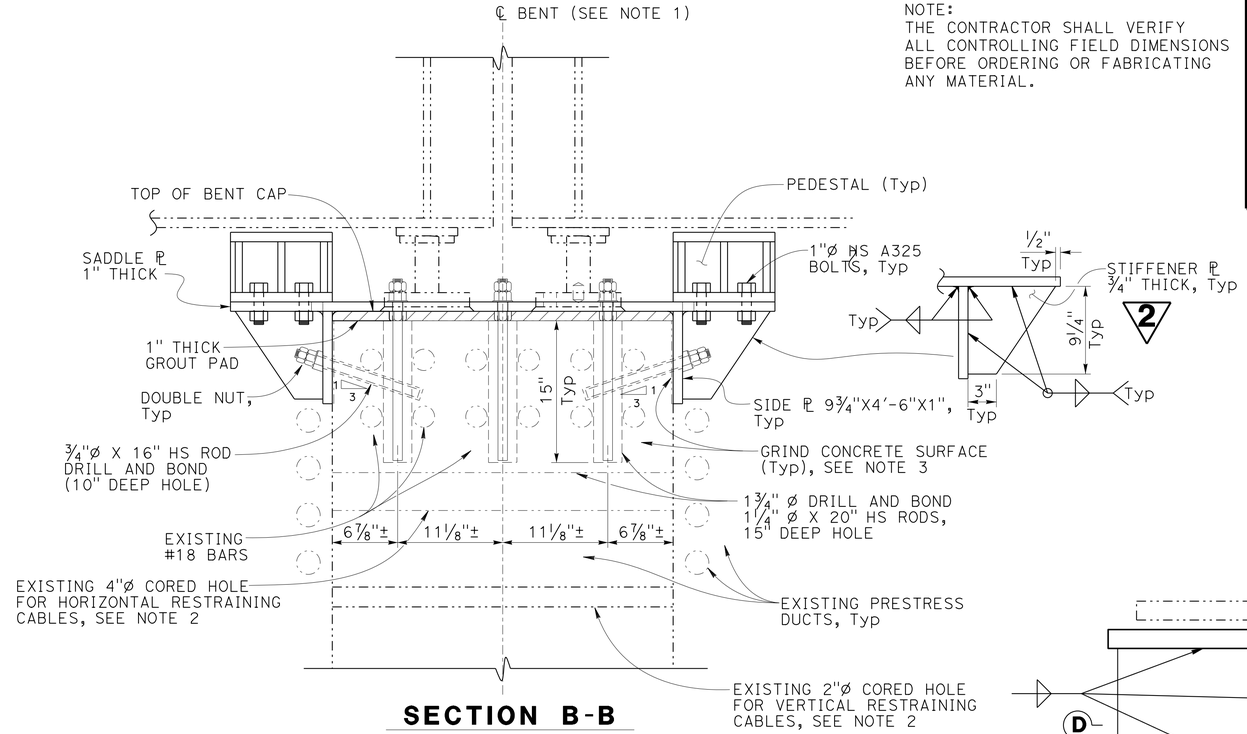

SECTION B-B

1 1/2"=1'-0"

LEGEND:
-·-·-·- Indicates existing structure

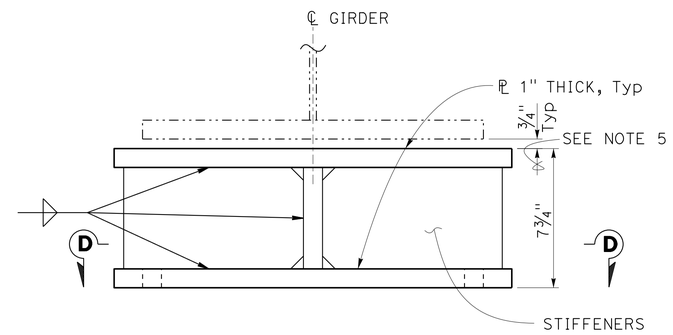

DETAIL A

3"=1'-0"

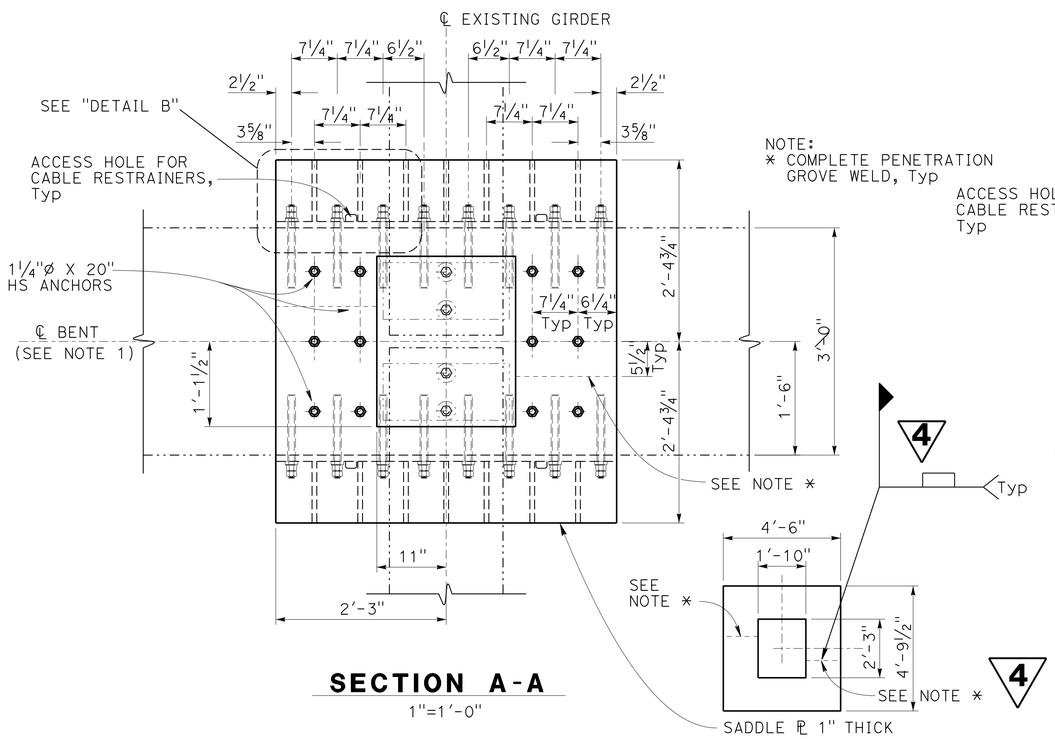

NOTE:
* COMPLETE PENETRATION GROVE WELD, Typ

SECTION A-A

1"=1'-0"

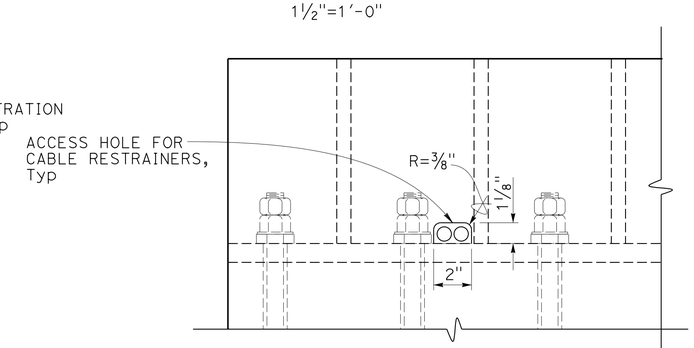

DETAIL B

3"=1'-0"

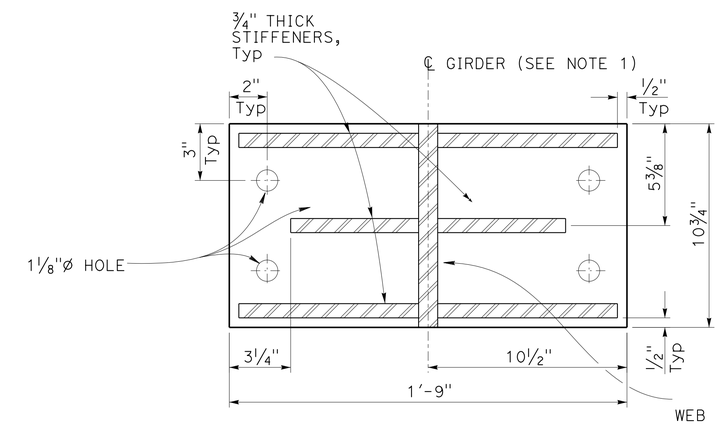

SECTION D-D

3"=1'-0"

NOTES:

1. For Bents 2RL thru 5RL, 9R and 10R.
2. For Restraining Cable Details, see "RESTRAINER DETAILS CORBEL B" on "RESTRAINER DETAILS NO. 3" sheet.
3. Grind concrete surface to 1/16"± tolerance to assure full bearing of side plates.
4. See "NOTES: CONSTRUCTION SEQUENCE FOR STEEL CORBLES" on "INDEX TO PLANS" sheet.
5. Gap between corbel plate and bottom flange is 3/4" (TYPICAL FOR ALL CORBEL TYPES).

4 REPLACED PER ADDENDUM No. 4 DATED FEBRUARY 28, 2014

2 REPLACED PER ADDENDUM No. 2 DATED JANUARY 31, 2014

DESIGN	BY John Railey	CHECKED Mike Van De Pol	
DETAILS	BY CCancino	CHECKED Mike Van De Pol	
QUANTITIES	BY John Railey	CHECKED E. Franciliso	

STATE OF CALIFORNIA
DEPARTMENT OF TRANSPORTATION

DIVISION OF ENGINEERING SERVICES
STRUCTURE DESIGN
DESIGN BRANCH 9

BRIDGE NO. 28-0171L
POST MILE 24.3

MOCOCO OVERHEAD RETROFIT
CORBEL - TYPE B DETAILS

STRUCTURES DESIGN DETAIL SHEET (ENGLISH) (REV. 09-01-10)
FILE => 28-0171-e-bent2-5.dgn

ORIGINAL SCALE IN INCHES FOR REDUCED PLANS 0 1 2 3

UNIT: 3594
PROJECT NUMBER & PHASE: 0400000967 1
CONTRACT NO.: 04-3A8701

DISREGARD PRINTS BEARING EARLIER REVISION DATES

REVISION DATES 8-16-12 07-16-13 01-23-13

SHEET 14 OF 34

USERNAME => s123631 DATE PLOTTED => 26-FEB-2014 TIME PLOTTED => 12:36

DIST	COUNTY	ROUTE	POST MILES TOTAL PROJECT	SHEET No.	TOTAL SHEETS
04	CC	680	22.7/24.8	129A	186

REGISTERED CIVIL ENGINEER 10-10-12 DATE

5-20-13
PLANS APPROVAL DATE

REGISTERED PROFESSIONAL ENGINEER PHILIP E. LUTZ No. C58839 Exp. 12-31-14 CIVIL STATE OF CALIFORNIA

The State of California or its officers or agents shall not be responsible for the accuracy or completeness of electronic copies of this plan sheet.

This is an additional sheet to 129 of 186.

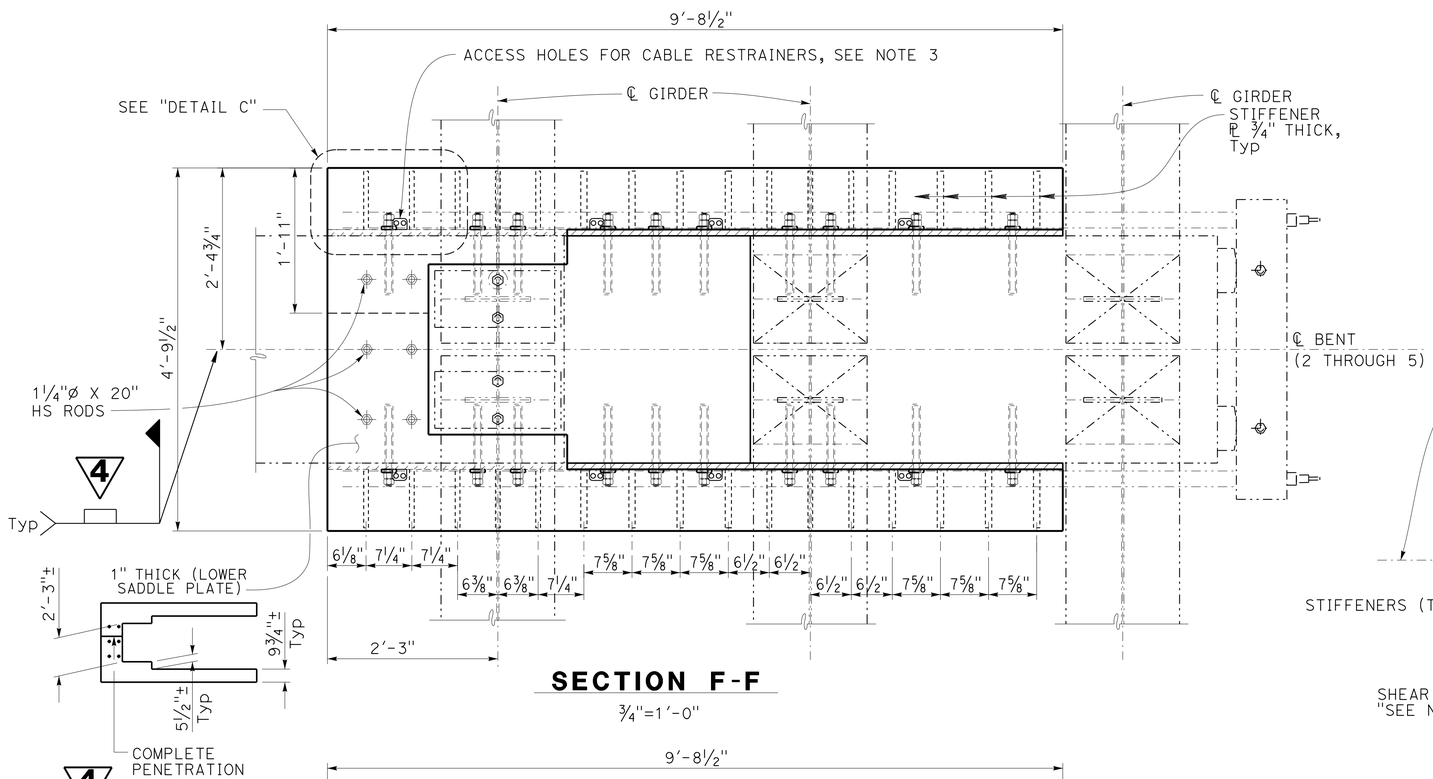

SECTION F-F

¾"=1'-0"

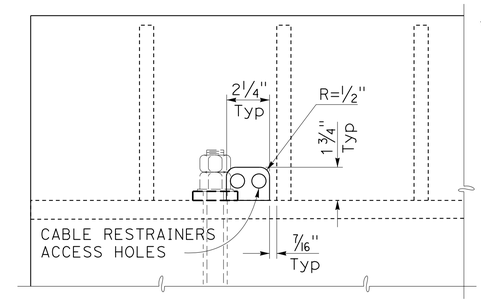

DETAIL C

3"=1'-0"

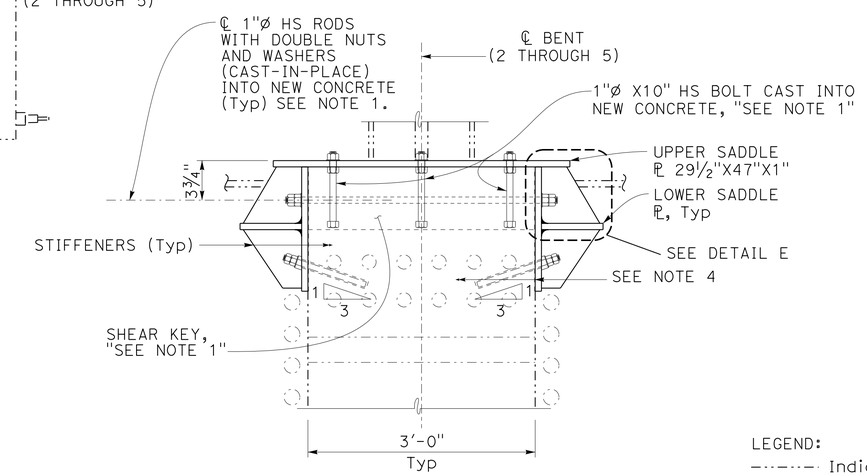

SECTION D-D

1"=1'-0"

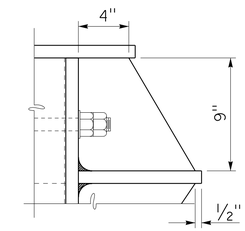

DETAIL E

NO SCALE

LEGEND:

-·-·-·- Indicates existing structure

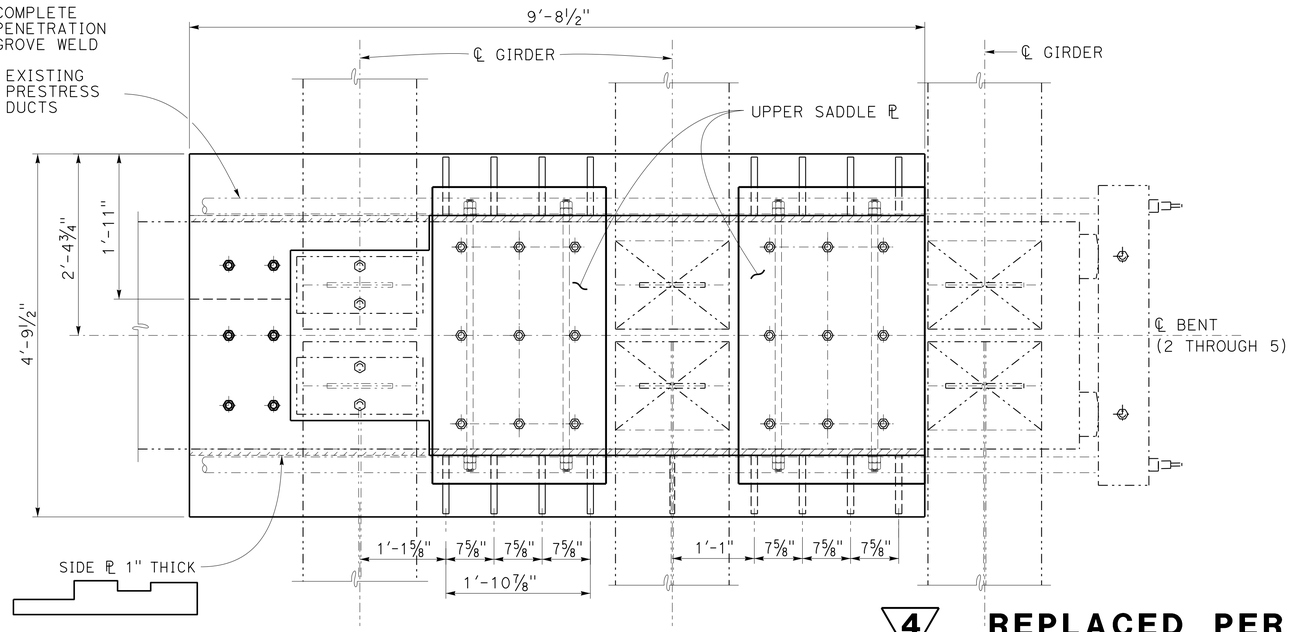

SECTION E-E

¾"=1'-0"

NOTES:

1. For further shear key details, see "SHEAR KEY REMOVAL" sheet.
2. For Pedestals "DETAIL A" and "DETAIL B", see "CORBEL - TYPE C DETAILS NO. 2" sheet.
3. Cable Restrainers not shown, see "RESTRAINER DETAILS NO. 3" sheet for details omitted.
4. Grind concrete surface to 1/16"± tolerance to assure full bearing of side plates.
5. See "NOTES: CONSTRUCTION SEQUENCE FOR STEEL CORBELS" on "INDEX TO PLANS" sheet.
6. Gap between corbel plate and bottom flange is ¾".
7. Reference for Sections D-D, E-E and F-F, see "CORBEL - TYPE C DETAILS NO. 1" sheet.
8. Welding of stiffeners and plates typical for Sections A-A, C-C and D-D.

NOTE:
THE CONTRACTOR SHALL VERIFY ALL CONTROLLING FIELD DIMENSIONS BEFORE ORDERING OR FABRICATING ANY MATERIAL.

4 **REPLACED PER ADDENDUM No. 4 DATED FEBRUARY 28, 2014**

2 **ADDED PER ADDENDUM No. 2 DATED JANUARY 31, 2014**

DESIGN	BY John Railey	CHECKED Mike Van De Pol	
DETAILS	BY JfCasarino	CHECKED Mike Van De Pol	
QUANTITIES	BY John Railey	CHECKED I. Yalan	

STATE OF CALIFORNIA
DEPARTMENT OF TRANSPORTATION

DIVISION OF ENGINEERING SERVICES
STRUCTURE DESIGN
DESIGN BRANCH 9

BRIDGE NO. 28-0171L
POST MILE 24.3

MOCOCO OVERHEAD RETROFIT
CORBEL - TYPE C DETAILS NO. 1A

STRUCTURES DESIGN DETAIL SHEET (ENGLISH) (REV. 09-01-10)
FILE => 28-0171-e-bent2-5_1a.dgn

ORIGINAL SCALE IN INCHES FOR REDUCED PLANS 0 1 2 3

UNIT: 3594
PROJECT NUMBER & PHASE: 0400000967 1
CONTRACT NO.: 04-3A8701

DISREGARD PRINTS BEARING EARLIER REVISION DATES

REVISION DATES 11-21-13

SHEET 15A OF 34

USERNAME => s121614 DATE PLOTTED => 27-FEB-2014 TIME PLOTTED => 06:36

DIST	COUNTY	ROUTE	POST MILES TOTAL PROJECT	SHEET No.	TOTAL SHEETS
04	CC	680	22.7/24.8	135	186

REGISTERED CIVIL ENGINEER — DATE 10-10-12

PLANS APPROVAL DATE 5-20-13

REGISTERED PROFESSIONAL ENGINEER — PHILIP E. LUTZ No. C58839 Exp. 12-31-14 CIVIL — STATE OF CALIFORNIA

The State of California or its officers or agents shall not be responsible for the accuracy or completeness of electronic copies of this plan sheet.

LEGEND:

- - - - - Indicates existing structure

◇Be Denotes Girder Designation

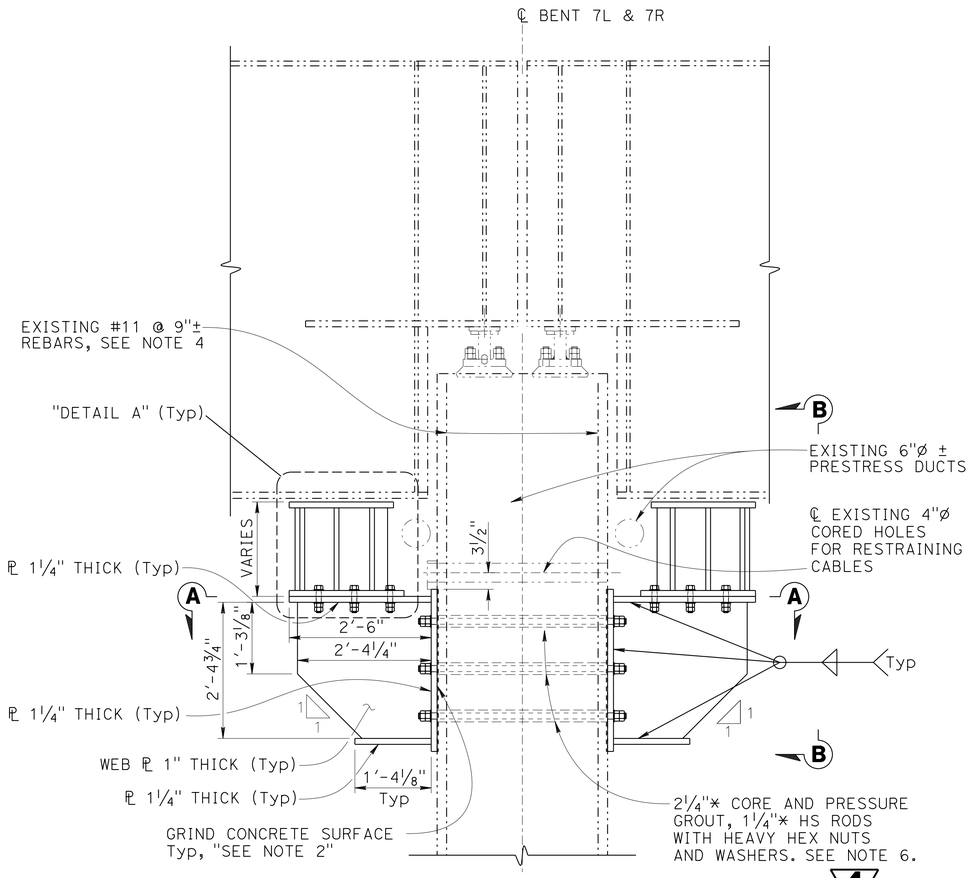

BENT SIDE ELEVATION

¾"=1'-0"

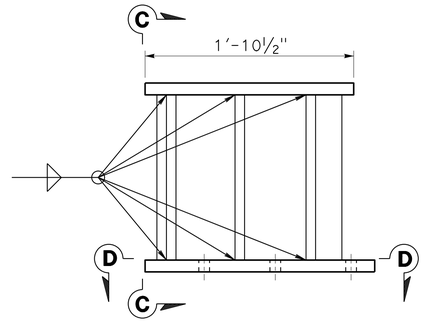

DETAIL A

1½"=1'-0"

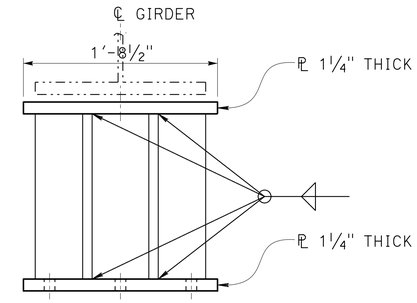

VIEW C-C

1½"=1'-0"

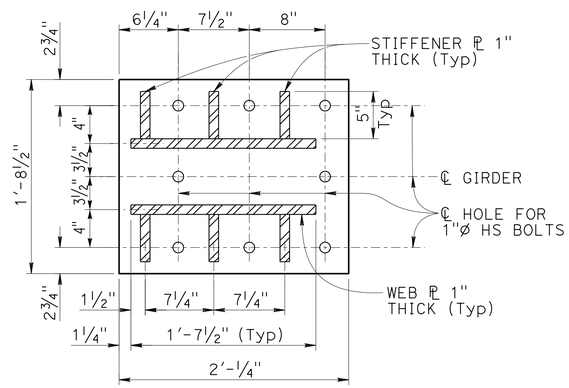

SECTION D-D

1½"=1'-0"

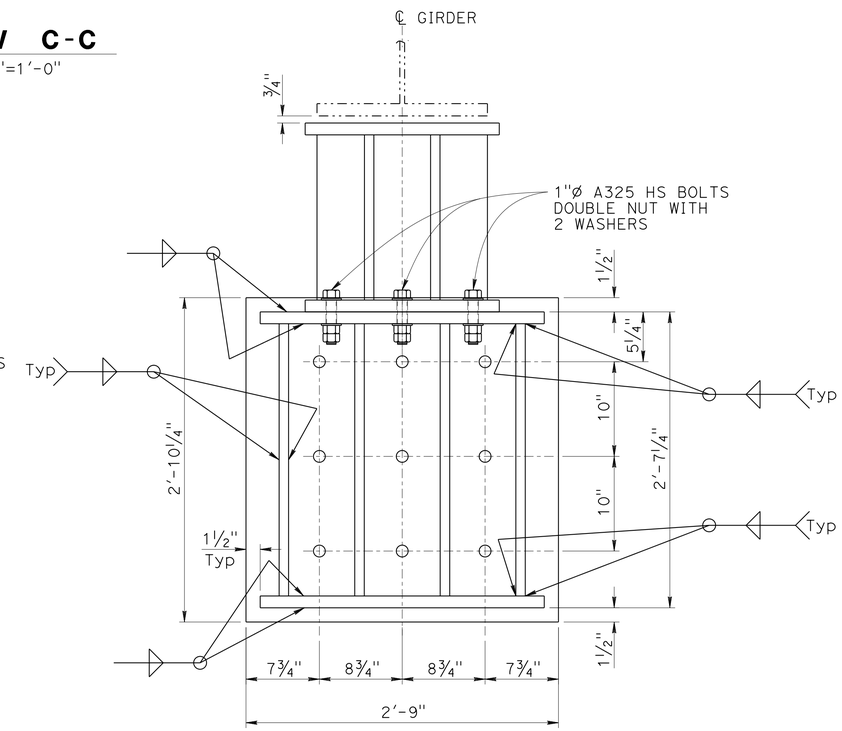

VIEW B-B

1½"=1'-0"

4 **REPLACED PER ADDENDUM No. 4 DATED FEBRUARY 28, 2014**

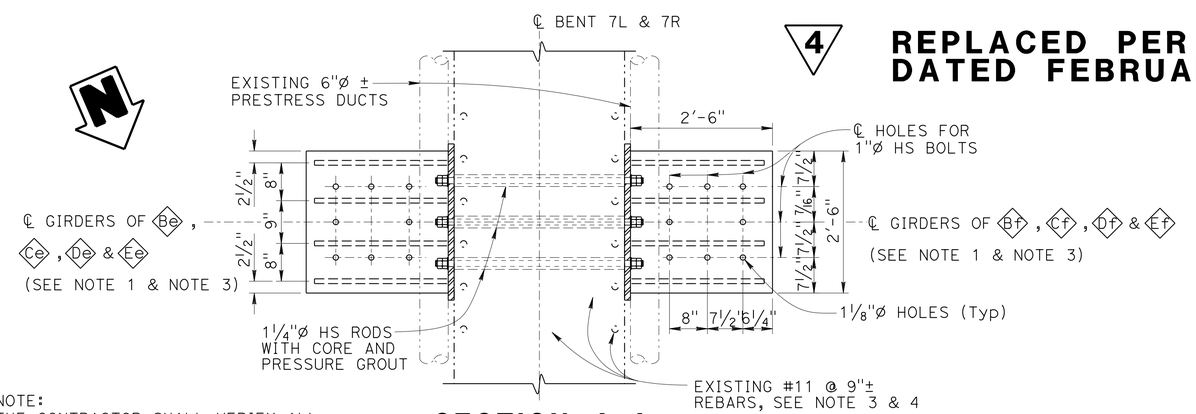

SECTION A-A

¾"=1'-0"

NOTE:
THE CONTRACTOR SHALL VERIFY ALL CONTROLLING FIELD DIMENSIONS BEFORE ORDERING OR FABRICATING ANY MATERIAL.

NOTES:

1. For location of girders, see "STRUCTURE SECTION NO. 3" sheet.
2. Grind concrete surface to 1/16"35/64 tolerance to assure full bearing of side plates.
3. Configuration of Corbel - Type E to be used at Bent 7R.
4. Contractor shall locate existing #11 @ 9"35/64 column rebars prior to coring 2½"* holes (Typical for all corbels).
5. See "NOTES: CONSTRUCTION SEQUENCE FOR STEEL CORBELS" on "INDEX TO PLANS" sheet.
6. In the case where HS Rods are not perpendicular to plates, beveled washers are required.

4

	BY	CHECKED
DESIGN	John Railey	Mike Van De Pol
DETAILS	CCancino	Mike Van De Pol
QUANTITIES	John Raily	E. Franciliso

STATE OF CALIFORNIA DEPARTMENT OF TRANSPORTATION

DIVISION OF ENGINEERING SERVICES STRUCTURE DESIGN — DESIGN BRANCH 9

BRIDGE NO. 28-0171L — POST MILE 24.3

MOCOCO OVERHEAD RETROFIT

CORBEL - TYPE E DETAILS NO. 1

STRUCTURES DESIGN DETAIL SHEET (ENGLISH) (REV. 09-01-10)

ORIGINAL SCALE IN INCHES FOR REDUCED PLANS 0 1 2 3

UNIT: 3594
PROJECT NUMBER & PHASE: 0400000967 1
CONTRACT NO.: 04-3A8701

DISREGARD PRINTS BEARING EARLIER REVISION DATES

REVISION DATES: 08-15-12 01-23-13 10-22-12

SHEET 21 OF 34

FILE => 28-0171-e-bent7_01.dgn

USERNAME => s123631 DATE PLOTTED => 26-FEB-2014 TIME PLOTTED => 12:36

DIST	COUNTY	ROUTE	POST MILES TOTAL PROJECT	SHEET No.	TOTAL SHEETS
04	CC	680	22.7/24.8	144	186

REGISTERED CIVIL ENGINEER 10-10-12 DATE

5-20-13
PLANS APPROVAL DATE

REGISTERED PROFESSIONAL ENGINEER
PHILIP E. LUTZ
No. C58839
Exp. 12-31-14
CIVIL
STATE OF CALIFORNIA

The State of California or its officers or agents shall not be responsible for the accuracy or completeness of electronic copies of this plan sheet.

4

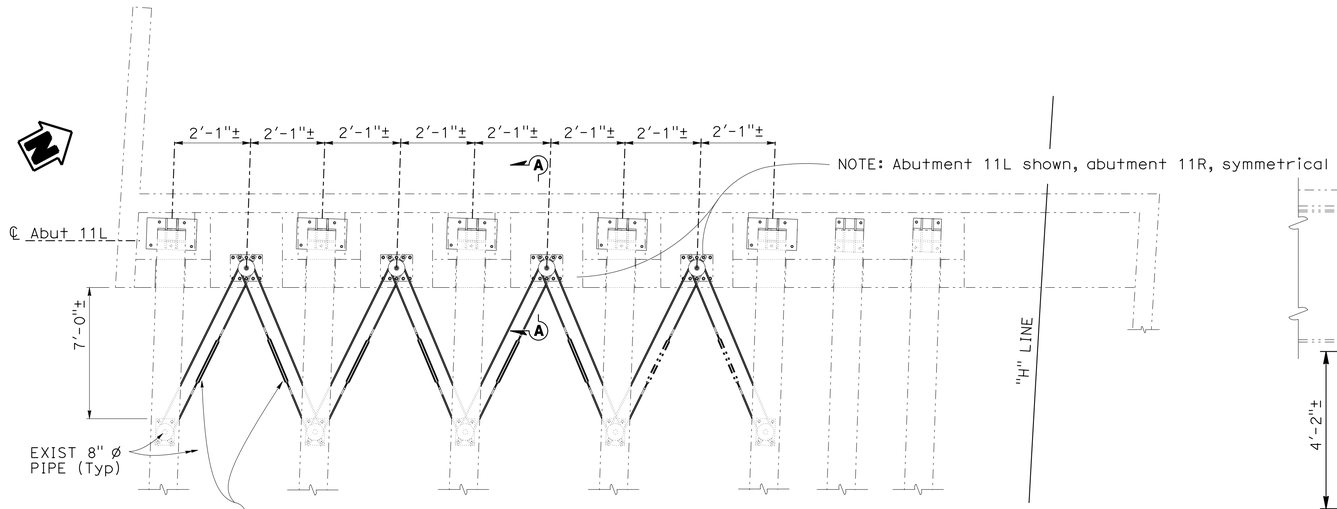

RESTRAINER AT ABUTMENT- PLAN

No Scale

NOTE: Abutment 11L shown, abutment 11R, symmetrical

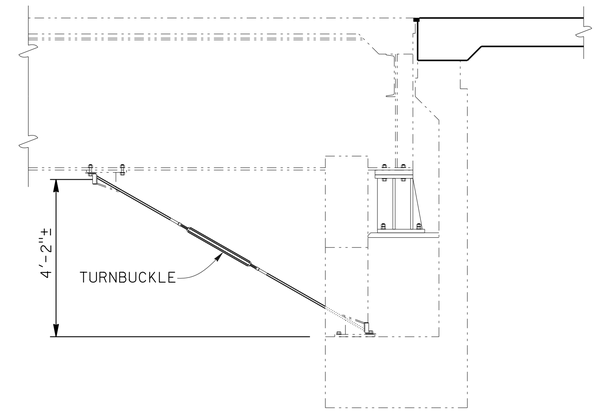

SECTION A-A

No Scale

LEGEND:

-·-·-·- Indicates existing structure

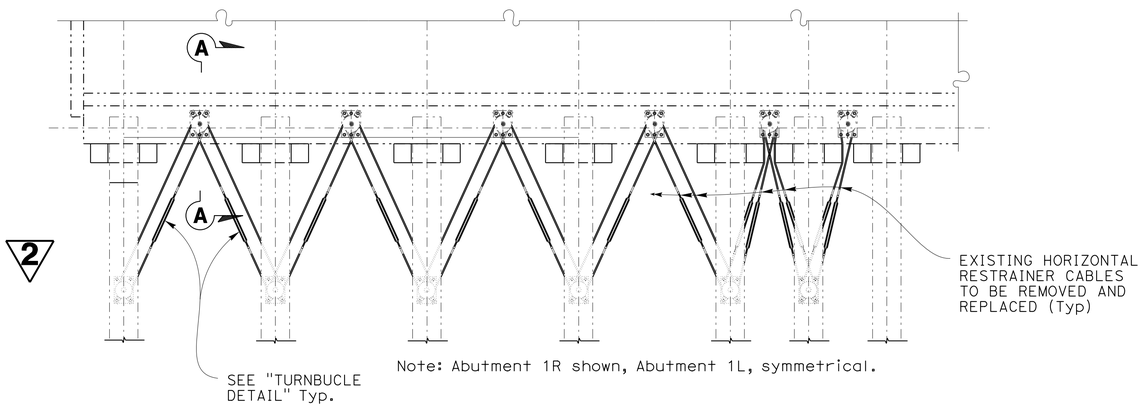

2

PLAN

No Scale

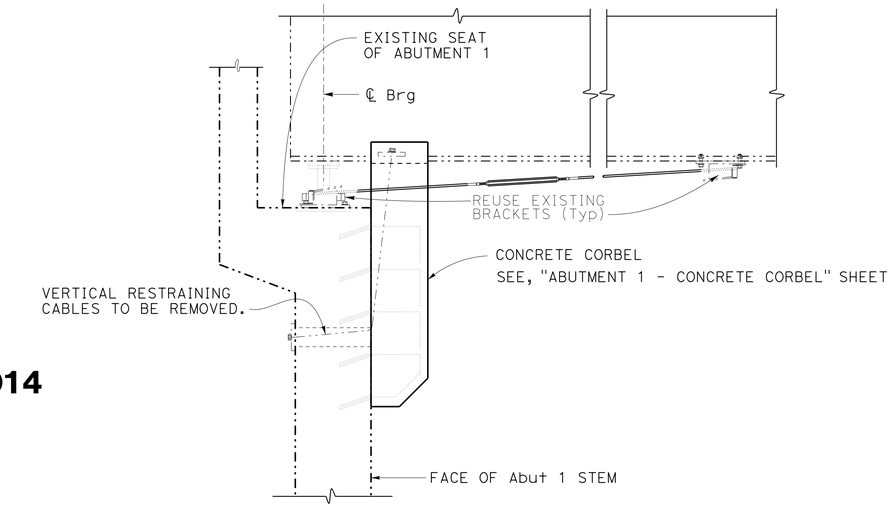

SECTION A-A

1"=1'-0"

4 **REPLACED PER ADDENDUM No. 4 DATED FEBRUARY 28, 2014**

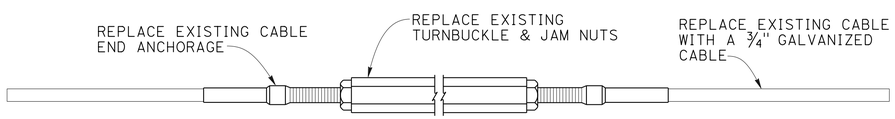

NOTE:

Tighten turnbuckle to 20 ft-lbs, back off 5 turns and tighten jam nuts.

TURNBUCKLE DETAIL

No Scale

2 **REPLACED PER ADDENDUM No. 2 DATED JANUARY 31, 2014**

NOTE:
THE CONTRACTOR SHALL VERIFY ALL CONTROLLING FIELD DIMENSIONS BEFORE ORDERING OR FABRICATING ANY MATERIAL.

	BY	CHECKED
DESIGN	John Railey	Mike Van De Pol
DETAILS	CCancino	Mike Van De Pol
QUANTITIES	John Railey	Glenn Matthews

STATE OF CALIFORNIA
DEPARTMENT OF TRANSPORTATION

DIVISION OF ENGINEERING SERVICES
STRUCTURE DESIGN
DESIGN BRANCH 9

BRIDGE NO. 28-0171L
POST MILE 24.3

MOCOCO OVERHEAD RETROFIT
RESTRAINER DETAILS NO. 2

STRUCTURES DESIGN DETAIL SHEET (ENGLISH) (REV. 09-01-10)
FILE => 28-0171-h-rest_det02.add

ORIGINAL SCALE IN INCHES FOR REDUCED PLANS 0 1 2 3

UNIT: 3594
PROJECT NUMBER & PHASE: 0400000967 1
CONTRACT NO.: 04-3A8701

DISREGARD PRINTS BEARING EARLIER REVISION DATES

REVISION DATES: 12-10-13

SHEET 30 OF 34

USERNAME => s123631 DATE PLOTTED => 26-FEB-2014 TIME PLOTTED => 12:36

DIST	COUNTY	ROUTE	POST MILES TOTAL PROJECT	SHEET No.	TOTAL SHEETS
04	CC	680	22.7/24.8	158	186

REGISTERED CIVIL ENGINEER — DATE 10-10-12

5-20-13
PLANS APPROVAL DATE

REGISTERED PROFESSIONAL ENGINEER — PHILIP E. LUTZ — No. C55839 — Exp. 12-31-14 — CIVIL — STATE OF CALIFORNIA

The State of California or its officers or agents shall not be responsible for the accuracy or completeness of electronic copies of this plan sheet.

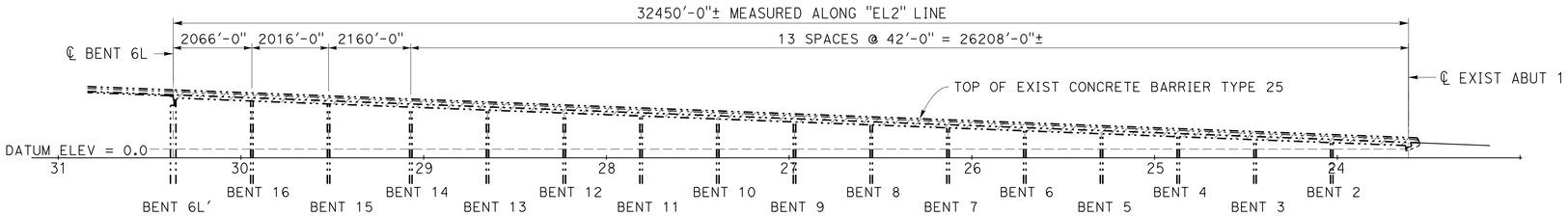

DEVELOPED ELEVATION

1" = 40'

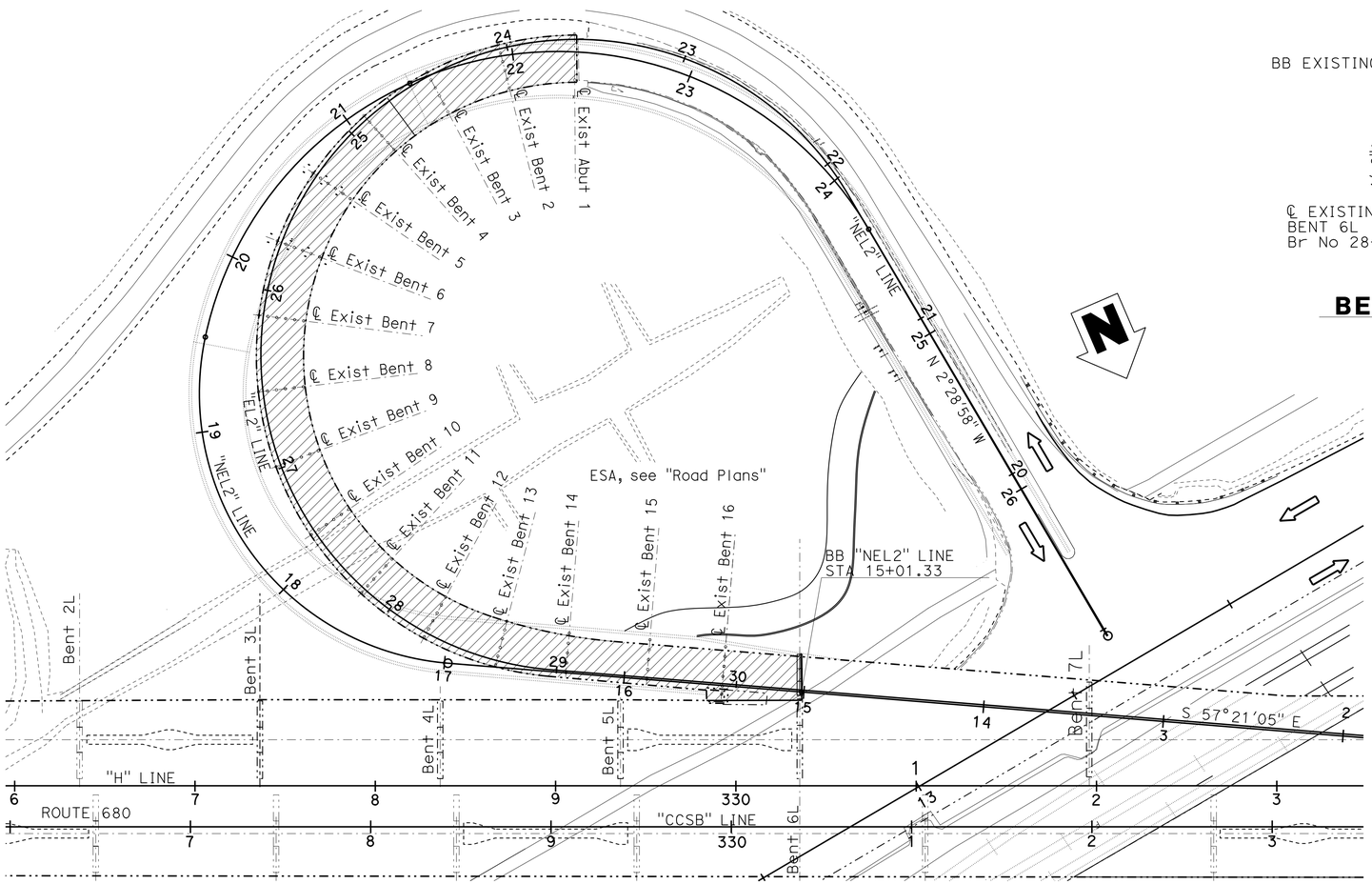

PLAN

1" = 40'

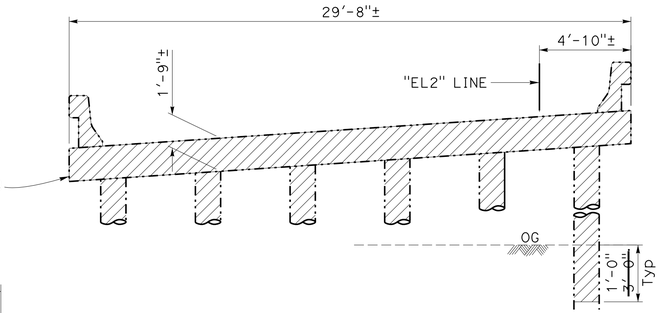

TYPICAL SECTION

1/4" = 1'-0"

4

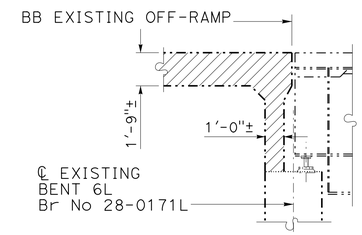

BENT 6 LEFT

1/4" = 1'-0"

4

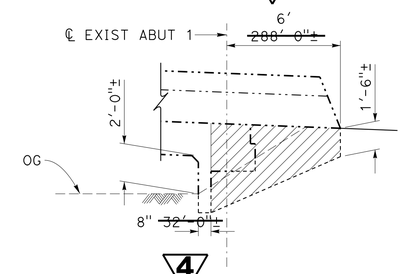

4

WINGWALL REMOVAL

1/4" = 1'-0"

LEGEND

- Denotes limits of Bridge removal.
- Denotes existing structure.
- Denotes replacement off-ramp.

4 **REPLACED PER ADDENDUM No. 4 DATED FEBRUARY 28, 2014**

	BY	CHECKED
DESIGN	Glenn Matthews	Phil Lutz
DETAILS	JFCasarino	Phil Lutz
QUANTITIES	Phil Lutz	Glenn Matthews

STATE OF CALIFORNIA
DEPARTMENT OF TRANSPORTATION

DIVISION OF ENGINEERING SERVICES
STRUCTURE DESIGN
DESIGN BRANCH 9

BRIDGE NO. 28-0171S
POST MILE 24.3

MOCOCO SOUTHBOUND OFF-RAMP
DEMOLITION DETAILS

STRUCTURES DESIGN DETAIL SHEET (ENGLISH) (REV. 09-01-10)

ORIGINAL SCALE IN INCHES FOR REDUCED PLANS 0 1 2 3

UNIT: 3594 FILE => 28-0171s-f-demo.dgn
PROJECT NUMBER & PHASE: 0400000967 1 CONTRACT NO.: 04-3A8701

DISREGARD PRINTS BEARING EARLIER REVISION DATES

REVISION DATES: 2-14-12 6-28-12 8-2-12 7-16-13

SHEET 10 OF 38

USERNAME => s123631 DATE PLOTTED => 26-FEB-2014 TIME PLOTTED => 12:37