| Dist | COUNTY | ROUTE | POST MILES TOTAL PROJECT | SHEET No. | TOTAL SHEETS |
|---|---|---|---|---|---|
| 04 | Son | 101 | 25.6/29.2 | 1 | 615 |

STATE OF CALIFORNIA

# DEPARTMENT OF TRANSPORTATION

# PROJECT PLANS FOR CONSTRUCTION ON

# STATE HIGHWAY

## IN SONOMA COUNTY
## IN AND NEAR WINDSOR AT VARIOUS LOCATIONS
## FROM 0.3 MILE SOUTH OF FULTON ROAD OVERCROSSING
## TO 0.2 MILE SOUTH OF WINDSOR LANE UNDERCROSSING

TO BE SUPPLEMENTED BY STANDARD PLANS DATED MAY 2006

INDEX OF PLANS


| SHEET No. | DESCRIPTION |
|---|---|
| 1 | TITLE AND LOCATION MAP |
| 2-7 | TYPICAL CROSS SECTIONS |
| 8-9 | KEY MAP AND LINE INDEX |
| 10-23 | LAYOUTS |
| 24-34 | PROFILES AND SUPERELEVATION DIAGRAM |
| 35-73 | CONSTRUCTION DETAILS |
| 74 | TEMPORARY WATER POLLUTION CONTROL QUANTITIES |
| 75-91 | EROSION CONTROL PLAN, DETAILS AND QUANTITIES |
| 92-96 | CONTOUR GRADING |
| 97-170 | DRAINAGE PLANS, PROFILES, DETAILS AND QUANTITIES |
| 171-174 | TEMPORARY DRAINAGE PLANS AND DETAILS |
| 175-185 | SANITARY SEWER PLANS, PROFILES, DETAILS AND QUANTITIES |
| 186-196 | UTILITY PLANS |
| 197-198 | CONSTRUCTION AREA SIGNS |
| 199-263 | STAGE CONSTRUCTION PLANS |
| 264-272 | TRAFFIC HANDLING PLANS |
| 273-276 | DETOUR PLANS |
| 277-290 | PAVEMENT DELINEATION PLAN |
| 291-312 | SIGN PLAN |
| 313-317 | SUMMARY OF QUANTITIES |
| 318-357 | SOUND WALL PLANS |
| 358-374 | HIGHWAY PLANTING, IRRIGATION PLANS AND DETAILS |
| 375-429 | SIGNAL, LIGHTING, ELECTRICAL PLANS AND DETAILS |
| 430-435 | SPECIAL ELECTRICAL STRUCTURES |
| 436-528 | REVISED AND NEW STANDARD PLANS |

STRUCTURE PLANS

| | |
|---|---|
| 529-545 | MARK WEST CREEK BRIDGE (WIDEN), Br No. 20-0180 |
| 546-581 | AIRPORT Blvd OC (REPLACE), Br No. 20-0297 |
| 582-601 | MARK WEST CREEK BRIDGE NB OFF-RAMP, Br No. 20-0298 |
| 602-615 | RETAINING WALL 1, Br No. 20E0066 |


THE STANDARD PLANS LIST APPLICABLE TO THIS CONTRACT IS INCLUDED IN THE NOTICE TO BIDDERS AND SPECIAL PROVISIONS BOOK.

LOCATION MAP

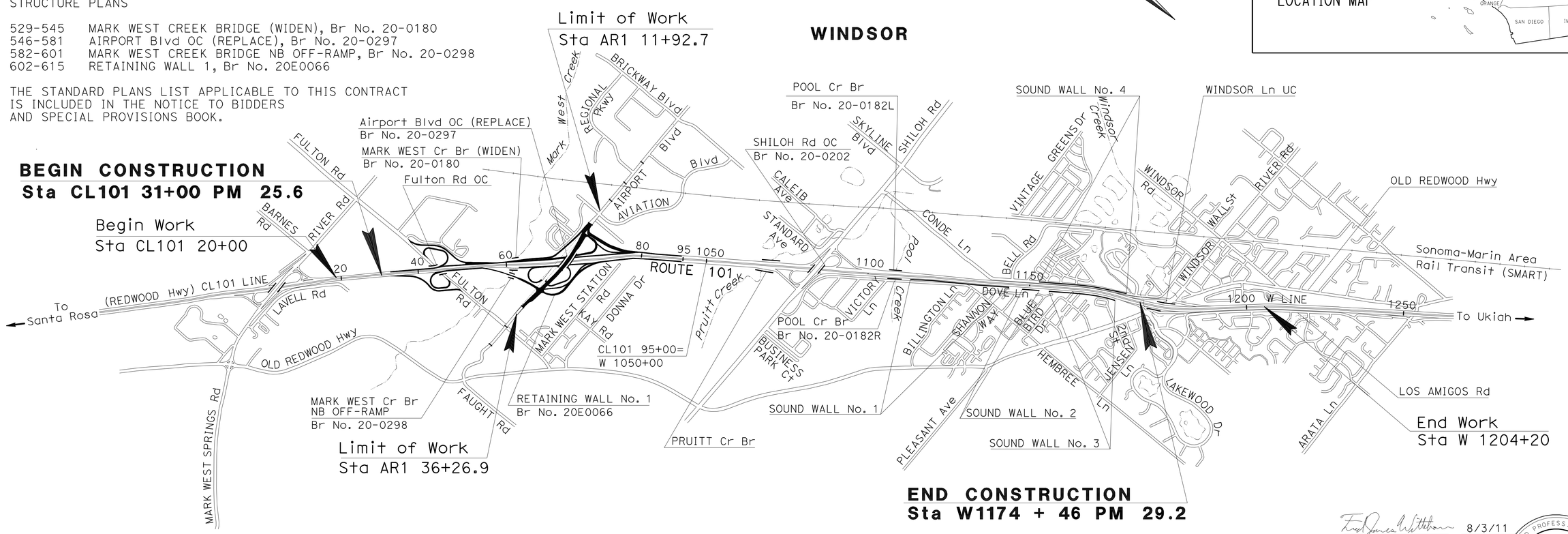


NO SCALE

THE CONTRACTOR SHALL POSSESS THE CLASS (OR CLASSES) OF LICENSE AS SPECIFIED IN THE "NOTICE TO BIDDERS."

PROJECT MANAGER: REY CENTENO

DESIGN ENGINEER: JONATHAN LEE

Fred James Witteborn 8/3/11
PROJECT ENGINEER DATE
REGISTERED CIVIL ENGINEER

September 10, 2012
PLANS APPROVAL DATE

REGISTERED PROFESSIONAL ENGINEER Fred J. Witteborn No. 56272 Exp. 12-31-12 CIVIL STATE OF CALIFORNIA

*THE STATE OF CALIFORNIA OR ITS OFFICERS OR AGENTS SHALL NOT BE RESPONSIBLE FOR THE ACCURACY OR COMPLETENESS OF SCANNED COPIES OF THIS PLAN SHEET.*

| CONTRACT No. | 04-3A23U4 |
|---|---|
| PROJECT ID | 0400020945 |

LAST REVISION 02-14-12

DATE PLOTTED => 13-SEP-2012
TIME PLOTTED => 14:27

| Dist | COUNTY | ROUTE | POST MILES TOTAL PROJECT | SHEET No. | TOTAL SHEETS |
|---|---|---|---|---|---|
| 04 | Son | 101 | 25.6/29.2 | 2 | 615 |

REGISTERED CIVIL ENGINEER 8/3/11 DATE

9-10-12
PLANS APPROVAL DATE

REGISTERED PROFESSIONAL ENGINEER Fred J. Witteborn No. 56272 Exp. 12-31-12 CIVIL STATE OF CALIFORNIA

*THE STATE OF CALIFORNIA OR ITS OFFICERS OR AGENTS SHALL NOT BE RESPONSIBLE FOR THE ACCURACY OR COMPLETENESS OF SCANNED COPIES OF THIS PLAN SHEET.*

ROUTE 101
DESIGN DESIGNATION

AR1 LINE : TI (20) = 11.5
ESAL = 8132439

RAMPS : TI (20) = 10
ESAL = 873934

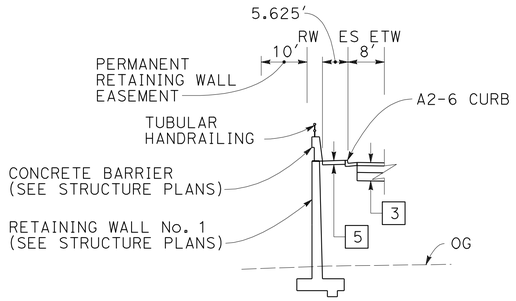


AR1 30+64.30 TO 33+67
**WESTBOUND**

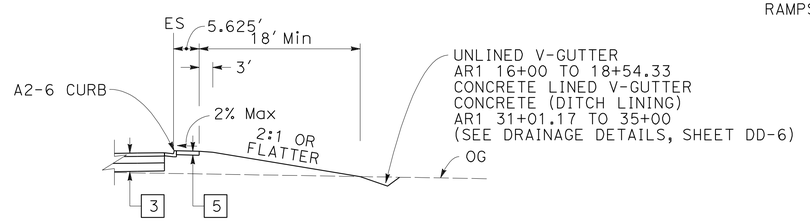


AR1 13+50 TO 16+17.94
AR1 31+01.17 TO 36+24.91
**EASTBOUND**

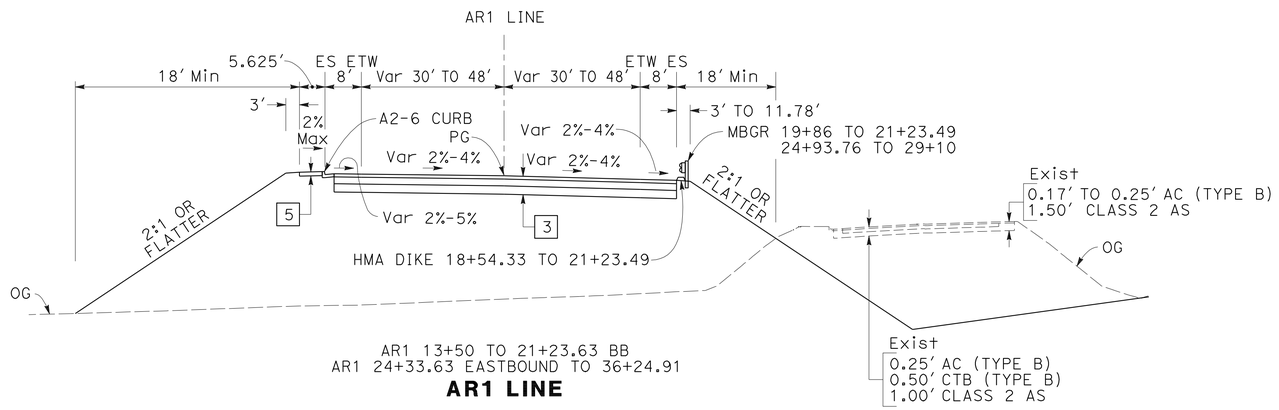


AR1 13+50 TO 21+23.63 BB
AR1 24+33.63 EASTBOUND TO 36+24.91
**AR1 LINE**

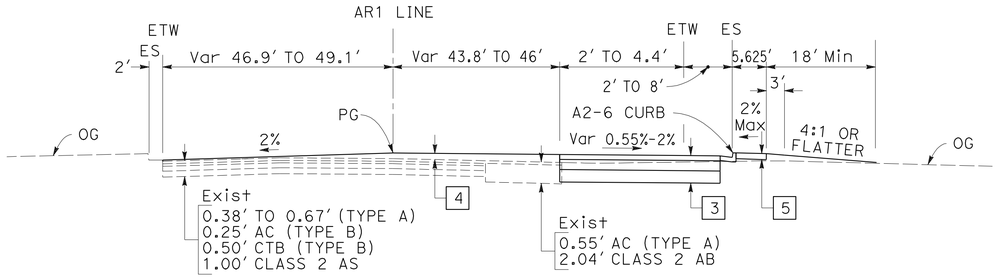


AR1 12+50 TO 13+50
**AR1 LINE**

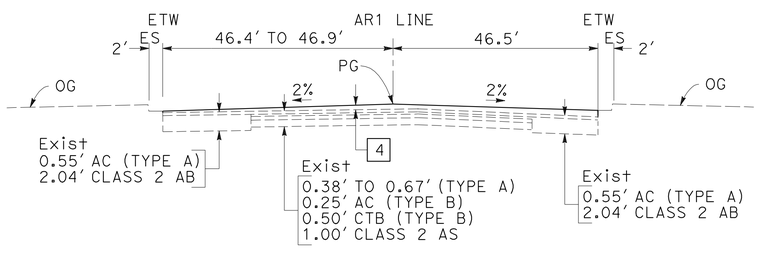


AR1 11+92.66 TO 12+50
**AR1 LINE**

## NOTES:

1. DIMENSIONS OF THE PAVEMENT STRUCTURES (STRUCTURAL SECTIONS) ARE SUBJECT TO TOLERANCES SPECIFIED IN THE STANDARD SPECIFICATIONS.
2. SUPERELEVATIONS ARE SHOWN ON THE SUPERELEVATION DIAGRAMS.

### TYPICAL PAVEMENT STRUCTURE SECTIONS

1
- 0.10' HMA (OPEN GRADED)
- 0.65' HMA (TYPE A)
- 0.70' LCB
- 1.80' CLASS 4 AS

2
- 0.55' HMA (TYPE A)
- 0.85' CLASS 3 AB
- 1.25' CLASS 4 AS

3
- 0.55' HMA (TYPE A)
- 0.95' CLASS 3 AB
- 1.50' CLASS 4 AS

4
- 0.10' HMA (TYPE A)
- Var HMA LEVELING

5
- 0.50' PCC
- 0.33' CLASS 3 AB

6
- 0.5' PCC

7
- 0.33' PCC
- 0.50' CLASS 3 AB

8
- 0.10' HMA (OPEN GRADED)
- 0.95' HMA (TYPE A)
- 0.35' CLASS 4 AS

# TYPICAL CROSS SECTIONS
NO SCALE

X-1

STATE OF CALIFORNIA - DEPARTMENT OF TRANSPORTATION
Caltrans® DESIGN

FUNCTIONAL SUPERVISOR: JONATHAN LEE
CALCULATED-DESIGNED BY: FRED WITTEBORN
CHECKED BY: JONATHAN LEE
REVISED BY: A
DATE REVISED: A

LAST REVISION 02-14-12
DATE PLOTTED => 13-SEP-2012
TIME PLOTTED => 13:25

| Dist | COUNTY | ROUTE | POST MILES TOTAL PROJECT | SHEET No. | TOTAL SHEETS |
|---|---|---|---|---|---|
| 04 | Son | 101 | 25.6/29.2 | 3 | 615 |

REGISTERED CIVIL ENGINEER 8/3/11 DATE

9-10-12
PLANS APPROVAL DATE

REGISTERED PROFESSIONAL ENGINEER Fred J. Witteborn No. 56272 Exp. 12-31-12 CIVIL STATE OF CALIFORNIA

*THE STATE OF CALIFORNIA OR ITS OFFICERS OR AGENTS SHALL NOT BE RESPONSIBLE FOR THE ACCURACY OR COMPLETENESS OF SCANNED COPIES OF THIS PLAN SHEET.*

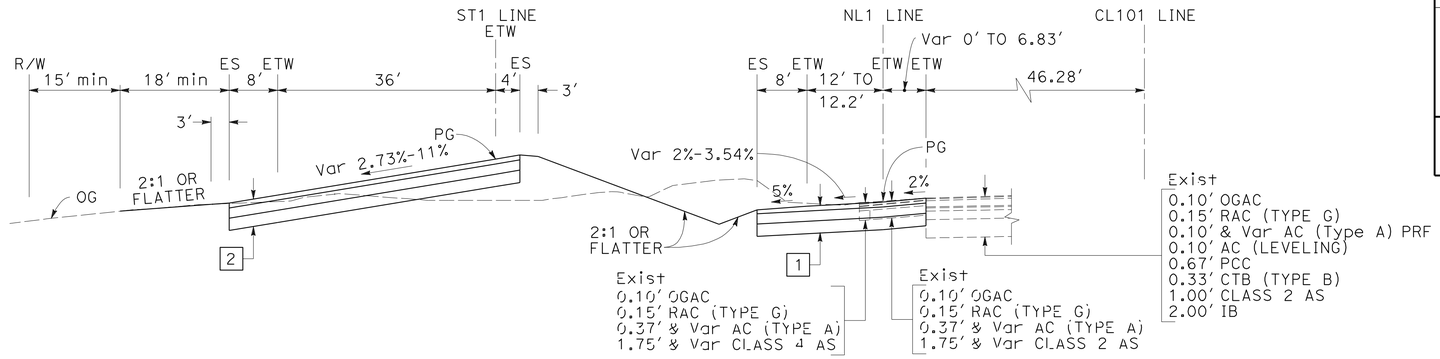


ST1 64+82.55 TO 68+00
**ST1 LINE**

NL1 64+81.04 TO 68+13.84
**NL1 LINE**

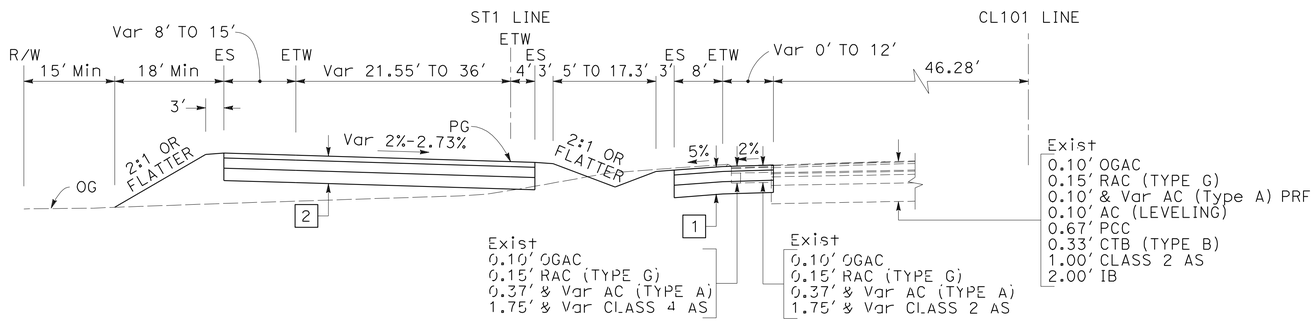


ST1 58+81.35 TO 64+82.55
**ST1 LINE**

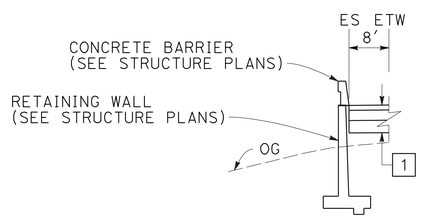


ST1 57+85.04 EB TO 58+33.35

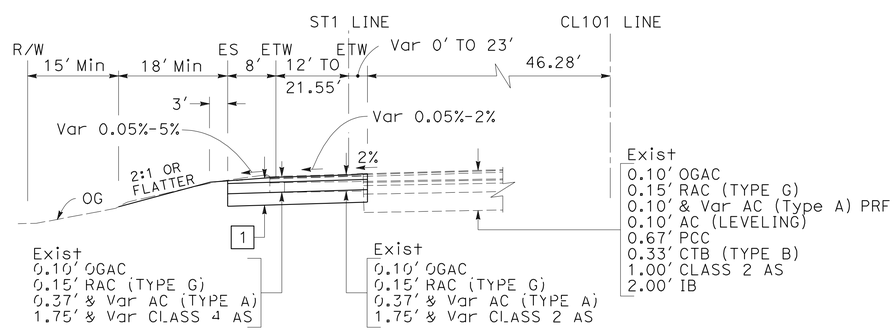


ST1 52+95.37 TO 56+30.82 BB
ST1 57+82.15 EB TO 58+35
**ST1 LINE**

FOR NOTES, ABBREVIATIONS AND LEGEND, SEE SHEET X-1

# TYPICAL CROSS SECTIONS
NO SCALE

**X-2**

| | | |
|---|---|---|
| REVISED BY | A | A |
| DATE REVISED | | |
| FRED WITTEBORN | JONATHAN LEE | |
| CALCULATED-DESIGNED BY | | |
| CHECKED BY | | |
| FUNCTIONAL SUPERVISOR | JONATHAN LEE | |

STATE OF CALIFORNIA - DEPARTMENT OF TRANSPORTATION
Caltrans
DESIGN

LAST REVISION 06-09-11
DATE PLOTTED => 13-SEP-2012
TIME PLOTTED => 13:26

| Dist | COUNTY | ROUTE | POST MILES TOTAL PROJECT | SHEET No. | TOTAL SHEETS |
|---|---|---|---|---|---|
| 04 | Son | 101 | 25.6/29.2 | 4 | 615 |

REGISTERED CIVIL ENGINEER 8/3/11 DATE

9-10-12
PLANS APPROVAL DATE

REGISTERED PROFESSIONAL ENGINEER Fred J. Witteborn No. 56272 Exp. 12-31-12 CIVIL STATE OF CALIFORNIA

*THE STATE OF CALIFORNIA OR ITS OFFICERS OR AGENTS SHALL NOT BE RESPONSIBLE FOR THE ACCURACY OR COMPLETENESS OF SCANNED COPIES OF THIS PLAN SHEET.*

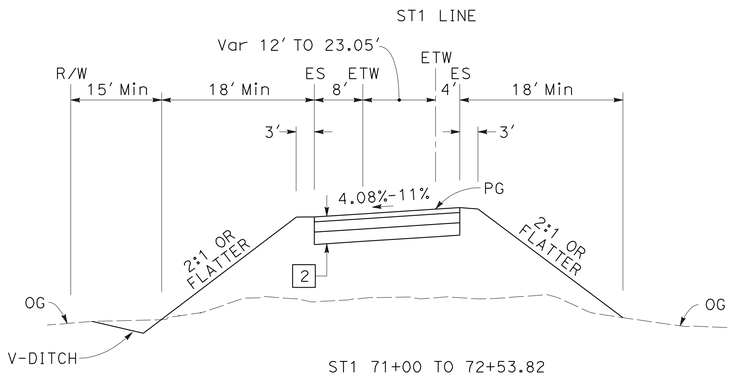


ST1 71+00 TO 72+53.82
**ST1 LINE**

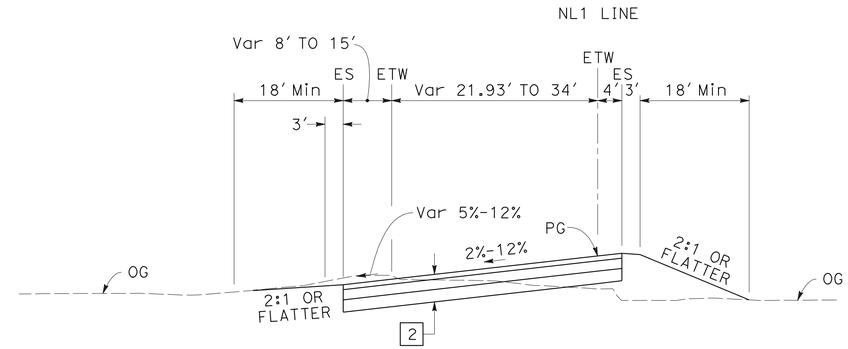


NL1 70+67.02 TO 76+69.54
**NL1 LINE**

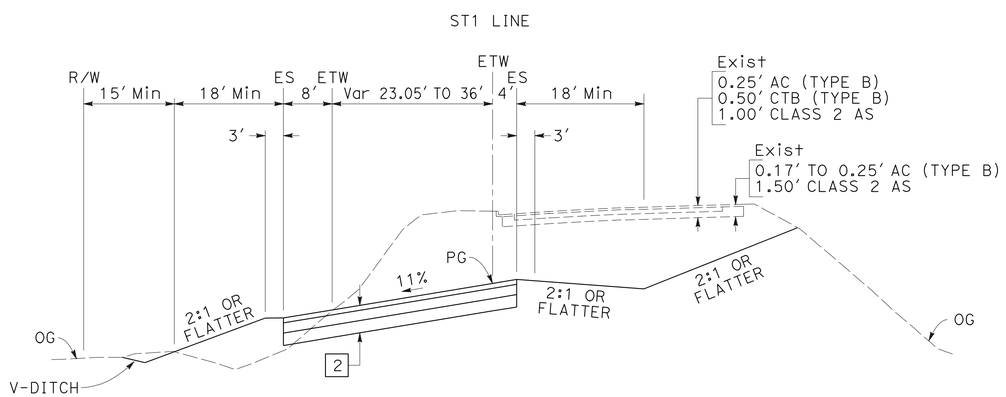


ST1 68+00 TO 71+00
**ST1 LINE**

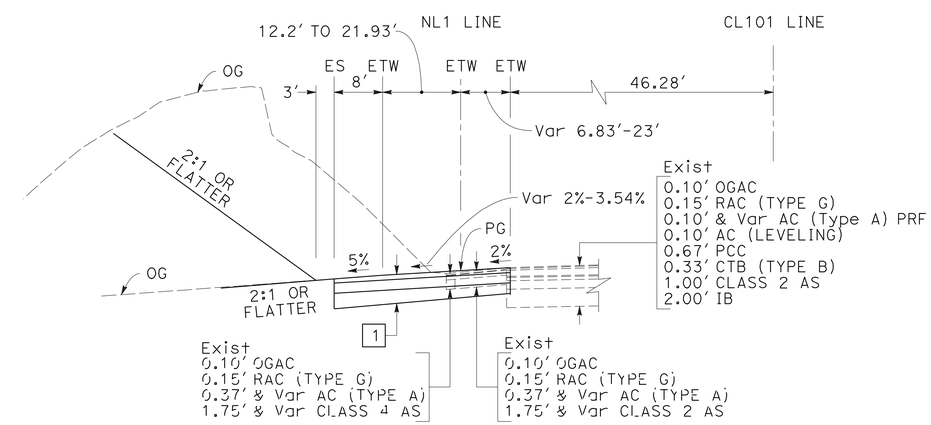


NL1 68+13.84 TO 70+67.02
**NL1 LINE**

# TYPICAL CROSS SECTIONS
NO SCALE

FOR NOTES, ABBREVIATIONS AND LEGEND, SEE SHEET X-1

**X-3**

| REVISED BY | DATE REVISED | CALCULATED-DESIGNED BY | CHECKED BY | FUNCTIONAL SUPERVISOR |
|---|---|---|---|---|
| A | A | FRED WITTEBORN | JONATHAN LEE | JONATHAN LEE |

STATE OF CALIFORNIA - DEPARTMENT OF TRANSPORTATION
Caltrans®
DESIGN

LAST REVISION 11-21-11
DATE PLOTTED => 13-SEP-2012
TIME PLOTTED => 13:26

| Dist | COUNTY | ROUTE | POST MILES TOTAL PROJECT | SHEET No. | TOTAL SHEETS |
|---|---|---|---|---|---|
| 04 | Son | 101 | 25.6/29.2 | 5 | 615 |

REGISTERED CIVIL ENGINEER 8/3/11 DATE

9-10-12
PLANS APPROVAL DATE

REGISTERED PROFESSIONAL ENGINEER Fred J. Witteborn No. 56272 Exp. 12-31-12 CIVIL STATE OF CALIFORNIA

*THE STATE OF CALIFORNIA OR ITS OFFICERS OR AGENTS SHALL NOT BE RESPONSIBLE FOR THE ACCURACY OR COMPLETENESS OF SCANNED COPIES OF THIS PLAN SHEET.*

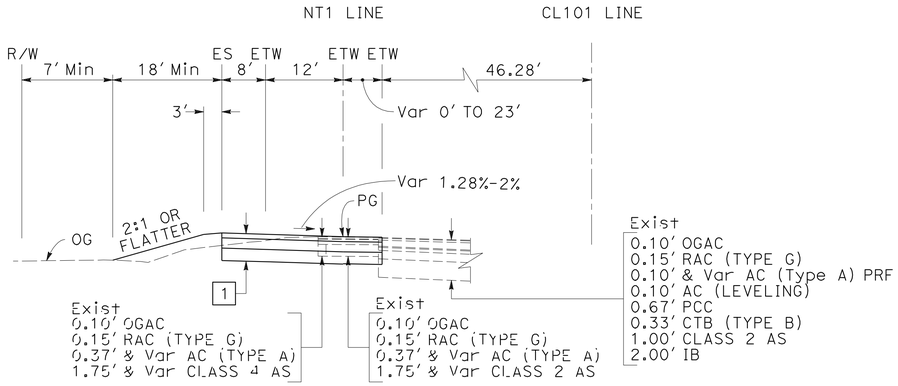


NT1 82+54.39 TO 85+25.81
**NT1 LINE**

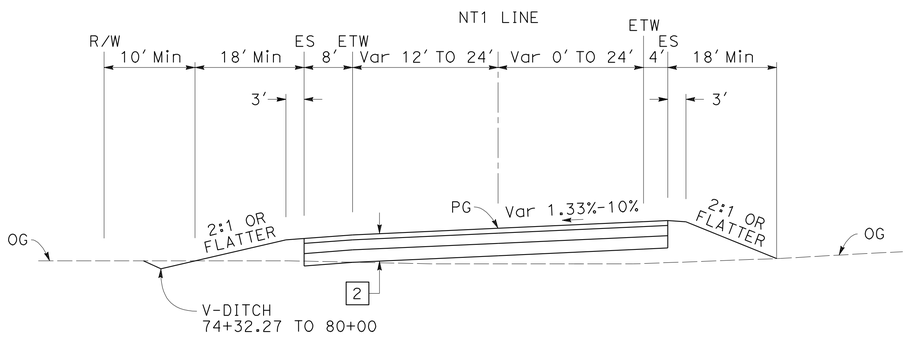


NT1 74+32.27 TO 82+54.39
**NT1 LINE**

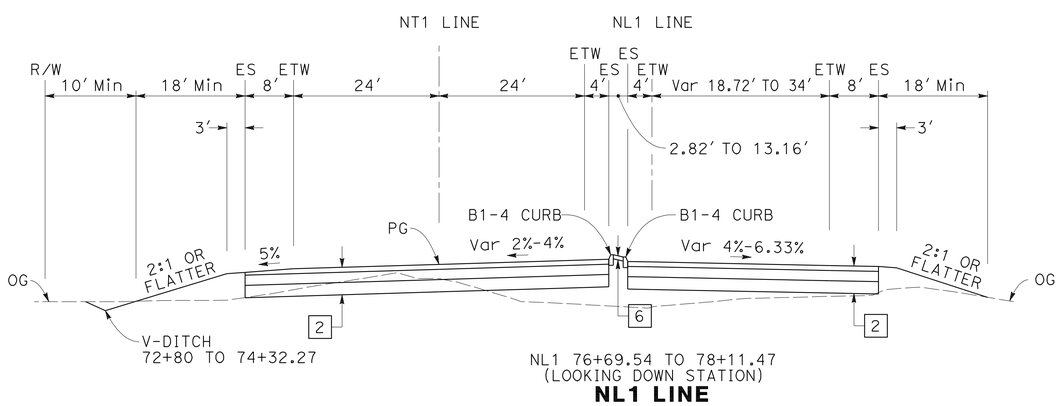


NL1 76+69.54 TO 78+11.47
(LOOKING DOWN STATION)
**NL1 LINE**

NT1 72+67.85 TO 74+32.27
**NT1 LINE**

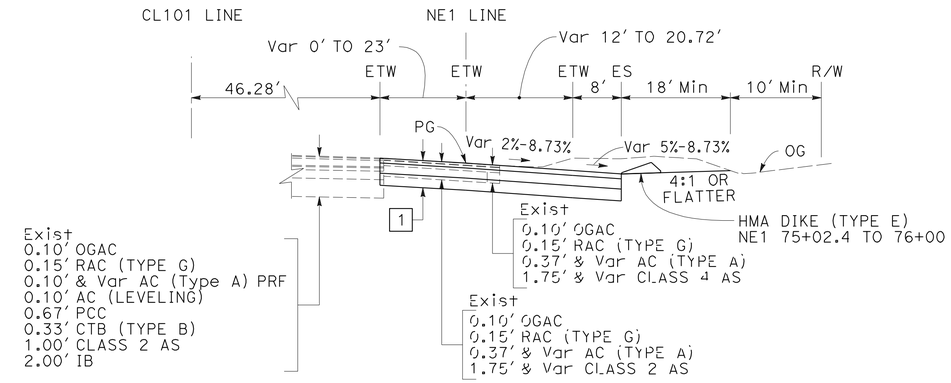


NE1 75+02.4 TO 80+69.43
**NE1 LINE**

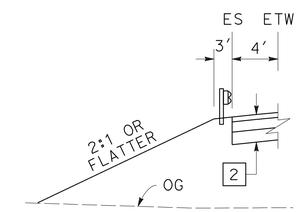


NE1 62+77.5 TO 67+50

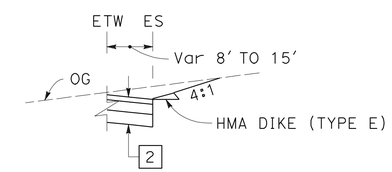


NE1 68+50 TO 75+02.4

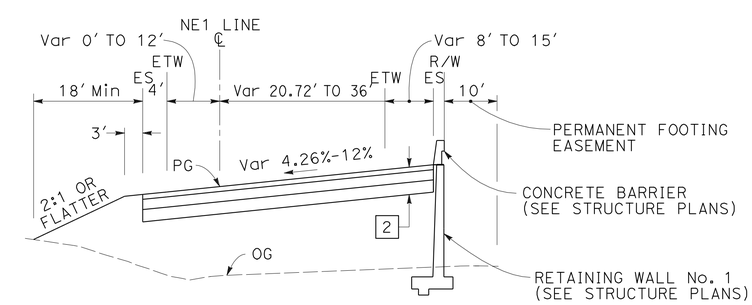


NE1 62+75.55 TO 75+02.4
**NE1 LINE**

FOR NOTES, ABBREVIATIONS AND LEGEND, SEE SHEET X-1

# TYPICAL CROSS SECTIONS
NO SCALE

**X-4**

STATE OF CALIFORNIA - DEPARTMENT OF TRANSPORTATION
**DESIGN**
Caltrans

FUNCTIONAL SUPERVISOR: JONATHAN LEE
CALCULATED-DESIGNED BY: FRED WITTEBORN
CHECKED BY: JONATHAN LEE
REVISED BY: A
DATE REVISED: A

LAST REVISION 11-21-11
DATE PLOTTED => 13-SEP-2012
TIME PLOTTED => 13:26

| Dist | COUNTY | ROUTE | POST MILES TOTAL PROJECT | SHEET No. | TOTAL SHEETS |
|---|---|---|---|---|---|
| 04 | Son | 101 | 25.6/29.2 | 6 | 615 |

REGISTERED CIVIL ENGINEER 8/3/11 DATE

9-10-12
PLANS APPROVAL DATE

REGISTERED PROFESSIONAL ENGINEER Fred J. Witteborn No. 56272 Exp. 12-31-12 CIVIL STATE OF CALIFORNIA

*THE STATE OF CALIFORNIA OR ITS OFFICERS OR AGENTS SHALL NOT BE RESPONSIBLE FOR THE ACCURACY OR COMPLETENESS OF SCANNED COPIES OF THIS PLAN SHEET.*

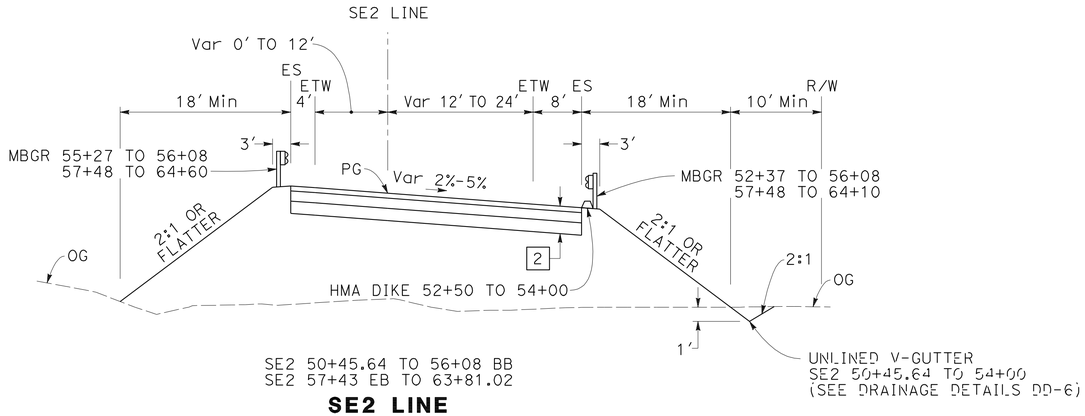


SE2 50+45.64 TO 56+08 BB
SE2 57+43 EB TO 63+81.02

**SE2 LINE**

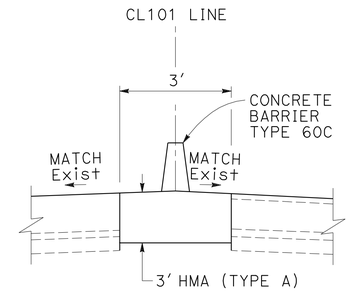


CL101 67+18.4 TO 68+70

**CL101 LINE**

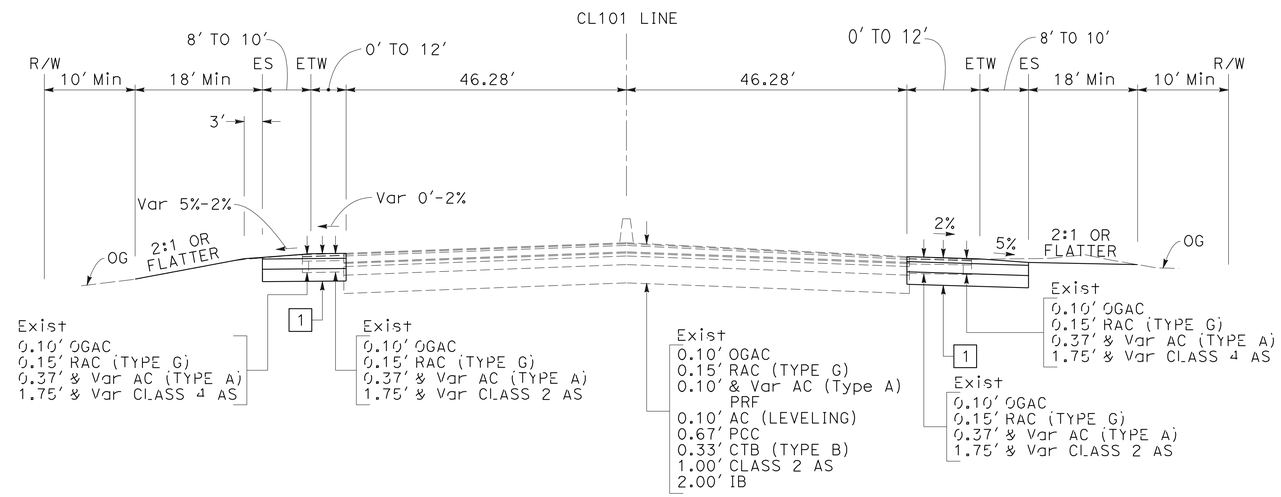


CL101 46+95.25 TO 52+95.37
CL101 85+25.81 TO 86+74.9
SOUTHBOUND

**CL101 LINE**

CL101 46+33.61 TO 47+75
CL101 80+69.43 TO 86+73.26
NORTHBOUND

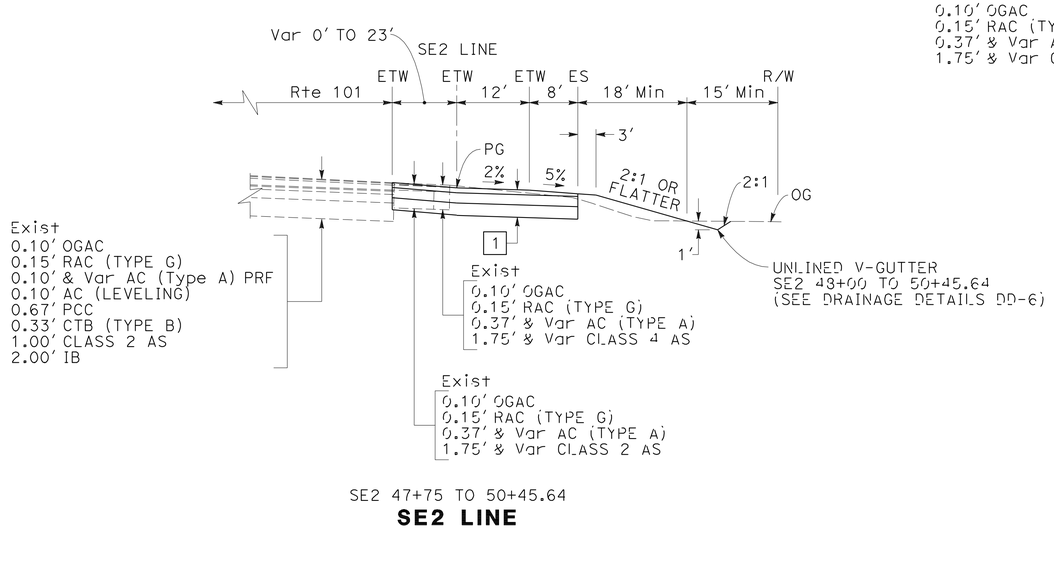


SE2 47+75 TO 50+45.64

**SE2 LINE**

# TYPICAL CROSS SECTIONS

NO SCALE

FOR NOTES, ABBREVIATIONS AND LEGEND, SEE SHEET X-1

**X-5**

| REVISED BY | DATE REVISED |
|---|---|
| A | A |

FRED WITTEBORN — JONATHAN LEE — CALCULATED-DESIGNED BY — CHECKED BY

FUNCTIONAL SUPERVISOR: JONATHAN LEE

STATE OF CALIFORNIA - DEPARTMENT OF TRANSPORTATION — DESIGN — Caltrans

LAST REVISION 11-21-11 — DATE PLOTTED => 13-SEP-2012 — TIME PLOTTED => 13:26

| Dist | COUNTY | ROUTE | POST MILES TOTAL PROJECT | SHEET No. | TOTAL SHEETS |
|---|---|---|---|---|---|
| 04 | Son | 101 | 25.6/29.2 | 7 | 615 |

REGISTERED CIVIL ENGINEER 8/3/11 DATE

9-10-12
PLANS APPROVAL DATE

REGISTERED PROFESSIONAL ENGINEER Fred J. Witteborn No. 56272 Exp. 12-31-12 CIVIL STATE OF CALIFORNIA

*THE STATE OF CALIFORNIA OR ITS OFFICERS OR AGENTS SHALL NOT BE RESPONSIBLE FOR THE ACCURACY OR COMPLETENESS OF SCANNED COPIES OF THIS PLAN SHEET.*

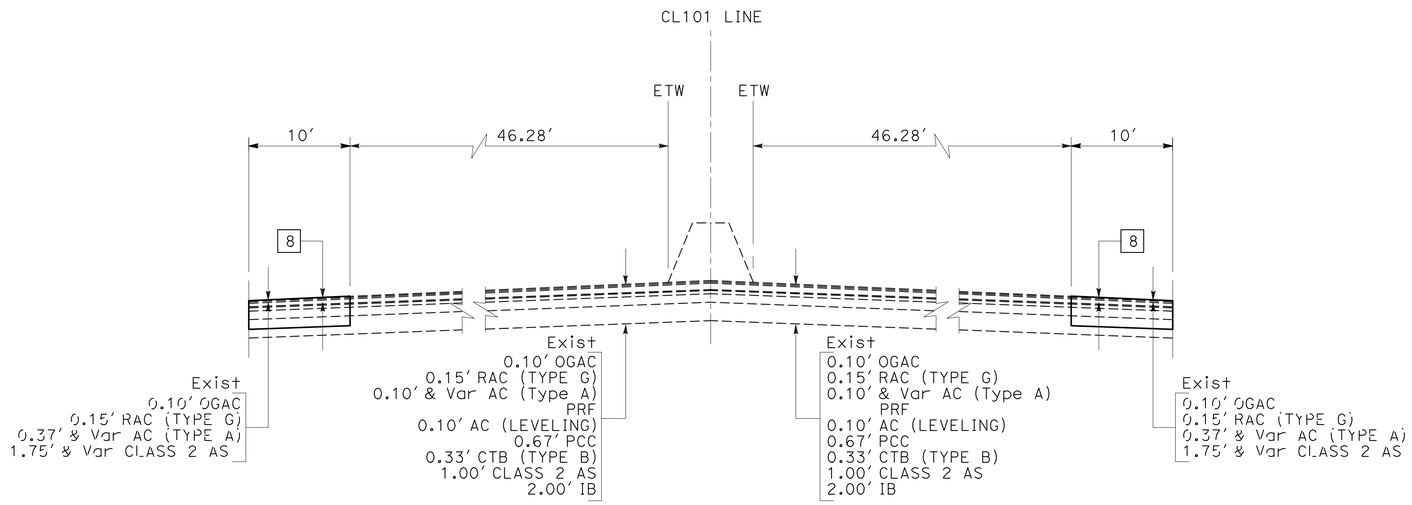


CL101 70+66.70 TO 78+00

**SOUTHBOUND**

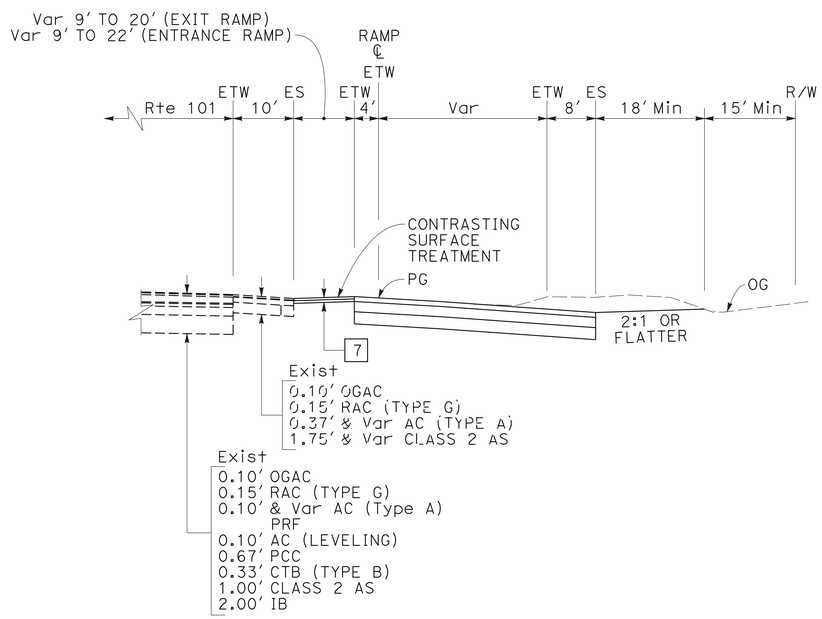


**EXIT AND ENTRANCE RAMPS CONTRASTING SURFACE TREATMENT DETAILS**

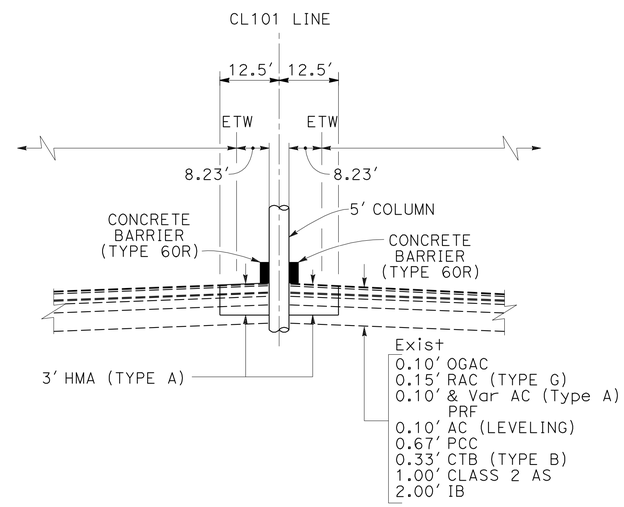


CL101 68+93.48 TO 70+00.26

**CL101 LINE**

FOR NOTES, ABBREVIATIONS AND LEGEND, SEE SHEET X-1

# TYPICAL CROSS SECTIONS

NO SCALE

**X-6**

| REVISED BY | DATE REVISED |
|---|---|
| A | A |

FRED WITTEBORN — JONATHAN LEE — CALCULATED-DESIGNED BY — CHECKED BY

FUNCTIONAL SUPERVISOR: JONATHAN LEE

STATE OF CALIFORNIA - DEPARTMENT OF TRANSPORTATION — Caltrans — DESIGN

LAST REVISION 07-29-11 — DATE PLOTTED => 13-SEP-2012 — TIME PLOTTED => 13:26

| Dist | COUNTY | ROUTE | POST MILES TOTAL PROJECT | SHEET No. | TOTAL SHEETS |
|---|---|---|---|---|---|
| 04 | Son | 101 | 25.6/29.2 | 8 | 615 |

REGISTERED CIVIL ENGINEER 8/3/11 DATE

9-10-12
PLANS APPROVAL DATE

REGISTERED PROFESSIONAL ENGINEER
Fred J. Witteborn
No. 56272
Exp. 12-31-12
CIVIL
STATE OF CALIFORNIA

*THE STATE OF CALIFORNIA OR ITS OFFICERS OR AGENTS SHALL NOT BE RESPONSIBLE FOR THE ACCURACY OR COMPLETENESS OF SCANNED COPIES OF THIS PLAN SHEET.*

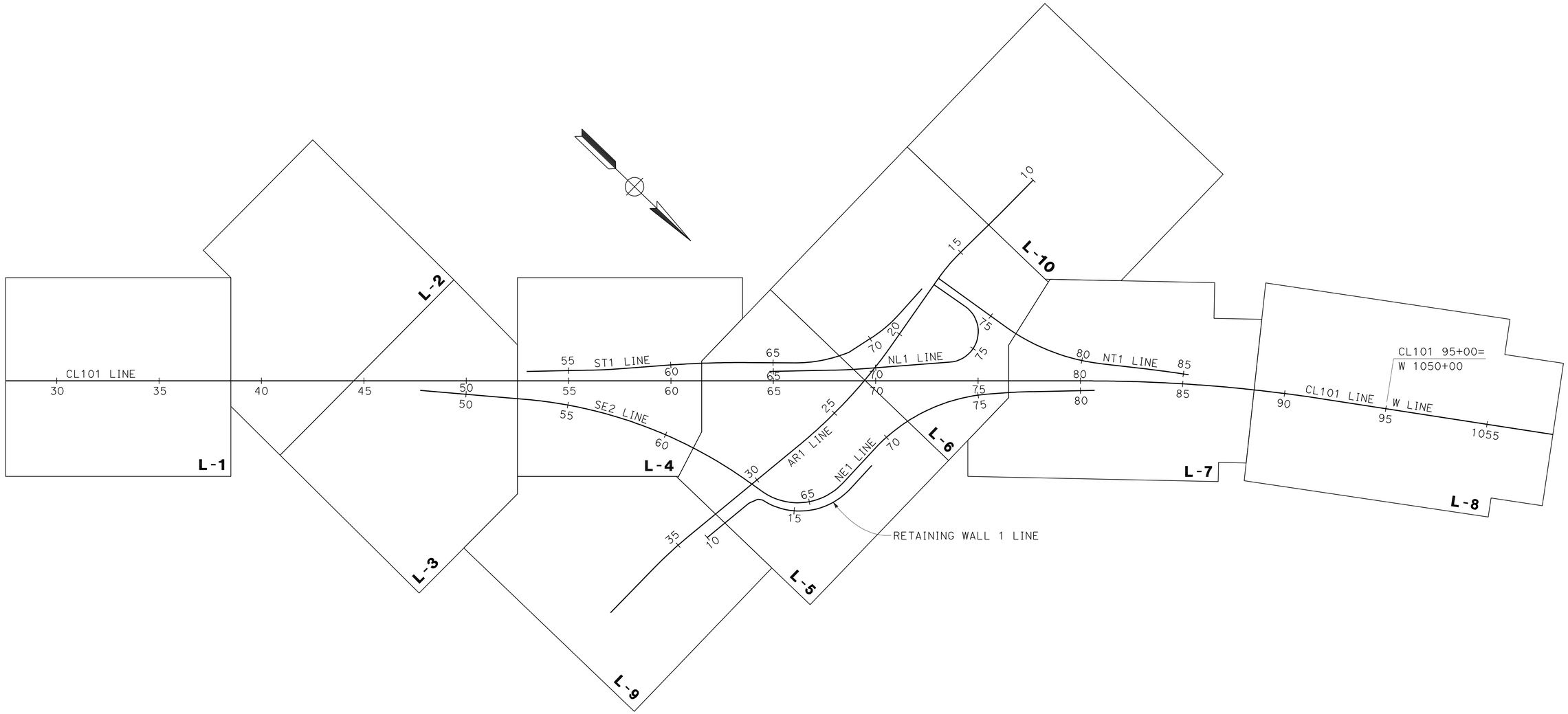


# KEY MAP AND LINE INDEX

NO SCALE

K-1

| | |
|---|---|
| REVISED BY | A |
| DATE REVISED | A |
| FRED WITTEBORN | |
| JONATHAN LEE | |
| CALCULATED-DESIGNED BY | |
| CHECKED BY | |
| FUNCTIONAL SUPERVISOR | |
| JONATHAN LEE | |

STATE OF CALIFORNIA - DEPARTMENT OF TRANSPORTATION

Caltrans®

DESIGN

LAST REVISION 12-08-11 | DATE PLOTTED => 13-SEP-2012 | TIME PLOTTED => 13:26

| Dist | COUNTY | ROUTE | POST MILES TOTAL PROJECT | SHEET No. | TOTAL SHEETS |
|---|---|---|---|---|---|
| 04 | Son | 101 | 25.6/29.2 | 9 | 615 |

George A. Acquaye 8/3/11
REGISTERED CIVIL ENGINEER DATE

9-10-12
PLANS APPROVAL DATE

REGISTERED PROFESSIONAL ENGINEER
George A. Acquaye
No. 53859
Exp. 12-31-13
CIVIL
STATE OF CALIFORNIA

*THE STATE OF CALIFORNIA OR ITS OFFICERS OR AGENTS SHALL NOT BE RESPONSIBLE FOR THE ACCURACY OR COMPLETENESS OF SCANNED COPIES OF THIS PLAN SHEET.*

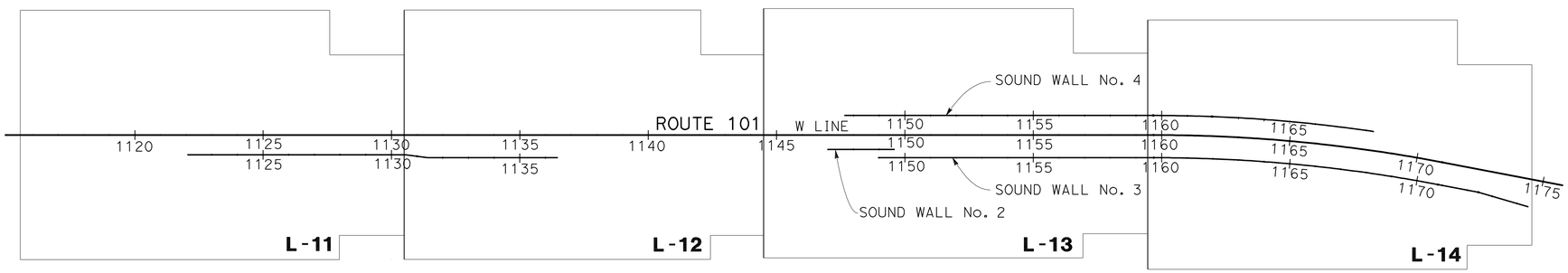


# KEY MAP AND LINE INDEX

NO SCALE

K-2

| | |
|---|---|
| REVISED BY | |
| DATE REVISED | |
| CALCULATED-DESIGNED BY | AARON C. WANG |
| CHECKED BY | GEORGE A. ACQUAYE |
| FUNCTIONAL SUPERVISOR | SOTERO D. ANGELES |

STATE OF CALIFORNIA - DEPARTMENT OF TRANSPORTATION
Caltrans®
DESIGN

LAST REVISION 08-01-11
DATE PLOTTED => 13-SEP-2012
TIME PLOTTED => 13:26

| Dist | COUNTY | ROUTE | POST MILES TOTAL PROJECT | SHEET No. | TOTAL SHEETS |
|---|---|---|---|---|---|
| 04 | Son | 101 | 25.6/29.2 | 10 | 615 |

REGISTERED CIVIL ENGINEER 8/3/11 DATE

9-10-12
PLANS APPROVAL DATE

REGISTERED PROFESSIONAL ENGINEER Fred J. Witteborn No. 56272 Exp. 12-31-12 CIVIL STATE OF CALIFORNIA

*THE STATE OF CALIFORNIA OR ITS OFFICERS OR AGENTS SHALL NOT BE RESPONSIBLE FOR THE ACCURACY OR COMPLETENESS OF SCANNED COPIES OF THIS PLAN SHEET.*

## NOTES:

1. FOR ACCURATE RIGHT OF WAY DATA, CONTACT RIGHT OF WAY ENGINEERING AT THE DISTRICT OFFICE.
2. FOR LIMITS OF REMOVE ITEMS, SEE SUMMARY OF QUANTITIES SHEETS.
3. FOR TUBULAR HAND RAILING DETAILS, SEE Std PLAN B11-51.
4. FOR CONCRETE BARRIER (TYPE K) DETAILS, SEE Std PLAN T3.
5. ADDITIONAL AREA FOR CLEARING AND GRUBBING, AS SHOWN ON THESE PLANS, ARE AVAILABLE FOR THE EXCLUSIVE USE OF THE CONTRACTOR.

"COORDINATE VALUES SHOWN ARE CCS 83 ZONE 2 ".

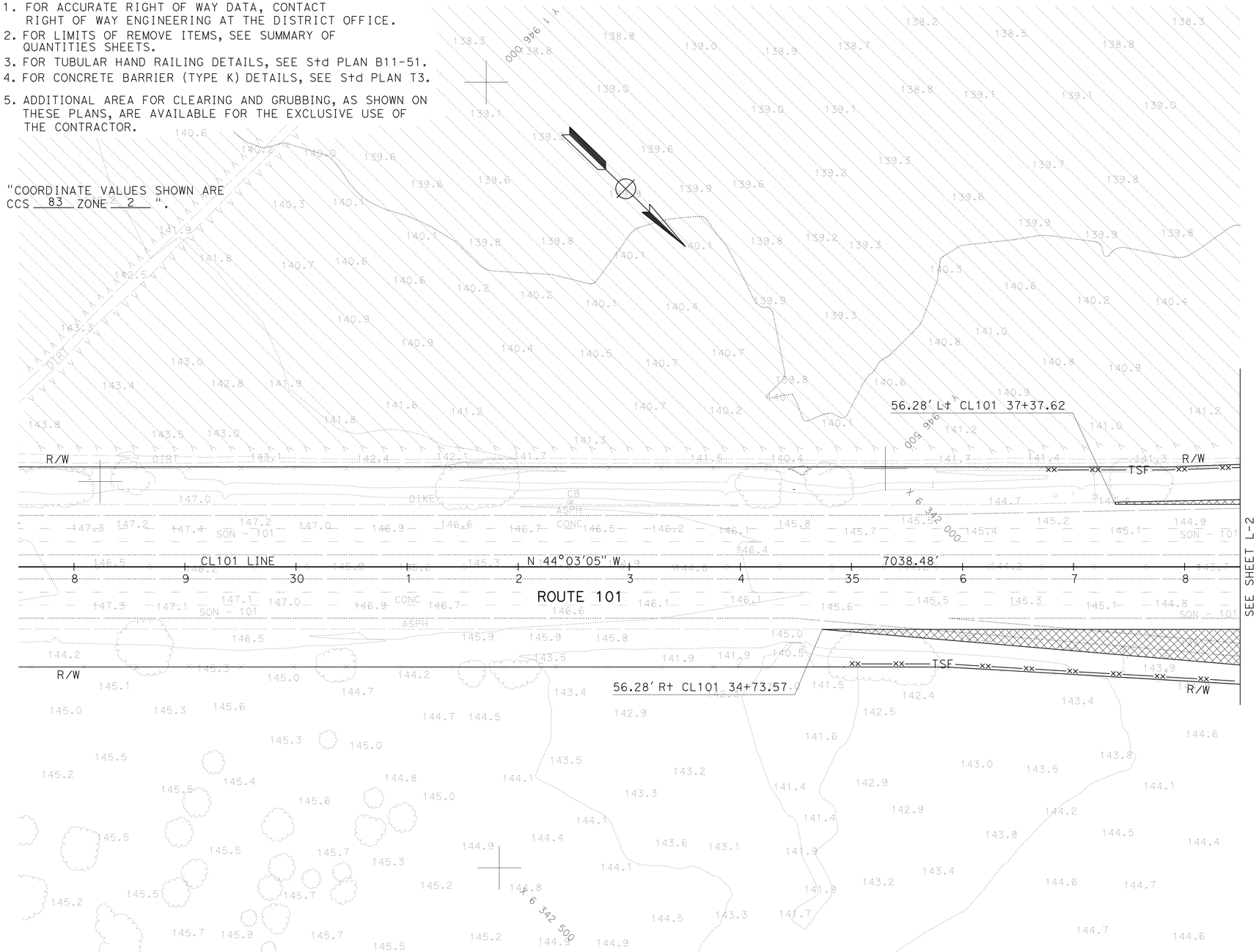


## LEGEND:

- HMA OVERLAY
- STRUCTURAL SECTION
- CURVE DATA
- CONTRAST SURFACE TREATMENT
- REMOVE BASE AND SURFACING
- COLD PLANE AC PAVEMENT
- ADDITIONAL AREA FOR CLEARING AND GRUBBING
- W — IRRIGATION CROSSOVER
- TFESA — TEMPORARY FENCE (TYPE ESA)
- —xx—TSF—xx— TEMPORARY SILT FENCE
- xx—TRSF—xx TEMPORARY REINFORCED SILT FENCE

## ABBREVIATIONS:

| | |
|---|---|
| AFTS | ALTERNATIVE FLARED TERMINAL SYSTEM |
| AITS | ALTERNATIVE IN-LINE TERMINAL SYSTEM |
| EAA | END ANCHOR ASSEMBLY |
| ESA | ENVIRONMENTALLY SENSITIVE AREA |
| TCE | TEMPORARY CONSTRUCTION EASEMENT |

# LAYOUT

SCALE: 1" = 50'

L-1

| REVISED BY | DATE REVISED |
|---|---|
| A | A |

FRED WITTEBORN — CALCULATED-DESIGNED BY
JONATHAN LEE — CHECKED BY
JONATHAN LEE — FUNCTIONAL SUPERVISOR

STATE OF CALIFORNIA - DEPARTMENT OF TRANSPORTATION
Caltrans
DESIGN

LAST REVISION 12-15-11 | DATE PLOTTED => 13-SEP-2012 | TIME PLOTTED => 13:26

| Dist | COUNTY | ROUTE | POST MILES TOTAL PROJECT | SHEET No. | TOTAL SHEETS |
|---|---|---|---|---|---|
| 04 | Son | 101 | 25.6/29.2 | 11 | 615 |

REGISTERED CIVIL ENGINEER 8/3/11 DATE

9-10-12
PLANS APPROVAL DATE

REGISTERED PROFESSIONAL ENGINEER Fred J. Witteborn No. 56272 Exp. 12-31-12 CIVIL STATE OF CALIFORNIA

*THE STATE OF CALIFORNIA OR ITS OFFICERS OR AGENTS SHALL NOT BE RESPONSIBLE FOR THE ACCURACY OR COMPLETENESS OF SCANNED COPIES OF THIS PLAN SHEET.*

**NOTE:**

FOR ACCURATE RIGHT OF WAY DATA, CONTACT RIGHT OF WAY ENGINEERING AT THE DISTRICT OFFICE.

FOR NOTES, ABBREVIATIONS AND LEGEND, SEE SHEET L-1

**LAYOUT**
SCALE: 1" = 50'

**L-2**

| | | | |
|---|---|---|---|
| STATE OF CALIFORNIA - DEPARTMENT OF TRANSPORTATION | FRED WITTEBORN | REVISED BY | A |
| Caltrans | JONATHAN LEE | DATE REVISED | A |
| DESIGN | FUNCTIONAL SUPERVISOR: JONATHAN LEE | CALCULATED-DESIGNED BY | |
| | | CHECKED BY | |

LAST REVISION 02-14-12 DATE PLOTTED => 13-SEP-2012 TIME PLOTTED => 13:26

| Dist | COUNTY | ROUTE | POST MILES TOTAL PROJECT | SHEET No. | TOTAL SHEETS |
|---|---|---|---|---|---|
| 04 | Son | 101 | 25.6/29.2 | 12 | 615 |

REGISTERED CIVIL ENGINEER 8/3/11 DATE

9-10-12
PLANS APPROVAL DATE

REGISTERED PROFESSIONAL ENGINEER Fred J. Witteborn No. 56272 Exp. 12-31-12 CIVIL STATE OF CALIFORNIA

*THE STATE OF CALIFORNIA OR ITS OFFICERS OR AGENTS SHALL NOT BE RESPONSIBLE FOR THE ACCURACY OR COMPLETENESS OF SCANNED COPIES OF THIS PLAN SHEET.*

**NOTE:**

FOR ACCURATE RIGHT OF WAY DATA, CONTACT RIGHT OF WAY ENGINEERING AT THE DISTRICT OFFICE.

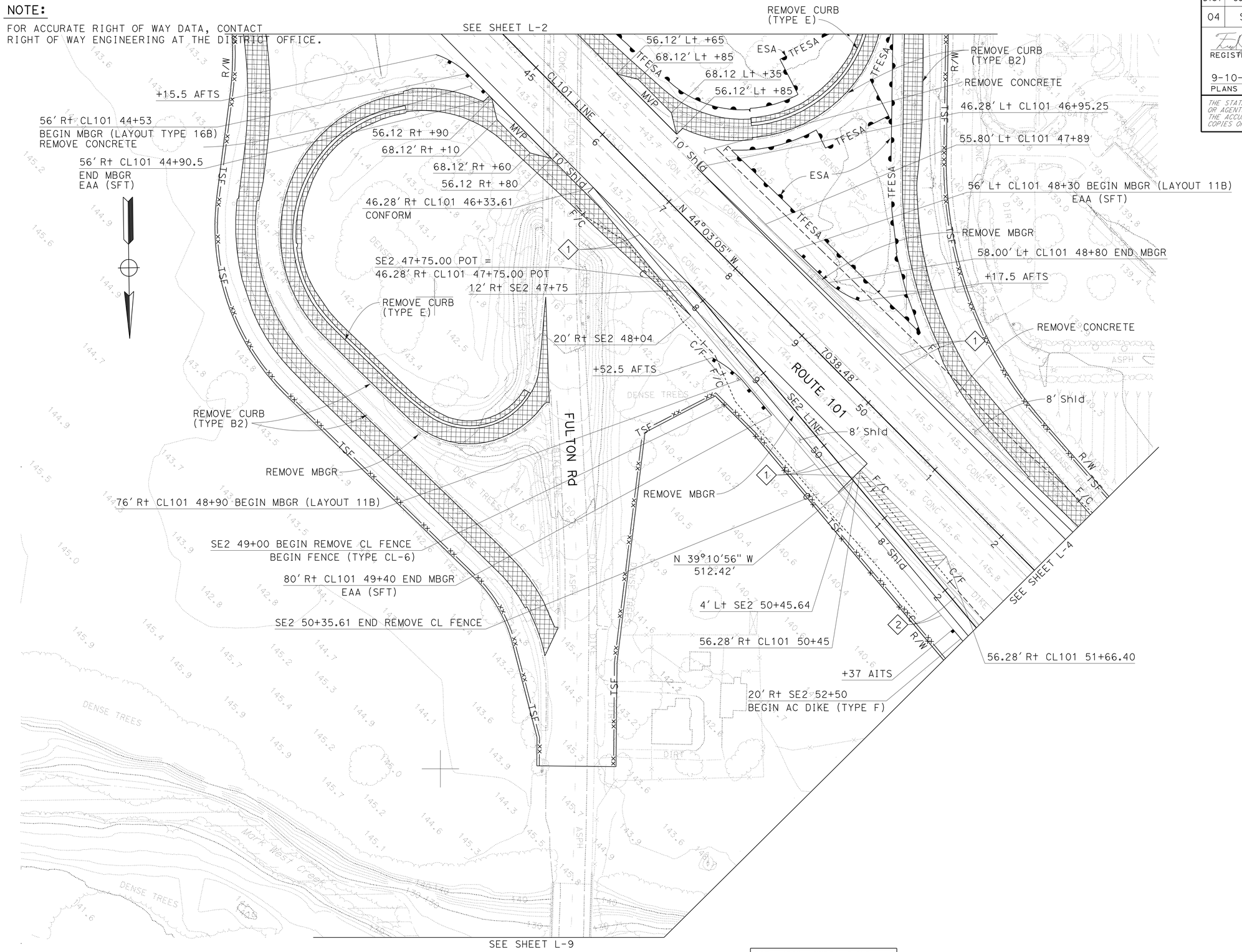


FOR NOTES, ABBREVIATIONS AND LEGEND, SEE SHEET L-1

# LAYOUT

SCALE: 1" = 50'

**L-3**

STATE OF CALIFORNIA - DEPARTMENT OF TRANSPORTATION

Caltrans

DESIGN

FUNCTIONAL SUPERVISOR: JONATHAN LEE

CALCULATED-DESIGNED BY: FRED WITTEBORN

CHECKED BY: JONATHAN LEE

REVISED BY | DATE REVISED: A | A

LAST REVISION 02-14-12 | DATE PLOTTED => 13-SEP-2012 | TIME PLOTTED => 13:27

BORDER LAST REVISED 7/2/2010 | USERNAME => s119571 | DGN FILE => 0400020945ea003.dgn | RELATIVE BORDER SCALE IS IN INCHES 0 1 2 3 | UNIT 0751 | PROJECT NUMBER & PHASE 04000209451

| Dist | COUNTY | ROUTE | POST MILES TOTAL PROJECT | SHEET No. | TOTAL SHEETS |
|---|---|---|---|---|---|
| 04 | Son | 101 | 25.6/29.2 | 13 | 615 |

REGISTERED CIVIL ENGINEER 8/3/11 DATE

9-10-12
PLANS APPROVAL DATE

REGISTERED PROFESSIONAL ENGINEER Fred J. Witteborn No. 56272 Exp. 12-31-12 CIVIL STATE OF CALIFORNIA

*THE STATE OF CALIFORNIA OR ITS OFFICERS OR AGENTS SHALL NOT BE RESPONSIBLE FOR THE ACCURACY OR COMPLETENESS OF SCANNED COPIES OF THIS PLAN SHEET.*

NOTE:

FOR ACCURATE RIGHT OF WAY DATA, CONTACT RIGHT OF WAY ENGINEERING AT THE DISTRICT OFFICE.

## CURVE DATA

| No. | R | Δ | T | L | N-COORDINATE | E-COORDINATE |
|---|---|---|---|---|---|---|
| 6 | 3000.00′ | 3°11′29" | 83.57′ | 167.10′ | 1945880.61 | 6338476.40 |
| 7 | 5000.00′ | 4°44′23" | 206.92′ | 413.61′ | 1951995.40 | 6343638.74 |
| 14 | 2200.00′ | 30°37′21" | 602.32′ | 1175.82′ | 1949275.26 | 6342613.21 |
| 25 | 5024.00′ | 4°03′10" | 177.76′ | 355.38′ | 1952103.39 | 6343512.62 |
| 26 | 2988.00′ | 3°11′25" | 83.21′ | 166.37′ | 1945811.25 | 6338548.63 |

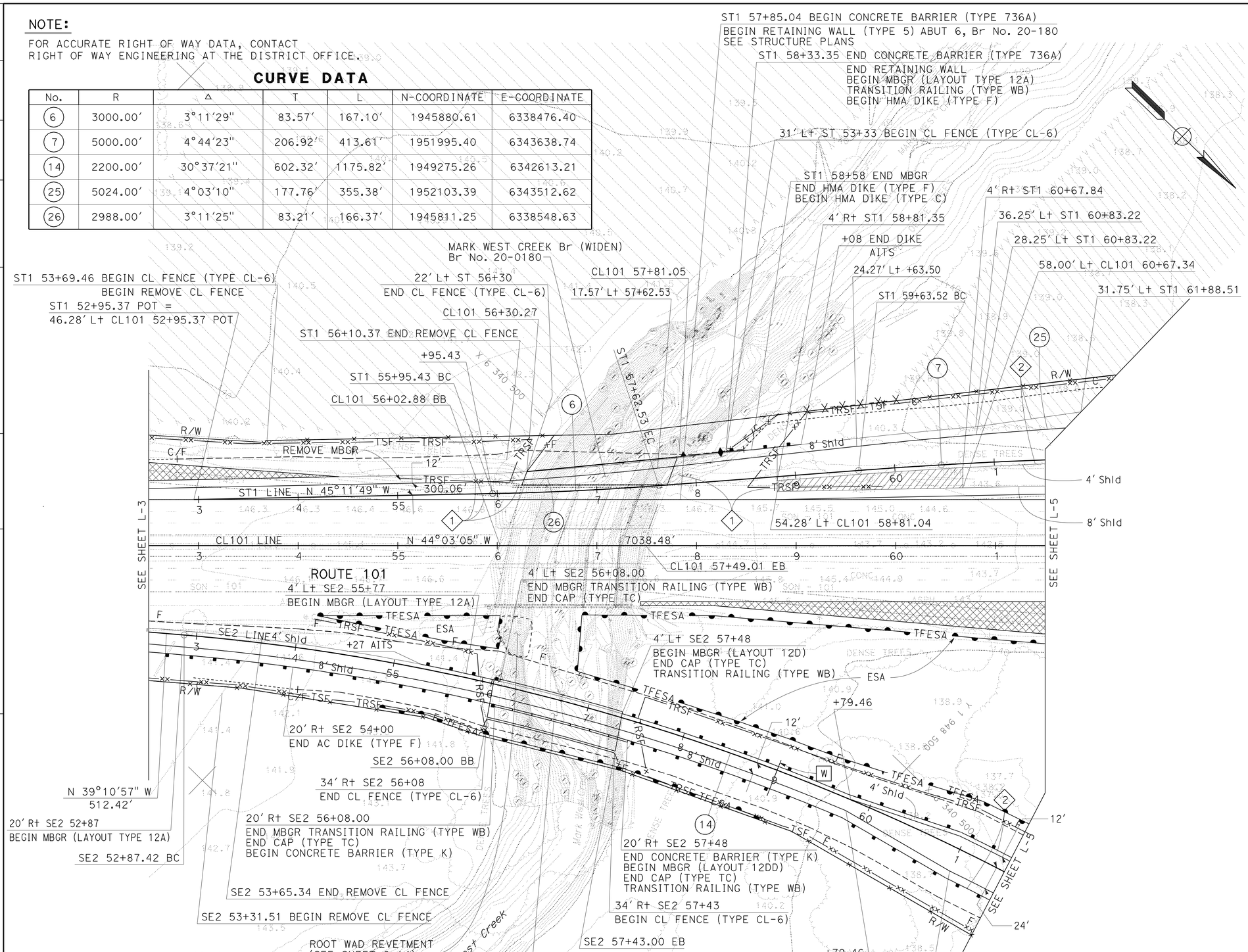


FOR NOTES, ABBREVIATIONS AND LEGEND, SEE SHEET L-1

# LAYOUT

SCALE: 1" = 50′

L-4

STATE OF CALIFORNIA - DEPARTMENT OF TRANSPORTATION

DESIGN

FUNCTIONAL SUPERVISOR: JONATHAN LEE

CALCULATED-DESIGNED BY: FRED WITTEBORN

CHECKED BY: JONATHAN LEE

REVISED BY: A

DATE REVISED: A

LAST REVISION 02-14-12 | DATE PLOTTED => 13-SEP-2012 | TIME PLOTTED => 13:27

| Dist | COUNTY | ROUTE | POST MILES TOTAL PROJECT | SHEET No. | TOTAL SHEETS |
|---|---|---|---|---|---|
| 04 | Son | 101 | 25.6/29.2 | 14 | 615 |

REGISTERED CIVIL ENGINEER 8/3/11 DATE

9-10-12
PLANS APPROVAL DATE

REGISTERED PROFESSIONAL ENGINEER Fred J. Witteborn No. 56272 Exp. 12-31-12 CIVIL STATE OF CALIFORNIA

*THE STATE OF CALIFORNIA OR ITS OFFICERS OR AGENTS SHALL NOT BE RESPONSIBLE FOR THE ACCURACY OR COMPLETENESS OF SCANNED COPIES OF THIS PLAN SHEET.*

**NOTE:**

FOR ACCURATE RIGHT OF WAY DATA, CONTACT RIGHT OF WAY ENGINEERING AT THE DISTRICT OFFICE.

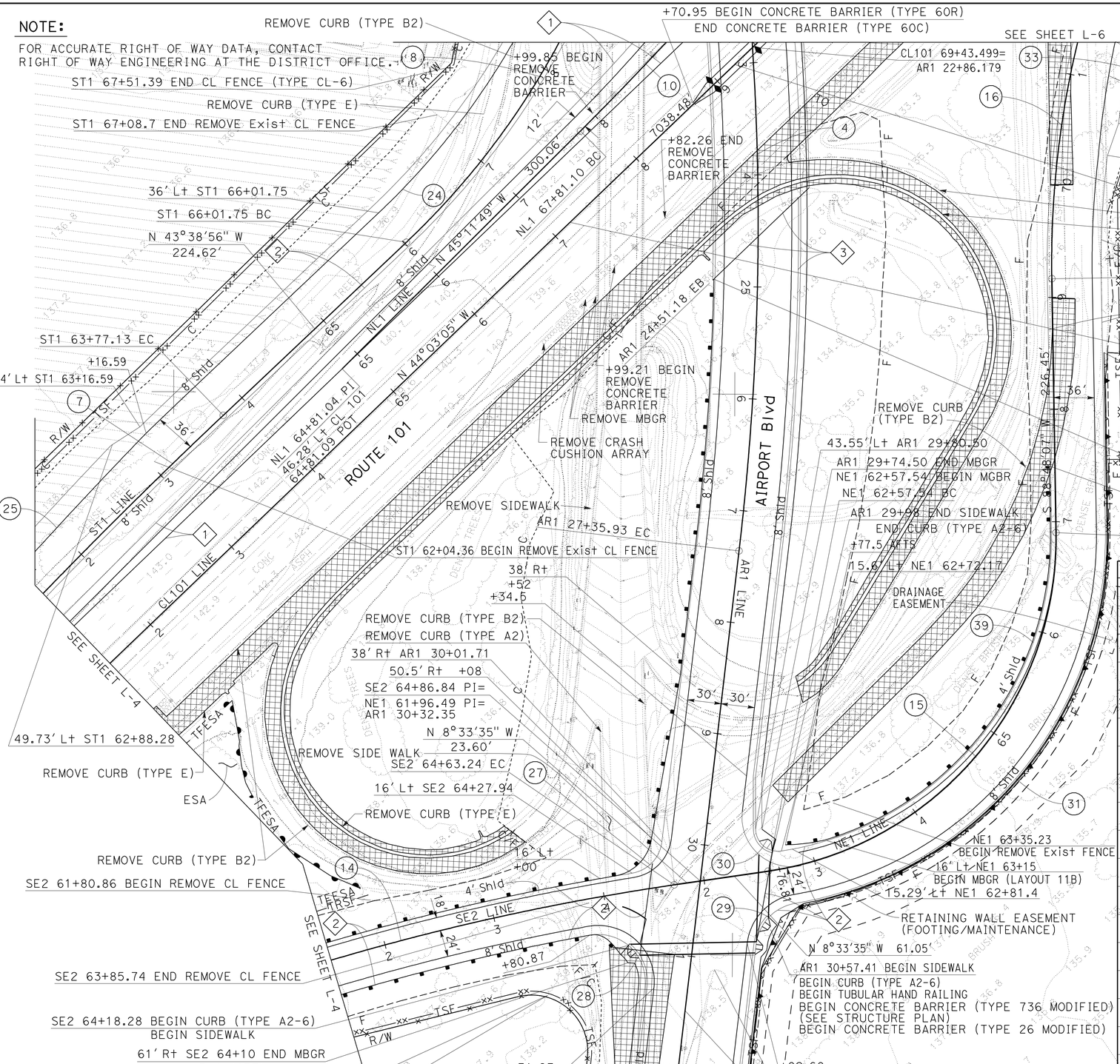


FOR NOTES, ABBREVIATIONS AND LEGEND, SEE SHEET L-1

## CURVE DATA

| No. | R | Δ | T | L | N-COORDINATE | E-COORDINATE |
|---|---|---|---|---|---|---|
| 4 | 2500.00' | 15°33'53" | 341.68' | 679.14' | 1946520.18 | 6339859.23 |
| 7 | 5000.00' | 04°44'23" | 206.92' | 413.61' | 1951995.40 | 6343638.74 |
| 8 | 700.00' | 22°39'58" | 140.29' | 276.92' | 1948223.58 | 6339359.27 |
| 9 | 688.00' | 15°56'23" | 96.32' | 191.40' | 1948223.58 | 6339359.27 |
| 10 | 3000.00' | 03°11'29" | 83.57' | 167.10' | 1946732.77 | 6337652.00 |
| 14 | 2200.00' | 30°37'21" | 602.32' | 1175.82' | 1949275.26 | 6342613.21 |
| 15 | 300.00' | 82°38'18" | 263.73' | 432.69' | 1948986.87 | 6340128.46 |
| 16 | 850.00' | 42°49'18" | 333.30' | 635.27' | 1950131.89 | 6339878.01 |
| 24 | 664.00' | 38°15'04" | 230.26' | 443.29' | 1948223.58 | 6339359.27 |
| 25 | 5024.00' | 04°03'10" | 177.76 | 355.38 | 1952103.39 | 6343512.62 |
| 27 | 32.00' | 74°04'49" | 24.15' | 41.37' | 1948905.04 | 6340395.91 |
| 28 | 42.00' | 107°08'29" | 56.91' | 78.54' | 1948880.49 | 6340524.19 |
| 29 | 42.00' | 73°41'48" | 31.48' | 54.02' | 1949062.90 | 6340495.13 |
| 30 | 20.00' | 98°35'07" | 23.25' | 34.41' | 1949040.25 | 6340387.39 |
| 31 | 332.00' | 81°25'27" | 285.69' | 471.81' | 1948998.84 | 6340126.66 |
| 32 | 806.00' | 07°46'20" | 54.75' | 109.33' | 1950131.89 | 6339878.01 |
| 33 | 801.00' | 07°08'58" | 50.06' | 100.00' | 1950137.02 | 6339850.09 |
| 39 | 284.00' | 82°10'22" | 247.63' | 407.31' | 1948998.84 | 6340126.66 |

# LAYOUT

SCALE: 1" = 50'

**L-5**

| REVISED BY | DATE REVISED |
|---|---|
| A | A |

FRED WITTEBORN — JONATHAN LEE — CALCULATED-DESIGNED BY
CHECKED BY
FUNCTIONAL SUPERVISOR — JONATHAN LEE

STATE OF CALIFORNIA - DEPARTMENT OF TRANSPORTATION
Caltrans®
DESIGN

LAST REVISION 02-14-12 | DATE PLOTTED => 13-SEP-2012 | TIME PLOTTED => 13:27

| Dist | COUNTY | ROUTE | POST MILES TOTAL PROJECT | SHEET No. | TOTAL SHEETS |
|---|---|---|---|---|---|
| 04 | Son | 101 | 25.6/29.2 | 15 | 615 |

REGISTERED CIVIL ENGINEER 8/3/11 DATE

9-10-12
PLANS APPROVAL DATE

REGISTERED PROFESSIONAL ENGINEER Fred J. Witteborn No. 56272 Exp. 12-31-12 CIVIL STATE OF CALIFORNIA

*THE STATE OF CALIFORNIA OR ITS OFFICERS OR AGENTS SHALL NOT BE RESPONSIBLE FOR THE ACCURACY OR COMPLETENESS OF SCANNED COPIES OF THIS PLAN SHEET.*

## NOTES:

1. FOR ACCURATE RIGHT OF WAY DATA, CONTACT RIGHT OF WAY ENGINEERING AT THE DISTRICT OFFICE.
2. CURVE DATA TABLE, SEE Std Sht L-10.

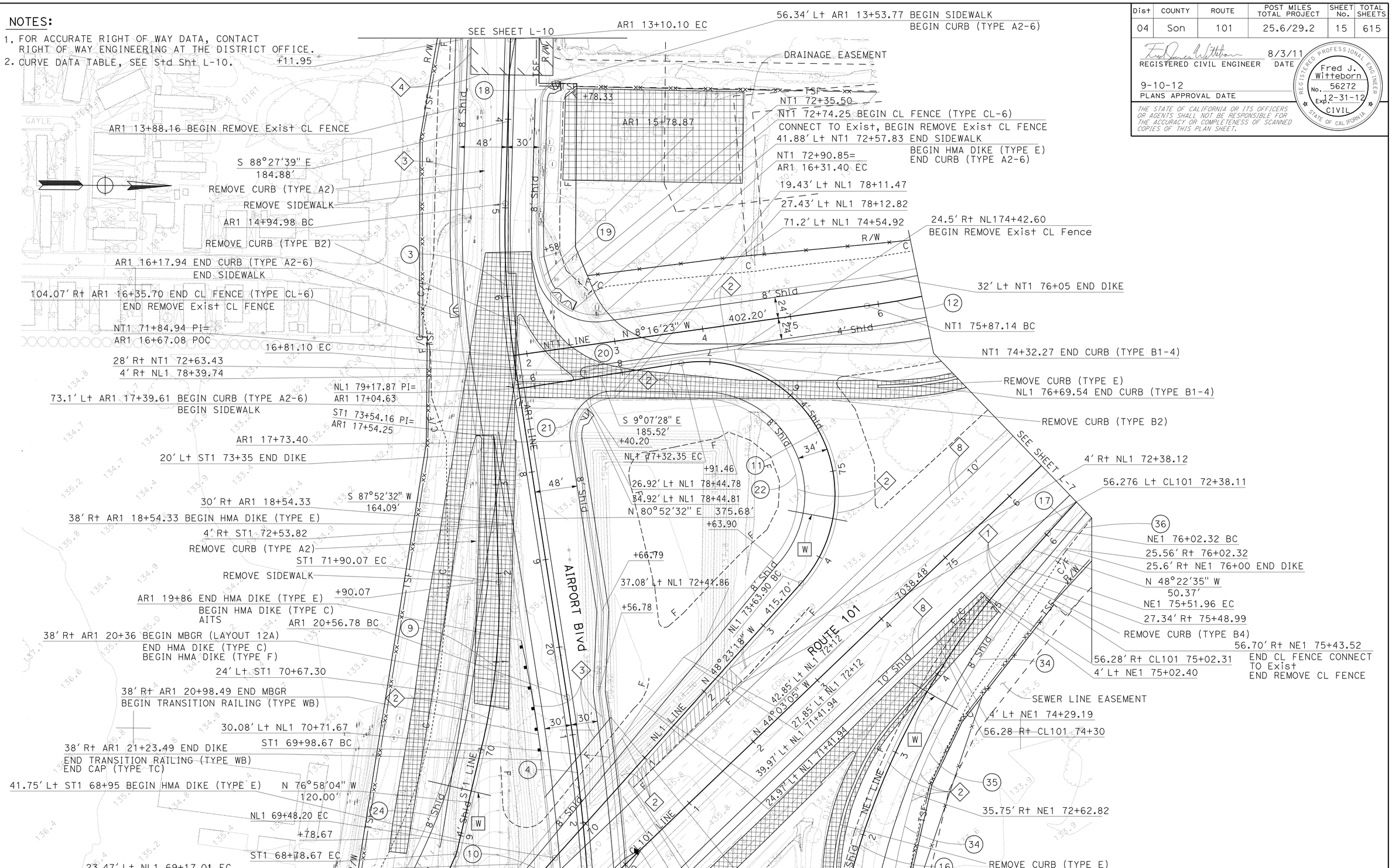


**LAYOUT**
SCALE: 1" = 50'

**L-6**

STATE OF CALIFORNIA - DEPARTMENT OF TRANSPORTATION
Caltrans
DESIGN

FUNCTIONAL SUPERVISOR: JONATHAN LEE
CALCULATED-DESIGNED BY: FRED WITTEBORN
CHECKED BY: JONATHAN LEE
REVISED BY: A
DATE REVISED: A

LAST REVISION 02-14-12
DATE PLOTTED => 13-SEP-2012
TIME PLOTTED => 13:27

| Dist | COUNTY | ROUTE | POST MILES TOTAL PROJECT | SHEET No. | TOTAL SHEETS |
|---|---|---|---|---|---|
| 04 | Son | 101 | 25.6/29.2 | 16 | 615 |

REGISTERED CIVIL ENGINEER 8/3/11 DATE

9-10-12
PLANS APPROVAL DATE

REGISTERED PROFESSIONAL ENGINEER Fred J. Witteborn No. 56272 Exp. 12-31-12 CIVIL STATE OF CALIFORNIA

*THE STATE OF CALIFORNIA OR ITS OFFICERS OR AGENTS SHALL NOT BE RESPONSIBLE FOR THE ACCURACY OR COMPLETENESS OF SCANNED COPIES OF THIS PLAN SHEET.*

NOTE:

FOR ACCURATE RIGHT OF WAY DATA, CONTACT RIGHT OF WAY ENGINEERING AT THE DISTRICT OFFICE.

## CURVE DATA

| No. | R | Δ | T | L | N-COORDINATE | E-COORDINATE |
|---|---|---|---|---|---|---|
| 1 | 7500.00′ | 8°47′00" | 576.00′ | 1149.73′ | 1955016.24 | 6344319.67 |
| 12 | 1000.00′ | 29°14′58" | 260.94′ | 510.50′ | 1949180.97 | 6338030.53 |
| 13 | 7546.28′ | 2°03′39" | 135.72′ | 271.42′ | 1954510.60 | 6344713.24 |
| 17 | 3000.00′ | 03°11′29" | 83.57′ | 167.11′ | 1951772.52 | 6341268.47 |
| 36 | 2976′ | 3°11′41" | 82.98′ | 165.92′ | 1951838.63 | 6341193.62 |
| 37 | 1000′ | 6°47′11" | 59.29′ | 118.45′ | 1949265.69 | 6337973.40 |
| 38 | 1004′ | 7°01′59" | 61.70′ | 123.24′ | 1949103.88 | 6338094.93 |

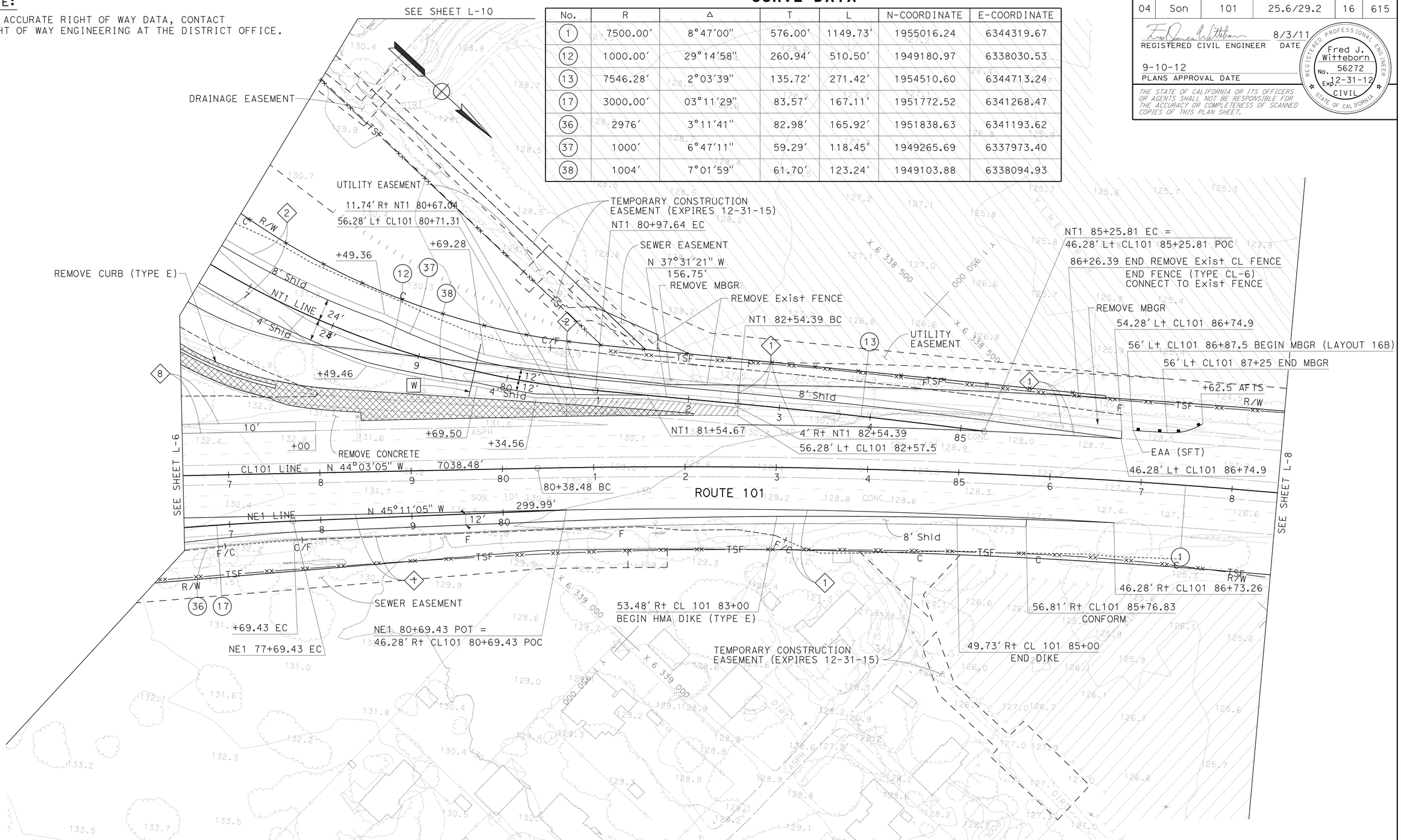


FOR NOTES, ABBREVIATIONS AND LEGEND, SEE SHEET L-1

# LAYOUT

SCALE: 1" = 50′

L-7

STATE OF CALIFORNIA - DEPARTMENT OF TRANSPORTATION

Caltrans DESIGN

FUNCTIONAL SUPERVISOR: JONATHAN LEE

CALCULATED-DESIGNED BY: FRED WITTEBORN

CHECKED BY: JONATHAN LEE

REVISED BY: A

DATE REVISED: A

LAST REVISION 02-14-12 | DATE PLOTTED => 13-SEP-2012 | TIME PLOTTED => 13:28

BORDER LAST REVISED 7/2/2010 | USERNAME => s119571 | DGN FILE => 0400020945ea007.dgn | RELATIVE BORDER SCALE IS IN INCHES 0 1 2 3 | UNIT 0751 | PROJECT NUMBER & PHASE 04000209451

| Dist | COUNTY | ROUTE | POST MILES TOTAL PROJECT | SHEET No. | TOTAL SHEETS |
|---|---|---|---|---|---|
| 04 | Son | 101 | 25.6/29.2 | 17 | 615 |

REGISTERED CIVIL ENGINEER 8/3/11 DATE

9-10-12
PLANS APPROVAL DATE

REGISTERED PROFESSIONAL ENGINEER Fred J. Witteborn No. 56272 Exp. 12-31-12 CIVIL STATE OF CALIFORNIA

*THE STATE OF CALIFORNIA OR ITS OFFICERS OR AGENTS SHALL NOT BE RESPONSIBLE FOR THE ACCURACY OR COMPLETENESS OF SCANNED COPIES OF THIS PLAN SHEET.*

NOTE:

FOR ACCURATE RIGHT OF WAY DATA, CONTACT RIGHT OF WAY ENGINEERING AT THE DISTRICT OFFICE.

## CURVE DATA

| No. | R | Δ | T | L | N-COORDINATE | E-COORDINATE |
|---|---|---|---|---|---|---|
| 1 | 7500.00′ | 8°47′00" | 576.00′ | 1149.73′ | 1955016.24 | 6344319.67 |
| | | | | | | |

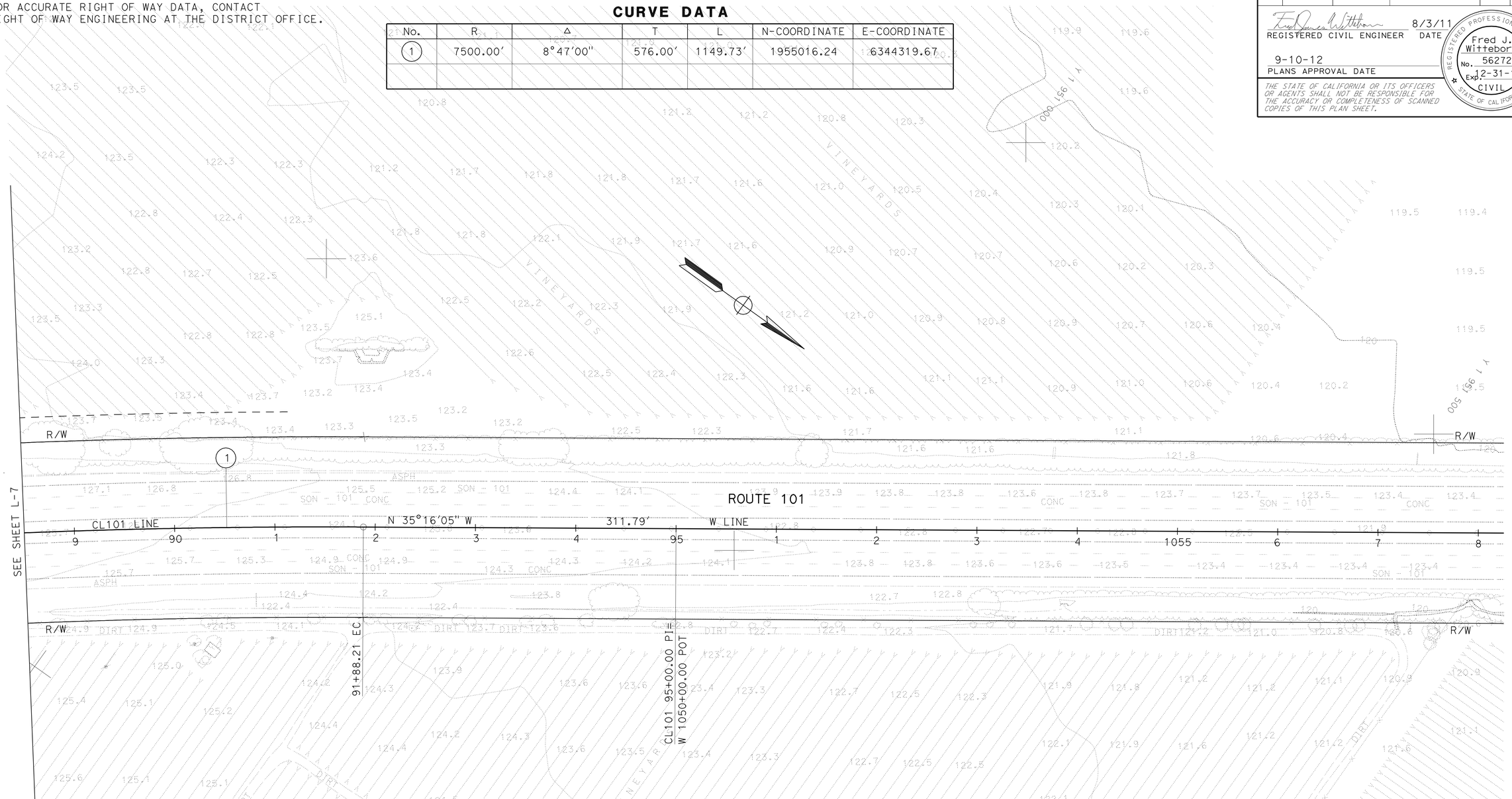


FOR NOTES, ABBREVIATIONS AND LEGEND, SEE SHEET L-1

# LAYOUT

SCALE: 1" = 50′

L-8

STATE OF CALIFORNIA - DEPARTMENT OF TRANSPORTATION

Caltrans® DESIGN

FUNCTIONAL SUPERVISOR: JONATHAN LEE

CALCULATED-DESIGNED BY: FRED WITTEBORN

CHECKED BY: JONATHAN LEE

REVISED BY: A

DATE REVISED: A

LAST REVISION 12-15-11 | DATE PLOTTED => 13-SEP-2012 | TIME PLOTTED => 13:28

| Dist | COUNTY | ROUTE | POST MILES TOTAL PROJECT | SHEET No. | TOTAL SHEETS |
|---|---|---|---|---|---|
| 04 | Son | 101 | 25.6/29.2 | 18 | 615 |

REGISTERED CIVIL ENGINEER 8/3/11 DATE

9-10-12
PLANS APPROVAL DATE

REGISTERED PROFESSIONAL ENGINEER Fred J. Witteborn No. 56272 Exp. 12-31-12 CIVIL STATE OF CALIFORNIA

*THE STATE OF CALIFORNIA OR ITS OFFICERS OR AGENTS SHALL NOT BE RESPONSIBLE FOR THE ACCURACY OR COMPLETENESS OF SCANNED COPIES OF THIS PLAN SHEET.*

**NOTE:**

FOR ACCURATE RIGHT OF WAY DATA, CONTACT RIGHT OF WAY ENGINEERING AT THE DISTRICT OFFICE.

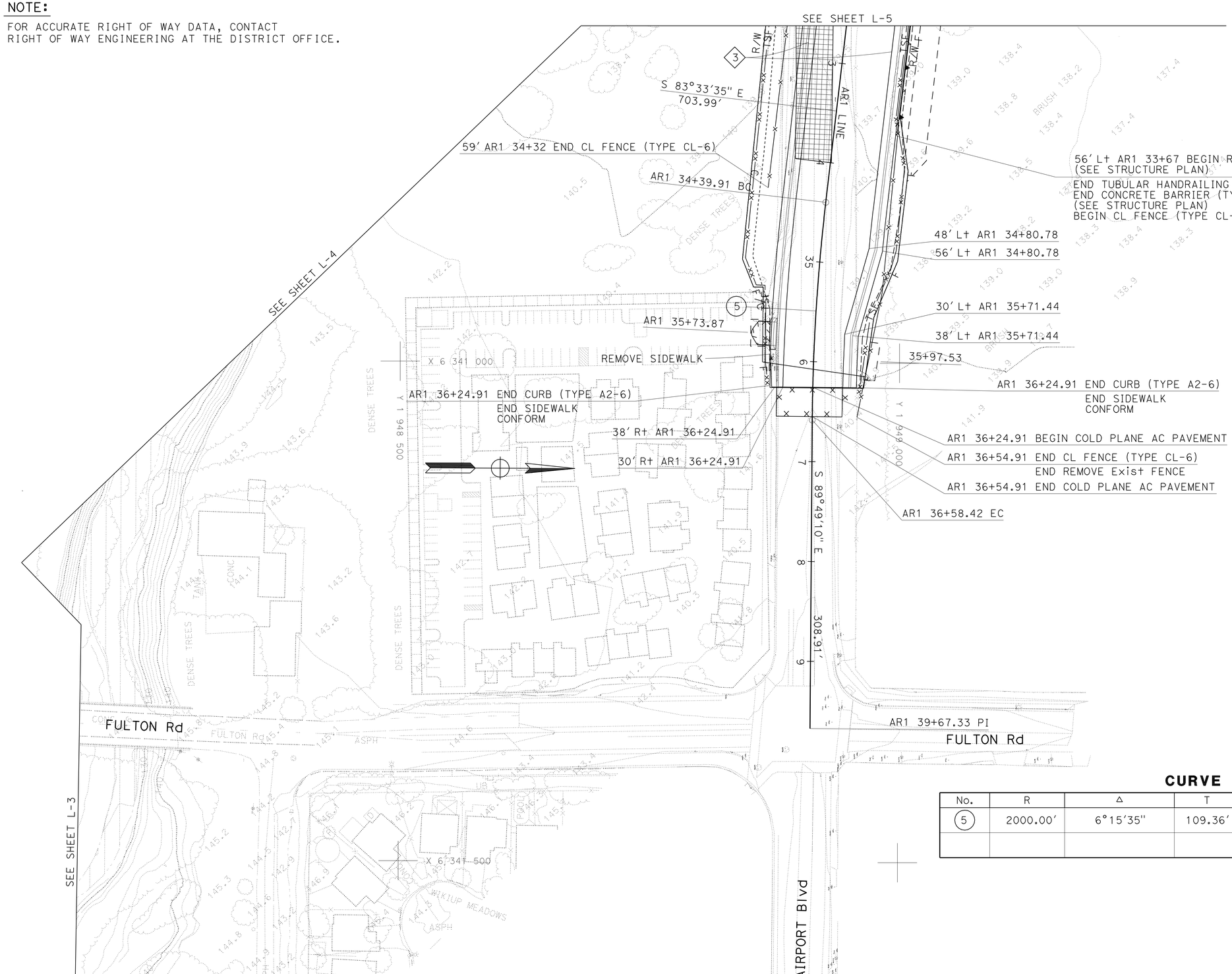


## CURVE DATA

| No. | R | Δ | T | L | N-COORDINATE | E-COORDINATE |
|---|---|---|---|---|---|---|
| 5 | 2000.00' | 6°15'35" | 109.36' | 218.51' | 1950912.82 | 6341063.53 |
| | | | | | | |

FOR NOTES, ABBREVIATIONS AND LEGEND, SEE SHEET L-1

# LAYOUT

SCALE: 1" = 50'

L-9

STATE OF CALIFORNIA - DEPARTMENT OF TRANSPORTATION
Caltrans
DESIGN

FUNCTIONAL SUPERVISOR: JONATHAN LEE
CALCULATED-DESIGNED BY: FRED WITTEBORN
CHECKED BY: JONATHAN LEE
REVISED BY: A
DATE REVISED: A

LAST REVISION 06-14-11
DATE PLOTTED => 13-SEP-2012
TIME PLOTTED => 13:28

| Dist | COUNTY | ROUTE | POST MILES TOTAL PROJECT | SHEET No. | TOTAL SHEETS |
|---|---|---|---|---|---|
| 04 | Son | 101 | 25.6/29.2 | 19 | 615 |

REGISTERED CIVIL ENGINEER 8/3/11 DATE

9-10-12
PLANS APPROVAL DATE

REGISTERED PROFESSIONAL ENGINEER Fred J. Witteborn No. 56272 Exp. 12-31-12 CIVIL STATE OF CALIFORNIA

*THE STATE OF CALIFORNIA OR ITS OFFICERS OR AGENTS SHALL NOT BE RESPONSIBLE FOR THE ACCURACY OR COMPLETENESS OF SCANNED COPIES OF THIS PLAN SHEET.*

NOTE:

FOR ACCURATE RIGHT OF WAY DATA, CONTACT RIGHT OF WAY ENGINEERING AT THE DISTRICT OFFICE.

## CURVE DATA

| No. | R | Δ | T | L | N-COORDINATE | E-COORDINATE |
|---|---|---|---|---|---|---|
| 2 | 7000.00′ | 0°57′41" | 58.72′ | 117.44′ | 1941924.17 | 6338533.55 |
| | | | | | | |

## CURVE DATA (FOR SHEET L-6)

| No. | R | Δ | T | L | N-COORDINATE | E-COORDINATE |
|---|---|---|---|---|---|---|
| 3 | 1000.00′ | 10°39′50" | 93.33′ | 186.12′ | 1949916.32 | 6338933.27 |
| 4 | 2500.00′ | 04°33′53" | 341.68′ | 679.14′ | 1946520.18 | 6339859.23 |
| 8 | 700.00′ | 22°39′58" | 140.29′ | 276.92′ | 1948223.58 | 6339359.27 |
| 9 | 688.00" | 15°56′23" | 96.32′ | 191.40′ | 1948223.58 | 6339359.27 |
| 10 | 3000.00′ | 03°11′29" | 83.57′ | 167.10′ | 1946732.77 | 6337652.00 |
| 11 | 150.00′ | 140°44′10" | 420.51′ | 368.45′ | 1949139.67 | 6339233.82 |
| 12 | 1000.00′ | 29°14′58" | 260.94′ | 510.50′ | 1949180.97 | 6338030.53 |
| 13 | 7546.28′ | 02°03′39" | 135.72′ | 271.42 | 1954510.60 | 6344713.24 |
| 16 | 850.00′ | 42°49′18" | 333.30′ | 635.27′ | 1950131.89 | 6339878.01 |
| 17 | 3000.00′ | 03°11′29" | 83.57′ | 167.11′ | 1951772.52 | 6341268.47 |
| 18 | 23.00′ | 81°35′41" | 19.33′ | 32.75′ | 1948980.79 | 6338791.43 |
| 18b | 962.00′ | 03°35′24" | 30.15′ | 60.28′ | 1949916.32 | 6338933.27 |
| 19 | 60.00′ | 82°31′59" | 52.65′ | 86.43′ | 1949018.41 | 6338971.71 |
| 20 | 2.00′ | 180°51′04" | 298.82′ | 7.01′ | 1949008.87 | 6339096.60 |
| 21 | 42.00′ | 99°40′11" | 49.76′ | 73.06′ | 1949040.37 | 6339167.45 |
| 22 | 108.00′ | 125°21′09" | 209.03′ | 236.28′ | 1949139.67 | 6339233.82 |
| 23 | 1392.00′ | 5°33′03" | 67.48′ | 134.86′ | 1947859.64 | 6338770.89 |
| 24 | 664.00′ | 38°15′04" | 230.26′ | 443.29′ | 1948223.58 | 6339359.27 |
| 33 | 801.00′ | 07°08′58" | 50.06′ | 100.00′ | 1950137.02 | 6339850.09 |
| 34 | 801.00′ | 07°34′39" | 53.04′ | 105.93′ | 1950147.62 | 6339797.89 |
| 35 | 808.00′ | 18°21′38" | 130.65′ | 259.05′ | 1950137.02 | 6339850.09 |
| | | | | | | |
| | | | | | | |

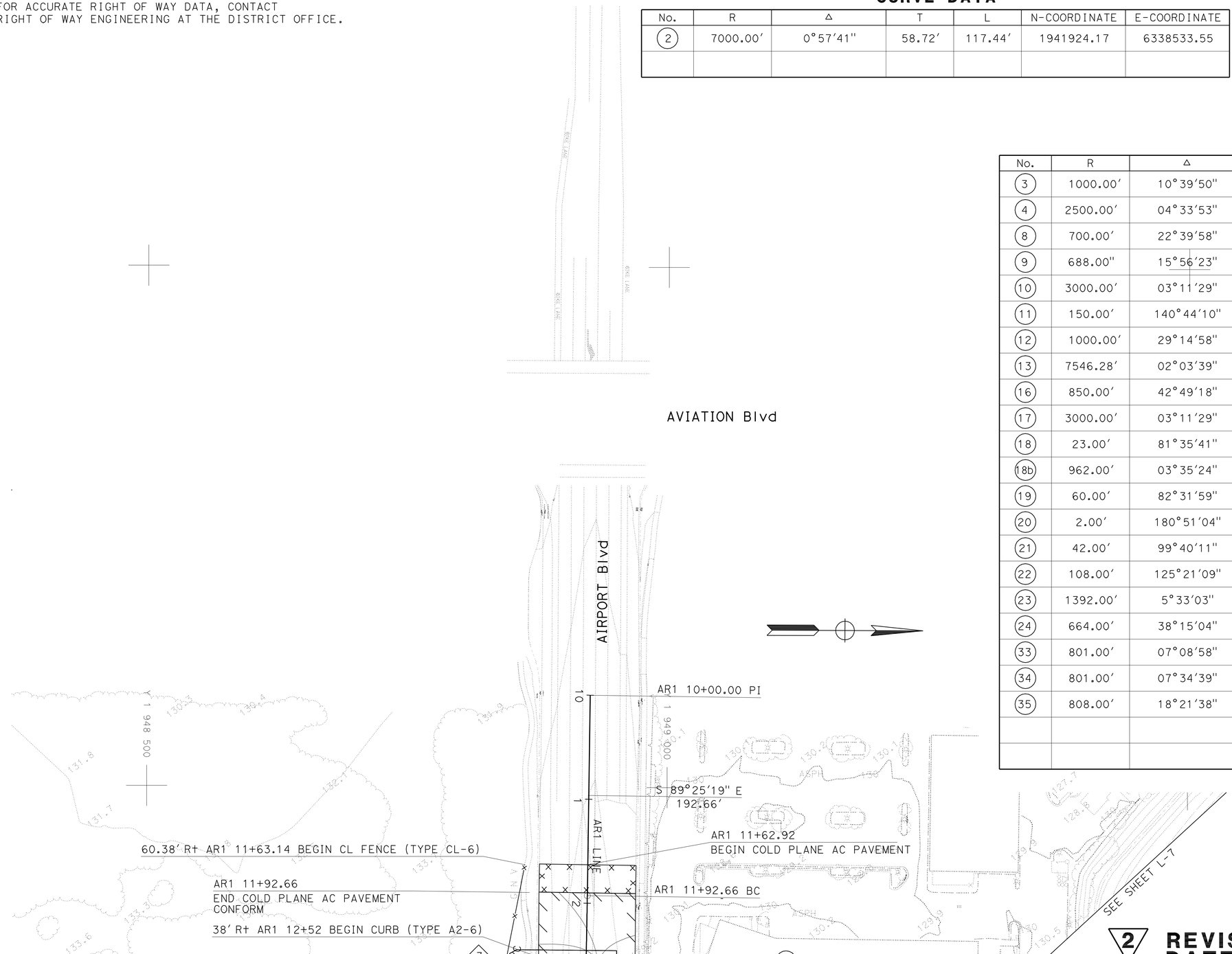


FOR NOTES, ABBREVIATIONS AND LEGEND, SEE SHEET L-1

2 REVISED PER ADDENDUM No. 2 DATED JULY 27, 2012

## LAYOUT

SCALE: 1" = 50′

L-10

| REVISED BY | DATE REVISED |
|---|---|
| A | A |

FRED WITTEBORN — JONATHAN LEE

CALCULATED-DESIGNED BY — CHECKED BY

FUNCTIONAL SUPERVISOR: JONATHAN LEE

STATE OF CALIFORNIA - DEPARTMENT OF TRANSPORTATION — DESIGN — Caltrans

LAST REVISION 12-15-11 | DATE PLOTTED => 13-SEP-2012 | TIME PLOTTED => 13:28

| Dist | COUNTY | ROUTE | POST MILES TOTAL PROJECT | SHEET No. | TOTAL SHEETS |
|---|---|---|---|---|---|
| 04 | Son | 101 | 25.6/29.2 | 20 | 615 |

George A. Acquaye 8/3/11
REGISTERED CIVIL ENGINEER DATE

9-10-12
PLANS APPROVAL DATE

REGISTERED PROFESSIONAL ENGINEER
George A. Acquaye
No. 53859
Exp. 12-31-13
CIVIL
STATE OF CALIFORNIA

*THE STATE OF CALIFORNIA OR ITS OFFICERS OR AGENTS SHALL NOT BE RESPONSIBLE FOR THE ACCURACY OR COMPLETENESS OF SCANNED COPIES OF THIS PLAN SHEET.*

NOTE:

FOR ACCURATE RIGHT OF WAY DATA, CONTACT RIGHT OF WAY ENGINEERING AT THE DISTRICT OFFICE.

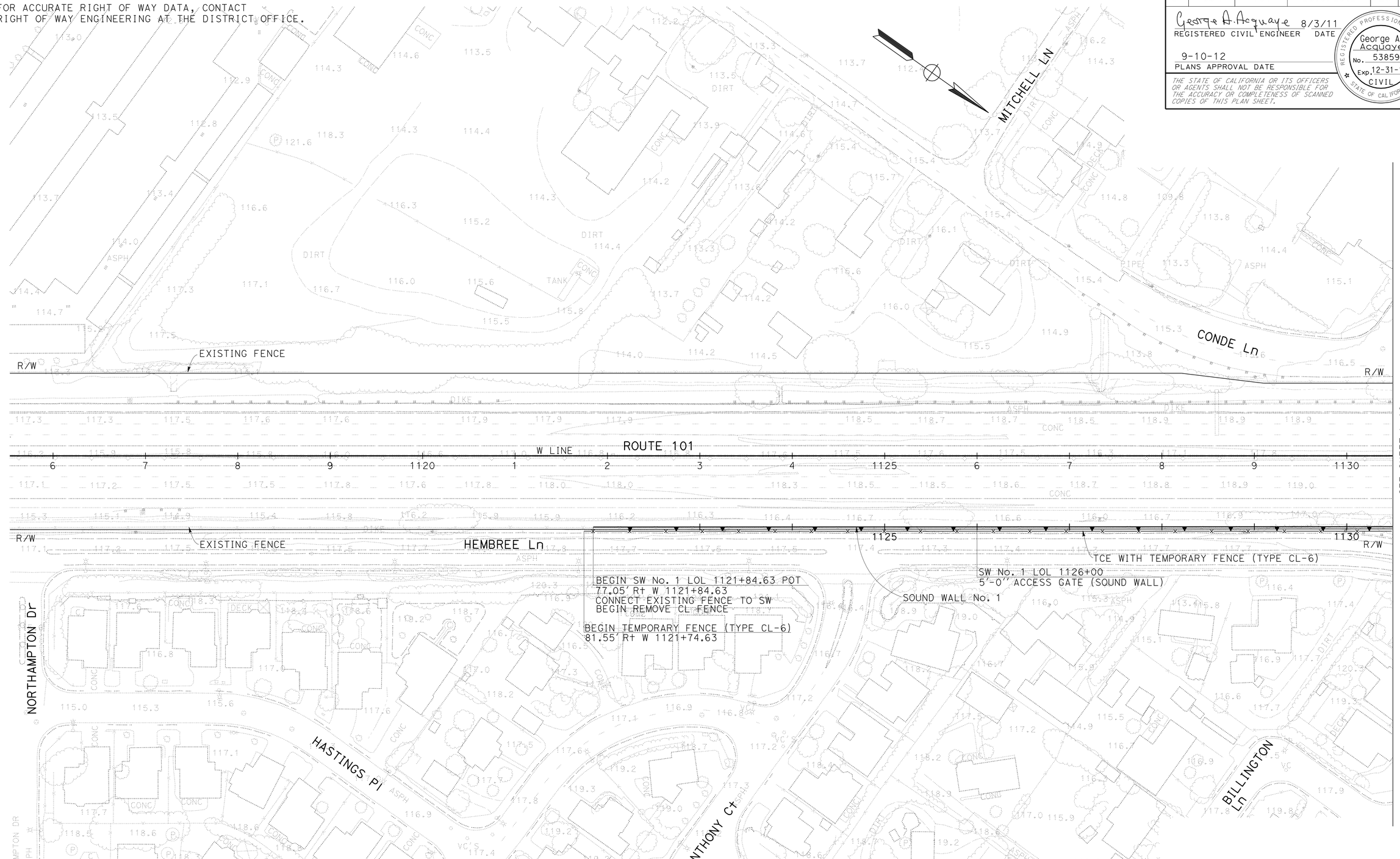


**LAYOUT**
SCALE: 1'' = 50'

**L-11**

| REVISED BY | DATE REVISED |
|---|---|
| AARON C. WANG | GEORGE A. ACQUAYE |
| CALCULATED-DESIGNED BY | CHECKED BY |
| FUNCTIONAL SUPERVISOR | SOTERO D. ANGELES |

STATE OF CALIFORNIA - DEPARTMENT OF TRANSPORTATION
Caltrans
DESIGN

LAST REVISION 07-28-11
DATE PLOTTED => 13-SEP-2012
TIME PLOTTED => 13:28

| Dist | COUNTY | ROUTE | POST MILES TOTAL PROJECT | SHEET No. | TOTAL SHEETS |
|---|---|---|---|---|---|
| 04 | Son | 101 | 25.6/29.2 | 21 | 615 |

George A. Acquaye 8/3/11
REGISTERED CIVIL ENGINEER DATE

9-10-12
PLANS APPROVAL DATE

REGISTERED PROFESSIONAL ENGINEER
George A. Acquaye
No. 53859
Exp. 12-31-13
CIVIL
STATE OF CALIFORNIA

*THE STATE OF CALIFORNIA OR ITS OFFICERS OR AGENTS SHALL NOT BE RESPONSIBLE FOR THE ACCURACY OR COMPLETENESS OF SCANNED COPIES OF THIS PLAN SHEET.*

NOTE:

FOR ACCURATE RIGHT OF WAY DATA, CONTACT RIGHT OF WAY ENGINEERING AT THE DISTRICT OFFICE.

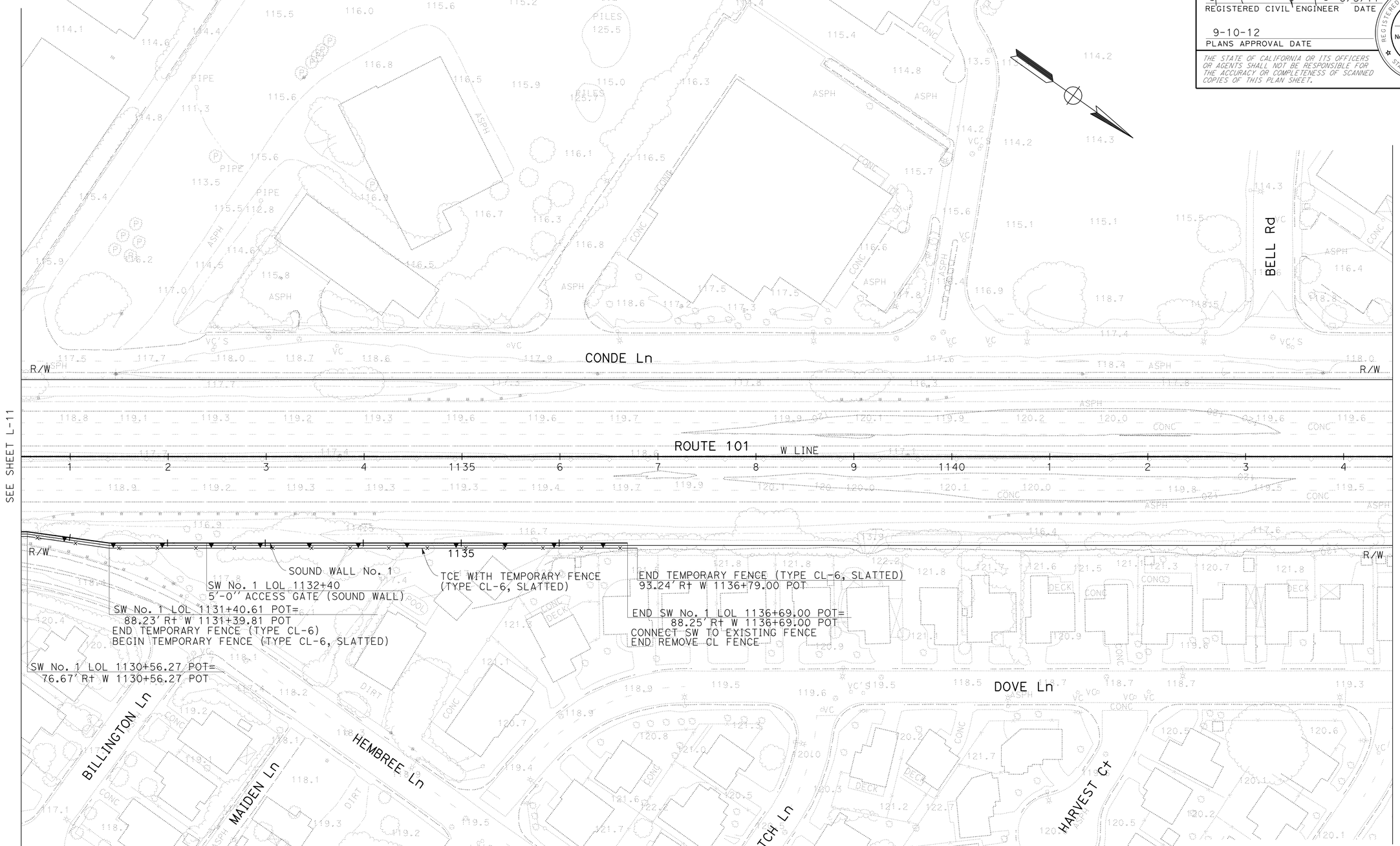


FOR NOTES, ABBREVIATIONS AND LEGEND, SEE SHEET L-1

# LAYOUT

SCALE: 1" = 50'

L-12

| REVISED BY | DATE REVISED |
|---|---|
| | |

AARON C. WANG — GEORGE A. ACQUAYE

CALCULATED-DESIGNED BY — CHECKED BY

FUNCTIONAL SUPERVISOR: SOTERO D. ANGELES

STATE OF CALIFORNIA - DEPARTMENT OF TRANSPORTATION

Caltrans® DESIGN

LAST REVISION 11-21-11 | DATE PLOTTED => 14-SEP-2012 | TIME PLOTTED => 06:35

| Dist | COUNTY | ROUTE | POST MILES TOTAL PROJECT | SHEET No. | TOTAL SHEETS |
|---|---|---|---|---|---|
| 04 | Son | 101 | 25.6/29.2 | 22 | 615 |

George A. Acquaye 8/3/11
REGISTERED CIVIL ENGINEER DATE

9-10-12
PLANS APPROVAL DATE

REGISTERED PROFESSIONAL ENGINEER George A. Acquaye No. 53859 Exp. 12-31-13 CIVIL STATE OF CALIFORNIA

*THE STATE OF CALIFORNIA OR ITS OFFICERS OR AGENTS SHALL NOT BE RESPONSIBLE FOR THE ACCURACY OR COMPLETENESS OF SCANNED COPIES OF THIS PLAN SHEET.*

NOTE:

FOR ACCURATE RIGHT OF WAY DATA, CONTACT RIGHT OF WAY ENGINEERING AT THE DISTRICT OFFICE.

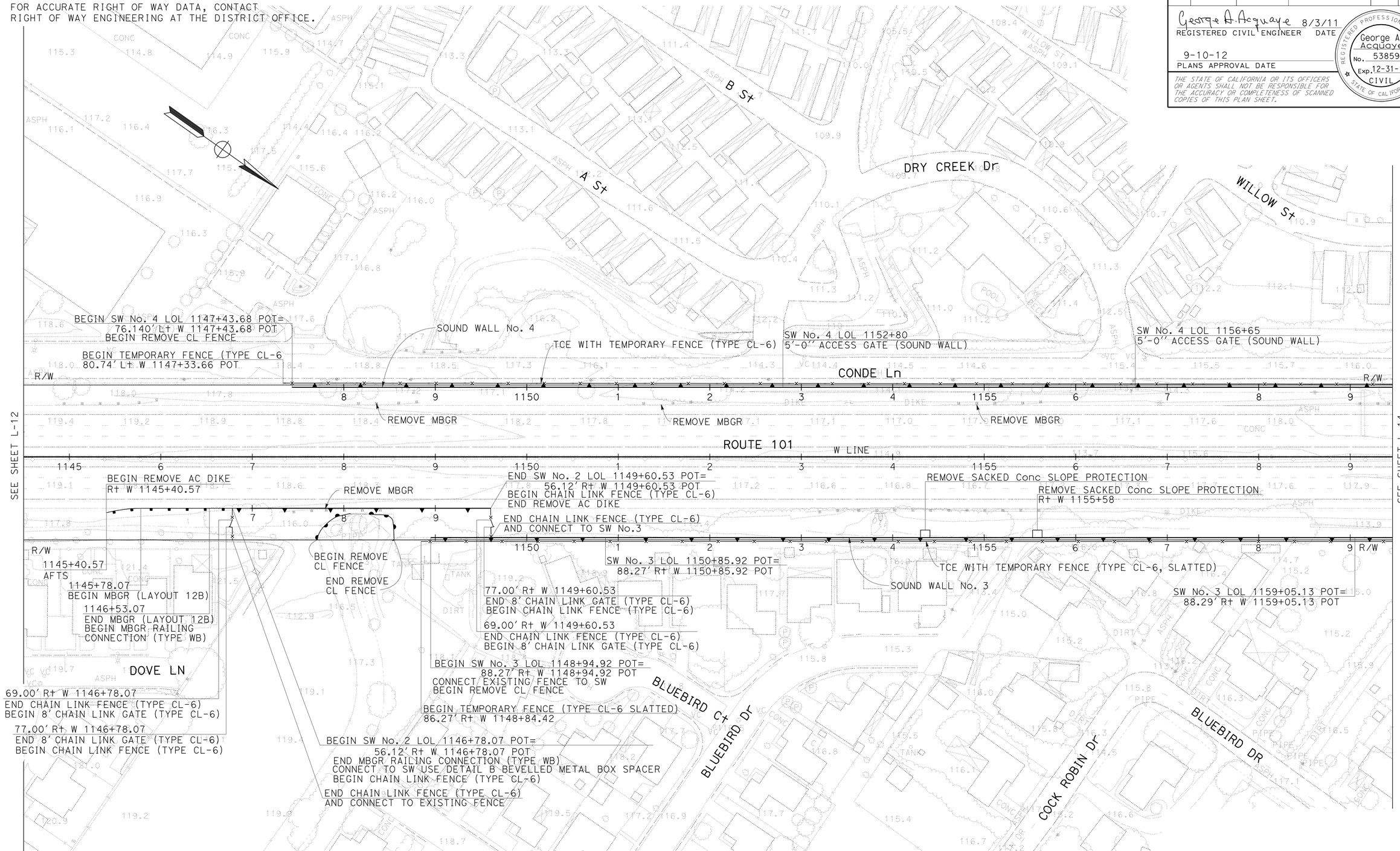


FOR NOTES, ABBREVIATIONS AND LEGEND, SEE SHEET L-1

**LAYOUT**
SCALE: 1" = 50'

**L-13**

STATE OF CALIFORNIA - DEPARTMENT OF TRANSPORTATION
Caltrans
DESIGN

FUNCTIONAL SUPERVISOR: SOTERO D. ANGELES
CALCULATED-DESIGNED BY: GEORGE A. ACQUAYE
CHECKED BY: AARON C. WANG
REVISED BY
DATE REVISED

LAST REVISION 11-21-11
DATE PLOTTED => 14-SEP-2012
TIME PLOTTED => 06:35

| Dist | COUNTY | ROUTE | POST MILES TOTAL PROJECT | SHEET No. | TOTAL SHEETS |
|---|---|---|---|---|---|
| 04 | Son | 101 | 25.6/29.2 | 23 | 615 |

George A. Acquaye 8/3/11
REGISTERED CIVIL ENGINEER DATE

9-10-12
PLANS APPROVAL DATE

REGISTERED PROFESSIONAL ENGINEER
George A. Acquaye
No. 53859
Exp. 12-31-13
CIVIL
STATE OF CALIFORNIA

*THE STATE OF CALIFORNIA OR ITS OFFICERS OR AGENTS SHALL NOT BE RESPONSIBLE FOR THE ACCURACY OR COMPLETENESS OF SCANNED COPIES OF THIS PLAN SHEET.*

NOTE:

FOR ACCURATE RIGHT OF WAY DATA, CONTACT RIGHT OF WAY ENGINEERING AT THE DISTRICT OFFICE.

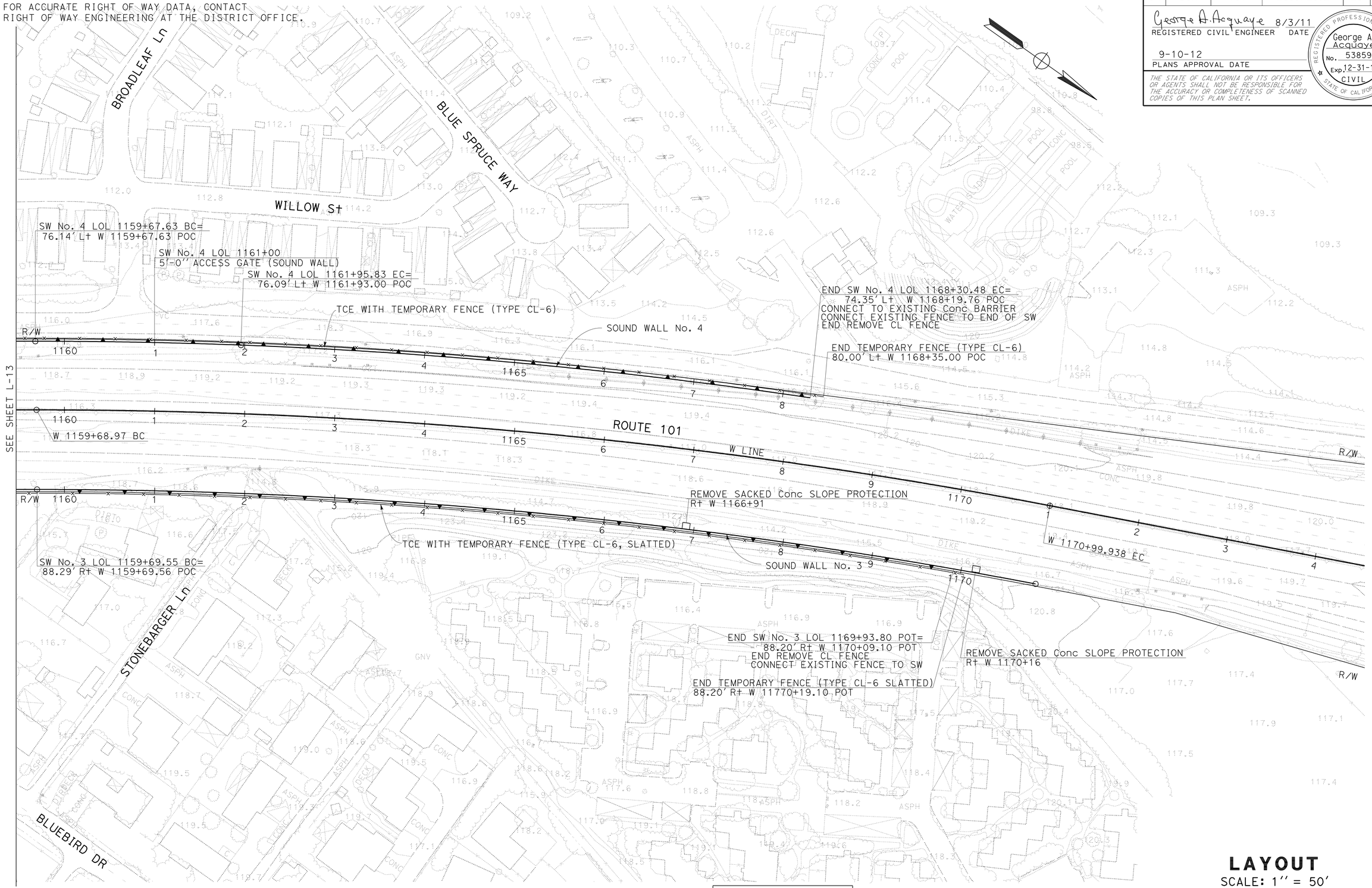


FOR NOTES, ABBREVIATIONS AND LEGEND, SEE SHEET L-1

# LAYOUT

SCALE: 1'' = 50'

L-14

| REVISED BY | DATE REVISED |
|---|---|
| | |

CALCULATED-DESIGNED BY: AARON C. WANG
CHECKED BY: GEORGE A. ACQUAYE
FUNCTIONAL SUPERVISOR: SOTERO D. ANGELES

STATE OF CALIFORNIA - DEPARTMENT OF TRANSPORTATION
Caltrans
DESIGN

LAST REVISION 07-29-11
DATE PLOTTED => 14-SEP-2012
TIME PLOTTED => 06:35

| Dist | COUNTY | ROUTE | POST MILES TOTAL PROJECT | SHEET No. | TOTAL SHEETS |
|---|---|---|---|---|---|
| 04 | Son | 101 | 25.6/29.2 | 24 | 615 |

REGISTERED CIVIL ENGINEER 8/3/11 DATE

9-10-12
PLANS APPROVAL DATE

REGISTERED PROFESSIONAL ENGINEER Fred J. Witteborn No. 56272 Exp. 12-31-12 CIVIL STATE OF CALIFORNIA

*THE STATE OF CALIFORNIA OR ITS OFFICERS OR AGENTS SHALL NOT BE RESPONSIBLE FOR THE ACCURACY OR COMPLETENESS OF SCANNED COPIES OF THIS PLAN SHEET.*

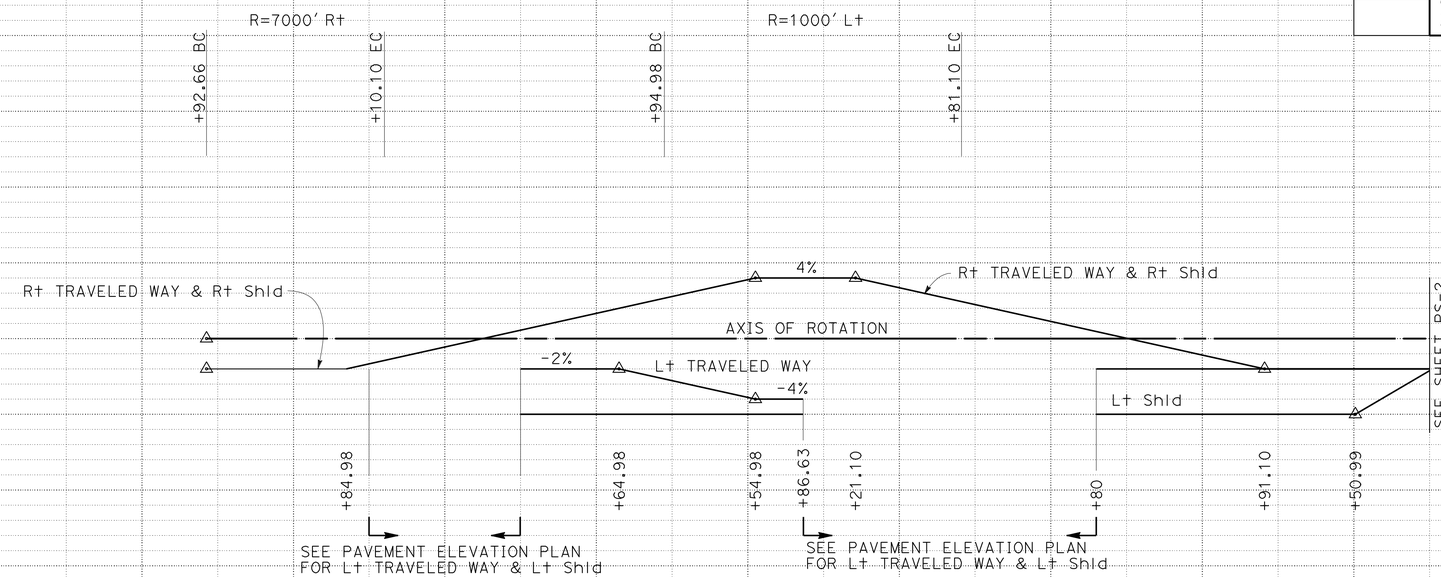


**SUPERELEVATION**

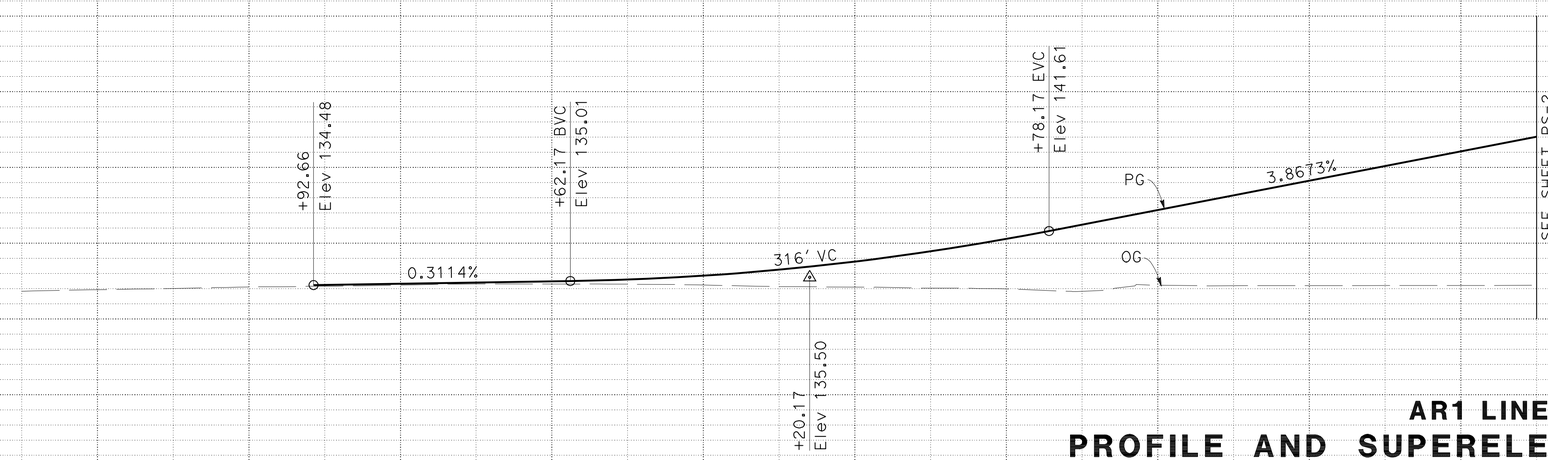


**PROFILE**

## AR1 LINE
## PROFILE AND SUPERELEVATION DIAGRAM

SCALE: Horiz 1" = 50'
Vert 1" = 10'

**PS-1**

| STATION | 10 | 1 | 2 | 3 | 4 | 15 | 6 | 7 | 8 | 9 | 20 | TOTAL |
|---|---|---|---|---|---|---|---|---|---|---|---|---|
| CY Exc | | | | | | | | | | | | |
| CY Emb | | | | | | | | | | | | |

STATE OF CALIFORNIA - DEPARTMENT OF TRANSPORTATION
Caltrans DESIGN

FUNCTIONAL SUPERVISOR: JONATHAN LEE
CALCULATED-DESIGNED BY: FRED WITTEBORN
CHECKED BY: JONATHAN LEE
REVISED BY: A
DATE REVISED: A

LAST REVISION 01-05-11
DATE PLOTTED => 14-SEP-2012
TIME PLOTTED => 06:35

| Dist | COUNTY | ROUTE | POST MILES TOTAL PROJECT | SHEET No. | TOTAL SHEETS |
|---|---|---|---|---|---|
| 04 | Son | 101 | 25.6/29.2 | 25 | 615 |

REGISTERED CIVIL ENGINEER 8/3/11 DATE

9-10-12
PLANS APPROVAL DATE

REGISTERED PROFESSIONAL ENGINEER Fred J. Witteborn No. 56272 Exp. 12-31-12 CIVIL STATE OF CALIFORNIA

*THE STATE OF CALIFORNIA OR ITS OFFICERS OR AGENTS SHALL NOT BE RESPONSIBLE FOR THE ACCURACY OR COMPLETENESS OF SCANNED COPIES OF THIS PLAN SHEET.*

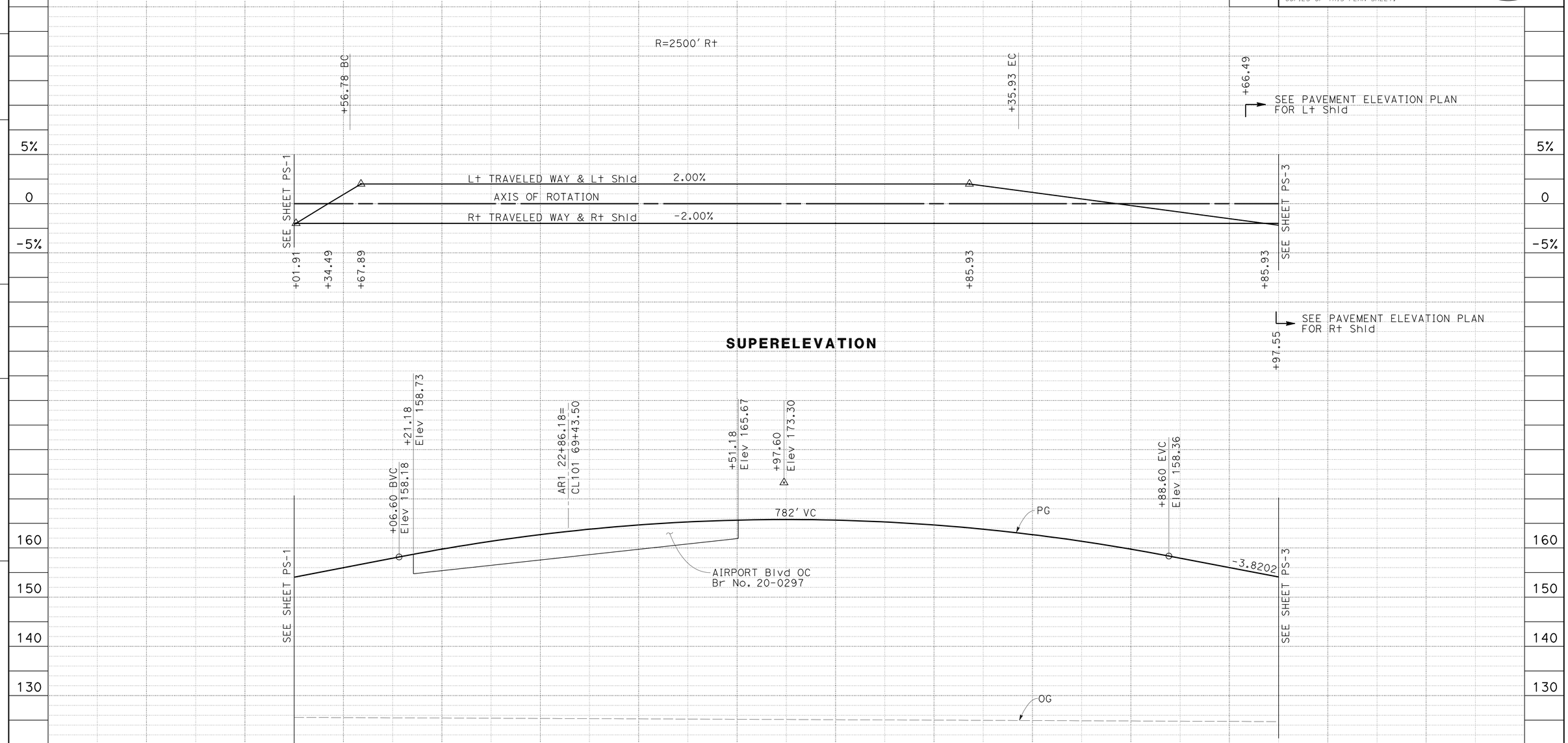


## AR1 LINE
## PROFILE AND SUPERELEVATION DIAGRAM

SCALE: Horiz 1" = 50'
Vert 1" = 10'

**PS-2**

| STATION | 20 | 1 | 2 | 3 | 4 | 25 | 6 | 7 | 8 | 9 | 30 | TOTAL |
|---|---|---|---|---|---|---|---|---|---|---|---|---|
| CY Exc | | | | | | | | | | | | |
| CY Emb | | | | | | | | | | | | |

STATE OF CALIFORNIA - DEPARTMENT OF TRANSPORTATION
Caltrans DESIGN

FUNCTIONAL SUPERVISOR: JONATHAN LEE
CALCULATED-DESIGNED BY: FRED WITTEBORN
CHECKED BY: JONATHAN LEE
REVISED BY: A
DATE REVISED: A

LAST REVISION 01-05-11
DATE PLOTTED => 14-SEP-2012
TIME PLOTTED => 06:36

| Dist | COUNTY | ROUTE | POST MILES TOTAL PROJECT | SHEET No. | TOTAL SHEETS |
|---|---|---|---|---|---|
| 04 | Son | 101 | 25.6/29.2 | 26 | 615 |

REGISTERED CIVIL ENGINEER 8/3/11 DATE

9-10-12
PLANS APPROVAL DATE

REGISTERED PROFESSIONAL ENGINEER Fred J. Witteborn No. 56272 Exp. 12-31-12 CIVIL STATE OF CALIFORNIA

*THE STATE OF CALIFORNIA OR ITS OFFICERS OR AGENTS SHALL NOT BE RESPONSIBLE FOR THE ACCURACY OR COMPLETENESS OF SCANNED COPIES OF THIS PLAN SHEET.*

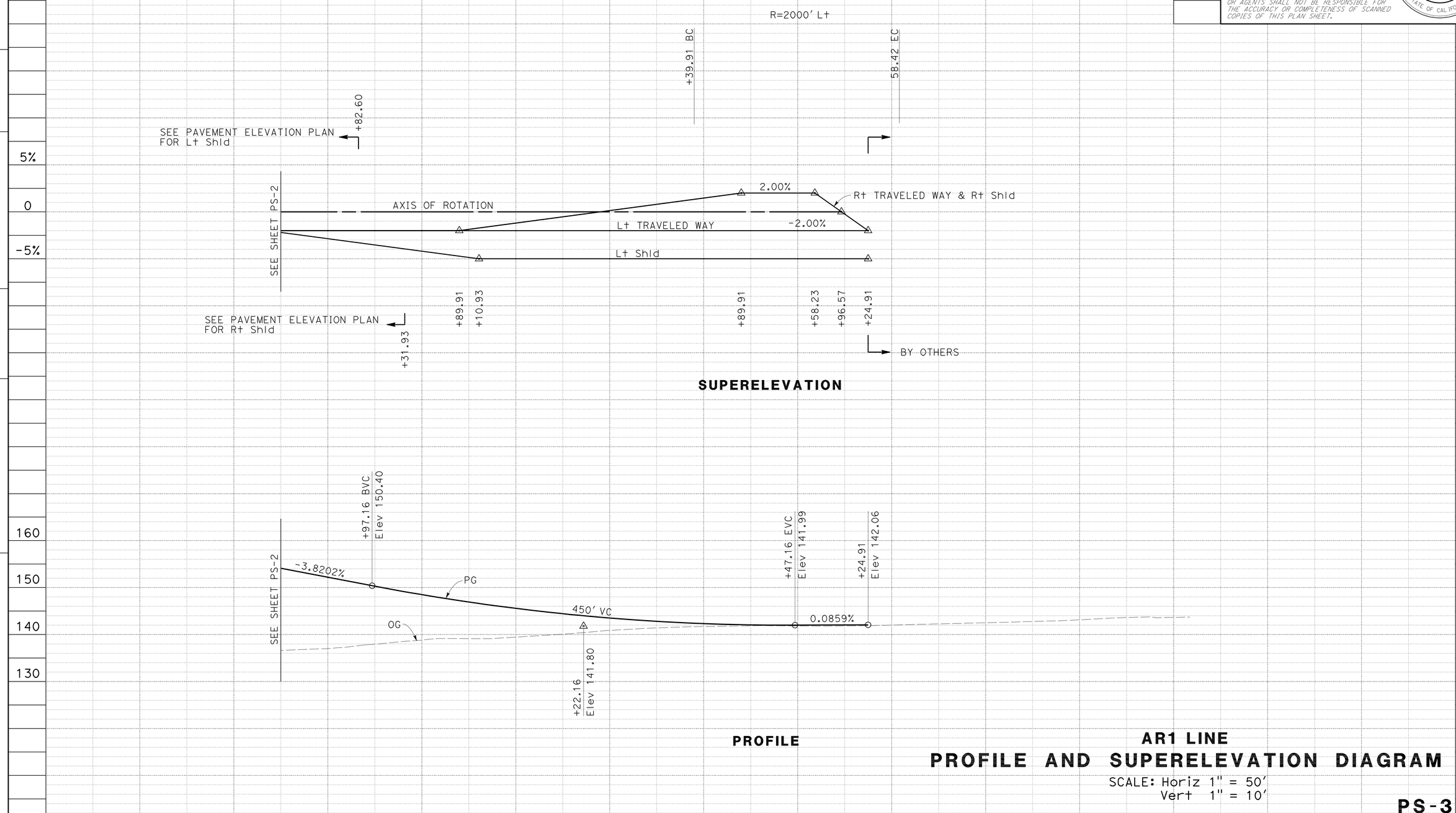


## AR1 LINE
## PROFILE AND SUPERELEVATION DIAGRAM

SCALE: Horiz 1" = 50'
Vert 1" = 10'

**PS-3**

| STATION | 30 | 1 | 2 | 3 | 4 | 35 | 6 | 7 | 8 | 9 | 40 | TOTAL |
|---|---|---|---|---|---|---|---|---|---|---|---|---|
| CY Exc | | | | | | | | | | | | |
| CY Emb | | | | | | | | | | | | |

STATE OF CALIFORNIA - DEPARTMENT OF TRANSPORTATION
Caltrans
DESIGN

FUNCTIONAL SUPERVISOR: JONATHAN LEE
CALCULATED-DESIGNED BY: FRED WITTEBORN
CHECKED BY: JONATHAN LEE
REVISED BY: A
DATE REVISED: A

LAST REVISION 01-05-11
DATE PLOTTED => 14-SEP-2012
TIME PLOTTED => 06:36

| Dist | COUNTY | ROUTE | POST MILES TOTAL PROJECT | SHEET No. | TOTAL SHEETS |
|---|---|---|---|---|---|
| 04 | Son | 101 | 25.6/29.2 | 27 | 615 |

REGISTERED CIVIL ENGINEER 8/3/11 DATE

9-10-12
PLANS APPROVAL DATE

REGISTERED PROFESSIONAL ENGINEER Fred J. Witteborn No. 56272 Exp. 12-31-12 CIVIL STATE OF CALIFORNIA

*THE STATE OF CALIFORNIA OR ITS OFFICERS OR AGENTS SHALL NOT BE RESPONSIBLE FOR THE ACCURACY OR COMPLETENESS OF SCANNED COPIES OF THIS PLAN SHEET.*

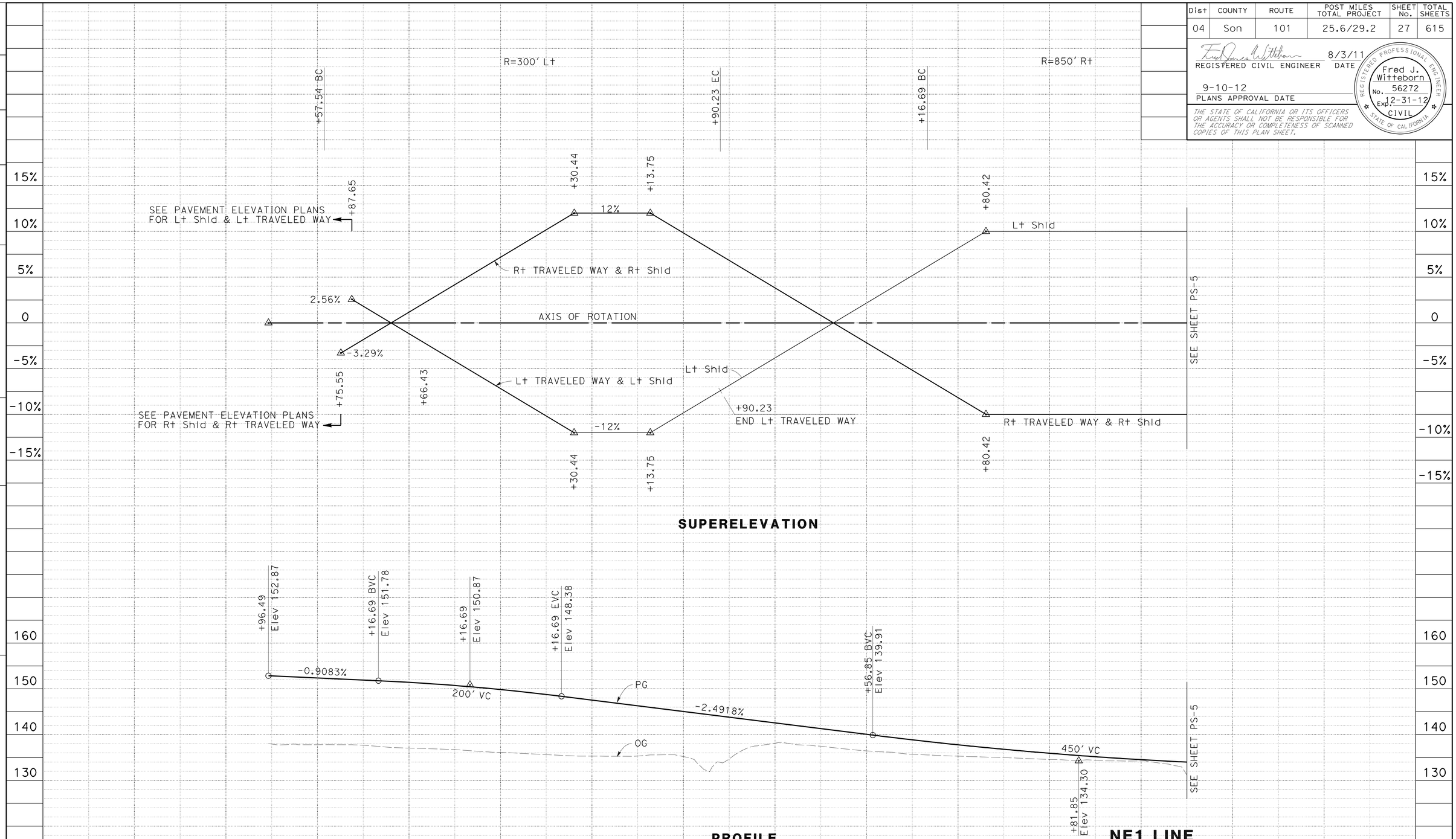


## NE1 LINE
# PROFILE AND SUPERELEVATION DIAGRAM

SCALE: Horiz 1" = 50'
Vert 1" = 10'

**PS-4**

STATE OF CALIFORNIA - DEPARTMENT OF TRANSPORTATION
DESIGN
FUNCTIONAL SUPERVISOR: JONATHAN LEE
CALCULATED-DESIGNED BY: FRED WITTEBORN
CHECKED BY: JONATHAN LEE
REVISED BY: A
DATE REVISED: A

LAST REVISION 01-05-11
DATE PLOTTED => 14-SEP-2012
TIME PLOTTED => 06:36

| Dist | COUNTY | ROUTE | POST MILES TOTAL PROJECT | SHEET No. | TOTAL SHEETS |
|---|---|---|---|---|---|
| 04 | Son | 101 | 25.6/29.2 | 28 | 615 |

REGISTERED CIVIL ENGINEER 8/3/11 DATE

9-10-12
PLANS APPROVAL DATE

REGISTERED PROFESSIONAL ENGINEER Fred J. Witteborn No. 56272 Exp. 12-31-12 CIVIL STATE OF CALIFORNIA

*THE STATE OF CALIFORNIA OR ITS OFFICERS OR AGENTS SHALL NOT BE RESPONSIBLE FOR THE ACCURACY OR COMPLETENESS OF SCANNED COPIES OF THIS PLAN SHEET.*

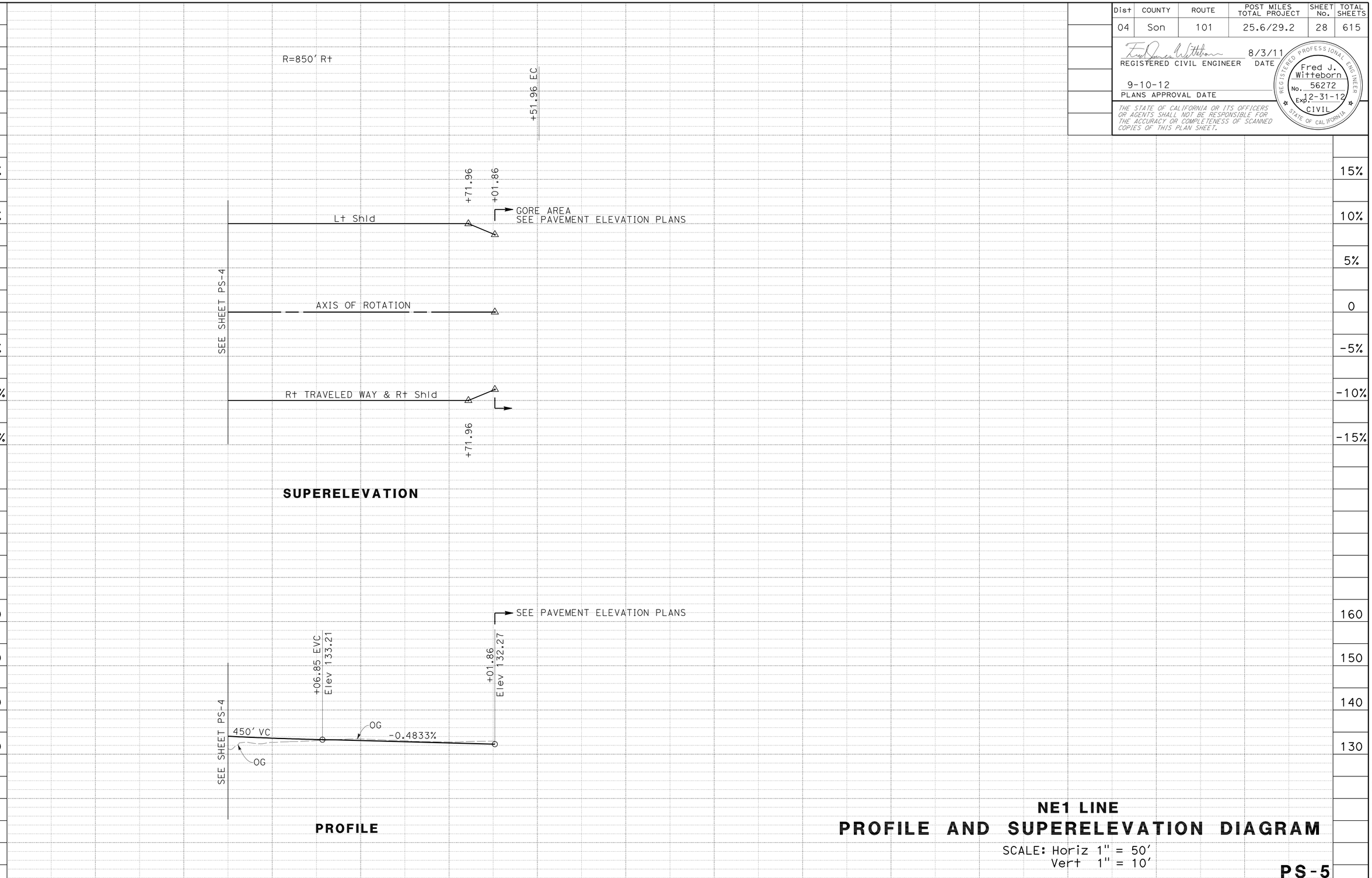


## NE1 LINE
# PROFILE AND SUPERELEVATION DIAGRAM

SCALE: Horiz 1" = 50'
Vert 1" = 10'

**PS-5**

| STATION | 2 | 3 | 4 | 75 | 6 | 7 | 8 | 9 | 80 | 1 | 2 | TOTAL |
|---|---|---|---|---|---|---|---|---|---|---|---|---|
| CY Exc | | | | | | | | | | | | |
| CY Emb | | | | | | | | | | | | |

STATE OF CALIFORNIA - DEPARTMENT OF TRANSPORTATION
Caltrans DESIGN

FUNCTIONAL SUPERVISOR: JONATHAN LEE
CALCULATED-DESIGNED BY: FRED WITTEBORN
CHECKED BY: JONATHAN LEE
REVISED BY: A
DATE REVISED: A

LAST REVISION 08-25-10
DATE PLOTTED => 14-SEP-2012
TIME PLOTTED => 06:36

| Dist | COUNTY | ROUTE | POST MILES TOTAL PROJECT | SHEET No. | TOTAL SHEETS |
|---|---|---|---|---|---|
| 04 | Son | 101 | 25.6/29.2 | 29 | 615 |

REGISTERED CIVIL ENGINEER 8/3/11 DATE

9-10-12
PLANS APPROVAL DATE

REGISTERED PROFESSIONAL ENGINEER Fred J. Witteborn No. 56272 Exp. 12-31-12 CIVIL STATE OF CALIFORNIA

*THE STATE OF CALIFORNIA OR ITS OFFICERS OR AGENTS SHALL NOT BE RESPONSIBLE FOR THE ACCURACY OR COMPLETENESS OF SCANNED COPIES OF THIS PLAN SHEET.*

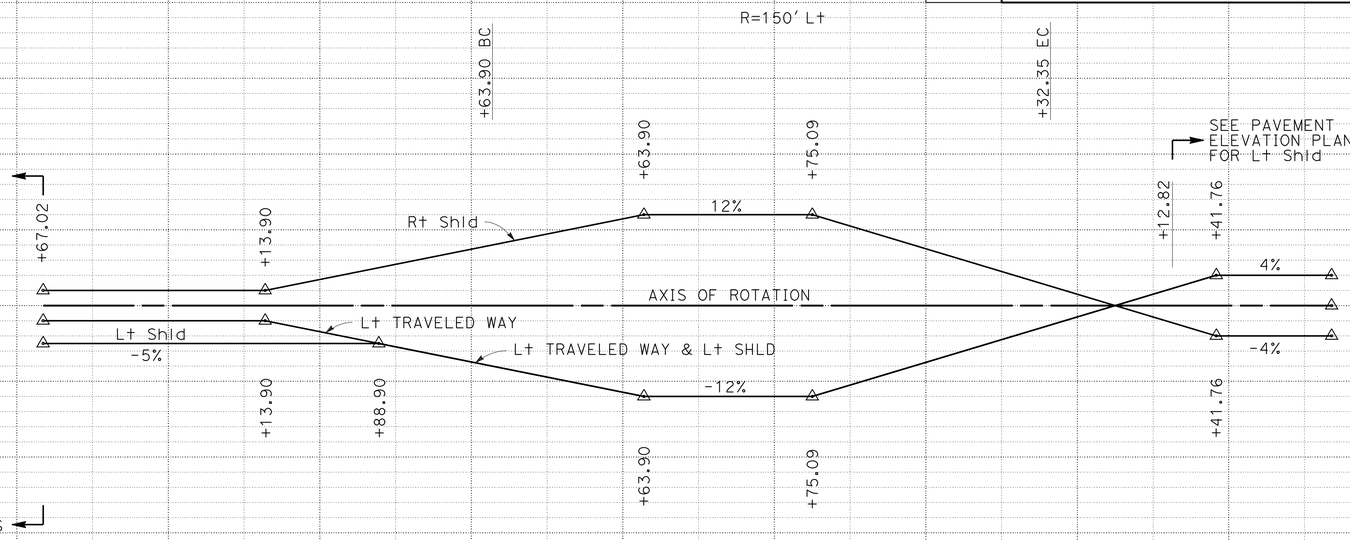


**SUPERELEVATION**

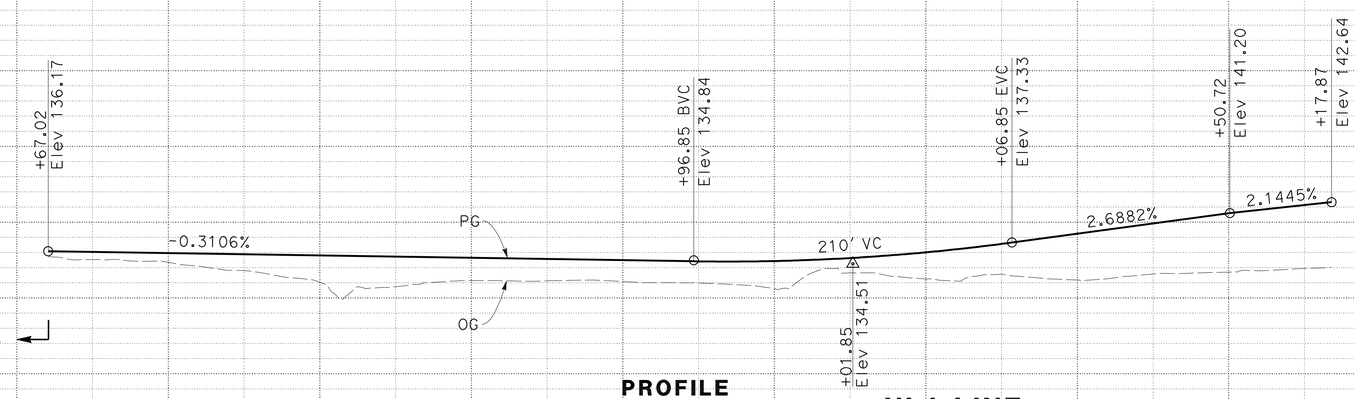


**PROFILE**

**NL1 LINE**

# PROFILE AND SUPERELEVATION DIAGRAM

SCALE: Horiz 1" = 50'
Vert 1" = 10'

**PS-6**

| STATION | 65 | 6 | 7 | 8 | 9 | 70 | 1 | 2 | 3 | 4 | 75 | 6 | 7 | 8 | 9 | TOTAL |
|---|---|---|---|---|---|---|---|---|---|---|---|---|---|---|---|---|
| CY Exc | | | | | | | | | | | | | | | | |
| CY Emb | | | | | | | | | | | | | | | | |

STATE OF CALIFORNIA - DEPARTMENT OF TRANSPORTATION
Caltrans DESIGN

FUNCTIONAL SUPERVISOR: JONATHAN LEE
CALCULATED-DESIGNED BY: FRED WITTEBORN
CHECKED BY: JONATHAN LEE
REVISED BY: A
DATE REVISED: A

LAST REVISION 01-07-11
DATE PLOTTED => 14-SEP-2012
TIME PLOTTED => 06:36

| Dist | COUNTY | ROUTE | POST MILES TOTAL PROJECT | SHEET No. | TOTAL SHEETS |
|---|---|---|---|---|---|
| 04 | Son | 101 | 25.6/29.2 | 30 | 615 |

REGISTERED CIVIL ENGINEER 8/3/11 DATE

9-10-12
PLANS APPROVAL DATE

REGISTERED PROFESSIONAL ENGINEER Fred J. Witteborn No. 56272 Exp. 12-31-12 CIVIL STATE OF CALIFORNIA

*THE STATE OF CALIFORNIA OR ITS OFFICERS OR AGENTS SHALL NOT BE RESPONSIBLE FOR THE ACCURACY OR COMPLETENESS OF SCANNED COPIES OF THIS PLAN SHEET.*

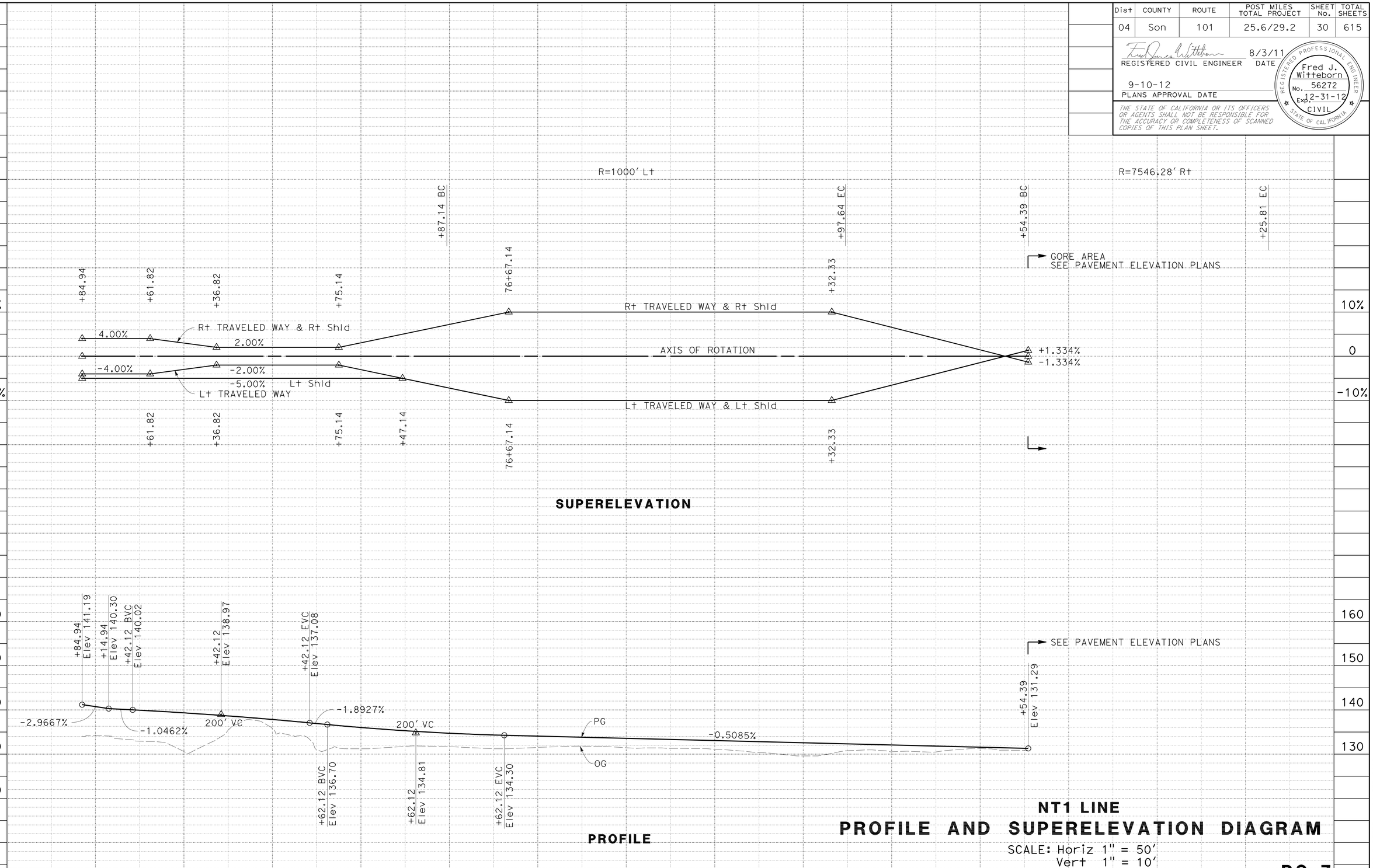


**NT1 LINE**

**PROFILE AND SUPERELEVATION DIAGRAM**

SCALE: Horiz 1" = 50'
Vert 1" = 10'

**PS-7**

| STATION | 2 | 3 | 4 | 75 | 6 | 7 | 8 | 9 | 80 | 1 | 2 | 3 | 4 | 85 | TOTAL |
|---|---|---|---|---|---|---|---|---|---|---|---|---|---|---|---|
| CY Exc | | | | | | | | | | | | | | | |
| CY Emb | | | | | | | | | | | | | | | |

STATE OF CALIFORNIA - DEPARTMENT OF TRANSPORTATION
Caltrans
DESIGN

FUNCTIONAL SUPERVISOR: JONATHAN LEE
CALCULATED-DESIGNED BY: FRED WITTEBORN
CHECKED BY: JONATHAN LEE
REVISED BY: A
DATE REVISED: A

LAST REVISION 01-05-11
DATE PLOTTED => 14-SEP-2012
TIME PLOTTED => 06:36

| Dist | COUNTY | ROUTE | POST MILES TOTAL PROJECT | SHEET No. | TOTAL SHEETS |
|---|---|---|---|---|---|
| 04 | Son | 101 | 25.6/29.2 | 31 | 615 |

REGISTERED CIVIL ENGINEER 8/3/11 DATE

9-10-12
PLANS APPROVAL DATE

REGISTERED PROFESSIONAL ENGINEER Fred J. Witteborn No. 56272 Exp. 12-31-12 CIVIL STATE OF CALIFORNIA

*THE STATE OF CALIFORNIA OR ITS OFFICERS OR AGENTS SHALL NOT BE RESPONSIBLE FOR THE ACCURACY OR COMPLETENESS OF SCANNED COPIES OF THIS PLAN SHEET.*

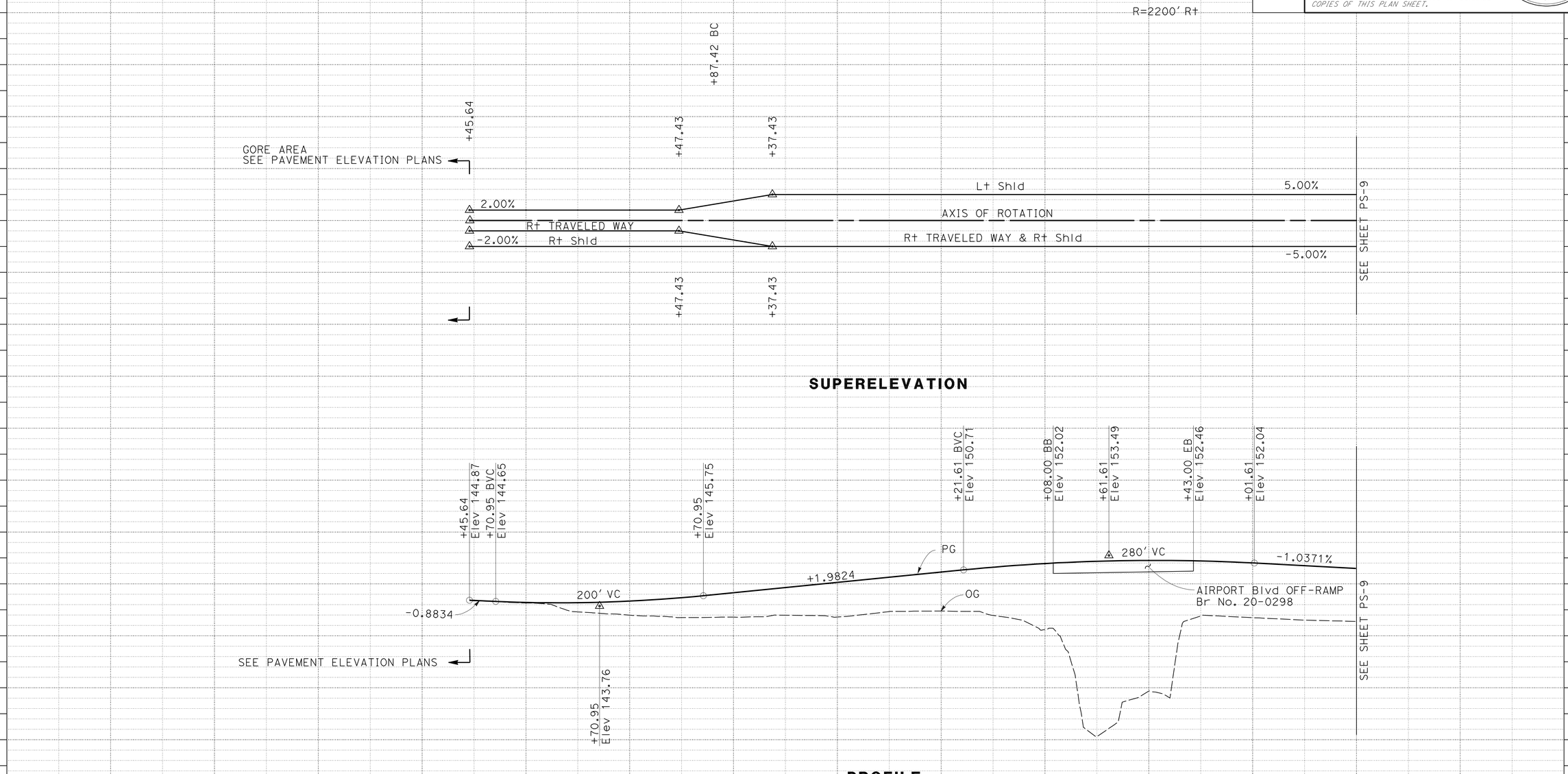


## SE2 LINE
## PROFILE AND SUPERELEVATION DIAGRAM

SCALE: Horiz 1" = 50'
Vert 1" = 10'

**PS-8**

| STATION | 8 | 8 | 50 | 1 | 2 | 3 | 4 | 55 | 6 | 7 | 8 | 9 | TOTAL |
|---|---|---|---|---|---|---|---|---|---|---|---|---|---|
| CY Exc | | | | | | | | | | | | | |
| CY Emb | | | | | | | | | | | | | |

| REVISED BY | DATE REVISED |
|---|---|
| A | A |

FRED WITTEBORN — JONATHAN LEE
CALCULATED-DESIGNED BY — CHECKED BY
FUNCTIONAL SUPERVISOR — JONATHAN LEE

STATE OF CALIFORNIA - DEPARTMENT OF TRANSPORTATION
Caltrans
DESIGN

LAST REVISION 01-06-11
DATE PLOTTED => 14-SEP-2012
TIME PLOTTED => 06:36

| Dist | COUNTY | ROUTE | POST MILES TOTAL PROJECT | SHEET No. | TOTAL SHEETS |
|---|---|---|---|---|---|
| 04 | Son | 101 | 25.6/29.2 | 32 | 615 |

REGISTERED CIVIL ENGINEER 8/3/11 DATE

9-10-12
PLANS APPROVAL DATE

REGISTERED PROFESSIONAL ENGINEER Fred J. Witteborn No. 56272 Exp. 12-31-12 CIVIL STATE OF CALIFORNIA

*THE STATE OF CALIFORNIA OR ITS OFFICERS OR AGENTS SHALL NOT BE RESPONSIBLE FOR THE ACCURACY OR COMPLETENESS OF SCANNED COPIES OF THIS PLAN SHEET.*

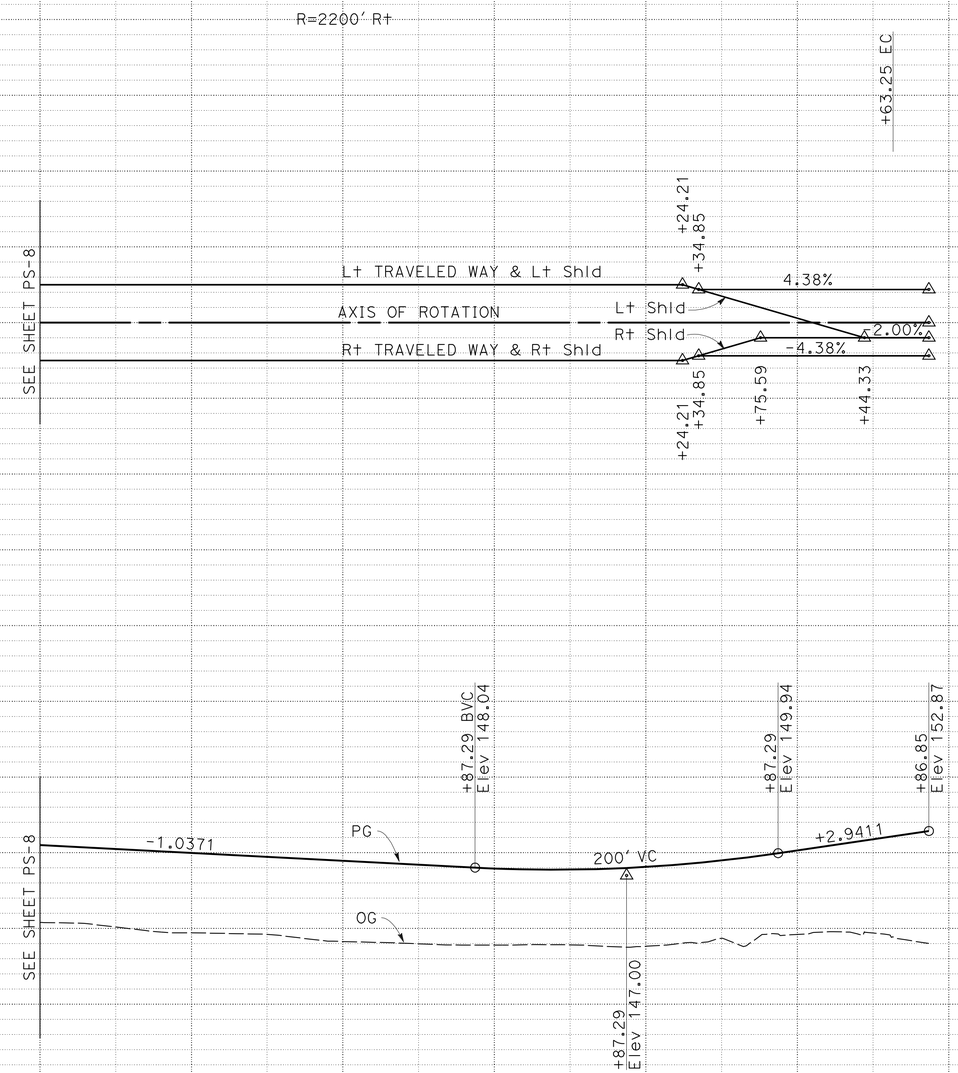


**PROFILE**

## SE2 LINE
# PROFILE AND SUPERELEVATION DIAGRAM

SCALE: Horiz 1" = 50'
Vert 1" = 10'

**PS-9**

| STATION | 9 | 60 | 1 | 2 | 3 | 4 | 65 | TOTAL |
|---|---|---|---|---|---|---|---|---|
| CY Exc | | | | | | | | |
| CY Emb | | | | | | | | |

STATE OF CALIFORNIA - DEPARTMENT OF TRANSPORTATION
Caltrans
DESIGN

FUNCTIONAL SUPERVISOR: JONATHAN LEE
CALCULATED-DESIGNED BY: FRED WITTEBORN
CHECKED BY: JONATHAN LEE

REVISED BY: A
DATE REVISED: A

LAST REVISION 01-06-11
DATE PLOTTED => 14-SEP-2012
TIME PLOTTED => 06:36

| Dist | COUNTY | ROUTE | POST MILES TOTAL PROJECT | SHEET No. | TOTAL SHEETS |
|---|---|---|---|---|---|
| 04 | Son | 101 | 25.6/29.2 | 33 | 615 |

REGISTERED CIVIL ENGINEER 8/3/11 DATE

9-10-12
PLANS APPROVAL DATE

REGISTERED PROFESSIONAL ENGINEER Fred J. Witteborn No. 56272 Exp. 12-31-12 CIVIL STATE OF CALIFORNIA

*THE STATE OF CALIFORNIA OR ITS OFFICERS OR AGENTS SHALL NOT BE RESPONSIBLE FOR THE ACCURACY OR COMPLETENESS OF SCANNED COPIES OF THIS PLAN SHEET.*

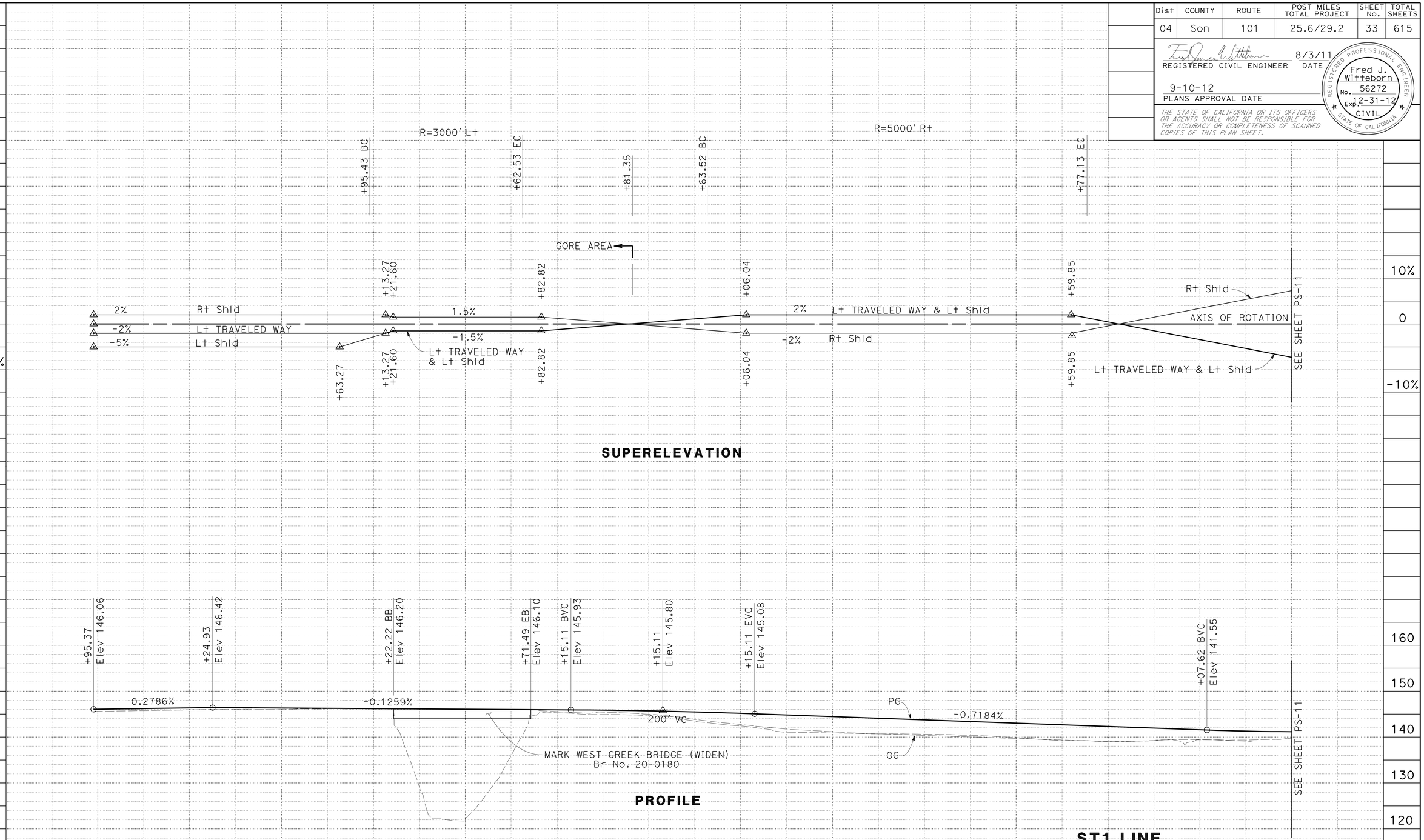


## ST1 LINE
# PROFILE AND SUPERELEVATION DIAGRAM

SCALE: Horiz 1" = 50'
Vert 1" = 10'

**PS-10**

STATE OF CALIFORNIA - DEPARTMENT OF TRANSPORTATION
Caltrans
DESIGN
FUNCTIONAL SUPERVISOR: JONATHAN LEE
CALCULATED-DESIGNED BY: FRED WITTEBORN
CHECKED BY: JONATHAN LEE
REVISED BY: A
DATE REVISED: A

LAST REVISION 01-07-11
DATE PLOTTED => 14-SEP-2012
TIME PLOTTED => 06:36

| Dist | COUNTY | ROUTE | POST MILES TOTAL PROJECT | SHEET No. | TOTAL SHEETS |
|---|---|---|---|---|---|
| 04 | Son | 101 | 25.6/29.2 | 34 | 615 |

REGISTERED CIVIL ENGINEER 8/3/11 DATE

9-10-12
PLANS APPROVAL DATE

REGISTERED PROFESSIONAL ENGINEER Fred J. Witteborn No. 56272 Exp. 12-31-12 CIVIL STATE OF CALIFORNIA

*THE STATE OF CALIFORNIA OR ITS OFFICERS OR AGENTS SHALL NOT BE RESPONSIBLE FOR THE ACCURACY OR COMPLETENESS OF SCANNED COPIES OF THIS PLAN SHEET.*

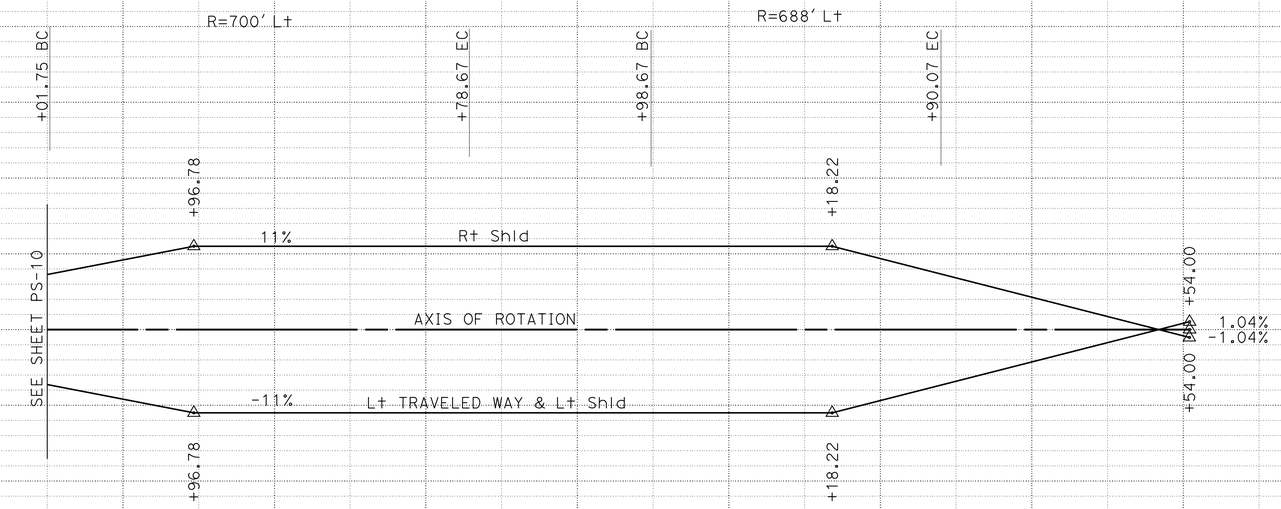


**SUPERELEVATION**

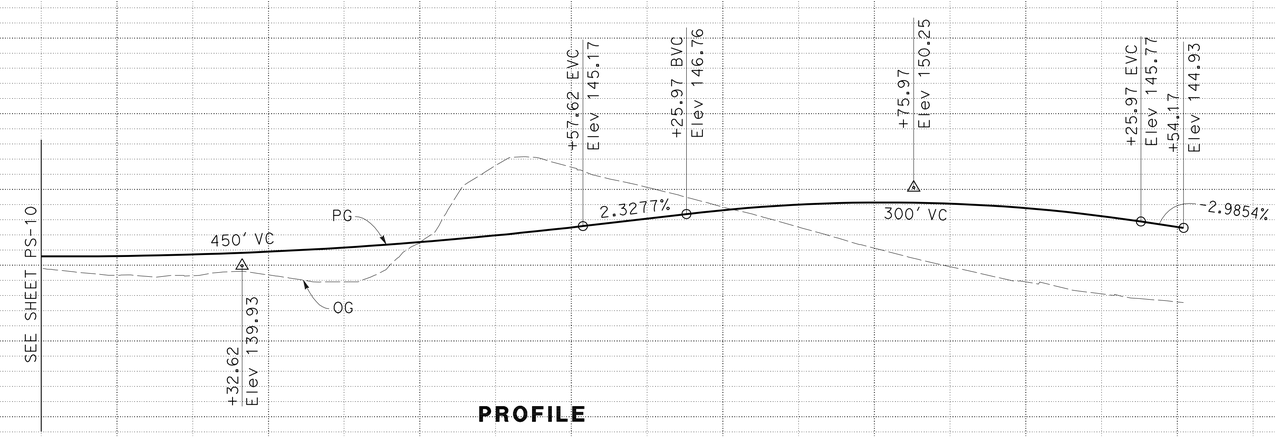


**PROFILE**

## ST1 LINE
# PROFILE AND SUPERELEVATION DIAGRAM

SCALE: Horiz 1" = 50'
Vert 1" = 10'

**PS-11**

| STATION | 65 | 6 | 7 | 8 | 9 | 70 | 1 | 2 | 3 | 4 | 75 | TOTAL |
|---|---|---|---|---|---|---|---|---|---|---|---|---|
| CY Exc | | | | | | | | | | | | |
| CY Emb | | | | | | | | | | | | |

STATE OF CALIFORNIA - DEPARTMENT OF TRANSPORTATION
Caltrans® DESIGN
FUNCTIONAL SUPERVISOR: JONATHAN LEE
CALCULATED-DESIGNED BY: FRED WITTEBORN
CHECKED BY: JONATHAN LEE
REVISED BY: A
DATE REVISED: A

LAST REVISION DATE PLOTTED => 14-SEP-2012
08-25-10 TIME PLOTTED => 06:36

| Dist | COUNTY | ROUTE | POST MILES TOTAL PROJECT | SHEET No. | TOTAL SHEETS |
|---|---|---|---|---|---|
| 04 | Son | 101 | 25.6/29.2 | 35 | 615 |

REGISTERED CIVIL ENGINEER 8/3/11 DATE

9-10-12
PLANS APPROVAL DATE

REGISTERED PROFESSIONAL ENGINEER
Fred J. Witteborn
No. 56272
Exp. 12-31-12
CIVIL
STATE OF CALIFORNIA

*THE STATE OF CALIFORNIA OR ITS OFFICERS OR AGENTS SHALL NOT BE RESPONSIBLE FOR THE ACCURACY OR COMPLETENESS OF SCANNED COPIES OF THIS PLAN SHEET.*

## NOTES:

1. FOR ACCURATE RIGHT OF WAY DATA, CONTACT RIGHT OF WAY ENGINEERING AT THE DISTRICT OFFICE.
2. ALL ROADWAY ELEVATIONS ARE 50′ APART UNLESS OTHERWISE NOTED.
3. ALL CURB RETURN AND STREET ELEVATIONS ARE 10′ APART UNLESS OTHERWISE NOTED.
4. CURB RETURN ELEVATIONS AT 1/4TH INTERVALS OF CURB RETURN LENGTH.

# CONSTRUCTION DETAILS
## PAVEMENT ELEVATION PLAN

SCALE: 1" = 50′

THIS PLAN ACCURATE FOR PAVEMENT ELEVATION ONLY

C-1

| | |
|---|---|
| REVISED BY | A |
| DATE REVISED | A |
| CALCULATED-DESIGNED BY | ABEER AQRABAWI |
| CHECKED BY | JONATHAN LEE |
| FUNCTIONAL SUPERVISOR | JONATHAN LEE |

STATE OF CALIFORNIA - DEPARTMENT OF TRANSPORTATION
Caltrans
DESIGN

LAST REVISION 06-08-11 | DATE PLOTTED => 14-SEP-2012 | TIME PLOTTED => 06:36

| Dist | COUNTY | ROUTE | POST MILES TOTAL PROJECT | SHEET No. | TOTAL SHEETS |
|---|---|---|---|---|---|
| 04 | Son | 101 | 25.6/29.2 | 36 | 615 |

REGISTERED CIVIL ENGINEER 8/3/11 DATE

9-10-12
PLANS APPROVAL DATE

REGISTERED PROFESSIONAL ENGINEER Fred J. Witteborn No. 56272 Exp. 12-31-12 CIVIL STATE OF CALIFORNIA

*THE STATE OF CALIFORNIA OR ITS OFFICERS OR AGENTS SHALL NOT BE RESPONSIBLE FOR THE ACCURACY OR COMPLETENESS OF SCANNED COPIES OF THIS PLAN SHEET.*

NOTE:

FOR ACCURATE RIGHT OF WAY DATA, CONTACT RIGHT OF WAY ENGINEERING AT THE DISTRICT OFFICE.

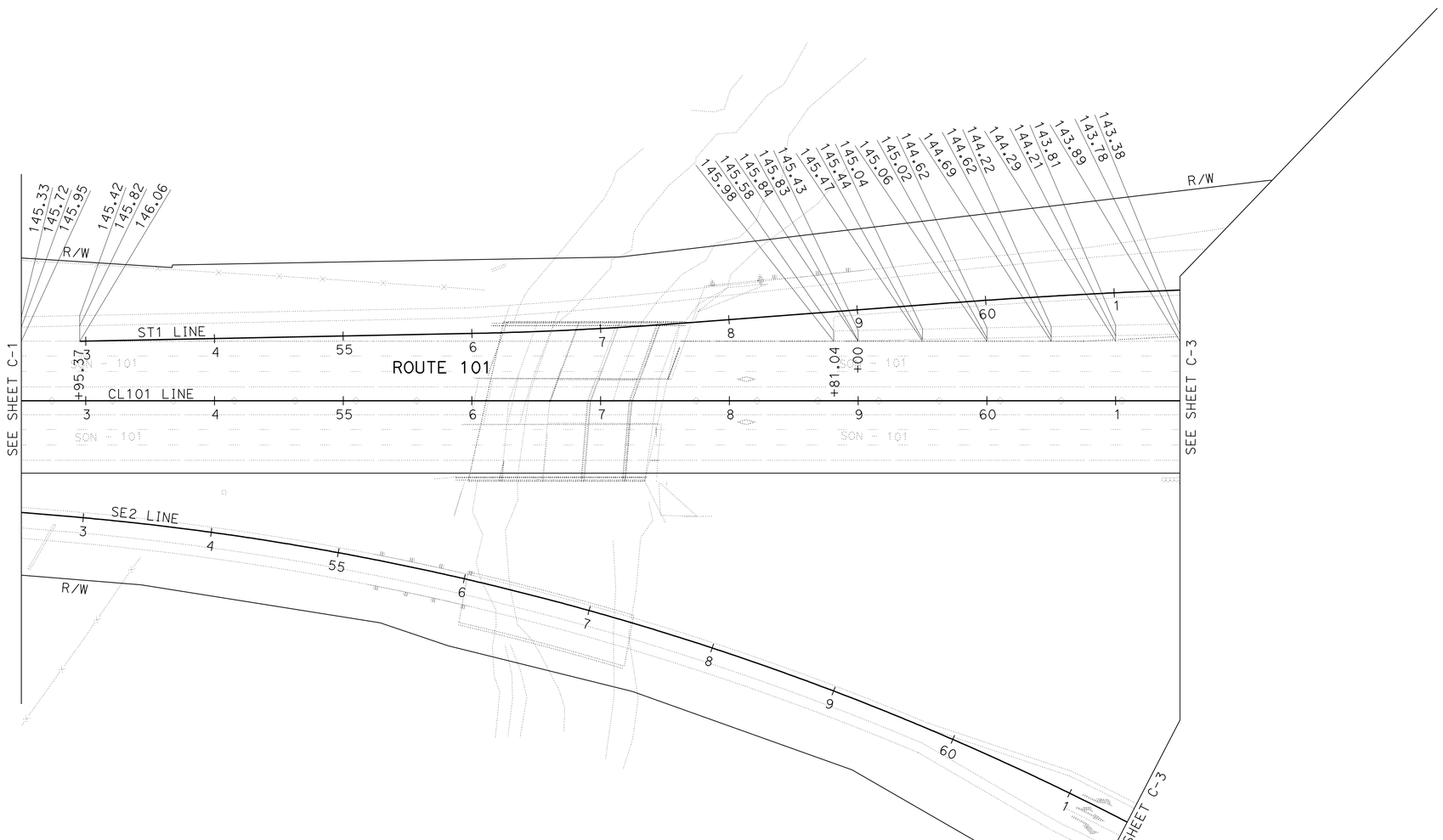


FOR NOTES, ABBREVIATIONS AND LEGEND, SEE SHEET C-1

THIS PLAN ACCURATE FOR PAVEMENT ELEVATION ONLY

# CONSTRUCTION DETAILS
## PAVEMENT ELEVATION PLAN

SCALE: 1" = 50'

C-2

STATE OF CALIFORNIA - DEPARTMENT OF TRANSPORTATION
Caltrans
DESIGN

FUNCTIONAL SUPERVISOR: JONATHAN LEE

CALCULATED-DESIGNED BY: ABEER AQRABAWI
CHECKED BY: JONATHAN LEE

REVISED BY: A
DATE REVISED: A

LAST REVISION: 06-08-11
DATE PLOTTED => 14-SEP-2012
TIME PLOTTED => 06:36

| Dist | COUNTY | ROUTE | POST MILES TOTAL PROJECT | SHEET No. | TOTAL SHEETS |
|---|---|---|---|---|---|
| 04 | Son | 101 | 25.6/29.2 | 37 | 615 |

REGISTERED CIVIL ENGINEER 8/3/11 DATE

9-10-12
PLANS APPROVAL DATE

REGISTERED PROFESSIONAL ENGINEER Fred J. Witteborn No. 56272 Exp. 12-31-12 CIVIL STATE OF CALIFORNIA

*THE STATE OF CALIFORNIA OR ITS OFFICERS OR AGENTS SHALL NOT BE RESPONSIBLE FOR THE ACCURACY OR COMPLETENESS OF SCANNED COPIES OF THIS PLAN SHEET.*

**NOTE:**
FOR ACCURATE RIGHT OF WAY DATA, CONTACT RIGHT OF WAY ENGINEERING AT THE DISTRICT OFFICE.

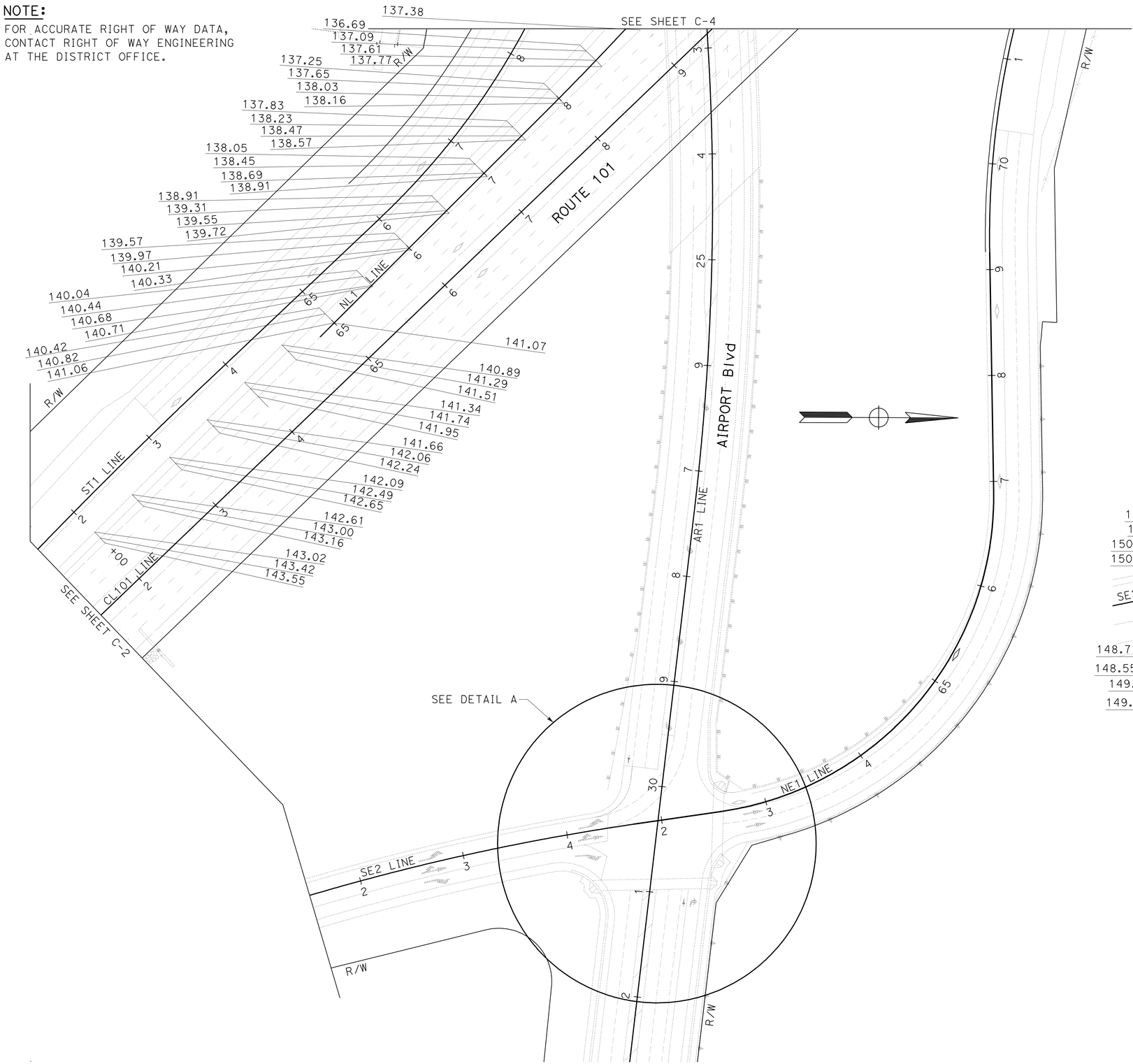


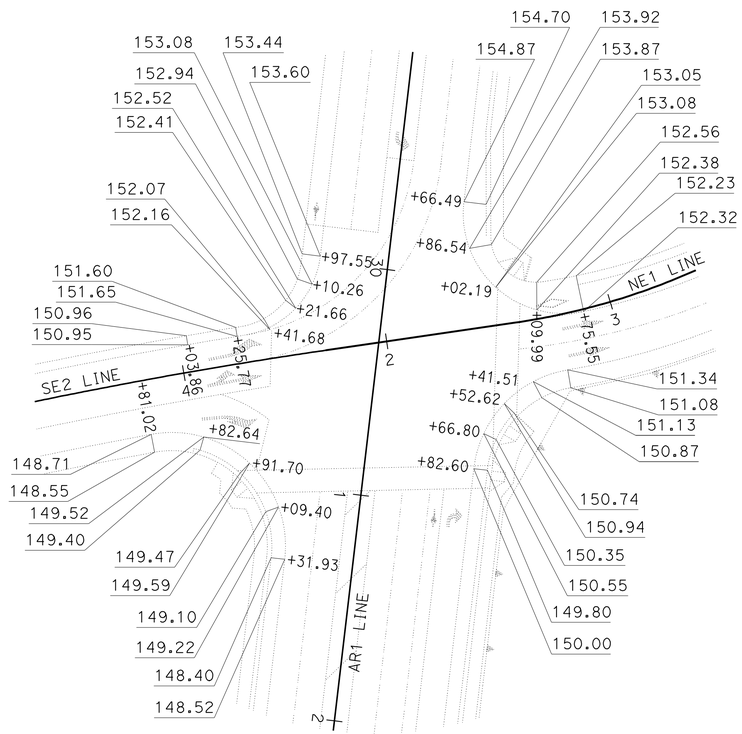


**DETAIL A**
NO SCALE

# CONSTRUCTION DETAILS
## PAVEMENT ELEVATION PLAN
SCALE: 1" = 50'

FOR NOTES, ABBREVIATIONS AND LEGEND, SEE SHEET C-1

THIS PLAN ACCURATE FOR PAVEMENT ELEVATION ONLY

**C-3**

STATE OF CALIFORNIA - DEPARTMENT OF TRANSPORTATION
Caltrans
DESIGN

FUNCTIONAL SUPERVISOR: JONATHAN LEE
CALCULATED-DESIGNED BY: ABBEER AQRABAWI
CHECKED BY: JONATHAN LEE
REVISED BY: A
DATE REVISED: A

LAST REVISION 11-21-11
DATE PLOTTED => 14-SEP-2012
TIME PLOTTED => 06:36

| Dist | COUNTY | ROUTE | POST MILES TOTAL PROJECT | SHEET No. | TOTAL SHEETS |
|---|---|---|---|---|---|
| 04 | Son | 101 | 25.6/29.2 | 38 | 615 |

REGISTERED CIVIL ENGINEER 8/3/11 DATE

9-10-12
PLANS APPROVAL DATE

REGISTERED PROFESSIONAL ENGINEER Fred J. Witteborn No. 56272 Exp. 12-31-12 CIVIL STATE OF CALIFORNIA

*THE STATE OF CALIFORNIA OR ITS OFFICERS OR AGENTS SHALL NOT BE RESPONSIBLE FOR THE ACCURACY OR COMPLETENESS OF SCANNED COPIES OF THIS PLAN SHEET.*

**NOTE:**

FOR ACCURATE RIGHT OF WAY DATA, CONTACT RIGHT OF WAY ENGINEERING AT THE DISTRICT OFFICE.

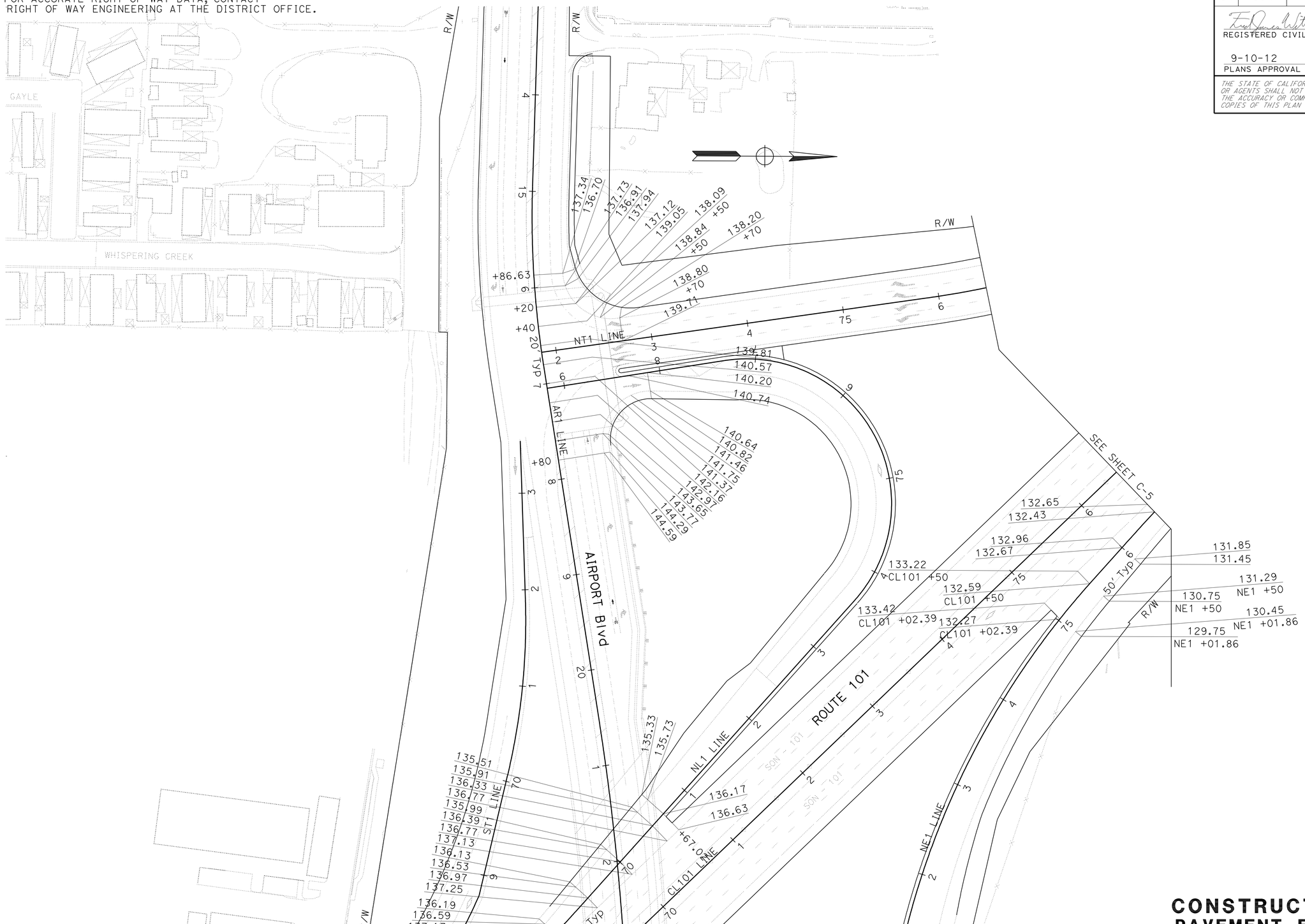


FOR NOTES, ABBREVIATIONS AND LEGEND, SEE SHEET C-1

THIS PLAN ACCURATE FOR PAVEMENT ELEVATION ONLY

# CONSTRUCTION DETAILS
## PAVEMENT ELEVATION PLAN
SCALE: 1" = 50'

**C-4**

| REVISED BY | DATE REVISED |
|---|---|
| A | A |

ABBEER AQRABAWI — JONATHAN LEE

CALCULATED-DESIGNED BY — CHECKED BY

FUNCTIONAL SUPERVISOR: JONATHAN LEE

STATE OF CALIFORNIA - DEPARTMENT OF TRANSPORTATION — Caltrans — DESIGN

LAST REVISION 06-08-11 — DATE PLOTTED => 14-SEP-2012 — TIME PLOTTED => 06:36

| Dist | COUNTY | ROUTE | POST MILES TOTAL PROJECT | SHEET No. | TOTAL SHEETS |
|---|---|---|---|---|---|
| 04 | Son | 101 | 25.6/29.2 | 39 | 615 |

REGISTERED CIVIL ENGINEER 8/3/11 DATE

9-10-12
PLANS APPROVAL DATE

REGISTERED PROFESSIONAL ENGINEER Fred J. Witteborn No. 56272 Exp. 12-31-12 CIVIL STATE OF CALIFORNIA

*THE STATE OF CALIFORNIA OR ITS OFFICERS OR AGENTS SHALL NOT BE RESPONSIBLE FOR THE ACCURACY OR COMPLETENESS OF SCANNED COPIES OF THIS PLAN SHEET.*

**NOTE:**

FOR ACCURATE RIGHT OF WAY DATA, CONTACT RIGHT OF WAY ENGINEERING AT THE DISTRICT OFFICE.

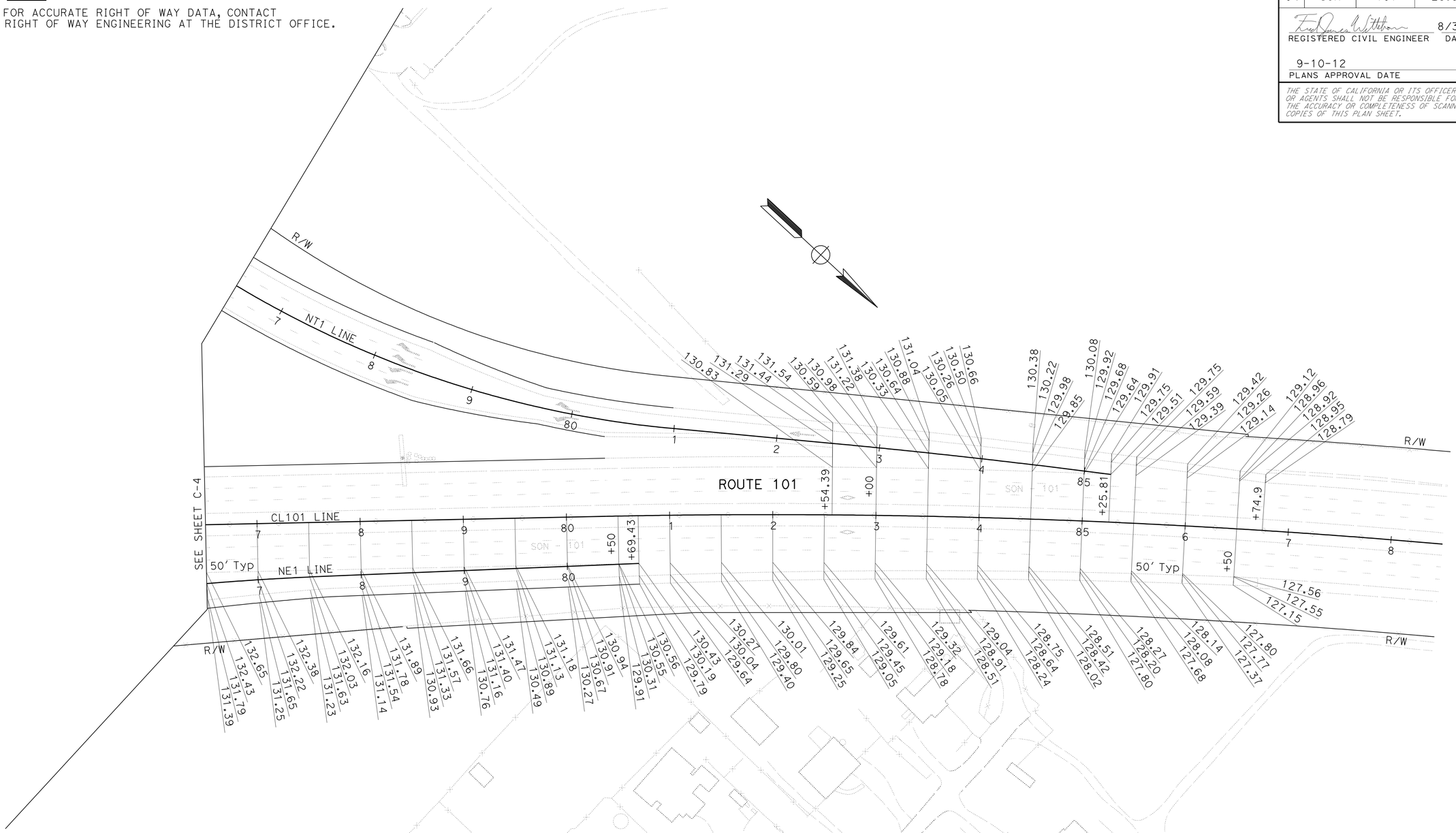


FOR NOTES, ABBREVIATIONS AND LEGEND, SEE SHEET C-1

THIS PLAN ACCURATE FOR PAVEMENT ELEVATION ONLY

# CONSTRUCTION DETAILS
## PAVEMENT ELEVATION PLAN
SCALE: 1" = 50'

C-5

STATE OF CALIFORNIA - DEPARTMENT OF TRANSPORTATION
Caltrans
DESIGN

FUNCTIONAL SUPERVISOR: JONATHAN LEE
CALCULATED-DESIGNED BY: ABBEER AQRABAWI
CHECKED BY: JONATHAN LEE
REVISED BY: A
DATE REVISED: A

LAST REVISION 06-08-11
DATE PLOTTED => 14-SEP-2012
TIME PLOTTED => 06:36

| Dist | COUNTY | ROUTE | POST MILES TOTAL PROJECT | SHEET No. | TOTAL SHEETS |
|---|---|---|---|---|---|
| 04 | Son | 101 | 25.6/29.2 | 40 | 615 |

REGISTERED CIVIL ENGINEER 8/3/11 DATE

9-10-12
PLANS APPROVAL DATE

REGISTERED PROFESSIONAL ENGINEER
Fred J. Witteborn
No. 56272
Exp. 12-31-12
CIVIL
STATE OF CALIFORNIA

*THE STATE OF CALIFORNIA OR ITS OFFICERS OR AGENTS SHALL NOT BE RESPONSIBLE FOR THE ACCURACY OR COMPLETENESS OF SCANNED COPIES OF THIS PLAN SHEET.*

NOTE:

FOR ACCURATE RIGHT OF WAY DATA, CONTACT RIGHT OF WAY ENGINEERING AT THE DISTRICT OFFICE.

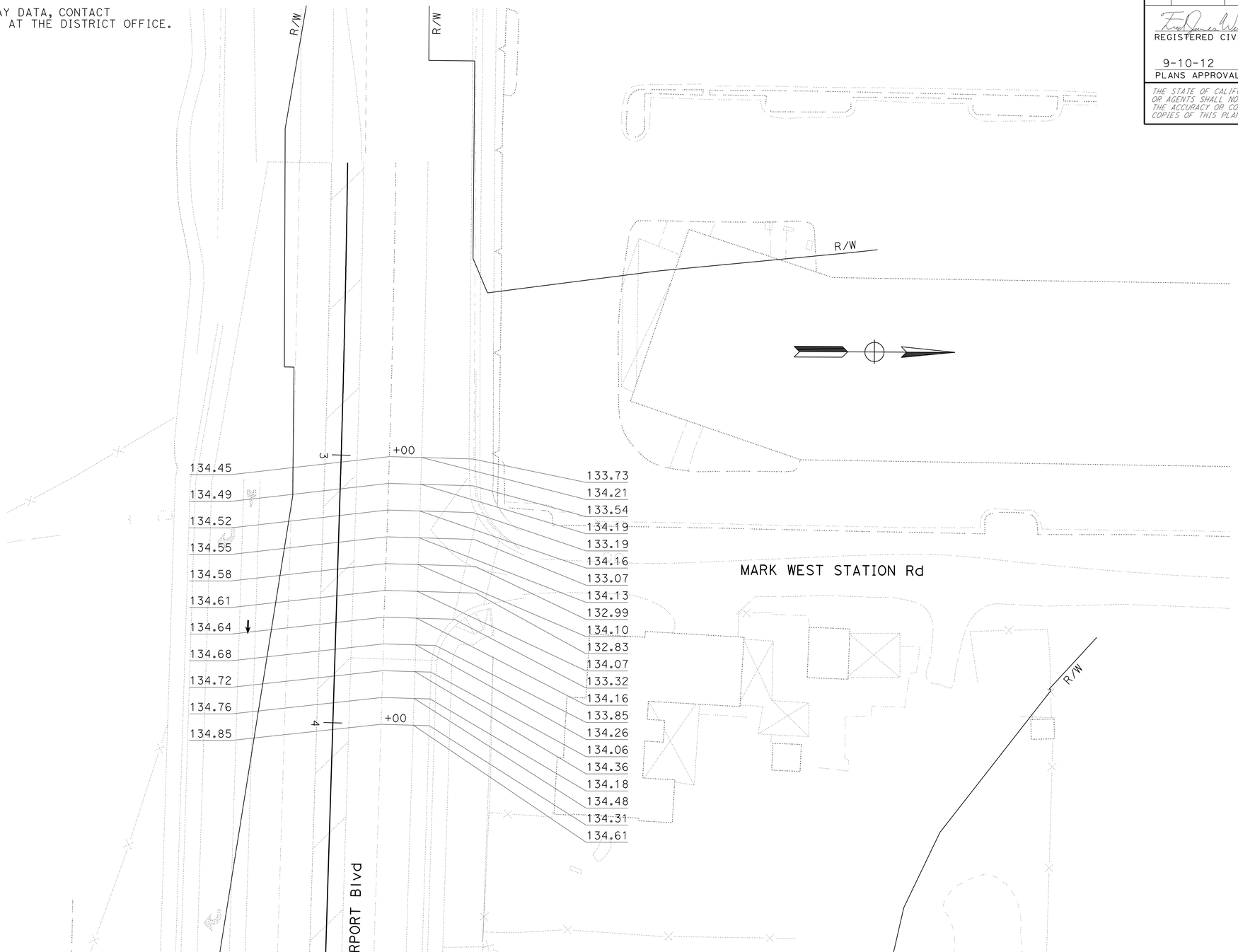


FOR NOTES, ABBREVIATIONS AND LEGEND, SEE SHEET C-1

THIS PLAN ACCURATE FOR PAVEMENT ELEVATION WORK ONLY

# CONSTRUCTION DETAILS
## PAVEMENT ELEVATION PLAN

SCALE: 1" = 20'

C-6

| REVISED BY | DATE REVISED |
|---|---|
| A | A |

ABEER AQRABAWI
JONATHAN LEE

CALCULATED-DESIGNED BY
CHECKED BY

FUNCTIONAL SUPERVISOR
JONATHAN LEE

STATE OF CALIFORNIA - DEPARTMENT OF TRANSPORTATION
Caltrans
DESIGN

LAST REVISION 06-08-11
DATE PLOTTED => 14-SEP-2012
TIME PLOTTED => 06:36

| Dist | COUNTY | ROUTE | POST MILES TOTAL PROJECT | SHEET No. | TOTAL SHEETS |
|---|---|---|---|---|---|
| 04 | Son | 101 | 25.6/29.2 | 41 | 615 |

REGISTERED CIVIL ENGINEER 8/3/11 DATE

9-10-12
PLANS APPROVAL DATE

REGISTERED PROFESSIONAL ENGINEER Fred J. Witteborn No. 56272 Exp. 12-31-12 CIVIL STATE OF CALIFORNIA

*THE STATE OF CALIFORNIA OR ITS OFFICERS OR AGENTS SHALL NOT BE RESPONSIBLE FOR THE ACCURACY OR COMPLETENESS OF SCANNED COPIES OF THIS PLAN SHEET.*

## CURVE DATA

| No. | R | Δ | T | L | N | E |
|---|---|---|---|---|---|---|
| 40 | 40.00′ | 48°43′32" | 18.11′ | 34.02′ | 1949284.12 | 6338928.81 |
| 41 | 40.00′ | 66°00′00" | 25.98′ | 46.02′ | 1949355.14 | 6338809.62 |

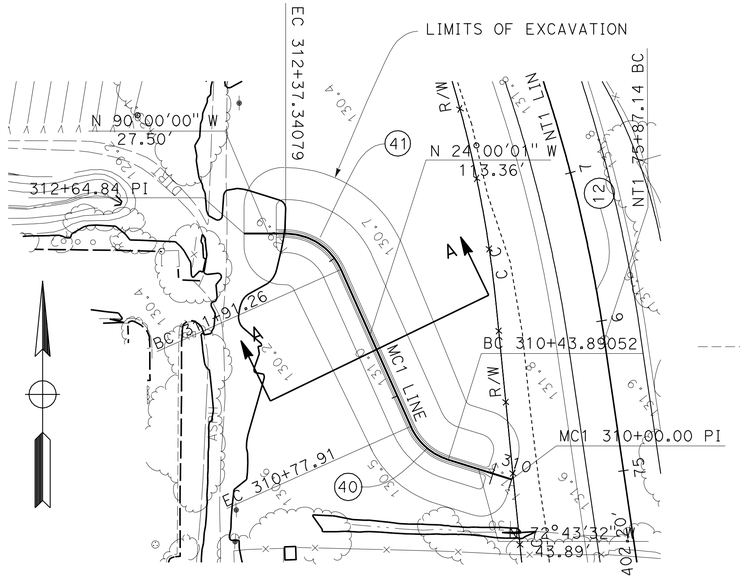


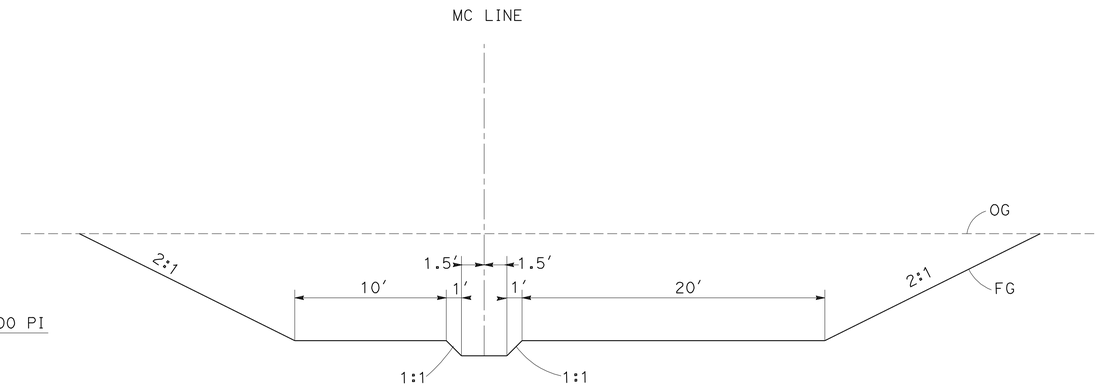


SECTION A-A

**EXCAVATION FOR MITIGATION AREA**

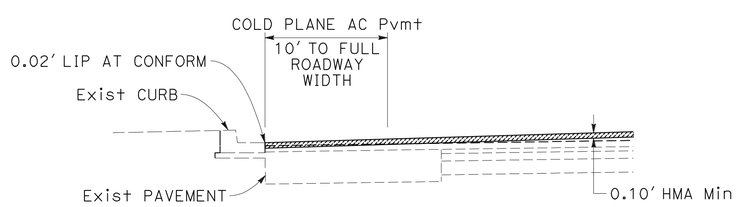


AR1 11+62.92 TO 13+10
AR1 36+24.91 TO 36+54.91

**LIP OF GUTTER CONFORM AT AIRPORT BLVD WEST CONFORM LOCATION**

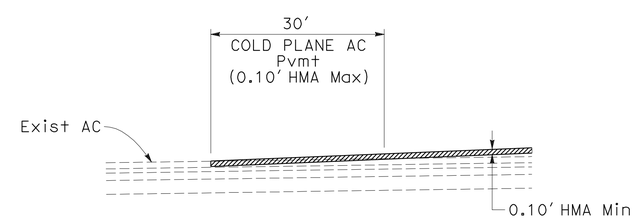


AR1 11+62.92 TO 11+92.66
AR1 36+24.91 TO 36+54.91

**PAVEMENT CONFORM ALONG AIRPORT Blvd**

# CONSTRUCTION DETAILS

NO SCALE

C-7

STATE OF CALIFORNIA - DEPARTMENT OF TRANSPORTATION
Caltrans® DESIGN

FUNCTIONAL SUPERVISOR: JONATHAN LEE
CALCULATED-DESIGNED BY: FRED WITTEBORN
CHECKED BY: JONATHAN LEE
REVISED BY: A
DATE REVISED: A

LAST REVISION 11-21-11
DATE PLOTTED => 14-SEP-2012
TIME PLOTTED => 07:33

| Dist | COUNTY | ROUTE | POST MILES TOTAL PROJECT | SHEET No. | TOTAL SHEETS |
|---|---|---|---|---|---|
| 04 | Son | 101 | 25.6/29.2 | 42 | 615 |

REGISTERED CIVIL ENGINEER 8/3/11 DATE

9-10-12
PLANS APPROVAL DATE

REGISTERED PROFESSIONAL ENGINEER Fred J. Witteborn No. 56272 Exp. 12-31-12 CIVIL STATE OF CALIFORNIA

*THE STATE OF CALIFORNIA OR ITS OFFICERS OR AGENTS SHALL NOT BE RESPONSIBLE FOR THE ACCURACY OR COMPLETENESS OF SCANNED COPIES OF THIS PLAN SHEET.*

NOTE:

FOR ACCURATE RIGHT OF WAY DATA, CONTACT RIGHT OF WAY ENGINEERING AT THE DISTRICT OFFICE.

**LEGEND**

GROUND IMPROVEMENT

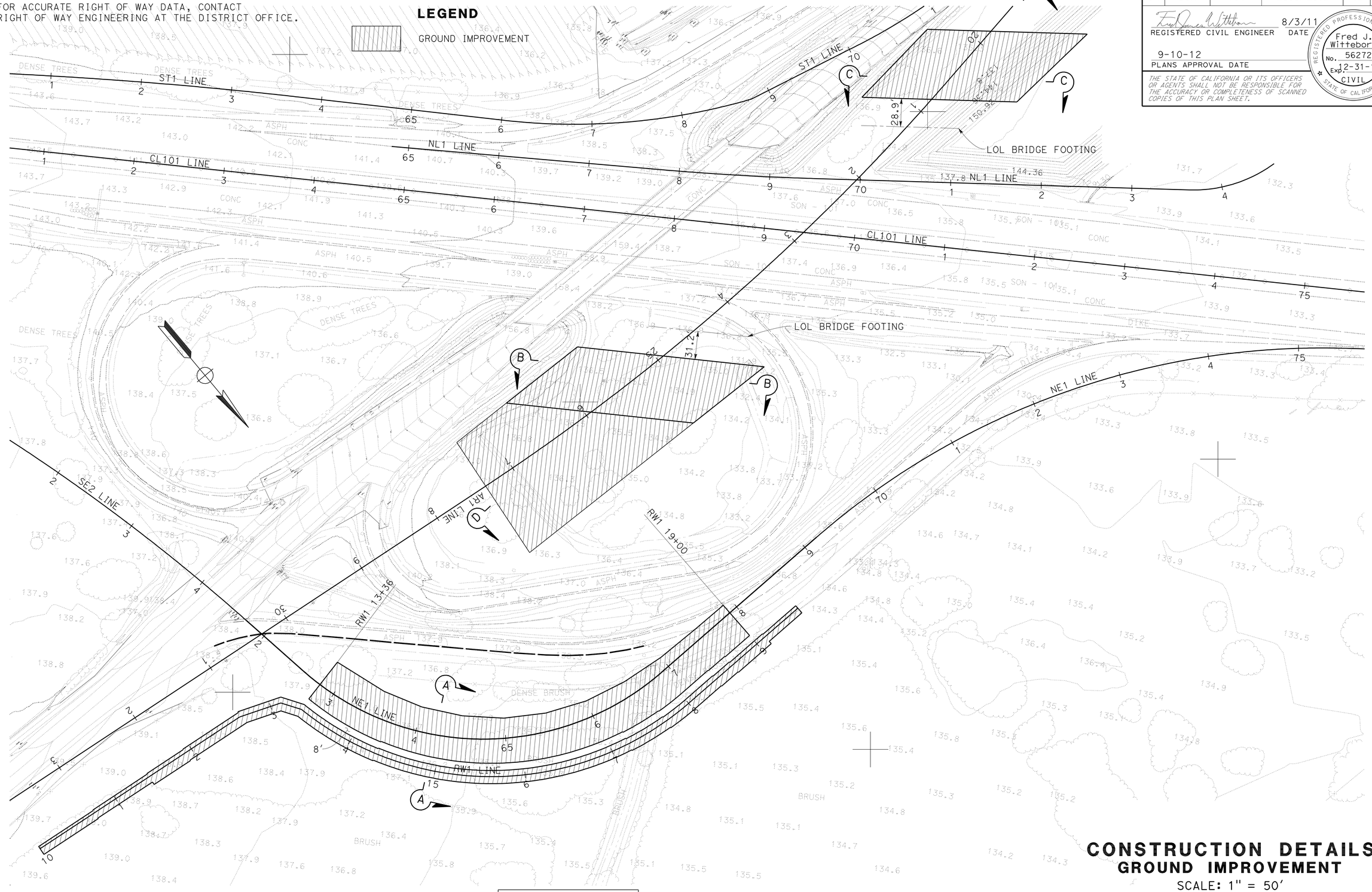


FOR NOTES, ABBREVIATIONS AND LEGEND, SEE SHEET C-1

THIS PLAN ACCURATE FOR PAVEMENT ELEVATION WORK ONLY

# CONSTRUCTION DETAILS
## GROUND IMPROVEMENT

SCALE: 1" = 50'

C-8

STATE OF CALIFORNIA - DEPARTMENT OF TRANSPORTATION
Caltrans
DESIGN

FUNCTIONAL SUPERVISOR: JONATHAN LEE
CALCULATED-DESIGNED BY: FRED WITTEBORN
CHECKED BY: HOOSHMAND NIKOUI
REVISED BY: A
DATE REVISED: A

LAST REVISION 06-09-11
DATE PLOTTED => 14-SEP-2012
TIME PLOTTED => 06:36

| Dist | COUNTY | ROUTE | POST MILES TOTAL PROJECT | SHEET No. | TOTAL SHEETS |
|---|---|---|---|---|---|
| 04 | Son | 101 | 25.6/29.2 | 43 | 615 |

REGISTERED CIVIL ENGINEER 8/3/11 DATE

9-10-12
PLANS APPROVAL DATE

REGISTERED PROFESSIONAL ENGINEER Fred J. Witteborn No. 56272 Exp. 12-31-12 CIVIL STATE OF CALIFORNIA

*THE STATE OF CALIFORNIA OR ITS OFFICERS OR AGENTS SHALL NOT BE RESPONSIBLE FOR THE ACCURACY OR COMPLETENESS OF SCANNED COPIES OF THIS PLAN SHEET.*

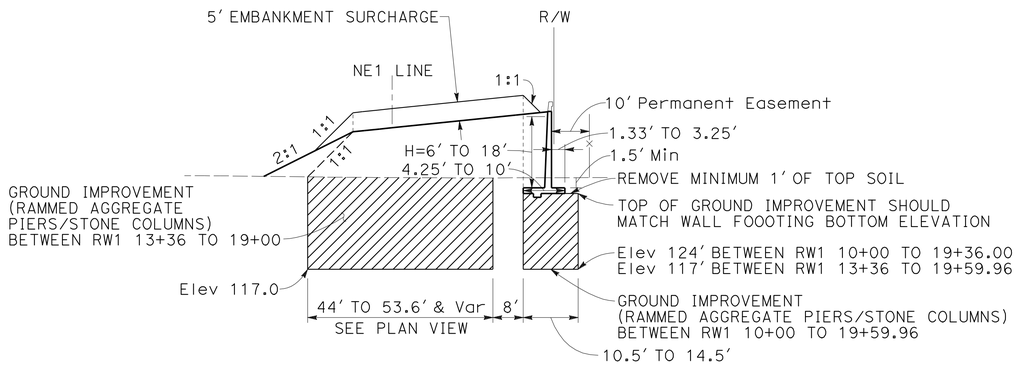


SECTION A-A

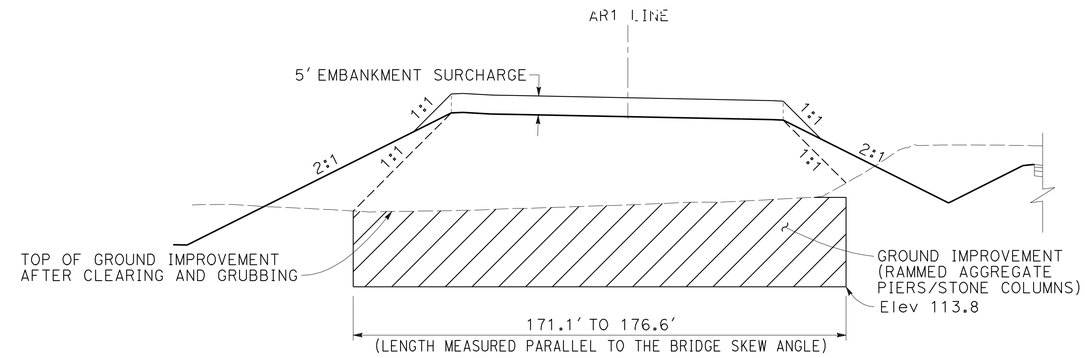


WEST APPROACH AR1 19+84.83 TO 20+84.83
SECTION C-C

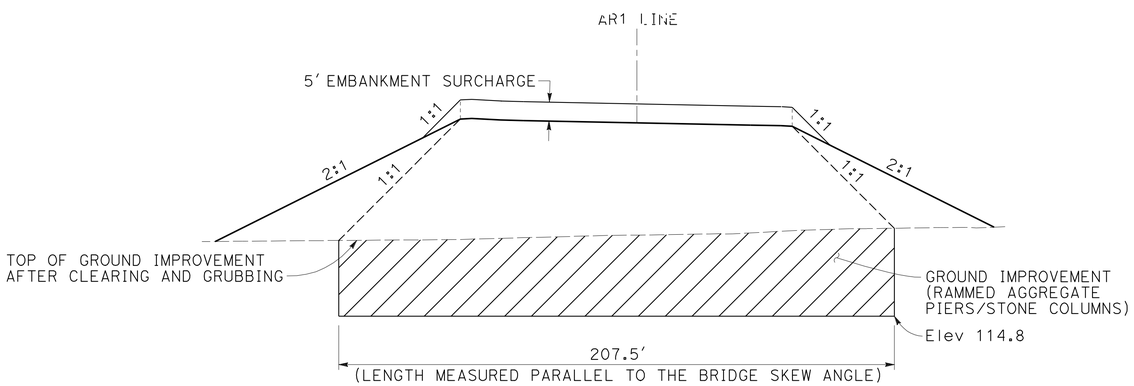


EAST APPROACH AR1 24+92.64 TO 271+23.00
SECTION B-B

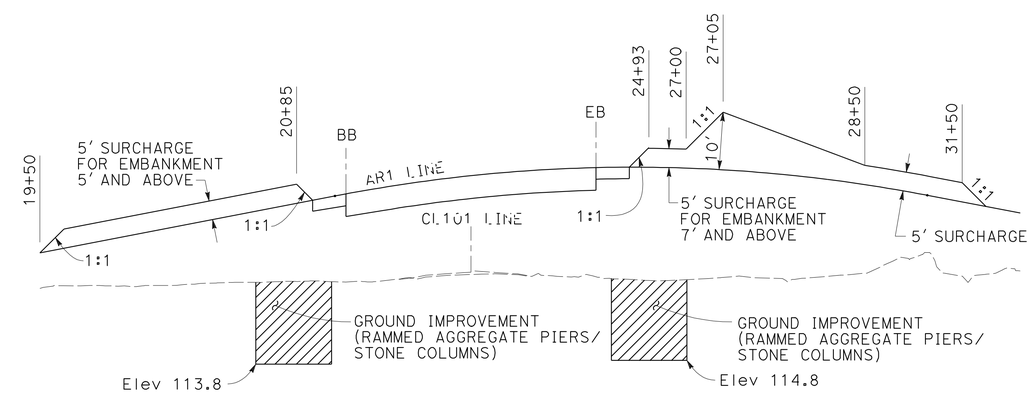


WEST APPROACH
AR1 19+84.83 TO 20+84.83

EAST APPROACH
AR1 24+92.64 TO 27+23.00

SECTION D-D

# CONSTRUCTION DETAILS
## GROUND IMPROVEMENT
NO SCALE

C-9

STATE OF CALIFORNIA - DEPARTMENT OF TRANSPORTATION
Caltrans
DESIGN

FUNCTIONAL SUPERVISOR: JONATHAN LEE
CALCULATED-DESIGNED BY: FRED WITTEBORN
CHECKED BY: HOOSHMAND NIKOUI
REVISED BY: A
DATE REVISED: A

LAST REVISION 12-07-11
DATE PLOTTED => 14-SEP-2012
TIME PLOTTED => 06:37

| Dist | COUNTY | ROUTE | POST MILES TOTAL PROJECT | SHEET No. | TOTAL SHEETS |
|---|---|---|---|---|---|
| 04 | Son | 101 | 25.6/29.2 | 44 | 615 |

REGISTERED CIVIL ENGINEER 8/3/11 DATE

9-10-12
PLANS APPROVAL DATE

REGISTERED PROFESSIONAL ENGINEER Fred J. Witteborn No. 56272 Exp. 12-31-12 CIVIL STATE OF CALIFORNIA

*THE STATE OF CALIFORNIA OR ITS OFFICERS OR AGENTS SHALL NOT BE RESPONSIBLE FOR THE ACCURACY OR COMPLETENESS OF SCANNED COPIES OF THIS PLAN SHEET.*

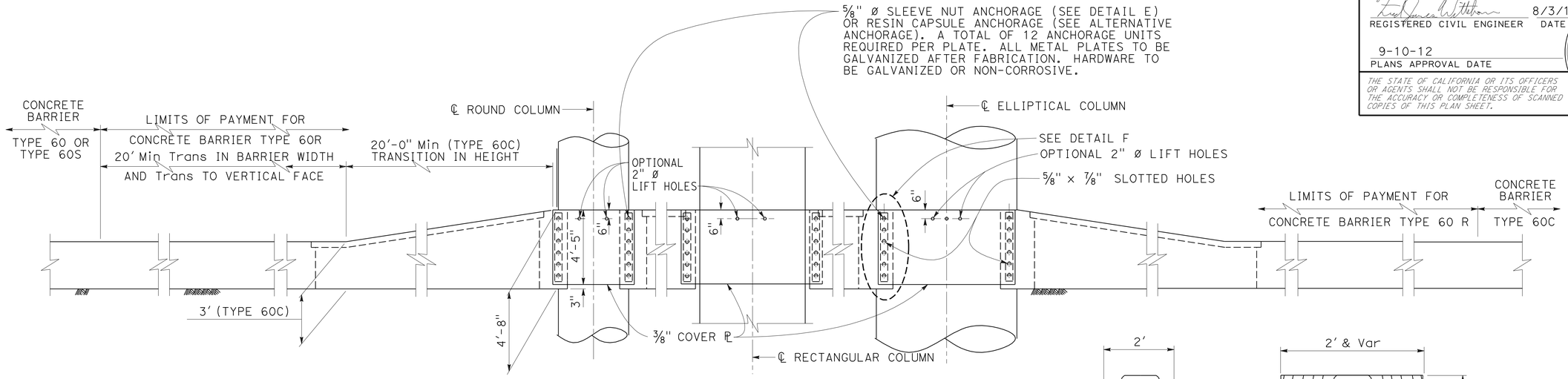


ELEVATION

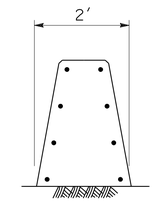


SECTION A-A

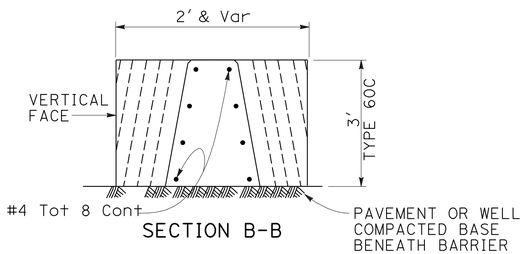


SECTION B-B

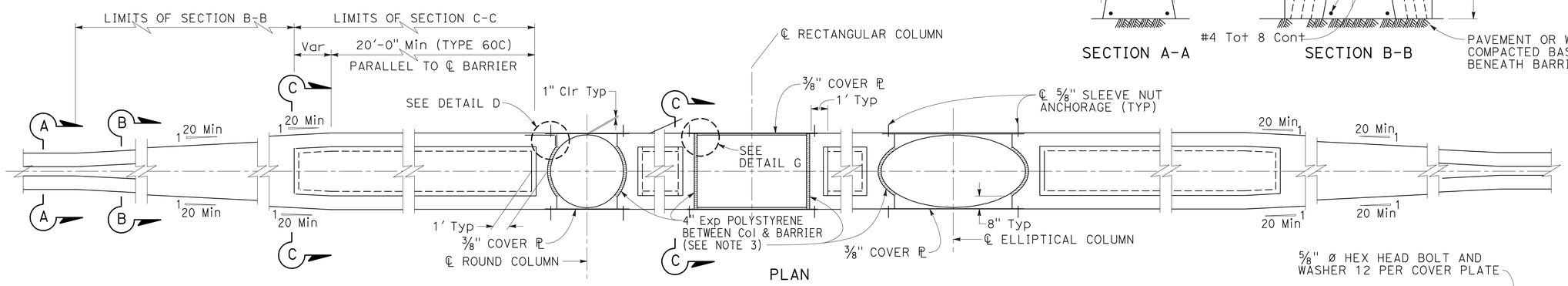


PLAN

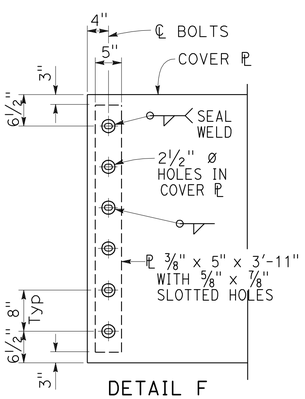


DETAIL F

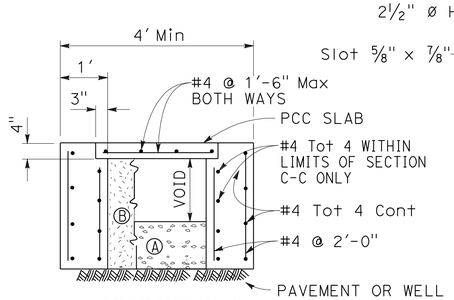


SECTION C-C

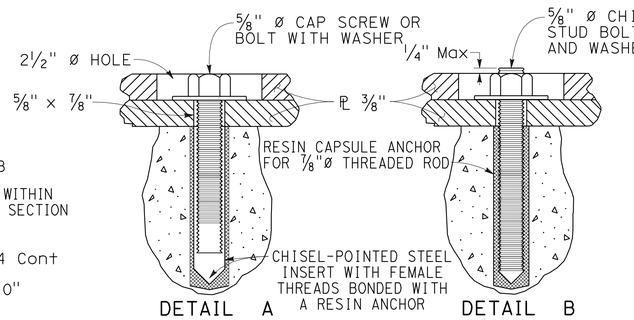


ALTERNATIVE ANCHORAGE

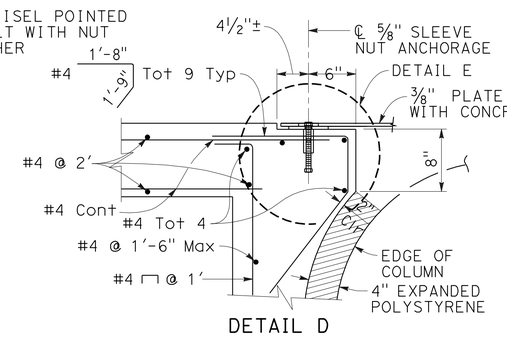


DETAIL D

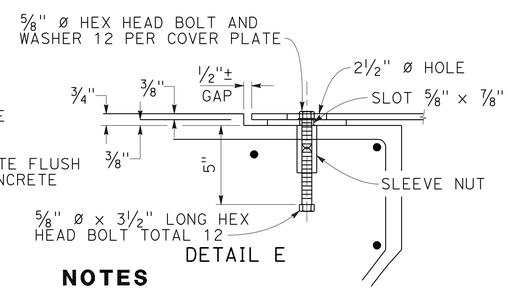


DETAIL E

## NOTES

1. RESIN CAPSULE ANCHORAGE IS SUBJECT TO APPROVAL OF THE ENGINEER. INSTALLATION PROCEDURES SHALL COMPLY WITH MANUFACTURER'S INSTRUCTIONS.
2. DETAIL B SIMILAR TO DETAIL A EXCEPT FOR ANCHORAGE DEVICES.
3. FOR CONCRETE BARRIER (TYPE 60C) DETAILS, SEE STANDARD PLANS A76A.

## NOTES

1. CONTRACTOR OPTIONS FOR FILL BETWEEN BARRIER WALLS.
   - (A) PLACE 2' PCC AT BASE BETWEEN BARRIER WALLS.
   - (B) PLACE GRANULAR MATERIAL FROM BASE TO BOTTOM OF 4" CAP.
2. FORMING MATERIAL FOR 4" CAP MAY REMAIN IN PLACE.
3. ENCLOSE COLUMN WITH 4" EXPANDED POLYSTYRENE AT LOCATIONS WHERE CONCRETE OR CEMENT TREATED BASE ENCASES THE COLUMN.
4. FOR DETAIL G, SEE TRANSITION AT BRIDGE COLUMN SHEET C-11.
5. FOR Conc BARRIER (TYPE 60C) DETAILS SEE Std PLAN A76A.

# CONSTRUCTION DETAILS
## CONCRETE BARRIER TYPE 60R

NO SCALE

C-10

| REVISED BY | DATE REVISED |
|---|---|
| A | A |

FRED WITTEBORN — JONATHAN LEE
CALCULATED-DESIGNED BY — CHECKED BY
FUNCTIONAL SUPERVISOR — JONATHAN LEE

STATE OF CALIFORNIA - DEPARTMENT OF TRANSPORTATION
Caltrans® DESIGN

LAST REVISION 12-07-11 | DATE PLOTTED => 14-SEP-2012 | TIME PLOTTED => 06:37

| Dist | COUNTY | ROUTE | POST MILES TOTAL PROJECT | SHEET No. | TOTAL SHEETS |
|---|---|---|---|---|---|
| 04 | Son | 101 | 25.6/29.2 | 45 | 615 |

REGISTERED CIVIL ENGINEER 8/3/11 DATE

9-10-12
PLANS APPROVAL DATE

REGISTERED PROFESSIONAL ENGINEER Fred J. Witteborn No. 56272 Exp. 12-31-12 CIVIL STATE OF CALIFORNIA

*THE STATE OF CALIFORNIA OR ITS OFFICERS OR AGENTS SHALL NOT BE RESPONSIBLE FOR THE ACCURACY OR COMPLETENESS OF SCANNED COPIES OF THIS PLAN SHEET.*

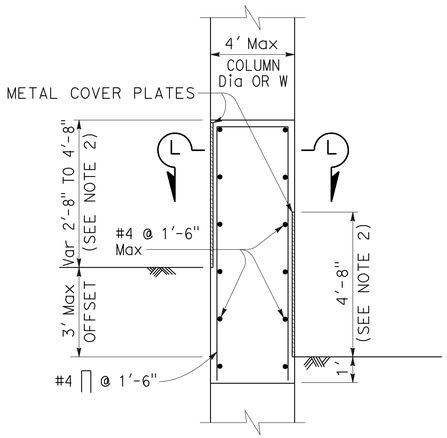


TYPICAL SECTION
ROADWAY OFFSET 3' OR LESS
COLUMN WIDTH LESS THAN 4'

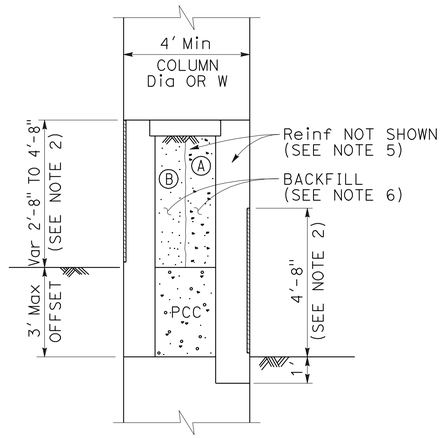


TYPICAL SECTION
ROADWAY OFFSET 3' OR LESS
COLUMN WIDTH LESS THAN 4'

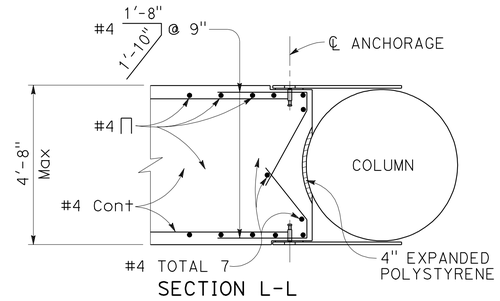


SECTION L-L

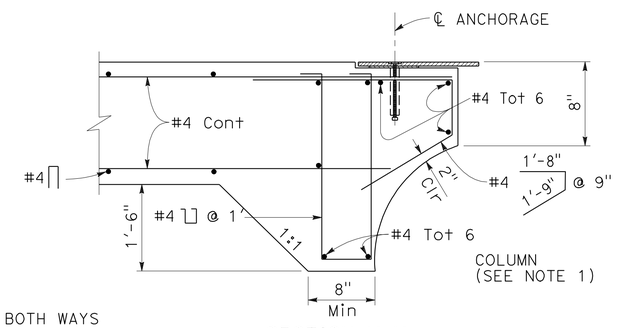


SECTION M-M

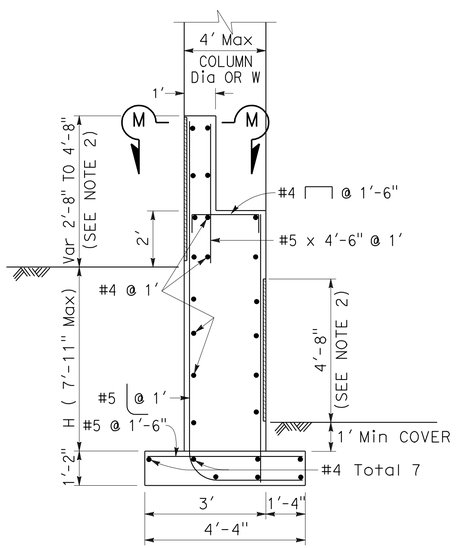


TYPICAL SECTION
ROADWAY OFFSETS GREATER THAN 3'
COLUMN WIDTHS 4'-4" OR LESS

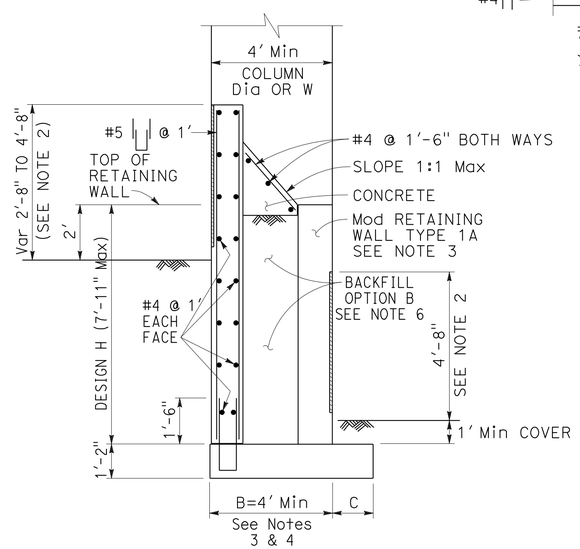


TYPICAL SECTION
ROADWAY OFFSETS GREATER THAN 3'
COLUMN WIDTHS 4' OR LESS

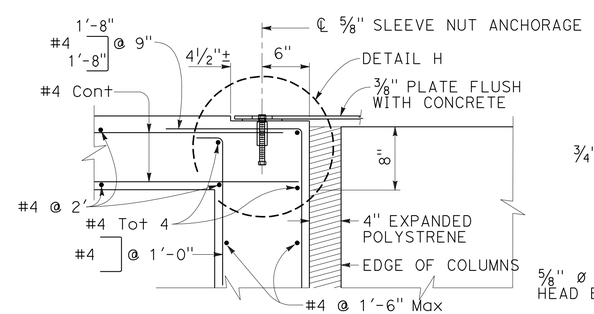


DETAIL G

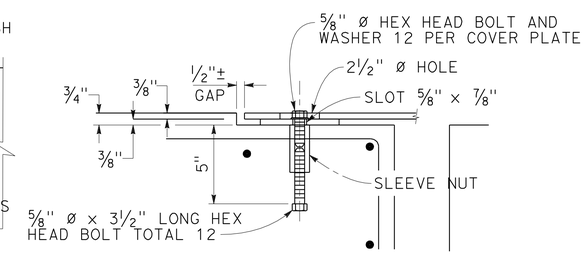


DETAIL H

## NOTES

1. THESE DETAILS ARE TO BE COMBINED WITH (CONCRETE BARRIER TYPE 60R) SHEET C-10. DETAILS NOT INDICATED ARE SIMILAR TO THE DETAILS SHOWN ELSEWHERE ON SHEET.
2. METAL PLATE DETAILS AT COLUMNS SHOWN ON (CONCRETE BARRIER TYPE 60R) SHEET C-10.
3. FOR RETAINING WALL TYPE 1A DETAILS, SEE STANDARD PLANS.
4. EXTEND RETAINING WALL FOOTING DIMENSION "B" TO SATISFY COLUMN WIDTH AS INDICATED.
5. EXTEND REINFORCEMENT AS SHOWN IN SECTION C-C ON (CONCRETE BARRIER TYPE 60R) SHEET C-10.
6. CONTRACTOR OPTIONS FOR FILL BETWEEN BARRIER WALLS:
   - (A) PLACE PCC BETWEEN BARRIER WALLS, MAY BE PLACED MONOLITHIC.
   - (B) PLACE GRANULAR MATERIAL FROM BASE TO BOTTOM OF CONCRETE CAP.

# CONSTRUCTION DETAILS
## CONCRETE BARRIER TYPE 60R
NO SCALE

FOR NOTES, ABBREVIATIONS AND LEGEND, SEE SHEET C-1

THIS PLAN ACCURATE FOR PAVEMENT ELEVATION WORK ONLY

C-11

| REVISED BY | DATE REVISED |
|---|---|
| A | A |

FRED WITTEBORN — CALCULATED-DESIGNED BY
JONATHAN LEE — CHECKED BY
FUNCTIONAL SUPERVISOR
JONATHAN LEE

STATE OF CALIFORNIA - DEPARTMENT OF TRANSPORTATION
Caltrans®
DESIGN

LAST REVISION 06-08-11 | DATE PLOTTED => 14-SEP-2012 | TIME PLOTTED => 06:37

| Dist | COUNTY | ROUTE | POST MILES TOTAL PROJECT | SHEET No. | TOTAL SHEETS |
|---|---|---|---|---|---|
| 04 | Son | 101 | 25.6/29.2 | 46 | 615 |

REGISTERED CIVIL ENGINEER 8/3/11 DATE

9-10-12
PLANS APPROVAL DATE

REGISTERED PROFESSIONAL ENGINEER Fred J. Witteborn No. 56272 Exp. 12-31-12 CIVIL STATE OF CALIFORNIA

*THE STATE OF CALIFORNIA OR ITS OFFICERS OR AGENTS SHALL NOT BE RESPONSIBLE FOR THE ACCURACY OR COMPLETENESS OF SCANNED COPIES OF THIS PLAN SHEET.*

## NOTE

BORING IN THE AREAS OF ADL REPLACEMENT INDICATE GROUNDWATER AT 128'.

## LEGEND

EXISTING AERIALLY DEPOSITED LEAD STOCKPILE

AERIALLY DEPOSITED LEAD PLACEMENT

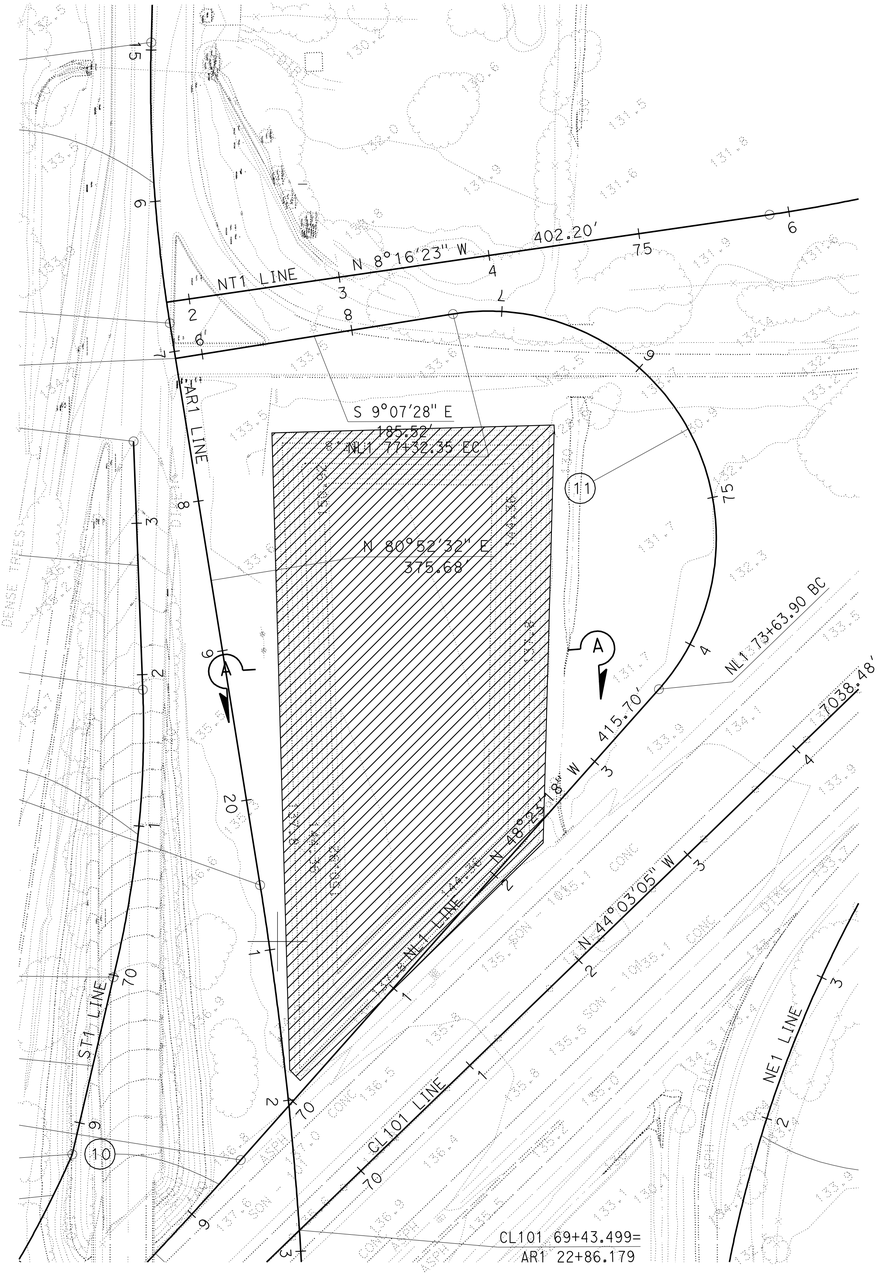


**AERIALLY DEPOSITED LEAD MATERIAL (TYPE Y-1)**

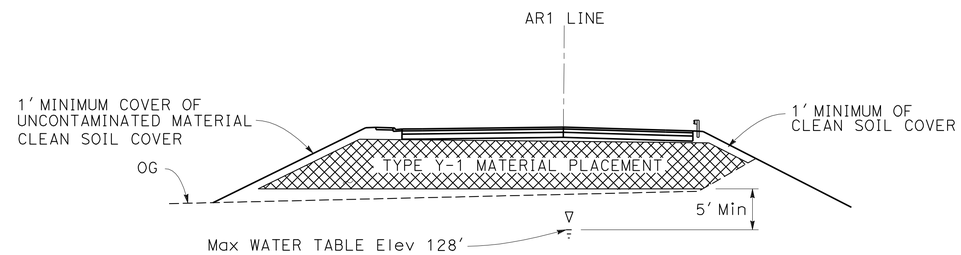


**PLACEMENT OF ADL MATERIALS (TYPE Y-1)**

AR1 19+00 TO 21+00
AR1 25+00 TO 27+35

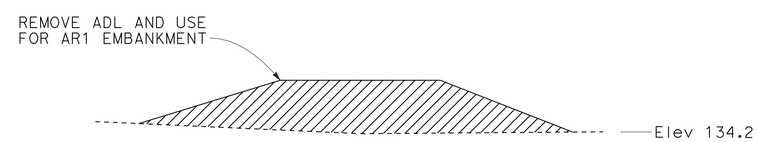


SECTION A-A
**EXCAVATION OF ADL MATERIALS**

# CONSTRUCTION DETAILS

NO SCALE

FOR NOTES, ABBREVIATIONS AND LEGEND, SEE SHEET C-1

THIS PLAN ACCURATE FOR PAVEMENT ELEVATION WORK ONLY

C-12

STATE OF CALIFORNIA - DEPARTMENT OF TRANSPORTATION
Caltrans
DESIGN

FUNCTIONAL SUPERVISOR: JONATHAN LEE
CALCULATED-DESIGNED BY: FRED WITTEBORN
CHECKED BY: JONATHAN LEE
REVISED BY: A
DATE REVISED: A

LAST REVISION 06-08-11
DATE PLOTTED => 14-SEP-2012
TIME PLOTTED => 06:37

| Dist | COUNTY | ROUTE | POST MILES TOTAL PROJECT | SHEET No. | TOTAL SHEETS |
|---|---|---|---|---|---|
| 04 | Son | 101 | 25.6/29.2 | 47 | 615 |

REGISTERED CIVIL ENGINEER 12/20/11 DATE

9-10-12
PLANS APPROVAL DATE

REGISTERED PROFESSIONAL ENGINEER
Fred J. Witteborn
No. 56272
Exp. 12-31-12
CIVIL
STATE OF CALIFORNIA

*THE STATE OF CALIFORNIA OR ITS OFFICERS OR AGENTS SHALL NOT BE RESPONSIBLE FOR THE ACCURACY OR COMPLETENESS OF SCANNED COPIES OF THIS PLAN SHEET.*

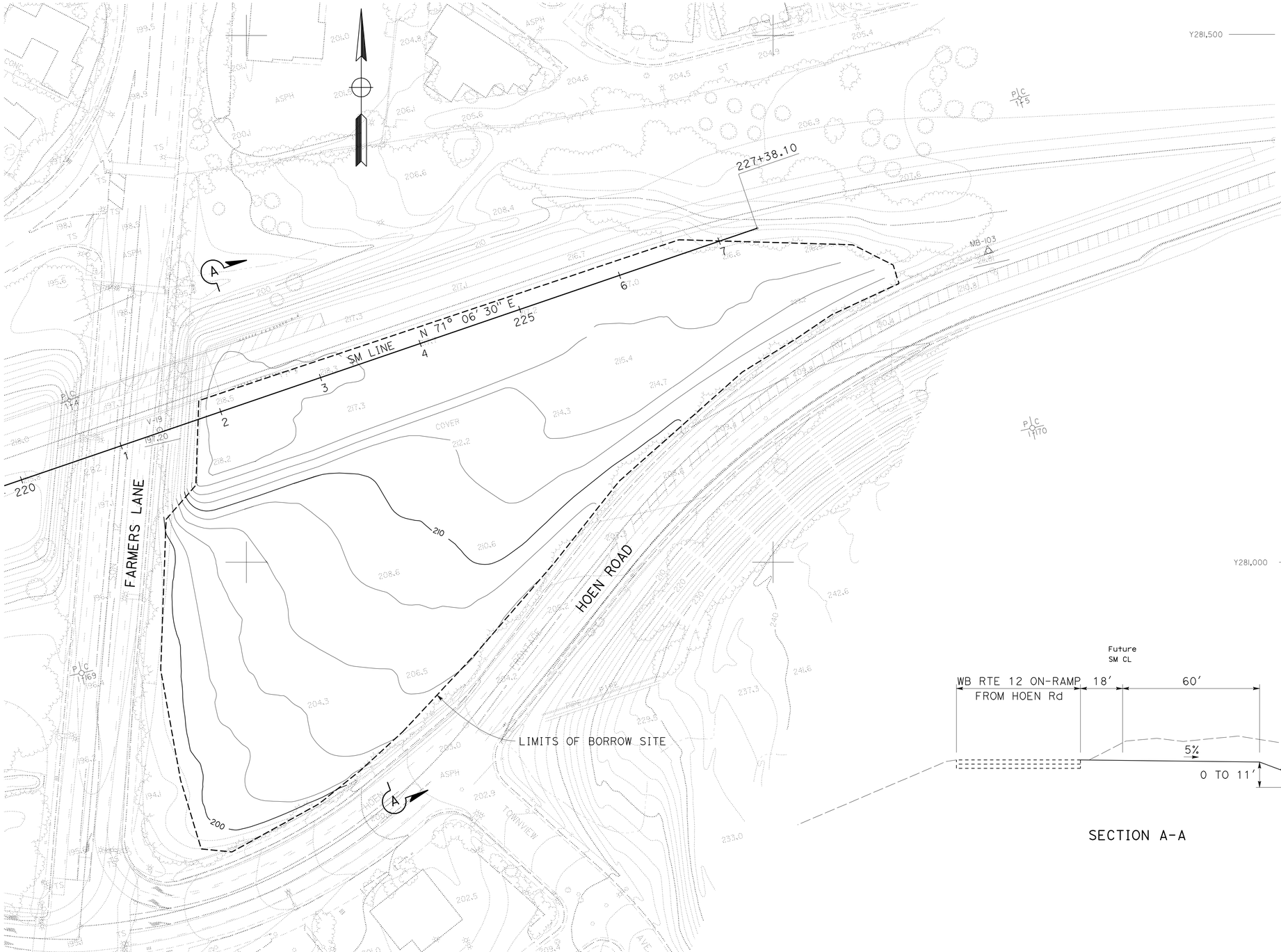


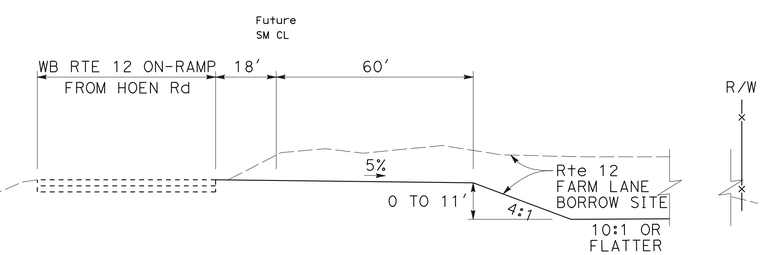


SECTION A-A

# CONSTRUCTION DETAILS

NO SCALE

C-13

STATE OF CALIFORNIA - DEPARTMENT OF TRANSPORTATION
Caltrans
DESIGN

FUNCTIONAL SUPERVISOR: JONATHAN LEE
CALCULATED-DESIGNED BY: FRED WITTEBORN
CHECKED BY: JONATHAN LEE
REVISED BY: A
DATE REVISED: A

LAST REVISION 12-20-11
DATE PLOTTED => 14-SEP-2012
TIME PLOTTED => 06:37

| Dist | COUNTY | ROUTE | POST MILES TOTAL PROJECT | SHEET No. | TOTAL SHEETS |
|---|---|---|---|---|---|
| 04 | Son | 101 | 25.6/29.2 | 48 | 615 |

REGISTERED CIVIL ENGINEER 8/3/11 DATE

9-10-12
PLANS APPROVAL DATE

REGISTERED PROFESSIONAL ENGINEER Fred J. Witteborn No. 56272 Exp. 12-31-12 CIVIL STATE OF CALIFORNIA

*THE STATE OF CALIFORNIA OR ITS OFFICERS OR AGENTS SHALL NOT BE RESPONSIBLE FOR THE ACCURACY OR COMPLETENESS OF SCANNED COPIES OF THIS PLAN SHEET.*

## NOTES

1. FILL HOLE APPROXIMATELY 2/3 FULL WITH EPOXY AND INSERT CABLE INTO HOLE UNTIL IT REACHES BOTTOM.
2. CUT NOTCHES AT THE LOCATION WHERE THE LOG SPUR WITH ROOT WAD OVERLAPS THE FOOTER LOG TO PREVENT EXCESSIVE GAPS AND ENSURE A STABLE JOINT.
3. WILLOW CUTTINGS SHALL EXTEND BACK TO THE LIMIT OF EXCAVATION AND NO MORE THAN 2 FEET BEYOND FINISH GRADE.

LEGEND

ROLLED EROSION CONTROL PRODUCT (NETTING)

# PLANT LIST AND PLANTING SPECIFICATIONS

| PLANT GROUP | PLANT No. | SYMBOL | BOTANICAL NAME | COMMON NAME | SIZE | QUANTITY EACH | HOLE SIZE (INCH) Dia | HOLE SIZE (INCH) DEPTH | BASIN TYPE | IRON SULFATE ① | SOIL AMEND ① | COMMERCIAL FERTILIZER ① PLANTING | COMMERCIAL FERTILIZER ① PLT ESTB | BASIN MULCH (CY) | STAKING | PLANTING LIMITS MINIMUM DISTANCE (ft) FROM ETW | Pvmt | FENCE | WALL | PAVED DITCH | EARTH DITCH | ON CENTER (ft) | REMARKS |
|---|---|---|---|---|---|---|---|---|---|---|---|---|---|---|---|---|---|---|---|---|---|---|---|
| W | 1 | | SALIX SSP. | WILLOW | CUTTING | 700 | ② | | — | — | — | 1 Pk† | — | — | — | 40 | — | — | — | — | — | 0.15 | TREE |

**APPLICABLE WHEN CIRCLED:**

① - QUANTITIES SHOWN ARE "PER PLANT" UNLESS SHOWN AS SQFT OR SQYD APPLICATION RATES

② - AS SHOWN ON PLANS

NOTE:

UNDERLINED PORTIONS OF BOTANICAL NAME INDICATE ABBREVIATIONS USED ON PLANTING PLANS.

SCALE 1" = 10'

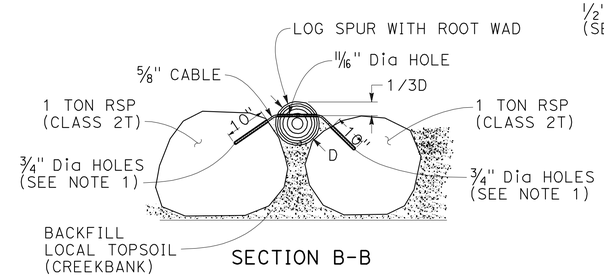


SECTION B-B

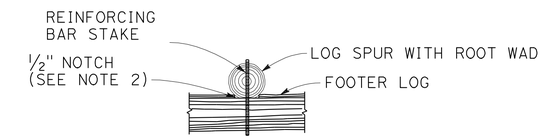


SECTION C-C

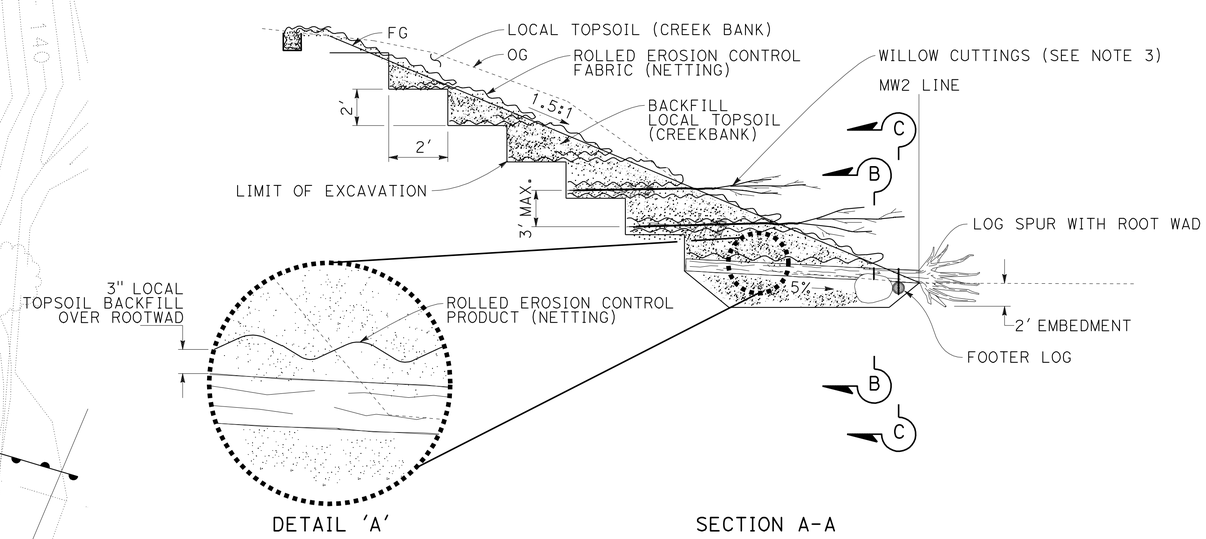


DETAIL 'A'

SECTION A-A

# CONSTRUCTION DETAILS
## CREEK BANK STABILIZATION
NO SCALE

FOR NOTES, ABBREVIATIONS AND LEGEND, SEE SHEET C-1

THIS PLAN ACCURATE FOR PAVEMENT ELEVATION WORK ONLY

C-14

STATE OF CALIFORNIA - DEPARTMENT OF TRANSPORTATION
Caltrans
DESIGN

FUNCTIONAL SUPERVISOR: JONATHAN LEE
CALCULATED-DESIGNED BY: FRED WITTEBORN
CHECKED BY: JONATHAN LEE
REVISED BY: A
DATE REVISED: A

LAST REVISION 06-08-11
DATE PLOTTED => 13-SEP-2012
TIME PLOTTED => 13:30

| DIST | COUNTY | ROUTE | POST MILES TOTAL PROJECT | SHEET No | TOTAL SHEETS |
|---|---|---|---|---|---|
| 04 | Son | 101 | 25.6/29.2 | 49 | 615 |

REGISTERED CIVIL ENGINEER 12-09-11

9-10-12
PLANS APPROVAL DATE

REGISTERED PROFESSIONAL ENGINEER Samuel Awad No. 64589 Exp. 6-30-13 CIVIL STATE OF CALIFORNIA

*The State of California or its officers or agents shall not be responsible for the accuracy or completeness of electronic copies of this plan sheet.*

This LOTB sheet was prepared in accordance with the Caltrans Soil & Rock Logging, Classification, & Presentation Manual (2010 Edition).

## BENCH MARK

S116
Standard Bronze Disk
492.344' Rt. "CL101" Line, ℄ Rte. 101
Sta 63+52.43
N 1,948,932.008
E 6,340,455.452
Elev. 139.393

S111
Standard Bronze Disk
Set on walkway of Fulton Rd. O/C Br.
Sta. 45+19.32
N 1.947,274.458
E 6,341,378.505
Elev. 165.515

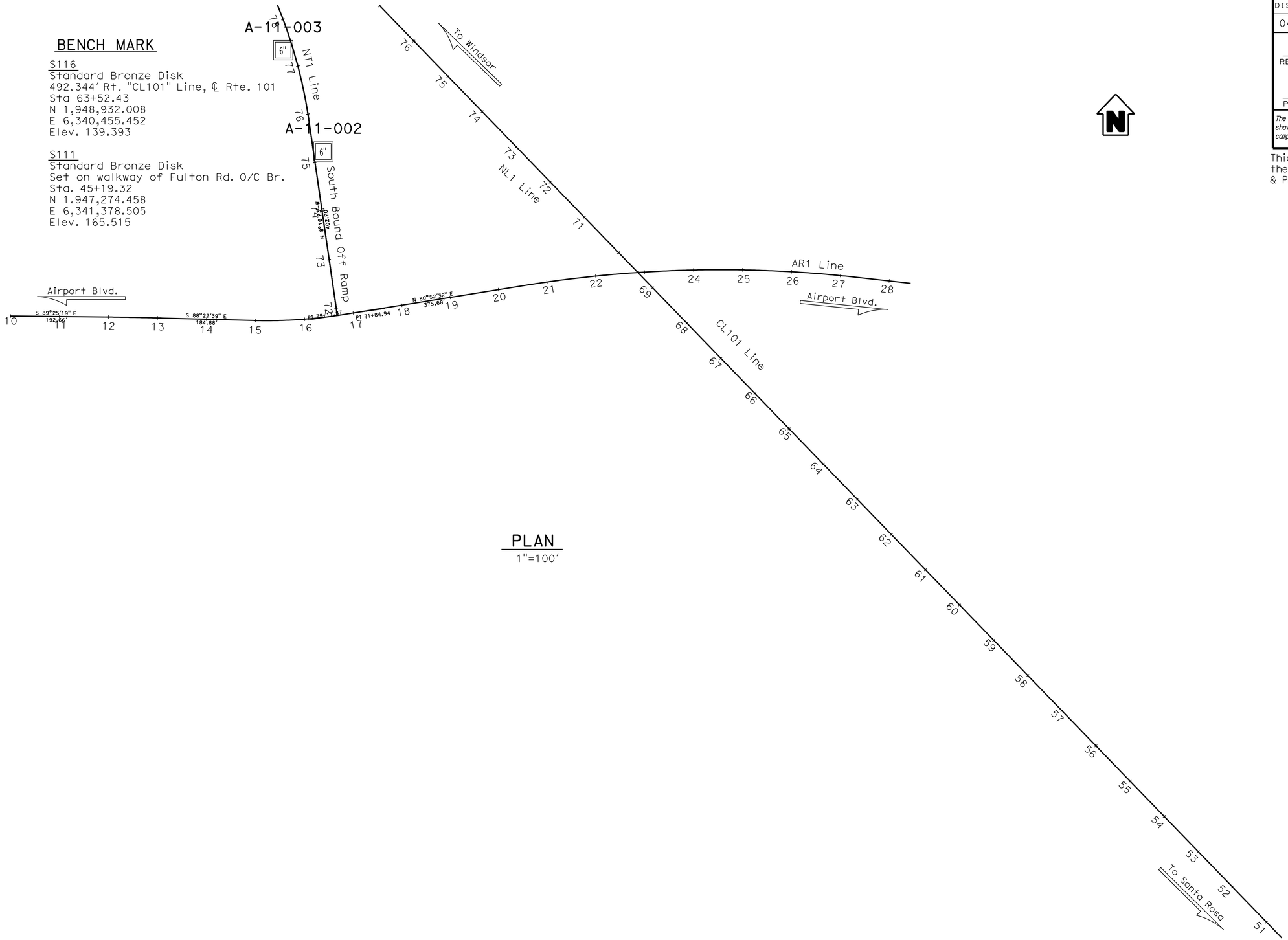


## PLAN
1"=100'

C-15

| ENGINEERING SERVICES | GEOTECHNICAL SERVICES | STATE OF CALIFORNIA DEPARTMENT OF TRANSPORTATION | DIVISION OF ENGINEERING SERVICES OFFICE OF GEOTECHNICAL DESIGN BRANCH | BRIDGE NO. / POST MILES 25.6/26.9 | AIRPORT BOULEVARD SB OFF RAMP LOG OF TEST BORINGS 1 of 4 |
|---|---|---|---|---|---|
| FUNCTIONAL SUPERVISOR NAME: H. Nikoui | DRAWN BY: M. Reynolds 11/10 CHECKED BY: M. Gaffney | FIELD INVESTIGATION BY: M. Hung/ S. Awad | | | |

OGS CIVIL LOG OF TEST BORINGS SHEET

ORIGINAL SCALE IN INCHES FOR REDUCED PLANS 0 1 2 3

CU 04
EA 000209451 (3A23U1)

DISREGARD PRINTS BEARING EARLIER REVISION DATES

REVISION DATES | SHEET | OF

FILE => 0400020945ga015.dgn

USERNAME => s135318 DATE PLOTTED => 13-SEP-2012 TIME PLOTTED => 13:30

| DIST | COUNTY | ROUTE | POST MILES TOTAL PROJECT | SHEET No | TOTAL SHEETS |
|---|---|---|---|---|---|
| 04 | Son | 101 | 25.6/29.2 | 50 | 615 |

REGISTERED CIVIL ENGINEER 12-09-11

9-10-12
PLANS APPROVAL DATE

REGISTERED PROFESSIONAL ENGINEER Samuel Awad No. 64589 Exp. 6-30-13 CIVIL STATE OF CALIFORNIA

*The State of California or its officers or agents shall not be responsible for the accuracy or completeness of electronic copies of this plan sheet.*

This LOTB sheet was prepared in accordance with the Caltrans Soil & Rock Logging, Classification, & Presentation Manual (2010 Edition).

NOTE: pp=unconfined compressive strength (tsf) as measured by pocket penetrometer.

(For Boring Location See Plan, LOTB Sheet 1 of 4)

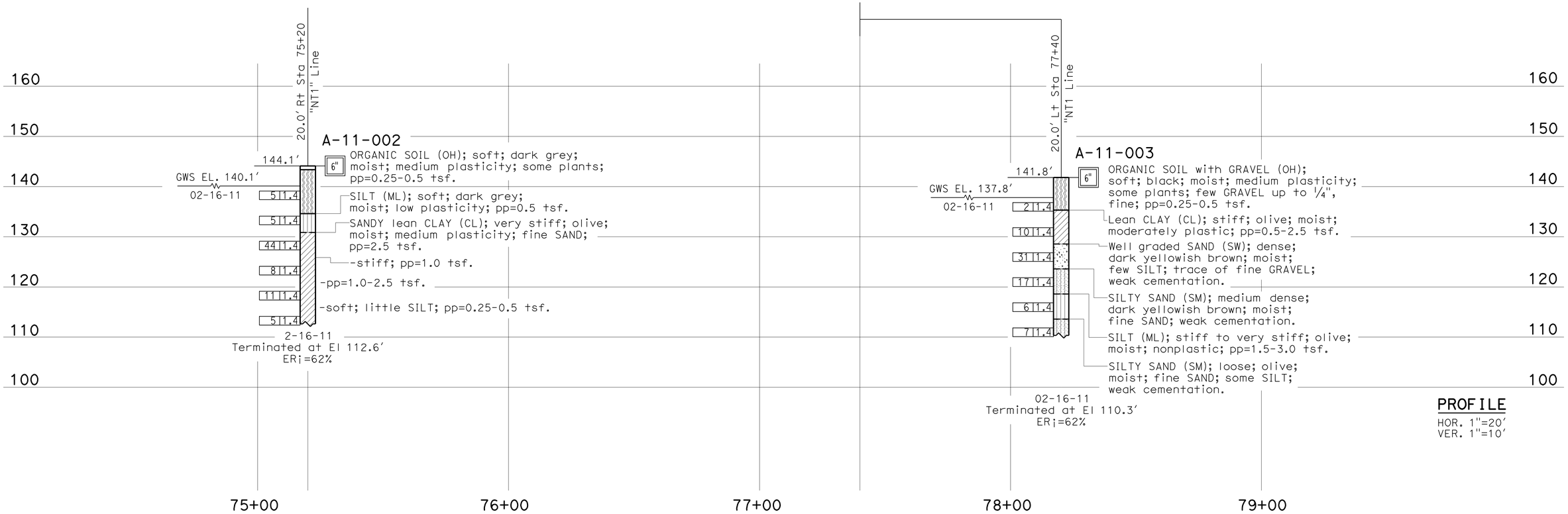


C-16

| ENGINEERING SERVICES | GEOTECHNICAL SERVICES | STATE OF CALIFORNIA DEPARTMENT OF TRANSPORTATION | DIVISION OF ENGINEERING SERVICES OFFICE OF GEOTECHNICAL DESIGN BRANCH | BRIDGE NO. / POST MILES 25.6/26.9 | AIRPORT BOULEVARD SB OFF RAMP LOG OF TEST BORINGS 2 of 4 |
|---|---|---|---|---|---|
| FUNCTIONAL SUPERVISOR NAME: H. Nikoui | DRAWN BY: M. Reynolds 11/10 CHECKED BY: M. Gaffney | FIELD INVESTIGATION BY: S. Awad | | | |

OGS CIVIL LOG OF TEST BORINGS SHEET

ORIGINAL SCALE IN INCHES FOR REDUCED PLANS 0 1 2 3

CU 04
EA 000209451 (3A23U1)

DISREGARD PRINTS BEARING EARLIER REVISION DATES

REVISION DATES SHEET OF

FILE => 0400020945ga016.dgn

USERNAME => s135318 DATE PLOTTED => 13-SEP-2012 TIME PLOTTED => 13:30

REFERENCE: CALTRANS SOIL & ROCK LOGGING, CLASSIFICATION, AND PRESENTATION MANUAL (2010)

| DIST | COUNTY | ROUTE | POST MILES TOTAL PROJECT | SHEET No | TOTAL SHEETS |
|---|---|---|---|---|---|
| 04 | Son | 101 | 25.6/29.2 | 51 | 615 |

REGISTERED CIVIL ENGINEER — DATE 12-09-11

PLANS APPROVAL DATE 9-10-12

REGISTERED PROFESSIONAL ENGINEER Samuel Awad No. 64589 Exp. 6-30-13 CIVIL STATE OF CALIFORNIA

*The State of California or its officers or agents shall not be responsible for the accuracy or completeness of electronic copies of this plan sheet.*

## CEMENTATION

| Description | Criteria |
|---|---|
| Weak | Crumbles or breaks with handling or little finger pressure. |
| Moderate | Crumbles or breaks with considerable finger pressure. |
| Strong | Will not crumble or break with finger pressure. |

## BOREHOLE IDENTIFICATION

| Symbol | Hole Type | Description |
|---|---|---|
| Size | A | Auger Boring (hollow or solid stem bucket) |
| Size | R<br>RW<br>RC<br>P | Rotary drilled boring (conventional)<br>Rotary drilled with self-casing wire-line<br>Rotary core with continuously-sampled, self-casing wire-line<br>Rotary percussion boring (air) |
| Size | R | Rotary drilled diamond core |
| Size | HD<br>HA | Hand driven (1-inch soil tube)<br>Hand Auger |
| ● | D | Dynamic Cone Penetration Boring |
| ▲ | CPT | Cone Penetration Test (ASTM D 5778) |
| ⬚ | O | Other (note on LOTB) |

Note: Size in inches.

## CONSISTENCY OF COHESIVE SOILS

| Description | Shear Strength (tsf) | Pocket Penetrometer Measurement, PP, (tsf) | Torvane Measurement, TV, (tsf) | Vane Shear Measurement, VS, (tsf) |
|---|---|---|---|---|
| Very Soft | Less than 0.12 | Less than 0.25 | Less than 0.12 | Less than 0.12 |
| Soft | 0.12 - 0.25 | 0.25 - 0.5 | 0.12 - 0.25 | 0.12 - 0.25 |
| Medium Stiff | 0.25 - 0.5 | 0.5 - 1 | 0.25 - 0.5 | 0.25 - 0.5 |
| Stiff | 0.5 - 1 | 1 - 2 | 0.5 - 1 | 0.5 - 1 |
| Very Stiff | 1 - 2 | 2 - 4 | 1 - 2 | 1 - 2 |
| Hard | Greater than 2 | Greater than 4 | Greater than 2 | Greater than 2 |

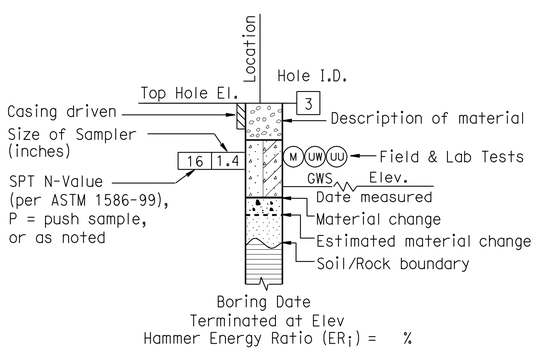


**ROTARY BORING**

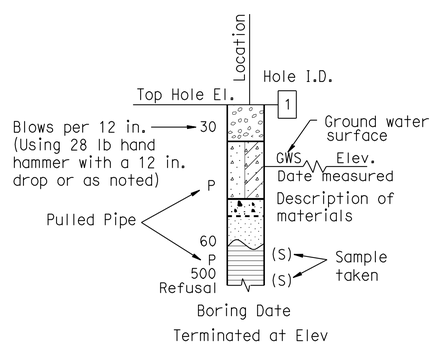


**HAND BORING**

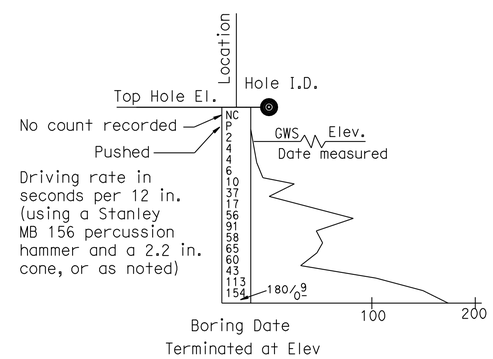


**DYNAMIC CONE PENETRATION BORING**

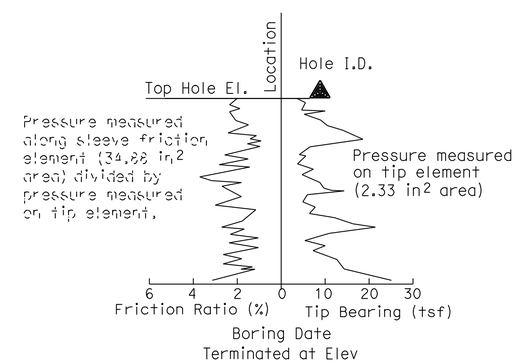


**CONE PENETRATION TEST (CPT) BORING**

C-17

| ENGINEERING SERVICES | GEOTECHNICAL SERVICES | STATE OF CALIFORNIA DEPARTMENT OF TRANSPORTATION | DIVISION OF ENGINEERING SERVICES OFFICE OF GEOTECHNICAL DESIGN BRANCH | BRIDGE NO. / POST MILE 25.6/26.9 | AIRPORT BOULEVARD SB OFF RAMP LOG OF TEST BORINGS 3 of 4 |
|---|---|---|---|---|---|
| | PREPARED BY: M. Reynolds 11/10 | | | | |

GS LOTB SOIL LEGEND

ORIGINAL SCALE IN INCHES FOR REDUCED PLANS 0 1 2 3

CU 04
EA 000209451 (3A23U1)

DISREGARD PRINTS BEARING EARLIER REVISION DATES

REVISION DATES — SHEET — OF

FILE => 0400020945ga017.dgn

USERNAME => s135318 DATE PLOTTED => 13-SEP-2012 TIME PLOTTED => 13:30

REFERENCE: CALTRANS SOIL & ROCK LOGGING, CLASSIFICATION, AND PRESENTATION MANUAL (2010)

| DIST | COUNTY | ROUTE | POST MILES TOTAL PROJECT | SHEET No | TOTAL SHEETS |
|---|---|---|---|---|---|
| 04 | Son | 101 | 25.6/29.2 | 52 | 615 |

REGISTERED CIVIL ENGINEER 12-09-11 DATE

9-10-12
PLANS APPROVAL DATE

REGISTERED PROFESSIONAL ENGINEER Samuel Awad No. 64589 Exp. 6-30-13 CIVIL STATE OF CALIFORNIA

*The State of California or its officers or agents shall not be responsible for the accuracy or completeness of electronic copies of this plan sheet.*

## GROUP SYMBOLS AND NAMES

| Graphic/Symbol | Group Names | Graphic/Symbol | Group Names |
|---|---|---|---|
| GW | Well-graded GRAVEL<br>Well-graded GRAVEL with SAND | CL | Lean CLAY<br>Lean CLAY with SAND<br>Lean CLAY with GRAVEL<br>SANDY lean CLAY<br>SANDY lean CLAY with GRAVEL<br>GRAVELLY lean CLAY<br>GRAVELLY lean CLAY with SAND |
| GP | Poorly-graded GRAVEL<br>Poorly-graded GRAVEL with SAND | | |
| GW-GM | Well-graded GRAVEL with SILT<br>Well-graded GRAVEL with SILT and SAND | CL-ML | SILTY CLAY<br>SILTY CLAY with SAND<br>SILTY CLAY with GRAVEL<br>SANDY SILTY CLAY<br>SANDY SILTY CLAY with GRAVEL<br>GRAVELLY SILTY CLAY<br>GRAVELLY SILTY CLAY with SAND |
| GW-GC | Well-graded GRAVEL with CLAY (or SILTY CLAY)<br>Well-graded GRAVEL with CLAY and SAND (or SILTY CLAY and SAND) | | |
| GP-GM | Poorly-graded GRAVEL with SILT<br>Poorly-graded GRAVEL with SILT and SAND | ML | SILT<br>SILT with SAND<br>SILT with GRAVEL<br>SANDY SILT<br>SANDY SILT with GRAVEL<br>GRAVELLY SILT<br>GRAVELLY SILT with SAND |
| GP-GC | Poorly-graded GRAVEL with CLAY (or SILTY CLAY)<br>Poorly-graded GRAVEL with CLAY and SAND (or SILTY CLAY and SAND) | | |
| GM | SILTY GRAVEL<br>SILTY GRAVEL with SAND | OL | ORGANIC lean CLAY<br>ORGANIC lean CLAY with SAND<br>ORGANIC lean CLAY with GRAVEL<br>SANDY ORGANIC lean CLAY<br>SANDY ORGANIC lean CLAY with GRAVEL<br>GRAVELLY ORGANIC lean CLAY<br>GRAVELLY ORGANIC lean CLAY with SAND |
| GC | CLAYEY GRAVEL<br>CLAYEY GRAVEL with SAND | | |
| GC-GM | SILTY, CLAYEY GRAVEL<br>SILTY, CLAYEY GRAVEL with SAND | OL | ORGANIC SILT<br>ORGANIC SILT with SAND<br>ORGANIC SILT with GRAVEL<br>SANDY ORGANIC SILT<br>SANDY ORGANIC SILT with GRAVEL<br>GRAVELLY ORGANIC SILT<br>GRAVELLY ORGANIC SILT with SAND |
| SW | Well-graded SAND<br>Well-graded SAND with GRAVEL | | |
| SP | Poorly-graded SAND<br>Poorly-graded SAND with GRAVEL | CH | Fat CLAY<br>Fat CLAY with SAND<br>Fat CLAY with GRAVEL<br>SANDY fat CLAY<br>SANDY fat CLAY with GRAVEL<br>GRAVELLY fat CLAY<br>GRAVELLY fat CLAY with SAND |
| SW-SM | Well-graded SAND with SILT<br>Well-graded SAND with SILT and GRAVEL | | |
| SW-SC | Well-graded SAND with CLAY (or SILTY CLAY)<br>Well-graded SAND with CLAY and GRAVEL (or SILTY CLAY and GRAVEL) | MH | Elastic SILT<br>Elastic SILT with SAND<br>Elastic SILT with GRAVEL<br>SANDY elastic SILT<br>SANDY elastic SILT with GRAVEL<br>GRAVELLY elastic SILT<br>GRAVELLY elastic SILT with SAND |
| SP-SM | Poorly-graded SAND with SILT<br>Poorly-graded SAND with SILT and GRAVEL | | |
| SP-SC | Poorly-graded SAND with CLAY (or SILTY CLAY)<br>Poorly-graded SAND with CLAY and GRAVEL (or SILTY CLAY and GRAVEL) | OH | ORGANIC fat CLAY<br>ORGANIC fat CLAY with SAND<br>ORGANIC fat CLAY with GRAVEL<br>SANDY ORGANIC fat CLAY<br>SANDY ORGANIC fat CLAY with GRAVEL<br>GRAVELLY ORGANIC fat CLAY<br>GRAVELLY ORGANIC fat CLAY with SAND |
| SM | SILTY SAND<br>SILTY SAND with GRAVEL | | |
| SC | CLAYEY SAND<br>CLAYEY SAND with GRAVEL | OH | ORGANIC elastic SILT<br>ORGANIC elastic SILT with SAND<br>ORGANIC elastic SILT with GRAVEL<br>SANDY ORGANIC elastic SILT<br>SANDY ORGANIC elastic SILT with GRAVEL<br>GRAVELLY ORGANIC elastic SILT<br>GRAVELLY ORGANIC elastic SILT with SAND |
| SC-SM | SILTY, CLAYEY SAND<br>SILTY, CLAYEY SAND with GRAVEL | | |
| PT | PEAT | OL/OH | ORGANIC SOIL<br>ORGANIC SOIL with SAND<br>ORGANIC SOIL with GRAVEL<br>SANDY ORGANIC SOIL<br>SANDY ORGANIC SOIL with GRAVEL<br>GRAVELLY ORGANIC SOIL<br>GRAVELLY ORGANIC SOIL with SAND |
| | COBBLES<br>COBBLES and BOULDERS<br>BOULDERS | | |

## FIELD AND LABORATORY TESTING

- (C) Consolidation (ASTM D 2435)
- (CL) Collapse Potential (ASTM D 5333)
- (CP) Compaction Curve (CTM 216)
- (CR) Corrosivity Testing (CTM 643, CTM 422, CTM 417)
- (CU) Consolidated Undrained Triaxial (ASTM D 4767)
- (DS) Direct Shear (ASTM D 3080)
- (EI) Expansion Index (ASTM D 4829)
- (M) Moisture Content (ASTM D 2216)
- (OC) Organic Content-% (ASTM D 2974)
- (P) Permeability (CTM 220)
- (PA) Particle Size Analysis (ASTM D 422)
- (PI) Plasticity Index (AASHTO T 90) Liquid Limit (AASHTO T 89)
- (PL) Point Load Index (ASTM D 5731)
- (PM) Pressure Meter
- (R) R-Value (CTM 301)
- (SE) Sand Equivalent (CTM 217)
- (SG) Specific Gravity (AASHTO T 100)
- (SL) Shrinkage Limit (ASTM D 427)
- (SW) Swell Potential (ASTM D 4546)
- (UC) Unconfined Compression-Soil (ASTM D 2166) Unconfined Compression-Rock (ASTM D 2938)
- (UU) Unconsolidated Undrained Triaxial (ASTM D 2850)
- (UW) Unit Weight (ASTM D 4767)

## APPARENT DENSITY OF COHESIONLESS SOILS

| Description | SPT $N_{60}$ (Blows / 12 in.) |
|---|---|
| Very Loose | 0 - 5 |
| Loose | 5 - 10 |
| Medium Dense | 10 - 30 |
| Dense | 30 - 50 |
| Very Dense | Greater than 50 |

## MOISTURE

| Description | Criteria |
|---|---|
| Dry | No discernable moisture |
| Moist | Moisture present, but no free water |
| Wet | Visible free water |

## PERCENT OR PROPORTION OF SOILS

| Description | Criteria |
|---|---|
| Trace | Particles are present but estimated to be less than 5% |
| Few | 5% - 10% |
| Little | 15% - 25% |
| Some | 30% - 45% |
| Mostly | 50% - 100% |

## PARTICLE SIZE

| Description | | Size (in.) |
|---|---|---|
| Boulder | | Greater than 12 |
| Cobble | | 3 - 12 |
| Gravel | Coarse | 3/4 - 3 |
| | Fine | 1/5 - 3/4 |
| Sand | Coarse | 1/16 - 1/5 |
| | Medium | 1/64 - 1/16 |
| | Fine | 1/300 - 1/64 |
| Silt and Clay | | Less than 1/300 |

C-18

| ENGINEERING SERVICES | GEOTECHNICAL SERVICES | STATE OF CALIFORNIA DEPARTMENT OF TRANSPORTATION | DIVISION OF ENGINEERING SERVICES OFFICE OF GEOTECHNICAL DESIGN BRANCH | BRIDGE NO. / POST MILE 25.6/26.9 | AIRPORT BOULEVARD SB OFF RAMP LOG OF TEST BORINGS 4 of 4 |
|---|---|---|---|---|---|
| | PREPARED BY: M. Reynolds 11/10 | | | | |

GS LOTB SOIL LEGEND

ORIGINAL SCALE IN INCHES FOR REDUCED PLANS 0 1 2 3

CU 04
EA 000209451 (3A23U1)

DISREGARD PRINTS BEARING EARLIER REVISION DATES

REVISION DATES | SHEET | OF

FILE => 0400020945ga018.dgn

USERNAME => s135318 DATE PLOTTED => 13-SEP-2012 TIME PLOTTED => 13:30

| DIST | COUNTY | ROUTE | POST MILES TOTAL PROJECT | SHEET No | TOTAL SHEETS |
|---|---|---|---|---|---|
| 04 | Son | 101 | 25.6/29.2 | 53 | 615 |

REGISTERED CIVIL ENGINEER 05-23-11

9-10-12
PLANS APPROVAL DATE

REGISTERED PROFESSIONAL ENGINEER Meng-Hsi Hung No. 69739 Exp. 6-30-12 CIVIL STATE OF CALIFORNIA

*The State of California or its officers or agents shall not be responsible for the accuracy or completeness of electronic copies of this plan sheet.*

This LOTB sheet was prepared in accordance with the Caltrans Soil & Rock Logging, Classification, & Presentation Manual (2010 Edition).

## BENCH MARK

S116
Standard Bronze Disk
492.344′ Rt. "CL101" Line, ℄ Rte. 101
Sta 63+52.43
N 1,948,932.008
E 6,340,455.452
Elev. 139.393

S111
Standard Bronze Disk
Set on walkway of Fulton Rd. O/C Br.
Sta. 45+19.32
N 1.947,274.458
E 6,341,378.505
Elev. 165.515

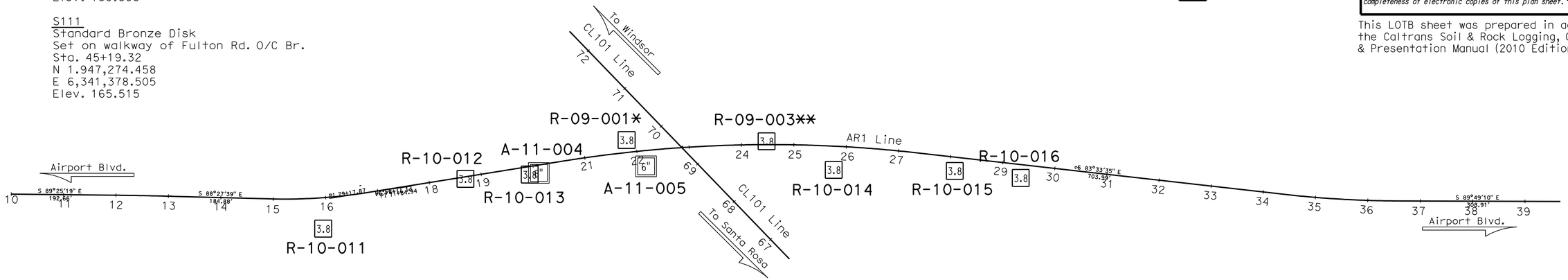


NOTE: * R-09-001: See structure plans, "LOG OF TEST BORINGS/ AIRPORT BOULEVARD OC (REPLACE)", Sheet 2 of 6, for details.

** R-09-003: See structure plans, "LOG OF TEST BORINGS/ AIRPORT BOULEVARD OC (REPLACE)", Sheet 4 of 6, for details.

PLAN
1"=100′

C-19

| ENGINEERING SERVICES | GEOTECHNICAL SERVICES | STATE OF CALIFORNIA DEPARTMENT OF TRANSPORTATION | DIVISION OF ENGINEERING SERVICES OFFICE OF GEOTECHNICAL DESIGN BRANCH | BRIDGE NO. / POST MILES 25.6/26.9 | AIRPORT BOULEVARD LOG OF TEST BORINGS 1 of 6 |
|---|---|---|---|---|---|
| FUNCTIONAL SUPERVISOR NAME: H. Nikoui | DRAWN BY: M. Reynolds 11/10 CHECKED BY: M. Gaffney | FIELD INVESTIGATION BY: M. Hung | | | |

OGS CIVIL LOG OF TEST BORINGS SHEET

ORIGINAL SCALE IN INCHES FOR REDUCED PLANS 0 1 2 3

CU 04
EA 000209451 (3A23U1)

DISREGARD PRINTS BEARING EARLIER REVISION DATES

REVISION DATES: 06-13-11 06-22-11 11-29-11 12-08-11

SHEET OF

FILE => 0400020945ga019.dgn

USERNAME => s135318 DATE PLOTTED => 13-SEP-2012 TIME PLOTTED => 13:31

| DIST | COUNTY | ROUTE | POST MILES TOTAL PROJECT | SHEET No | TOTAL SHEETS |
|---|---|---|---|---|---|
| 04 | Son | 101 | 25.6/29.2 | 54 | 615 |

NOTE: pp=unconfined compressive strength (tsf) as measured by pocket penetrometer.

REGISTERED CIVIL ENGINEER 05-23-11

9-10-12
PLANS APPROVAL DATE

REGISTERED PROFESSIONAL ENGINEER Meng-Hsi Hung No. 69739 Exp. 6-30-12 CIVIL STATE OF CALIFORNIA

*The State of California or its officers or agents shall not be responsible for the accuracy or completeness of electronic copies of this plan sheet.*

This LOTB sheet was prepared in accordance with the Caltrans Soil & Rock Logging, Classification, & Presentation Manual (2010 Edition).

(For Boring Location See Plan, LOTB Sheet 1 of 6)

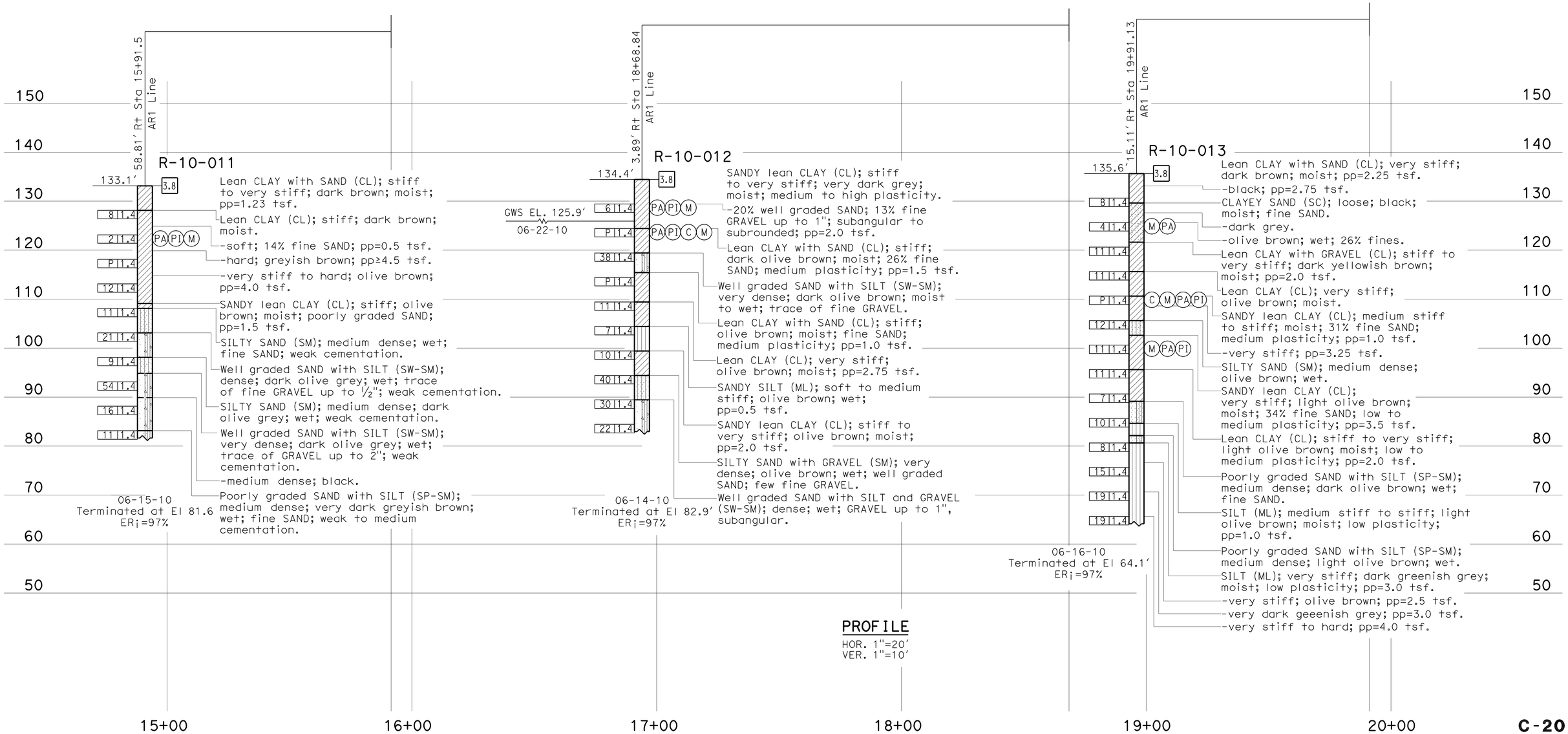


C-20

| ENGINEERING SERVICES | GEOTECHNICAL SERVICES | STATE OF CALIFORNIA DEPARTMENT OF TRANSPORTATION | DIVISION OF ENGINEERING SERVICES OFFICE OF GEOTECHNICAL DESIGN BRANCH | BRIDGE NO. / POST MILES 25.6/26.9 | AIRPORT BOULEVARD LOG OF TEST BORINGS 2 of 6 |
|---|---|---|---|---|---|
| FUNCTIONAL SUPERVISOR NAME: H. Nikoui | DRAWN BY: M. Reynolds 11/10 CHECKED BY: M. Gaffney | FIELD INVESTIGATION BY: M. Hung | CU 04 EA 000209451 (3A23U1) | | |

OGS CIVIL LOG OF TEST BORINGS SHEET

ORIGINAL SCALE IN INCHES FOR REDUCED PLANS 0 1 2 3

DISREGARD PRINTS BEARING EARLIER REVISION DATES 06-13-11 06-22-11

REVISION DATES | SHEET | OF

FILE => 0400020945ga020.dgn

USERNAME => s135318 DATE PLOTTED => 13-SEP-2012 TIME PLOTTED => 13:31

| DIST | COUNTY | ROUTE | POST MILES TOTAL PROJECT | SHEET No | TOTAL SHEETS |
|---|---|---|---|---|---|
| 04 | Son | 101 | 25.6/29.2 | 55 | 615 |

REGISTERED CIVIL ENGINEER 04-18-11

9-10-12
PLANS APPROVAL DATE

REGISTERED PROFESSIONAL ENGINEER Samuel Awad No. 64589 Exp. 6-30-11 CIVIL STATE OF CALIFORNIA

*The State of California or its officers or agents shall not be responsible for the accuracy or completeness of electronic copies of this plan sheet.*

This LOTB sheet was prepared in accordance with the Caltrans Soil & Rock Logging, Classification, & Presentation Manual (2010 Edition).

(For Boring Location See Plan, LOTB Sheet 1 of 6)

NOTE: pp=unconfined compressive strength (tsf) as measured by pocket penetrometer.

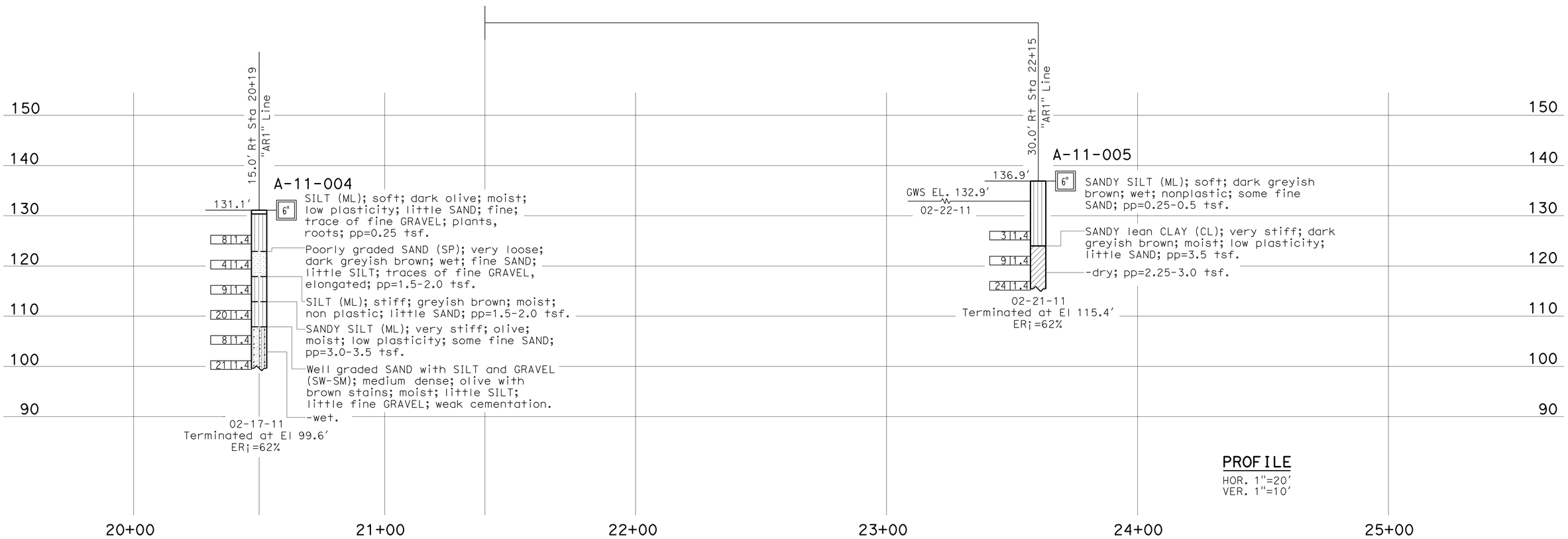


C-21

| ENGINEERING SERVICES | GEOTECHNICAL SERVICES | STATE OF CALIFORNIA DEPARTMENT OF TRANSPORTATION | DIVISION OF ENGINEERING SERVICES OFFICE OF GEOTECHNICAL DESIGN BRANCH | BRIDGE NO. / POST MILES 25.6/26.9 | AIRPORT BOULEVARD LOG OF TEST BORINGS 3 of 6 |
|---|---|---|---|---|---|
| FUNCTIONAL SUPERVISOR NAME: H. Nikoui | DRAWN BY: M. Reynolds 11/10 CHECKED BY: M Gaffney | FIELD INVESTIGATION BY: S. Awad | CU 04 EA 000209451 (3A23U1) | | |

OGS CIVIL LOG OF TEST BORINGS SHEET

ORIGINAL SCALE IN INCHES FOR REDUCED PLANS 0 1 2 3

DISREGARD PRINTS BEARING EARLIER REVISION DATES → 04-14-11 06-22-11 12-08-11

REVISION DATES | SHEET | OF

FILE => 0400020945ga021.dgn

USERNAME => s135318 DATE PLOTTED => 13-SEP-2012 TIME PLOTTED => 13:31

NOTE: pp=unconfined compressive strength (tsf) as measured by pocket penetrometer.

| DIST | COUNTY | ROUTE | POST MILES TOTAL PROJECT | SHEET No | TOTAL SHEETS |
|---|---|---|---|---|---|
| 04 | Son | 101 | 25.6/29.2 | 56 | 615 |

REGISTERED CIVIL ENGINEER 05-23-11

9-10-12
PLANS APPROVAL DATE

REGISTERED PROFESSIONAL ENGINEER Meng-Hsi Hung No. 69739 Exp. 6-30-12 CIVIL STATE OF CALIFORNIA

*The State of California or its officers or agents shall not be responsible for the accuracy or completeness of electronic copies of this plan sheet.*

This LOTB sheet was prepared in accordance with the Caltrans Soil & Rock Logging, Classification, & Presentation Manual (2010 Edition).

(For Boring Location See Plan, LOTB Sheet 1 of 6)

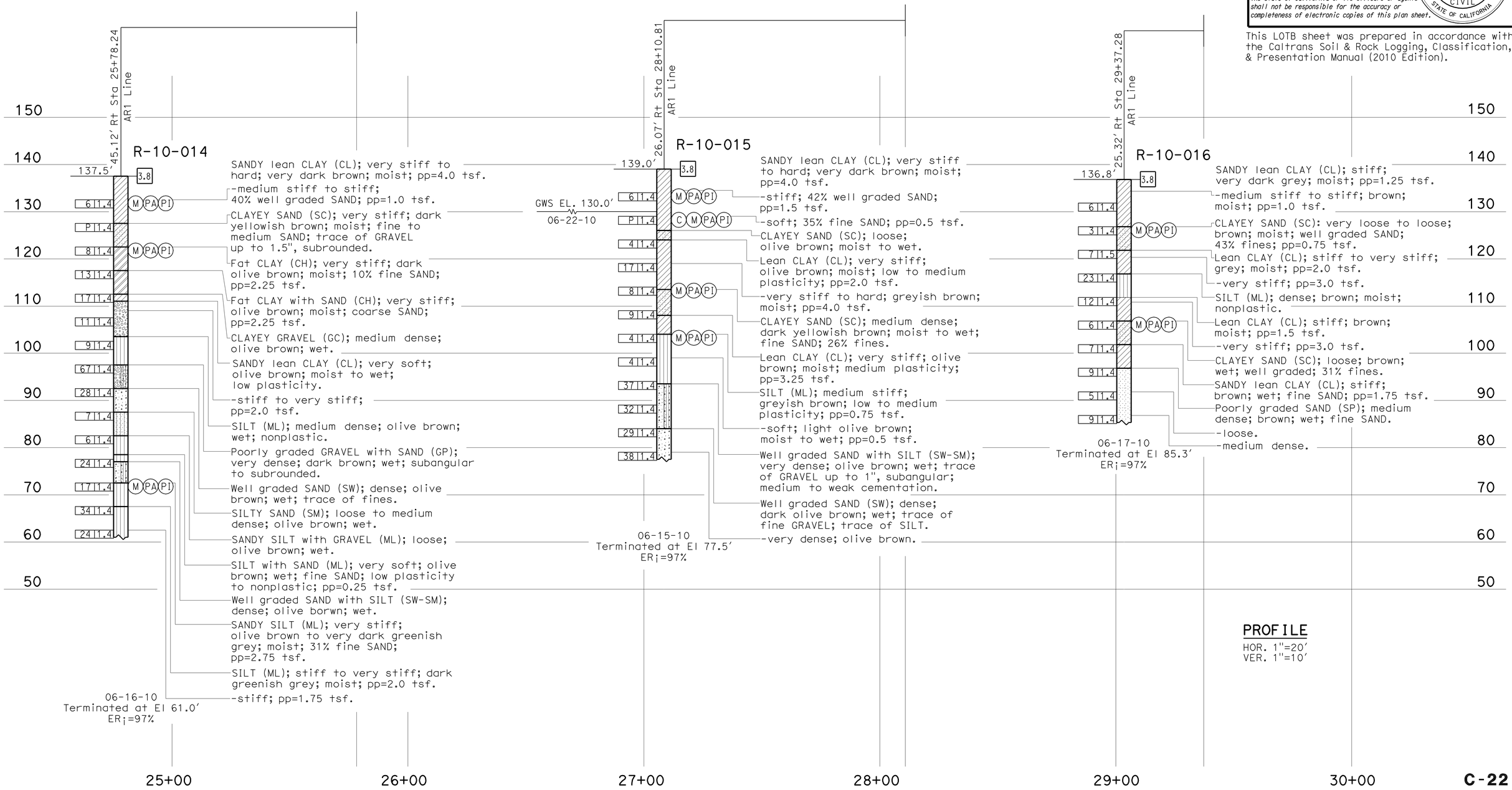


C-22

| ENGINEERING SERVICES | GEOTECHNICAL SERVICES | STATE OF CALIFORNIA DEPARTMENT OF TRANSPORTATION | DIVISION OF ENGINEERING SERVICES OFFICE OF GEOTECHNICAL DESIGN BRANCH | BRIDGE NO. / POST MILES 25.6/26.9 | AIRPORT BOULEVARD LOG OF TEST BORINGS 4 of 6 |
|---|---|---|---|---|---|
| FUNCTIONAL SUPERVISOR NAME: H. Nikoui | DRAWN BY: M. Reynolds 11/10 CHECKED BY: M. Gaffney | FIELD INVESTIGATION BY: M. Hung | CU 04 EA 000209451 (3A23U1) | DISREGARD PRINTS BEARING EARLIER REVISION DATES | REVISION DATES 06-13-11 06-22-11 SHEET OF |

OGS CIVIL LOG OF TEST BORINGS SHEET

ORIGINAL SCALE IN INCHES FOR REDUCED PLANS 0 1 2 3

FILE => 0400020945ga022.dgn

USERNAME => s135318 DATE PLOTTED => 13-SEP-2012 TIME PLOTTED => 13:31

REFERENCE: CALTRANS SOIL & ROCK LOGGING, CLASSIFICATION, AND PRESENTATION MANUAL (2010)

| DIST | COUNTY | ROUTE | POST MILES TOTAL PROJECT | SHEET No | TOTAL SHEETS |
|---|---|---|---|---|---|
| 04 | Son | 101 | 25.6/29.2 | 57 | 615 |

REGISTERED CIVIL ENGINEER 05-23-11 DATE

9-10-12
PLANS APPROVAL DATE

REGISTERED PROFESSIONAL ENGINEER Meng-Hsi Hung No. 69739 Exp. 6-30-12 CIVIL STATE OF CALIFORNIA

*The State of California or its officers or agents shall not be responsible for the accuracy or completeness of electronic copies of this plan sheet.*

## CEMENTATION

| Description | Criteria |
|---|---|
| Weak | Crumbles or breaks with handling or little finger pressure. |
| Moderate | Crumbles or breaks with considerable finger pressure. |
| Strong | Will not crumble or break with finger pressure. |

## BOREHOLE IDENTIFICATION

| Symbol | Hole Type | Description |
|---|---|---|
| Size | A | Auger Boring (hollow or solid stem bucket) |
| Size | R<br>RW<br>RC<br>P | Rotary drilled boring (conventional)<br>Rotary drilled with self-casing wire-line<br>Rotary core with continuously-sampled, self-casing wire-line<br>Rotary percussion boring (air) |
| Size | R | Rotary drilled diamond core |
| Size | HD<br>HA | Hand driven (1-inch soil tube)<br>Hand Auger |
| ● | D | Dynamic Cone Penetration Boring |
| ▲ | CPT | Cone Penetration Test (ASTM D 5778) |
| ⬚ | O | Other (note on LOTB) |

Note: Size in inches.

## CONSISTENCY OF COHESIVE SOILS

| Description | Shear Strength (tsf) | Pocket Penetrometer Measurement, PP, (tsf) | Torvane Measurement, TV, (tsf) | Vane Shear Measurement, VS, (tsf) |
|---|---|---|---|---|
| Very Soft | Less than 0.12 | Less than 0.25 | Less than 0.12 | Less than 0.12 |
| Soft | 0.12 - 0.25 | 0.25 - 0.5 | 0.12 - 0.25 | 0.12 - 0.25 |
| Medium Stiff | 0.25 - 0.5 | 0.5 - 1 | 0.25 - 0.5 | 0.25 - 0.5 |
| Stiff | 0.5 - 1 | 1 - 2 | 0.5 - 1 | 0.5 - 1 |
| Very Stiff | 1 - 2 | 2 - 4 | 1 - 2 | 1 - 2 |
| Hard | Greater than 2 | Greater than 4 | Greater than 2 | Greater than 2 |

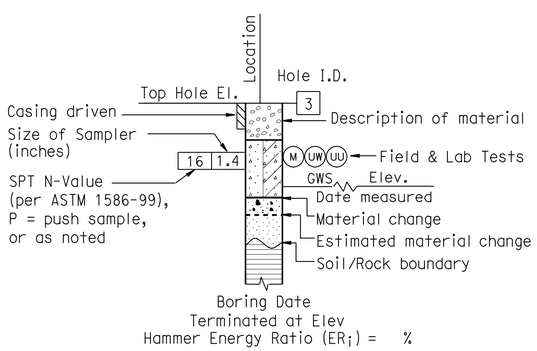


**ROTARY BORING**

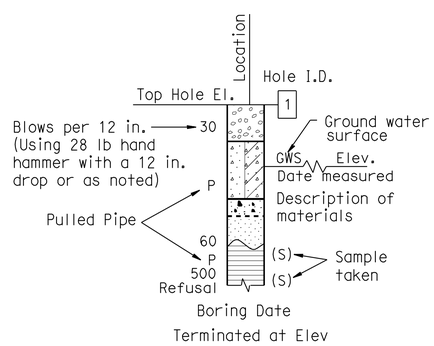


**HAND BORING**

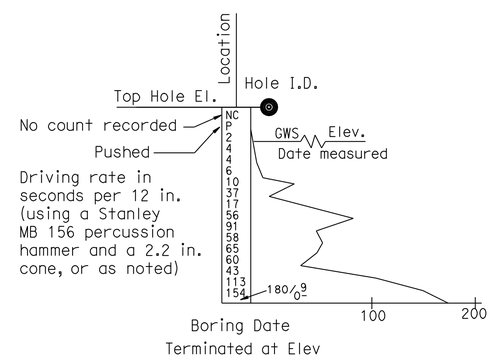


**DYNAMIC CONE PENETRATION BORING**

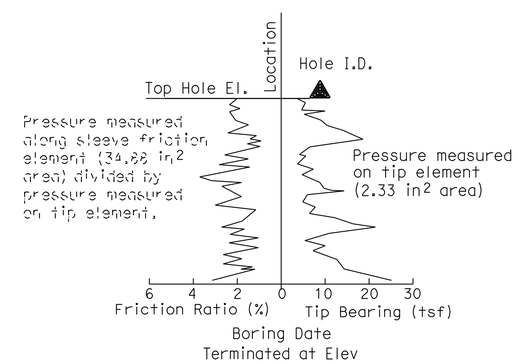


**CONE PENETRATION TEST (CPT) BORING**

C-23

| ENGINEERING SERVICES | GEOTECHNICAL SERVICES | STATE OF CALIFORNIA DEPARTMENT OF TRANSPORTATION | DIVISION OF ENGINEERING SERVICES OFFICE OF GEOTECHNICAL DESIGN BRANCH | BRIDGE NO. / POST MILE 25.6/26.9 | AIRPORT BOULEVARD LOG OF TEST BORINGS 5 of 6 |
|---|---|---|---|---|---|
| | PREPARED BY: M. Reynolds 11/10 | | | | |

GS LOTB SOIL LEGEND

ORIGINAL SCALE IN INCHES FOR REDUCED PLANS 0 1 2 3

CU 04
EA 000209451 (3A23U1)

DISREGARD PRINTS BEARING EARLIER REVISION DATES → 06-13-11 06-22-11

REVISION DATES | SHEET | OF

FILE => 0400020945ga023.dgn

USERNAME => s135318 DATE PLOTTED => 13-SEP-2012 TIME PLOTTED => 13:31

REFERENCE: CALTRANS SOIL & ROCK LOGGING, CLASSIFICATION, AND PRESENTATION MANUAL (2010)

| DIST | COUNTY | ROUTE | POST MILES TOTAL PROJECT | SHEET No | TOTAL SHEETS |
|---|---|---|---|---|---|
| 04 | Son | 101 | 25.6/29.2 | 58 | 615 |

05-23-11
REGISTERED CIVIL ENGINEER DATE

9-10-12
PLANS APPROVAL DATE

REGISTERED PROFESSIONAL ENGINEER Meng-Hsi Hung No. 69739 Exp. 6-30-12 CIVIL STATE OF CALIFORNIA

*The State of California or its officers or agents shall not be responsible for the accuracy or completeness of electronic copies of this plan sheet.*

## GROUP SYMBOLS AND NAMES

| Graphic/Symbol | Group Names | Graphic/Symbol | Group Names |
|---|---|---|---|
| GW | Well-graded GRAVEL<br>Well-graded GRAVEL with SAND | CL | Lean CLAY<br>Lean CLAY with SAND<br>Lean CLAY with GRAVEL<br>SANDY lean CLAY<br>SANDY lean CLAY with GRAVEL<br>GRAVELLY lean CLAY<br>GRAVELLY lean CLAY with SAND |
| GP | Poorly-graded GRAVEL<br>Poorly-graded GRAVEL with SAND | | |
| GW-GM | Well-graded GRAVEL with SILT<br>Well-graded GRAVEL with SILT and SAND | CL-ML | SILTY CLAY<br>SILTY CLAY with SAND<br>SILTY CLAY with GRAVEL<br>SANDY SILTY CLAY<br>SANDY SILTY CLAY with GRAVEL<br>GRAVELLY SILTY CLAY<br>GRAVELLY SILTY CLAY with SAND |
| GW-GC | Well-graded GRAVEL with CLAY (or SILTY CLAY)<br>Well-graded GRAVEL with CLAY and SAND (or SILTY CLAY and SAND) | | |
| GP-GM | Poorly-graded GRAVEL with SILT<br>Poorly-graded GRAVEL with SILT and SAND | ML | SILT<br>SILT with SAND<br>SILT with GRAVEL<br>SANDY SILT<br>SANDY SILT with GRAVEL<br>GRAVELLY SILT<br>GRAVELLY SILT with SAND |
| GP-GC | Poorly-graded GRAVEL with CLAY (or SILTY CLAY)<br>Poorly-graded GRAVEL with CLAY and SAND (or SILTY CLAY and SAND) | | |
| GM | SILTY GRAVEL<br>SILTY GRAVEL with SAND | OL | ORGANIC lean CLAY<br>ORGANIC lean CLAY with SAND<br>ORGANIC lean CLAY with GRAVEL<br>SANDY ORGANIC lean CLAY<br>SANDY ORGANIC lean CLAY with GRAVEL<br>GRAVELLY ORGANIC lean CLAY<br>GRAVELLY ORGANIC lean CLAY with SAND |
| GC | CLAYEY GRAVEL<br>CLAYEY GRAVEL with SAND | | |
| GC-GM | SILTY, CLAYEY GRAVEL<br>SILTY, CLAYEY GRAVEL with SAND | OL | ORGANIC SILT<br>ORGANIC SILT with SAND<br>ORGANIC SILT with GRAVEL<br>SANDY ORGANIC SILT<br>SANDY ORGANIC SILT with GRAVEL<br>GRAVELLY ORGANIC SILT<br>GRAVELLY ORGANIC SILT with SAND |
| SW | Well-graded SAND<br>Well-graded SAND with GRAVEL | | |
| SP | Poorly-graded SAND<br>Poorly-graded SAND with GRAVEL | CH | Fat CLAY<br>Fat CLAY with SAND<br>Fat CLAY with GRAVEL<br>SANDY fat CLAY<br>SANDY fat CLAY with GRAVEL<br>GRAVELLY fat CLAY<br>GRAVELLY fat CLAY with SAND |
| SW-SM | Well-graded SAND with SILT<br>Well-graded SAND with SILT and GRAVEL | | |
| SW-SC | Well-graded SAND with CLAY (or SILTY CLAY)<br>Well-graded SAND with CLAY and GRAVEL (or SILTY CLAY and GRAVEL) | MH | Elastic SILT<br>Elastic SILT with SAND<br>Elastic SILT with GRAVEL<br>SANDY elastic SILT<br>SANDY elastic SILT with GRAVEL<br>GRAVELLY elastic SILT<br>GRAVELLY elastic SILT with SAND |
| SP-SM | Poorly-graded SAND with SILT<br>Poorly-graded SAND with SILT and GRAVEL | | |
| SP-SC | Poorly-graded SAND with CLAY (or SILTY CLAY)<br>Poorly-graded SAND with CLAY and GRAVEL (or SILTY CLAY and GRAVEL) | OH | ORGANIC fat CLAY<br>ORGANIC fat CLAY with SAND<br>ORGANIC fat CLAY with GRAVEL<br>SANDY ORGANIC fat CLAY<br>SANDY ORGANIC fat CLAY with GRAVEL<br>GRAVELLY ORGANIC fat CLAY<br>GRAVELLY ORGANIC fat CLAY with SAND |
| SM | SILTY SAND<br>SILTY SAND with GRAVEL | | |
| SC | CLAYEY SAND<br>CLAYEY SAND with GRAVEL | OH | ORGANIC elastic SILT<br>ORGANIC elastic SILT with SAND<br>ORGANIC elastic SILT with GRAVEL<br>SANDY ORGANIC elastic SILT<br>SANDY ORGANIC elastic SILT with GRAVEL<br>GRAVELLY ORGANIC elastic SILT<br>GRAVELLY ORGANIC elastic SILT with SAND |
| SC-SM | SILTY, CLAYEY SAND<br>SILTY, CLAYEY SAND with GRAVEL | | |
| PT | PEAT | OL/OH | ORGANIC SOIL<br>ORGANIC SOIL with SAND<br>ORGANIC SOIL with GRAVEL<br>SANDY ORGANIC SOIL<br>SANDY ORGANIC SOIL with GRAVEL<br>GRAVELLY ORGANIC SOIL<br>GRAVELLY ORGANIC SOIL with SAND |
| | COBBLES<br>COBBLES and BOULDERS<br>BOULDERS | | |

## FIELD AND LABORATORY TESTING

- (C) Consolidation (ASTM D 2435)
- (CL) Collapse Potential (ASTM D 5333)
- (CP) Compaction Curve (CTM 216)
- (CR) Corrosivity Testing (CTM 643, CTM 422, CTM 417)
- (CU) Consolidated Undrained Triaxial (ASTM D 4767)
- (DS) Direct Shear (ASTM D 3080)
- (EI) Expansion Index (ASTM D 4829)
- (M) Moisture Content (ASTM D 2216)
- (OC) Organic Content-% (ASTM D 2974)
- (P) Permeability (CTM 220)
- (PA) Particle Size Analysis (ASTM D 422)
- (PI) Plasticity Index (AASHTO T 90) Liquid Limit (AASHTO T 89)
- (PL) Point Load Index (ASTM D 5731)
- (PM) Pressure Meter
- (R) R-Value (CTM 301)
- (SE) Sand Equivalent (CTM 217)
- (SG) Specific Gravity (AASHTO T 100)
- (SL) Shrinkage Limit (ASTM D 427)
- (SW) Swell Potential (ASTM D 4546)
- (UC) Unconfined Compression-Soil (ASTM D 2166) Unconfined Compression-Rock (ASTM D 2938)
- (UU) Unconsolidated Undrained Triaxial (ASTM D 2850)
- (UW) Unit Weight (ASTM D 4767)

## APPARENT DENSITY OF COHESIONLESS SOILS

| Description | SPT $N_{60}$ (Blows / 12 in.) |
|---|---|
| Very Loose | 0 - 5 |
| Loose | 5 - 10 |
| Medium Dense | 10 - 30 |
| Dense | 30 - 50 |
| Very Dense | Greater than 50 |

## MOISTURE

| Description | Criteria |
|---|---|
| Dry | No discernable moisture |
| Moist | Moisture present, but no free water |
| Wet | Visible free water |

## PERCENT OR PROPORTION OF SOILS

| Description | Criteria |
|---|---|
| Trace | Particles are present but estimated to be less than 5% |
| Few | 5% - 10% |
| Little | 15% - 25% |
| Some | 30% - 45% |
| Mostly | 50% - 100% |

## PARTICLE SIZE

| Description | | Size (in.) |
|---|---|---|
| Boulder | | Greater than 12 |
| Cobble | | 3 - 12 |
| Gravel | Coarse | 3/4 - 3 |
| | Fine | 1/5 - 3/4 |
| Sand | Coarse | 1/16 - 1/5 |
| | Medium | 1/64 - 1/16 |
| | Fine | 1/300 - 1/64 |
| Silt and Clay | | Less than 1/300 |

C-24

| ENGINEERING SERVICES | GEOTECHNICAL SERVICES | STATE OF CALIFORNIA DEPARTMENT OF TRANSPORTATION | DIVISION OF ENGINEERING SERVICES OFFICE OF GEOTECHNICAL DESIGN BRANCH | BRIDGE NO. / POST MILE 25.6/26.9 | AIRPORT BOULEVARD LOG OF TEST BORINGS 6 of 6 |
|---|---|---|---|---|---|
| | PREPARED BY: M. Reynolds 11/10 | | | | |

GS LOTB SOIL LEGEND

ORIGINAL SCALE IN INCHES FOR REDUCED PLANS 0 1 2 3

CU 04
EA 000209451 (3A23U1)

DISREGARD PRINTS BEARING EARLIER REVISION DATES 06-13-11 06-22-11

REVISION DATES | SHEET | OF

FILE => 0400020945ga024.dgn

USERNAME => s135318 DATE PLOTTED => 13-SEP-2012 TIME PLOTTED => 13:31

| DIST | COUNTY | ROUTE | POST MILES TOTAL PROJECT | SHEET No | TOTAL SHEETS |
|---|---|---|---|---|---|
| 04 | Son | 101 | 25.6/29.2 | 59 | 615 |

REGISTERED CIVIL ENGINEER 05-23-11

9-10-12
PLANS APPROVAL DATE

REGISTERED PROFESSIONAL ENGINEER Meng-Hsi Hung No. 69739 Exp. 6-30-12 CIVIL STATE OF CALIFORNIA

*The State of California or its officers or agents shall not be responsible for the accuracy or completeness of electronic copies of this plan sheet.*

This LOTB sheet was prepared in accordance with the Caltrans Soil & Rock Logging, Classification, & Presentation Manual (2010 Edition).

## BENCH MARK

S116
Standard Bronze Disk
492.344' Rt. "CL101" Line, ℄ Rte. 101
Sta 63+52.43
N 1,948,932.008
E 6,340,455.452
Elev. 139.393

S111
Standard Bronze Disk
Set on walkway of Fulton Rd. O/C Br.
Sta. 45+19.32
N 1.947,274.458
E 6,341,378.505
Elev. 165.515

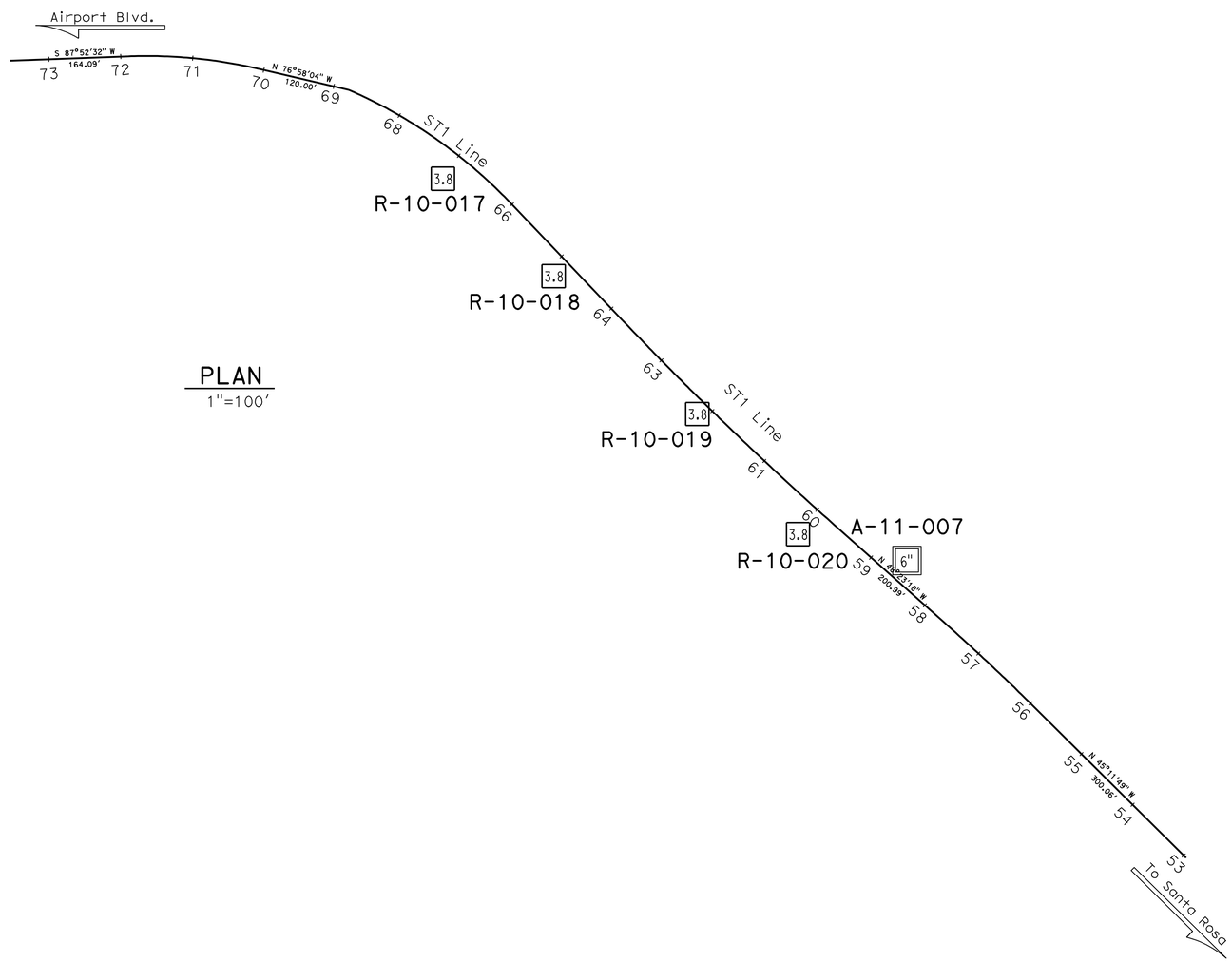


PLAN
1"=100'

N

C-25

| ENGINEERING SERVICES | GEOTECHNICAL SERVICES | STATE OF CALIFORNIA DEPARTMENT OF TRANSPORTATION | DIVISION OF ENGINEERING SERVICES OFFICE OF GEOTECHNICAL DESIGN BRANCH | BRIDGE NO. / POST MILES 25.6/26.9 | AIRPORT BOULEVARD SB ON-RAMP LOG OF TEST BORINGS 1 of 6 |
|---|---|---|---|---|---|
| FUNCTIONAL SUPERVISOR NAME: H. Nikoui | DRAWN BY: M. Reynolds 11/10 CHECKED BY: M. Gaffney | FIELD INVESTIGATION BY: M. Hung | | | |

OGS CIVIL LOG OF TEST BORINGS SHEET

ORIGINAL SCALE IN INCHES FOR REDUCED PLANS 0 1 2 3

CU 04
EA 000209451 (3A23U1)

DISREGARD PRINTS BEARING EARLIER REVISION DATES → 06-13-11 12-08-11

REVISION DATES | SHEET | OF

FILE => 0400020945ga025.dgn

USERNAME => s135318 DATE PLOTTED => 13-SEP-2012 TIME PLOTTED => 13:31

| DIST | COUNTY | ROUTE | POST MILES TOTAL PROJECT | SHEET No | TOTAL SHEETS |
|---|---|---|---|---|---|
| 04 | Son | 101 | 25.6/29.2 | 60 | 615 |

REGISTERED CIVIL ENGINEER 04-18-11

9-10-12
PLANS APPROVAL DATE

REGISTERED PROFESSIONAL ENGINEER Samuel Awad No. 64589 Exp. 6-30-11 CIVIL STATE OF CALIFORNIA

*The State of California or its officers or agents shall not be responsible for the accuracy or completeness of electronic copies of this plan sheet.*

This LOTB sheet was prepared in accordance with the Caltrans Soil & Rock Logging, Classification, & Presentation Manual (2010 Edition).

NOTE: pp=unconfined compressive strength (tsf) as measured by pocket penetrometer.

(For Boring Location See Plan, LOTB Sheet 1 of 6)

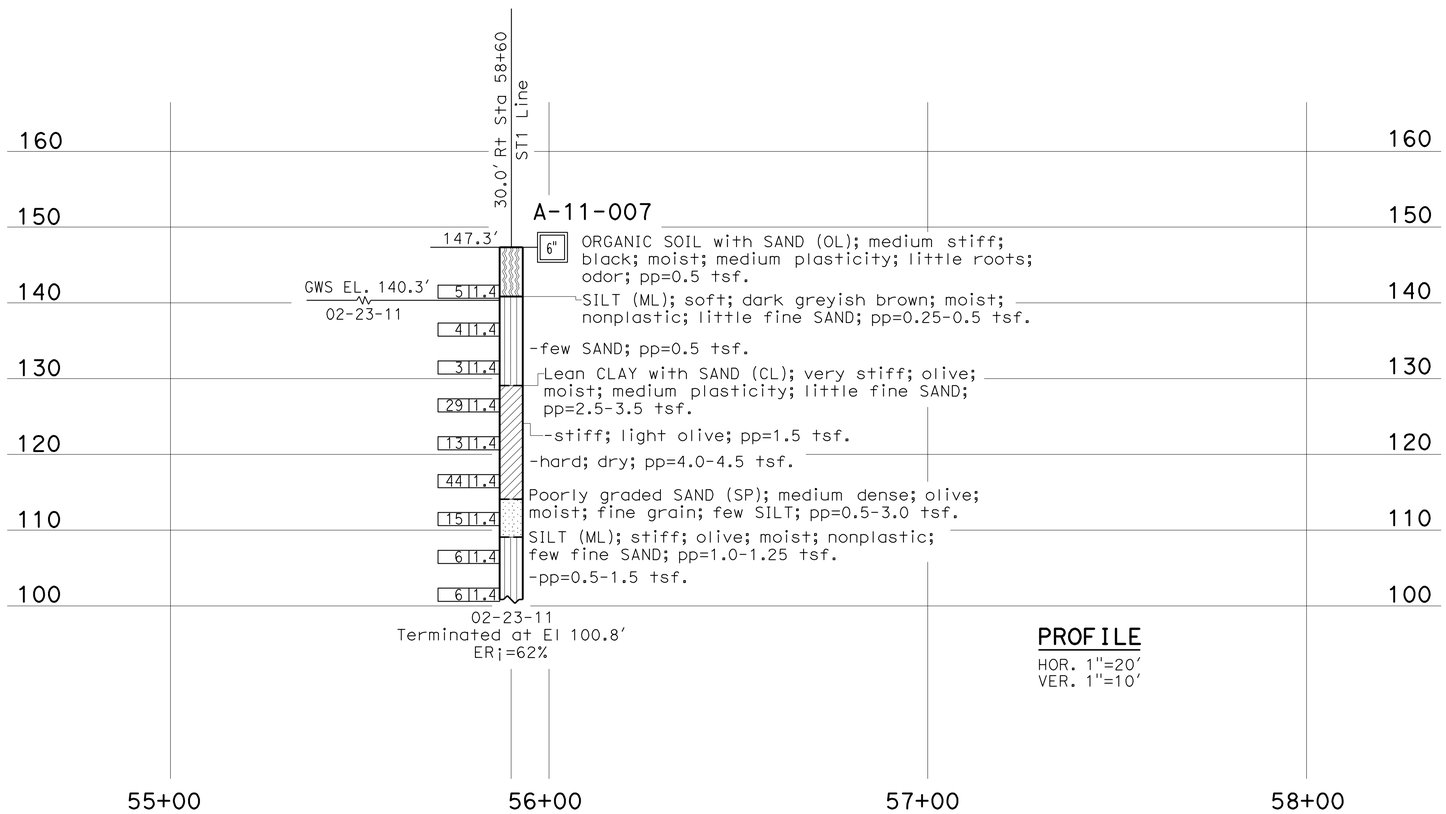


PROFILE
HOR. 1"=20'
VER. 1"=10'

C-26

| ENGINEERING SERVICES | GEOTECHNICAL SERVICES | STATE OF CALIFORNIA DEPARTMENT OF TRANSPORTATION | DIVISION OF ENGINEERING SERVICES OFFICE OF GEOTECHNICAL DESIGN BRANCH | BRIDGE NO. / POST MILES 25.9/27.0 | AIRPORT BOULEVARD SB ON-RAMP LOG OF TEST BORINGS 2 of 6 |
|---|---|---|---|---|---|
| FUNCTIONAL SUPERVISOR NAME: H. Nikoui | DRAWN BY: M. Reynolds 11/10 CHECKED BY: M. Gaffney | FIELD INVESTIGATION BY: S. Awad | | | |

OGS CIVIL LOG OF TEST BORINGS SHEET

ORIGINAL SCALE IN INCHES FOR REDUCED PLANS 0 1 2 3

CU 04
EA 000209451 (3A23U1)

DISREGARD PRINTS BEARING EARLIER REVISION DATES → 04-14-11 03-20-2013 12-08-11

REVISION DATES | SHEET | OF

FILE => 0400020945ga026.dgn

USERNAME => s135318 DATE PLOTTED => 13-SEP-2012 TIME PLOTTED => 13:31

| DIST | COUNTY | ROUTE | POST MILES TOTAL PROJECT | SHEET No | TOTAL SHEETS |
|---|---|---|---|---|---|
| 04 | Son | 101 | 25.6/29.2 | 61 | 615 |

REGISTERED CIVIL ENGINEER 05-23-11

9-10-12
PLANS APPROVAL DATE

REGISTERED PROFESSIONAL ENGINEER Meng-Hsi Hung No. 69739 Exp. 6-30-12 CIVIL STATE OF CALIFORNIA

*The State of California or its officers or agents shall not be responsible for the accuracy or completeness of electronic copies of this plan sheet.*

This LOTB sheet was prepared in accordance with the Caltrans Soil & Rock Logging, Classification, & Presentation Manual (2010 Edition).

(For Boring Location See Plan, LOTB Sheet 1 of 6)

NOTE: pp=unconfined compressive strength (tsf) as measured by pocket penetrometer.

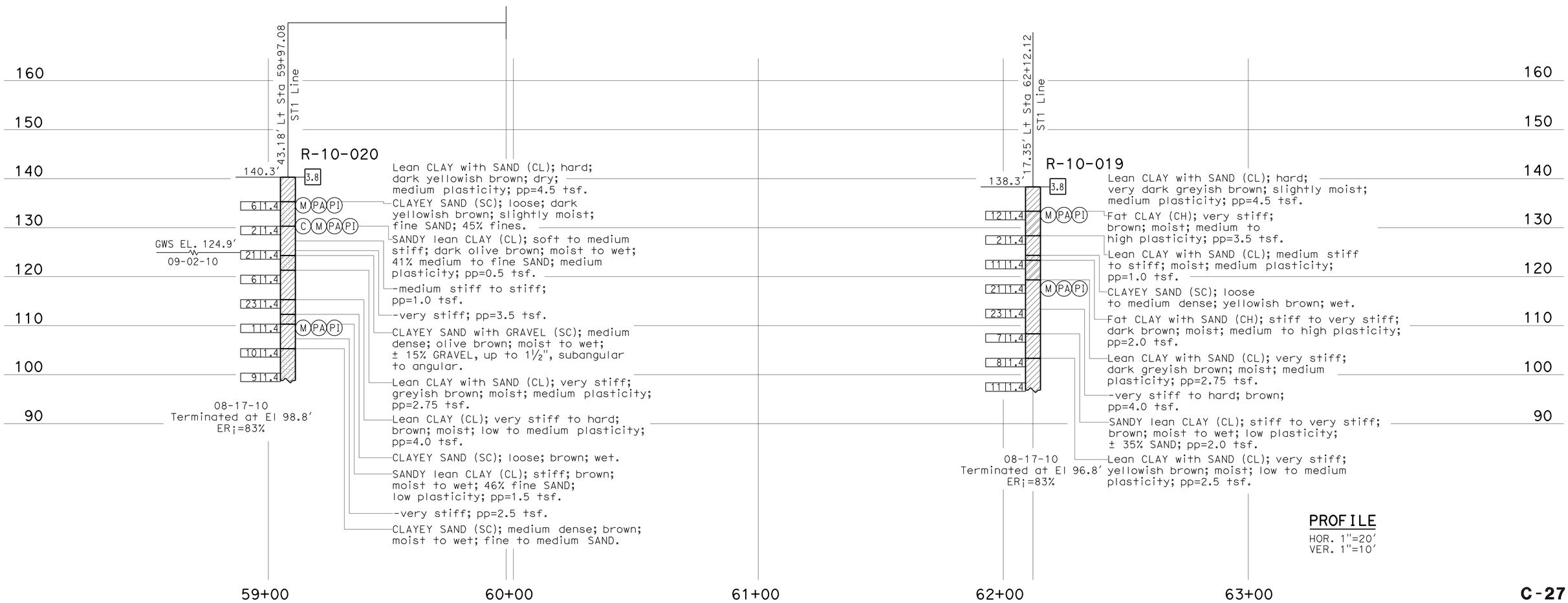


C-27

| ENGINEERING SERVICES | GEOTECHNICAL SERVICES | STATE OF CALIFORNIA DEPARTMENT OF TRANSPORTATION | DIVISION OF ENGINEERING SERVICES OFFICE OF GEOTECHNICAL DESIGN BRANCH | BRIDGE NO. / POST MILES 25.6/26.9 | AIRPORT BOULEVARD SB ON-RAMP LOG OF TEST BORINGS 3 of 6 |
|---|---|---|---|---|---|
| FUNCTIONAL SUPERVISOR NAME: H. Nikoui | DRAWN BY: M. Reynolds 11/10 CHECKED BY: M. Gaffney | FIELD INVESTIGATION BY: M. Hung | | | |

OGS CIVIL LOG OF TEST BORINGS SHEET

ORIGINAL SCALE IN INCHES FOR REDUCED PLANS 0 1 2 3

CU 04
EA 000209451 (3A23U1)

DISREGARD PRINTS BEARING EARLIER REVISION DATES → 06-13-11

REVISION DATES | SHEET | OF

FILE => 0400020945ga027.dgn

USERNAME => s135318 DATE PLOTTED => 13-SEP-2012 TIME PLOTTED => 13:31

| DIST | COUNTY | ROUTE | POST MILES TOTAL PROJECT | SHEET No | TOTAL SHEETS |
|---|---|---|---|---|---|
| 04 | Son | 101 | 25.6/29.2 | 62 | 615 |

REGISTERED CIVIL ENGINEER 05-23-11

9-10-12
PLANS APPROVAL DATE

REGISTERED PROFESSIONAL ENGINEER Meng-Hsi Hung No. 69739 Exp. 6-30-12 CIVIL STATE OF CALIFORNIA

*The State of California or its officers or agents shall not be responsible for the accuracy or completeness of electronic copies of this plan sheet.*

This LOTB sheet was prepared in accordance with the Caltrans Soil & Rock Logging, Classification, & Presentation Manual (2010 Edition).

(For Boring Location See Plan, LOTB Sheet 1 of 6)

NOTE: pp=unconfined compressive strength (tsf) as measured by pocket penetrometer.

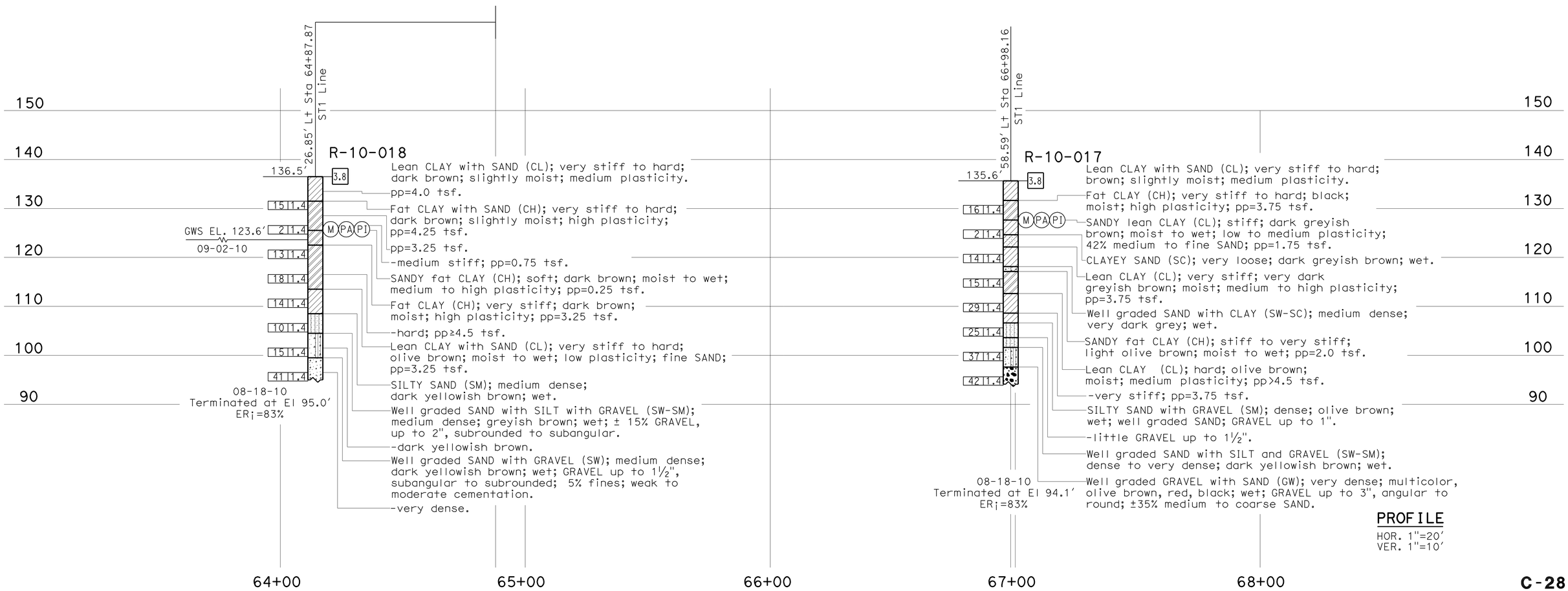


C-28

| ENGINEERING SERVICES | | GEOTECHNICAL SERVICES | STATE OF CALIFORNIA DEPARTMENT OF TRANSPORTATION | DIVISION OF ENGINEERING SERVICES OFFICE OF GEOTECHNICAL DESIGN BRANCH | BRIDGE NO. / POST MILES 25.6/26.9 | AIRPORT BOULEVARD SB ON-RAMP LOG OF TEST BORINGS 4 of 6 |
|---|---|---|---|---|---|---|
| FUNCTIONAL SUPERVISOR NAME: H. Nikoui | DRAWN BY: M. Reynolds 11/10 CHECKED BY: M. Gaffney | FIELD INVESTIGATION BY: M. Hung | | | | |

OGS CIVIL LOG OF TEST BORINGS SHEET

ORIGINAL SCALE IN INCHES FOR REDUCED PLANS 0 1 2 3

CU 04 EA 000209451 (3A23U1)

DISREGARD PRINTS BEARING EARLIER REVISION DATES → 06-13-11

REVISION DATES | SHEET | OF

FILE => 0400020945ga028.dgn

USERNAME => s135518 DATE PLOTTED => 13-SEP-2012 TIME PLOTTED => 13:32

REFERENCE: CALTRANS SOIL & ROCK LOGGING, CLASSIFICATION, AND PRESENTATION MANUAL (2010)

| DIST | COUNTY | ROUTE | POST MILES TOTAL PROJECT | SHEET No | TOTAL SHEETS |
|---|---|---|---|---|---|
| 04 | Son | 101 | 25.6/29.2 | 63 | 615 |

REGISTERED CIVIL ENGINEER 05-23-11 DATE

9-10-12
PLANS APPROVAL DATE

REGISTERED PROFESSIONAL ENGINEER Meng-Hsi Hung No. 69739 Exp. 6-30-12 CIVIL STATE OF CALIFORNIA

*The State of California or its officers or agents shall not be responsible for the accuracy or completeness of electronic copies of this plan sheet.*

## CEMENTATION

| Description | Criteria |
|---|---|
| Weak | Crumbles or breaks with handling or little finger pressure. |
| Moderate | Crumbles or breaks with considerable finger pressure. |
| Strong | Will not crumble or break with finger pressure. |

## BOREHOLE IDENTIFICATION

| Symbol | Hole Type | Description |
|---|---|---|
| Size | A | Auger Boring (hollow or solid stem bucket) |
| Size | R<br>RW<br>RC<br>P | Rotary drilled boring (conventional)<br>Rotary drilled with self-casing wire-line<br>Rotary core with continuously-sampled, self-casing wire-line<br>Rotary percussion boring (air) |
| Size | R | Rotary drilled diamond core |
| Size | HD<br>HA | Hand driven (1-inch soil tube)<br>Hand Auger |
| ● | D | Dynamic Cone Penetration Boring |
| ▲ | CPT | Cone Penetration Test (ASTM D 5778) |
| ⬚ | O | Other (note on LOTB) |

Note: Size in inches.

## CONSISTENCY OF COHESIVE SOILS

| Description | Shear Strength (tsf) | Pocket Penetrometer Measurement, PP, (tsf) | Torvane Measurement, TV, (tsf) | Vane Shear Measurement, VS, (tsf) |
|---|---|---|---|---|
| Very Soft | Less than 0.12 | Less than 0.25 | Less than 0.12 | Less than 0.12 |
| Soft | 0.12 - 0.25 | 0.25 - 0.5 | 0.12 - 0.25 | 0.12 - 0.25 |
| Medium Stiff | 0.25 - 0.5 | 0.5 - 1 | 0.25 - 0.5 | 0.25 - 0.5 |
| Stiff | 0.5 - 1 | 1 - 2 | 0.5 - 1 | 0.5 - 1 |
| Very Stiff | 1 - 2 | 2 - 4 | 1 - 2 | 1 - 2 |
| Hard | Greater than 2 | Greater than 4 | Greater than 2 | Greater than 2 |

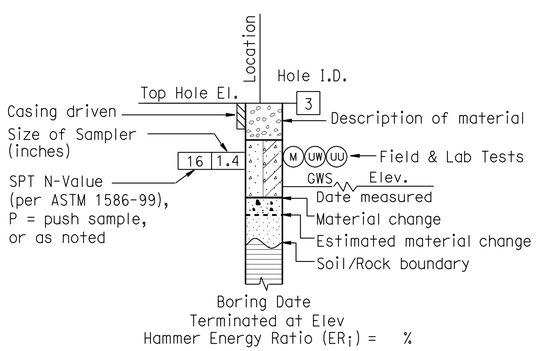


**ROTARY BORING**

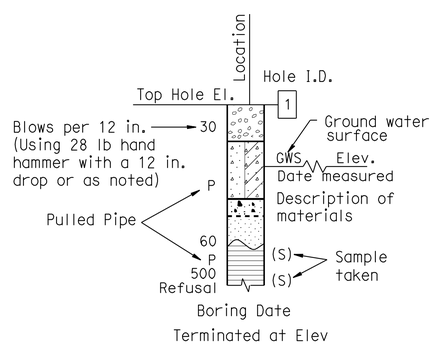


**HAND BORING**

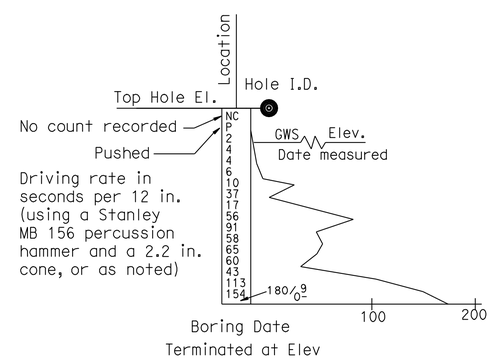


**DYNAMIC CONE PENETRATION BORING**

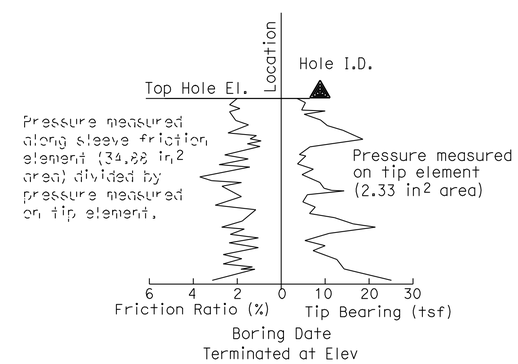


**CONE PENETRATION TEST (CPT) BORING**

C-29

| ENGINEERING SERVICES | GEOTECHNICAL SERVICES | STATE OF CALIFORNIA DEPARTMENT OF TRANSPORTATION | DIVISION OF ENGINEERING SERVICES OFFICE OF GEOTECHNICAL DESIGN BRANCH | BRIDGE NO. / POST MILE 25.6/26.9 | AIRPORT BOULEVARD SB ON-RAMP LOG OF TEST BORINGS 5 of 6 |
|---|---|---|---|---|---|
| | PREPARED BY: M. Reynolds 11/10 | | | | |

GS LOTB SOIL LEGEND

ORIGINAL SCALE IN INCHES FOR REDUCED PLANS 0 1 2 3

CU 04
EA 000209451 (3A23U1)

DISREGARD PRINTS BEARING EARLIER REVISION DATES → 06-13-11

REVISION DATES | SHEET | OF

FILE => 0400020945ga029.dgn

USERNAME => s135318 DATE PLOTTED => 13-SEP-2012 TIME PLOTTED => 13:32

REFERENCE: CALTRANS SOIL & ROCK LOGGING, CLASSIFICATION, AND PRESENTATION MANUAL (2010)

| DIST | COUNTY | ROUTE | POST MILES TOTAL PROJECT | SHEET No | TOTAL SHEETS |
|---|---|---|---|---|---|
| 04 | Son | 101 | 25.6/29.2 | 64 | 615 |

05-23-11
REGISTERED CIVIL ENGINEER DATE

9-10-12
PLANS APPROVAL DATE

REGISTERED PROFESSIONAL ENGINEER Meng-Hsi Hung No. 69739 Exp. 6-30-12 CIVIL STATE OF CALIFORNIA

*The State of California or its officers or agents shall not be responsible for the accuracy or completeness of electronic copies of this plan sheet.*

## GROUP SYMBOLS AND NAMES

| Graphic/Symbol | Group Names | Graphic/Symbol | Group Names |
|---|---|---|---|
| GW | Well-graded GRAVEL<br>Well-graded GRAVEL with SAND | CL | Lean CLAY<br>Lean CLAY with SAND<br>Lean CLAY with GRAVEL<br>SANDY lean CLAY<br>SANDY lean CLAY with GRAVEL<br>GRAVELLY lean CLAY<br>GRAVELLY lean CLAY with SAND |
| GP | Poorly-graded GRAVEL<br>Poorly-graded GRAVEL with SAND | | |
| GW-GM | Well-graded GRAVEL with SILT<br>Well-graded GRAVEL with SILT and SAND | CL-ML | SILTY CLAY<br>SILTY CLAY with SAND<br>SILTY CLAY with GRAVEL<br>SANDY SILTY CLAY<br>SANDY SILTY CLAY with GRAVEL<br>GRAVELLY SILTY CLAY<br>GRAVELLY SILTY CLAY with SAND |
| GW-GC | Well-graded GRAVEL with CLAY (or SILTY CLAY)<br>Well-graded GRAVEL with CLAY and SAND (or SILTY CLAY and SAND) | | |
| GP-GM | Poorly-graded GRAVEL with SILT<br>Poorly-graded GRAVEL with SILT and SAND | ML | SILT<br>SILT with SAND<br>SILT with GRAVEL<br>SANDY SILT<br>SANDY SILT with GRAVEL<br>GRAVELLY SILT<br>GRAVELLY SILT with SAND |
| GP-GC | Poorly-graded GRAVEL with CLAY (or SILTY CLAY)<br>Poorly-graded GRAVEL with CLAY and SAND (or SILTY CLAY and SAND) | | |
| GM | SILTY GRAVEL<br>SILTY GRAVEL with SAND | OL | ORGANIC lean CLAY<br>ORGANIC lean CLAY with SAND<br>ORGANIC lean CLAY with GRAVEL<br>SANDY ORGANIC lean CLAY<br>SANDY ORGANIC lean CLAY with GRAVEL<br>GRAVELLY ORGANIC lean CLAY<br>GRAVELLY ORGANIC lean CLAY with SAND |
| GC | CLAYEY GRAVEL<br>CLAYEY GRAVEL with SAND | | |
| GC-GM | SILTY, CLAYEY GRAVEL<br>SILTY, CLAYEY GRAVEL with SAND | OL | ORGANIC SILT<br>ORGANIC SILT with SAND<br>ORGANIC SILT with GRAVEL<br>SANDY ORGANIC SILT<br>SANDY ORGANIC SILT with GRAVEL<br>GRAVELLY ORGANIC SILT<br>GRAVELLY ORGANIC SILT with SAND |
| SW | Well-graded SAND<br>Well-graded SAND with GRAVEL | | |
| SP | Poorly-graded SAND<br>Poorly-graded SAND with GRAVEL | CH | Fat CLAY<br>Fat CLAY with SAND<br>Fat CLAY with GRAVEL<br>SANDY fat CLAY<br>SANDY fat CLAY with GRAVEL<br>GRAVELLY fat CLAY<br>GRAVELLY fat CLAY with SAND |
| SW-SM | Well-graded SAND with SILT<br>Well-graded SAND with SILT and GRAVEL | | |
| SW-SC | Well-graded SAND with CLAY (or SILTY CLAY)<br>Well-graded SAND with CLAY and GRAVEL (or SILTY CLAY and GRAVEL) | MH | Elastic SILT<br>Elastic SILT with SAND<br>Elastic SILT with GRAVEL<br>SANDY elastic SILT<br>SANDY elastic SILT with GRAVEL<br>GRAVELLY elastic SILT<br>GRAVELLY elastic SILT with SAND |
| SP-SM | Poorly-graded SAND with SILT<br>Poorly-graded SAND with SILT and GRAVEL | | |
| SP-SC | Poorly-graded SAND with CLAY (or SILTY CLAY)<br>Poorly-graded SAND with CLAY and GRAVEL (or SILTY CLAY and GRAVEL) | OH | ORGANIC fat CLAY<br>ORGANIC fat CLAY with SAND<br>ORGANIC fat CLAY with GRAVEL<br>SANDY ORGANIC fat CLAY<br>SANDY ORGANIC fat CLAY with GRAVEL<br>GRAVELLY ORGANIC fat CLAY<br>GRAVELLY ORGANIC fat CLAY with SAND |
| SM | SILTY SAND<br>SILTY SAND with GRAVEL | | |
| SC | CLAYEY SAND<br>CLAYEY SAND with GRAVEL | OH | ORGANIC elastic SILT<br>ORGANIC elastic SILT with SAND<br>ORGANIC elastic SILT with GRAVEL<br>SANDY ORGANIC elastic SILT<br>SANDY ORGANIC elastic SILT with GRAVEL<br>GRAVELLY ORGANIC elastic SILT<br>GRAVELLY ORGANIC elastic SILT with SAND |
| SC-SM | SILTY, CLAYEY SAND<br>SILTY, CLAYEY SAND with GRAVEL | | |
| PT | PEAT | OL/OH | ORGANIC SOIL<br>ORGANIC SOIL with SAND<br>ORGANIC SOIL with GRAVEL<br>SANDY ORGANIC SOIL<br>SANDY ORGANIC SOIL with GRAVEL<br>GRAVELLY ORGANIC SOIL<br>GRAVELLY ORGANIC SOIL with SAND |
| | COBBLES<br>COBBLES and BOULDERS<br>BOULDERS | | |

## FIELD AND LABORATORY TESTING

- (C) Consolidation (ASTM D 2435)
- (CL) Collapse Potential (ASTM D 5333)
- (CP) Compaction Curve (CTM 216)
- (CR) Corrosivity Testing (CTM 643, CTM 422, CTM 417)
- (CU) Consolidated Undrained Triaxial (ASTM D 4767)
- (DS) Direct Shear (ASTM D 3080)
- (EI) Expansion Index (ASTM D 4829)
- (M) Moisture Content (ASTM D 2216)
- (OC) Organic Content-% (ASTM D 2974)
- (P) Permeability (CTM 220)
- (PA) Particle Size Analysis (ASTM D 422)
- (PI) Plasticity Index (AASHTO T 90) Liquid Limit (AASHTO T 89)
- (PL) Point Load Index (ASTM D 5731)
- (PM) Pressure Meter
- (R) R-Value (CTM 301)
- (SE) Sand Equivalent (CTM 217)
- (SG) Specific Gravity (AASHTO T 100)
- (SL) Shrinkage Limit (ASTM D 427)
- (SW) Swell Potential (ASTM D 4546)
- (UC) Unconfined Compression-Soil (ASTM D 2166) Unconfined Compression-Rock (ASTM D 2938)
- (UU) Unconsolidated Undrained Triaxial (ASTM D 2850)
- (UW) Unit Weight (ASTM D 4767)

## APPARENT DENSITY OF COHESIONLESS SOILS

| Description | SPT $N_{60}$ (Blows / 12 in.) |
|---|---|
| Very Loose | 0 - 5 |
| Loose | 5 - 10 |
| Medium Dense | 10 - 30 |
| Dense | 30 - 50 |
| Very Dense | Greater than 50 |

## MOISTURE

| Description | Criteria |
|---|---|
| Dry | No discernable moisture |
| Moist | Moisture present, but no free water |
| Wet | Visible free water |

## PERCENT OR PROPORTION OF SOILS

| Description | Criteria |
|---|---|
| Trace | Particles are present but estimated to be less than 5% |
| Few | 5% - 10% |
| Little | 15% - 25% |
| Some | 30% - 45% |
| Mostly | 50% - 100% |

## PARTICLE SIZE

| Description | | Size (in.) |
|---|---|---|
| Boulder | | Greater than 12 |
| Cobble | | 3 - 12 |
| Gravel | Coarse | 3/4 - 3 |
| | Fine | 1/5 - 3/4 |
| Sand | Coarse | 1/16 - 1/5 |
| | Medium | 1/64 - 1/16 |
| | Fine | 1/300 - 1/64 |
| Silt and Clay | | Less than 1/300 |

C-30

| ENGINEERING SERVICES | GEOTECHNICAL SERVICES | STATE OF CALIFORNIA DEPARTMENT OF TRANSPORTATION | DIVISION OF ENGINEERING SERVICES OFFICE OF GEOTECHNICAL DESIGN BRANCH | BRIDGE NO. / POST MILE 25.6/26.9 | AIRPORT BOULEVARD SB ON-RAMP LOG OF TEST BORINGS 6 of 6 |
|---|---|---|---|---|---|
| | PREPARED BY: M. Reynolds 11/10 | | | | |

GS LOTB SOIL LEGEND

ORIGINAL SCALE IN INCHES FOR REDUCED PLANS 0 1 2 3

CU 04
EA 000209451 (3A23U1)

DISREGARD PRINTS BEARING EARLIER REVISION DATES 06-13-11

REVISION DATES | SHEET | OF

FILE => 0400020945ga030.dgn

USERNAME => s135318 DATE PLOTTED => 13-SEP-2012 TIME PLOTTED => 13:32

| DIST | COUNTY | ROUTE | POST MILES TOTAL PROJECT | SHEET No | TOTAL SHEETS |
|---|---|---|---|---|---|
| 04 | Son | 101 | 25.6/29.2 | 65 | 615 |

REGISTERED CIVIL ENGINEER 05-23-11

9-10-12
PLANS APPROVAL DATE

REGISTERED PROFESSIONAL ENGINEER Meng-Hsi Hung No. 69739 Exp. 6-30-12 CIVIL STATE OF CALIFORNIA

*The State of California or its officers or agents shall not be responsible for the accuracy or completeness of electronic copies of this plan sheet.*

This LOTB sheet was prepared in accordance with the Caltrans Soil & Rock Logging, Classification, & Presentation Manual (2010 Edition).

## BENCH MARK

S116
Standard Bronze Disk
492.344' Rt. "CL101" Line, ℄ Rte. 101
Sta 63+52.43
N 1,948,932.008
E 6,340,455.452
Elev. 139.393

S111
Standard Bronze Disk
Set on walkway of Fulton Rd. O/C Br.
Sta. 45+19.32
N 1.947,274.458
E 6,341,378.505
Elev. 165.515

## PLAN
1"=100'

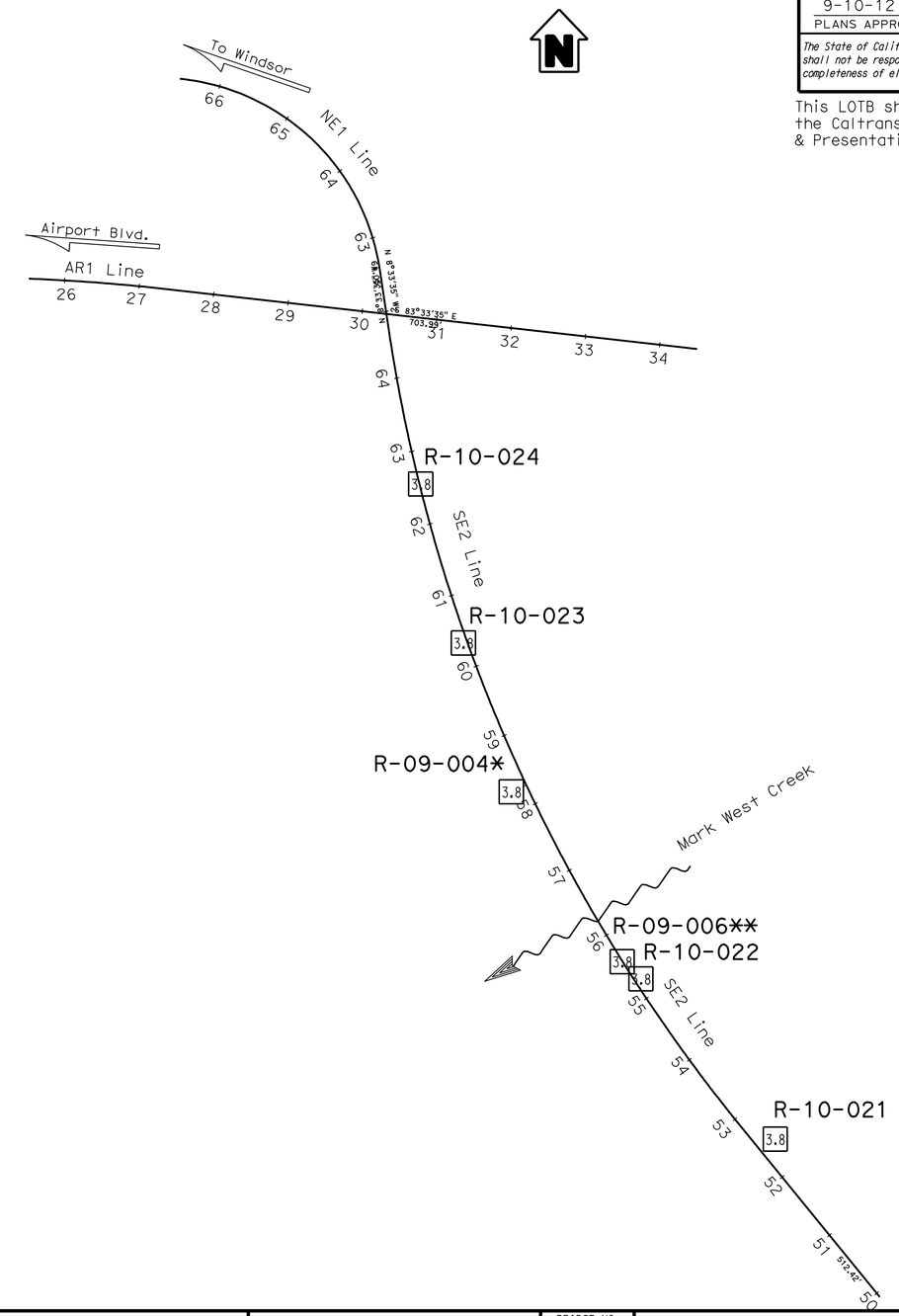


NOTE: * R-09-004: See structure plans, "LOG OF TEST BORINGS/ MARK WEST CREEK BRIDGE NB OFF-RAMP", Sheet 2 of 5, for details.

** R-09-006: See structure plans, "LOG OF TEST BORINGS/ MARD WEST CREEK BRIDGE NB OFF-RAMP", Sheet 3 of 5, for details.

C-31

| ENGINEERING SERVICES | GEOTECHNICAL SERVICES | STATE OF CALIFORNIA DEPARTMENT OF TRANSPORTATION | DIVISION OF ENGINEERING SERVICES OFFICE OF GEOTECHNICAL DESIGN BRANCH | BRIDGE NO. / POST MILES 25.6/26.9 | AIRPORT BOULEVARD NB OFF-RAMP LOG OF TEST BORINGS 1 of 5 |
|---|---|---|---|---|---|
| FUNCTIONAL SUPERVISOR NAME: H. Nikoui | DRAWN BY: M. Reynolds 11/10 CHECKED BY: M. Gaffney | FIELD INVESTIGATION BY: M. Hung | | | |
| OGS CIVIL LOG OF TEST BORINGS SHEET | ORIGINAL SCALE IN INCHES FOR REDUCED PLANS 0 1 2 3 | CU 04 EA 000209451 (3A23U1) | DISREGARD PRINTS BEARING EARLIER REVISION DATES | REVISION DATES 06-13-11 11-29-11 | SHEET OF |

FILE => 0400020945ga031.dgn

USERNAME => s135318 DATE PLOTTED => 13-SEP-2012 TIME PLOTTED => 13:32

| DIST | COUNTY | ROUTE | POST MILES TOTAL PROJECT | SHEET No | TOTAL SHEETS |
|---|---|---|---|---|---|
| 04 | Son | 101 | 25.6/29.2 | 66 | 615 |

REGISTERED CIVIL ENGINEER 05-23-11

9-10-12
PLANS APPROVAL DATE

REGISTERED PROFESSIONAL ENGINEER Meng-Hsi Hung No. 69739 Exp. 6-30-12 CIVIL STATE OF CALIFORNIA

*The State of California or its officers or agents shall not be responsible for the accuracy or completeness of electronic copies of this plan sheet.*

This LOTB sheet was prepared in accordance with the Caltrans Soil & Rock Logging, Classification, & Presentation Manual (2010 Edition).

NOTE: pp=unconfined compressive strength (tsf) as measured by pocket penetrometer.

(For Boring Location See Plan, LOTB Sheet 1 of 5)

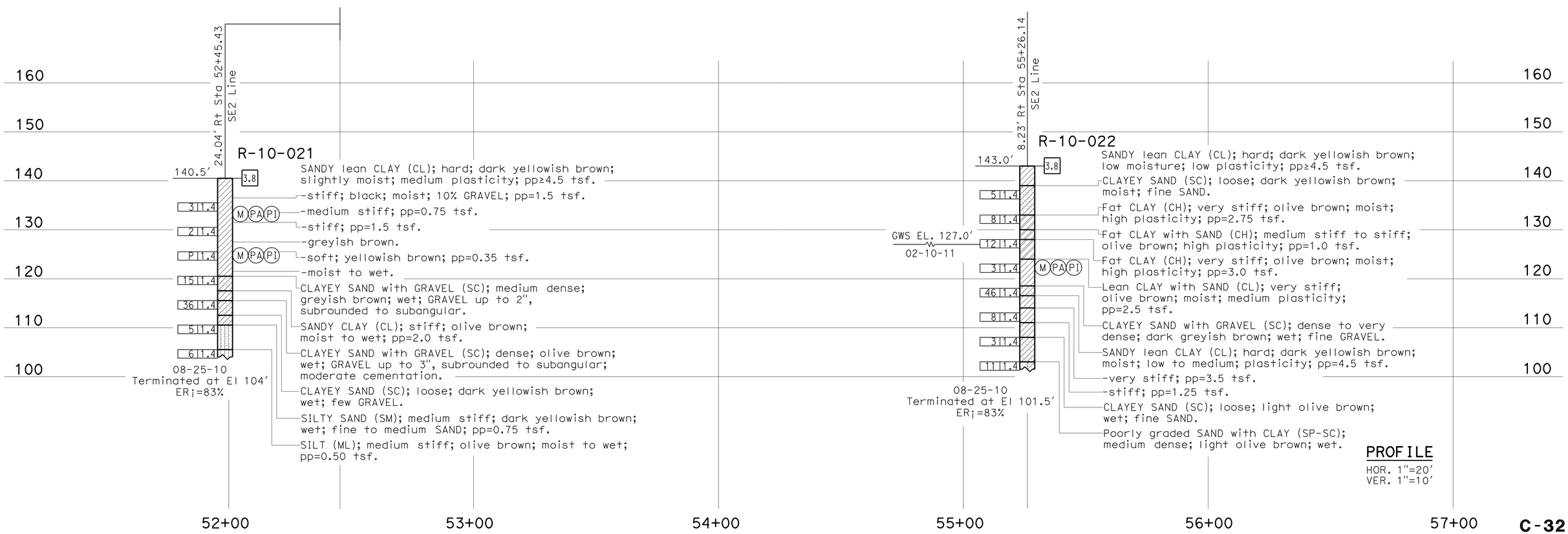


C-32

| ENGINEERING SERVICES | | GEOTECHNICAL SERVICES | STATE OF CALIFORNIA DEPARTMENT OF TRANSPORTATION | DIVISION OF ENGINEERING SERVICES OFFICE OF GEOTECHNICAL DESIGN BRANCH | BRIDGE NO. / POST MILES 25.6/26.9 | AIRPORT BOULEVARD NB OFF-RAMP LOG OF TEST BORINGS 2 of 5 |
|---|---|---|---|---|---|---|
| FUNCTIONAL SUPERVISOR | DRAWN BY: M. Reynolds 11/10 | FIELD INVESTIGATION BY: M. Hung | | | | |
| NAME: H. Nikoui | CHECKED BY: M. Gaffney | | | | | |

OGS CIVIL LOG OF TEST BORINGS SHEET

ORIGINAL SCALE IN INCHES FOR REDUCED PLANS 0 1 2 3

CU 04
EA 000209451 (3A23U1)

DISREGARD PRINTS BEARING EARLIER REVISION DATES 06-13-11

REVISION DATES | SHEET | OF

FILE => 0400020945ga032.dgn

USERNAME => s135318 DATE PLOTTED => 13-SEP-2012 TIME PLOTTED => 13:32

| DIST | COUNTY | ROUTE | POST MILES TOTAL PROJECT | SHEET No | TOTAL SHEETS |
|---|---|---|---|---|---|
| 04 | Son | 101 | 25.6/29.2 | 67 | 615 |

REGISTERED CIVIL ENGINEER 05-23-11

9-10-12
PLANS APPROVAL DATE

REGISTERED PROFESSIONAL ENGINEER Meng-Hsi Hung No. 69739 Exp. 6-30-12 CIVIL STATE OF CALIFORNIA

*The State of California or its officers or agents shall not be responsible for the accuracy or completeness of electronic copies of this plan sheet.*

This LOTB sheet was prepared in accordance with the Caltrans Soil & Rock Logging, Classification, & Presentation Manual (2010 Edition).

NOTE: pp=unconfined compressive strength (tsf) as measured by pocket penetrometer.

(For Boring Location See Plan, LOTB Sheet 1 of 5)

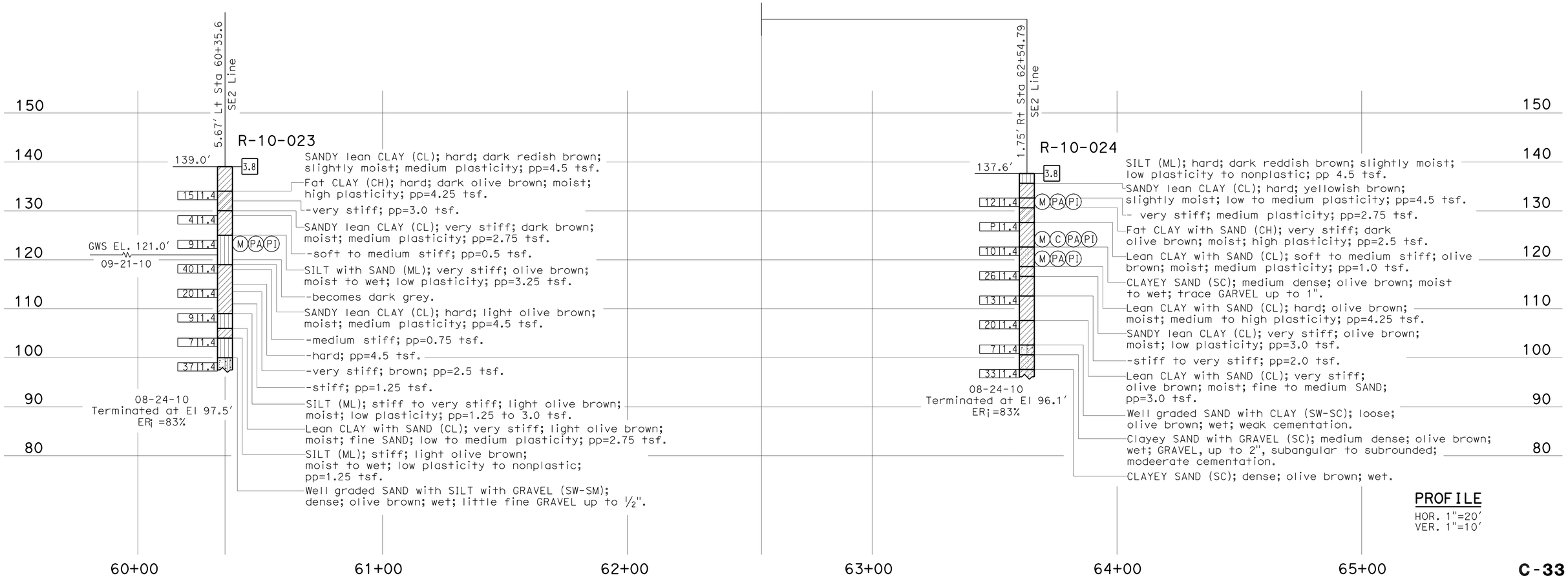


PROFILE
HOR. 1"=20'
VER. 1"=10'

C-33

| ENGINEERING SERVICES | | GEOTECHNICAL SERVICES | STATE OF CALIFORNIA DEPARTMENT OF TRANSPORTATION | DIVISION OF ENGINEERING SERVICES OFFICE OF GEOTECHNICAL DESIGN BRANCH | BRIDGE NO. | AIRPORT BOULEVARD NB OFF-RAMP |
|---|---|---|---|---|---|---|
| FUNCTIONAL SUPERVISOR | DRAWN BY: M. Reynolds 11/10 | FIELD INVESTIGATION BY: | | | POST MILES 25.6/26.9 | LOG OF TEST BORINGS 3 of 5 |
| NAME: H. Nikoui | CHECKED BY: M. Gaffney | M. Hung | | | | |

OGS CIVIL LOG OF TEST BORINGS SHEET

ORIGINAL SCALE IN INCHES FOR REDUCED PLANS 0 1 2 3

CU 04
EA 000209451 (3A23U1)

DISREGARD PRINTS BEARING EARLIER REVISION DATES 06-13-11

REVISION DATES | SHEET | OF

FILE => 0400020945ga033.dgn

USERNAME => s135318 DATE PLOTTED => 13-SEP-2012 TIME PLOTTED => 13:32

REFERENCE: CALTRANS SOIL & ROCK LOGGING, CLASSIFICATION, AND PRESENTATION MANUAL (2010)

| DIST | COUNTY | ROUTE | POST MILES TOTAL PROJECT | SHEET No | TOTAL SHEETS |
|---|---|---|---|---|---|
| 04 | Son | 101 | 25.6/29.2 | 68 | 615 |

REGISTERED CIVIL ENGINEER 05-23-11 DATE

9-10-12
PLANS APPROVAL DATE

REGISTERED PROFESSIONAL ENGINEER Meng-Hsi Hung No. 69739 Exp. 6-30-12 CIVIL STATE OF CALIFORNIA

*The State of California or its officers or agents shall not be responsible for the accuracy or completeness of electronic copies of this plan sheet.*

## CEMENTATION

| Description | Criteria |
|---|---|
| Weak | Crumbles or breaks with handling or little finger pressure. |
| Moderate | Crumbles or breaks with considerable finger pressure. |
| Strong | Will not crumble or break with finger pressure. |

## BOREHOLE IDENTIFICATION

| Symbol | Hole Type | Description |
|---|---|---|
| Size | A | Auger Boring (hollow or solid stem bucket) |
| Size | R<br>RW<br>RC<br>P | Rotary drilled boring (conventional)<br>Rotary drilled with self-casing wire-line<br>Rotary core with continuously-sampled, self-casing wire-line<br>Rotary percussion boring (air) |
| Size | R | Rotary drilled diamond core |
| Size | HD<br>HA | Hand driven (1-inch soil tube)<br>Hand Auger |
| ● | D | Dynamic Cone Penetration Boring |
| ▲ | CPT | Cone Penetration Test (ASTM D 5778) |
| ⬚ | O | Other (note on LOTB) |

Note: Size in inches.

## CONSISTENCY OF COHESIVE SOILS

| Description | Shear Strength (tsf) | Pocket Penetrometer Measurement, PP, (tsf) | Torvane Measurement, TV, (tsf) | Vane Shear Measurement, VS, (tsf) |
|---|---|---|---|---|
| Very Soft | Less than 0.12 | Less than 0.25 | Less than 0.12 | Less than 0.12 |
| Soft | 0.12 - 0.25 | 0.25 - 0.5 | 0.12 - 0.25 | 0.12 - 0.25 |
| Medium Stiff | 0.25 - 0.5 | 0.5 - 1 | 0.25 - 0.5 | 0.25 - 0.5 |
| Stiff | 0.5 - 1 | 1 - 2 | 0.5 - 1 | 0.5 - 1 |
| Very Stiff | 1 - 2 | 2 - 4 | 1 - 2 | 1 - 2 |
| Hard | Greater than 2 | Greater than 4 | Greater than 2 | Greater than 2 |

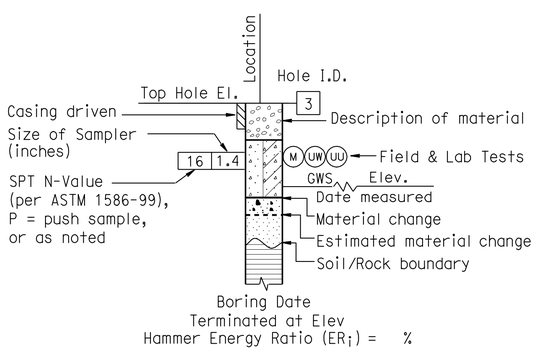


**ROTARY BORING**

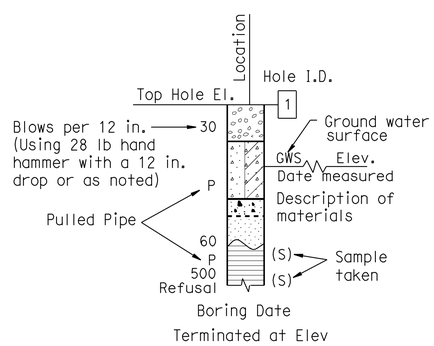


**HAND BORING**

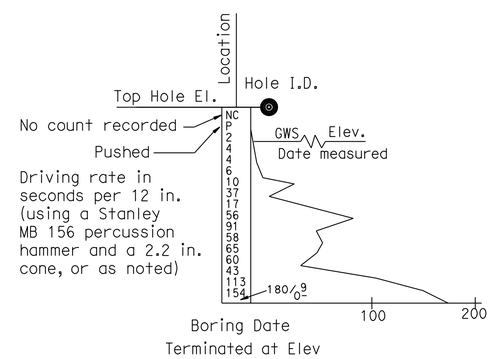


**DYNAMIC CONE PENETRATION BORING**

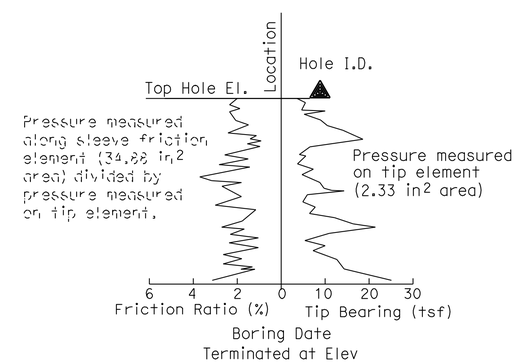


**CONE PENETRATION TEST (CPT) BORING**

C-34

| ENGINEERING SERVICES | GEOTECHNICAL SERVICES | STATE OF CALIFORNIA DEPARTMENT OF TRANSPORTATION | DIVISION OF ENGINEERING SERVICES OFFICE OF GEOTECHNICAL DESIGN BRANCH | BRIDGE NO. / POST MILE 25.6/26.9 | AIRPORT BOULEVARD NB OFF-RAMP LOG OF TEST BORINGS 4 of 5 |
|---|---|---|---|---|---|
| | PREPARED BY: M. Reynolds 11/10 | | | | |

GS LOTB SOIL LEGEND

ORIGINAL SCALE IN INCHES FOR REDUCED PLANS 0 1 2 3

CU 04
EA 000209451 (3A23U1)

DISREGARD PRINTS BEARING EARLIER REVISION DATES → 06-13-11

REVISION DATES | SHEET | OF

FILE => 0400020945ga034.dgn

USERNAME => s135318 DATE PLOTTED => 13-SEP-2012 TIME PLOTTED => 13:32

REFERENCE: CALTRANS SOIL & ROCK LOGGING, CLASSIFICATION, AND PRESENTATION MANUAL (2010)

| DIST | COUNTY | ROUTE | POST MILES TOTAL PROJECT | SHEET No | TOTAL SHEETS |
|---|---|---|---|---|---|
| 04 | Son | 101 | 25.6/29.2 | 69 | 615 |

REGISTERED CIVIL ENGINEER 05-23-11 DATE

9-10-12
PLANS APPROVAL DATE

REGISTERED PROFESSIONAL ENGINEER Meng-Hsi Hung No. 69739 Exp. 6-30-12 CIVIL STATE OF CALIFORNIA

*The State of California or its officers or agents shall not be responsible for the accuracy or completeness of electronic copies of this plan sheet.*

## GROUP SYMBOLS AND NAMES

| Graphic/Symbol | Group Names | Graphic/Symbol | Group Names |
|---|---|---|---|
| GW | Well-graded GRAVEL<br>Well-graded GRAVEL with SAND | CL | Lean CLAY<br>Lean CLAY with SAND<br>Lean CLAY with GRAVEL<br>SANDY lean CLAY<br>SANDY lean CLAY with GRAVEL<br>GRAVELLY lean CLAY<br>GRAVELLY lean CLAY with SAND |
| GP | Poorly-graded GRAVEL<br>Poorly-graded GRAVEL with SAND | | |
| GW-GM | Well-graded GRAVEL with SILT<br>Well-graded GRAVEL with SILT and SAND | CL-ML | SILTY CLAY<br>SILTY CLAY with SAND<br>SILTY CLAY with GRAVEL<br>SANDY SILTY CLAY<br>SANDY SILTY CLAY with GRAVEL<br>GRAVELLY SILTY CLAY<br>GRAVELLY SILTY CLAY with SAND |
| GW-GC | Well-graded GRAVEL with CLAY (or SILTY CLAY)<br>Well-graded GRAVEL with CLAY and SAND (or SILTY CLAY and SAND) | | |
| GP-GM | Poorly-graded GRAVEL with SILT<br>Poorly-graded GRAVEL with SILT and SAND | ML | SILT<br>SILT with SAND<br>SILT with GRAVEL<br>SANDY SILT<br>SANDY SILT with GRAVEL<br>GRAVELLY SILT<br>GRAVELLY SILT with SAND |
| GP-GC | Poorly-graded GRAVEL with CLAY (or SILTY CLAY)<br>Poorly-graded GRAVEL with CLAY and SAND (or SILTY CLAY and SAND) | | |
| GM | SILTY GRAVEL<br>SILTY GRAVEL with SAND | OL | ORGANIC lean CLAY<br>ORGANIC lean CLAY with SAND<br>ORGANIC lean CLAY with GRAVEL<br>SANDY ORGANIC lean CLAY<br>SANDY ORGANIC lean CLAY with GRAVEL<br>GRAVELLY ORGANIC lean CLAY<br>GRAVELLY ORGANIC lean CLAY with SAND |
| GC | CLAYEY GRAVEL<br>CLAYEY GRAVEL with SAND | | |
| GC-GM | SILTY, CLAYEY GRAVEL<br>SILTY, CLAYEY GRAVEL with SAND | OL | ORGANIC SILT<br>ORGANIC SILT with SAND<br>ORGANIC SILT with GRAVEL<br>SANDY ORGANIC SILT<br>SANDY ORGANIC SILT with GRAVEL<br>GRAVELLY ORGANIC SILT<br>GRAVELLY ORGANIC SILT with SAND |
| SW | Well-graded SAND<br>Well-graded SAND with GRAVEL | | |
| SP | Poorly-graded SAND<br>Poorly-graded SAND with GRAVEL | CH | Fat CLAY<br>Fat CLAY with SAND<br>Fat CLAY with GRAVEL<br>SANDY fat CLAY<br>SANDY fat CLAY with GRAVEL<br>GRAVELLY fat CLAY<br>GRAVELLY fat CLAY with SAND |
| SW-SM | Well-graded SAND with SILT<br>Well-graded SAND with SILT and GRAVEL | | |
| SW-SC | Well-graded SAND with CLAY (or SILTY CLAY)<br>Well-graded SAND with CLAY and GRAVEL (or SILTY CLAY and GRAVEL) | MH | Elastic SILT<br>Elastic SILT with SAND<br>Elastic SILT with GRAVEL<br>SANDY elastic SILT<br>SANDY elastic SILT with GRAVEL<br>GRAVELLY elastic SILT<br>GRAVELLY elastic SILT with SAND |
| SP-SM | Poorly-graded SAND with SILT<br>Poorly-graded SAND with SILT and GRAVEL | | |
| SP-SC | Poorly-graded SAND with CLAY (or SILTY CLAY)<br>Poorly-graded SAND with CLAY and GRAVEL (or SILTY CLAY and GRAVEL) | OH | ORGANIC fat CLAY<br>ORGANIC fat CLAY with SAND<br>ORGANIC fat CLAY with GRAVEL<br>SANDY ORGANIC fat CLAY<br>SANDY ORGANIC fat CLAY with GRAVEL<br>GRAVELLY ORGANIC fat CLAY<br>GRAVELLY ORGANIC fat CLAY with SAND |
| SM | SILTY SAND<br>SILTY SAND with GRAVEL | | |
| SC | CLAYEY SAND<br>CLAYEY SAND with GRAVEL | OH | ORGANIC elastic SILT<br>ORGANIC elastic SILT with SAND<br>ORGANIC elastic SILT with GRAVEL<br>SANDY ORGANIC elastic SILT<br>SANDY ORGANIC elastic SILT with GRAVEL<br>GRAVELLY ORGANIC elastic SILT<br>GRAVELLY ORGANIC elastic SILT with SAND |
| SC-SM | SILTY, CLAYEY SAND<br>SILTY, CLAYEY SAND with GRAVEL | | |
| PT | PEAT | OL/OH | ORGANIC SOIL<br>ORGANIC SOIL with SAND<br>ORGANIC SOIL with GRAVEL<br>SANDY ORGANIC SOIL<br>SANDY ORGANIC SOIL with GRAVEL<br>GRAVELLY ORGANIC SOIL<br>GRAVELLY ORGANIC SOIL with SAND |
| | COBBLES<br>COBBLES and BOULDERS<br>BOULDERS | | |

## FIELD AND LABORATORY TESTING

- (C) Consolidation (ASTM D 2435)
- (CL) Collapse Potential (ASTM D 5333)
- (CP) Compaction Curve (CTM 216)
- (CR) Corrosivity Testing (CTM 643, CTM 422, CTM 417)
- (CU) Consolidated Undrained Triaxial (ASTM D 4767)
- (DS) Direct Shear (ASTM D 3080)
- (EI) Expansion Index (ASTM D 4829)
- (M) Moisture Content (ASTM D 2216)
- (OC) Organic Content-% (ASTM D 2974)
- (P) Permeability (CTM 220)
- (PA) Particle Size Analysis (ASTM D 422)
- (PI) Plasticity Index (AASHTO T 90) Liquid Limit (AASHTO T 89)
- (PL) Point Load Index (ASTM D 5731)
- (PM) Pressure Meter
- (R) R-Value (CTM 301)
- (SE) Sand Equivalent (CTM 217)
- (SG) Specific Gravity (AASHTO T 100)
- (SL) Shrinkage Limit (ASTM D 427)
- (SW) Swell Potential (ASTM D 4546)
- (UC) Unconfined Compression-Soil (ASTM D 2166) Unconfined Compression-Rock (ASTM D 2938)
- (UU) Unconsolidated Undrained Triaxial (ASTM D 2850)
- (UW) Unit Weight (ASTM D 4767)

## APPARENT DENSITY OF COHESIONLESS SOILS

| Description | SPT $N_{60}$ (Blows / 12 in.) |
|---|---|
| Very Loose | 0 - 5 |
| Loose | 5 - 10 |
| Medium Dense | 10 - 30 |
| Dense | 30 - 50 |
| Very Dense | Greater than 50 |

## MOISTURE

| Description | Criteria |
|---|---|
| Dry | No discernable moisture |
| Moist | Moisture present, but no free water |
| Wet | Visible free water |

## PERCENT OR PROPORTION OF SOILS

| Description | Criteria |
|---|---|
| Trace | Particles are present but estimated to be less than 5% |
| Few | 5% - 10% |
| Little | 15% - 25% |
| Some | 30% - 45% |
| Mostly | 50% - 100% |

## PARTICLE SIZE

| Description | | Size (in.) |
|---|---|---|
| Boulder | | Greater than 12 |
| Cobble | | 3 - 12 |
| Gravel | Coarse | 3/4 - 3 |
| | Fine | 1/5 - 3/4 |
| Sand | Coarse | 1/16 - 1/5 |
| | Medium | 1/64 - 1/16 |
| | Fine | 1/300 - 1/64 |
| Silt and Clay | | Less than 1/300 |

C-35

| ENGINEERING SERVICES | GEOTECHNICAL SERVICES | STATE OF CALIFORNIA DEPARTMENT OF TRANSPORTATION | DIVISION OF ENGINEERING SERVICES OFFICE OF GEOTECHNICAL DESIGN BRANCH | BRIDGE NO. / POST MILE 25.6/26.9 | AIRPORT BOULEVARD NB OFF-RAMP LOG OF TEST BORINGS 5 of 5 |
|---|---|---|---|---|---|
| | PREPARED BY: M. Reynolds 11/10 | | | | |

GS LOTB SOIL LEGEND

ORIGINAL SCALE IN INCHES FOR REDUCED PLANS 0 1 2 3

CU 04
EA 000209451 (3A23U1)

DISREGARD PRINTS BEARING EARLIER REVISION DATES 06-13-11

REVISION DATES | SHEET | OF

FILE => 0400020945ga035.dgn

USERNAME => s135318 DATE PLOTTED => 13-SEP-2012 TIME PLOTTED => 13:32

| DIST | COUNTY | ROUTE | POST MILES TOTAL PROJECT | SHEET No | TOTAL SHEETS |
|---|---|---|---|---|---|
| 04 | Son | 101 | 25.6/29.2 | 70 | 615 |

REGISTERED CIVIL ENGINEER 05-23-11

9-10-12
PLANS APPROVAL DATE

REGISTERED PROFESSIONAL ENGINEER Meng-Hsi Hung No. 69739 Exp. 6-30-12 CIVIL STATE OF CALIFORNIA

*The State of California or its officers or agents shall not be responsible for the accuracy or completeness of electronic copies of this plan sheet.*

This LOTB sheet was prepared in accordance with the Caltrans Soil & Rock Logging, Classification, & Presentation Manual (2010 Edition).

## BENCH MARK

S116
Standard Bronze Disk
492.344' Rt. "CL101" Line, ℄ Rte. 101
Sta 63+52.43
N 1,948,932.008
E 6,340,455.452
Elev. 139.393

S111
Standard Bronze Disk
Set on walkway of Fulton Rd. O/C Br.
Sta. 45+19.32
N 1,947,274.458
E 6,341,378.505
Elev. 165.515

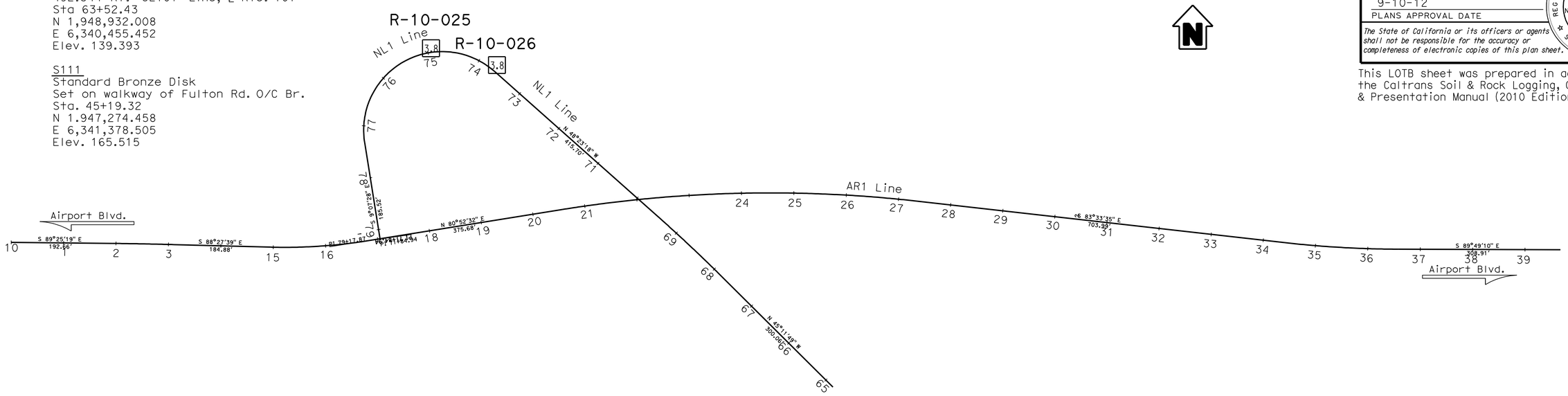


## PLAN
1"=100'

C-36

| ENGINEERING SERVICES | GEOTECHNICAL SERVICES | STATE OF CALIFORNIA DEPARTMENT OF TRANSPORTATION | DIVISION OF ENGINEERING SERVICES OFFICE OF GEOTECHNICAL DESIGN BRANCH | BRIDGE NO. / POST MILES 25.6/26.9 | AIRPORT BOULEVARD SB LOOP ON-RAMP LOG OF TEST BORINGS 1 of 4 |
|---|---|---|---|---|---|
| FUNCTIONAL SUPERVISOR NAME: H. Nikoui | DRAWN BY: M. Reynolds 11/10 CHECKED BY: M. Gaffney | FIELD INVESTIGATION BY: M. Hung | CU 04 EA 000209451 (3A23U1) | DISREGARD PRINTS BEARING EARLIER REVISION DATES 06-13-11 | SHEET OF |

OGS CIVIL LOG OF TEST BORINGS SHEET

ORIGINAL SCALE IN INCHES FOR REDUCED PLANS 0 1 2 3

FILE => 0400020945ga036.dgn

USERNAME => s135318 DATE PLOTTED => 13-SEP-2012 TIME PLOTTED => 13:33

| DIST | COUNTY | ROUTE | POST MILES TOTAL PROJECT | SHEET No | TOTAL SHEETS |
|---|---|---|---|---|---|
| 04 | Son | 101 | 25.6/29.2 | 71 | 615 |

REGISTERED CIVIL ENGINEER 05-23-11

9-10-12
PLANS APPROVAL DATE

REGISTERED PROFESSIONAL ENGINEER Meng-Hsi Hung No. 69739 Exp. 6-30-12 CIVIL STATE OF CALIFORNIA

*The State of California or its officers or agents shall not be responsible for the accuracy or completeness of electronic copies of this plan sheet.*

This LOTB sheet was prepared in accordance with the Caltrans Soil & Rock Logging, Classification, & Presentation Manual (2010 Edition).

(For Boring Location See Plan, LOTB Sheet 1 of 4)

NOTE: pp=unconfined compressive strength (tsf) as measured by pocket penetrometer.

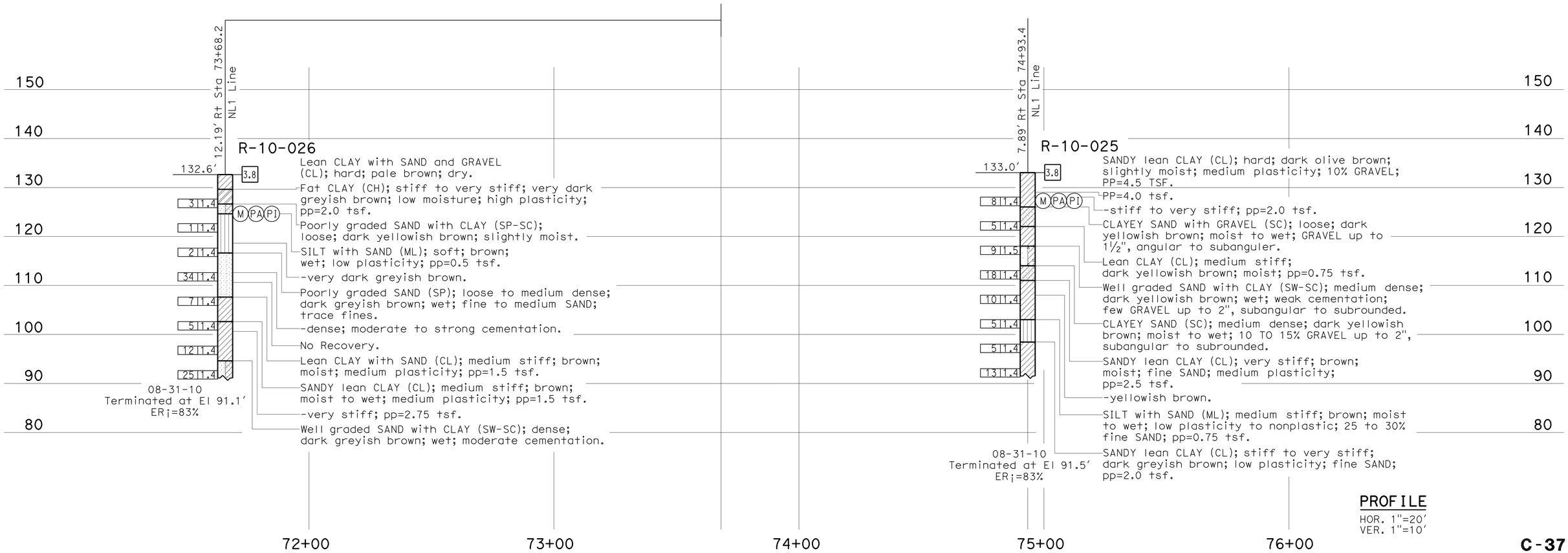


PROFILE
HOR. 1"=20'
VER. 1"=10'

C-37

| ENGINEERING SERVICES | GEOTECHNICAL SERVICES | STATE OF CALIFORNIA DEPARTMENT OF TRANSPORTATION | DIVISION OF ENGINEERING SERVICES OFFICE OF GEOTECHNICAL DESIGN BRANCH | BRIDGE NO. / POST MILES 25.6/26.9 | AIRPORT BOULEVARD SB LOOP ON-RAMP LOG OF TEST BORINGS 2 of 4 |
|---|---|---|---|---|---|
| FUNCTIONAL SUPERVISOR NAME: H. Nikoui | DRAWN BY: M. Reynolds 11/10 CHECKED BY: M. Gaffney | FIELD INVESTIGATION BY: M. Hung | CU 04 EA 000209451 (3A23U1) | | |

OGS CIVIL LOG OF TEST BORINGS SHEET

ORIGINAL SCALE IN INCHES FOR REDUCED PLANS 0 1 2 3

DISREGARD PRINTS BEARING EARLIER REVISION DATES 06-13-11 12-08-11

REVISION DATES | SHEET | OF

FILE => 0400020945ga037.dgn

USERNAME => s128843 DATE PLOTTED => 13-SEP-2012 TIME PLOTTED => 13:22

REFERENCE: CALTRANS SOIL & ROCK LOGGING, CLASSIFICATION, AND PRESENTATION MANUAL (2010)

| DIST | COUNTY | ROUTE | POST MILES TOTAL PROJECT | SHEET No | TOTAL SHEETS |
|---|---|---|---|---|---|
| 04 | Son | 101 | 25.6/29.2 | 72 | 615 |

REGISTERED CIVIL ENGINEER 05-23-11 DATE

9-10-12
PLANS APPROVAL DATE

REGISTERED PROFESSIONAL ENGINEER Meng-Hsi Hung No. 69739 Exp. 6-30-12 CIVIL STATE OF CALIFORNIA

*The State of California or its officers or agents shall not be responsible for the accuracy or completeness of electronic copies of this plan sheet.*

## CEMENTATION

| Description | Criteria |
|---|---|
| Weak | Crumbles or breaks with handling or little finger pressure. |
| Moderate | Crumbles or breaks with considerable finger pressure. |
| Strong | Will not crumble or break with finger pressure. |

## BOREHOLE IDENTIFICATION

| Symbol | Hole Type | Description |
|---|---|---|
| Size | A | Auger Boring (hollow or solid stem bucket) |
| Size | R<br>RW<br>RC<br>P | Rotary drilled boring (conventional)<br>Rotary drilled with self-casing wire-line<br>Rotary core with continuously-sampled, self-casing wire-line<br>Rotary percussion boring (air) |
| Size | R | Rotary drilled diamond core |
| Size | HD<br>HA | Hand driven (1-inch soil tube)<br>Hand Auger |
| ● | D | Dynamic Cone Penetration Boring |
| ▲ | CPT | Cone Penetration Test (ASTM D 5778) |
| ⬚ | O | Other (note on LOTB) |

Note: Size in inches.

## CONSISTENCY OF COHESIVE SOILS

| Description | Shear Strength (tsf) | Pocket Penetrometer Measurement, PP, (tsf) | Torvane Measurement, TV, (tsf) | Vane Shear Measurement, VS, (tsf) |
|---|---|---|---|---|
| Very Soft | Less than 0.12 | Less than 0.25 | Less than 0.12 | Less than 0.12 |
| Soft | 0.12 - 0.25 | 0.25 - 0.5 | 0.12 - 0.25 | 0.12 - 0.25 |
| Medium Stiff | 0.25 - 0.5 | 0.5 - 1 | 0.25 - 0.5 | 0.25 - 0.5 |
| Stiff | 0.5 - 1 | 1 - 2 | 0.5 - 1 | 0.5 - 1 |
| Very Stiff | 1 - 2 | 2 - 4 | 1 - 2 | 1 - 2 |
| Hard | Greater than 2 | Greater than 4 | Greater than 2 | Greater than 2 |

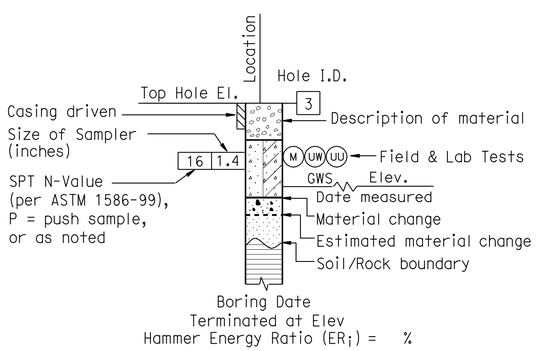


**ROTARY BORING**

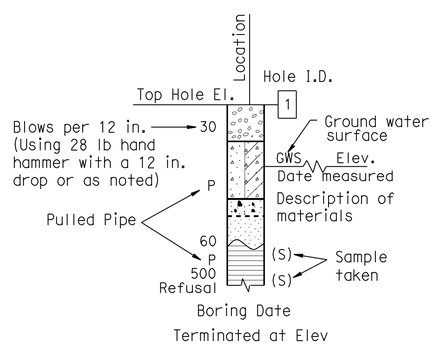


**HAND BORING**

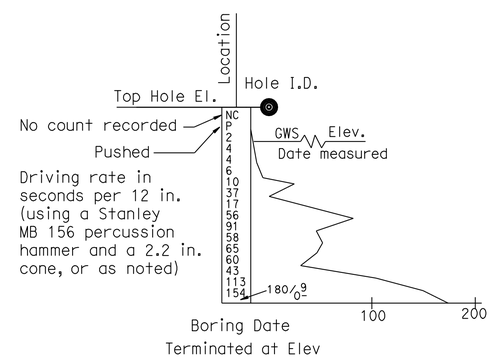


**DYNAMIC CONE PENETRATION BORING**

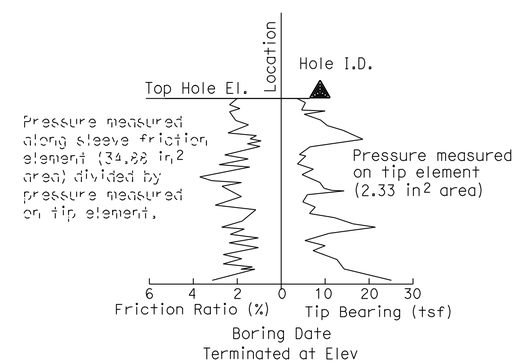


**CONE PENETRATION TEST (CPT) BORING**

C-38

| ENGINEERING SERVICES | GEOTECHNICAL SERVICES | STATE OF CALIFORNIA DEPARTMENT OF TRANSPORTATION | DIVISION OF ENGINEERING SERVICES OFFICE OF GEOTECHNICAL DESIGN BRANCH | BRIDGE NO. / POST MILE 25.6/26.9 | AIRPORT BOULEVARD SB LOOP ON-RAMP LOG OF TEST BORINGS 3 of 4 |
|---|---|---|---|---|---|
| | PREPARED BY: M. Reynolds 11/10 | | | | |

GS LOTB SOIL LEGEND

ORIGINAL SCALE IN INCHES FOR REDUCED PLANS 0 1 2 3

CU 04
EA 000209451 (3A23U1)

DISREGARD PRINTS BEARING EARLIER REVISION DATES → 06-13-11

REVISION DATES | SHEET | OF

FILE => 0400020945ga038.dgn

USERNAME => s128843 DATE PLOTTED => 13-SEP-2012 TIME PLOTTED => 13:22

REFERENCE: CALTRANS SOIL & ROCK LOGGING, CLASSIFICATION, AND PRESENTATION MANUAL (2010)

| DIST | COUNTY | ROUTE | POST MILES TOTAL PROJECT | SHEET No | TOTAL SHEETS |
|---|---|---|---|---|---|
| 04 | Son | 101 | 25.6/29.2 | 73 | 615 |

REGISTERED CIVIL ENGINEER 05-23-11 DATE

9-10-12
PLANS APPROVAL DATE

REGISTERED PROFESSIONAL ENGINEER Meng-Hsi Hung No. 69739 Exp. 6-30-12 CIVIL STATE OF CALIFORNIA

*The State of California or its officers or agents shall not be responsible for the accuracy or completeness of electronic copies of this plan sheet.*

## GROUP SYMBOLS AND NAMES

| Graphic/Symbol | Group Names | Graphic/Symbol | Group Names |
|---|---|---|---|
| GW | Well-graded GRAVEL<br>Well-graded GRAVEL with SAND | CL | Lean CLAY<br>Lean CLAY with SAND<br>Lean CLAY with GRAVEL<br>SANDY lean CLAY<br>SANDY lean CLAY with GRAVEL<br>GRAVELLY lean CLAY<br>GRAVELLY lean CLAY with SAND |
| GP | Poorly-graded GRAVEL<br>Poorly-graded GRAVEL with SAND | | |
| GW-GM | Well-graded GRAVEL with SILT<br>Well-graded GRAVEL with SILT and SAND | CL-ML | SILTY CLAY<br>SILTY CLAY with SAND<br>SILTY CLAY with GRAVEL<br>SANDY SILTY CLAY<br>SANDY SILTY CLAY with GRAVEL<br>GRAVELLY SILTY CLAY<br>GRAVELLY SILTY CLAY with SAND |
| GW-GC | Well-graded GRAVEL with CLAY (or SILTY CLAY)<br>Well-graded GRAVEL with CLAY and SAND (or SILTY CLAY and SAND) | | |
| GP-GM | Poorly-graded GRAVEL with SILT<br>Poorly-graded GRAVEL with SILT and SAND | ML | SILT<br>SILT with SAND<br>SILT with GRAVEL<br>SANDY SILT<br>SANDY SILT with GRAVEL<br>GRAVELLY SILT<br>GRAVELLY SILT with SAND |
| GP-GC | Poorly-graded GRAVEL with CLAY (or SILTY CLAY)<br>Poorly-graded GRAVEL with CLAY and SAND (or SILTY CLAY and SAND) | | |
| GM | SILTY GRAVEL<br>SILTY GRAVEL with SAND | OL | ORGANIC lean CLAY<br>ORGANIC lean CLAY with SAND<br>ORGANIC lean CLAY with GRAVEL<br>SANDY ORGANIC lean CLAY<br>SANDY ORGANIC lean CLAY with GRAVEL<br>GRAVELLY ORGANIC lean CLAY<br>GRAVELLY ORGANIC lean CLAY with SAND |
| GC | CLAYEY GRAVEL<br>CLAYEY GRAVEL with SAND | | |
| GC-GM | SILTY, CLAYEY GRAVEL<br>SILTY, CLAYEY GRAVEL with SAND | OL | ORGANIC SILT<br>ORGANIC SILT with SAND<br>ORGANIC SILT with GRAVEL<br>SANDY ORGANIC SILT<br>SANDY ORGANIC SILT with GRAVEL<br>GRAVELLY ORGANIC SILT<br>GRAVELLY ORGANIC SILT with SAND |
| SW | Well-graded SAND<br>Well-graded SAND with GRAVEL | | |
| SP | Poorly-graded SAND<br>Poorly-graded SAND with GRAVEL | CH | Fat CLAY<br>Fat CLAY with SAND<br>Fat CLAY with GRAVEL<br>SANDY fat CLAY<br>SANDY fat CLAY with GRAVEL<br>GRAVELLY fat CLAY<br>GRAVELLY fat CLAY with SAND |
| SW-SM | Well-graded SAND with SILT<br>Well-graded SAND with SILT and GRAVEL | | |
| SW-SC | Well-graded SAND with CLAY (or SILTY CLAY)<br>Well-graded SAND with CLAY and GRAVEL (or SILTY CLAY and GRAVEL) | MH | Elastic SILT<br>Elastic SILT with SAND<br>Elastic SILT with GRAVEL<br>SANDY elastic SILT<br>SANDY elastic SILT with GRAVEL<br>GRAVELLY elastic SILT<br>GRAVELLY elastic SILT with SAND |
| SP-SM | Poorly-graded SAND with SILT<br>Poorly-graded SAND with SILT and GRAVEL | | |
| SP-SC | Poorly-graded SAND with CLAY (or SILTY CLAY)<br>Poorly-graded SAND with CLAY and GRAVEL (or SILTY CLAY and GRAVEL) | OH | ORGANIC fat CLAY<br>ORGANIC fat CLAY with SAND<br>ORGANIC fat CLAY with GRAVEL<br>SANDY ORGANIC fat CLAY<br>SANDY ORGANIC fat CLAY with GRAVEL<br>GRAVELLY ORGANIC fat CLAY<br>GRAVELLY ORGANIC fat CLAY with SAND |
| SM | SILTY SAND<br>SILTY SAND with GRAVEL | | |
| SC | CLAYEY SAND<br>CLAYEY SAND with GRAVEL | OH | ORGANIC elastic SILT<br>ORGANIC elastic SILT with SAND<br>ORGANIC elastic SILT with GRAVEL<br>SANDY ORGANIC elastic SILT<br>SANDY ORGANIC elastic SILT with GRAVEL<br>GRAVELLY ORGANIC elastic SILT<br>GRAVELLY ORGANIC elastic SILT with SAND |
| SC-SM | SILTY, CLAYEY SAND<br>SILTY, CLAYEY SAND with GRAVEL | | |
| PT | PEAT | OL/OH | ORGANIC SOIL<br>ORGANIC SOIL with SAND<br>ORGANIC SOIL with GRAVEL<br>SANDY ORGANIC SOIL<br>SANDY ORGANIC SOIL with GRAVEL<br>GRAVELLY ORGANIC SOIL<br>GRAVELLY ORGANIC SOIL with SAND |
| | COBBLES<br>COBBLES and BOULDERS<br>BOULDERS | | |

## FIELD AND LABORATORY TESTING

- (C) Consolidation (ASTM D 2435)
- (CL) Collapse Potential (ASTM D 5333)
- (CP) Compaction Curve (CTM 216)
- (CR) Corrosivity Testing (CTM 643, CTM 422, CTM 417)
- (CU) Consolidated Undrained Triaxial (ASTM D 4767)
- (DS) Direct Shear (ASTM D 3080)
- (EI) Expansion Index (ASTM D 4829)
- (M) Moisture Content (ASTM D 2216)
- (OC) Organic Content-% (ASTM D 2974)
- (P) Permeability (CTM 220)
- (PA) Particle Size Analysis (ASTM D 422)
- (PI) Plasticity Index (AASHTO T 90) Liquid Limit (AASHTO T 89)
- (PL) Point Load Index (ASTM D 5731)
- (PM) Pressure Meter
- (R) R-Value (CTM 301)
- (SE) Sand Equivalent (CTM 217)
- (SG) Specific Gravity (AASHTO T 100)
- (SL) Shrinkage Limit (ASTM D 427)
- (SW) Swell Potential (ASTM D 4546)
- (UC) Unconfined Compression-Soil (ASTM D 2166) Unconfined Compression-Rock (ASTM D 2938)
- (UU) Unconsolidated Undrained Triaxial (ASTM D 2850)
- (UW) Unit Weight (ASTM D 4767)

## APPARENT DENSITY OF COHESIONLESS SOILS

| Description | SPT $N_{60}$ (Blows / 12 in.) |
|---|---|
| Very Loose | 0 - 5 |
| Loose | 5 - 10 |
| Medium Dense | 10 - 30 |
| Dense | 30 - 50 |
| Very Dense | Greater than 50 |

## MOISTURE

| Description | Criteria |
|---|---|
| Dry | No discernable moisture |
| Moist | Moisture present, but no free water |
| Wet | Visible free water |

## PERCENT OR PROPORTION OF SOILS

| Description | Criteria |
|---|---|
| Trace | Particles are present but estimated to be less than 5% |
| Few | 5% - 10% |
| Little | 15% - 25% |
| Some | 30% - 45% |
| Mostly | 50% - 100% |

## PARTICLE SIZE

| Description | | Size (in.) |
|---|---|---|
| Boulder | | Greater than 12 |
| Cobble | | 3 - 12 |
| Gravel | Coarse | 3/4 - 3 |
| | Fine | 1/5 - 3/4 |
| Sand | Coarse | 1/16 - 1/5 |
| | Medium | 1/64 - 1/16 |
| | Fine | 1/300 - 1/64 |
| Silt and Clay | | Less than 1/300 |



ENGINEERING SERVICES

GEOTECHNICAL SERVICES
PREPARED BY: M. Reynolds 11/10

STATE OF CALIFORNIA DEPARTMENT OF TRANSPORTATION

DIVISION OF ENGINEERING SERVICES OFFICE OF GEOTECHNICAL DESIGN BRANCH

BRIDGE NO.
POST MILE 25.6/26.9

AIRPORT BOULEVARD SB LOOP ON-RAMP
LOG OF TEST BORINGS 4 of 4

GS LOTB SOIL LEGEND

ORIGINAL SCALE IN INCHES FOR REDUCED PLANS 0 1 2 3

CU 04
EA 000209451 (3A23U1)

DISREGARD PRINTS BEARING EARLIER REVISION DATES 061311

REVISION DATES SHEET OF

FILE => 0400020945ga039.dgn

USERNAME => s128843 DATE PLOTTED => 13-SEP-2012 TIME PLOTTED => 13:23

| Dist | COUNTY | ROUTE | POST MILES TOTAL PROJECT | SHEET No. | TOTAL SHEETS |
|---|---|---|---|---|---|
| 04 | Son | 101 | 25.6/29.2 | 74 | 615 |

REGISTERED CIVIL ENGINEER 8/3/11 DATE

9-10-12
PLANS APPROVAL DATE

REGISTERED PROFESSIONAL ENGINEER Jiangfan Chen No. 77248 Exp. 6-30-13 CIVIL STATE OF CALIFORNIA

*THE STATE OF CALIFORNIA OR ITS OFFICERS OR AGENTS SHALL NOT BE RESPONSIBLE FOR THE ACCURACY OR COMPLETENESS OF SCANNED COPIES OF THIS PLAN SHEET.*

## TEMPORARY WATER POLLUTION CONTROL QUANTITIES

| ITEM | UNIT | STATION | QUANTITY | STATION | QUANTITY | TOTAL |
|---|---|---|---|---|---|---|
| TEMPORARY HYDRAULIC MULCH (BONDED FIBER MATRIX) | SQYD | W 1110+00 TO W 1199+15 | 30000 | CL101 34+49 TO CL101 86+76 | 570000 | 600000 |
| TEMPORARY FIBER ROLLS | LF | W 1110+00 TO W 1199+15 | 8000 | CL101 34+49 TO CL101 86+76 | 57000 | 65000 |
| TEMPORARY SILT FENCE | LF | W 1110+00 TO W 1199+15 | 6000 | CL101 34+49 TO CL101 86+76 | 24000 | 30000 |
| TEMPORARY FENCE (TYPE ESA) | LF | W 1110+00 TO W 1199+15 | | CL101 34+49 TO CL101 86+76 | 4907 | 4907 |
| TEMPORARY CHECK DAM | LF | W 1110+00 TO W 1199+15 | 1100 | CL101 34+49 TO CL101 86+76 | 1200 | 2300 |
| TEMPORARY DRAINAGE INLET PROTECTION | EA | W 1110+00 TO W 1199+15 | 20 | CL101 34+49 TO CL101 86+76 | 80 | 100 |
| TEMPORARY CONSTRUCTION ENTRANCE | EA | W 1110+00 TO W 1199+15 | 4 | CL101 34+49 TO CL101 86+76 | 46 | 50 |
| TEMPORARY COVER | SQYD | W 1110+00 TO W 1199+15 | 1000 | CL101 34+49 TO CL101 86+76 | 29000 | 30000 |
| MOVE IN/MOVE OUT (TEMPORARY EROSION CONTROL) | EA | W 1110+00 TO W 1199+15 | 4 | CL101 34+49 TO CL101 86+76 | 8 | 12 |
| TEMPORARY CONSTRUCTION ROADWAY | CY | W 1110+00 TO W 1199+15 | 0 | CL101 34+49 TO CL101 86+76 | 2000 | 2000 |
| TEMPORARY REINFORCED SILT FENCE | LF | W 1110+00 TO W 1199+15 | 0 | CL101 34+49 TO CL101 86+76 | 3000 | 3000 |
| TEMPORARY GRAVEL BAG BERM | LF | W 1110+00 TO W 1199+15 | 0 | CL101 34+49 TO CL101 86+76 | 250 | 250 |

# TEMPORARY WATER POLLUTION CONTROL QUANTITIES

**WPCQ-1**

STATE OF CALIFORNIA - DEPARTMENT OF TRANSPORTATION
Caltrans® WATER QUALITY

FUNCTIONAL SUPERVISOR: KAMRAN NAKHJIRI
CALCULATED-DESIGNED BY: JIANGFAN CHEN
CHECKED BY: KAMRAN NAKHJIRI
REVISED BY
DATE REVISED

LAST REVISION 06-20-11
DATE PLOTTED => 13-SEP-2012
TIME PLOTTED => 13:23

| Dist | COUNTY | ROUTE | POST MILES TOTAL PROJECT | SHEET No. | TOTAL SHEETS |
|---|---|---|---|---|---|
| 04 | Son | 101 | 25.6/29.2 | 75 | 615 |

LICENSED LANDSCAPE ARCHITECT

9-10-12
PLANS APPROVAL DATE

LICENSED LANDSCAPE ARCHITECT
JENNIFER EGAWA No. 5088
SIGNATURE
7-31-12
Renewal Date
8-4-11
Date
STATE OF CALIFORNIA

*THE STATE OF CALIFORNIA OR ITS OFFICERS OR AGENTS SHALL NOT BE RESPONSIBLE FOR THE ACCURACY OR COMPLETENESS OF SCANNED COPIES OF THIS PLAN SHEET.*

NOTE:

FOR ACCURATE RIGHT OF WAY DATA, CONTACT RIGHT OF WAY ENGINEERING AT THE DISTRICT OFFICE.

## LEGEND

- EROSION CONTROL (TYPE 1)
- EROSION CONTROL (TYPE 2)
- EROSION CONTROL (TYPE 3)
- MULCH
- FIBER ROLLS
- TFESA — TEMPORARY FENCE (TYPE ESA)

## ABBREVIATIONS

| | |
|---|---|
| CY | CUBIC YARD |
| ERC | EROSION CONTROL |
| ESA | ENVIRONMENTALLY SENSITIVE AREA |
| RECP | ROLLED EROSION CONTROL PRODUCT (NETTING) |

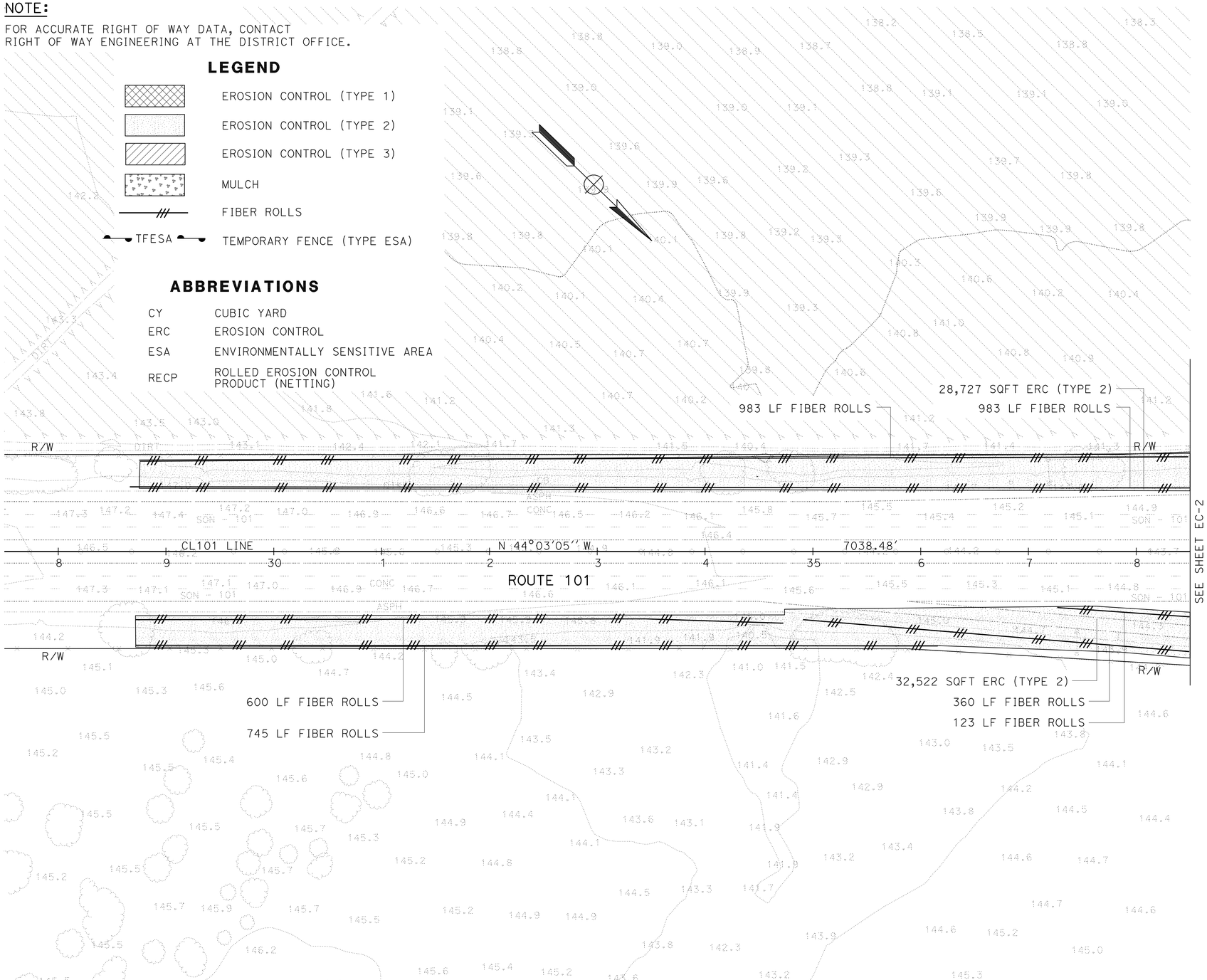


THIS PLAN ACCURATE FOR EROSION CONTROL WORK ONLY.

# EROSION CONTROL PLAN

SCALE: 1" = 50'

**EC-1**

STATE OF CALIFORNIA - DEPARTMENT OF TRANSPORTATION
Caltrans® WATER QUALITY

SENIOR LANDSCAPE ARCHITECT: DAVID YAM

CALCULATED-DESIGNED BY: JENNIFER EGAWA
CHECKED BY: ALEX MCDONALD

REVISED BY | DATE REVISED

LAST REVISION 07-07-11
DATE PLOTTED => 13-SEP-2012
TIME PLOTTED => 13:23

| Dist | COUNTY | ROUTE | POST MILES TOTAL PROJECT | SHEET No. | TOTAL SHEETS |
|---|---|---|---|---|---|
| 04 | Son | 101 | 25.6/29.2 | 76 | 615 |

LICENSED LANDSCAPE ARCHITECT

9-10-12
PLANS APPROVAL DATE

LICENSED LANDSCAPE ARCHITECT
JENNIFER EGAWA No. 5088
Signature
7-31-12
Renewal Date
8-4-11
Date
STATE OF CALIFORNIA

*THE STATE OF CALIFORNIA OR ITS OFFICERS OR AGENTS SHALL NOT BE RESPONSIBLE FOR THE ACCURACY OR COMPLETENESS OF SCANNED COPIES OF THIS PLAN SHEET.*

**NOTE:**

FOR ACCURATE RIGHT OF WAY DATA, CONTACT RIGHT OF WAY ENGINEERING AT THE DISTRICT OFFICE.

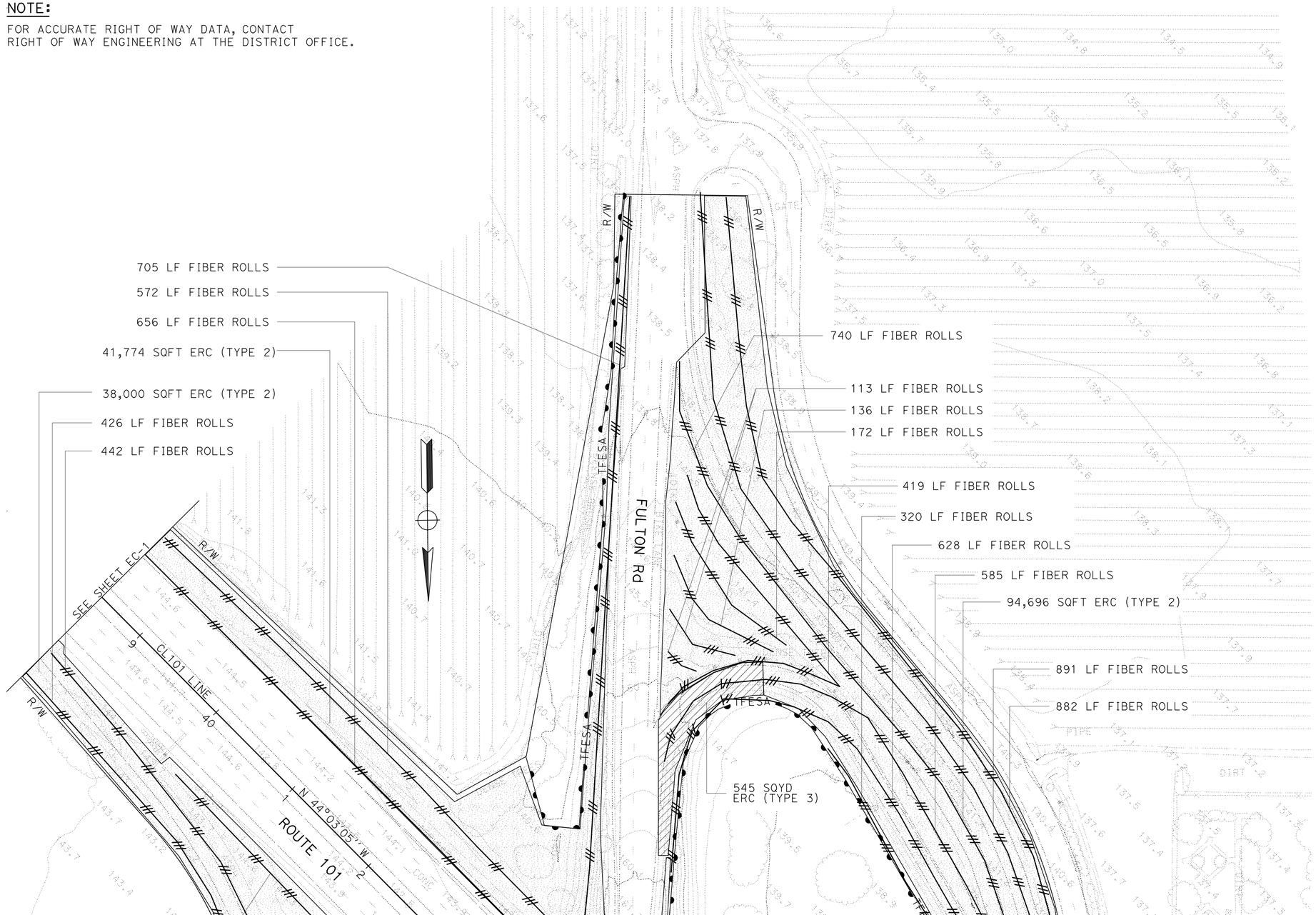


# EROSION CONTROL PLAN

SCALE: 1" = 50'

**EC-2**

THIS PLAN ACCURATE FOR EROSION CONTROL WORK ONLY.

STATE OF CALIFORNIA - DEPARTMENT OF TRANSPORTATION
Caltrans® WATER QUALITY

SENIOR LANDSCAPE ARCHITECT: DAVID YAM

CALCULATED-DESIGNED BY: JENNIFER EGAWA
CHECKED BY: ALEX MCDONALD

REVISED BY
DATE REVISED

LAST REVISION DATE PLOTTED => 13-SEP-2012
TIME PLOTTED => 13:23
07-07-11

BORDER LAST REVISED 7/2/2010

USERNAME => s128843
DGN FILE => 0400020945ge002.dgn

RELATIVE BORDER SCALE IS IN INCHES 0 1 2 3

UNIT 0792

PROJECT NUMBER & PHASE 04000209451

| Dist | COUNTY | ROUTE | POST MILES TOTAL PROJECT | SHEET No. | TOTAL SHEETS |
|---|---|---|---|---|---|
| 04 | Son | 101 | 25.6/29.2 | 77 | 615 |

LICENSED LANDSCAPE ARCHITECT

9-10-12
PLANS APPROVAL DATE

LICENSED LANDSCAPE ARCHITECT
JENNIFER EGAWA No. 5088
Signature
7-31-12
Renewal Date
8-4-11
Date
STATE OF CALIFORNIA

*THE STATE OF CALIFORNIA OR ITS OFFICERS OR AGENTS SHALL NOT BE RESPONSIBLE FOR THE ACCURACY OR COMPLETENESS OF SCANNED COPIES OF THIS PLAN SHEET.*

NOTE:

FOR ACCURATE RIGHT OF WAY DATA, CONTACT RIGHT OF WAY ENGINEERING AT THE DISTRICT OFFICE.

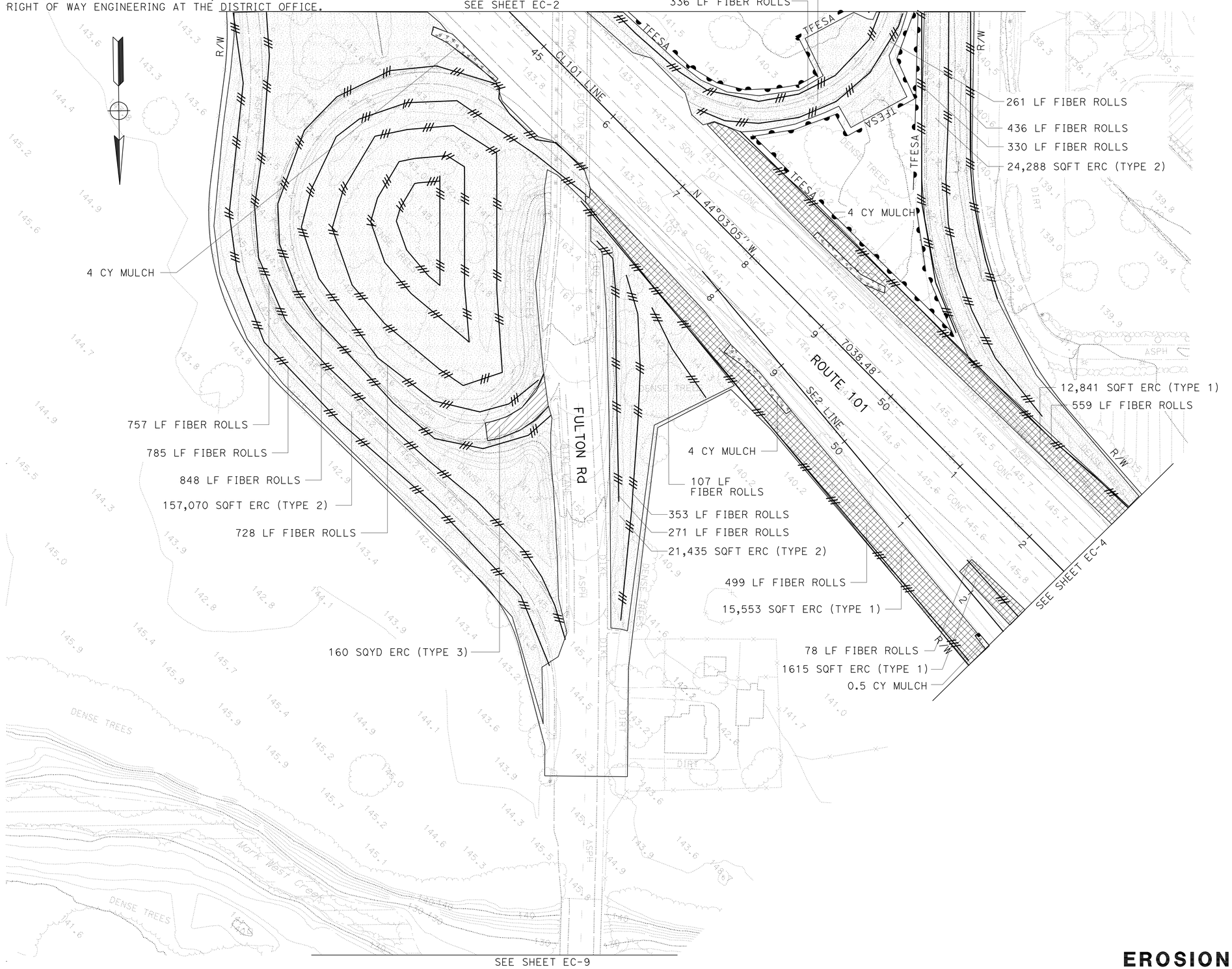


THIS PLAN ACCURATE FOR EROSION CONTROL WORK ONLY.

# EROSION CONTROL PLAN

SCALE: 1" = 50'

**EC-3**

STATE OF CALIFORNIA - DEPARTMENT OF TRANSPORTATION
Caltrans
WATER QUALITY

SENIOR LANDSCAPE ARCHITECT: DAVID YAM
CALCULATED-DESIGNED BY: JENNIFER EGAWA
CHECKED BY: ALEX MCDONALD
REVISED BY
DATE REVISED

LAST REVISION 07-07-11
DATE PLOTTED => 13-SEP-2012
TIME PLOTTED => 13:23

| Dist | COUNTY | ROUTE | POST MILES TOTAL PROJECT | SHEET No. | TOTAL SHEETS |
|---|---|---|---|---|---|
| 04 | Son | 101 | 25.6/29.2 | 78 | 615 |

LICENSED LANDSCAPE ARCHITECT

9-10-12
PLANS APPROVAL DATE

LICENSED LANDSCAPE ARCHITECT
JENNIFER EGAWA No. 5088
Signature
7-31-12
Renewal Date
8-4-11
Date
STATE OF CALIFORNIA

*THE STATE OF CALIFORNIA OR ITS OFFICERS OR AGENTS SHALL NOT BE RESPONSIBLE FOR THE ACCURACY OR COMPLETENESS OF SCANNED COPIES OF THIS PLAN SHEET.*

**NOTE:**

FOR ACCURATE RIGHT OF WAY DATA, CONTACT RIGHT OF WAY ENGINEERING AT THE DISTRICT OFFICE.

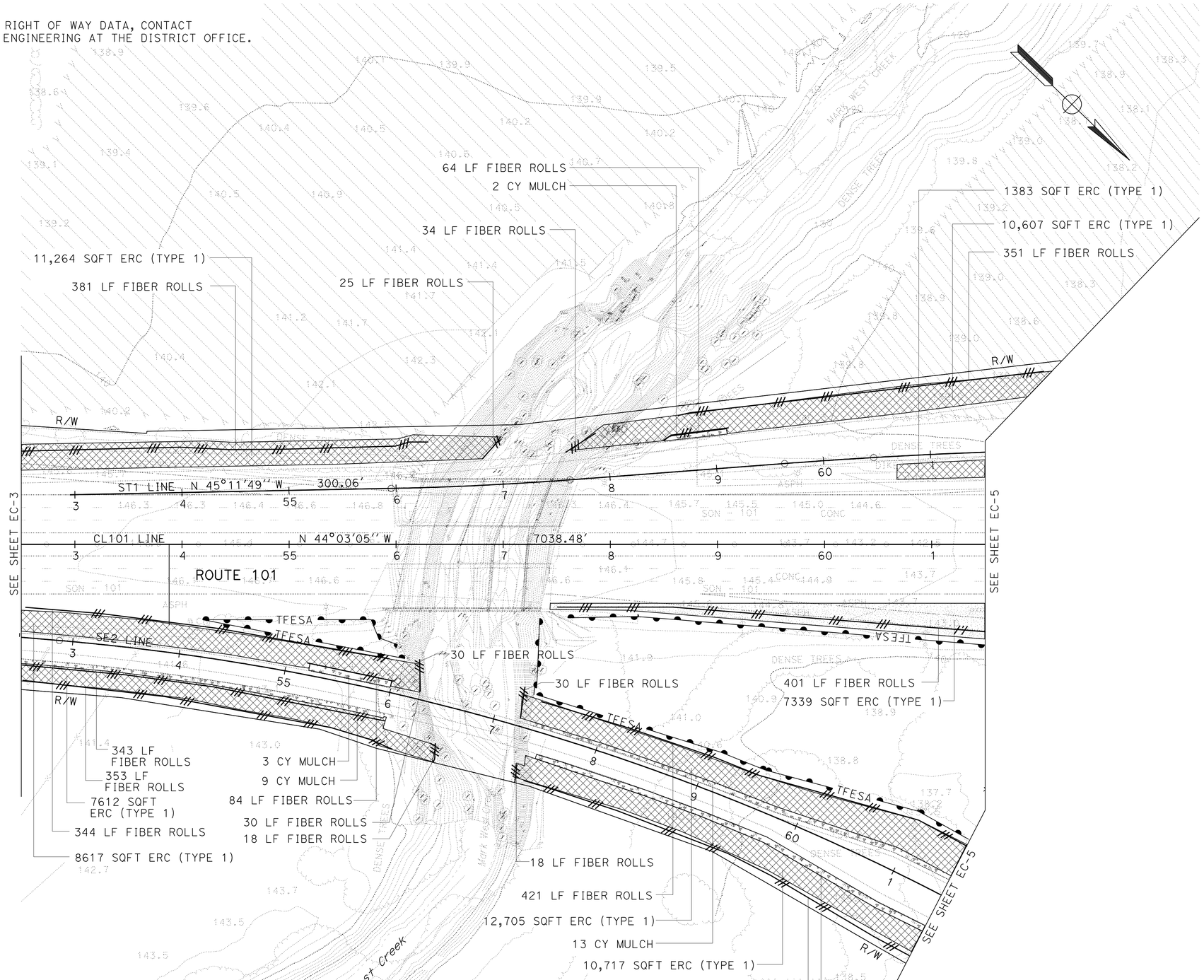


THIS PLAN ACCURATE FOR EROSION CONTROL WORK ONLY.

# EROSION CONTROL PLAN

SCALE: 1" = 50'

**EC-4**

| REVISED BY | DATE REVISED |
|---|---|
| | |

| CALCULATED-DESIGNED BY | CHECKED BY |
|---|---|
| JENNIFER EGAWA | ALEX MCDONALD |

SENIOR LANDSCAPE ARCHITECT
DAVID YAM

STATE OF CALIFORNIA - DEPARTMENT OF TRANSPORTATION
Caltrans
**WATER QUALITY**

LAST REVISION 07-07-11
DATE PLOTTED => 13-SEP-2012
TIME PLOTTED => 13:24

| Dist | COUNTY | ROUTE | POST MILES TOTAL PROJECT | SHEET No. | TOTAL SHEETS |
|---|---|---|---|---|---|
| 04 | Son | 101 | 25.6/29.2 | 79 | 615 |

LICENSED LANDSCAPE ARCHITECT

9-10-12
PLANS APPROVAL DATE

LICENSED LANDSCAPE ARCHITECT
JENNIFER EGAWA No. 5088
Signature
7-31-12
Renewal Date
8-4-11
Date
STATE OF CALIFORNIA

*THE STATE OF CALIFORNIA OR ITS OFFICERS OR AGENTS SHALL NOT BE RESPONSIBLE FOR THE ACCURACY OR COMPLETENESS OF SCANNED COPIES OF THIS PLAN SHEET.*

**NOTE:**

FOR ACCURATE RIGHT OF WAY DATA, CONTACT RIGHT OF WAY ENGINEERING AT THE DISTRICT OFFICE.

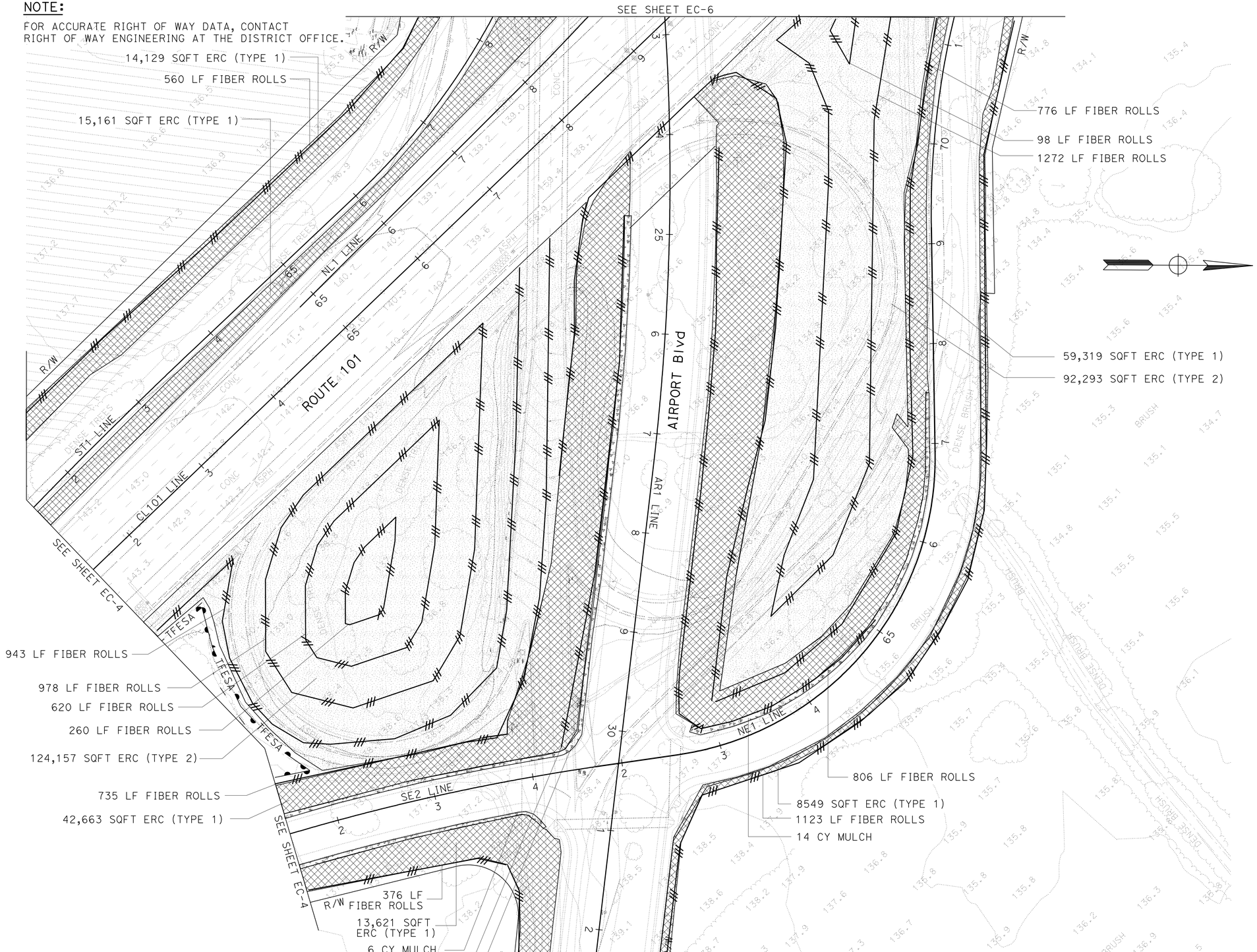


THIS PLAN ACCURATE FOR EROSION CONTROL WORK ONLY.

# EROSION CONTROL PLAN

SCALE: 1" = 50'

**EC-5**

STATE OF CALIFORNIA - DEPARTMENT OF TRANSPORTATION
Caltrans
WATER QUALITY

SENIOR LANDSCAPE ARCHITECT: DAVID YAM
CALCULATED-DESIGNED BY: JENNIFER EGAWA
CHECKED BY: ALEX MCDONALD
REVISED BY
DATE REVISED

LAST REVISION 07-07-11
DATE PLOTTED => 13-SEP-2012
TIME PLOTTED => 13:24

| Dist | COUNTY | ROUTE | POST MILES TOTAL PROJECT | SHEET No. | TOTAL SHEETS |
|---|---|---|---|---|---|
| 04 | Son | 101 | 25.6/29.2 | 80 | 615 |

LICENSED LANDSCAPE ARCHITECT

9-10-12
PLANS APPROVAL DATE

LICENSED LANDSCAPE ARCHITECT
JENNIFER EGAWA No. 5088
Signature
7-31-12
Renewal Date
8-4-11
Date
STATE OF CALIFORNIA

*THE STATE OF CALIFORNIA OR ITS OFFICERS OR AGENTS SHALL NOT BE RESPONSIBLE FOR THE ACCURACY OR COMPLETENESS OF SCANNED COPIES OF THIS PLAN SHEET.*

**NOTE:**

FOR ACCURATE RIGHT OF WAY DATA, CONTACT RIGHT OF WAY ENGINEERING AT THE DISTRICT OFFICE.

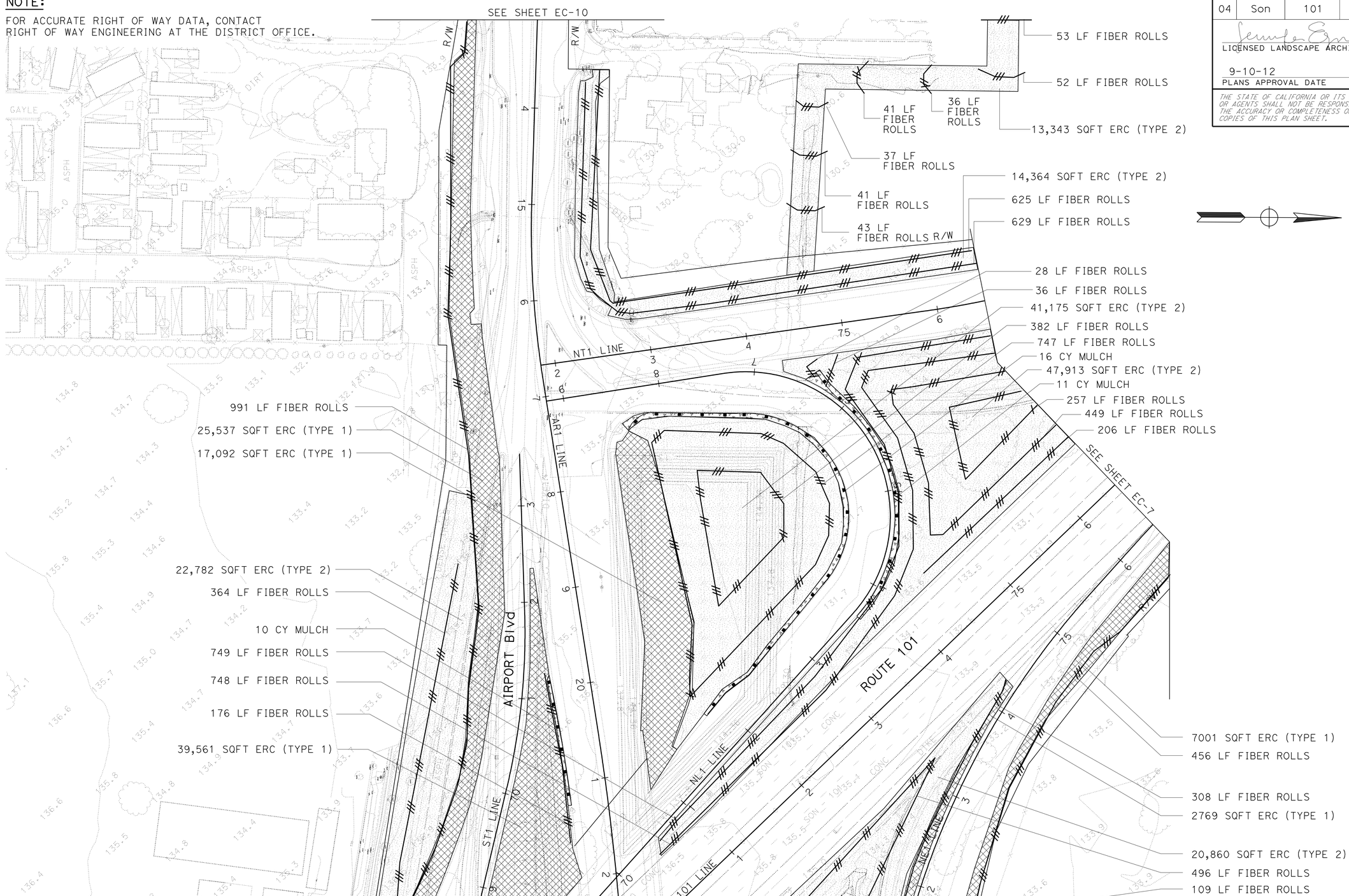


# EROSION CONTROL PLAN

SCALE: 1" = 50'

**EC-6**

THIS PLAN ACCURATE FOR EROSION CONTROL WORK ONLY.

STATE OF CALIFORNIA - DEPARTMENT OF TRANSPORTATION
Caltrans®
WATER QUALITY

SENIOR LANDSCAPE ARCHITECT: DAVID YAM

CALCULATED-DESIGNED BY: JENNIFER EGAWA
CHECKED BY: ALEX MCDONALD

REVISED BY
DATE REVISED

LAST REVISION 07-07-11
DATE PLOTTED => 13-SEP-2012
TIME PLOTTED => 13:24

| Dist | COUNTY | ROUTE | POST MILES TOTAL PROJECT | SHEET No. | TOTAL SHEETS |
|---|---|---|---|---|---|
| 04 | Son | 101 | 25.6/29.2 | 81 | 615 |

LICENSED LANDSCAPE ARCHITECT

9-10-12
PLANS APPROVAL DATE

LICENSED LANDSCAPE ARCHITECT
JENNIFER EGAWA No. 5088
Signature
7-31-12
Renewal Date
8-4-11
Date
STATE OF CALIFORNIA

*THE STATE OF CALIFORNIA OR ITS OFFICERS OR AGENTS SHALL NOT BE RESPONSIBLE FOR THE ACCURACY OR COMPLETENESS OF SCANNED COPIES OF THIS PLAN SHEET.*

**NOTE:**

FOR ACCURATE RIGHT OF WAY DATA, CONTACT RIGHT OF WAY ENGINEERING AT THE DISTRICT OFFICE.

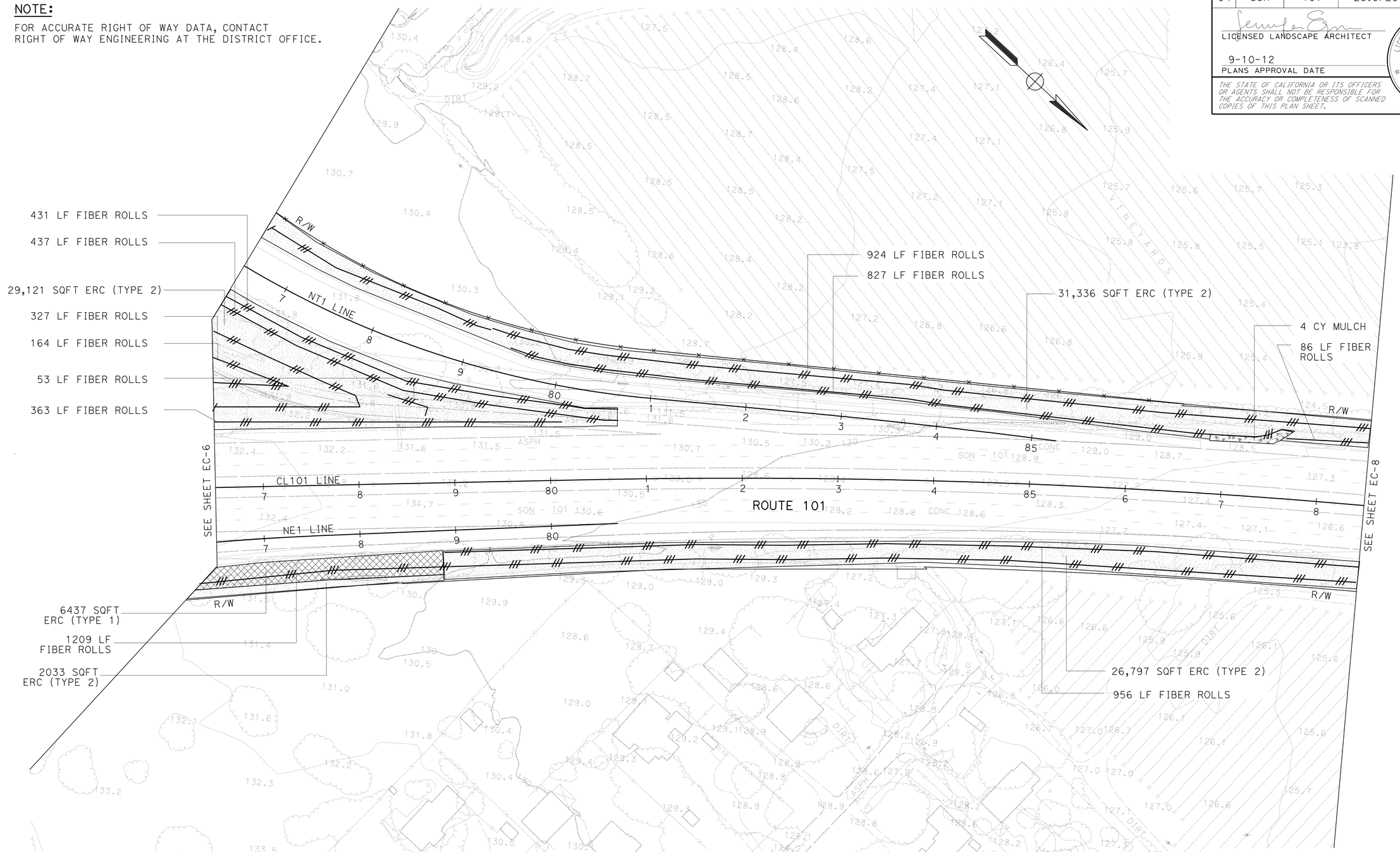


# EROSION CONTROL PLAN

SCALE: 1" = 50'

THIS PLAN ACCURATE FOR EROSION CONTROL WORK ONLY.

**EC-7**

| REVISED BY | DATE REVISED |
|---|---|
| | |

CALCULATED-DESIGNED BY: JENNIFER EGAWA
CHECKED BY: ALEX MCDONALD
SENIOR LANDSCAPE ARCHITECT: DAVID YAM

STATE OF CALIFORNIA - DEPARTMENT OF TRANSPORTATION
Caltrans®
WATER QUALITY

LAST REVISION 07-07-11
DATE PLOTTED => 13-SEP-2012
TIME PLOTTED => 13:25

| Dist | COUNTY | ROUTE | POST MILES TOTAL PROJECT | SHEET No. | TOTAL SHEETS |
|---|---|---|---|---|---|
| 04 | Son | 101 | 25.6/29.2 | 82 | 615 |

LICENSED LANDSCAPE ARCHITECT

9-10-12
PLANS APPROVAL DATE

LICENSED LANDSCAPE ARCHITECT
JENNIFER EGAWA No. 5088
Signature
7-31-12
Renewal Date
8-4-11
Date
STATE OF CALIFORNIA

*THE STATE OF CALIFORNIA OR ITS OFFICERS OR AGENTS SHALL NOT BE RESPONSIBLE FOR THE ACCURACY OR COMPLETENESS OF SCANNED COPIES OF THIS PLAN SHEET.*

**NOTE:**

FOR ACCURATE RIGHT OF WAY DATA, CONTACT RIGHT OF WAY ENGINEERING AT THE DISTRICT OFFICE.

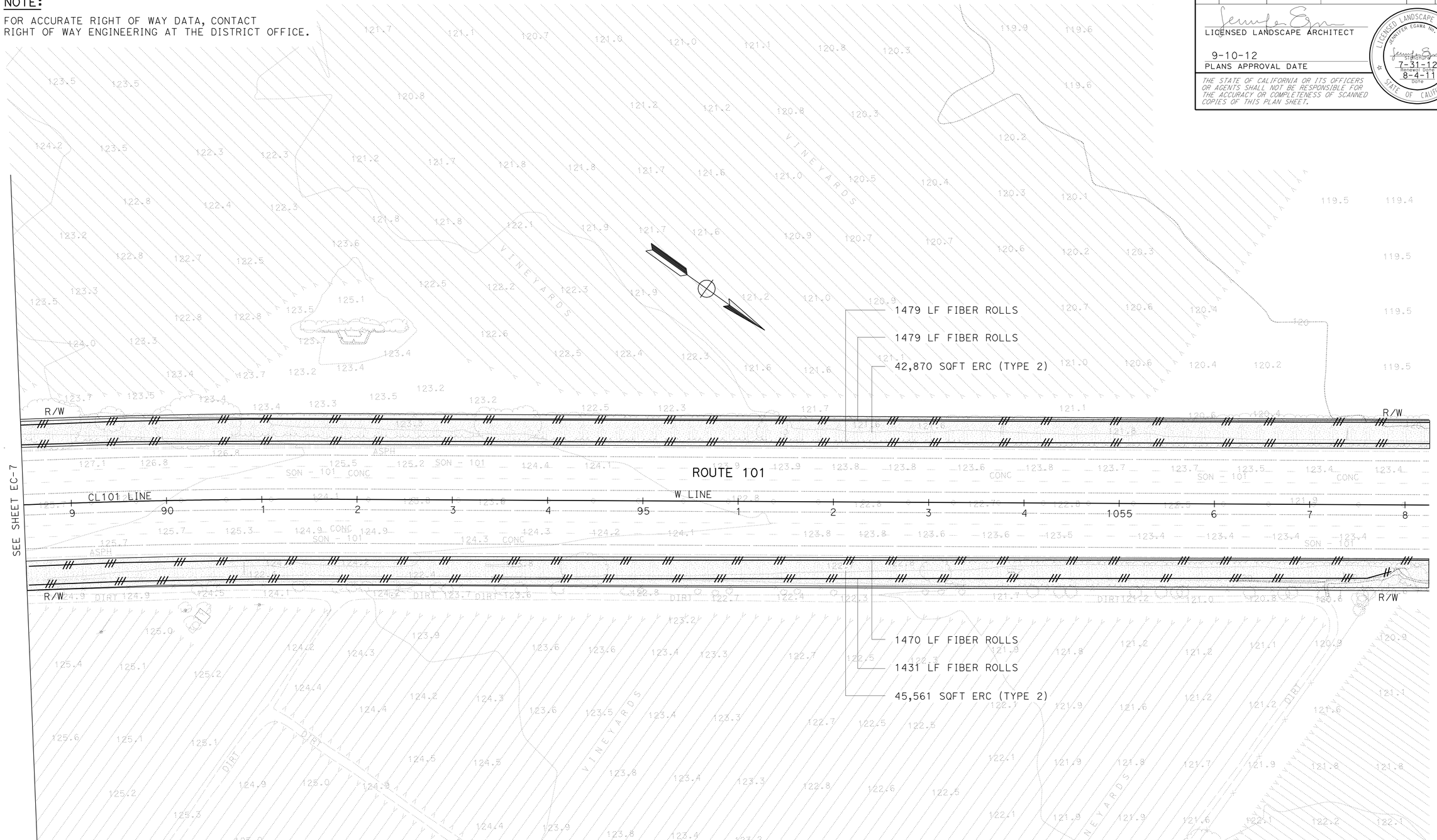


# EROSION CONTROL PLAN

SCALE: 1" = 50'

THIS PLAN ACCURATE FOR EROSION CONTROL WORK ONLY.

**EC-8**

STATE OF CALIFORNIA - DEPARTMENT OF TRANSPORTATION
Caltrans® **WATER QUALITY**

SENIOR LANDSCAPE ARCHITECT: DAVID YAM

CALCULATED-DESIGNED BY: JENNIFER EGAWA
CHECKED BY: ALEX MCDONALD

REVISED BY
DATE REVISED

LAST REVISION 07-07-11
DATE PLOTTED => 13-SEP-2012
TIME PLOTTED => 13:25

| Dist | COUNTY | ROUTE | POST MILES TOTAL PROJECT | SHEET No. | TOTAL SHEETS |
|---|---|---|---|---|---|
| 04 | Son | 101 | 25.6/29.2 | 83 | 615 |

LICENSED LANDSCAPE ARCHITECT

9-10-12
PLANS APPROVAL DATE

LICENSED LANDSCAPE ARCHITECT
JENNIFER EGAWA No. 5088
Signature
7-31-12
Renewal Date
8-4-11
Date
STATE OF CALIFORNIA

*THE STATE OF CALIFORNIA OR ITS OFFICERS OR AGENTS SHALL NOT BE RESPONSIBLE FOR THE ACCURACY OR COMPLETENESS OF SCANNED COPIES OF THIS PLAN SHEET.*

**NOTE:**

FOR ACCURATE RIGHT OF WAY DATA, CONTACT RIGHT OF WAY ENGINEERING AT THE DISTRICT OFFICE.

THIS PLAN ACCURATE FOR EROSION CONTROL WORK ONLY.

# EROSION CONTROL PLAN

SCALE: 1" = 50'

**EC-9**

STATE OF CALIFORNIA - DEPARTMENT OF TRANSPORTATION
Caltrans® **WATER QUALITY**

SENIOR LANDSCAPE ARCHITECT: DAVID YAM

CALCULATED-DESIGNED BY: JENNIFER EGAWA
CHECKED BY: ALEX MCDONALD

REVISED BY
DATE REVISED

LAST REVISION 07-07-11
DATE PLOTTED => 13-SEP-2012
TIME PLOTTED => 13:25

| Dist | COUNTY | ROUTE | POST MILES TOTAL PROJECT | SHEET No. | TOTAL SHEETS |
|---|---|---|---|---|---|
| 04 | Son | 101 | 25.6/29.2 | 84 | 615 |

LICENSED LANDSCAPE ARCHITECT

9-10-12
PLANS APPROVAL DATE

LICENSED LANDSCAPE ARCHITECT
JENNIFER EGAWA No. 5068
Signature
7-31-12
Renewal Date
8-4-11
Date
STATE OF CALIFORNIA

*THE STATE OF CALIFORNIA OR ITS OFFICERS OR AGENTS SHALL NOT BE RESPONSIBLE FOR THE ACCURACY OR COMPLETENESS OF SCANNED COPIES OF THIS PLAN SHEET.*

**NOTE:**

FOR ACCURATE RIGHT OF WAY DATA, CONTACT
RIGHT OF WAY ENGINEERING AT THE DISTRICT OFFICE.

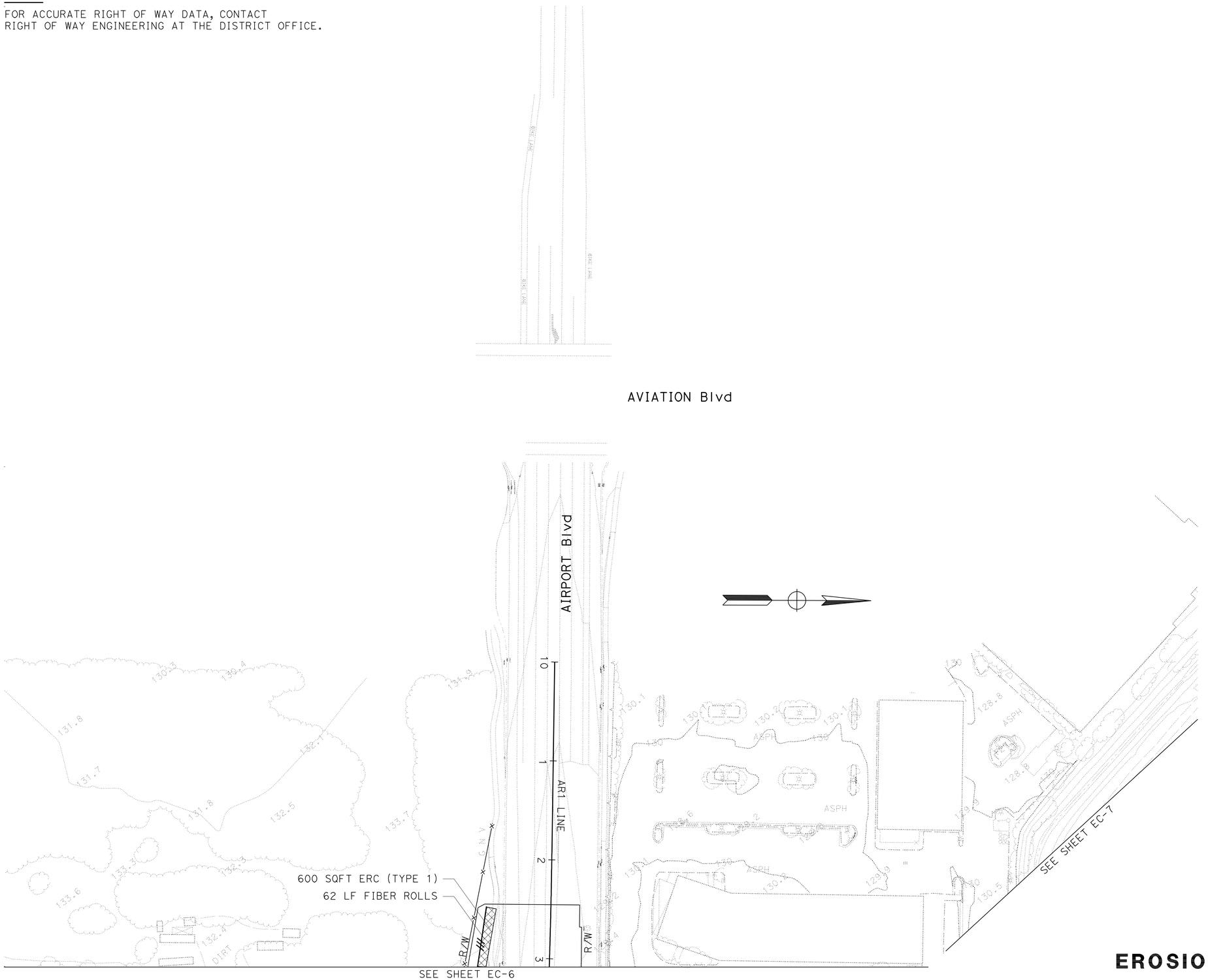


THIS PLAN ACCURATE FOR EROSION CONTROL WORK ONLY.

# EROSION CONTROL PLAN

SCALE: 1" = 50'

**EC-10**

STATE OF CALIFORNIA - DEPARTMENT OF TRANSPORTATION
Caltrans® **WATER QUALITY**

SENIOR LANDSCAPE ARCHITECT: DAVID YAM

CALCULATED-DESIGNED BY: JENNIFER EGAWA
CHECKED BY: ALEX MCDONALD

REVISED BY
DATE REVISED

LAST REVISION 07-07-11
DATE PLOTTED => 13-SEP-2012
TIME PLOTTED => 13:25

| Dist | COUNTY | ROUTE | POST MILES TOTAL PROJECT | SHEET No. | TOTAL SHEETS |
|---|---|---|---|---|---|
| 04 | Son | 101 | 25.6/29.2 | 85 | 615 |

LICENSED LANDSCAPE ARCHITECT

9-10-12
PLANS APPROVAL DATE

LICENSED LANDSCAPE ARCHITECT
JENNIFER EGAWA 1051-5066
Signature
7-31-12
Renewal Date
8-4-11
Date
STATE OF CALIFORNIA

*THE STATE OF CALIFORNIA OR ITS OFFICERS OR AGENTS SHALL NOT BE RESPONSIBLE FOR THE ACCURACY OR COMPLETENESS OF SCANNED COPIES OF THIS PLAN SHEET.*

**NOTE:**

FOR ACCURATE RIGHT OF WAY DATA, CONTACT RIGHT OF WAY ENGINEERING AT THE DISTRICT OFFICE.

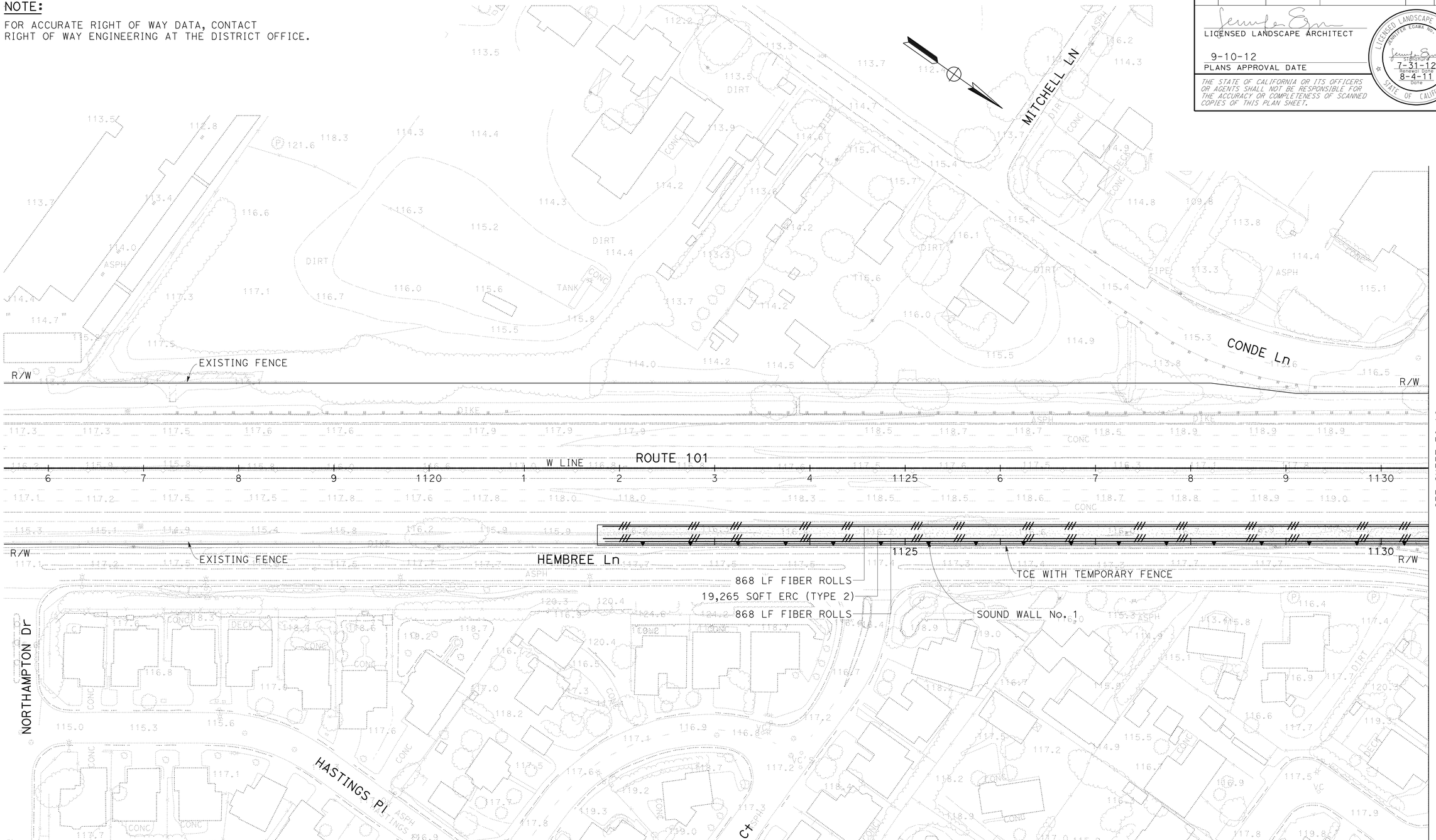


# EROSION CONTROL PLAN

SCALE: 1" = 50'

THIS PLAN ACCURATE FOR EROSION CONTROL WORK ONLY.

**EC-11**

| REVISED BY | DATE REVISED |
|---|---|
| JENNIFER EGAWA | |
| ALEX MCDONALD | |
| CALCULATED-DESIGNED BY | |
| CHECKED BY | |
| SENIOR LANDSCAPE ARCHITECT | |
| DAVID YAM | |

STATE OF CALIFORNIA - DEPARTMENT OF TRANSPORTATION
Caltrans
WATER QUALITY

LAST REVISION 07-07-11
DATE PLOTTED => 13-SEP-2012
TIME PLOTTED => 13:25

| Dist | COUNTY | ROUTE | POST MILES TOTAL PROJECT | SHEET No. | TOTAL SHEETS |
|---|---|---|---|---|---|
| 04 | Son | 101 | 25.6/29.2 | 86 | 615 |

LICENSED LANDSCAPE ARCHITECT

9-10-12
PLANS APPROVAL DATE

LICENSED LANDSCAPE ARCHITECT
JENNIFER EGAWA No. 5055
Signature 7-31-12
Renewal Date 8-4-11
Date
STATE OF CALIFORNIA

*THE STATE OF CALIFORNIA OR ITS OFFICERS OR AGENTS SHALL NOT BE RESPONSIBLE FOR THE ACCURACY OR COMPLETENESS OF SCANNED COPIES OF THIS PLAN SHEET.*

FOR ACCURATE RIGHT OF WAY AND ACCESS DATA, CONTACT RIGHT OF WAY ENGINEERING AT THE DISTRICT OFFICE.

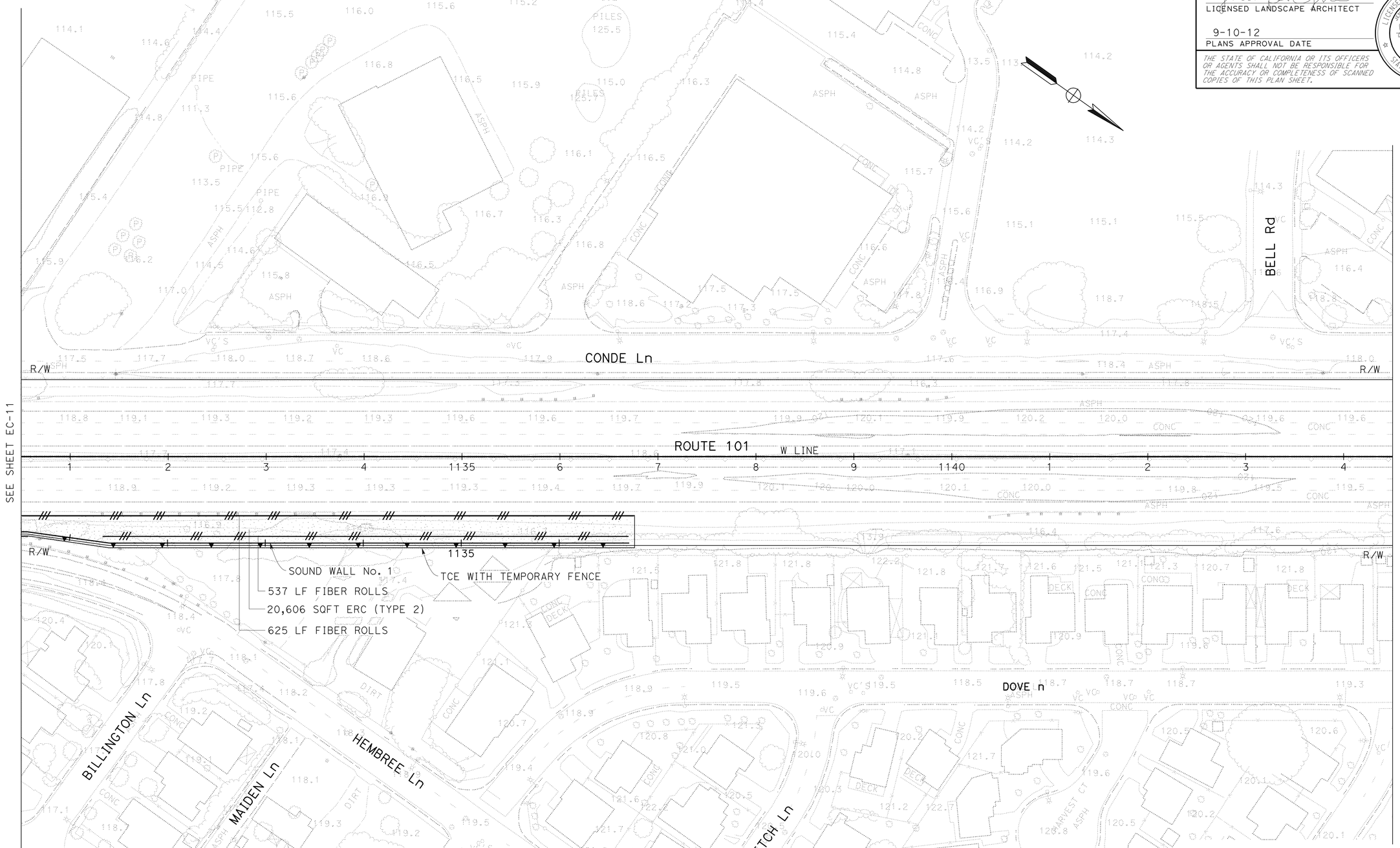


# EROSION CONTROL PLAN

SCALE: 1" = 50'

THIS PLAN ACCURATE FOR EROSION CONTROL WORK ONLY.

**EC-12**

| | |
|---|---|
| LAST REVISION | 07-07-11 |
| DATE PLOTTED => | 13-SEP-2012 |
| TIME PLOTTED => | 13:26 |

STATE OF CALIFORNIA - DEPARTMENT OF TRANSPORTATION
Caltrans®
WATER QUALITY
SENIOR LANDSCAPE ARCHITECT: DAVID YAM
CALCULATED-DESIGNED BY: JENNIFER EGAWA
CHECKED BY: ALEX MCDONALD
REVISED BY
DATE REVISED

| Dist | COUNTY | ROUTE | POST MILES TOTAL PROJECT | SHEET No. | TOTAL SHEETS |
|---|---|---|---|---|---|
| 04 | Son | 101 | 25.6/29.2 | 87 | 615 |

LICENSED LANDSCAPE ARCHITECT

9-10-12
PLANS APPROVAL DATE

LICENSED LANDSCAPE ARCHITECT
JENNIFER EGAWA No. 5055
Signature
7-31-12
Renewal Date
8-4-11
Date
STATE OF CALIFORNIA

*THE STATE OF CALIFORNIA OR ITS OFFICERS OR AGENTS SHALL NOT BE RESPONSIBLE FOR THE ACCURACY OR COMPLETENESS OF SCANNED COPIES OF THIS PLAN SHEET.*

FOR ACCURATE RIGHT OF WAY AND ACCESS DATA, CONTACT RIGHT OF WAY ENGINEERING AT THE DISTRICT OFFICE.

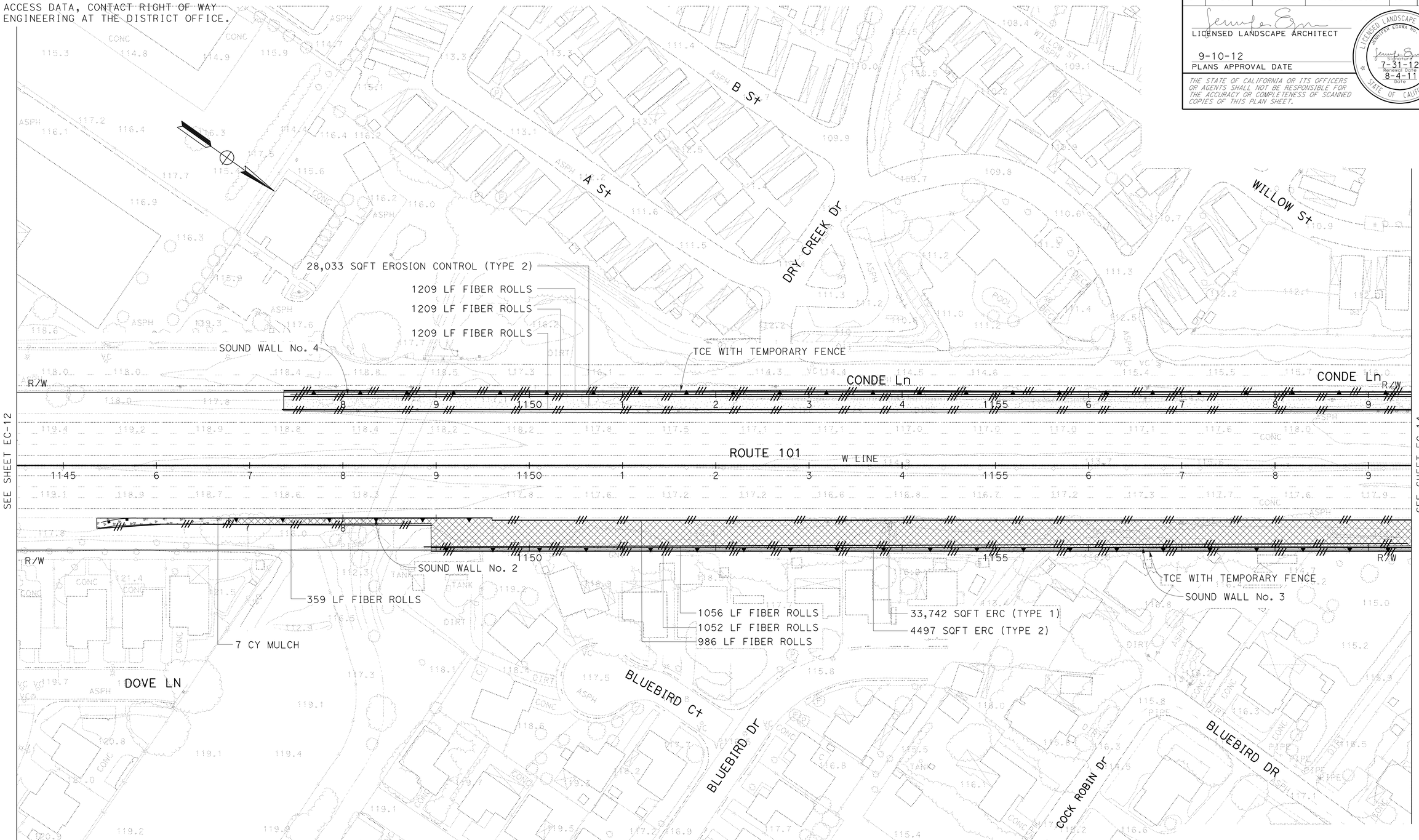


# EROSION CONTROL PLAN

SCALE: 1" = 50'

THIS PLAN ACCURATE FOR EROSION CONTROL WORK ONLY.

**EC-13**

STATE OF CALIFORNIA - DEPARTMENT OF TRANSPORTATION
Caltrans® WATER QUALITY

SENIOR LANDSCAPE ARCHITECT: DAVID YAM

CALCULATED-DESIGNED BY: JENNIFER EGAWA
CHECKED BY: ALEX MCDONALD

REVISED BY
DATE REVISED

LAST REVISION 07-07-11
DATE PLOTTED => 13-SEP-2012
TIME PLOTTED => 13:26

| Dist | COUNTY | ROUTE | POST MILES TOTAL PROJECT | SHEET No. | TOTAL SHEETS |
|---|---|---|---|---|---|
| 04 | Son | 101 | 25.6/29.2 | 88 | 615 |

LICENSED LANDSCAPE ARCHITECT

9-10-12
PLANS APPROVAL DATE

LICENSED LANDSCAPE ARCHITECT
JENNIFER EGAWA No. 5088
Signature
7-31-12
Renewal Date
8-4-11
Date
STATE OF CALIFORNIA

*THE STATE OF CALIFORNIA OR ITS OFFICERS OR AGENTS SHALL NOT BE RESPONSIBLE FOR THE ACCURACY OR COMPLETENESS OF SCANNED COPIES OF THIS PLAN SHEET.*

FOR ACCURATE RIGHT OF WAY AND ACCESS DATA, CONTACT RIGHT OF WAY ENGINEERING AT THE DISTRICT OFFICE.

# EROSION CONTROL PLAN

SCALE: 1" = 50'

THIS PLAN ACCURATE FOR EROSION CONTROL WORK ONLY.

**EC-14**

STATE OF CALIFORNIA - DEPARTMENT OF TRANSPORTATION
Caltrans® **WATER QUALITY**

SENIOR LANDSCAPE ARCHITECT: DAVID YAM

CALCULATED-DESIGNED BY: JENNIFER EGAWA
CHECKED BY: ALEX MCDONALD

REVISED BY / DATE REVISED

LAST REVISION 07-07-11
DATE PLOTTED => 13-SEP-2012
TIME PLOTTED => 13:26

| Dist | COUNTY | ROUTE | POST MILES TOTAL PROJECT | SHEET No. | TOTAL SHEETS |
|---|---|---|---|---|---|
| 04 | Son | 101 | 25.6/29.2 | 89 | 615 |

LICENSED LANDSCAPE ARCHITECT

9-10-12
PLANS APPROVAL DATE

LICENSED LANDSCAPE ARCHITECT
Laurie J. Smith No. 4084
Signature
8-31-14
Renewal Date
7-13-12
Date
STATE OF CALIFORNIA

*THE STATE OF CALIFORNIA OR ITS OFFICERS OR AGENTS SHALL NOT BE RESPONSIBLE FOR THE ACCURACY OR COMPLETENESS OF SCANNED COPIES OF THIS PLAN SHEET.*

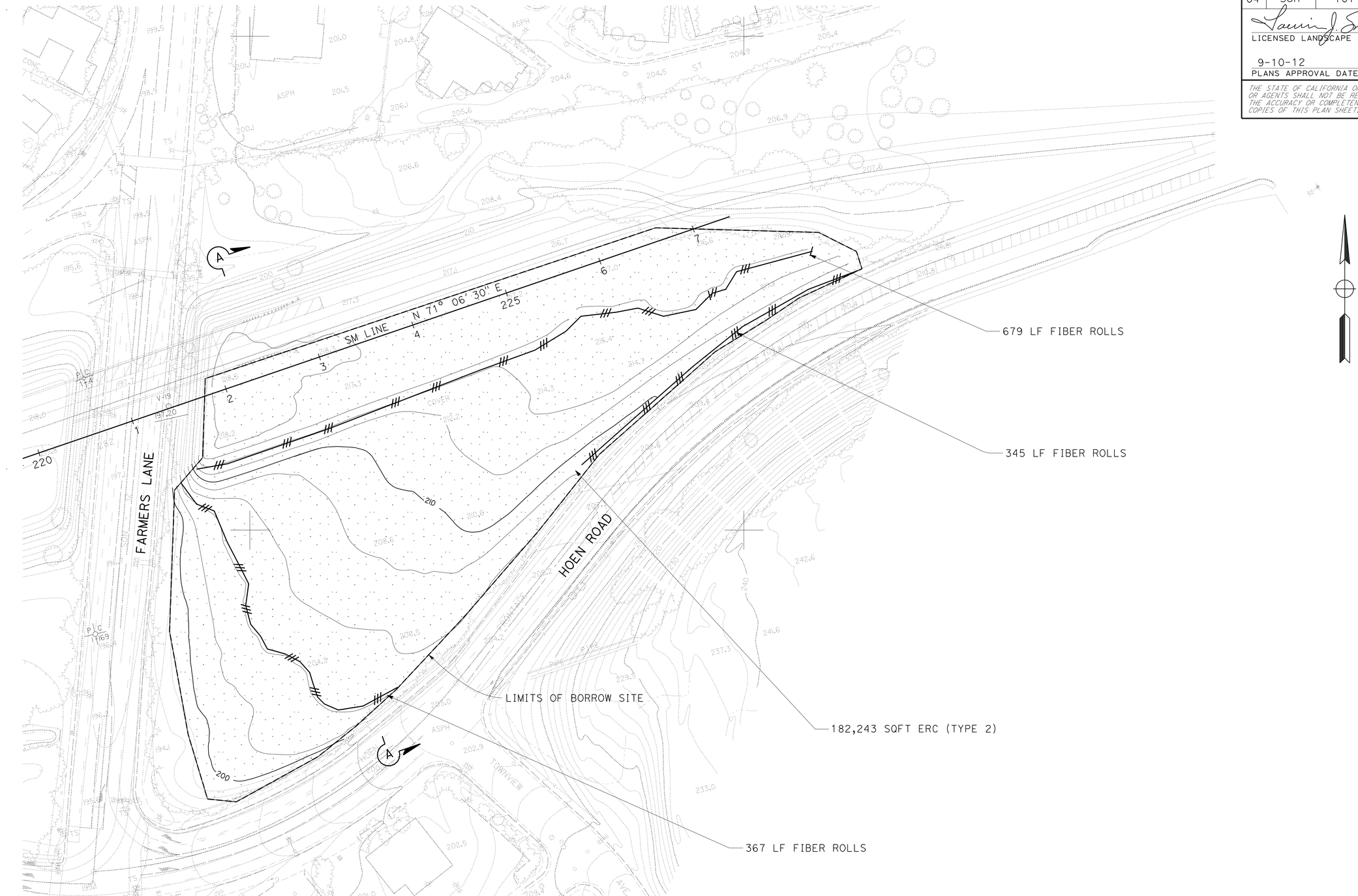


# EROSION CONTROL PLAN

SCALE: 1" = 50'

**EC-15**

STATE OF CALIFORNIA - DEPARTMENT OF TRANSPORTATION
Caltrans
WATER QUALITY

SENIOR LANDSCAPE ARCHITECT: DAVID YAM

CALCULATED-DESIGNED BY: LAURIE J. SMITH
CHECKED BY: ALEX MC DONALD

REVISED BY
DATE REVISED

LAST REVISION 07-13-12
DATE PLOTTED => 13-SEP-2012
TIME PLOTTED => 13:26

| Dist | COUNTY | ROUTE | POST MILES TOTAL PROJECT | SHEET No. | TOTAL SHEETS |
|---|---|---|---|---|---|
| 04 | Son | 101 | 25.6/29.2 | 90 | 615 |

LICENSED LANDSCAPE ARCHITECT

9-10-12
PLANS APPROVAL DATE

LICENSED LANDSCAPE ARCHITECT
JENNIFER EGAWA No. 5068
Signature
7-31-12
Renewal date
8-4-11
Date
STATE OF CALIFORNIA

THE STATE OF CALIFORNIA OR ITS OFFICERS OR AGENTS SHALL NOT BE RESPONSIBLE FOR THE ACCURACY OR COMPLETENESS OF SCANNED COPIES OF THIS PLAN SHEET.

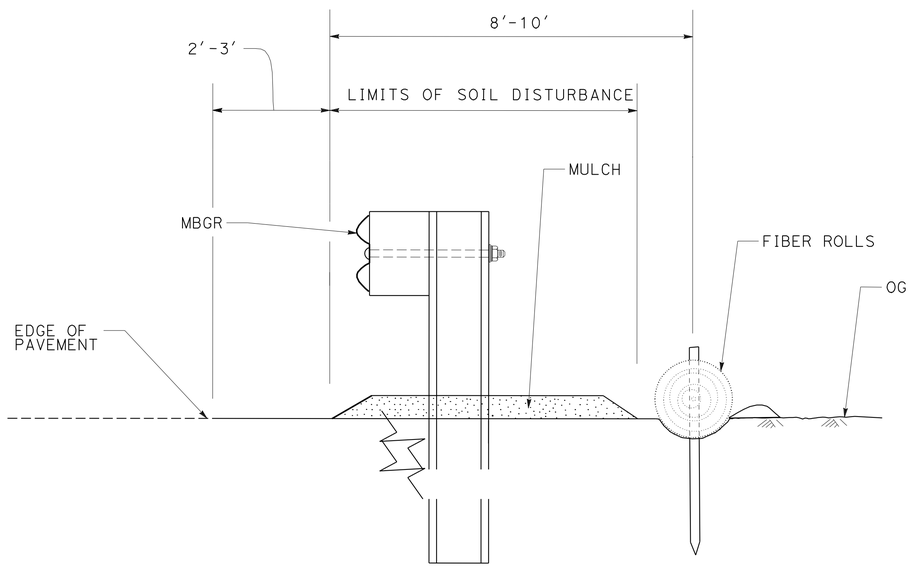


SECTION A-A

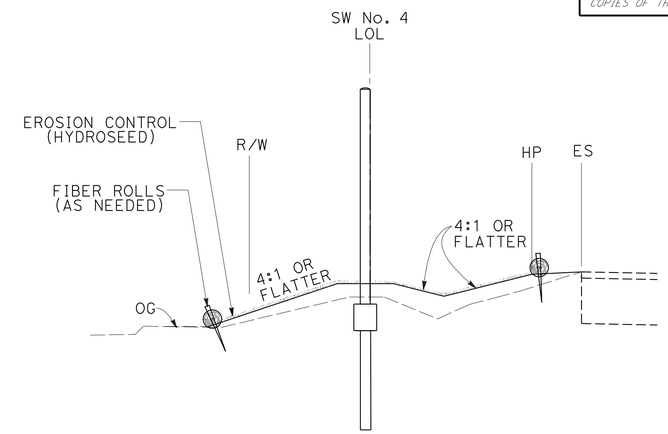


**SOUND WALL No. 4**
**TYPICAL SECTION**

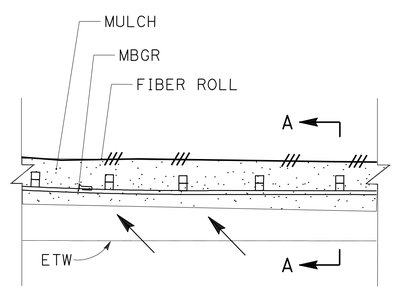


PLAN

**MULCH APPLICATION UNDER METAL BEAM GUARD RAIL**

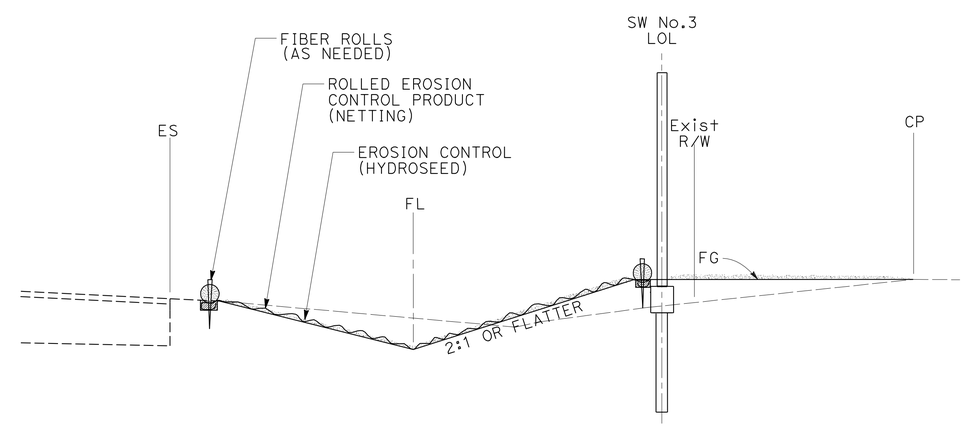


**SOUND WALL No. 3**

**FIBER ROLL AND ROLLED EROSION CONTROL PRODUCT (NETTING) PLACEMENT ON SLOPE**

THIS PLAN ACCURATE FOR EROSION CONTROL WORK ONLY.

# EROSION CONTROL DETAILS

NO SCALE

**ECD-1**

STATE OF CALIFORNIA - DEPARTMENT OF TRANSPORTATION
Caltrans®
WATER QUALITY

SENIOR LANDSCAPE ARCHITECT: DAVID YAM
CALCULATED-DESIGNED BY: JENNIFER EGAWA
CHECKED BY: ALEX MCDONALD
REVISED BY
DATE REVISED

LAST REVISION 07-07-11
DATE PLOTTED => 13-SEP-2012
TIME PLOTTED => 13:26

| Dist | COUNTY | ROUTE | POST MILES TOTAL PROJECT | SHEET No. | TOTAL SHEETS |
|---|---|---|---|---|---|
| 04 | Son | 101 | 25.6/29.2 | 91 | 615 |

LICENSED LANDSCAPE ARCHITECT

9-10-12
PLANS APPROVAL DATE

LICENSED LANDSCAPE ARCHITECT
JENNIFER EGAWA No. 5088
Signature
7-31-12
Renewal Date
8-4-11
Date
STATE OF CALIFORNIA

*THE STATE OF CALIFORNIA OR ITS OFFICERS OR AGENTS SHALL NOT BE RESPONSIBLE FOR THE ACCURACY OR COMPLETENESS OF SCANNED COPIES OF THIS PLAN SHEET.*

# EROSION CONTROL QUANTITIES

| SHEET NUMBER | EROSION CONTROL (HYDROSEED) | FIBER ROLLS | ROLLED EROSION CONTROL PRODUCT (NETTING) | MULCH | EROSION CONTROL (COMPOST BLANKET) | COMPOST (INCORPORATE) |
|---|---|---|---|---|---|---|
| | ACRE | LF | SQFT | CY | CY | SQYD |
| EC-1 | 1.4 | 3794 | | | 95 | |
| EC-2 | 4.0 | 8138 | | | 269 | 545 |
| EC-3 | 5.7 | 6348 | 30,009 | 12.5 | 383 | 160 |
| EC-4 | 1.6 | 3043 | 62,905 | 40 | 108 | |
| EC-5 | 8.5 | 9084 | 153,442 | 43 | 571 | |
| EC-6 | 5.4 | 8059 | 91,960 | 37 | 363 | |
| EC-7 | 2.2 | 5777 | 6437 | 4 | 148 | |
| EC-8 | 2.0 | 5859 | | | 136 | |
| EC-9 | 0.3 | 652 | 10,751 | | 17 | |
| EC-10 | 0.01 | 62 | 600 | | 1 | |
| EC-11 | 0.4 | 1736 | | | 30 | |
| EC-12 | 0.5 | 1162 | | | 32 | |
| EC-13 | 1.4 | 7080 | 33,742 | 7 | 102 | |
| EC-14 | 1.3 | 3775 | 33,536 | | 87 | |
| | | | | | | |
| TOTAL | 34.71 | 64,569 | 423,382 | 143.5 | 2342 | 705 |

REVISED BY | DATE REVISED

JENNIFER EGAWA | ALEX MCDONALD

CALCULATED-DESIGNED BY | CHECKED BY

SENIOR LANDSCAPE ARCHITECT: DAVID W. YAM

STATE OF CALIFORNIA - DEPARTMENT OF TRANSPORTATION
Caltrans® WATER QUALITY

## EROSION CONTROL QUANTITIES
## ECQ-1

LAST REVISION 07-07-11 | DATE PLOTTED => 13-SEP-2012 | TIME PLOTTED => 13:27

| Dist | COUNTY | ROUTE | POST MILES TOTAL PROJECT | SHEET No. | TOTAL SHEETS |
|---|---|---|---|---|---|
| 04 | Son | 101 | 25.6/29.2 | 92 | 615 |

REGISTERED CIVIL ENGINEER 8/3/11 DATE

9-10-12
PLANS APPROVAL DATE

REGISTERED PROFESSIONAL ENGINEER Fred J. Witteborn No. 56272 Exp. 12-31-12 CIVIL STATE OF CALIFORNIA

*THE STATE OF CALIFORNIA OR ITS OFFICERS OR AGENTS SHALL NOT BE RESPONSIBLE FOR THE ACCURACY OR COMPLETENESS OF SCANNED COPIES OF THIS PLAN SHEET.*

**NOTE:**

FOR ACCURATE RIGHT OF WAY DATA, CONTACT RIGHT OF WAY ENGINEERING AT THE DISTRICT OFFICE.

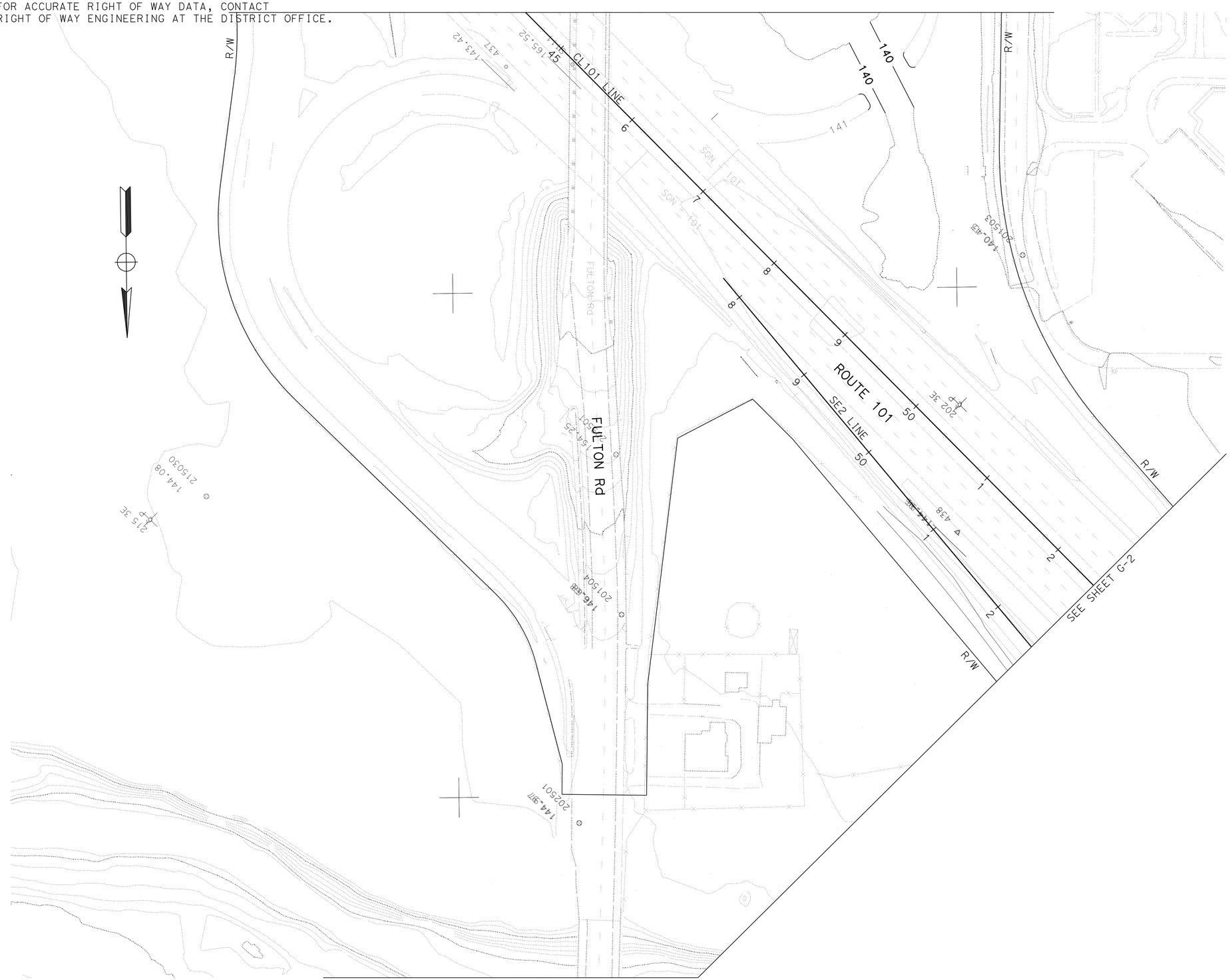


# CONTOUR GRADING

SCALE: 1" = 50'

THIS PLAN ACCURATE FOR CONTOUR GRADING WORK ONLY

**G-1**

STATE OF CALIFORNIA - DEPARTMENT OF TRANSPORTATION
Caltrans
DESIGN

FUNCTIONAL SUPERVISOR: JONATHAN LEE

CALCULATED-DESIGNED BY: ABEER AQRABAWI
CHECKED BY: JONATHAN LEE

REVISED BY: A
DATE REVISED: A

LAST REVISION 01-05-11
DATE PLOTTED => 13-SEP-2012
TIME PLOTTED => 14:21

| Dist | COUNTY | ROUTE | POST MILES TOTAL PROJECT | SHEET No. | TOTAL SHEETS |
|---|---|---|---|---|---|
| 04 | Son | 101 | 25.6/29.2 | 93 | 615 |

REGISTERED CIVIL ENGINEER 8/3/11 DATE

9-10-12
PLANS APPROVAL DATE

REGISTERED PROFESSIONAL ENGINEER Fred J. Witteborn No. 56272 Exp. 12-31-12 CIVIL STATE OF CALIFORNIA

*THE STATE OF CALIFORNIA OR ITS OFFICERS OR AGENTS SHALL NOT BE RESPONSIBLE FOR THE ACCURACY OR COMPLETENESS OF SCANNED COPIES OF THIS PLAN SHEET.*

NOTE:

FOR ACCURATE RIGHT OF WAY DATA, CONTACT RIGHT OF WAY ENGINEERING AT THE DISTRICT OFFICE.

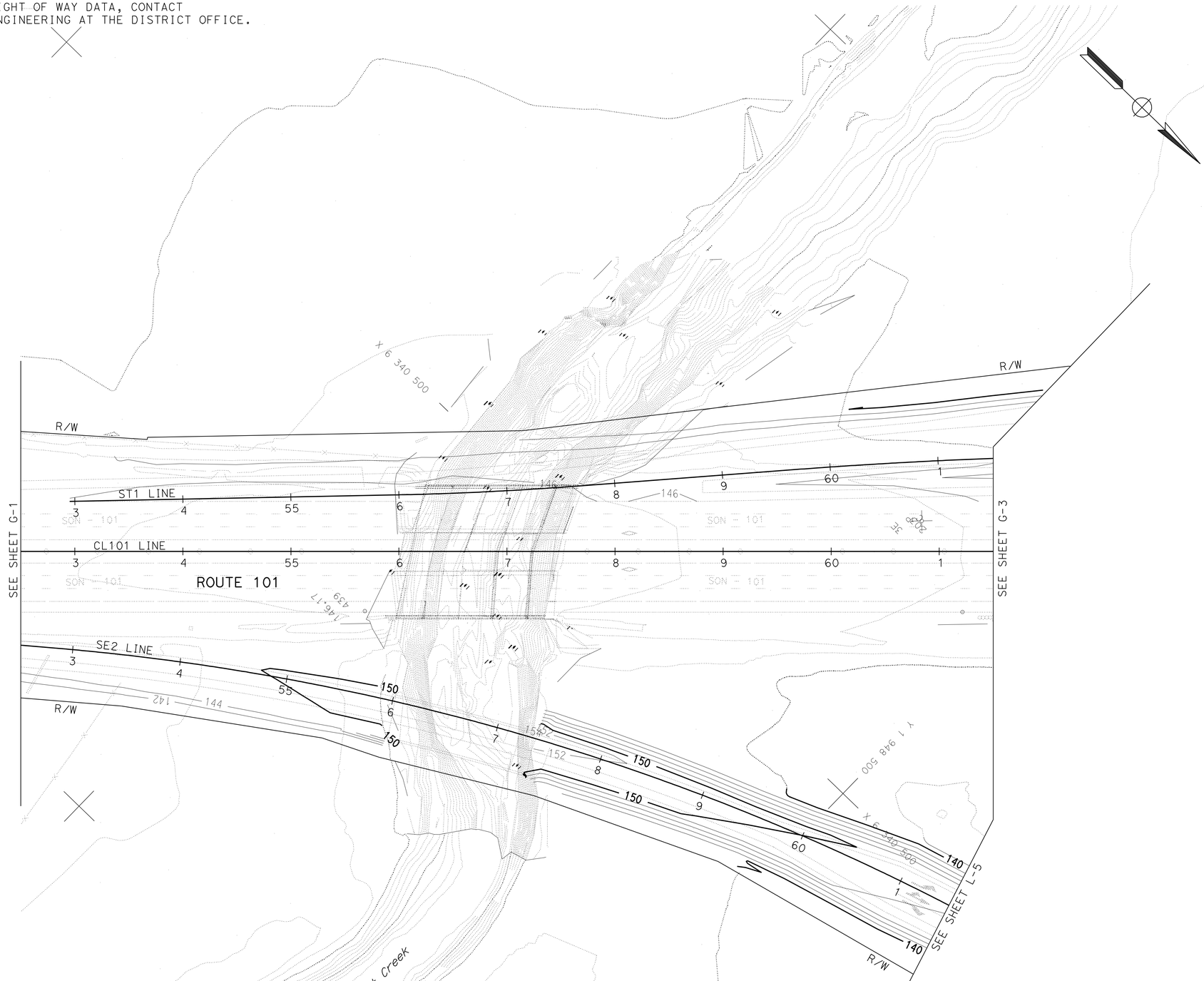


FOR NOTES, ABBREVIATIONS AND LEGEND, SEE SHEET G-1

THIS PLAN ACCURATE FOR CONTOUR GRADING WORK ONLY

# CONTOUR GRADING

SCALE: 1" = 50'

G-2

STATE OF CALIFORNIA - DEPARTMENT OF TRANSPORTATION

Caltrans

DESIGN

FUNCTIONAL SUPERVISOR: JONATHAN LEE

CALCULATED-DESIGNED BY: ABEER AQRABAWI

CHECKED BY: JONATHAN LEE

REVISED BY: A

DATE REVISED: A

LAST REVISION: 03-29-11

DATE PLOTTED => 13-SEP-2012

TIME PLOTTED => 14:21

| Dist | COUNTY | ROUTE | POST MILES TOTAL PROJECT | SHEET No. | TOTAL SHEETS |
|---|---|---|---|---|---|
| 04 | Son | 101 | 25.6/29.2 | 94 | 615 |

REGISTERED CIVIL ENGINEER 8/3/11 DATE

9-10-12
PLANS APPROVAL DATE

REGISTERED PROFESSIONAL ENGINEER Fred J. Witteborn No. 56272 Exp. 12-31-12 CIVIL STATE OF CALIFORNIA

*THE STATE OF CALIFORNIA OR ITS OFFICERS OR AGENTS SHALL NOT BE RESPONSIBLE FOR THE ACCURACY OR COMPLETENESS OF SCANNED COPIES OF THIS PLAN SHEET.*

**NOTE:**

FOR ACCURATE RIGHT OF WAY DATA, CONTACT RIGHT OF WAY ENGINEERING AT THE DISTRICT OFFICE.

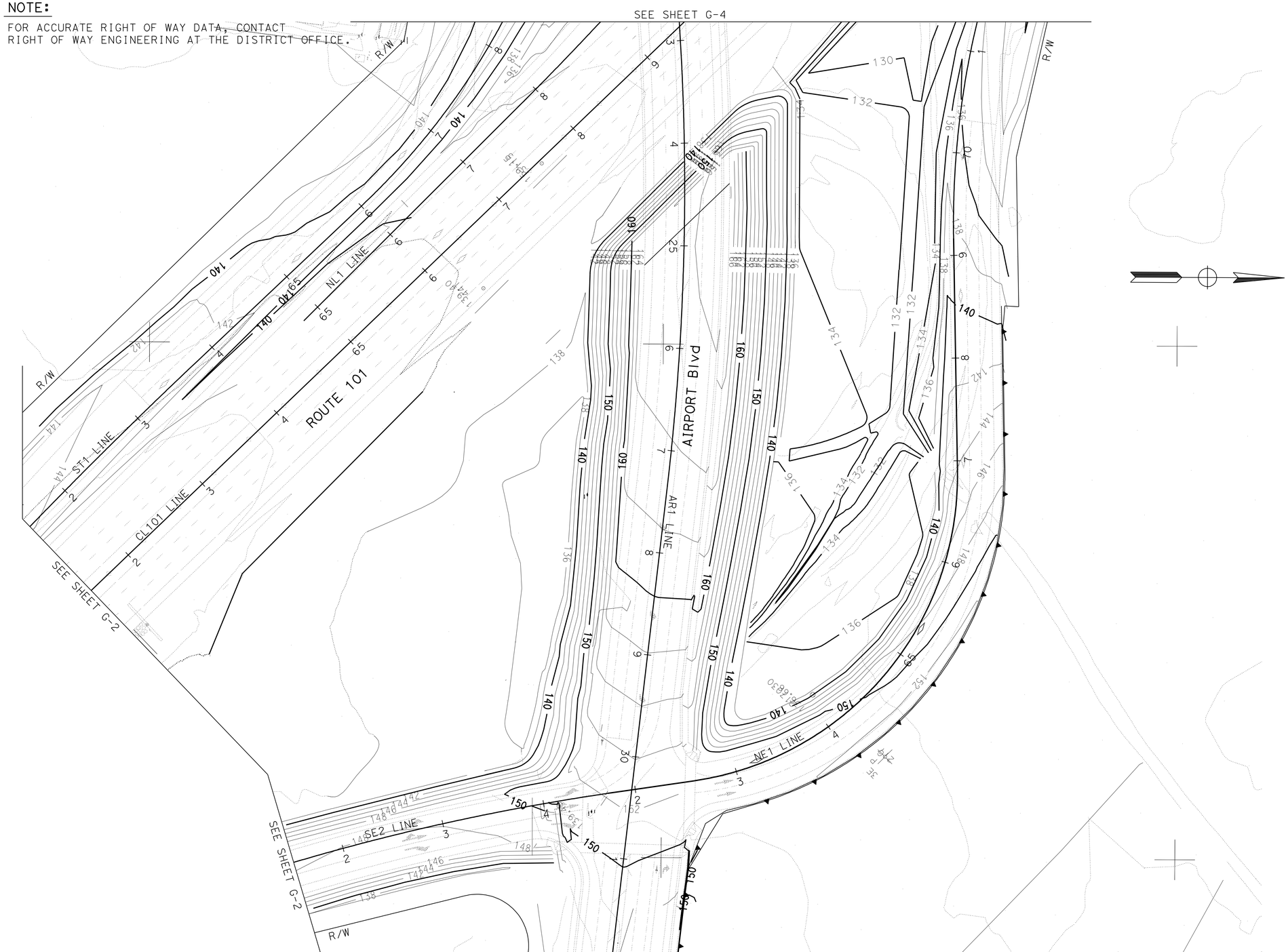


FOR NOTES, ABBREVIATIONS AND LEGEND, SEE SHEET G-1

THIS PLAN ACCURATE FOR CONTOUR GRADING WORK ONLY

# CONTOUR GRADING

SCALE: 1" = 50'

**G-3**

STATE OF CALIFORNIA - DEPARTMENT OF TRANSPORTATION

Caltrans

DESIGN

FUNCTIONAL SUPERVISOR: JONATHAN LEE

CALCULATED-DESIGNED BY: ABEER AQRABAWI

CHECKED BY: JONATHAN LEE

REVISED BY: A

DATE REVISED: A

LAST REVISION: 03-21-11

DATE PLOTTED => 13-SEP-2012

TIME PLOTTED => 14:21

| Dist | COUNTY | ROUTE | POST MILES TOTAL PROJECT | SHEET No. | TOTAL SHEETS |
|---|---|---|---|---|---|
| 04 | Son | 101 | 25.6/29.2 | 95 | 615 |

REGISTERED CIVIL ENGINEER 8/3/11 DATE

9-10-12
PLANS APPROVAL DATE

REGISTERED PROFESSIONAL ENGINEER Fred J. Witteborn No. 56272 Exp. 12-31-12 CIVIL STATE OF CALIFORNIA

*THE STATE OF CALIFORNIA OR ITS OFFICERS OR AGENTS SHALL NOT BE RESPONSIBLE FOR THE ACCURACY OR COMPLETENESS OF SCANNED COPIES OF THIS PLAN SHEET.*

NOTE:

FOR ACCURATE RIGHT OF WAY DATA, CONTACT RIGHT OF WAY ENGINEERING AT THE DISTRICT OFFICE.

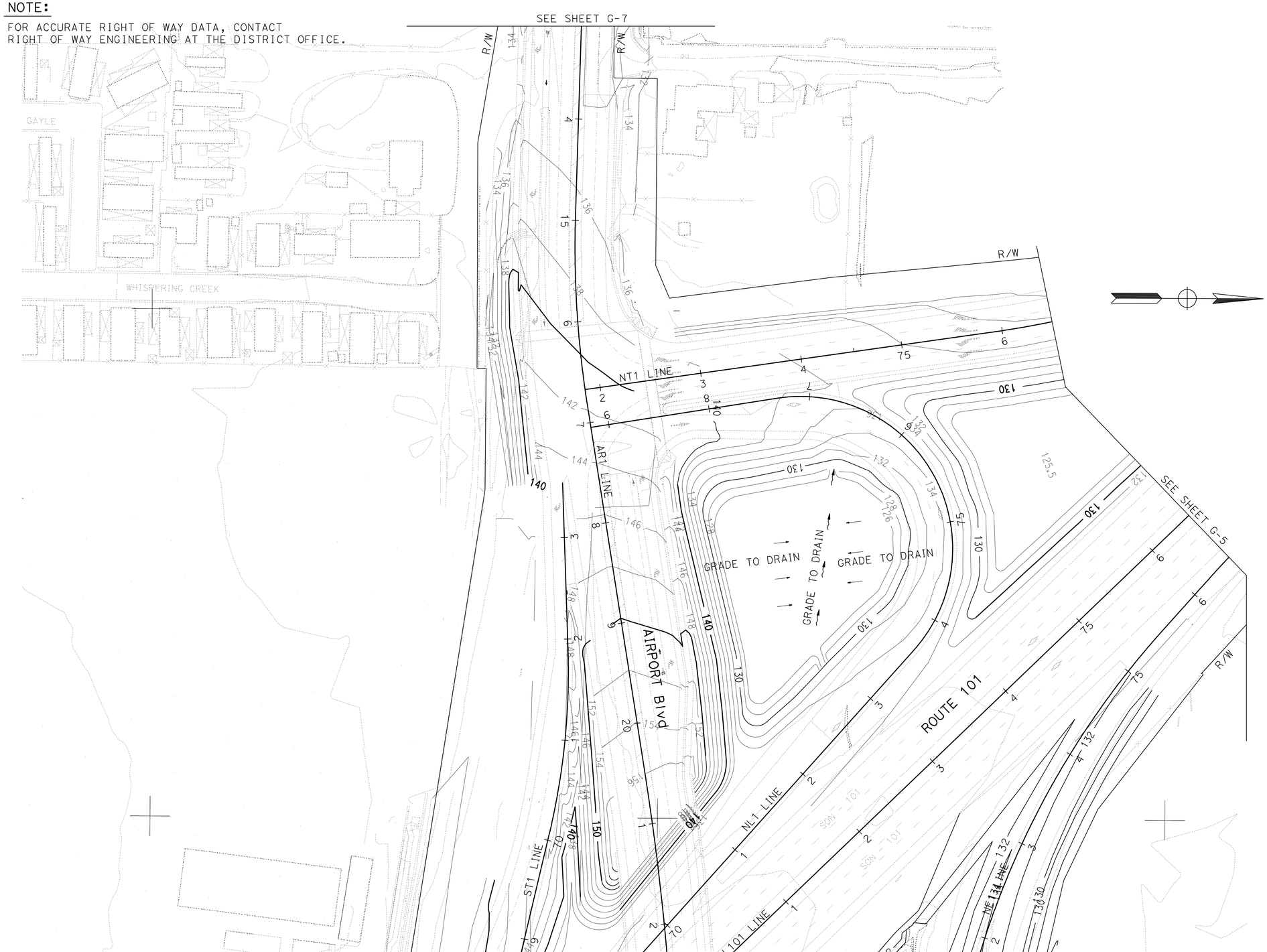


FOR NOTES, ABBREVIATIONS AND LEGEND, SEE SHEET G-1

THIS PLAN ACCURATE FOR CONTOUR GRADING WORK ONLY

# CONTOUR GRADING

SCALE: 1" = 50'

G-4

STATE OF CALIFORNIA - DEPARTMENT OF TRANSPORTATION

Caltrans

DESIGN

FUNCTIONAL SUPERVISOR: JONATHAN LEE

CALCULATED-DESIGNED BY: ABBEER AQRABAWI

CHECKED BY: JONATHAN LEE

REVISED BY: A

DATE REVISED: A

LAST REVISION: 06-20-11

DATE PLOTTED => 13-SEP-2012

TIME PLOTTED => 14:21

| Dist | COUNTY | ROUTE | POST MILES TOTAL PROJECT | SHEET No. | TOTAL SHEETS |
|---|---|---|---|---|---|
| 04 | Son | 101 | 25.6/29.2 | 96 | 615 |

REGISTERED CIVIL ENGINEER 8/3/11 DATE

9-10-12
PLANS APPROVAL DATE

REGISTERED PROFESSIONAL ENGINEER Fred J. Witteborn No. 56272 Exp. 12-31-12 CIVIL STATE OF CALIFORNIA

*THE STATE OF CALIFORNIA OR ITS OFFICERS OR AGENTS SHALL NOT BE RESPONSIBLE FOR THE ACCURACY OR COMPLETENESS OF SCANNED COPIES OF THIS PLAN SHEET.*

NOTE:

FOR ACCURATE RIGHT OF WAY DATA, CONTACT RIGHT OF WAY ENGINEERING AT THE DISTRICT OFFICE.

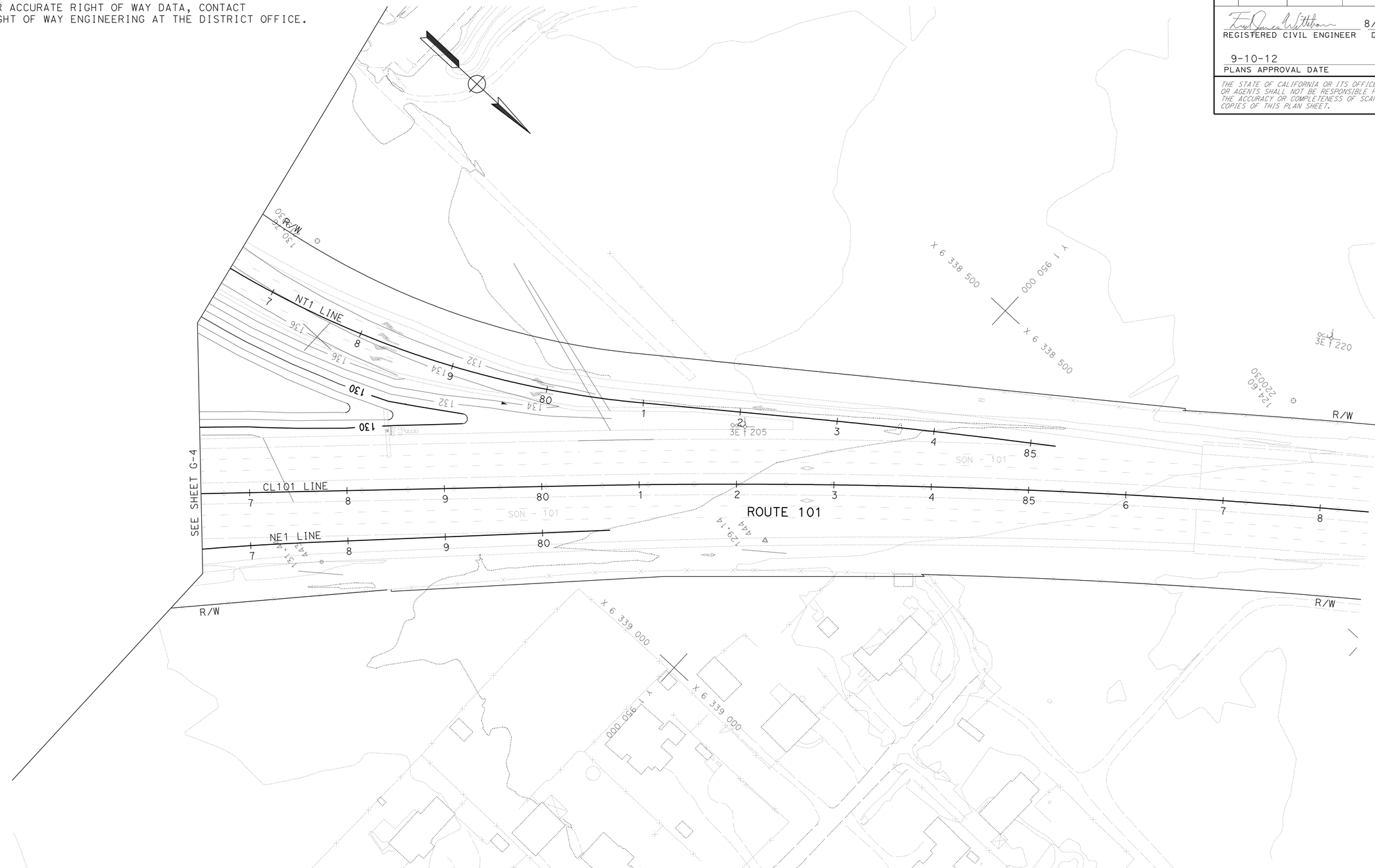


FOR NOTES, ABBREVIATIONS AND LEGEND, SEE SHEET G-1

THIS PLAN ACCURATE FOR CONTOUR GRADING WORK ONLY

# CONTOUR GRADING

SCALE: 1" = 50'

G-5

STATE OF CALIFORNIA - DEPARTMENT OF TRANSPORTATION

Caltrans

DESIGN

FUNCTIONAL SUPERVISOR: JONATHAN LEE

CALCULATED-DESIGNED BY: ABBEER AQRABAWI

CHECKED BY: JONATHAN LEE

REVISED BY: A

DATE REVISED: A

LAST REVISION 03-21-11

DATE PLOTTED => 13-SEP-2012
TIME PLOTTED => 14:21

BORDER LAST REVISED 7/2/2010

USERNAME => s121614
DGN FILE => 0400020945hd005.dgn

RELATIVE BORDER SCALE IS IN INCHES 0 1 2 3

UNIT 0751

PROJECT NUMBER & PHASE 04000209451

| Dist | COUNTY | ROUTE | POST MILES TOTAL PROJECT | SHEET No. | TOTAL SHEETS |
|---|---|---|---|---|---|
| 04 | Son | 101 | 25.6/29.2 | 97 | 615 |

REGISTERED CIVIL ENGINEER 8/3/11 DATE

9-10-12
PLANS APPROVAL DATE

REGISTERED PROFESSIONAL ENGINEER Fred J. Witteborn No. 56272 Exp. 12-31-12 CIVIL STATE OF CALIFORNIA

*THE STATE OF CALIFORNIA OR ITS OFFICERS OR AGENTS SHALL NOT BE RESPONSIBLE FOR THE ACCURACY OR COMPLETENESS OF SCANNED COPIES OF THIS PLAN SHEET.*

NOTE:

FOR ACCURATE RIGHT OF WAY DATA, CONTACT RIGHT OF WAY ENGINEERING AT THE DISTRICT OFFICE.

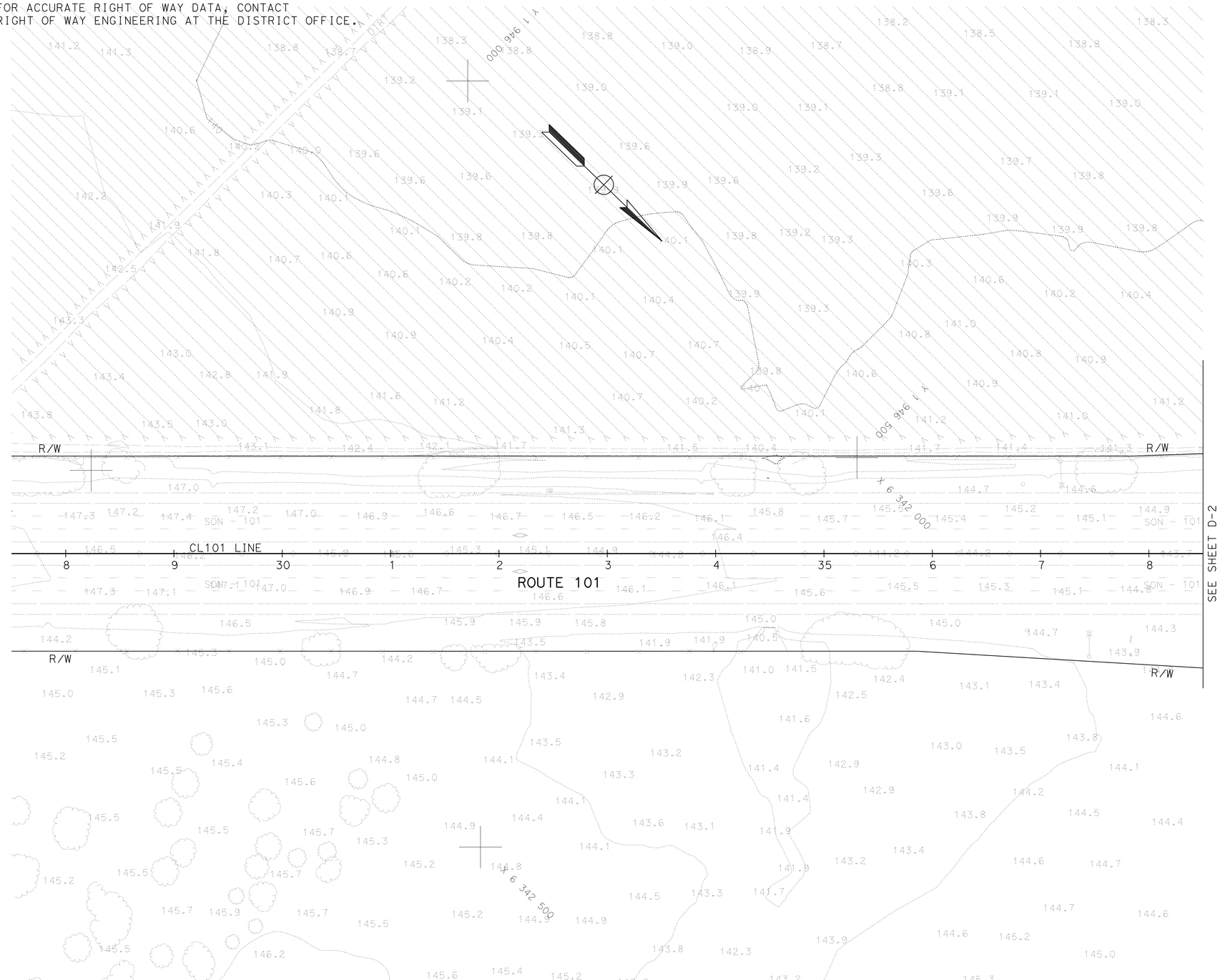


## NOTES:

1. TRANSITIONS FROM OG TO THE START OF THE DITCHES SHALL BE AT A 2:1 SLOPE
2. LOCATION OF EXISTING DRAINAGE FACILITIES ARE APPROXIMATE. VERIFY LOCATION AND ELEVATION OF EXISTING DRAINAGE FACILITIES PRIOR TO MODIFYING.
3. TOP OF GRATE ELEVATIONS STATION AND OFFSET TIES TO DRAINAGE STRUCTURES ARE MEASURED AS PER DETAIL ON SHEET DD-1.
4. ALL TIES TO STORM DRAIN MANHOLES ARE TO BE AT THE CENTER OF THE BASE UNLESS OTHERWISE NOTED.

## LEGEND:

| | |
|---|---|
| (No.) | DRAINAGE SYSTEM NUMBER |
| (a) | DRAINAGE UNIT |

## ABBREVIATIONS:

| | |
|---|---|
| ASP | ALTERNATIVE SLOTTED PIPE |
| HMAOD | HOT-MIXED ASPHALT OVERSIDE DRAIN |
| TC | TOP OF COVER |
| TG | TOP OF GRATE |
| w/ | WITH |
| GD | GUTTER DEPRESSION |

THIS PLAN ACCURATE FOR DRAINAGE WORK ONLY

# DRAINAGE PLAN

SCALE: 1" = 50'

D-1

| REVISED BY | DATE REVISED |
|---|---|
| A | A |

FRED WITTEBORN — JONATHAN LEE

CALCULATED-DESIGNED BY — CHECKED BY

FUNCTIONAL SUPERVISOR — JONATHAN LEE

STATE OF CALIFORNIA - DEPARTMENT OF TRANSPORTATION

Caltrans® DESIGN

LAST REVISION 12-13-11 | DATE PLOTTED => 13-SEP-2012 | TIME PLOTTED => 14:21

| Dist | COUNTY | ROUTE | POST MILES TOTAL PROJECT | SHEET No. | TOTAL SHEETS |
|---|---|---|---|---|---|
| 04 | Son | 101 | 25.6/29.2 | 98 | 615 |

REGISTERED CIVIL ENGINEER 8/3/11 DATE

9-10-12
PLANS APPROVAL DATE

REGISTERED PROFESSIONAL ENGINEER
Fred J. Witteborn
No. 56272
Exp. 12-31-12
CIVIL
STATE OF CALIFORNIA

*THE STATE OF CALIFORNIA OR ITS OFFICERS OR AGENTS SHALL NOT BE RESPONSIBLE FOR THE ACCURACY OR COMPLETENESS OF SCANNED COPIES OF THIS PLAN SHEET.*

NOTE:

FOR ACCURATE RIGHT OF WAY DATA, CONTACT RIGHT OF WAY ENGINEERING AT THE DISTRICT OFFICE.

FOR NOTES, ABBREVIATIONS AND LEGEND, SEE SHEET D-1

THIS PLAN ACCURATE FOR DRAINAGE WORK ONLY

# DRAINAGE PLAN

SCALE: 1" = 50'

D-2

STATE OF CALIFORNIA - DEPARTMENT OF TRANSPORTATION
Caltrans® DESIGN

FUNCTIONAL SUPERVISOR: JONATHAN LEE

CALCULATED-DESIGNED BY: FRED WITTEBORN
CHECKED BY: JONATHAN LEE

REVISED BY: A
DATE REVISED: A

LAST REVISION 04-20-11
DATE PLOTTED => 13-SEP-2012
TIME PLOTTED => 14:22

| Dist | COUNTY | ROUTE | POST MILES TOTAL PROJECT | SHEET No. | TOTAL SHEETS |
|---|---|---|---|---|---|
| 04 | Son | 101 | 25.6/29.2 | 99 | 615 |

REGISTERED CIVIL ENGINEER 8/3/11 DATE

9-10-12
PLANS APPROVAL DATE

REGISTERED PROFESSIONAL ENGINEER Fred J. Witteborn No. 56272 Exp. 12-31-12 CIVIL STATE OF CALIFORNIA

*THE STATE OF CALIFORNIA OR ITS OFFICERS OR AGENTS SHALL NOT BE RESPONSIBLE FOR THE ACCURACY OR COMPLETENESS OF SCANNED COPIES OF THIS PLAN SHEET.*

NOTE:

FOR ACCURATE RIGHT OF WAY DATA, CONTACT RIGHT OF WAY ENGINEERING AT THE DISTRICT OFFICE.

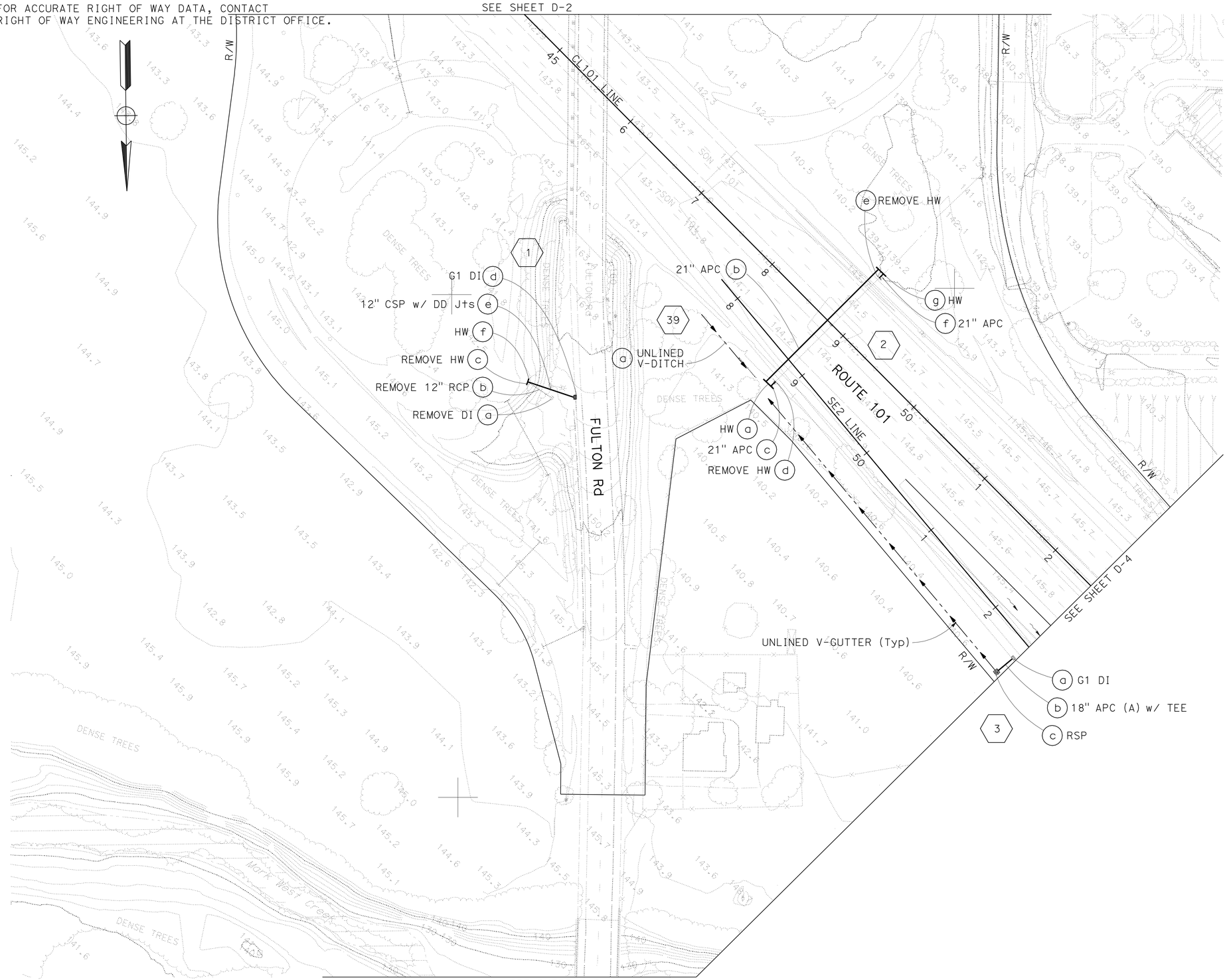


FOR NOTES, ABBREVIATIONS AND LEGEND, SEE SHEET D-1

THIS PLAN ACCURATE FOR DRAINAGE WORK ONLY

# DRAINAGE PLAN

SCALE: 1" = 50'

D-3

| REVISED BY | DATE REVISED |
|---|---|
| A | A |

FRED WITTEBORN — JONATHAN LEE

CALCULATED-DESIGNED BY — CHECKED BY

FUNCTIONAL SUPERVISOR: JONATHAN LEE

STATE OF CALIFORNIA - DEPARTMENT OF TRANSPORTATION

Caltrans® DESIGN

LAST REVISION 02-14-12 — DATE PLOTTED => 13-SEP-2012 — TIME PLOTTED => 14:22

| Dist | COUNTY | ROUTE | POST MILES TOTAL PROJECT | SHEET No. | TOTAL SHEETS |
|---|---|---|---|---|---|
| 04 | Son | 101 | 25.6/29.2 | 100 | 615 |

REGISTERED CIVIL ENGINEER 8/3/11 DATE

9-10-12
PLANS APPROVAL DATE

REGISTERED PROFESSIONAL ENGINEER Fred J. Witteborn No. 56272 Exp. 12-31-12 CIVIL STATE OF CALIFORNIA

*THE STATE OF CALIFORNIA OR ITS OFFICERS OR AGENTS SHALL NOT BE RESPONSIBLE FOR THE ACCURACY OR COMPLETENESS OF SCANNED COPIES OF THIS PLAN SHEET.*

NOTE:

FOR ACCURATE RIGHT OF WAY DATA, CONTACT RIGHT OF WAY ENGINEERING AT THE DISTRICT OFFICE.

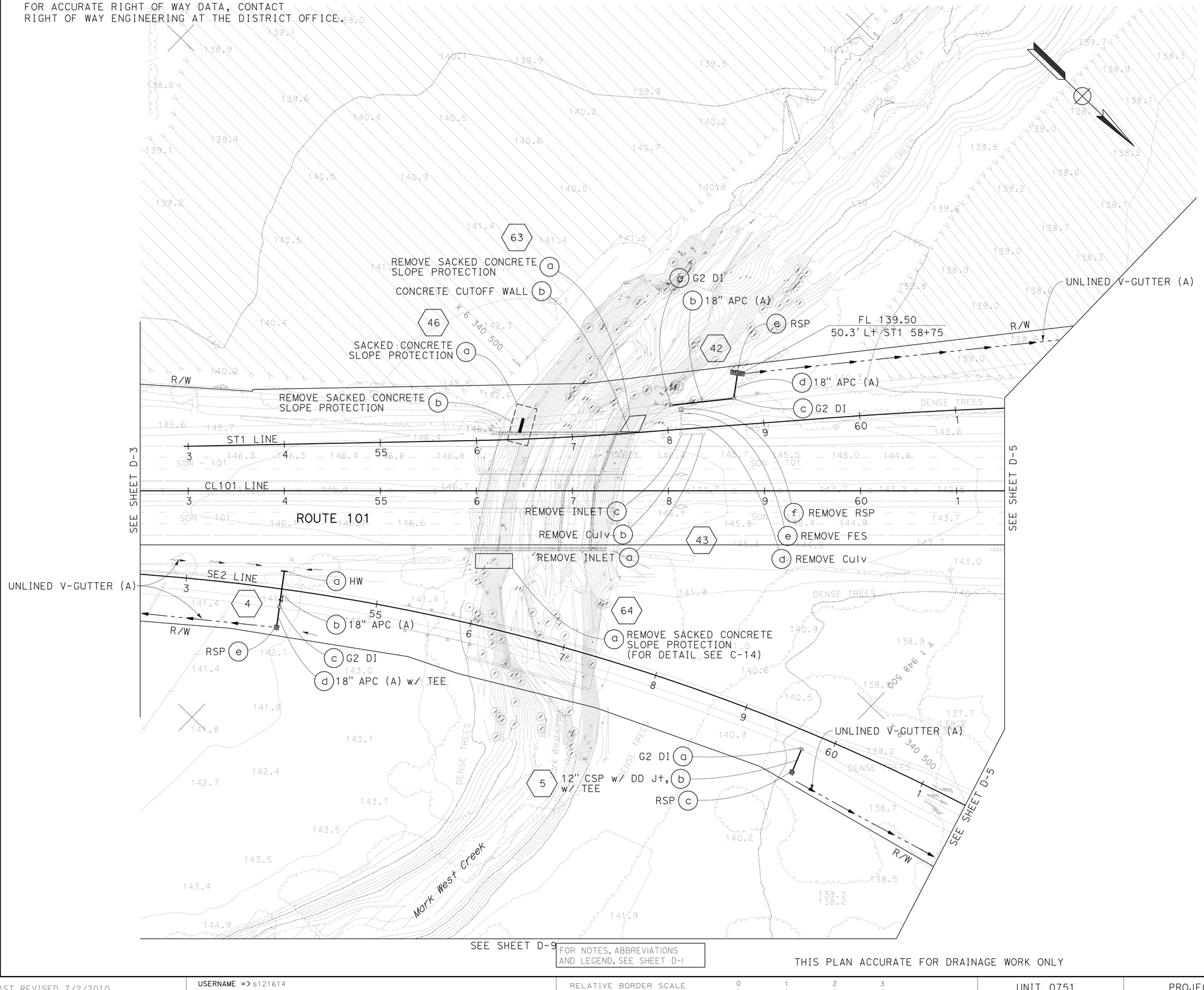


FOR NOTES, ABBREVIATIONS AND LEGEND, SEE SHEET D-1

THIS PLAN ACCURATE FOR DRAINAGE WORK ONLY

# DRAINAGE PLAN

SCALE: 1" = 50'

D-4

STATE OF CALIFORNIA - DEPARTMENT OF TRANSPORTATION

Caltrans DESIGN

FUNCTIONAL SUPERVISOR: JONATHAN LEE

CALCULATED-DESIGNED BY: FRED WITTEBORN

CHECKED BY: JONATHAN LEE

REVISED BY: A

DATE REVISED: A

LAST REVISION 08-01-11

DATE PLOTTED => 13-SEP-2012

TIME PLOTTED => 14:22