NOTES:

1. FOR ACCURATE RIGHT OF WAY DATA, CONTACT RIGHT OF WAY ENGINEERING AT THE DISTRICT OFFICE.
2. DIMENSION AND STATION LINES REFERENCE CENTER OF POLES, AND/OR POLE FOUNDATIONS.

Dist	COUNTY	ROUTE	POST MILES TOTAL PROJECT	SHEET No.	TOTAL SHEETS
04	Ala	880	2.9/27.3	801	906

REGISTERED ELECTRICAL ENGINEER — 6/22/15 DATE

6-22-15
PLANS APPROVAL DATE

REGISTERED PROFESSIONAL ENGINEER
KEVIN AGUIGUI
No. 19880
Exp. 3/31/16
ELECTRICAL
STATE OF CALIFORNIA

THE STATE OF CALIFORNIA OR ITS OFFICERS OR AGENTS SHALL NOT BE RESPONSIBLE FOR THE ACCURACY OR COMPLETENESS OF SCANNED COPIES OF THIS PLAN SHEET.

KIMLEY-HORN AND ASSOC.
1300 CLAY STREET
SUITE 325
OAKLAND, CA 94612

BAY AREA INFRASTRUCTURE FINANCING AUTHORITY
101 EIGHTH ST, 3rd FLOOR
OAKLAND, CA 94607

HAYWARD

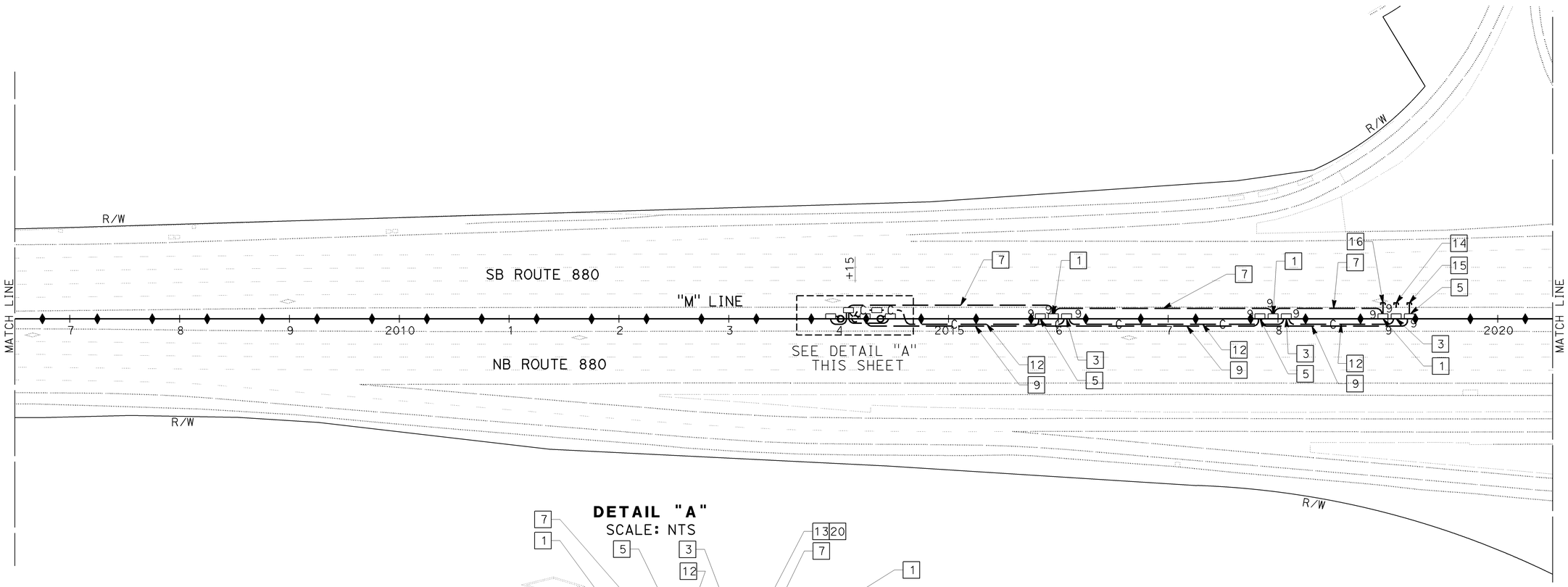

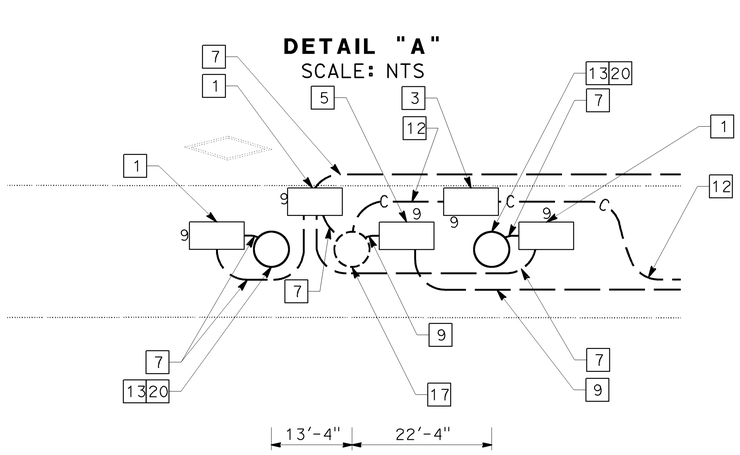

FOR NOTES, ABBREVIATIONS, AND LEGEND, SEE SHEET E-115

TOLLING SYSTEM INFRASTRUCTURE

SCALE: 1" = 50'

APPROVED FOR ELECTRICAL WORK ONLY

E-160

REVISED BY	DATE REVISED
VP	6/22/15

CALCULATED-DESIGNED BY: VASAVI PANNALA
CHECKED BY: RANDAL DURRENBERGER
CONSULTANT FUNCTIONAL SUPERVISOR: KEVIN AGUIGUI
STATE OF CALIFORNIA - DEPARTMENT OF TRANSPORTATION
Caltrans

LAST REVISION | DATE PLOTTED => 19-AUG-2015
TIME PLOTTED => 12:28

BORDER LAST REVISED 7/2/2010 | USERNAME => s126849 | DGN FILE => 04140004211ua160.dgn | RELATIVE BORDER SCALE IS IN INCHES 0 1 2 3 | UNIT 0727 | PROJECT NUMBER & PHASE 04140004211

NOTES:

1. FOR ACCURATE RIGHT OF WAY DATA, CONTACT RIGHT OF WAY ENGINEERING AT THE DISTRICT OFFICE.
2. DIMENSION AND STATION LINES REFERENCE CENTER OF POLES, AND/OR POLE FOUNDATIONS.

Dist	COUNTY	ROUTE	POST MILES TOTAL PROJECT	SHEET No.	TOTAL SHEETS
04	Ala	880	2.9/27.3	802	906

6/22/15
REGISTERED ELECTRICAL ENGINEER DATE

KEVIN AGUIGUI
No. 19880
Exp. 3/31/16
ELECTRICAL
REGISTERED PROFESSIONAL ENGINEER
STATE OF CALIFORNIA

6-22-15
PLANS APPROVAL DATE

THE STATE OF CALIFORNIA OR ITS OFFICERS OR AGENTS SHALL NOT BE RESPONSIBLE FOR THE ACCURACY OR COMPLETENESS OF SCANNED COPIES OF THIS PLAN SHEET.

KIMLEY-HORN AND ASSOC.
1300 CLAY STREET
SUITE 325
OAKLAND, CA 94612

BAY AREA INFRASTRUCTURE FINANCING AUTHORITY
101 EIGHTH ST, 3rd FLOOR
OAKLAND, CA 94607

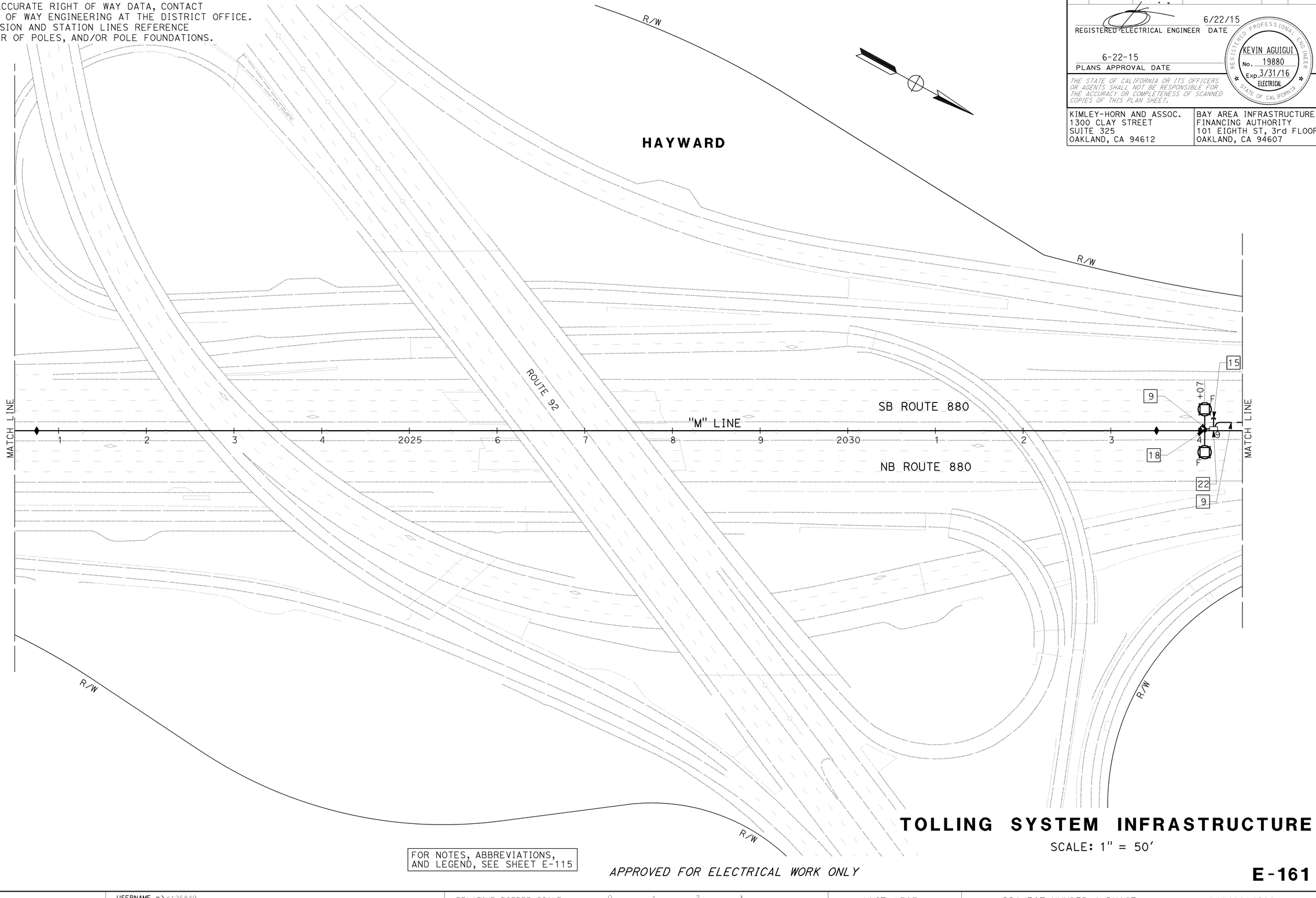

FOR NOTES, ABBREVIATIONS, AND LEGEND, SEE SHEET E-115

APPROVED FOR ELECTRICAL WORK ONLY

TOLLING SYSTEM INFRASTRUCTURE

SCALE: 1" = 50'

E-161

	REVISED BY	DATE REVISED
	VP	6/22/15

CALCULATED-DESIGNED BY: VASAVI PANNALA
CHECKED BY: RANDAL DURRENBERGER
CONSULTANT FUNCTIONAL SUPERVISOR: KEVIN AGUIGUI

STATE OF CALIFORNIA - DEPARTMENT OF TRANSPORTATION
Caltrans

LAST REVISION DATE PLOTTED => 19-AUG-2015
TIME PLOTTED => 12:28

NOTES:

1. FOR ACCURATE RIGHT OF WAY DATA, CONTACT RIGHT OF WAY ENGINEERING AT THE DISTRICT OFFICE.
2. DIMENSION AND STATION LINES REFERENCE CENTER OF POLES, AND/OR POLE FOUNDATIONS.

Dist	COUNTY	ROUTE	POST MILES TOTAL PROJECT	SHEET No.	TOTAL SHEETS
04	Ala	880	2.9/27.3	803	906

REGISTERED ELECTRICAL ENGINEER 6/22/15 DATE

6-22-15
PLANS APPROVAL DATE

REGISTERED PROFESSIONAL ENGINEER KEVIN AGUIGUI No. 19880 Exp. 3/31/16 ELECTRICAL STATE OF CALIFORNIA

THE STATE OF CALIFORNIA OR ITS OFFICERS OR AGENTS SHALL NOT BE RESPONSIBLE FOR THE ACCURACY OR COMPLETENESS OF SCANNED COPIES OF THIS PLAN SHEET.

KIMLEY-HORN AND ASSOC.
1300 CLAY STREET
SUITE 325
OAKLAND, CA 94612

BAY AREA INFRASTRUCTURE FINANCING AUTHORITY
101 EIGHTH ST, 3rd FLOOR
OAKLAND, CA 94607

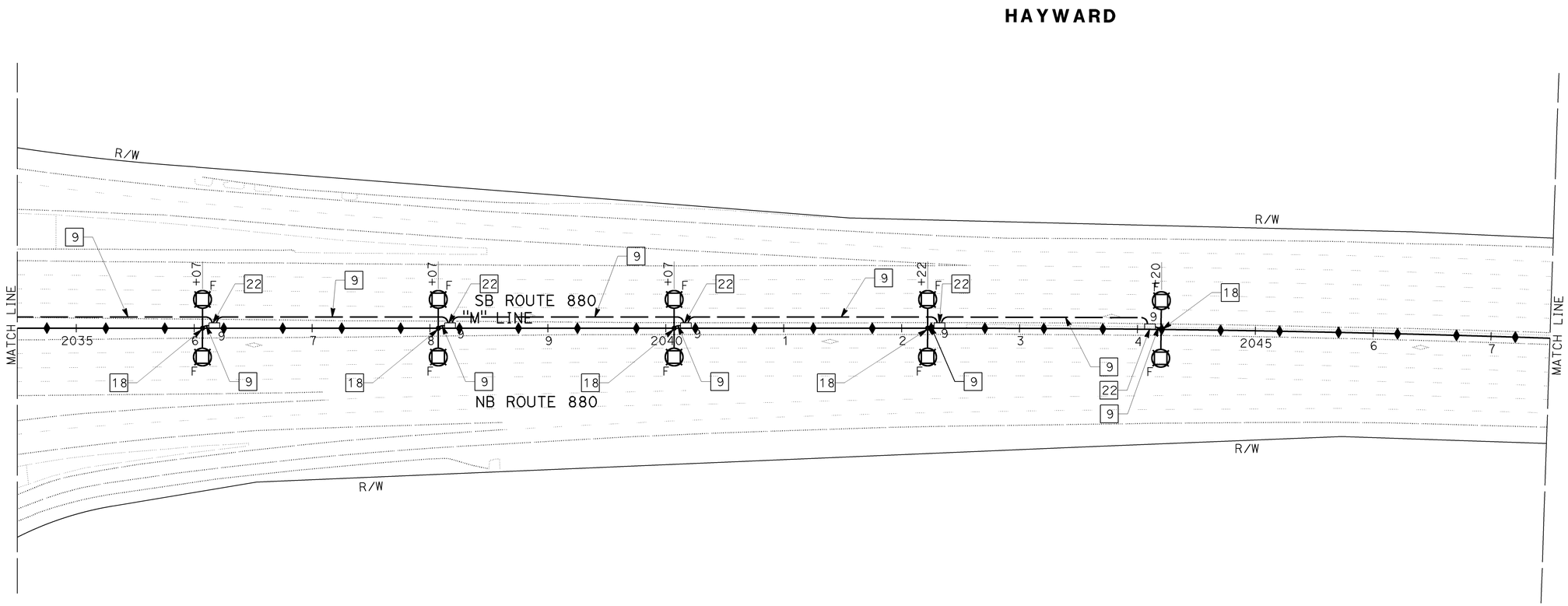

TOLLING SYSTEM INFRASTRUCTURE

SCALE: 1" = 50'

FOR NOTES, ABBREVIATIONS, AND LEGEND, SEE SHEET E-115

APPROVED FOR ELECTRICAL WORK ONLY

E-162

STATE OF CALIFORNIA - DEPARTMENT OF TRANSPORTATION
Caltrans

CONSULTANT FUNCTIONAL SUPERVISOR: KEVIN AGUIGUI
CALCULATED-DESIGNED BY: VASAVI PANNALA
CHECKED BY: RANDAL DURRENBERGER
REVISED BY: VP
DATE REVISED: 6/22/15

LAST REVISION 06-22-15
DATE PLOTTED => 19-AUG-2015
TIME PLOTTED => 12:29

Dist	COUNTY	ROUTE	POST MILES TOTAL PROJECT	SHEET No.	TOTAL SHEETS
04	Ala	880	2.9/27.3	804	906

REGISTERED ELECTRICAL ENGINEER 6/22/15 DATE

6-22-15
PLANS APPROVAL DATE

REGISTERED PROFESSIONAL ENGINEER KEVIN AGUIGUI No. 19880 Exp. 3/31/16 ELECTRICAL STATE OF CALIFORNIA

THE STATE OF CALIFORNIA OR ITS OFFICERS OR AGENTS SHALL NOT BE RESPONSIBLE FOR THE ACCURACY OR COMPLETENESS OF SCANNED COPIES OF THIS PLAN SHEET.

KIMLEY-HORN AND ASSOC.
1300 CLAY STREET
SUITE 325
OAKLAND, CA 94612

BAY AREA INFRASTRUCTURE FINANCING AUTHORITY
101 EIGHTH ST, 3rd FLOOR
OAKLAND, CA 94607

NOTES:

1. FOR ACCURATE RIGHT OF WAY DATA, CONTACT RIGHT OF WAY ENGINEERING AT THE DISTRICT OFFICE.
2. DIMENSION AND STATION LINES REFERENCE CENTER OF POLES, AND/OR POLE FOUNDATIONS.

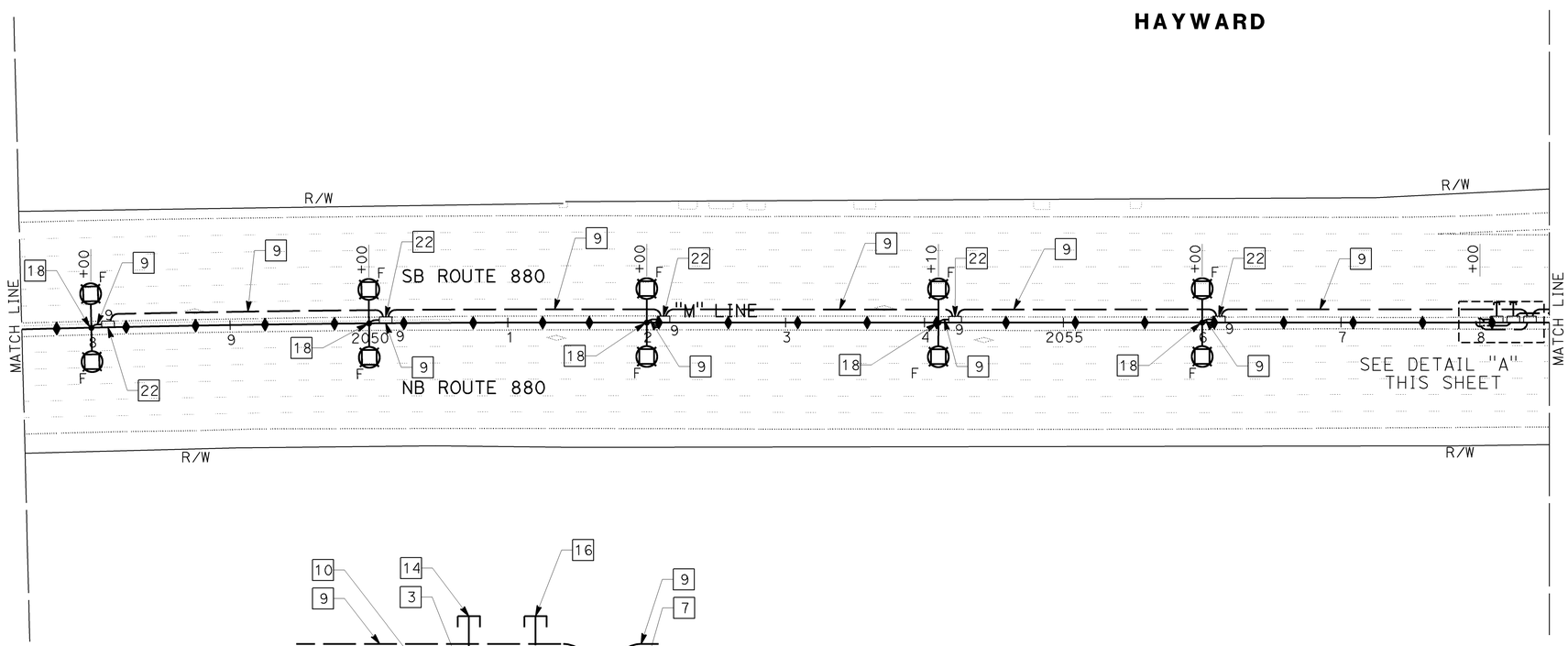

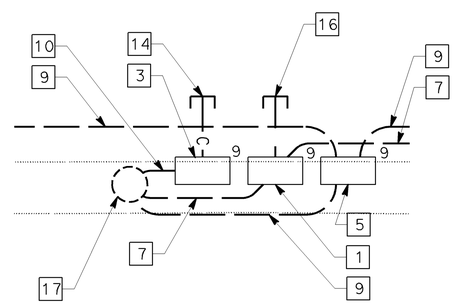

DETAIL "A"
SCALE: NTS

TOLLING SYSTEM INFRASTRUCTURE

SCALE: 1" = 50'

FOR NOTES, ABBREVIATIONS, AND LEGEND, SEE SHEET E-115

APPROVED FOR ELECTRICAL WORK ONLY

E-163

STATE OF CALIFORNIA - DEPARTMENT OF TRANSPORTATION
Caltrans

CONSULTANT FUNCTIONAL SUPERVISOR: KEVIN AGUIGUI
CALCULATED-DESIGNED BY: VASAVI PANNALA
CHECKED BY: RANDAL DURRENBERGER
REVISED BY: VP
DATE REVISED: 6/22/15

LAST REVISION 06-22-15
DATE PLOTTED => 19-AUG-2015
TIME PLOTTED => 12:29

NOTES:

1. FOR ACCURATE RIGHT OF WAY DATA, CONTACT RIGHT OF WAY ENGINEERING AT THE DISTRICT OFFICE.
2. DIMENSION AND STATION LINES REFERENCE CENTER OF POLES, AND/OR POLE FOUNDATIONS.

Dist	COUNTY	ROUTE	POST MILES TOTAL PROJECT	SHEET No.	TOTAL SHEETS
04	Ala	880	2.9/27.3	805	906

6/22/15
REGISTERED ELECTRICAL ENGINEER DATE

6-22-15
PLANS APPROVAL DATE

REGISTERED PROFESSIONAL ENGINEER
KEVIN AGUIGUI
No. 19880
Exp. 3/31/16
ELECTRICAL
STATE OF CALIFORNIA

THE STATE OF CALIFORNIA OR ITS OFFICERS OR AGENTS SHALL NOT BE RESPONSIBLE FOR THE ACCURACY OR COMPLETENESS OF SCANNED COPIES OF THIS PLAN SHEET.

KIMLEY-HORN AND ASSOC.
1300 CLAY STREET
SUITE 325
OAKLAND, CA 94612

BAY AREA INFRASTRUCTURE FINANCING AUTHORITY
101 EIGHTH ST, 3rd FLOOR
OAKLAND, CA 94607

HAYWARD

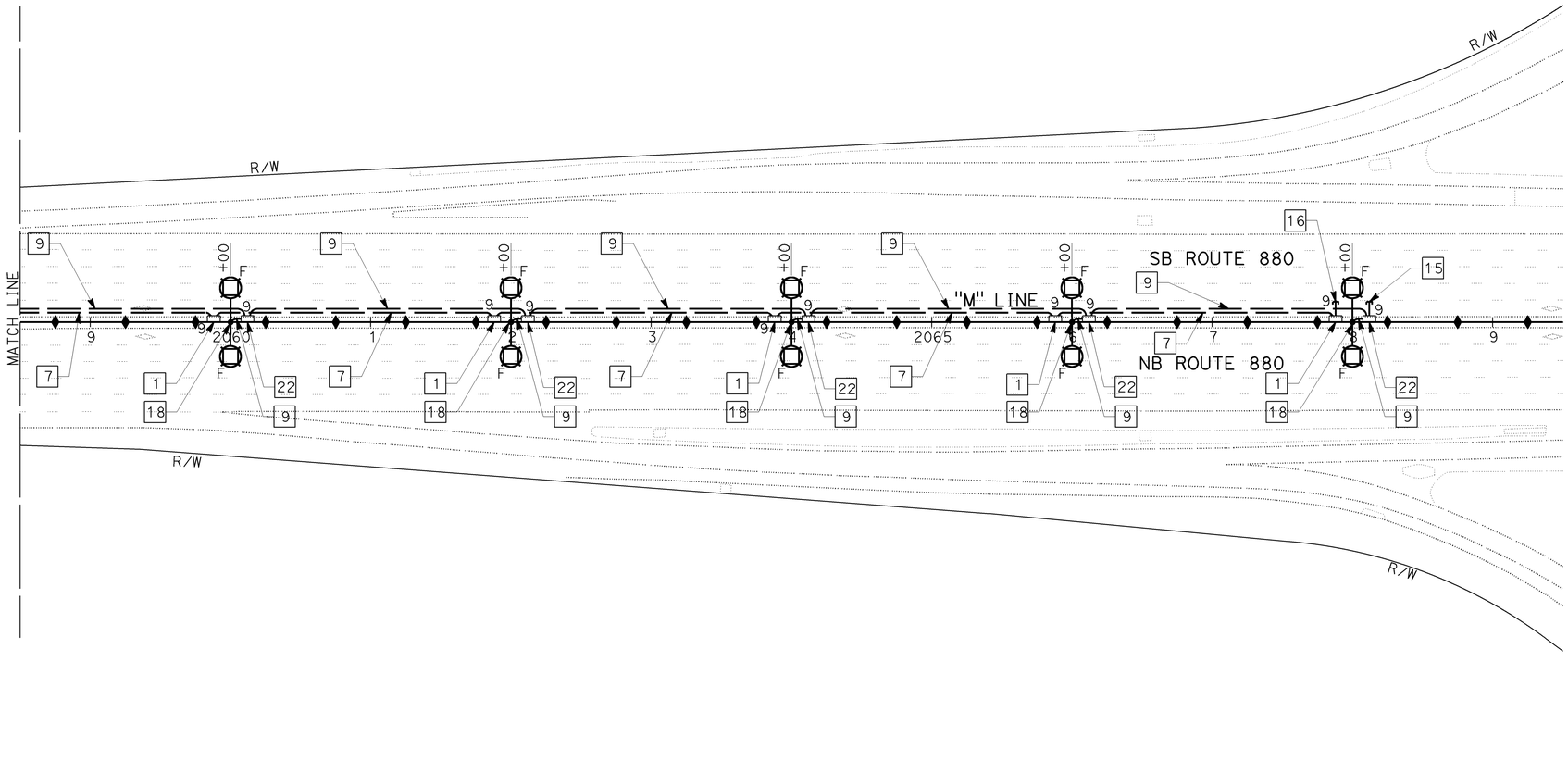

TOLLING SYSTEM INFRASTRUCTURE

SCALE: 1" = 50'

FOR NOTES, ABBREVIATIONS, AND LEGEND, SEE SHEET E-115

APPROVED FOR ELECTRICAL WORK ONLY

E-164

CALCULATED-DESIGNED BY		
CHECKED BY	RANDAL DURRENBERGER	6/22/15
CONSULTANT FUNCTIONAL SUPERVISOR	KEVIN AGUIGUI	
REVISED BY	VP	
DATE REVISED		

STATE OF CALIFORNIA - DEPARTMENT OF TRANSPORTATION
Caltrans

LAST REVISION | DATE PLOTTED => 19-AUG-2015
06-22-15 | TIME PLOTTED => 12:29

NOTES:

1. FOR ACCURATE RIGHT OF WAY DATA, CONTACT RIGHT OF WAY ENGINEERING AT THE DISTRICT OFFICE.
2. DIMENSION AND STATION LINES REFERENCE CENTER OF POLES, AND/OR POLE FOUNDATIONS.

Dist	COUNTY	ROUTE	POST MILES TOTAL PROJECT	SHEET No.	TOTAL SHEETS
04	Ala	880	2.9/27.3	806	906

6/22/15
REGISTERED ELECTRICAL ENGINEER DATE

6-22-15
PLANS APPROVAL DATE

REGISTERED PROFESSIONAL ENGINEER
KEVIN AGUIGUI
No. 19880
Exp. 3/31/16
ELECTRICAL
STATE OF CALIFORNIA

THE STATE OF CALIFORNIA OR ITS OFFICERS OR AGENTS SHALL NOT BE RESPONSIBLE FOR THE ACCURACY OR COMPLETENESS OF SCANNED COPIES OF THIS PLAN SHEET.

KIMLEY-HORN AND ASSOC.
1300 CLAY STREET
SUITE 325
OAKLAND, CA 94612

BAY AREA INFRASTRUCTURE FINANCING AUTHORITY
101 EIGHTH ST, 3rd FLOOR
OAKLAND, CA 94607

HAYWARD

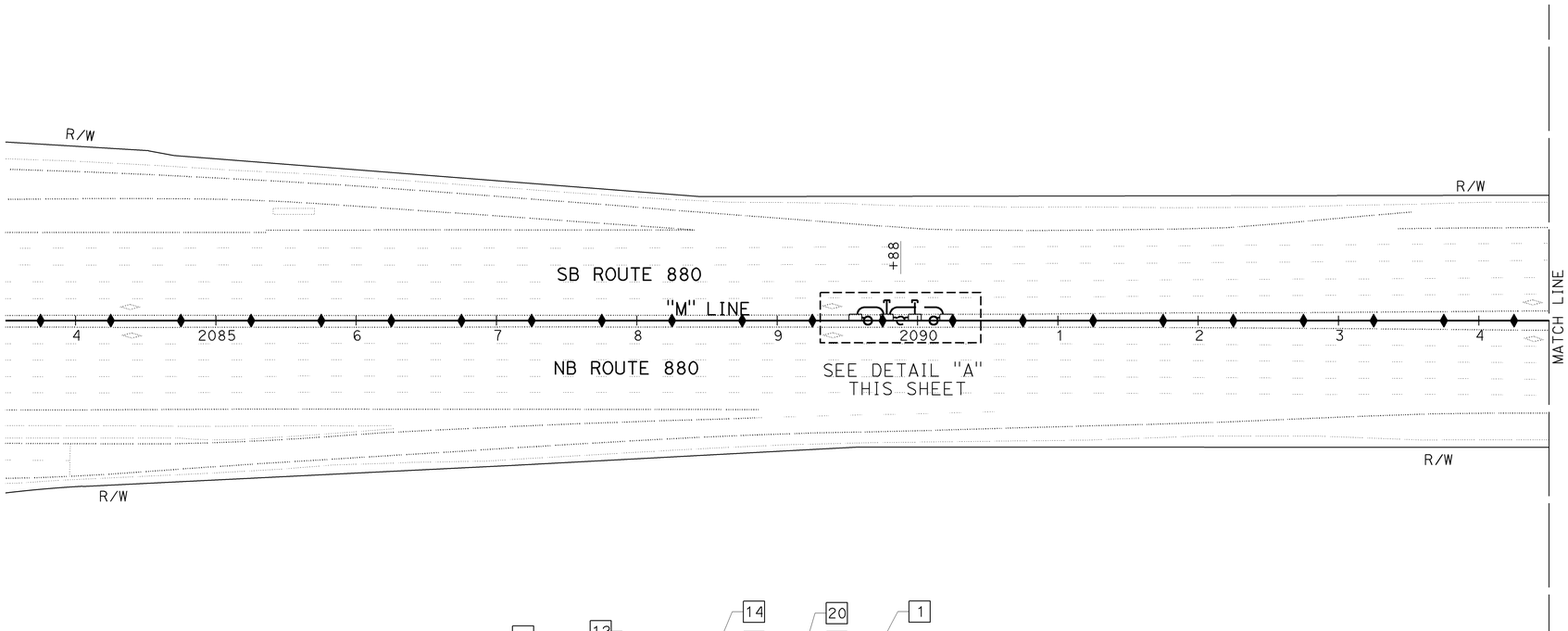

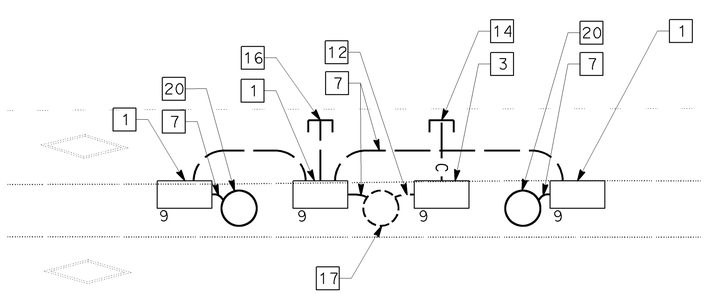

DETAIL "A"
SCALE: NTS

FOR NOTES, ABBREVIATIONS, AND LEGEND, SEE SHEET E-115

APPROVED FOR ELECTRICAL WORK ONLY

TOLLING SYSTEM INFRASTRUCTURE

SCALE: 1" = 50'

E-165

STATE OF CALIFORNIA - DEPARTMENT OF TRANSPORTATION
Caltrans
CONSULTANT FUNCTIONAL SUPERVISOR: KEVIN AGUIGUI
CALCULATED-DESIGNED BY
CHECKED BY: RANDAL DURRENBERGER
REVISED BY: VP
DATE REVISED: 6/22/15
VASAVI PANNALA

LAST REVISION DATE PLOTTED => 19-AUG-2015
06-22-15 TIME PLOTTED => 12:29

BORDER LAST REVISED 7/2/2010
USERNAME => s126849
DGN FILE => 0414000421ua165.dgn
RELATIVE BORDER SCALE IS IN INCHES 0 1 2 3
UNIT 0727
PROJECT NUMBER & PHASE 04140004211

Dist	COUNTY	ROUTE	POST MILES TOTAL PROJECT	SHEET No.	TOTAL SHEETS
04	Ala	880	2.9/27.3	807	906

REGISTERED ELECTRICAL ENGINEER 6/22/15 DATE

6-22-15
PLANS APPROVAL DATE

REGISTERED PROFESSIONAL ENGINEER KEVIN AGUIGUI No. 19880 Exp. 3/31/16 ELECTRICAL STATE OF CALIFORNIA

THE STATE OF CALIFORNIA OR ITS OFFICERS OR AGENTS SHALL NOT BE RESPONSIBLE FOR THE ACCURACY OR COMPLETENESS OF SCANNED COPIES OF THIS PLAN SHEET.

KIMLEY-HORN AND ASSOC.
1300 CLAY STREET
SUITE 325
OAKLAND, CA 94612

BAY AREA INFRASTRUCTURE FINANCING AUTHORITY
101 EIGHTH ST, 3rd FLOOR
OAKLAND, CA 94607

NOTES:

1. FOR ACCURATE RIGHT OF WAY DATA, CONTACT RIGHT OF WAY ENGINEERING AT THE DISTRICT OFFICE.
2. DIMENSION AND STATION LINES REFERENCE CENTER OF POLES, AND/OR POLE FOUNDATIONS.

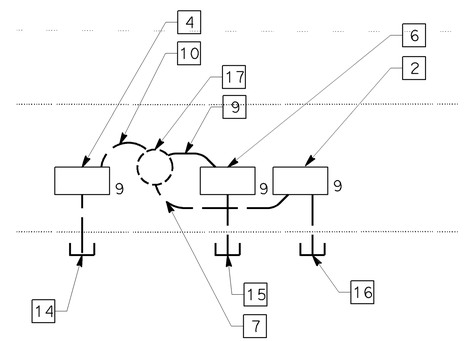

DETAIL "A"
SCALE: NTS

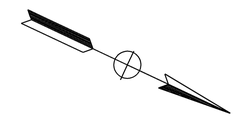

HAYWARD

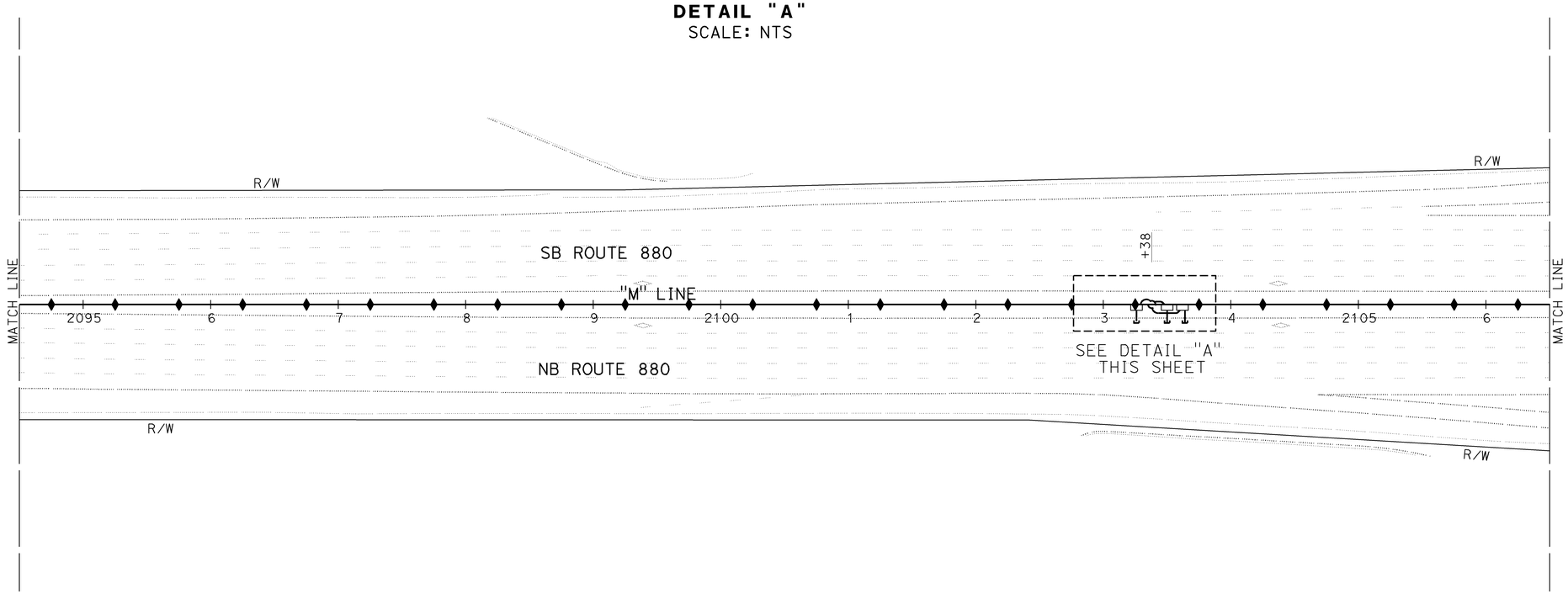

TOLLING SYSTEM INFRASTRUCTURE

SCALE: 1" = 50'

FOR NOTES, ABBREVIATIONS, AND LEGEND, SEE SHEET E-115

APPROVED FOR ELECTRICAL WORK ONLY

E-166

STATE OF CALIFORNIA - DEPARTMENT OF TRANSPORTATION
Caltrans®

CONSULTANT FUNCTIONAL SUPERVISOR: KEVIN AGUIGUI
CALCULATED-DESIGNED BY: VASAVI PANNALA
CHECKED BY: RANDAL DURRENBERGER
REVISED BY: VP
DATE REVISED: 6/22/15

LAST REVISION 06-22-15
DATE PLOTTED => 19-AUG-2015
TIME PLOTTED => 12:29

NOTES:

1. FOR ACCURATE RIGHT OF WAY DATA, CONTACT RIGHT OF WAY ENGINEERING AT THE DISTRICT OFFICE.
2. DIMENSION AND STATION LINES REFERENCE CENTER OF POLES, AND/OR POLE FOUNDATIONS.

Dist	COUNTY	ROUTE	POST MILES TOTAL PROJECT	SHEET No.	TOTAL SHEETS
04	Ala	880	2.9/27.3	808	906

6/22/15
REGISTERED ELECTRICAL ENGINEER DATE

6-22-15
PLANS APPROVAL DATE

REGISTERED PROFESSIONAL ENGINEER
KEVIN AGUIGUI
No. 19880
Exp. 3/31/16
ELECTRICAL
STATE OF CALIFORNIA

THE STATE OF CALIFORNIA OR ITS OFFICERS OR AGENTS SHALL NOT BE RESPONSIBLE FOR THE ACCURACY OR COMPLETENESS OF SCANNED COPIES OF THIS PLAN SHEET.

KIMLEY-HORN AND ASSOC.
1300 CLAY STREET
SUITE 325
OAKLAND, CA 94612

BAY AREA INFRASTRUCTURE FINANCING AUTHORITY
101 EIGHTH ST, 3rd FLOOR
OAKLAND, CA 94607

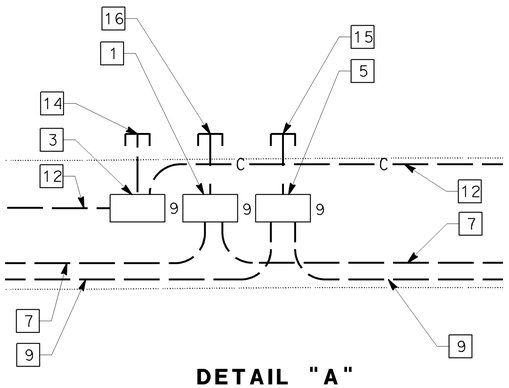

DETAIL "A"
SCALE: NTS

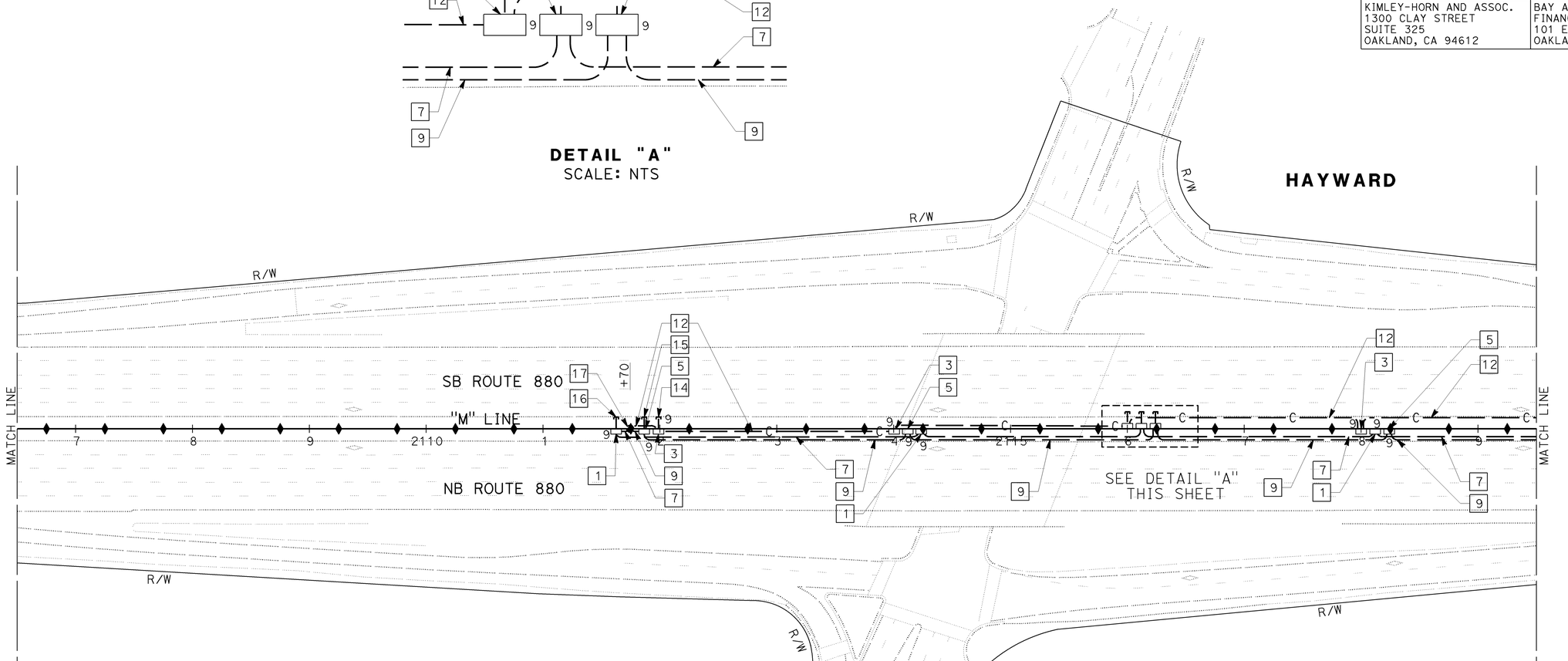

TOLLING SYSTEM INFRASTRUCTURE

SCALE: 1" = 50'

FOR NOTES, ABBREVIATIONS, AND LEGEND, SEE SHEET E-115

APPROVED FOR ELECTRICAL WORK ONLY

E-167

STATE OF CALIFORNIA - DEPARTMENT OF TRANSPORTATION
Caltrans

CONSULTANT FUNCTIONAL SUPERVISOR: KEVIN AGUIGUI

CALCULATED-DESIGNED BY	CHECKED BY	REVISED BY	DATE REVISED
VASAVI PANNALA	RANDAL DURRENBERGER	VP	6/22/15

LAST REVISION DATE PLOTTED => 19-AUG-2015
TIME PLOTTED => 12:30
06-22-15

BORDER LAST REVISED 7/2/2010

USERNAME => s126849
DGN FILE => 04140004211ug167.dgn

RELATIVE BORDER SCALE IS IN INCHES 0 1 2 3

UNIT 0727 | PROJECT NUMBER & PHASE 04140004211

NOTES:

1. FOR ACCURATE RIGHT OF WAY DATA, CONTACT RIGHT OF WAY ENGINEERING AT THE DISTRICT OFFICE.
2. DIMENSION AND STATION LINES REFERENCE CENTER OF POLES, AND/OR POLE FOUNDATIONS.

Dist	COUNTY	ROUTE	POST MILES TOTAL PROJECT	SHEET No.	TOTAL SHEETS
04	Ala	880	2.9/27.3	809	906

6/22/15
REGISTERED ELECTRICAL ENGINEER DATE

6-22-15
PLANS APPROVAL DATE

REGISTERED PROFESSIONAL ENGINEER
KEVIN AGUIGUI
No. 19880
Exp. 3/31/16
ELECTRICAL
STATE OF CALIFORNIA

THE STATE OF CALIFORNIA OR ITS OFFICERS OR AGENTS SHALL NOT BE RESPONSIBLE FOR THE ACCURACY OR COMPLETENESS OF SCANNED COPIES OF THIS PLAN SHEET.

KIMLEY-HORN AND ASSOC.
1300 CLAY STREET
SUITE 325
OAKLAND, CA 94612

BAY AREA INFRASTRUCTURE FINANCING AUTHORITY
101 EIGHTH ST, 3rd FLOOR
OAKLAND, CA 94607

HAYWARD

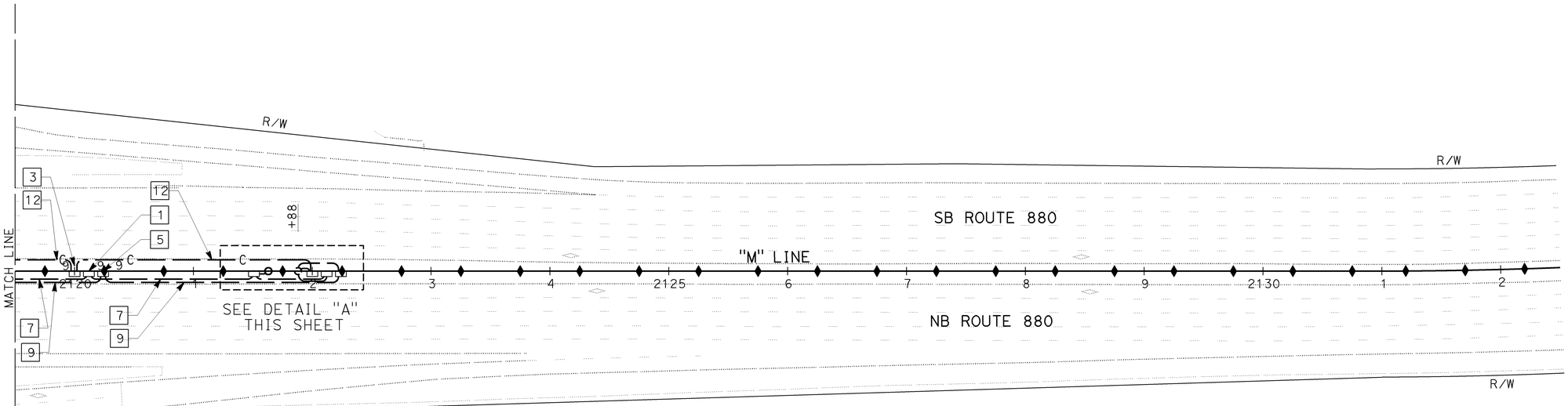

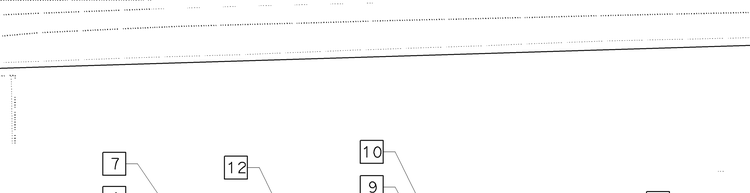

DETAIL "A"
SCALE: NTS

TOLLING SYSTEM INFRASTRUCTURE

SCALE: 1" = 50'

FOR NOTES, ABBREVIATIONS, AND LEGEND, SEE SHEET E-115

APPROVED FOR ELECTRICAL WORK ONLY

E-168

CALCULATED-DESIGNED BY	CHECKED BY	REVISED BY	DATE REVISED
VASAVI PANNALA	RANDAL DURRENBERGER	VP	6/22/15

CONSULTANT FUNCTIONAL SUPERVISOR: KEVIN AGUIGUI

STATE OF CALIFORNIA - DEPARTMENT OF TRANSPORTATION
Caltrans

LAST REVISION: DATE PLOTTED => 19-AUG-2015
TIME PLOTTED => 12:30

BORDER LAST REVISED 7/2/2010 | USERNAME => s126849 | DGN FILE => 0414000421ua168.dgn | RELATIVE BORDER SCALE IS IN INCHES 0 1 2 3 | UNIT 0727 | PROJECT NUMBER & PHASE 04140004211

NOTES:

1. FOR ACCURATE RIGHT OF WAY DATA, CONTACT RIGHT OF WAY ENGINEERING AT THE DISTRICT OFFICE.
2. DIMENSION AND STATION LINES REFERENCE CENTER OF POLES, AND/OR POLE FOUNDATIONS.

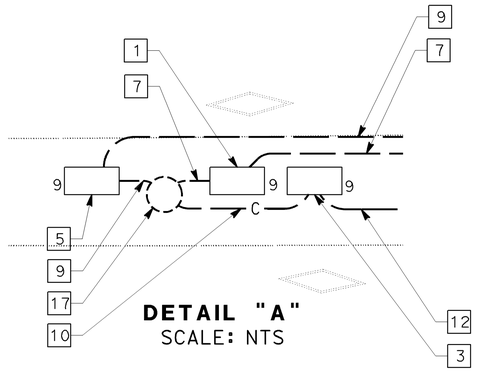

DETAIL "A"
SCALE: NTS

Dist	COUNTY	ROUTE	POST MILES TOTAL PROJECT	SHEET No.	TOTAL SHEETS
04	Ala	880	2.9/27.3	810	906

REGISTERED ELECTRICAL ENGINEER — DATE 6/22/15

PLANS APPROVAL DATE 6-22-15

REGISTERED PROFESSIONAL ENGINEER — KEVIN AGUIGUI — No. 19880 — Exp. 3/31/16 ELECTRICAL — STATE OF CALIFORNIA

THE STATE OF CALIFORNIA OR ITS OFFICERS OR AGENTS SHALL NOT BE RESPONSIBLE FOR THE ACCURACY OR COMPLETENESS OF SCANNED COPIES OF THIS PLAN SHEET.

KIMLEY-HORN AND ASSOC.
1300 CLAY STREET
SUITE 325
OAKLAND, CA 94612

BAY AREA INFRASTRUCTURE FINANCING AUTHORITY
101 EIGHTH ST, 3rd FLOOR
OAKLAND, CA 94607

SAN LORENZO

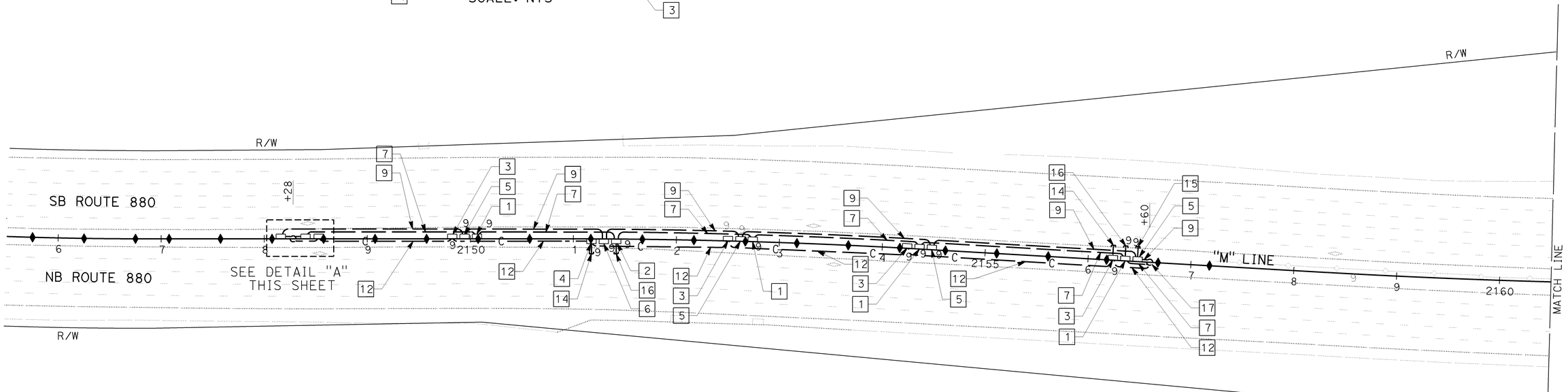

TOLLING SYSTEM INFRASTRUCTURE

SCALE: 1" = 50'

FOR NOTES, ABBREVIATIONS, AND LEGEND, SEE SHEET E-115

APPROVED FOR ELECTRICAL WORK ONLY

E-169

REVISED BY	DATE REVISED
VP	6/22/15

VASAVI PANNALA — CALCULATED-DESIGNED BY
RANDAL DURRENBERGER — CHECKED BY
KEVIN AGUIGUI — CONSULTANT FUNCTIONAL SUPERVISOR
STATE OF CALIFORNIA - DEPARTMENT OF TRANSPORTATION — Caltrans

LAST REVISION DATE PLOTTED => 19-AUG-2015
TIME PLOTTED => 12:30

NOTES:

1. FOR ACCURATE RIGHT OF WAY DATA, CONTACT RIGHT OF WAY ENGINEERING AT THE DISTRICT OFFICE.
2. DIMENSION AND STATION LINES REFERENCE CENTER OF POLES, AND/OR POLE FOUNDATIONS.

Dist	COUNTY	ROUTE	POST MILES TOTAL PROJECT	SHEET No.	TOTAL SHEETS
04	Ala	880	2.9/27.3	811	906

6/22/15
REGISTERED ELECTRICAL ENGINEER DATE

6-22-15
PLANS APPROVAL DATE

REGISTERED PROFESSIONAL ENGINEER
KEVIN AGUIGUI
No. 19880
Exp. 3/31/16
ELECTRICAL
STATE OF CALIFORNIA

THE STATE OF CALIFORNIA OR ITS OFFICERS OR AGENTS SHALL NOT BE RESPONSIBLE FOR THE ACCURACY OR COMPLETENESS OF SCANNED COPIES OF THIS PLAN SHEET.

KIMLEY-HORN AND ASSOC.
1300 CLAY STREET
SUITE 325
OAKLAND, CA 94612

BAY AREA INFRASTRUCTURE FINANCING AUTHORITY
101 EIGHTH ST, 3rd FLOOR
OAKLAND, CA 94607

SAN LORENZO

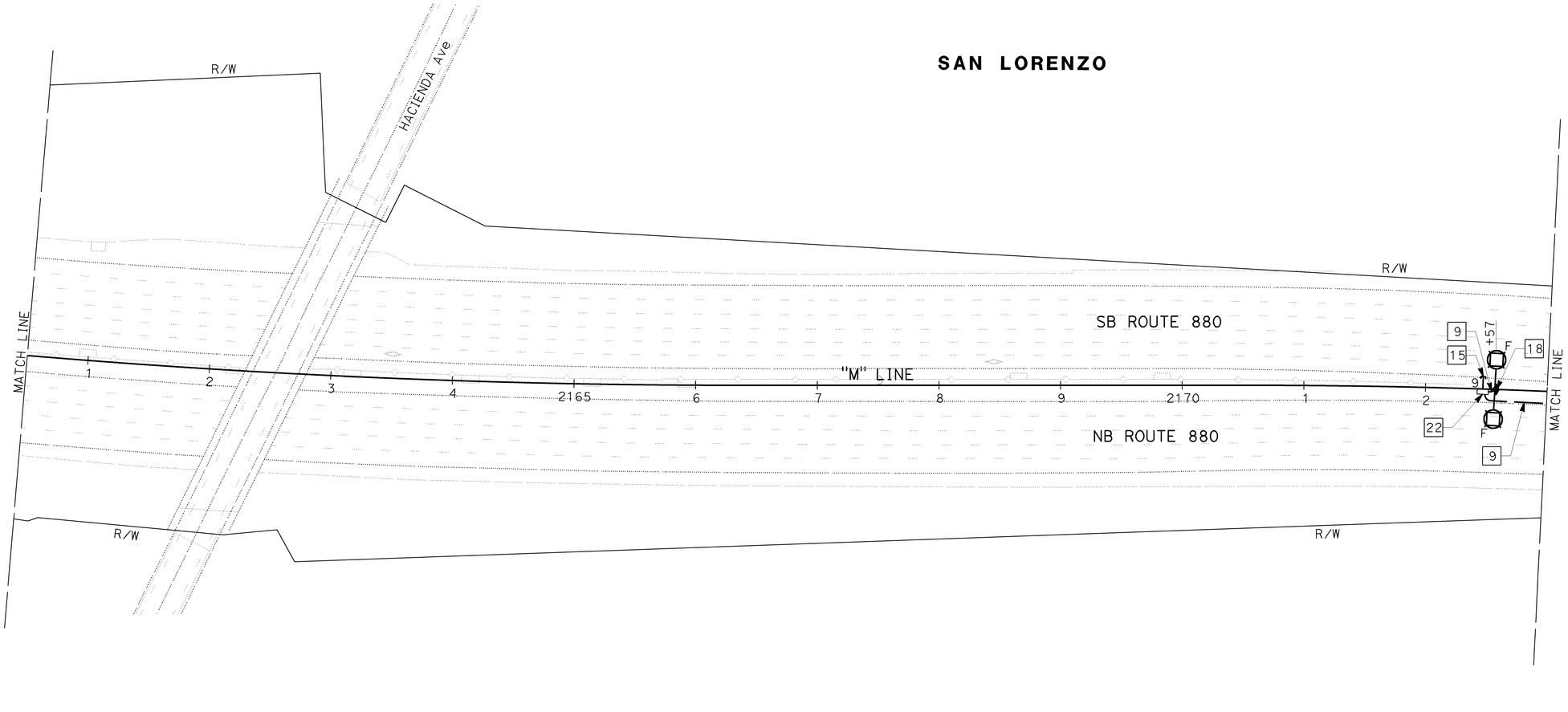

TOLLING SYSTEM INFRASTRUCTURE

SCALE: 1" = 50'

FOR NOTES, ABBREVIATIONS, AND LEGEND, SEE SHEET E-115

APPROVED FOR ELECTRICAL WORK ONLY

E-170

REVISED BY	DATE REVISED
VP	6/22/15

VASAVI PANNALA
RANDAL DURRENBERGER
KEVIN AGUIGUI

CALCULATED-DESIGNED BY
CHECKED BY
CONSULTANT FUNCTIONAL SUPERVISOR

STATE OF CALIFORNIA - DEPARTMENT OF TRANSPORTATION
Caltrans

LAST REVISION 06-22-15
DATE PLOTTED => 19-AUG-2015
TIME PLOTTED => 12:30

BORDER LAST REVISED 7/2/2010
USERNAME => s126849
DGN FILE => 0414000421ua170.dgn
RELATIVE BORDER SCALE IS IN INCHES 0 1 2 3
UNIT 0727
PROJECT NUMBER & PHASE 04140004211

Dist	COUNTY	ROUTE	POST MILES TOTAL PROJECT	SHEET No.	TOTAL SHEETS
04	Ala	880	2.9/27.3	812	906

REGISTERED ELECTRICAL ENGINEER — DATE 6/22/15

PLANS APPROVAL DATE 6-22-15

REGISTERED PROFESSIONAL ENGINEER — KEVIN AGUIGUI — No. 19880 — Exp. 3/31/16 — ELECTRICAL — STATE OF CALIFORNIA

THE STATE OF CALIFORNIA OR ITS OFFICERS OR AGENTS SHALL NOT BE RESPONSIBLE FOR THE ACCURACY OR COMPLETENESS OF SCANNED COPIES OF THIS PLAN SHEET.

KIMLEY-HORN AND ASSOC.
1300 CLAY STREET
SUITE 325
OAKLAND, CA 94612

BAY AREA INFRASTRUCTURE FINANCING AUTHORITY
101 EIGHTH ST, 3rd FLOOR
OAKLAND, CA 94607

NOTES:

1. FOR ACCURATE RIGHT OF WAY DATA, CONTACT RIGHT OF WAY ENGINEERING AT THE DISTRICT OFFICE.
2. DIMENSION AND STATION LINES REFERENCE CENTER OF POLES, AND/OR POLE FOUNDATIONS.

SAN LORENZO

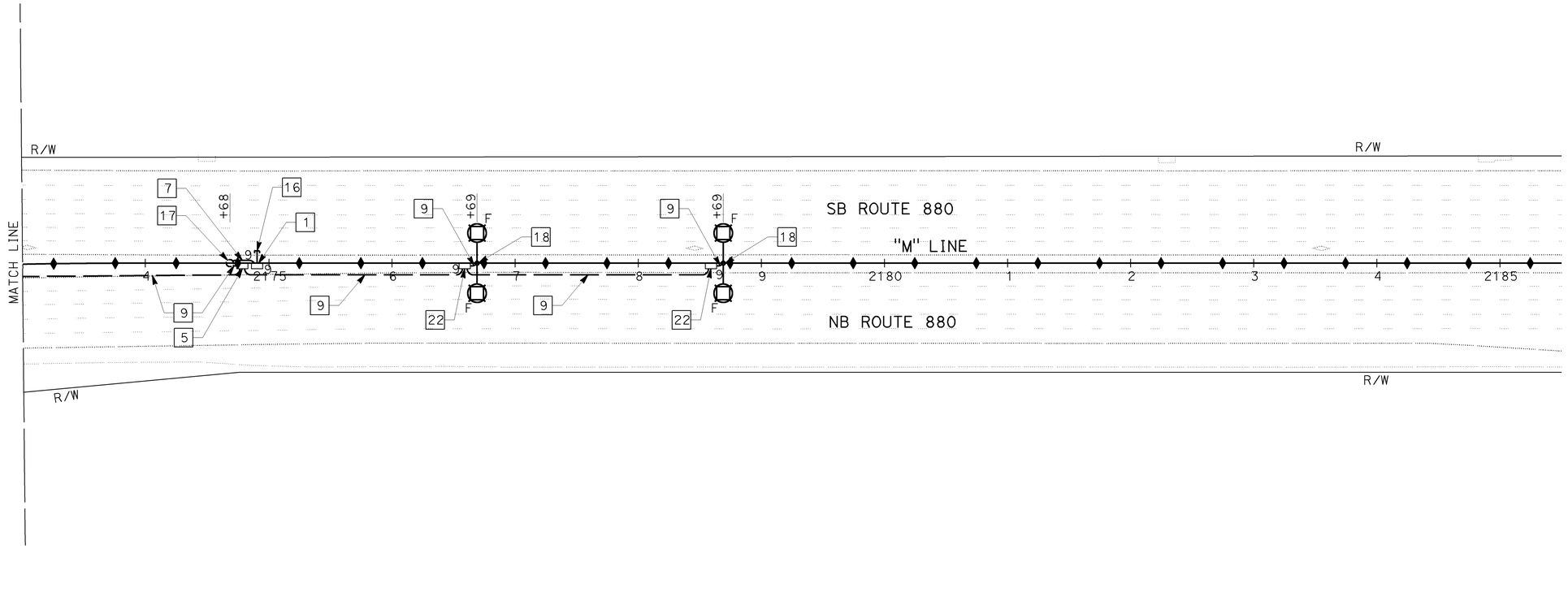

FOR NOTES, ABBREVIATIONS, AND LEGEND, SEE SHEET E-115

APPROVED FOR ELECTRICAL WORK ONLY

TOLLING SYSTEM INFRASTRUCTURE

SCALE: 1" = 50'

E-171

STATE OF CALIFORNIA - DEPARTMENT OF TRANSPORTATION — Caltrans®

CONSULTANT FUNCTIONAL SUPERVISOR: KEVIN AGUIGUI

CALCULATED-DESIGNED BY: VASAVI PANNALA
CHECKED BY: RANDAL DURRENBERGER
REVISED BY: VP
DATE REVISED: 6/22/15

LAST REVISION — DATE PLOTTED => 19-AUG-2015 — TIME PLOTTED => 12:31 — 06-22-15

BORDER LAST REVISED 7/2/2010

USERNAME => s126849
DGN FILE => 04140004211ua171.dgn

RELATIVE BORDER SCALE IS IN INCHES 0 1 2 3

UNIT 0727

PROJECT NUMBER & PHASE 04140004211

Dist	COUNTY	ROUTE	POST MILES TOTAL PROJECT	SHEET No.	TOTAL SHEETS
04	Ala	880	2.9/27.3	813	906

REGISTERED ELECTRICAL ENGINEER 6/22/15 DATE

6-22-15
PLANS APPROVAL DATE

REGISTERED PROFESSIONAL ENGINEER KEVIN AGUIGUI No. 19880 Exp. 3/31/16 ELECTRICAL STATE OF CALIFORNIA

THE STATE OF CALIFORNIA OR ITS OFFICERS OR AGENTS SHALL NOT BE RESPONSIBLE FOR THE ACCURACY OR COMPLETENESS OF SCANNED COPIES OF THIS PLAN SHEET.

KIMLEY-HORN AND ASSOC.
1300 CLAY STREET
SUITE 325
OAKLAND, CA 94612

BAY AREA INFRASTRUCTURE FINANCING AUTHORITY
101 EIGHTH ST, 3rd FLOOR
OAKLAND, CA 94607

NOTES:

1. FOR ACCURATE RIGHT OF WAY DATA, CONTACT RIGHT OF WAY ENGINEERING AT THE DISTRICT OFFICE.
2. DIMENSION AND STATION LINES REFERENCE CENTER OF POLES, AND/OR POLE FOUNDATIONS.

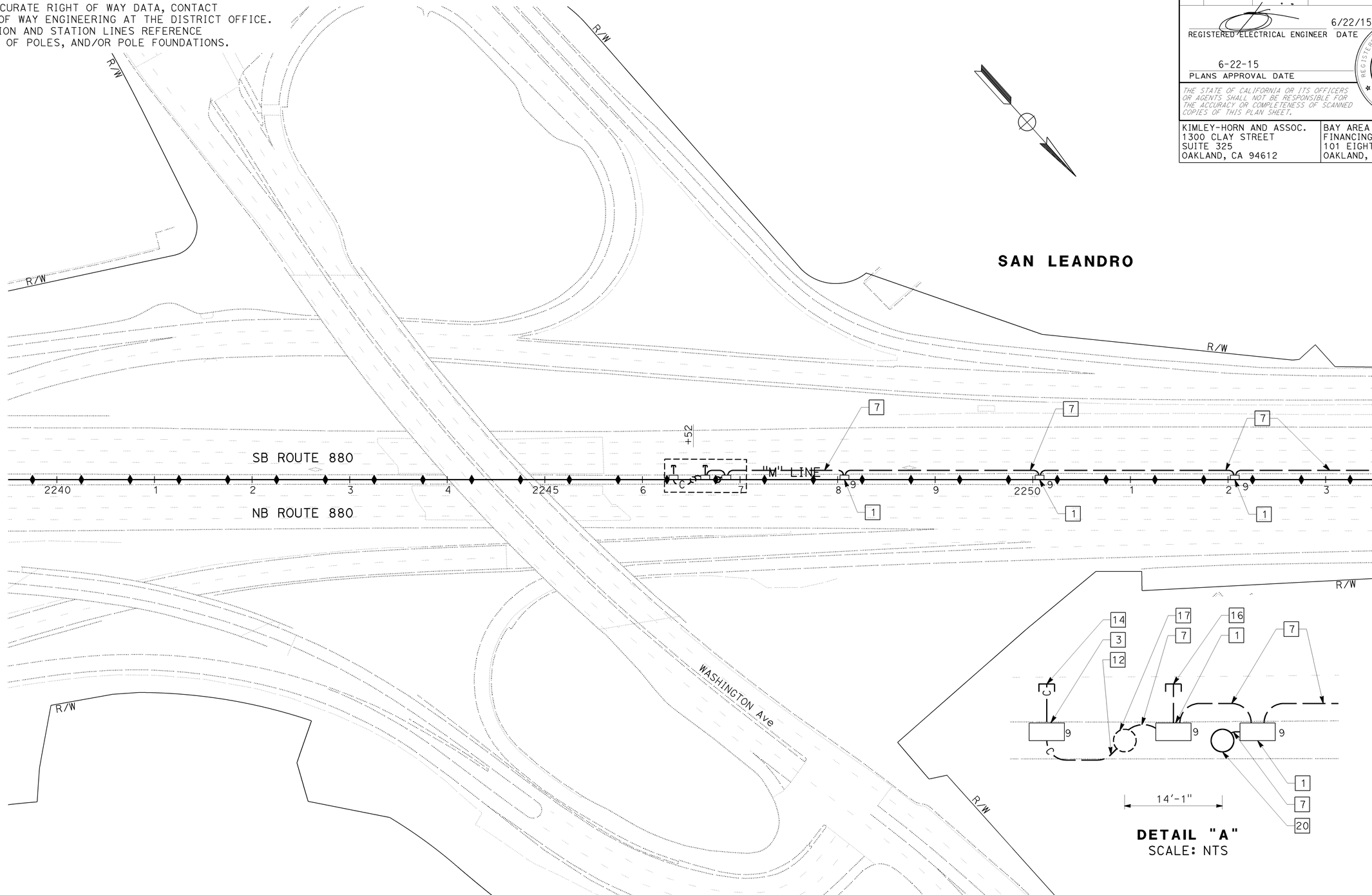

DETAIL "A"
SCALE: NTS

TOLLING SYSTEM INFRASTRUCTURE

SCALE: 1" = 50'

FOR NOTES, ABBREVIATIONS, AND LEGEND, SEE SHEET E-115

APPROVED FOR ELECTRICAL WORK ONLY

E-172

STATE OF CALIFORNIA - DEPARTMENT OF TRANSPORTATION
Caltrans

CONSULTANT FUNCTIONAL SUPERVISOR: KEVIN AGUIGUI
CALCULATED-DESIGNED BY: VASAVI PANNALA
CHECKED BY: RANDAL DURRENBERGER
REVISED BY: VP
DATE REVISED: 6/22/15

LAST REVISION 06-22-15
DATE PLOTTED => 19-AUG-2015
TIME PLOTTED => 12:31

NOTES:

1. FOR ACCURATE RIGHT OF WAY DATA, CONTACT RIGHT OF WAY ENGINEERING AT THE DISTRICT OFFICE.
2. DIMENSION AND STATION LINES REFERENCE CENTER OF POLES, AND/OR POLE FOUNDATIONS.

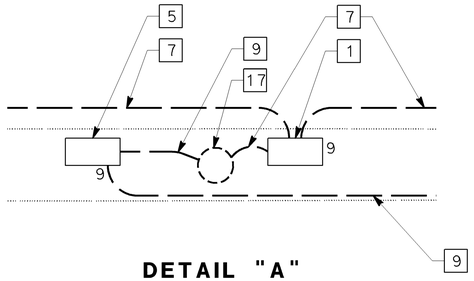

DETAIL "A"
SCALE: NTS

Dist	COUNTY	ROUTE	POST MILES TOTAL PROJECT	SHEET No.	TOTAL SHEETS
04	Ala	880	2.9/27.3	814	906

6/22/15
REGISTERED ELECTRICAL ENGINEER DATE

6-22-15
PLANS APPROVAL DATE

REGISTERED PROFESSIONAL ENGINEER
KEVIN AGUIGUI
No. 19880
Exp. 3/31/16
ELECTRICAL
STATE OF CALIFORNIA

THE STATE OF CALIFORNIA OR ITS OFFICERS OR AGENTS SHALL NOT BE RESPONSIBLE FOR THE ACCURACY OR COMPLETENESS OF SCANNED COPIES OF THIS PLAN SHEET.

KIMLEY-HORN AND ASSOC.
1300 CLAY STREET
SUITE 325
OAKLAND, CA 94612

BAY AREA INFRASTRUCTURE FINANCING AUTHORITY
101 EIGHTH ST, 3rd FLOOR
OAKLAND, CA 94607

SAN LEANDRO

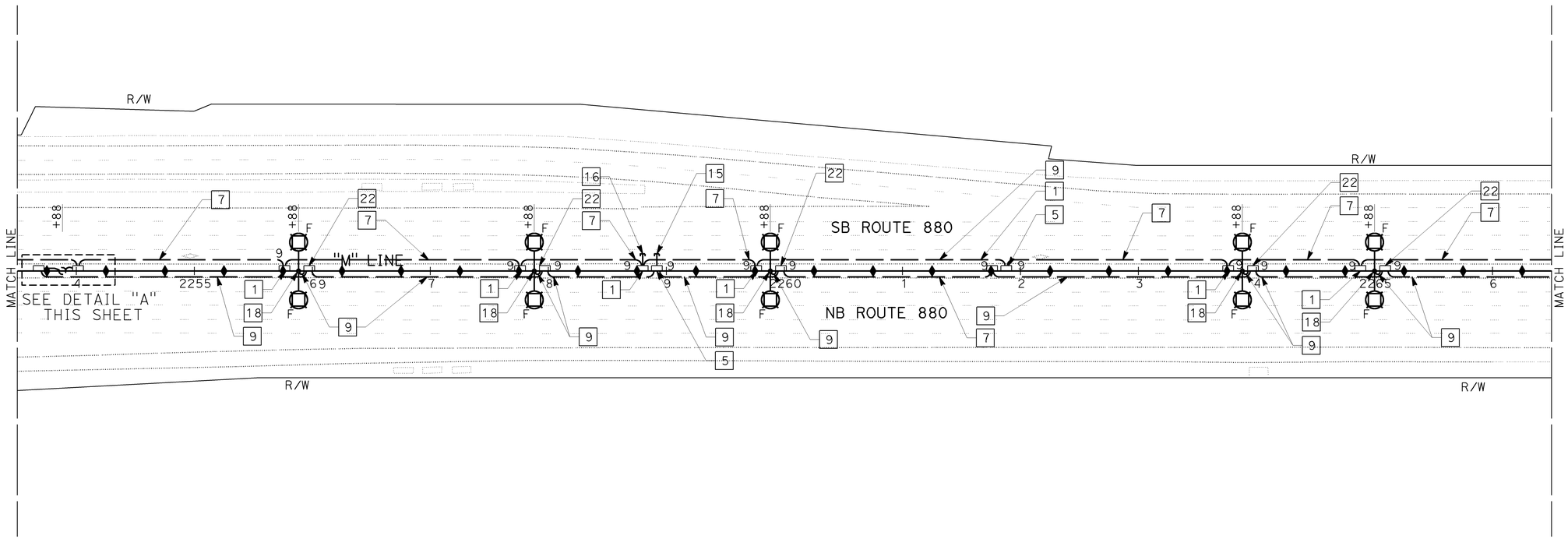

TOLLING SYSTEM INFRASTRUCTURE

SCALE: 1" = 50'

FOR NOTES, ABBREVIATIONS, AND LEGEND, SEE SHEET E-115

APPROVED FOR ELECTRICAL WORK ONLY

E-173

	REVISED BY	DATE REVISED
	VP	6/22/15

VASAVI PANNALA — CALCULATED-DESIGNED BY
RANDAL DURRENBERGER — CHECKED BY
KEVIN AGUIGUI — CONSULTANT FUNCTIONAL SUPERVISOR

STATE OF CALIFORNIA - DEPARTMENT OF TRANSPORTATION
Caltrans

LAST REVISION DATE PLOTTED => 19-AUG-2015
06-22-15 TIME PLOTTED => 12:31

BORDER LAST REVISED 7/2/2010
USERNAME => s126849
DGN FILE => 04140004211ua173.dgn
RELATIVE BORDER SCALE IS IN INCHES 0 1 2 3
UNIT 0727
PROJECT NUMBER & PHASE 04140004211

NOTES:

1. FOR ACCURATE RIGHT OF WAY DATA, CONTACT RIGHT OF WAY ENGINEERING AT THE DISTRICT OFFICE.
2. DIMENSION AND STATION LINES REFERENCE CENTER OF POLES, AND/OR POLE FOUNDATIONS.

Dist	COUNTY	ROUTE	POST MILES TOTAL PROJECT	SHEET No.	TOTAL SHEETS
04	Ala	880	2.9/27.3	815	906

REGISTERED ELECTRICAL ENGINEER 6/22/15 DATE

6-22-15
PLANS APPROVAL DATE

REGISTERED PROFESSIONAL ENGINEER KEVIN AGUIGUI No. 19880 Exp. 3/31/16 ELECTRICAL STATE OF CALIFORNIA

THE STATE OF CALIFORNIA OR ITS OFFICERS OR AGENTS SHALL NOT BE RESPONSIBLE FOR THE ACCURACY OR COMPLETENESS OF SCANNED COPIES OF THIS PLAN SHEET.

KIMLEY-HORN AND ASSOC.
1300 CLAY STREET
SUITE 325
OAKLAND, CA 94612

BAY AREA INFRASTRUCTURE FINANCING AUTHORITY
101 EIGHTH ST, 3rd FLOOR
OAKLAND, CA 94607

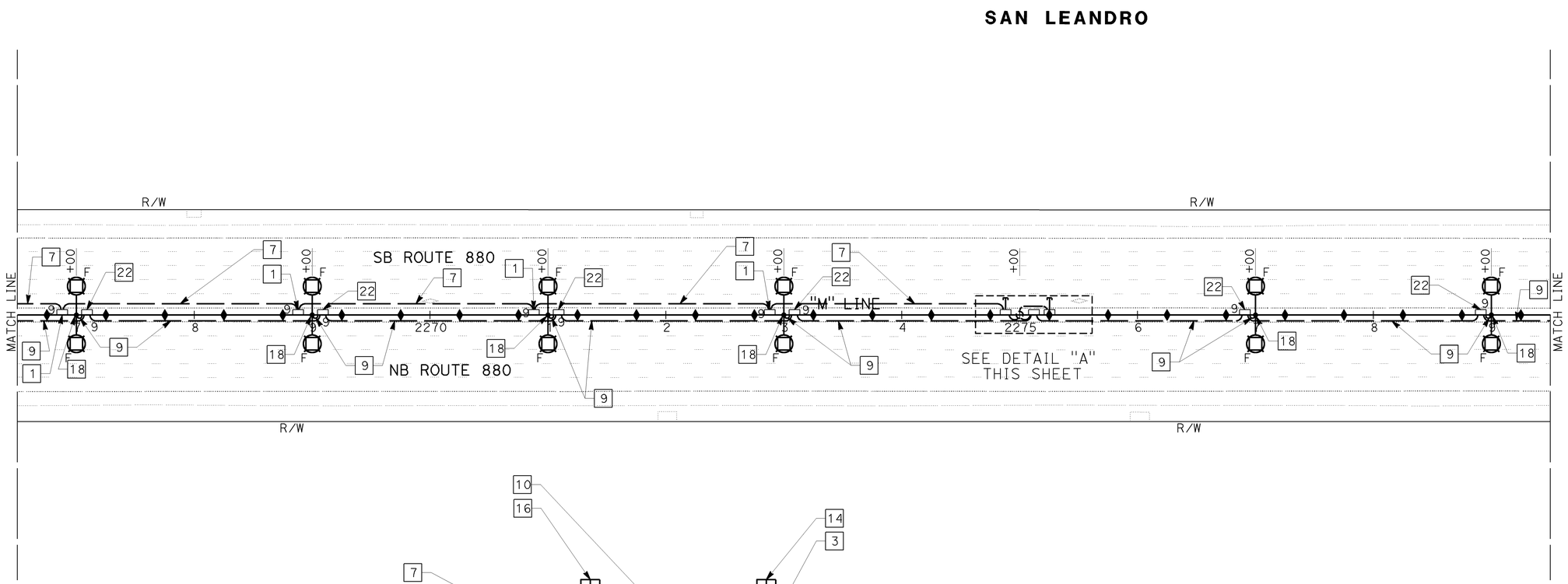

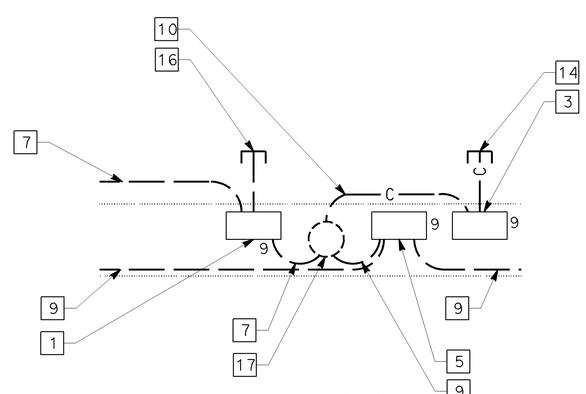

DETAIL "A"
SCALE: NTS

TOLLING SYSTEM INFRASTRUCTURE

SCALE: 1" = 50'

FOR NOTES, ABBREVIATIONS, AND LEGEND, SEE SHEET E-115

APPROVED FOR ELECTRICAL WORK ONLY

E-174

STATE OF CALIFORNIA - DEPARTMENT OF TRANSPORTATION
Caltrans

CONSULTANT FUNCTIONAL SUPERVISOR: KEVIN AGUIGUI
CALCULATED-DESIGNED BY: VASAVI PANNALA
CHECKED BY: RANDAL DURRENBERGER
REVISED BY: VP
DATE REVISED: 6/22/15

LAST REVISION 06-22-15
DATE PLOTTED => 19-AUG-2015
TIME PLOTTED => 12:31

NOTES:

1. FOR ACCURATE RIGHT OF WAY DATA, CONTACT RIGHT OF WAY ENGINEERING AT THE DISTRICT OFFICE.
2. DIMENSION AND STATION LINES REFERENCE CENTER OF POLES, AND/OR POLE FOUNDATIONS.

Dist	COUNTY	ROUTE	POST MILES TOTAL PROJECT	SHEET No.	TOTAL SHEETS
04	Ala	880	2.9/27.3	816	906

REGISTERED ELECTRICAL ENGINEER — DATE 6/22/15

KEVIN AGUIGUI No. 19880 Exp. 3/31/16 ELECTRICAL — REGISTERED PROFESSIONAL ENGINEER — STATE OF CALIFORNIA

PLANS APPROVAL DATE 6-22-15

THE STATE OF CALIFORNIA OR ITS OFFICERS OR AGENTS SHALL NOT BE RESPONSIBLE FOR THE ACCURACY OR COMPLETENESS OF SCANNED COPIES OF THIS PLAN SHEET.

KIMLEY-HORN AND ASSOC.
1300 CLAY STREET
SUITE 325
OAKLAND, CA 94612

BAY AREA INFRASTRUCTURE FINANCING AUTHORITY
101 EIGHTH ST, 3rd FLOOR
OAKLAND, CA 94607

SAN LEANDRO

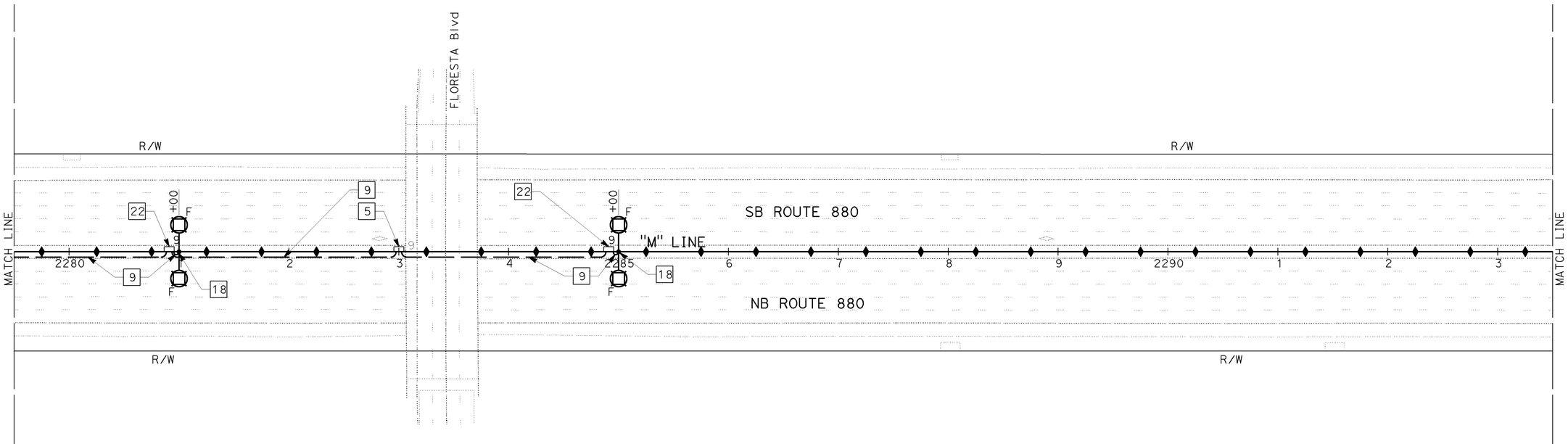

FOR NOTES, ABBREVIATIONS, AND LEGEND, SEE SHEET E-115

APPROVED FOR ELECTRICAL WORK ONLY

TOLLING SYSTEM INFRASTRUCTURE

SCALE: 1" = 50'

E-175

	REVISED BY	DATE REVISED
	VP	6/22/15

VASAVI PANNALA — CALCULATED-DESIGNED BY
RANDAL DURRENBERGER — CHECKED BY
KEVIN AGUIGUI — CONSULTANT FUNCTIONAL SUPERVISOR

STATE OF CALIFORNIA - DEPARTMENT OF TRANSPORTATION
Caltrans

LAST REVISION 06-22-15
DATE PLOTTED => 19-AUG-2015
TIME PLOTTED => 12:31

BORDER LAST REVISED 7/2/2010

USERNAME => s126849
DGN FILE => 0414000421ua175.dgn

RELATIVE BORDER SCALE IS IN INCHES 0 1 2 3

UNIT 0727

PROJECT NUMBER & PHASE 04140004211

NOTES:

1. FOR ACCURATE RIGHT OF WAY DATA, CONTACT RIGHT OF WAY ENGINEERING AT THE DISTRICT OFFICE.
2. DIMENSION AND STATION LINES REFERENCE CENTER OF POLES, AND/OR POLE FOUNDATIONS.

Dist	COUNTY	ROUTE	POST MILES TOTAL PROJECT	SHEET No.	TOTAL SHEETS
04	Ala	880	2.9/27.3	817	906

6/22/15
REGISTERED ELECTRICAL ENGINEER DATE

6-22-15
PLANS APPROVAL DATE

REGISTERED PROFESSIONAL ENGINEER
KEVIN AGUIGUI
No. 19880
Exp. 3/31/16
ELECTRICAL
STATE OF CALIFORNIA

THE STATE OF CALIFORNIA OR ITS OFFICERS OR AGENTS SHALL NOT BE RESPONSIBLE FOR THE ACCURACY OR COMPLETENESS OF SCANNED COPIES OF THIS PLAN SHEET.

KIMLEY-HORN AND ASSOC.
1300 CLAY STREET
SUITE 325
OAKLAND, CA 94612

BAY AREA INFRASTRUCTURE FINANCING AUTHORITY
101 EIGHTH ST, 3rd FLOOR
OAKLAND, CA 94607

SAN LEANDRO

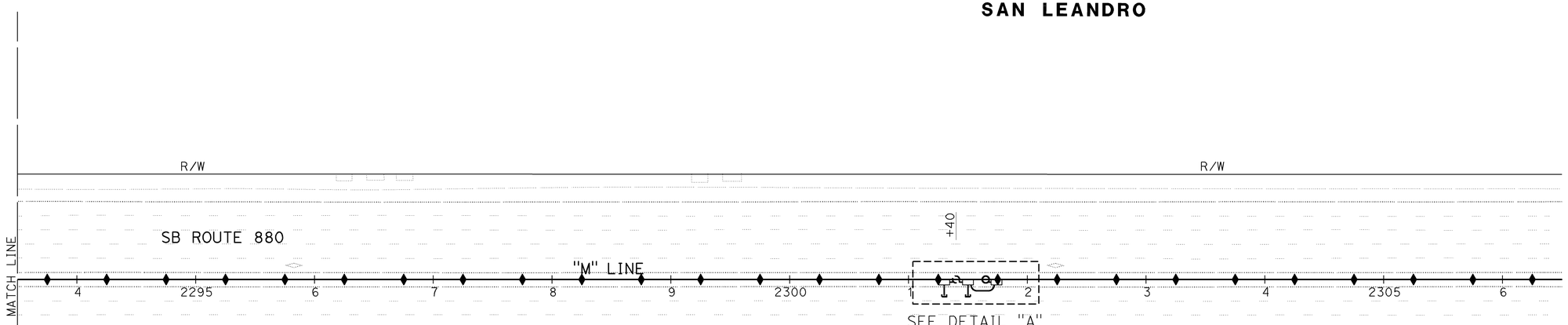

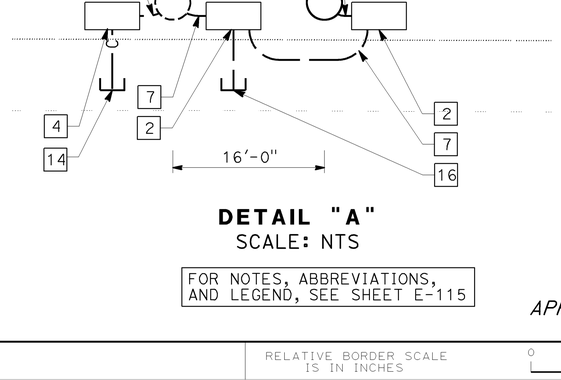

DETAIL "A"
SCALE: NTS

FOR NOTES, ABBREVIATIONS, AND LEGEND, SEE SHEET E-115

APPROVED FOR ELECTRICAL WORK ONLY

TOLLING SYSTEM INFRASTRUCTURE

SCALE: 1" = 50'

E-176

STATE OF CALIFORNIA - DEPARTMENT OF TRANSPORTATION
Caltrans
CONSULTANT FUNCTIONAL SUPERVISOR: KEVIN AGUIGUI
CALCULATED-DESIGNED BY: VASAVI PANNALA
CHECKED BY: RANDAL DURRENBERGER
REVISED BY: VP
DATE REVISED: 6/22/15

LAST REVISION DATE PLOTTED => 19-AUG-2015
TIME PLOTTED => 12:31

NOTES:

1. FOR ACCURATE RIGHT OF WAY DATA, CONTACT RIGHT OF WAY ENGINEERING AT THE DISTRICT OFFICE.
2. DIMENSION AND STATION LINES REFERENCE CENTER OF POLES, AND/OR POLE FOUNDATIONS.

Dist	COUNTY	ROUTE	POST MILES TOTAL PROJECT	SHEET No.	TOTAL SHEETS
04	Ala	880	2.9/27.3	818	906

6/22/15
REGISTERED ELECTRICAL ENGINEER DATE

6-22-15
PLANS APPROVAL DATE

REGISTERED PROFESSIONAL ENGINEER
KEVIN AGUIGUI
No. 19880
Exp. 3/31/16
ELECTRICAL
STATE OF CALIFORNIA

THE STATE OF CALIFORNIA OR ITS OFFICERS OR AGENTS SHALL NOT BE RESPONSIBLE FOR THE ACCURACY OR COMPLETENESS OF SCANNED COPIES OF THIS PLAN SHEET.

KIMLEY-HORN AND ASSOC.
1300 CLAY STREET
SUITE 325
OAKLAND, CA 94612

BAY AREA INFRASTRUCTURE FINANCING AUTHORITY
101 EIGHTH ST, 3rd FLOOR
OAKLAND, CA 94607

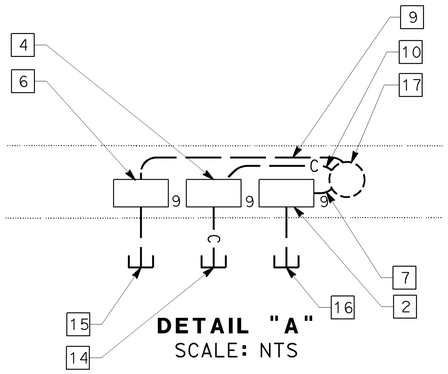

DETAIL "A"
SCALE: NTS

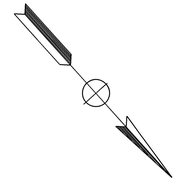

SAN LEANDRO

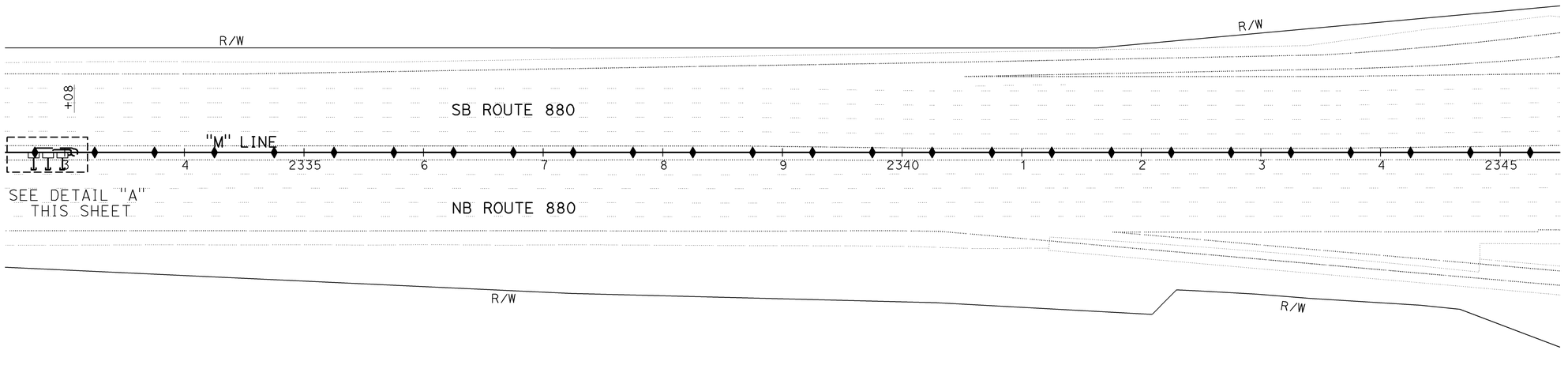

FOR NOTES, ABBREVIATIONS, AND LEGEND, SEE SHEET E-115

APPROVED FOR ELECTRICAL WORK ONLY

TOLLING SYSTEM INFRASTRUCTURE

SCALE: 1" = 50'

E-177

VP | 6/22/15
REVISED BY | DATE REVISED
VASAVI PANNALA | RANDAL DURRENBERGER
CALCULATED-DESIGNED BY | CHECKED BY
CONSULTANT FUNCTIONAL SUPERVISOR: KEVIN AGUIGUI
STATE OF CALIFORNIA - DEPARTMENT OF TRANSPORTATION
Caltrans

LAST REVISION | DATE PLOTTED => 19-AUG-2015
TIME PLOTTED => 12:32

BORDER LAST REVISED 7/2/2010
USERNAME => s126849
DGN FILE => 04140004211ua177.dgn
RELATIVE BORDER SCALE IS IN INCHES 0 1 2 3
UNIT 0727
PROJECT NUMBER & PHASE 04140004211

NOTES:

1. FOR ACCURATE RIGHT OF WAY DATA, CONTACT RIGHT OF WAY ENGINEERING AT THE DISTRICT OFFICE.
2. DIMENSION AND STATION LINES REFERENCE CENTER OF POLES, AND/OR POLE FOUNDATIONS.

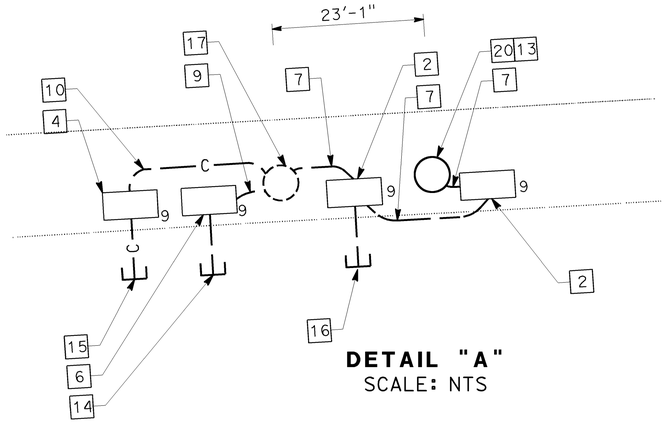

DETAIL "A"
SCALE: NTS

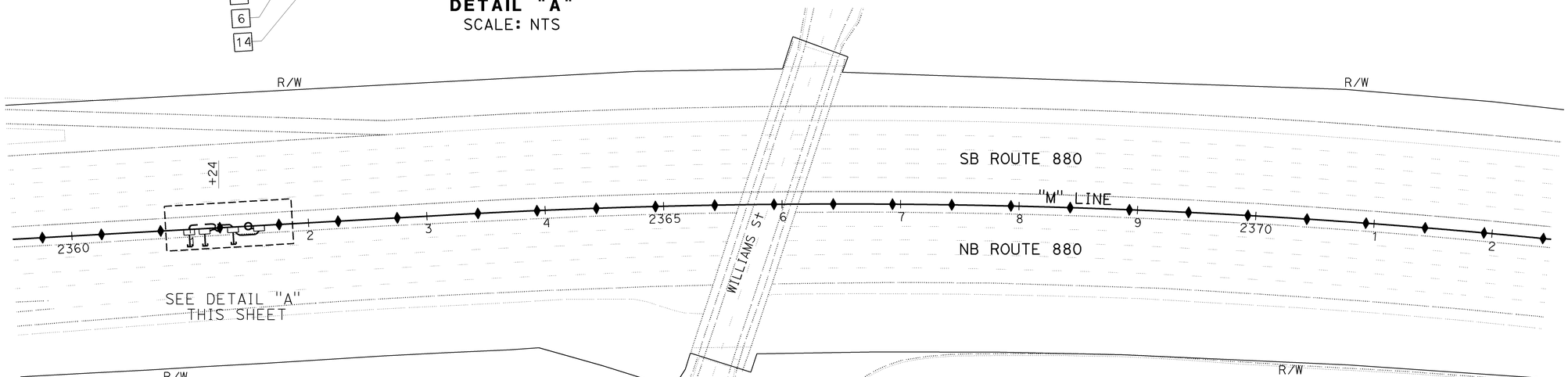

SAN LEANDRO

Dist	COUNTY	ROUTE	POST MILES TOTAL PROJECT	SHEET No.	TOTAL SHEETS
04	Ala	880	2.9/27.3	819	906

6/22/15
REGISTERED ELECTRICAL ENGINEER DATE

6-22-15
PLANS APPROVAL DATE

REGISTERED PROFESSIONAL ENGINEER
KEVIN AGUIGUI
No. 19880
Exp. 3/31/16
ELECTRICAL
STATE OF CALIFORNIA

THE STATE OF CALIFORNIA OR ITS OFFICERS OR AGENTS SHALL NOT BE RESPONSIBLE FOR THE ACCURACY OR COMPLETENESS OF SCANNED COPIES OF THIS PLAN SHEET.

KIMLEY-HORN AND ASSOC.
1300 CLAY STREET
SUITE 325
OAKLAND, CA 94612

BAY AREA INFRASTRUCTURE FINANCING AUTHORITY
101 EIGHTH ST, 3rd FLOOR
OAKLAND, CA 94607

FOR NOTES, ABBREVIATIONS, AND LEGEND, SEE SHEET E-115

APPROVED FOR ELECTRICAL WORK ONLY

TOLLING SYSTEM INFRASTRUCTURE

SCALE: 1" = 50'

E-178

REVISED BY	DATE REVISED
VP	6/22/15

VASAVI PANNALA
RANDAL DURRENBERGER
CALCULATED-DESIGNED BY
CHECKED BY
CONSULTANT FUNCTIONAL SUPERVISOR
KEVIN AGUIGUI
STATE OF CALIFORNIA - DEPARTMENT OF TRANSPORTATION
Caltrans

LAST REVISION 06-22-15
DATE PLOTTED => 19-AUG-2015
TIME PLOTTED => 12:32

NOTES:

1. FOR ACCURATE RIGHT OF WAY DATA, CONTACT RIGHT OF WAY ENGINEERING AT THE DISTRICT OFFICE.
2. DIMENSION AND STATION LINES REFERENCE CENTER OF POLES, AND/OR POLE FOUNDATIONS.

Dist	COUNTY	ROUTE	POST MILES TOTAL PROJECT	SHEET No.	TOTAL SHEETS
04	Ala	880	2.9/27.3	820	906

6/22/15
REGISTERED ELECTRICAL ENGINEER DATE

6-22-15
PLANS APPROVAL DATE

REGISTERED PROFESSIONAL ENGINEER
KEVIN AGUIGUI
No. 19880
Exp. 3/31/16
ELECTRICAL
STATE OF CALIFORNIA

THE STATE OF CALIFORNIA OR ITS OFFICERS OR AGENTS SHALL NOT BE RESPONSIBLE FOR THE ACCURACY OR COMPLETENESS OF SCANNED COPIES OF THIS PLAN SHEET.

KIMLEY-HORN AND ASSOC.
1300 CLAY STREET
SUITE 325
OAKLAND, CA 94612

BAY AREA INFRASTRUCTURE FINANCING AUTHORITY
101 EIGHTH ST, 3rd FLOOR
OAKLAND, CA 94607

OAKLAND

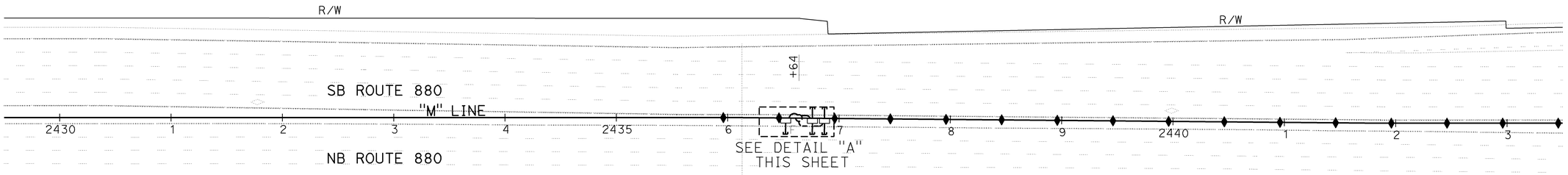

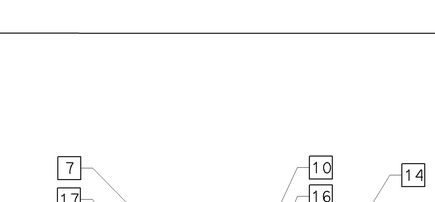

DETAIL "A"
SCALE: NTS

FOR NOTES, ABBREVIATIONS, AND LEGEND, SEE SHEET E-115

APPROVED FOR ELECTRICAL WORK ONLY

TOLLING SYSTEM INFRASTRUCTURE

SCALE: 1" = 50'

E-179

CALCULATED-DESIGNED BY			
CHECKED BY			
DR			
CONSULTANT FUNCTIONAL SUPERVISOR	KEVIN AGUIGUI		
STATE OF CALIFORNIA - DEPARTMENT OF TRANSPORTATION	VASAVI PANNALA	REVISED BY	VP
Caltrans	RANDAL DURRENBERGER	DATE REVISED	6/22/15

LAST REVISION 06-22-15
DATE PLOTTED => 19-AUG-2015
TIME PLOTTED => 12:32

NOTES:

1. FOR ACCURATE RIGHT OF WAY DATA, CONTACT RIGHT OF WAY ENGINEERING AT THE DISTRICT OFFICE.
2. DIMENSION AND STATION LINES REFERENCE CENTER OF POLES, AND/OR POLE FOUNDATIONS.

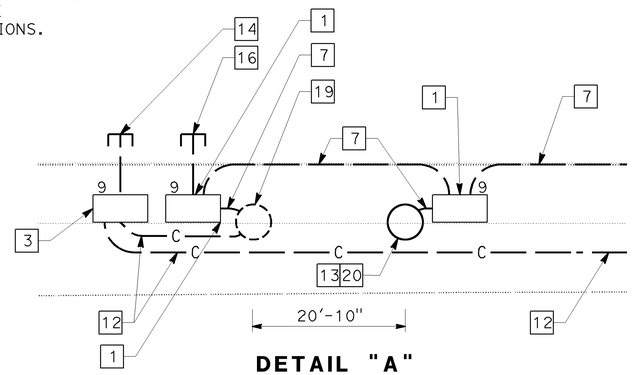

DETAIL "A"
SCALE: NTS

Dist	COUNTY	ROUTE	POST MILES TOTAL PROJECT	SHEET No.	TOTAL SHEETS
04	Ala	880	2.9/27.3	821	906

6/22/15
REGISTERED ELECTRICAL ENGINEER DATE

KEVIN AGUIGUI No. 19880 Exp. 3/31/16 ELECTRICAL — REGISTERED PROFESSIONAL ENGINEER — STATE OF CALIFORNIA

6-22-15
PLANS APPROVAL DATE

THE STATE OF CALIFORNIA OR ITS OFFICERS OR AGENTS SHALL NOT BE RESPONSIBLE FOR THE ACCURACY OR COMPLETENESS OF SCANNED COPIES OF THIS PLAN SHEET.

KIMLEY-HORN AND ASSOC.
1300 CLAY STREET
SUITE 325
OAKLAND, CA 94612

BAY AREA INFRASTRUCTURE FINANCING AUTHORITY
101 EIGHTH ST, 3rd FLOOR
OAKLAND, CA 94607

OAKLAND

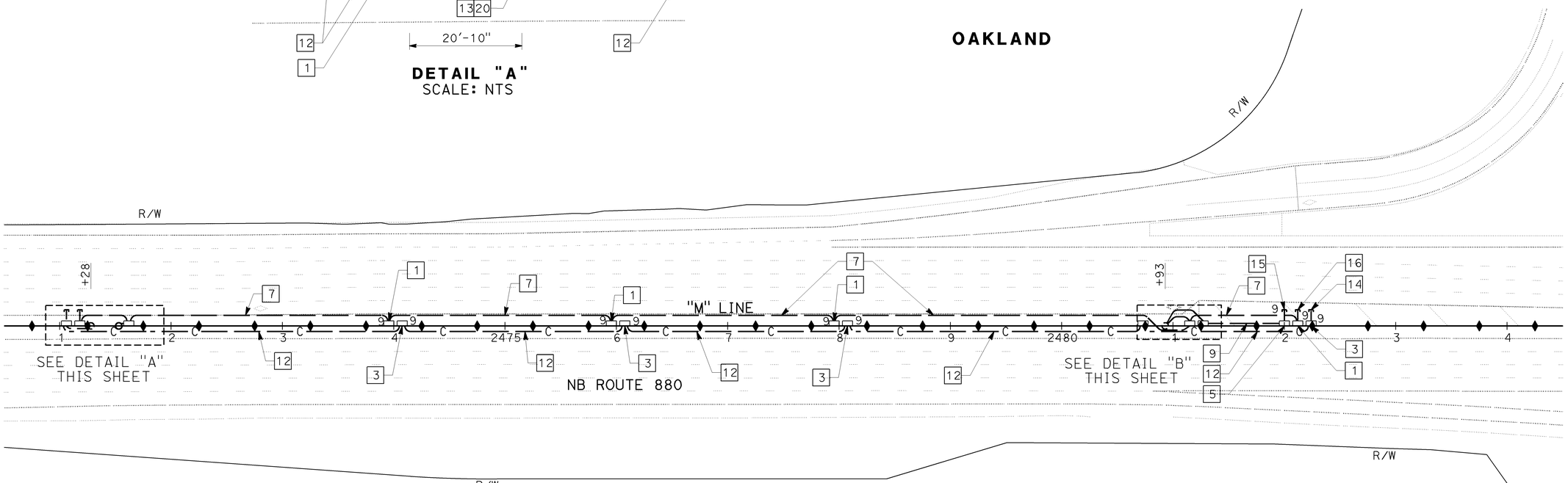

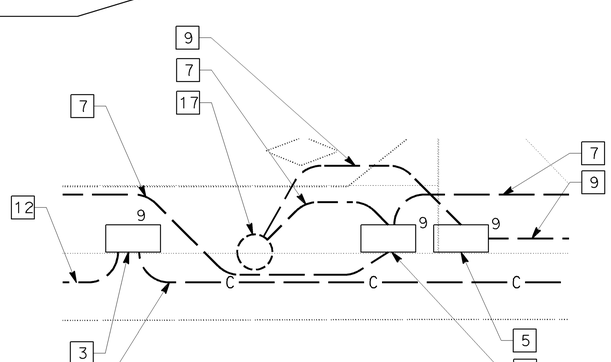

DETAIL "B"
SCALE: NTS

TOLLING SYSTEM INFRASTRUCTURE

SCALE: 1" = 50'

FOR NOTES, ABBREVIATIONS, AND LEGEND, SEE SHEET E-115

APPROVED FOR ELECTRICAL WORK ONLY

E-180

REVISED BY	DATE REVISED
VP	6/22/15
VASAVI PANNALA	
RANDAL DURRENBERGER	

CALCULATED-DESIGNED BY
CHECKED BY
CONSULTANT FUNCTIONAL SUPERVISOR
KEVIN AGUIGUI

STATE OF CALIFORNIA - DEPARTMENT OF TRANSPORTATION
Caltrans

LAST REVISION DATE PLOTTED => 19-AUG-2015
06-22-15 TIME PLOTTED => 12:32

NOTES:

1. FOR ACCURATE RIGHT OF WAY DATA, CONTACT RIGHT OF WAY ENGINEERING AT THE DISTRICT OFFICE.
2. DIMENSION AND STATION LINES REFERENCE CENTER OF POLES, AND/OR POLE FOUNDATIONS.

Dist	COUNTY	ROUTE	POST MILES TOTAL PROJECT	SHEET No.	TOTAL SHEETS
04	Ala	880	2.9/27.3	822	906

REGISTERED ELECTRICAL ENGINEER 6/22/15 DATE

6-22-15
PLANS APPROVAL DATE

REGISTERED PROFESSIONAL ENGINEER KEVIN AGUIGUI No. 19880 Exp. 3/31/16 ELECTRICAL STATE OF CALIFORNIA

THE STATE OF CALIFORNIA OR ITS OFFICERS OR AGENTS SHALL NOT BE RESPONSIBLE FOR THE ACCURACY OR COMPLETENESS OF SCANNED COPIES OF THIS PLAN SHEET.

KIMLEY-HORN AND ASSOC.
1300 CLAY STREET
SUITE 325
OAKLAND, CA 94612

BAY AREA INFRASTRUCTURE FINANCING AUTHORITY
101 EIGHTH ST, 3rd FLOOR
OAKLAND, CA 94607

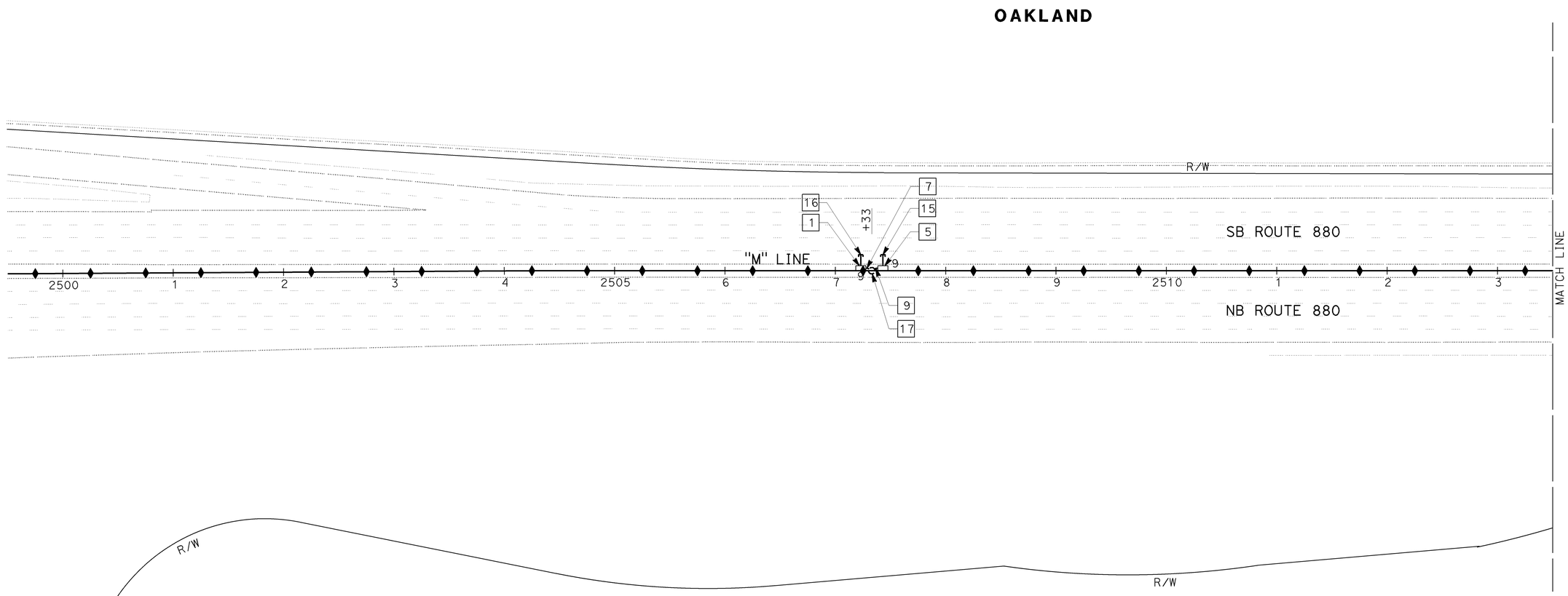

TOLLING SYSTEM INFRASTRUCTURE

SCALE: 1" = 50'

FOR NOTES, ABBREVIATIONS, AND LEGEND, SEE SHEET E-115

APPROVED FOR ELECTRICAL WORK ONLY

E-181

STATE OF CALIFORNIA - DEPARTMENT OF TRANSPORTATION
Caltrans

CONSULTANT FUNCTIONAL SUPERVISOR: KEVIN AGUIGUI
CALCULATED-DESIGNED BY: VASAVI PANNALA
CHECKED BY: RANDAL DURRENBERGER
REVISED BY: VP
DATE REVISED: 6/22/15

LAST REVISION 06-22-15
DATE PLOTTED => 19-AUG-2015
TIME PLOTTED => 12:32

NOTES:

1. FOR ACCURATE RIGHT OF WAY DATA, CONTACT RIGHT OF WAY ENGINEERING AT THE DISTRICT OFFICE.
2. DIMENSION AND STATION LINES REFERENCE CENTER OF POLES, AND/OR POLE FOUNDATIONS.

Dist	COUNTY	ROUTE	POST MILES TOTAL PROJECT	SHEET No.	TOTAL SHEETS
04	Ala	880	2.9/27.3	823	906

REGISTERED ELECTRICAL ENGINEER 6/22/15 DATE

6-22-15
PLANS APPROVAL DATE

REGISTERED PROFESSIONAL ENGINEER KEVIN AGUIGUI No. 19880 Exp. 3/31/16 ELECTRICAL STATE OF CALIFORNIA

THE STATE OF CALIFORNIA OR ITS OFFICERS OR AGENTS SHALL NOT BE RESPONSIBLE FOR THE ACCURACY OR COMPLETENESS OF SCANNED COPIES OF THIS PLAN SHEET.

KIMLEY-HORN AND ASSOC.
1300 CLAY STREET
SUITE 325
OAKLAND, CA 94612

BAY AREA INFRASTRUCTURE FINANCING AUTHORITY
101 EIGHTH ST, 3rd FLOOR
OAKLAND, CA 94607

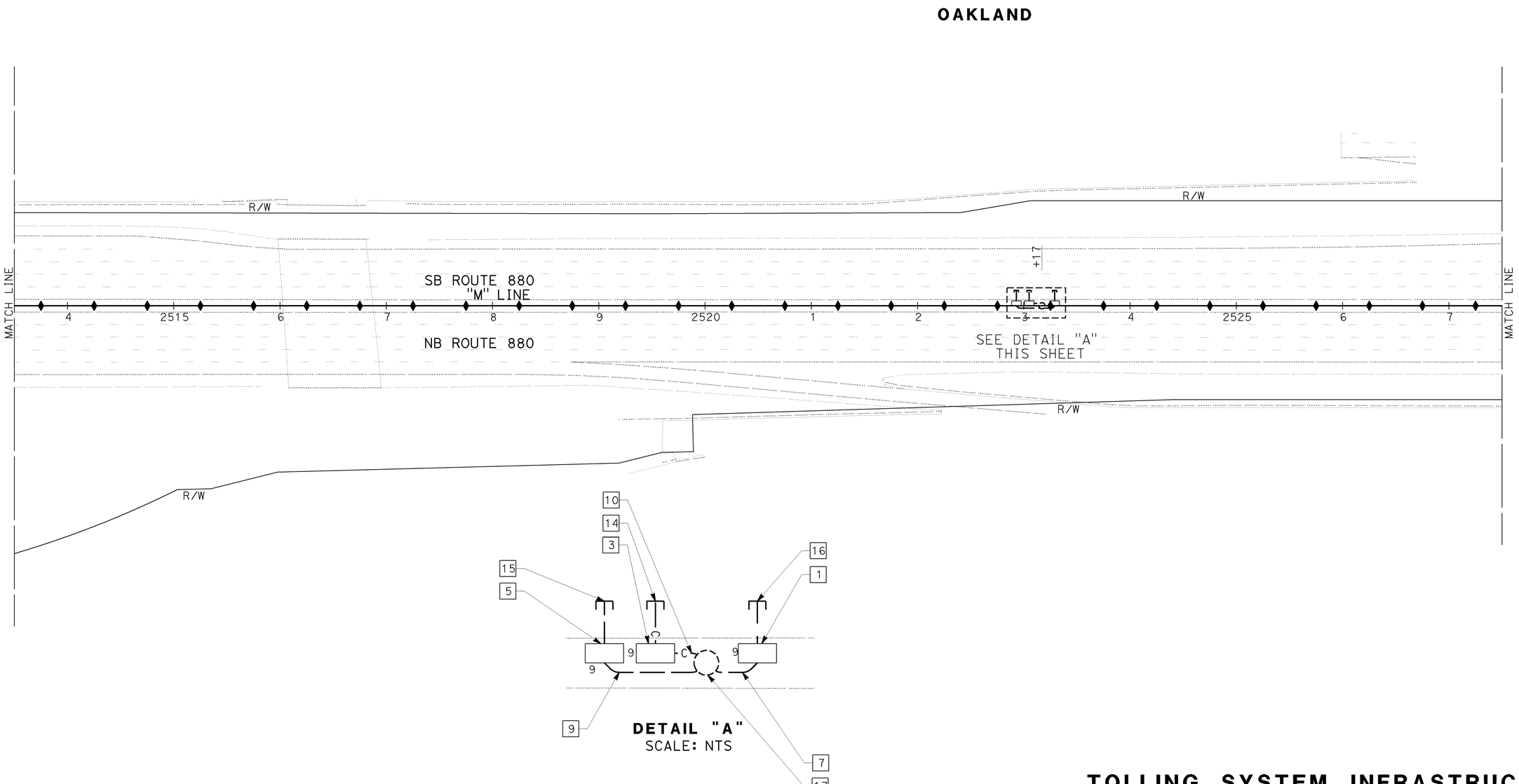

DETAIL "A"
SCALE: NTS

FOR NOTES, ABBREVIATIONS, AND LEGEND, SEE SHEET E-115

APPROVED FOR ELECTRICAL WORK ONLY

TOLLING SYSTEM INFRASTRUCTURE

SCALE: 1" = 50'

E-182

STATE OF CALIFORNIA - DEPARTMENT OF TRANSPORTATION
Caltrans®

CONSULTANT FUNCTIONAL SUPERVISOR: KEVIN AGUIGUI
CALCULATED-DESIGNED BY: VASAVI PANNALA
CHECKED BY: RANDAL DURRENBERGER
REVISED BY: VP
DATE REVISED: 6/22/15

LAST REVISION 06-22-15
DATE PLOTTED => 19-AUG-2015
TIME PLOTTED => 12:33

NOTES:

1. FOR ACCURATE RIGHT OF WAY DATA, CONTACT RIGHT OF WAY ENGINEERING AT THE DISTRICT OFFICE.
2. DIMENSION AND STATION LINES REFERENCE CENTER OF POLES, AND/OR POLE FOUNDATIONS.

Dist	COUNTY	ROUTE	POST MILES TOTAL PROJECT	SHEET No.	TOTAL SHEETS
04	Ala	880	2.9/27.3	824	906

6/22/15
REGISTERED ELECTRICAL ENGINEER DATE

6-22-15
PLANS APPROVAL DATE

REGISTERED PROFESSIONAL ENGINEER
KEVIN AGUIGUI
No. 19880
Exp. 3/31/16
ELECTRICAL
STATE OF CALIFORNIA

THE STATE OF CALIFORNIA OR ITS OFFICERS OR AGENTS SHALL NOT BE RESPONSIBLE FOR THE ACCURACY OR COMPLETENESS OF SCANNED COPIES OF THIS PLAN SHEET.

KIMLEY-HORN AND ASSOC.
1300 CLAY STREET
SUITE 325
OAKLAND, CA 94612

BAY AREA INFRASTRUCTURE FINANCING AUTHORITY
101 EIGHTH ST, 3rd FLOOR
OAKLAND, CA 94607

OAKLAND

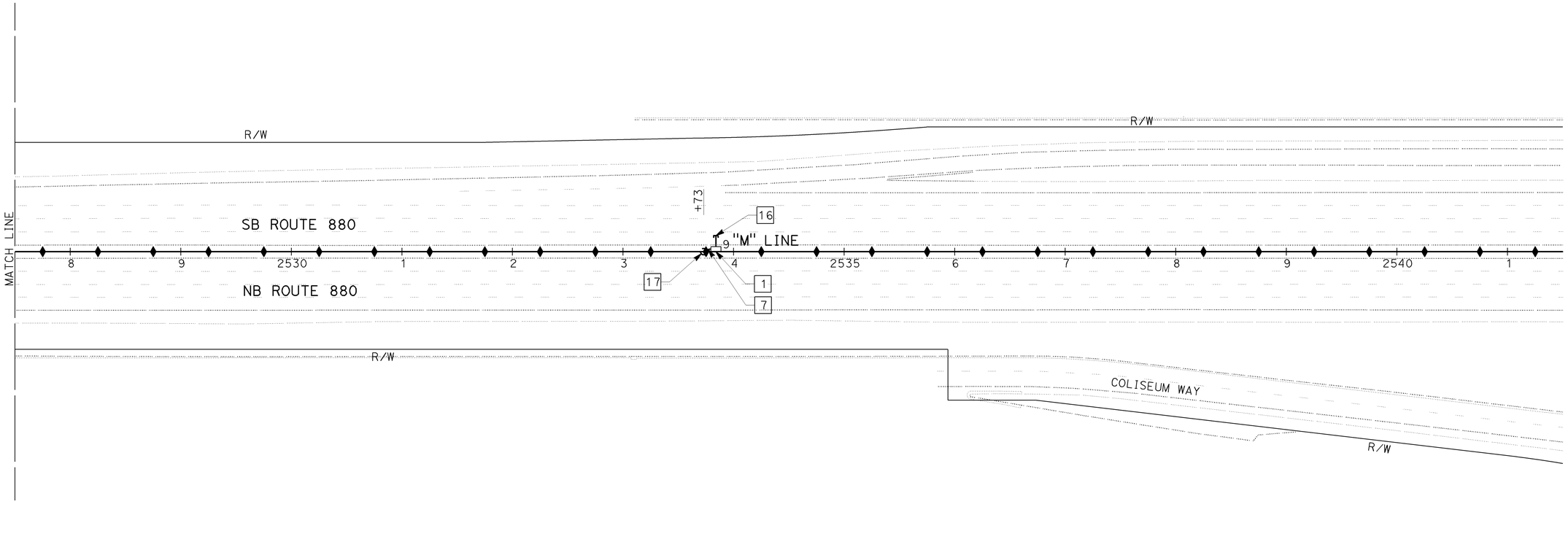

TOLLING SYSTEM INFRASTRUCTURE

SCALE: 1" = 50'

FOR NOTES, ABBREVIATIONS, AND LEGEND, SEE SHEET E-115

APPROVED FOR ELECTRICAL WORK ONLY

E-183

	REVISED BY	DATE REVISED
	VP	6/22/15

CALCULATED-DESIGNED BY: VASAVI PANNALA
CHECKED BY: RANDAL DURRENBERGER
CONSULTANT FUNCTIONAL SUPERVISOR: KEVIN AGUIGUI

STATE OF CALIFORNIA - DEPARTMENT OF TRANSPORTATION
Caltrans

LAST REVISION: DATE PLOTTED => 19-AUG-2015 06-22-15 TIME PLOTTED => 12:33

Dist	COUNTY	ROUTE	POST MILES TOTAL PROJECT	SHEET No.	TOTAL SHEETS
04	Ala	880	2.9/27.3	825	906

REGISTERED ELECTRICAL ENGINEER 6/22/15 DATE

6-22-15
PLANS APPROVAL DATE

REGISTERED PROFESSIONAL ENGINEER KEVIN AGUIGUI No. 19880 Exp. 3/31/16 ELECTRICAL STATE OF CALIFORNIA

THE STATE OF CALIFORNIA OR ITS OFFICERS OR AGENTS SHALL NOT BE RESPONSIBLE FOR THE ACCURACY OR COMPLETENESS OF SCANNED COPIES OF THIS PLAN SHEET.

KIMLEY-HORN AND ASSOC.
1300 CLAY STREET
SUITE 325
OAKLAND, CA 94612

BAY AREA INFRASTRUCTURE FINANCING AUTHORITY
101 EIGHTH ST, 3rd FLOOR
OAKLAND, CA 94607

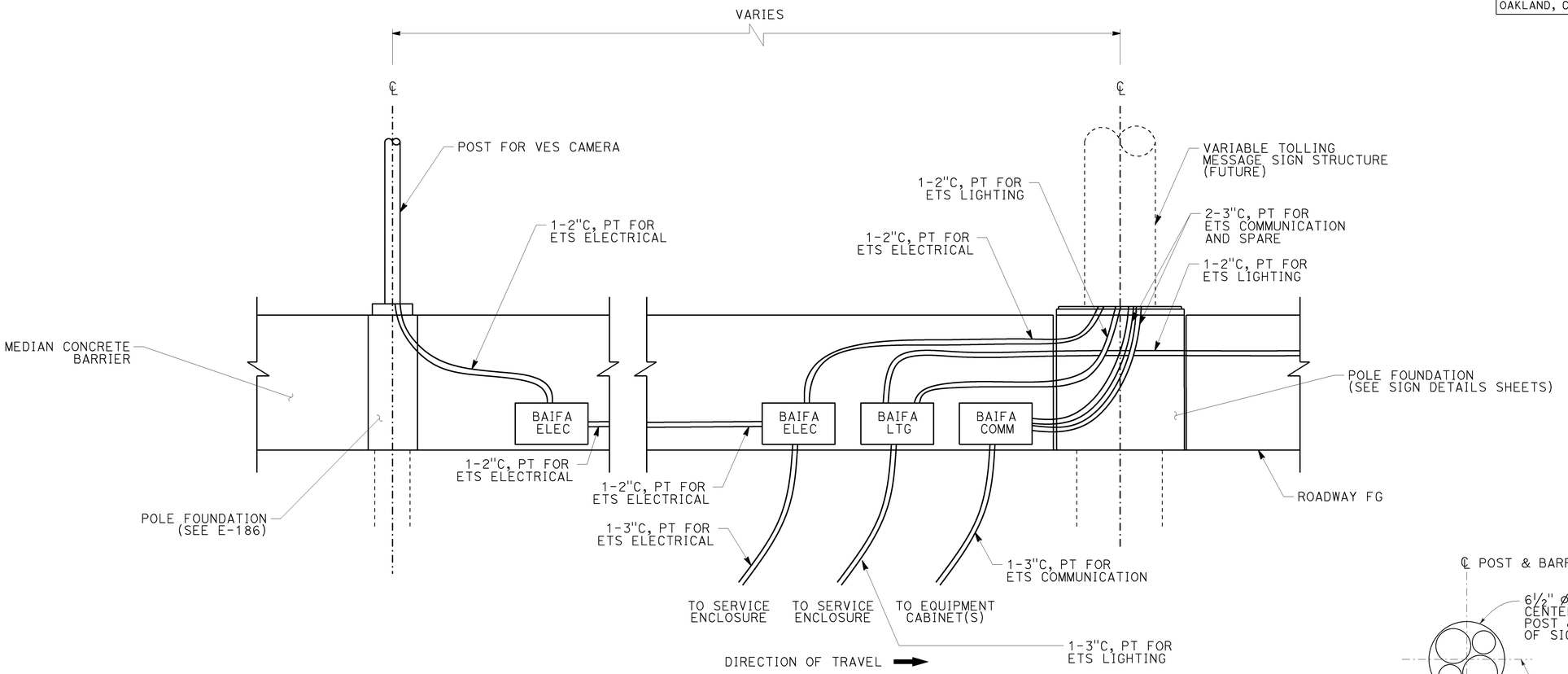

MEDIAN-MOUNTED VARIABLE TOLL MESSAGE SIGN

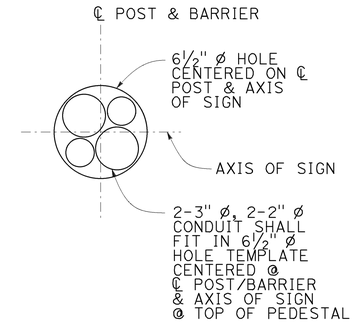

CONDUIT DETAIL

NOTES: (THIS SHEET ONLY)

1. CONDUITS MUST EXTEND 2" ABOVE TOP OF FOUNDATION AND BE CAPPED.
2. CONDUITS FOR VTMS STRUCTURE MUST EXIT TOP OF FOUNDATION WITH A 6½" DIAMETER CIRCLE CENTERED ON FOUNDATION. SEE CONDUIT DETAIL WITHIN THIS SHEET.

TOLLING SYSTEM INFRASTRUCTURE DETAILS

NO SCALE

E-184

STATE OF CALIFORNIA - DEPARTMENT OF TRANSPORTATION
Caltrans

CONSULTANT FUNCTIONAL SUPERVISOR: KEVIN AGUIGUI
CALCULATED-DESIGNED BY: VASAVI PANNALA
CHECKED BY: RANDAL DURRENBERGER
REVISED BY: VP
DATE REVISED: 6/22/15

LAST REVISION 06-22-15
DATE PLOTTED => 19-AUG-2015
TIME PLOTTED => 12:33

Dist	COUNTY	ROUTE	POST MILES TOTAL PROJECT	SHEET No.	TOTAL SHEETS
04	Ala	880	2.9/27.3	826	906

6/22/15
REGISTERED ELECTRICAL ENGINEER DATE

6-22-15
PLANS APPROVAL DATE

REGISTERED PROFESSIONAL ENGINEER
KEVIN AGUIGUI
No. 19880
Exp. 3/31/16
ELECTRICAL
STATE OF CALIFORNIA

THE STATE OF CALIFORNIA OR ITS OFFICERS OR AGENTS SHALL NOT BE RESPONSIBLE FOR THE ACCURACY OR COMPLETENESS OF SCANNED COPIES OF THIS PLAN SHEET.

KIMLEY-HORN AND ASSOC.
1300 CLAY STREET
SUITE 325
OAKLAND, CA 94612

BAY AREA INFRASTRUCTURE FINANCING AUTHORITY
101 EIGHTH ST, 3rd FLOOR
OAKLAND, CA 94607

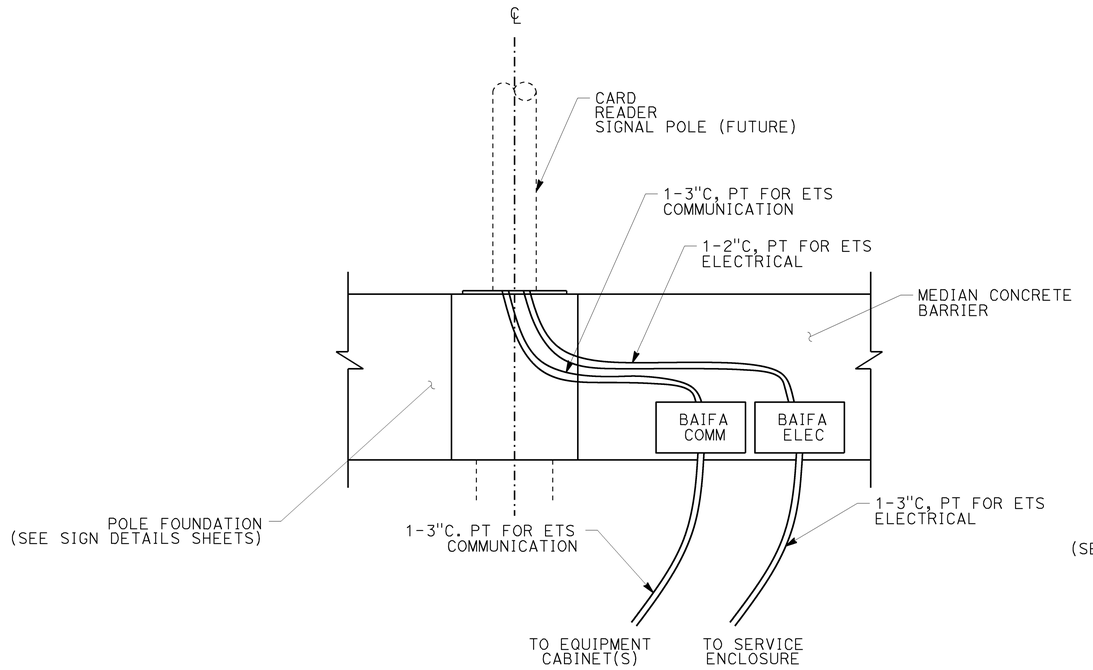

MEDIAN-MOUNTED CARD READER STRUCTURE

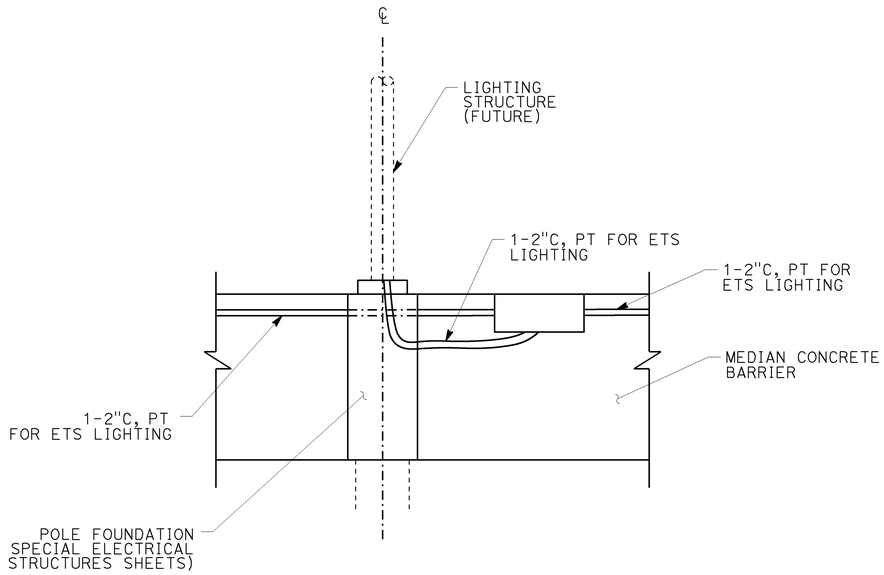

MEDIAN-MOUNTED LIGHTING STRUCTURE

NOTE: (THIS SHEET ONLY)

1. CONDUITS MUST EXTEND 2" ABOVE TOP OF FOUNDATION AND BE CAPPED.

TOLLING SYSTEM INFRASTRUCTURE DETAILS

NO SCALE

E-185

STATE OF CALIFORNIA - DEPARTMENT OF TRANSPORTATION
Caltrans

CONSULTANT FUNCTIONAL SUPERVISOR: KEVIN AGUIGUI
CALCULATED-DESIGNED BY: VASAVI PANNALA
CHECKED BY: RANDAL DURRENBERGER
REVISED BY: VP
DATE REVISED: 6/22/15

LAST REVISION DATE PLOTTED => 19-AUG-2015
TIME PLOTTED => 12:33
06-22-15

Dist	COUNTY	ROUTE	POST MILES TOTAL PROJECT	SHEET No.	TOTAL SHEETS
04	Ala	880	2.9/27.3	827	906

REGISTERED ELECTRICAL ENGINEER — DATE 6/22/15

PLANS APPROVAL DATE 6-22-15

REGISTERED PROFESSIONAL ENGINEER — KEVIN AGUIGUI — No. 19880 — Exp. 3/31/16 ELECTRICAL — STATE OF CALIFORNIA

THE STATE OF CALIFORNIA OR ITS OFFICERS OR AGENTS SHALL NOT BE RESPONSIBLE FOR THE ACCURACY OR COMPLETENESS OF SCANNED COPIES OF THIS PLAN SHEET.

KIMLEY-HORN AND ASSOC.
1300 CLAY STREET
SUITE 325
OAKLAND, CA 94612

BAY AREA INFRASTRUCTURE FINANCING AUTHORITY
101 EIGHTH ST, 3rd FLOOR
OAKLAND, CA 94607

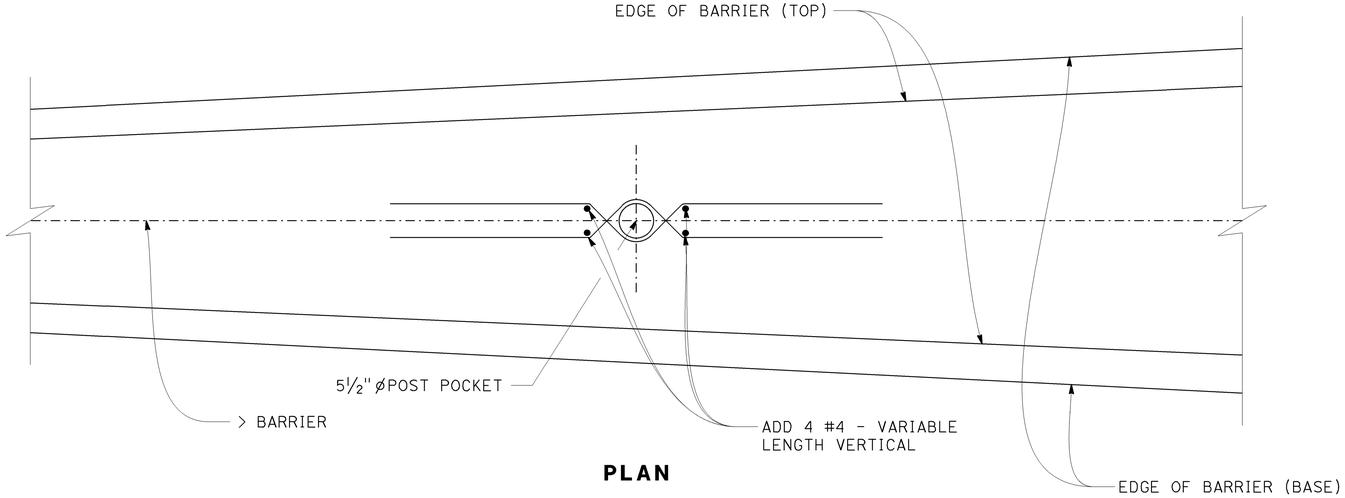

PLAN

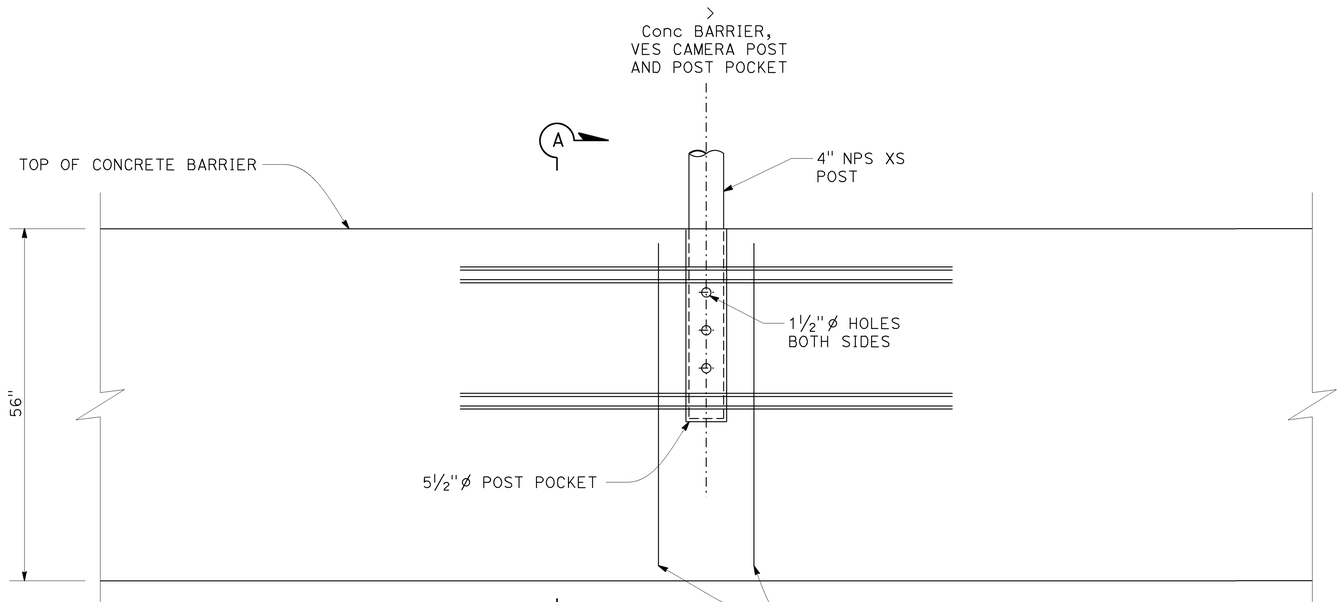

ELEVATION

VES CAMERA POST FOUNDATION

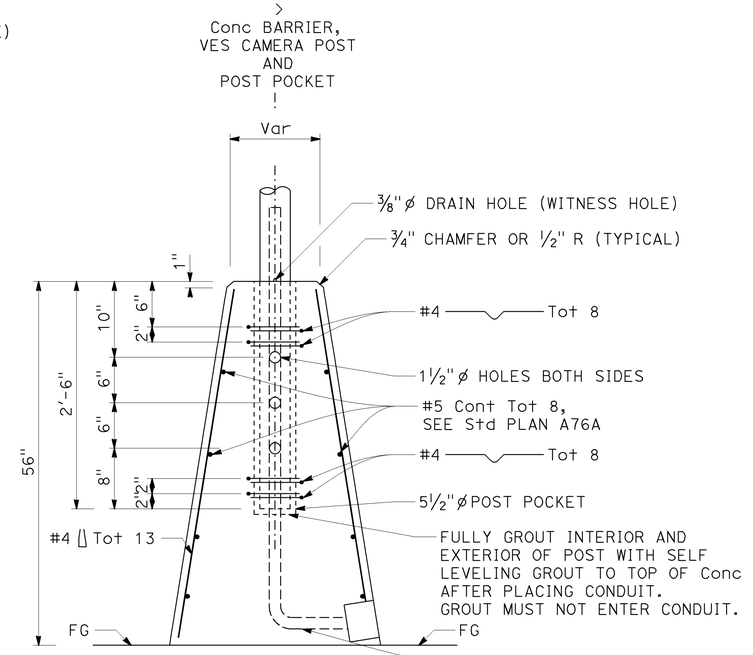

SECTION A-A

TOLLING SYSTEM INFRASTRUCTURE DETAILS

NO SCALE

E-186

CALCULATED-DESIGNED BY	
CHECKED BY	
CONSULTANT FUNCTIONAL SUPERVISOR	KEVIN AGUIGUI
VASAVI PANNALA	RANDAL DURRENBERGER
REVISED BY	VP
DATE REVISED	6/22/15

STATE OF CALIFORNIA - DEPARTMENT OF TRANSPORTATION — Caltrans®

LAST REVISION: DATE PLOTTED => 19-AUG-2015 06-22-15 TIME PLOTTED => 12:33

BORDER LAST REVISED 7/2/2010 | USERNAME => s126849 DGN FILE => 0414000421ua186.dgn | RELATIVE BORDER SCALE IS IN INCHES 0 1 2 3 | UNIT 0727 | PROJECT NUMBER & PHASE 04140004211

Dist	COUNTY	ROUTE	POST MILES TOTAL PROJECT	SHEET No.	TOTAL SHEETS
04	Ala	880	2.9/27.3	828	906

6/22/15
REGISTERED ELECTRICAL ENGINEER DATE

REGISTERED PROFESSIONAL ENGINEER
KEVIN AGUIGUI
No. 19880
Exp. 3/31/16
ELECTRICAL
STATE OF CALIFORNIA

6-22-15
PLANS APPROVAL DATE

THE STATE OF CALIFORNIA OR ITS OFFICERS OR AGENTS SHALL NOT BE RESPONSIBLE FOR THE ACCURACY OR COMPLETENESS OF SCANNED COPIES OF THIS PLAN SHEET.

KIMLEY-HORN AND ASSOC.
1300 CLAY STREET
SUITE 325
OAKLAND, CA 94612

BAY AREA INFRASTRUCTURE FINANCING AUTHORITY
101 EIGHTH ST, 3rd FLOOR
OAKLAND, CA 94607

TOLLING SYSTEM INFRASTRUCTURE

SHEET No.	CONDUIT		PULL BOXES	4" Dia NPS XS POST FOR VES CAMERA (11')		4" Dia NPS XS POST FOR CHP BEACON (7')	30" CIDH LIGHTING FOUNDATION
	2"	3"	#9	POST & REBAR (N)	CONCRETE FOUNDATION	POST & REBAR (N)	
	ft		EA				ft
E-116	40	65	3				
E-117	300	15	3				
E-118	1420	55	9	1	1		
E-119	1335	15	8				
E-120	730	15	5				
E-121	65	55	3	1	1		
E-122	85	85	4	1	1		
E-123	2050	725	17				
E-124	620		3				
E-125	1500	230	15	2		2	
E-126	240		2				
E-127	360	120	6	2	2		
E-128	2800	160	15				
E-129	920	15	5				
E-130	1550	190	12				
E-131	350		2				
E-132	100	40	4	2	2		
E-133	510		3				
E-134	1800	180	15				
E-135	750	240	9	1	1		
E-136	60	60	3	1	1		
E-137	15	65	3				
E-138	100	40	4	2	2		
E-139	1185	50	8				
E-140	1350		8				
E-141	285	55	5	2	2		
E-142	1100	150	9				
E-143	2040		10				
E-144	2140	150	14	1	1		14.67
E-145	565		3				
E-146	120	150	6				
E-147	100	40	4	2	2		
E-148	1465	240	13	1	1		
E-149	1350	60	9	1	1		
E-150	1070		6				
E-151	1220	65	7				
E-152	1580		10				
E-153	2145	50	13	2	2		
E-154	860	300	14	2		2	
E-155	975	30	5				
E-156	2400	1150	20	1	1		
E-157	900	500	9				
E-158	1450	60	9				
E-159	1440		7				

(N) NOT A SEPARATE PAY ITEM, FOR INFORMATION ONLY

TOLLING SYSTEM INFRASTRUCTURE

SHEET No.	CONDUIT		PULL BOXES	4" Dia NPS XS POST FOR VES CAMERA (11')		4" Dia NPS XS POST FOR CHP BEACON (7')	30" CIDH LIGHTING FOUNDATION
	2"	3"	#9	POST & REBAR (N)	CONCRETE FOUNDATION	POST & REBAR (N)	
	ft		EA				ft
E-160	1100	595	14	2	2		
E-161	55		1				
E-162	990		5				
E-163	1150	35	8				
E-164	1970	30	10				
E-165	100	40	4	2			
E-166	20	65	3				
E-167	1200	1260	11				
E-168	550	850	10	1	1		
E-169	1700	410	15				
E-170	55	15	1				
E-171	630	15	4				
E-172	700	30	6	1			
E-173	2800	30	16				
E-174	2300	50	13				
E-175	570		3				
E-176	40	35	3	1	1		
E-177	35	55	3				
E-178	30	55	4	1	1		
E-179	20	65	3				
E-180	1220	1290	15	1	1		
E-181	20	30	2				
E-182	30	65	3				
E-183	10	15	1				
TOTAL	60735	10455	500	34	27	4	14.67

TOLLING SYSTEM INFRASTRUCTURE QUANTITIES

E-187

REVISED BY	DATE REVISED
VP	6/22/15

CALCULATED-DESIGNED BY: VASAVI PANNALA
CHECKED BY: RANDAL DURRENBERGER
CONSULTANT FUNCTIONAL SUPERVISOR: KEVIN AGUIGUI
STATE OF CALIFORNIA - DEPARTMENT OF TRANSPORTATION
Caltrans

LAST REVISION 06-22-15
DATE PLOTTED => 19-AUG-2015
TIME PLOTTED => 12:34

BORDER LAST REVISED 7/2/2010
USERNAME => s126849
DGN FILE => 0414000421ua187.dgn
RELATIVE BORDER SCALE IS IN INCHES 0 1 2 3
UNIT 0727
PROJECT NUMBER & PHASE 04140004211

DIST	COUNTY	ROUTE	POST MILES TOTAL PROJECT	SHEET No	TOTAL SHEETS
04	Ala	880	2.9/27.3	829	906

Mahfoud A Licha 8/12/15
REGISTERED CIVIL ENGINEER DATE

6-22-15
PLANS APPROVAL DATE

REGISTERED PROFESSIONAL ENGINEER MAHFOUD A. LICHA No. C62816 Exp. 6/30/16 CIVIL STATE OF CALIFORNIA

The State of California or its officers or agents shall not be responsible for the accuracy or completeness of electronic copies of this plan sheet.

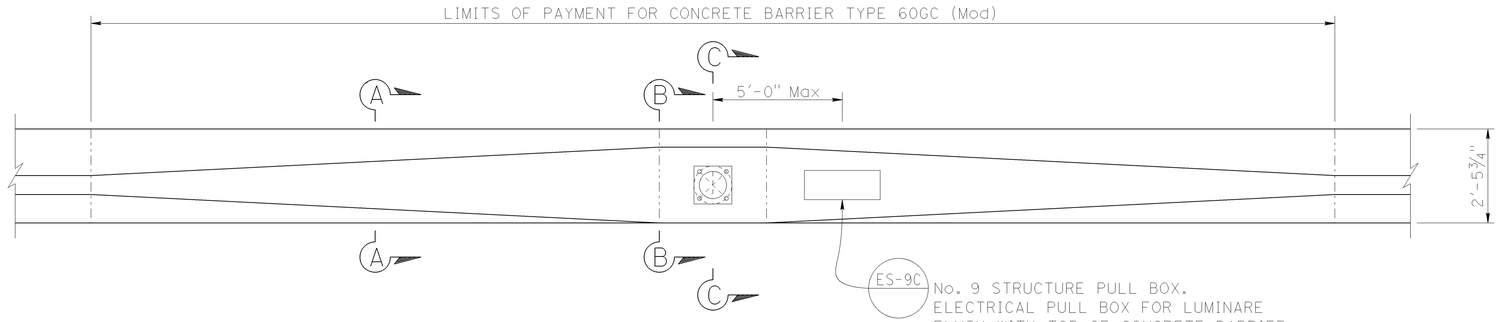

PART PLAN VIEW

NOTE: BOTH SIDES SIMILAR

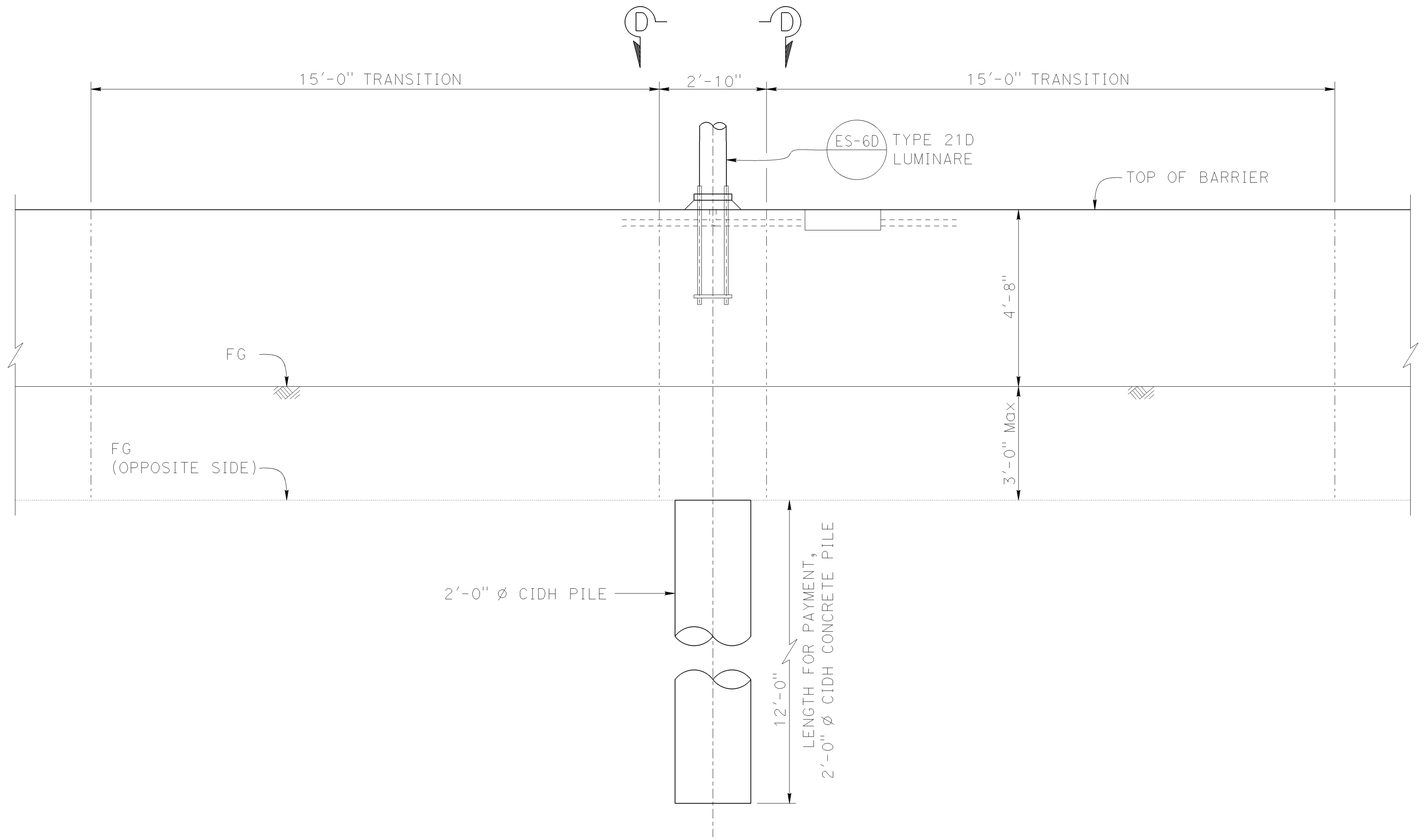

PART ELEVATION

NOTE: BOTH SIDES SIMILAR

GENERAL NOTES:

SPECIFICATIONS

Design: AASHTO Standard Specifications for Structural Supports for Highway Signs, Luminaires and Traffic Signals, Sixth Edition.

LOADING

Wind Loadings: 100 MPH (3 Second gust)

UNIT STRESSES

Structural Steel: fy = 55,000 psi tapered steel tube
fy = 50,000 psi unless otherwise noted

Anchor Bolts: fy = 55 ksi

Reinforced Concrete: f'c = 3,600 psi
fy = 60,000 psi

NOTES:

1. For "SECTION A-A", "SECTION B-B", "SECTION C-C" and "SECTION D-D", see SES-2.
2. For pole location, see "ROADWAY PLANS".
3. All steel must be galvanized after fabrication.
4. During pole erection the post shall be raked as necessary with the use of leveling nuts to provide a plumb pole axis.
5. For details not show, see "STANDARD PLANS 2010" and "REVISED STANDARD PLANS 2010".
6. For details not shown see "ROADWAY PLANS".

NOTE:
THE CONTRACTOR MUST VERIFY ALL CONTROLLING FIELD DIMENSIONS BEFORE ORDERING OR FABRICATING ANY MATERIAL.

STANDARD PLAN SHEET No.
DETAIL No.

NO SCALE

TYPE 21D LUMINAIRE
TYPE 60GC BARRIER (MODIFIED)
BARRIER TRANSITION

SES-1

BRANCH CHIEF *JEFF WOODY*

	BY	CHECKED
DESIGN	M.LICHA	J.DATILES
DETAILS	M.CLEVERLEY	M.LICHA
QUANTITIES	X	X

STATE OF CALIFORNIA
DEPARTMENT OF TRANSPORTATION

DIVISION OF ENGINEERING SERVICES
DESIGN AND TECHNICAL SERVICES
SPECIAL DESIGNS BRANCH
A

BRIDGE NO. N/A
POST MILE 2.9/27.3

(ENGLISH) SPECIAL DESIGNS BRANCH BORDER SHEET (REV. 4-1-14)

ORIGINAL SCALE IN INCHES FOR REDUCED PLANS 0 1 2 3

UNIT: 3619
PROJECT NUMBER & PHASE: 0414000421-1 CONTRACT NO.: 04-2j0704

DISREGARD PRINTS BEARING EARLIER REVISION DATES →

REVISION DATES				SHEET	OF
				X	X

FILE => /2014sd/04-2j0701/04-2j0701_ses-1

USERNAME => s126849 DATE PLOTTED => 18-AUG-2015 TIME PLOTTED => 12:55

DIST	COUNTY	ROUTE	POST MILES TOTAL PROJECT	SHEET No	TOTAL SHEETS
04	Ala	880	2.9/27.3	830	906

Mahfoud A Licha 8/12/15
REGISTERED CIVIL ENGINEER DATE

6-22-15
PLANS APPROVAL DATE

REGISTERED PROFESSIONAL ENGINEER MAHFOUD A. LICHA No. C62816 Exp. 6/30/16 CIVIL STATE OF CALIFORNIA

The State of California or its officers or agents shall not be responsible for the accuracy or completeness of electronic copies of this plan sheet.

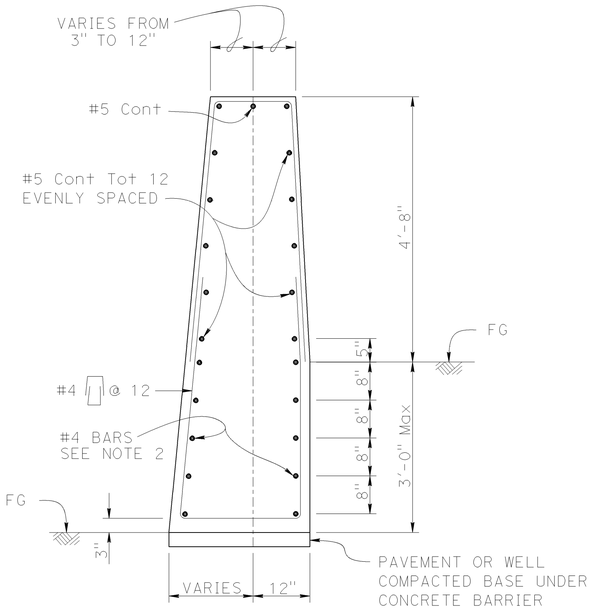

SECTION A-A

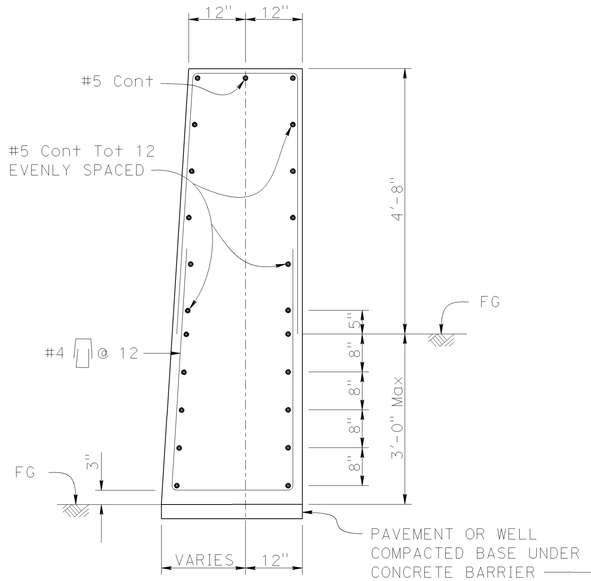

SECTION B-B

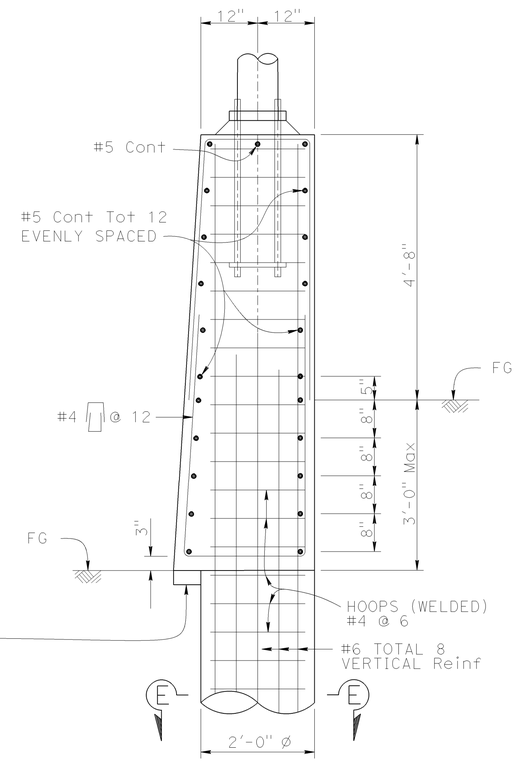

SECTION C-C

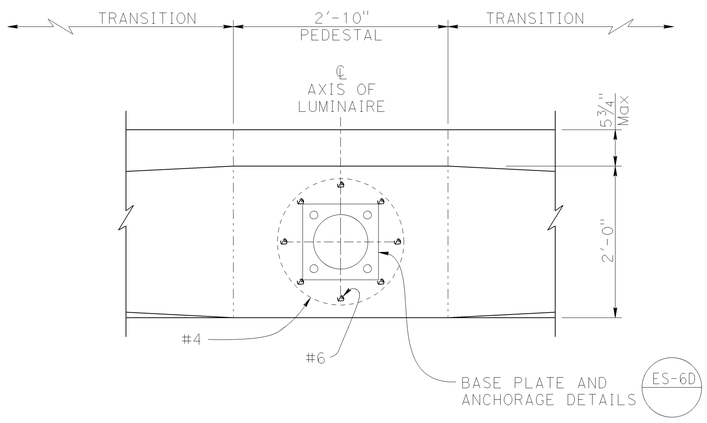

SECTION D-D

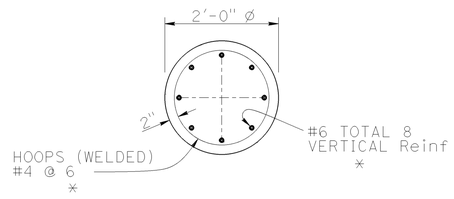

SECTION E-E
(SEE NOTE 1)

* #6 VERTICAL Reinf AND #4 WELDED HOOPS MUST BE PLACED TO 3" BELOW TOP OF BARRIER

NOTES:

1. For inspection tube details, see 2010 Standard Plans ES-7N, Detail I.
2. For roadbed surfaces offset greater than 1½" and less than or equal to 3", no rebars required. For roadbed surfaces offset greater than 3" and less than or equal to 8", use two #4 rebars at 3" above the lower roadbed surface. For roadbed surfaces offset greater than 8" and less than or equal to 12", use two #4 rebars at 3" above the lower roadbed surface and two #4 rebars at 8" above the lower roadbed surface. For roadbed surfaces offset greater than 12" and less than or equal to 36", use two #4 rebars at 3" above the lower roadbed surface and two #4 rebars at every 8" increment vertical spacing above the first two #4 rebars.

NOTE:
THE CONTRACTOR MUST VERIFY ALL CONTROLLING FIELD DIMENSIONS BEFORE ORDERING OR FABRICATING ANY MATERIAL.

STANDARD PLAN SHEET No.
DETAIL No.

NO SCALE

BRANCH CHIEF *JEFF WOODY*

	BY	CHECKED
DESIGN	M.LICHA	J.DATILES
DETAILS	M.CLEVERLEY	M.LICHA
QUANTITIES	X	X

STATE OF **CALIFORNIA** DEPARTMENT OF TRANSPORTATION

DIVISION OF ENGINEERING SERVICES DESIGN AND TECHNICAL SERVICES
SPECIAL DESIGNS BRANCH **A**

BRIDGE NO. N/A
POST MILE 2.9/27.3

TYPE 60GC BARRIER (MODIFIED)
BARRIER TRANSITION DETAILS

SES-2

(ENGLISH) SPECIAL DESIGNS BRANCH BORDER SHEET (REV. 4-1-14)

ORIGINAL SCALE IN INCHES FOR REDUCED PLANS 0 1 2 3

UNIT: 3619
PROJECT NUMBER & PHASE: 0414000421-1 CONTRACT NO.: 04-2j0704

DISREGARD PRINTS BEARING EARLIER REVISION DATES →

REVISION DATES				SHEET	OF
				X	X

FILE => /2014sd/04-2j0701/04-2j0701_ses2.dgn

USERNAME => s126849 DATE PLOTTED => 18-AUG-2015 TIME PLOTTED => 12:55

DIST	COUNTY	ROUTE	POST MILES TOTAL PROJECT	SHEET No	TOTAL SHEETS
04	Ala	880	2.9/27.3	831	906

Mahfoud A Licha 8/12/15
REGISTERED CIVIL ENGINEER DATE

6-22-15
PLANS APPROVAL DATE

REGISTERED PROFESSIONAL ENGINEER MAHFOUD A. LICHA No. C62816 Exp. 6/30/16 CIVIL STATE OF CALIFORNIA

The State of California or its officers or agents shall not be responsible for the accuracy or completeness of electronic copies of this plan sheet.

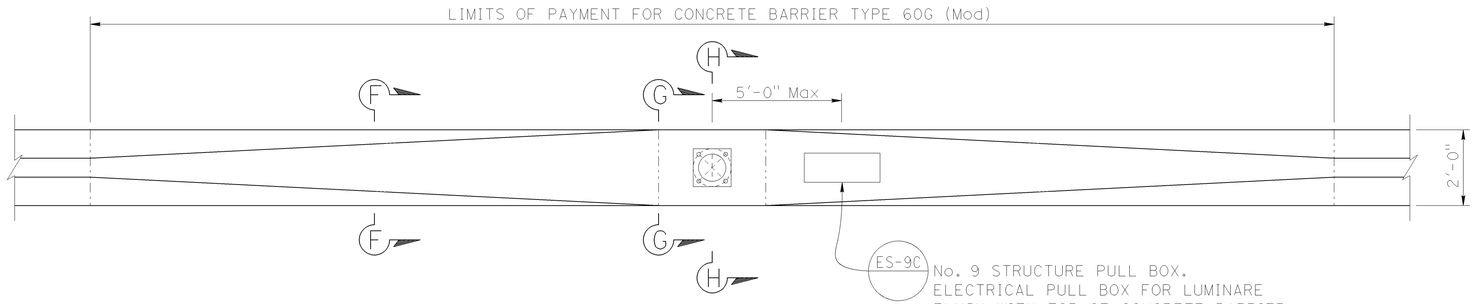

PART PLAN VIEW

NOTE: BOTH SIDES SIMILAR

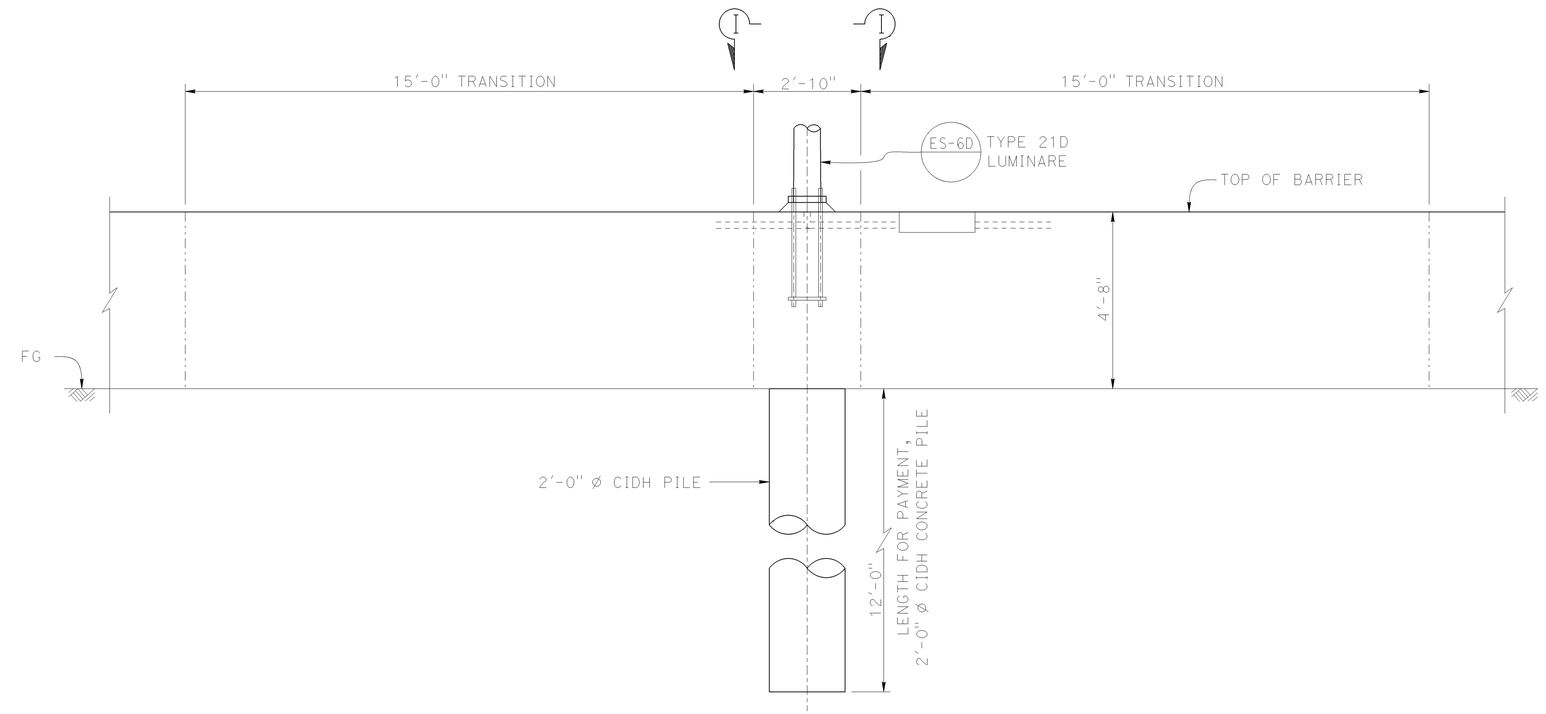

PART ELEVATION

NOTE: BOTH SIDES SIMILAR

GENERAL NOTES:

SPECIFICATIONS

Design: AASHTO Standard Specifications for Structural Supports for Highway Signs, Luminaires and Traffic Signals, Sixth Edition.

LOADING

Wind Loadings: 100 MPH (3 Second gust)

UNIT STRESSES

Structural Steel: fy = 55,000 psi tapered steel tube
fy = 50,000 psi unless otherwise noted

Anchor Bolts: fy = 55 ksi

Reinforced Concrete: f'c = 3,600 psi
fy = 60,000 psi

NOTES:

1. For "SECTION F-F", "SECTION G-G", "SECTION H-H" and "SECTION I-I", see SES-4.
2. For pole location, see "ROADWAY PLANS".
3. All steel must be galvanized after fabrication.
4. During pole erection the post shall be raked as necessary with the use of leveling nuts to provide a plumb pole axis.
5. For details not show, see "STANDARD PLANS 2010" and "REVISED STANDARD PLANS 2010".
6. For details not shown see "ROADWAY PLANS".

NOTE:
THE CONTRACTOR MUST VERIFY ALL CONTROLLING FIELD DIMENSIONS BEFORE ORDERING OR FABRICATING ANY MATERIAL.

STANDARD PLAN SHEET No.
DETAIL No.

NO SCALE

TYPE 21D LUMINAIRE
TYPE 60G BARRIER (MODIFIED)
BARRIER TRANSITION

SES-3

BRANCH CHIEF *JEFF WOODY*

	BY	CHECKED
DESIGN	M.LICHA	J.DATILES
DETAILS	M.CLEVERLEY	M.LICHA
QUANTITIES	X	X

STATE OF **CALIFORNIA**
DEPARTMENT OF TRANSPORTATION

DIVISION OF ENGINEERING SERVICES
DESIGN AND TECHNICAL SERVICES
SPECIAL DESIGNS BRANCH **A**

BRIDGE NO. N/A
POST MILE 2.9/27.3

(ENGLISH) SPECIAL DESIGNS BRANCH BORDER SHEET (REV. 4-1-14)

ORIGINAL SCALE IN INCHES FOR REDUCED PLANS 0 1 2 3

UNIT: 3619
PROJECT NUMBER & PHASE: 0414000421-1 CONTRACT NO.: 04-2j0704

DISREGARD PRINTS BEARING EARLIER REVISION DATES →

REVISION DATES				SHEET	OF
				X	X

FILE => /2014sd/04-2j0701/04-2j0701_ses-3

USERNAME => s126849 DATE PLOTTED => 18-AUG-2015 TIME PLOTTED => 12:55

DIST	COUNTY	ROUTE	POST MILES TOTAL PROJECT	SHEET No	TOTAL SHEETS
04	Ala	880	2.9/27.3	832	906

Mahfoud A Licha 8/12/15
REGISTERED CIVIL ENGINEER DATE

6-22-15
PLANS APPROVAL DATE

REGISTERED PROFESSIONAL ENGINEER MAHFOUD A. LICHA No. C62816 Exp. 6/30/16 CIVIL STATE OF CALIFORNIA

The State of California or its officers or agents shall not be responsible for the accuracy or completeness of electronic copies of this plan sheet.

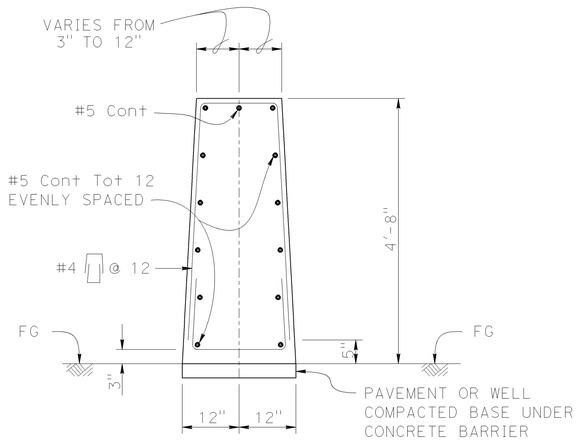

SECTION F-F

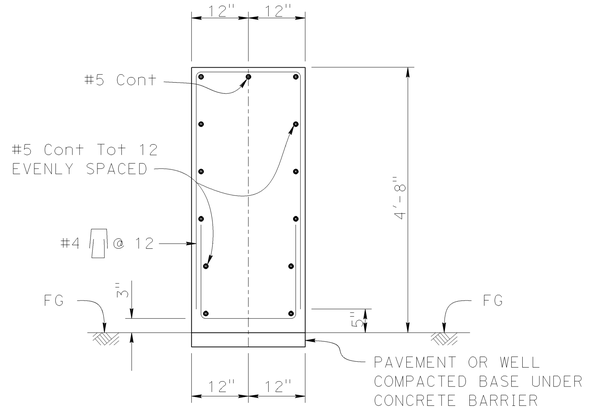

SECTION G-G

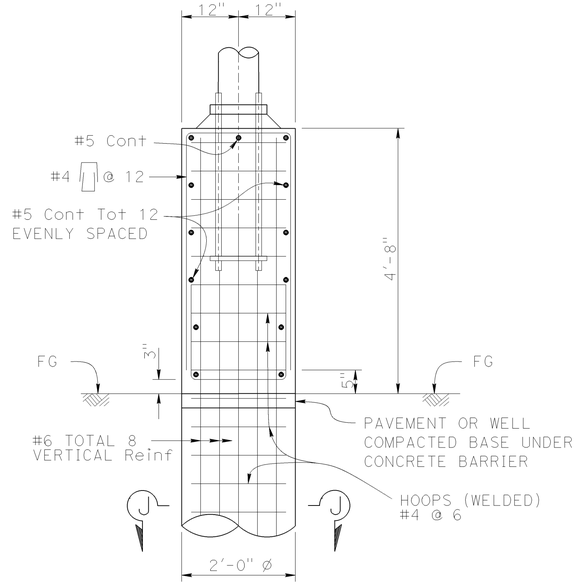

SECTION H-H

NOTES:

1. For inspection tube details, see 2010 Standard Plans ES-7N, Detail I

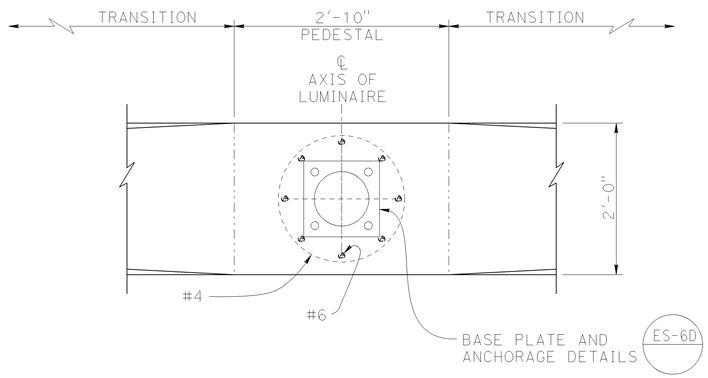

SECTION I-I

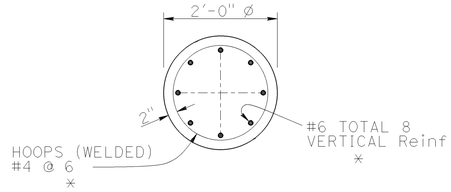

SECTION J-J
(SEE NOTE 1)

* #6 VERTICAL Reinf AND #4 WELDED HOOPS MUST BE PLACED TO 3" BELOW TOP OF BARRIER

NOTE:
THE CONTRACTOR MUST VERIFY ALL CONTROLLING FIELD DIMENSIONS BEFORE ORDERING OR FABRICATING ANY MATERIAL.

STANDARD PLAN SHEET No.
DETAIL No.

NO SCALE

BRANCH CHIEF	JEFF WOODY				
	DESIGN	BY M.LICHA	CHECKED J.DATILES		
	DETAILS	BY M.CLEVERLEY	CHECKED M.LICHA		
	QUANTITIES	BY X	CHECKED X		

STATE OF CALIFORNIA
DEPARTMENT OF TRANSPORTATION

DIVISION OF ENGINEERING SERVICES
DESIGN AND TECHNICAL SERVICES
SPECIAL DESIGNS BRANCH

A

BRIDGE NO. N/A
POST MILE 2.9/27.3

TYPE 60G BARRIER (MODIFIED)
BARRIER TRANSITION DETAILS

SES-4

(ENGLISH) SPECIAL DESIGNS BRANCH BORDER SHEET (REV. 4-1-14)

ORIGINAL SCALE IN INCHES FOR REDUCED PLANS 0 1 2 3

UNIT: 3619
PROJECT NUMBER & PHASE: 0414000421-1 CONTRACT NO.: 04-2j0704

DISREGARD PRINTS BEARING EARLIER REVISION DATES →

REVISION DATES				SHEET	OF
				X	X

FILE => /2014sd/04-2j0701/04-2j0701_ses4.dgn

USERNAME => s126849 DATE PLOTTED => 18-AUG-2015 TIME PLOTTED => 12:55

DIST	COUNTY	ROUTE	POST MILES TOTAL PROJECT	SHEET No	TOTAL SHEETS
04	Ala	880	2.9/27.3	833	906

Mahfoud A Licha 8/12/15
REGISTERED CIVIL ENGINEER DATE

6-22-15
PLANS APPROVAL DATE

REGISTERED PROFESSIONAL ENGINEER MAHFOUD A. LICHA No. C62816 Exp. 6/30/16 CIVIL STATE OF CALIFORNIA

The State of California or its officers or agents shall not be responsible for the accuracy or completeness of electronic copies of this plan sheet.

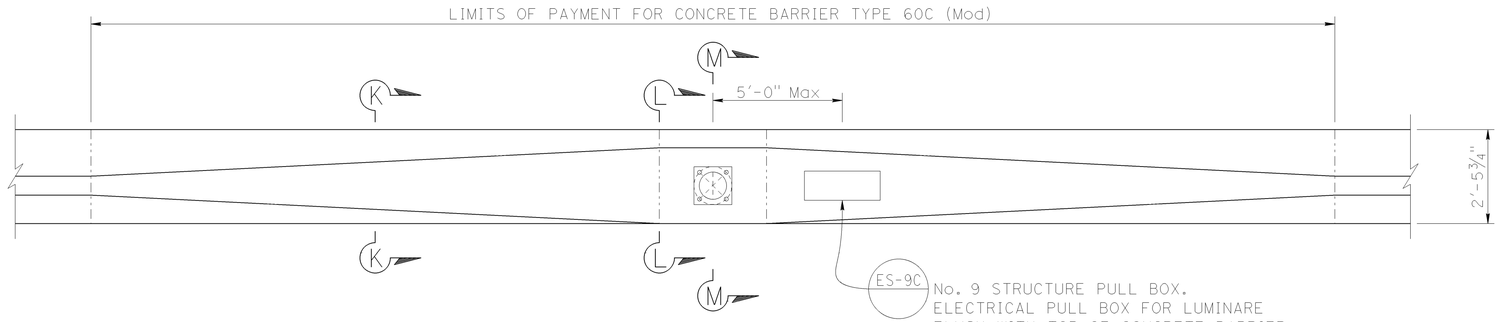

PART PLAN VIEW

NOTE: BOTH SIDES SIMILAR

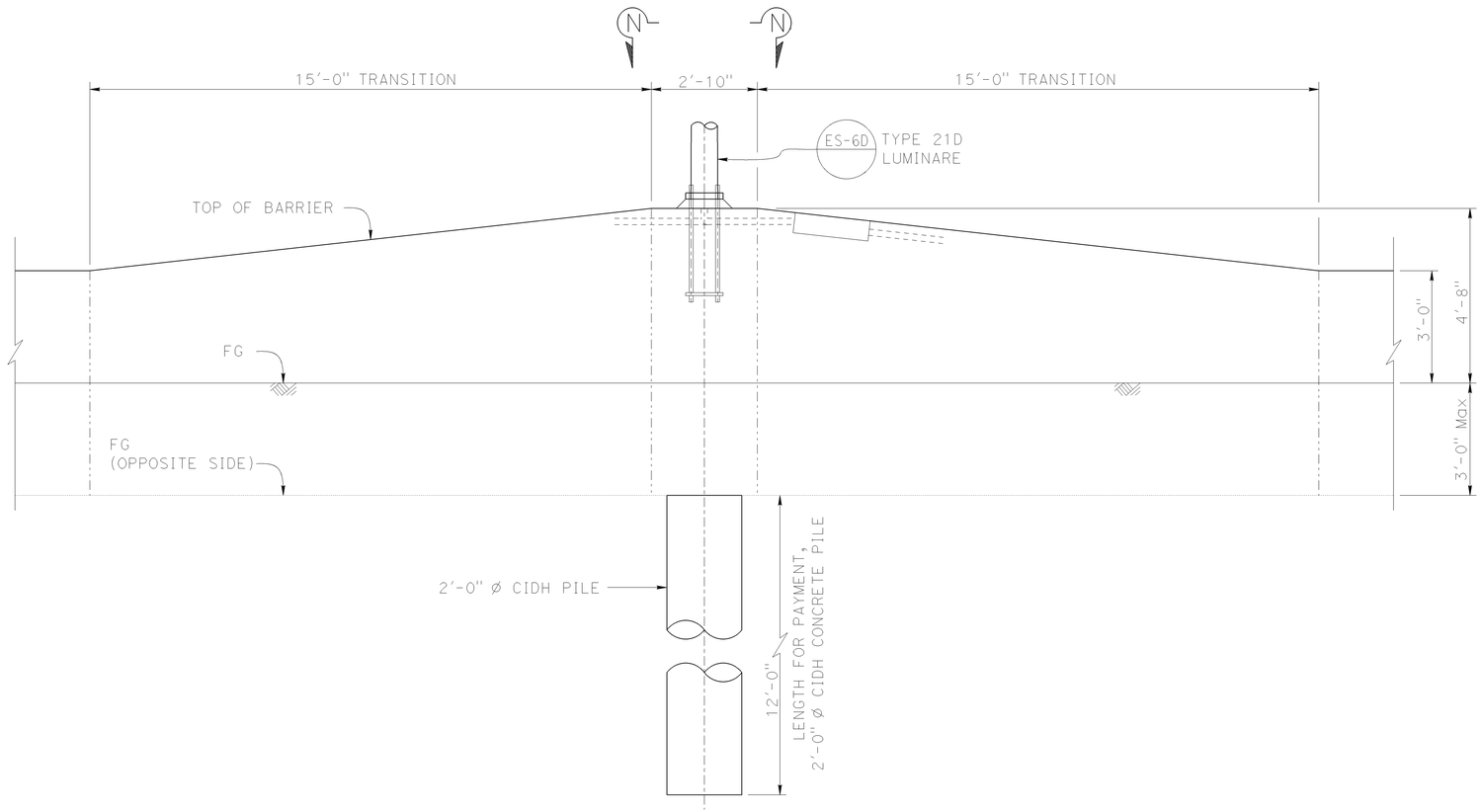

PART ELEVATION

NOTE: BOTH SIDES SIMILAR

GENERAL NOTES:

SPECIFICATIONS

Design: AASHTO Standard Specifications for Structural Supports for Highway Signs, Luminaires and Traffic Signals, Sixth Edition.

LOADING

Wind Loadings: 100 MPH (3 Second gust)

UNIT STRESSES

Structural Steel: fy = 55,000 psi tapered steel tube
fy = 50,000 psi unless otherwise noted

Anchor Bolts: fy = 55 ksi

Reinforced Concrete: f'c = 3,600 psi
fy = 60,000 psi

NOTES:

1. For "SECTION K-K", "SECTION L-L", "SECTION M-M" and "SECTION N-N", see SES-6.
2. For pole location, see "ROADWAY PLANS".
3. All steel must be galvanized after fabrication.
4. During pole erection the post shall be raked as necessary with the use of leveling nuts to provide a plumb pole axis.
5. Barrier height varies, see "ROADWAY PLANS". Barrier height must be 4'-8" minimum at Type 21D Luminaire locations.
6. For details not show, see "STANDARD PLANS 2010" and "REVISED STANDARD PLANS 2010".
7. For details not shown see "ROADWAY PLANS".

NOTE:
THE CONTRACTOR MUST VERIFY ALL CONTROLLING FIELD DIMENSIONS BEFORE ORDERING OR FABRICATING ANY MATERIAL.

STANDARD PLAN SHEET No.
DETAIL No.

NO SCALE

TYPE 21D LUMINAIRE
TYPE 60C BARRIER (MODIFIED)
BARRIER TRANSITION

SES-5

BRANCH CHIEF *JEFF WOODY*

	BY	CHECKED
DESIGN	M.LICHA	J.DATILES
DETAILS	M.CLEVERLEY	M.LICHA
QUANTITIES	X	X

STATE OF **CALIFORNIA**
DEPARTMENT OF TRANSPORTATION

DIVISION OF ENGINEERING SERVICES
DESIGN AND TECHNICAL SERVICES
SPECIAL DESIGNS BRANCH **A**

BRIDGE NO. N/A
POST MILE 2.9/27.3

(ENGLISH) SPECIAL DESIGNS BRANCH BORDER SHEET (REV. 4-1-14)

ORIGINAL SCALE IN INCHES FOR REDUCED PLANS 0 1 2 3

UNIT: 3619
PROJECT NUMBER & PHASE: 0414000421-1 CONTRACT NO.: 04-2j0704

DISREGARD PRINTS BEARING EARLIER REVISION DATES →

REVISION DATES	SHEET	OF
	X	X

FILE => /2014sd/04-2j0701/04-2j0701_ses-5

USERNAME => s126849 DATE PLOTTED => 18-AUG-2015 TIME PLOTTED => 12:56

DIST	COUNTY	ROUTE	POST MILES TOTAL PROJECT	SHEET No	TOTAL SHEETS
04	Ala	880	2.9/27.3	834	906

Mahfoud A Licha 8/12/15
REGISTERED CIVIL ENGINEER DATE

6-22-15
PLANS APPROVAL DATE

REGISTERED PROFESSIONAL ENGINEER MAHFOUD A. LICHA No. C62816 Exp. 6/30/16 CIVIL STATE OF CALIFORNIA

The State of California or its officers or agents shall not be responsible for the accuracy or completeness of electronic copies of this plan sheet.

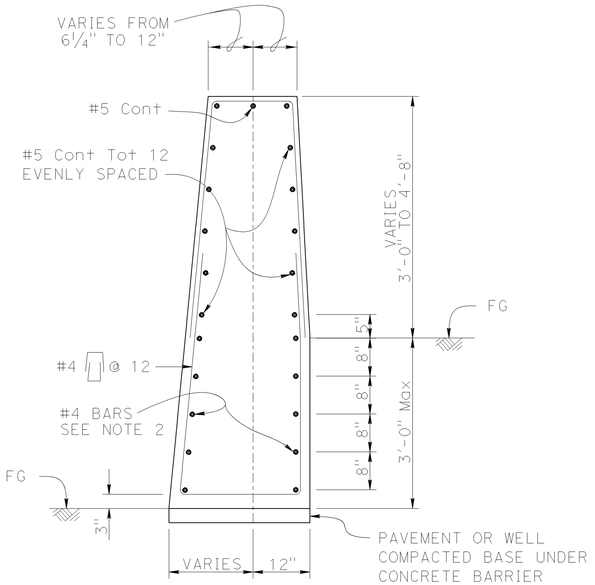

SECTION K-K

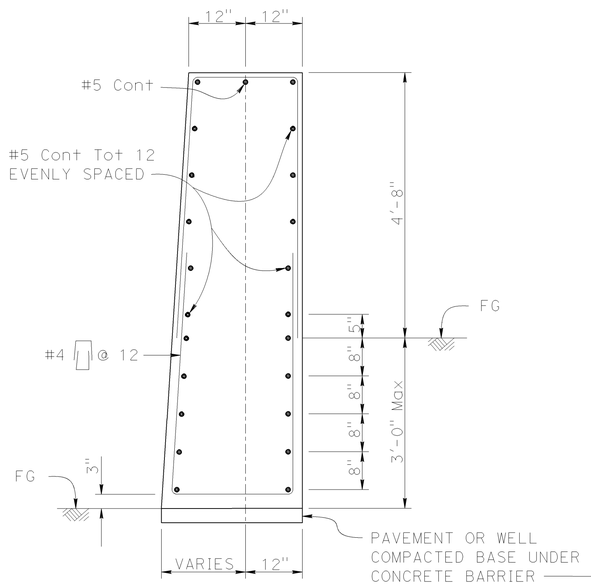

SECTION L-L

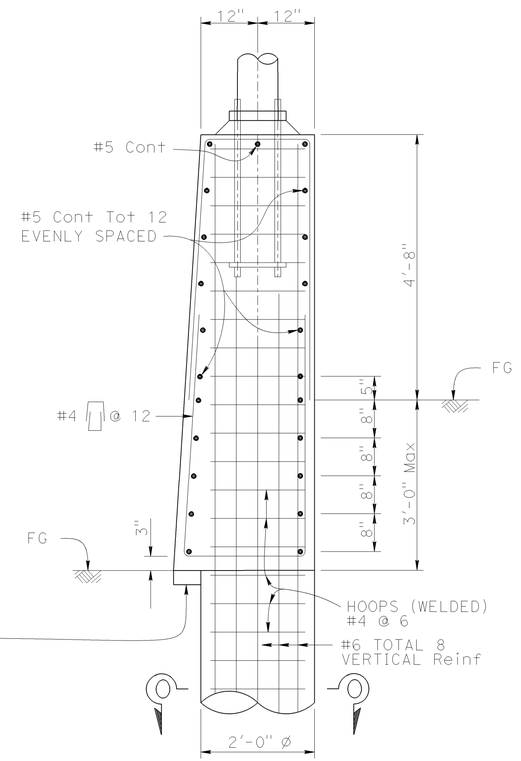

SECTION M-M

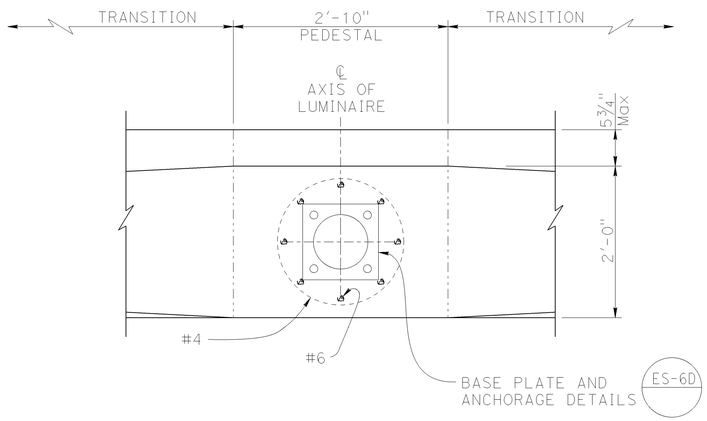

SECTION N-N

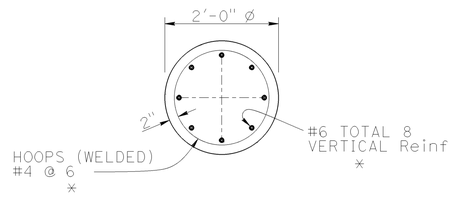

SECTION O-O
(SEE NOTE 1)

* #6 VERTICAL Reinf AND #4 WELDED HOOPS MUST BE PLACED TO 3" BELOW TOP OF BARRIER

NOTES:

1. For inspection tube details, see 2010 Standard Plans ES-7N, Detail I

2. For roadbed surfaces offset greater than 1½" and less than or equal to 3", no rebars required. For roadbed surfaces offset greater than 3" and less than or equal to 8", use two #4 rebars at 3" above the lower roadbed surface. For roadbed surfaces offset greater than 8" and less than or equal to 12", use two #4 rebars at 3" above the lower roadbed surface and two #4 rebars at 8" above the lower roadbed surface. For roadbed surfaces offset greater than 12" and less than or equal to 36", use two #4 rebars at 3" above the lower roadbed surface and two #4 rebars at every 8" increment vertical spacing above the first two #4 rebars.

NOTE:
THE CONTRACTOR MUST VERIFY ALL CONTROLLING FIELD DIMENSIONS BEFORE ORDERING OR FABRICATING ANY MATERIAL.

STANDARD PLAN SHEET No.
DETAIL No.

NO SCALE

BRANCH CHIEF *JEFF WOODY*

	BY	CHECKED
DESIGN	M.LICHA	J.DATILES
DETAILS	M.CLEVERLEY	M.LICHA
QUANTITIES	X	X

STATE OF **CALIFORNIA** DEPARTMENT OF TRANSPORTATION

DIVISION OF ENGINEERING SERVICES DESIGN AND TECHNICAL SERVICES
SPECIAL DESIGNS BRANCH **A**

BRIDGE NO. N/A
POST MILE 2.9/27.3

TYPE 60C BARRIER (MODIFIED)
BARRIER TRANSITION DETAILS

SES-6

(ENGLISH) SPECIAL DESIGNS BRANCH BORDER SHEET (REV. 4-1-14)

ORIGINAL SCALE IN INCHES FOR REDUCED PLANS 0 1 2 3

UNIT: 3619
PROJECT NUMBER & PHASE: 0414000421-1 CONTRACT NO.: 04-2j0704

DISREGARD PRINTS BEARING EARLIER REVISION DATES →

REVISION DATES				SHEET	OF
				X	X

FILE => /2014sd/04-2j0701/04-2j0701_ses6.dgn

USERNAME => s126849 DATE PLOTTED => 18-AUG-2015 TIME PLOTTED => 13:03

DIST	COUNTY	ROUTE	POST MILES TOTAL PROJECT	SHEET No	TOTAL SHEETS
04	Ala	880	2.9/27.3	835	906

Mahfoud A Licha 8/12/15
REGISTERED CIVIL ENGINEER DATE

6-22-15
PLANS APPROVAL DATE

REGISTERED PROFESSIONAL ENGINEER MAHFOUD A. LICHA No. C62816 Exp. 6/30/16 CIVIL STATE OF CALIFORNIA

The State of California or its officers or agents shall not be responsible for the accuracy or completeness of electronic copies of this plan sheet.

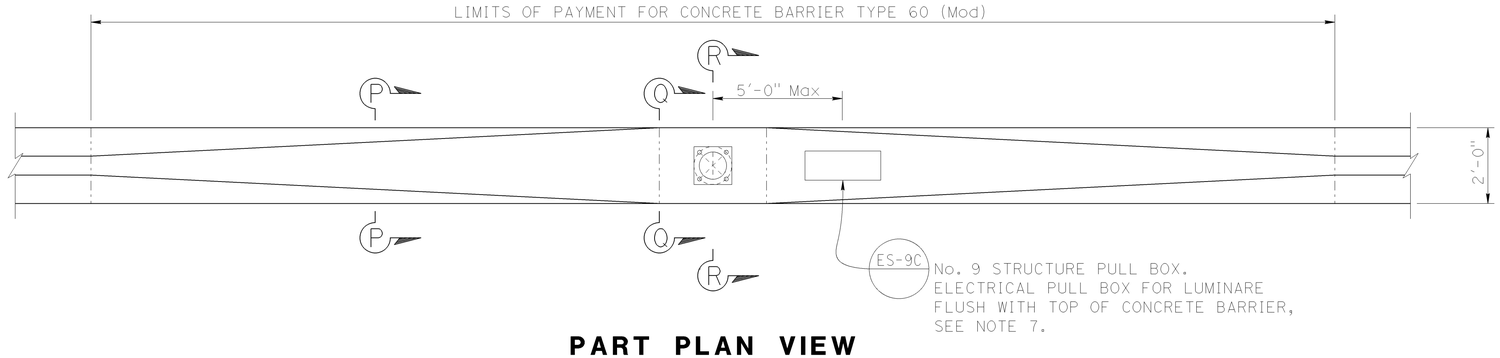

PART PLAN VIEW

NOTE: BOTH SIDES SIMILAR

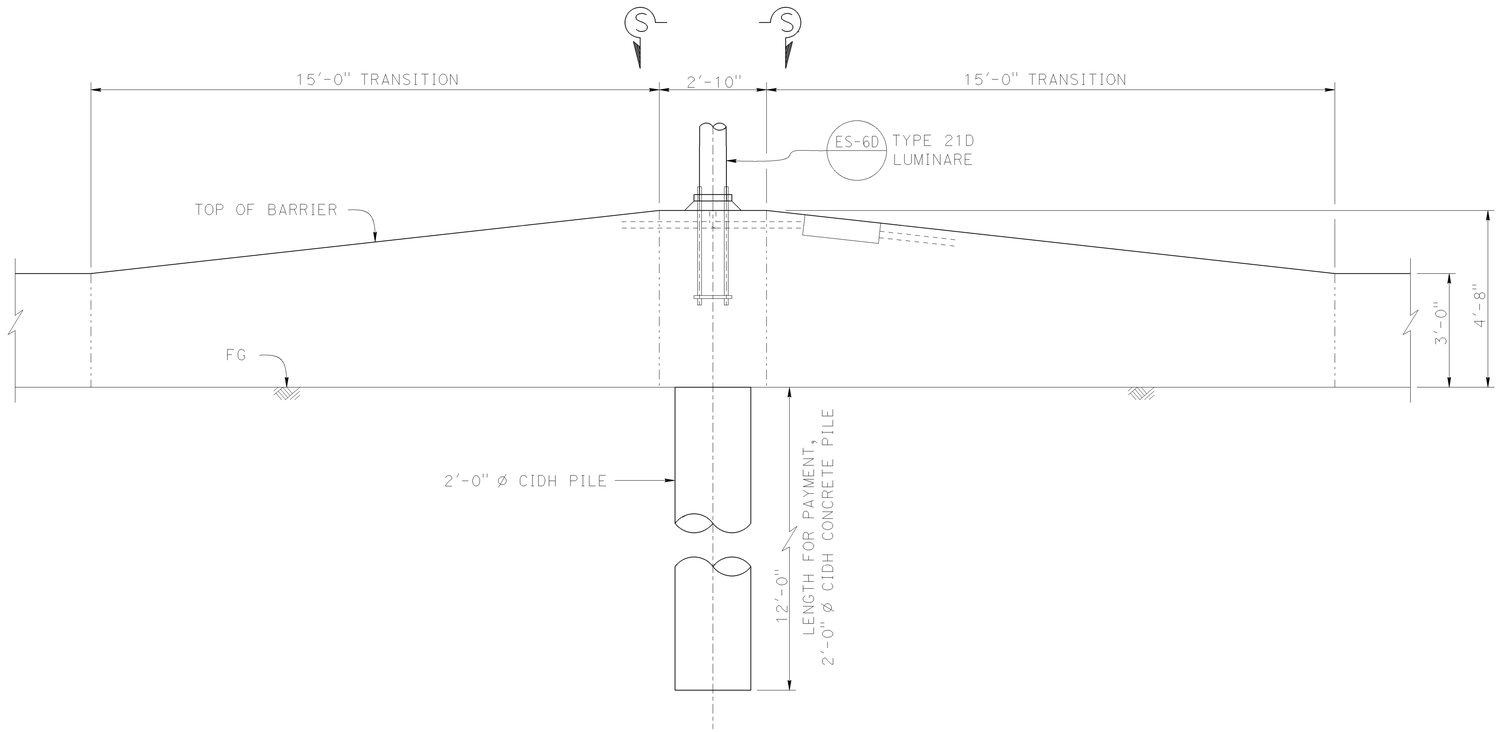

PART ELEVATION

NOTE: BOTH SIDES SIMILAR

GENERAL NOTES:

SPECIFICATIONS

Design: AASHTO Standard Specifications for Structural Supports for Highway Signs, Luminaires and Traffic Signals, Sixth Edition.

LOADING

Wind Loadings: 100 MPH (3 Second gust)

UNIT STRESSES

Structural Steel: fy = 55,000 psi tapered steel tube
fy = 50,000 psi unless otherwise noted

Anchor Bolts: fy = 55 ksi

Reinforced Concrete: f'c = 3,600 psi
fy = 60,000 psi

NOTES:

1. For "SECTION P-P", "SECTION Q-Q", "SECTION R-R" and "SECTION S-S", see SES-8.
2. For pole location, see "ROADWAY PLANS".
3. All steel must be galvanized after fabrication.
4. During pole erection the post shall be raked as necessary with the use of leveling nuts to provide a plumb pole axis.
5. Barrier height varies, see "ROADWAY PLANS". Barrier height must be 4'-8" minimum at Type 21D Luminaire locations.
6. For details not show, see "STANDARD PLANS 2010" and "REVISED STANDARD PLANS 2010".
7. For details not shown see "ROADWAY PLANS".

NOTE:
THE CONTRACTOR MUST VERIFY ALL CONTROLLING FIELD DIMENSIONS BEFORE ORDERING OR FABRICATING ANY MATERIAL.

STANDARD PLAN SHEET No.
DETAIL No.

NO SCALE

TYPE 21D LUMINAIRE
TYPE 60 BARRIER (MODIFIED)
BARRIER TRANSITION

SES-7

BRANCH CHIEF *JEFF WOODY*

	BY	CHECKED
DESIGN	M.LICHA	J.DATILES
DETAILS	M.CLEVERLEY	M.LICHA
QUANTITIES	X	X

STATE OF CALIFORNIA
DEPARTMENT OF TRANSPORTATION

DIVISION OF ENGINEERING SERVICES
DESIGN AND TECHNICAL SERVICES
SPECIAL DESIGNS BRANCH **A**

BRIDGE NO. N/A
POST MILE 2.9/27.3

(ENGLISH) SPECIAL DESIGNS BRANCH BORDER SHEET (REV. 4-1-14)

ORIGINAL SCALE IN INCHES FOR REDUCED PLANS 0 1 2 3

UNIT: 3619
PROJECT NUMBER & PHASE: 0414000421-1 CONTRACT NO.: 04-2j0704

DISREGARD PRINTS BEARING EARLIER REVISION DATES →

REVISION DATES					SHEET	OF
					X	X

FILE => /2014sd/04-2j0701/04-2j0701_ses-7

USERNAME => s126849 DATE PLOTTED => 18-AUG-2015 TIME PLOTTED => 13:03

DIST	COUNTY	ROUTE	POST MILES TOTAL PROJECT	SHEET No	TOTAL SHEETS
04	Ala	880	2.9/27.3	836	906

Mahfoud A Licha 8/12/15
REGISTERED CIVIL ENGINEER DATE

6-22-15
PLANS APPROVAL DATE

REGISTERED PROFESSIONAL ENGINEER
MAHFOUD A. LICHA
No. C62816
Exp. 6/30/16
CIVIL
STATE OF CALIFORNIA

The State of California or its officers or agents shall not be responsible for the accuracy or completeness of electronic copies of this plan sheet.

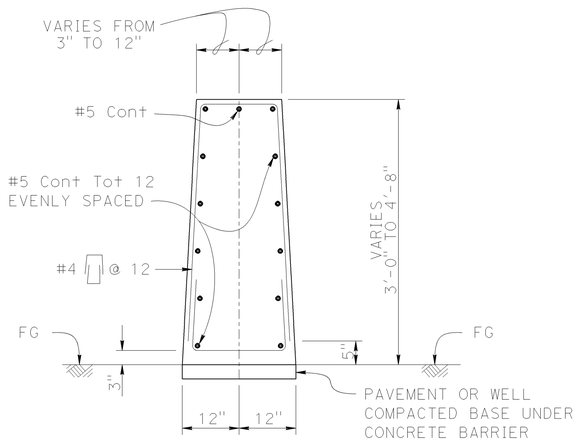

SECTION P-P

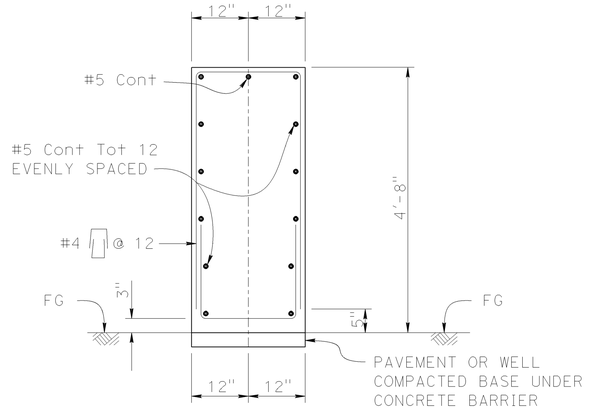

SECTION Q-Q

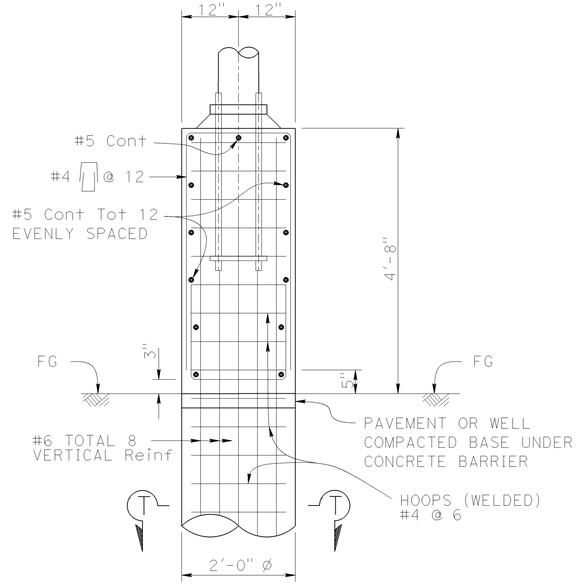

SECTION R-R

NOTES:

1. For inspection tube details, see 2010 Standard Plans ES-7N, Detail I

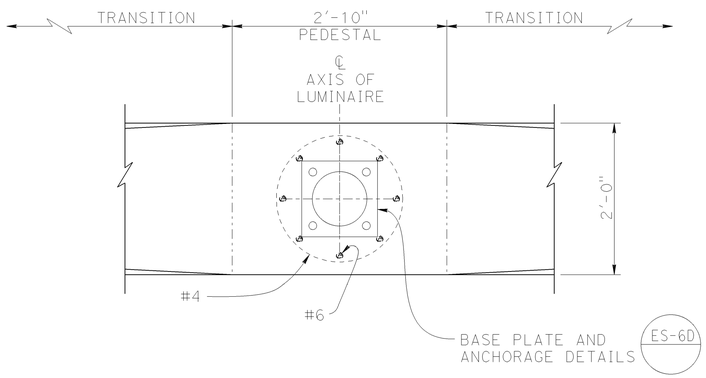

SECTION S-S

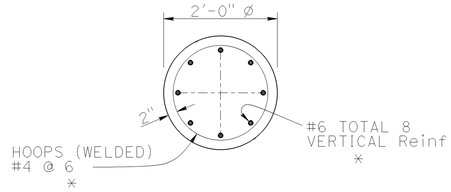

SECTION T-T
(SEE NOTE 1)

* #6 VERTICAL Reinf AND #4 WELDED HOOPS MUST BE PLACED TO 3" BELOW TOP OF BARRIER

NOTE:
THE CONTRACTOR MUST VERIFY ALL CONTROLLING FIELD DIMENSIONS BEFORE ORDERING OR FABRICATING ANY MATERIAL.

STANDARD PLAN SHEET No.
DETAIL No.

NO SCALE

BRANCH CHIEF *JEFF WOODY*

	BY	CHECKED
DESIGN	M.LICHA	J.DATILES
DETAILS	M.CLEVERLEY	M.LICHA
QUANTITIES	X	X

STATE OF
CALIFORNIA
DEPARTMENT OF TRANSPORTATION

DIVISION OF ENGINEERING SERVICES
DESIGN AND TECHNICAL SERVICES
SPECIAL DESIGNS BRANCH **A**

BRIDGE NO. N/A
POST MILE 2.9/27.3

TYPE 60 BARRIER (MODIFIED)
BARRIER TRANSITION DETAILS

SES-8

(ENGLISH) SPECIAL DESIGNS BRANCH BORDER SHEET (REV. 4-1-14)

ORIGINAL SCALE IN INCHES FOR REDUCED PLANS 0 1 2 3

UNIT: 3619
PROJECT NUMBER & PHASE: 0414000421-1 CONTRACT NO.: 04-2j0704

DISREGARD PRINTS BEARING EARLIER REVISION DATES →

REVISION DATES				SHEET	OF
				X	X

FILE => /2014sd/04-2j0701/04-2j0701_ses8.dgn

USERNAME => s126849 DATE PLOTTED => 18-AUG-2015 TIME PLOTTED => 13:05

DIST	COUNTY	ROUTE	POST MILES TOTAL PROJECT	SHEET No	TOTAL SHEETS
04	Ala	880	2.9/27.3	837	906

Mahfoud A Licha 8/12/15
REGISTERED CIVIL ENGINEER DATE

6-22-15
PLANS APPROVAL DATE

REGISTERED PROFESSIONAL ENGINEER
MAHFOUD A. LICHA
No. C62816
Exp. 6/30/16
CIVIL
STATE OF CALIFORNIA

The State of California or its officers or agents shall not be responsible for the accuracy or completeness of electronic copies of this plan sheet.

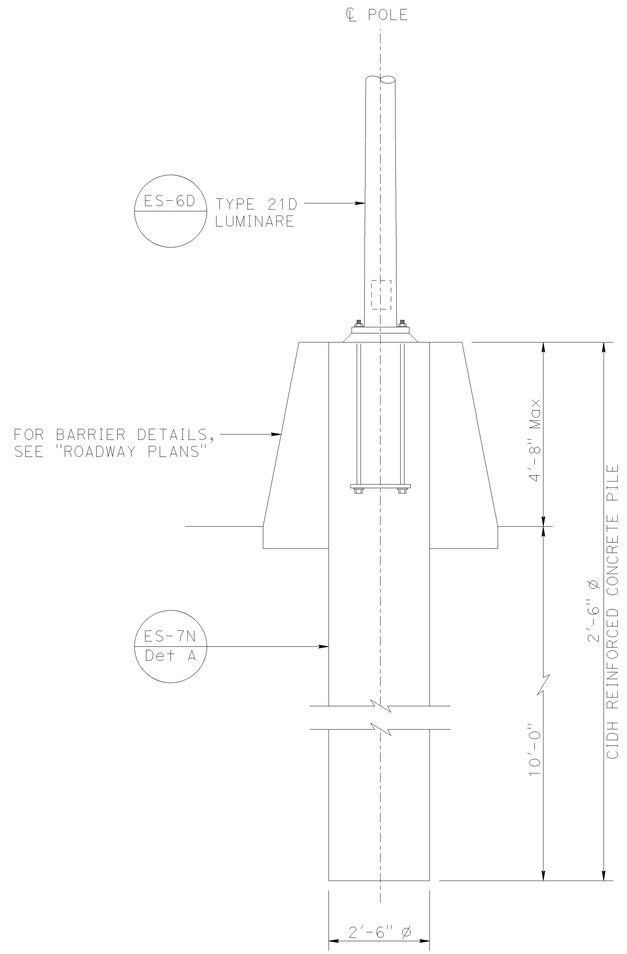

TYPE 21D MEDIAN BARRIER MOUNTED

ELEVATION

GENERAL NOTES:

SPECIFICATIONS

Design: AASHTO Standard Specifications for Structural Supports for Highway Signs, Luminaires and Traffic Signals, Sixth Edition.

LOADING

Wind Loadings: 100 MPH (3 Second gust)

UNIT STRESSES

Structural Steel: fy = 55,000 psi tapered steel tube
fy = 50,000 psi unless otherwise noted

Anchor Bolts: fy = 55 ksi

Reinforced Concrete: f'c = 3,600 psi
fy = 60,000 psi

NOTES:

1. For pole location, see "ROADWAY PLANS".
2. All steel must be galvanized after fabrication.
3. During pole erection the post shall be raked as necessary with the use of leveling nuts to provide a plumb pole axis.
4. For details not show, see "STANDARD PLANS 2010" and "REVISED STANDARD PLANS 2010".
5. For details not shown see "ROADWAY PLANS".

STANDARD PLAN SHEET No.
DETAIL No.

NOTE:
THE CONTRACTOR MUST VERIFY ALL CONTROLLING FIELD DIMENSIONS BEFORE ORDERING OR FABRICATING ANY MATERIAL.

NO SCALE

TYPE 21D LUMINAIRE
MEDIAN BARRIER MOUNTED
FOUNDATION DETAILS

SES-9

BRANCH CHIEF *JEFF WOODY*

	BY	CHECKED
DESIGN	M.LICHA	J.DATILES
DETAILS	M.CLEVERLEY	M.LICHA
QUANTITIES	X	X

STATE OF CALIFORNIA
DEPARTMENT OF TRANSPORTATION

DIVISION OF ENGINEERING SERVICES
DESIGN AND TECHNICAL SERVICES
SPECIAL DESIGNS BRANCH **A**

BRIDGE NO. N/A
POST MILE 2.9/27.3

(ENGLISH) SPECIAL DESIGNS BRANCH BORDER SHEET (REV. 4-1-14)

ORIGINAL SCALE IN INCHES FOR REDUCED PLANS 0 1 2 3

UNIT: 3619
PROJECT NUMBER & PHASE: 0414000421-1 CONTRACT NO.: 04-2j0704

DISREGARD PRINTS BEARING EARLIER REVISION DATES →

REVISION DATES				SHEET	OF
				X	X

FILE => /2014sd/04-2j0701/04-2j0701_ses-9

USERNAME => s126849 DATE PLOTTED => 18-AUG-2015 TIME PLOTTED => 13:05

DIST	COUNTY	ROUTE	POST MILES TOTAL PROJECT	SHEET No.	TOTAL SHEETS
04	Ala	880	2.9/27.3	838	906

REGISTERED CIVIL ENGINEER — 8-12-15 DATE

6-22-15 PLANS APPROVAL DATE

REGISTERED PROFESSIONAL ENGINEER — YU SONG No. C71687 Exp. 12/31/15 CIVIL — STATE OF CALIFORNIA

The State of California or its officers or agents shall not be responsible for the accuracy or completeness of scanned copies of this plan sheet.

PLAN

Scale 1" = 1'

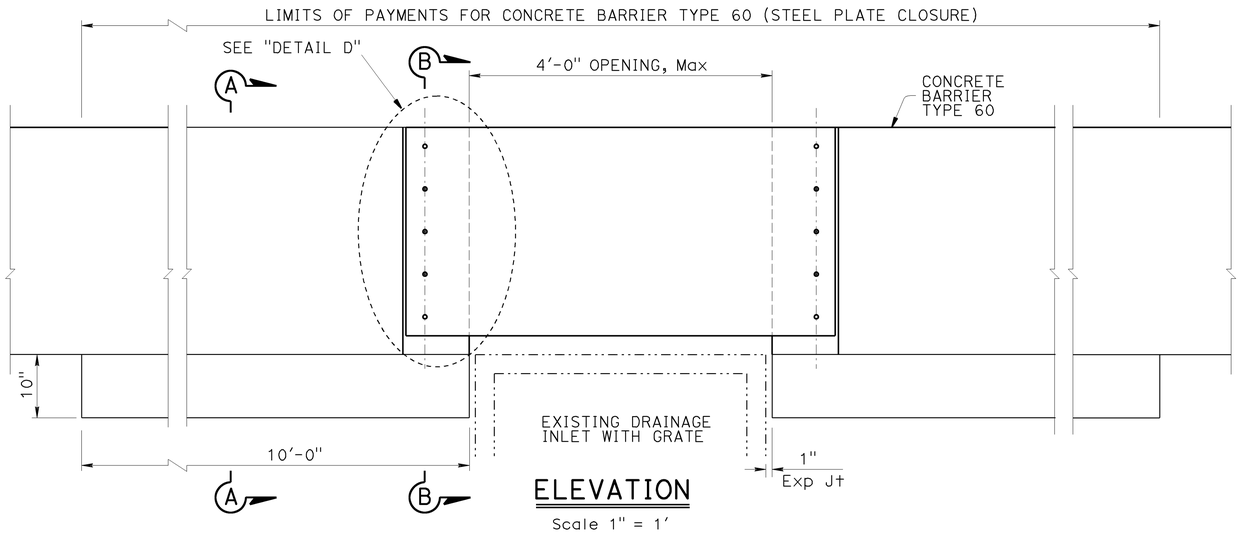

ELEVATION

Scale 1" = 1'

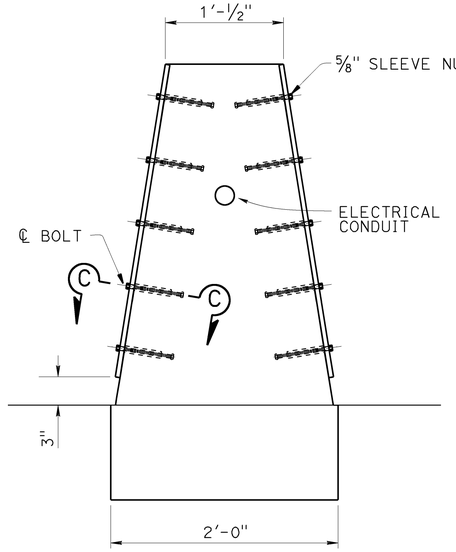

SECTION B-B

Scale 1½" = 1'

Notes:

1. Barrier rebars not shown for clarity.
2. See Electrical Plans for electrical conduit details.

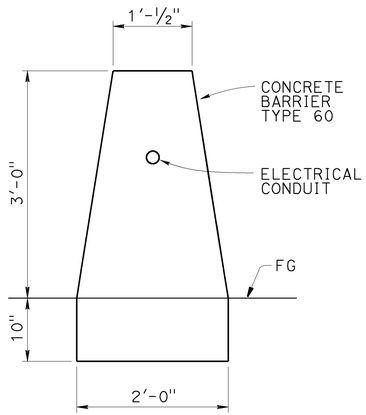

SECTION A-A

Scale 1" = 1'

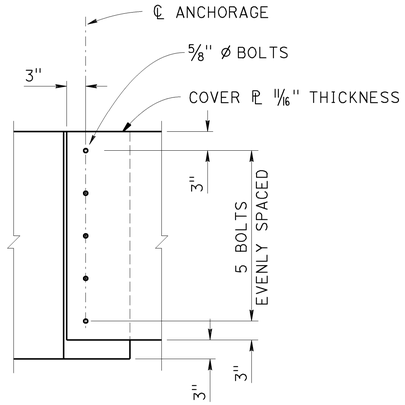

DETAIL D

Scale 1" = 1'

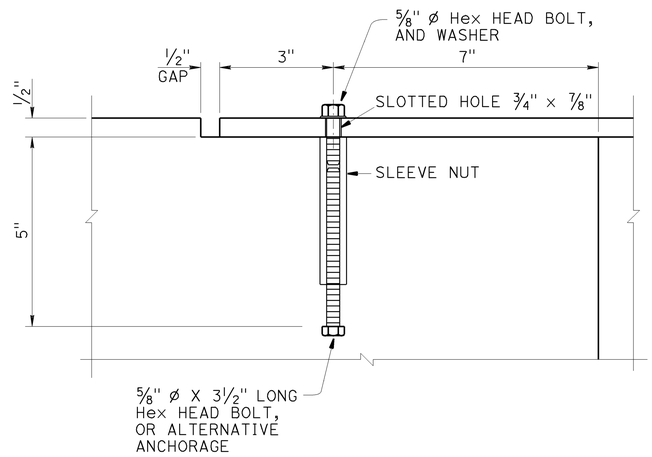

SECTION C-C

Scale 6" = 1'

NOTE:
THE CONTRACTOR MUST VERIFY ALL CONTROLLING FIELD DIMENSIONS BEFORE ORDERING OR FABRICATING ANY MATERIAL.

Legend:

Indicates existing structure

Indicates new structure

DAVID NEUMANN
BRANCH CHIEF

DESIGN	BY YU SONG	CHECKED MAHFOUD LICHA	LOAD & RESISTANCE FACTOR DESIGN	LIVE LOADING: HL93 W/"LOW-BOY"; PERMIT DESIGN VEHICLE	
DETAILS	BY HUNG NGUYEN	CHECKED YU SONG	LAYOUT	BY	CHECKED
QUANTITIES	BY	CHECKED	SPECIFICATIONS	BY X	PLANS AND SPECS COMPARED X

ORIGINAL SCALE IN INCHES FOR REDUCED PLANS 0 1 2 3

STATE OF CALIFORNIA
DEPARTMENT OF TRANSPORTATION

DIVISION OF ENGINEERING SERVICES
STRUCTURE DESIGN
DESIGN BRANCH B

UNIT: 3619
PROJECT NUMBER & PHASE: 0414000421
CONTRACT NO.: 04-2J0701

BRIDGE NO. VARIES
POST MILE 2.9/27.3

CONCRETE BARRIER TYPE 60
STEEL PLATE CLOSURE

SES-10

DISREGARD PRINTS BEARING EARLIER REVISION DATES →

REVISION DATES	SHEET	OF
12/17/14		

STRUCTURES DESIGN GENERAL PLAN SHEET (ENGLISH) (REV.09-01-10)

FILE => 04-2j0701-u-ses10.dgn

USERNAME => s12684# DATE PLOTTED => 18-AUG-2015 TIME PLOTTED => 13:05

DIST	COUNTY	ROUTE	POST MILES TOTAL PROJECT	SHEET No.	TOTAL SHEETS
04	Ala	880	2.9/27.3	839	906

REGISTERED CIVIL ENGINEER 8-12-15 DATE

6-22-15
PLANS APPROVAL DATE

REGISTERED PROFESSIONAL ENGINEER YU SONG No. C71687 Exp. 12/31/15 CIVIL STATE OF CALIFORNIA

The State of California or its officers or agents shall not be responsible for the accuracy or completeness of scanned copies of this plan sheet.

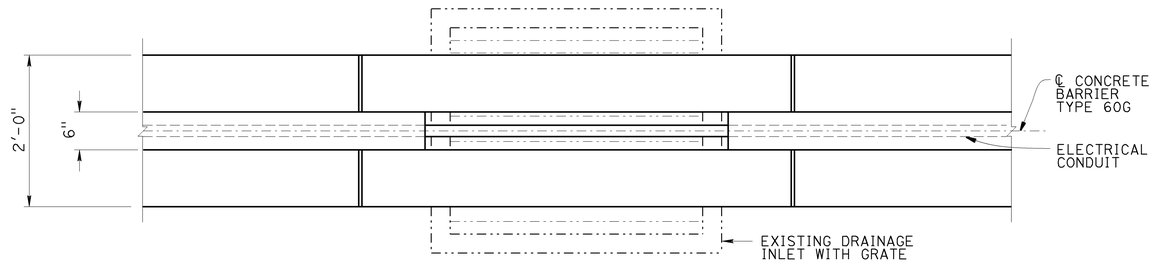

PLAN
Scale 1" = 1'

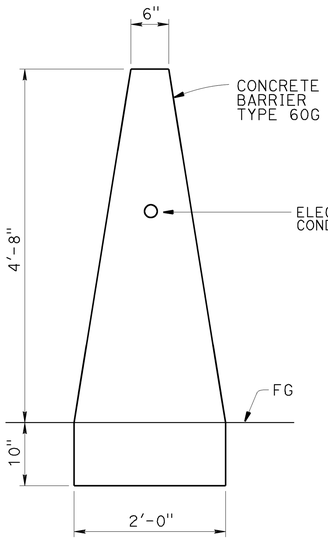

SECTION A-A
Scale 1" = 1'

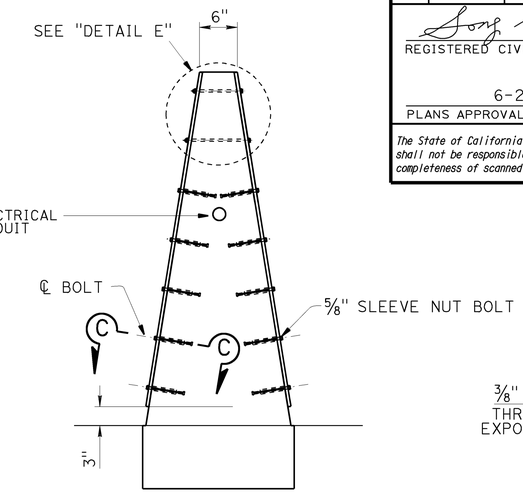

SECTION B-B
Scale 1" = 1'

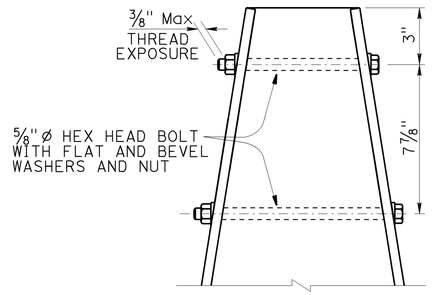

DETAIL E
Scale 3" = 1'

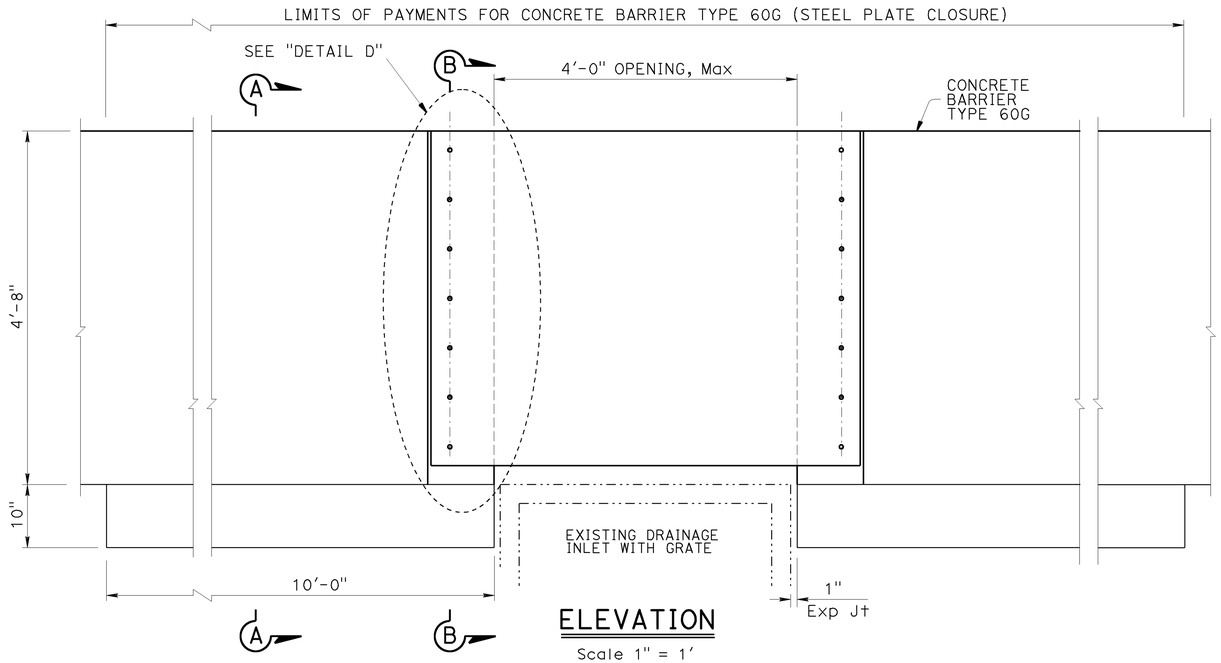

ELEVATION
Scale 1" = 1'

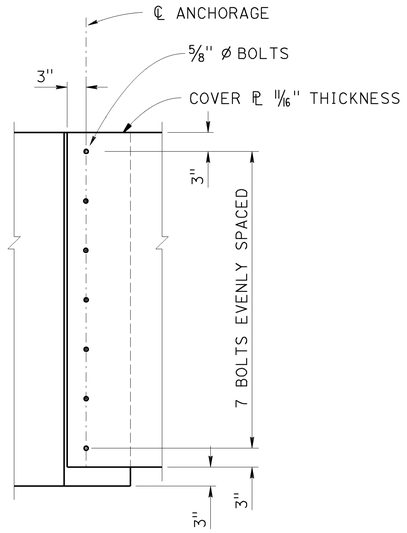

DETAIL D
Scale 1" = 1'

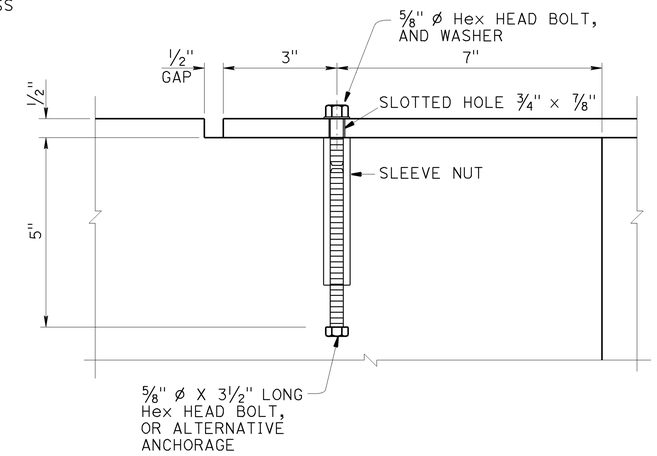

SECTION C-C
Scale 6" = 1'

NOTE:
THE CONTRACTOR MUST VERIFY ALL CONTROLLING FIELD DIMENSIONS BEFORE ORDERING OR FABRICATING ANY MATERIAL.

Notes:
1. Barrier rebars not shown for clarity.
2. See Electrical Plans for electrical conduit details.

Legend:
-··-··-··- Indicates existing structure
——— Indicates new structure

DAVID NEUMANN
BRANCH CHIEF

	BY	CHECKED
DESIGN	YU SONG	MAHFOUD LICHA
DETAILS	HUNG NGUYEN	YU SONG
QUANTITIES		

STATE OF CALIFORNIA
DEPARTMENT OF TRANSPORTATION

DIVISION OF ENGINEERING SERVICES
STRUCTURE DESIGN
DESIGN BRANCH B

BRIDGE NO. VARIES
POST MILE 2.9/27.3

CONCRETE BARRIER TYPE 60G
STEEL PLATE CLOSURE

SES-11

ORIGINAL SCALE IN INCHES FOR REDUCED PLANS 0 1 2 3

UNIT: 3619
PROJECT NUMBER & PHASE: 0414000421
CONTRACT NO.: 04-2J0701

DISREGARD PRINTS BEARING EARLIER REVISION DATES 12/17/14

REVISION DATES SHEET OF

STRUCTURES DESIGN GENERAL PLAN SHEET (ENGLISH) (REV.09-01-10)

FILE => 04-2j0701-u-ses11.dgn

USERNAME => s126849 DATE PLOTTED => 18-AUG-2015 TIME PLOTTED => 13:06

DIST	COUNTY	ROUTE	POST MILES TOTAL PROJECT	SHEET No.	TOTAL SHEETS
04	Ala	880	2.9/27.3	840	906

REGISTERED CIVIL ENGINEER — 8-12-15 DATE

YU SONG No. C71687 Exp. 12/31/15 CIVIL — REGISTERED PROFESSIONAL ENGINEER — STATE OF CALIFORNIA

6-22-15
PLANS APPROVAL DATE

The State of California or its officers or agents shall not be responsible for the accuracy or completeness of scanned copies of this plan sheet.

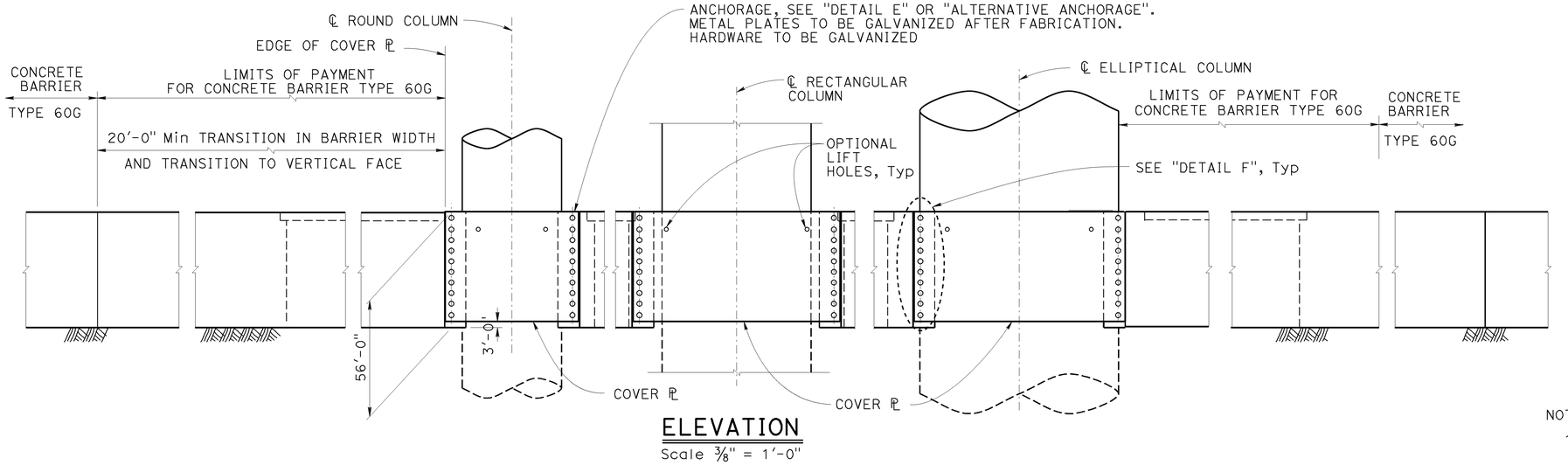

ELEVATION
Scale 3/8" = 1'-0"

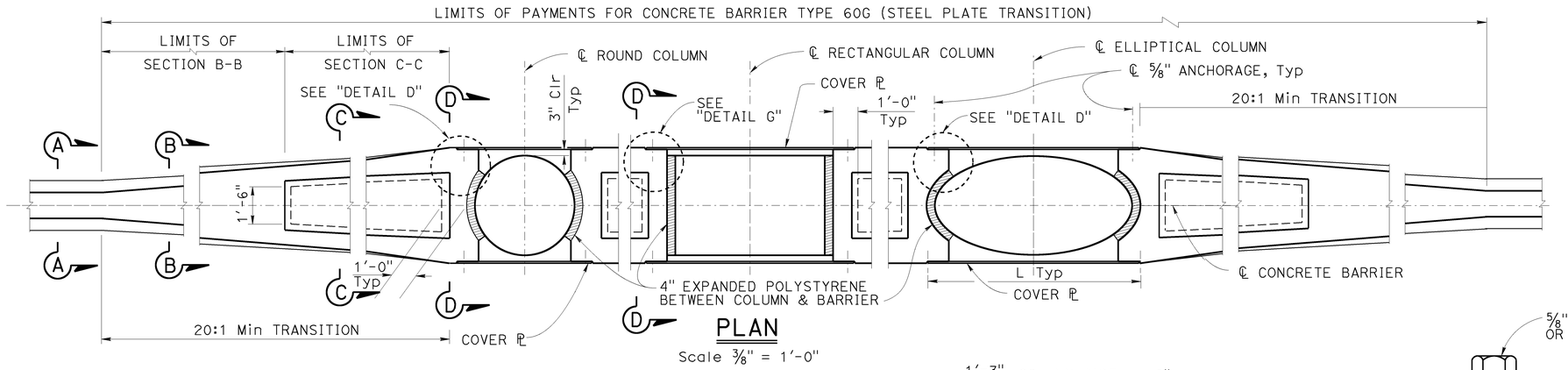

PLAN
Scale 3/8" = 1'-0"

NOTES:
1. For "DETAIL D", "DETAIL F", "DETAIL G" and "TABLE 1" see "BARRIER-CONCRETE TYPE 60G, TRANSITION AT BRIDGE COLUMN - DETAILS NO. 2" sheet
2. For cover plate length see "TABLE 1" on "TRANSITION AT BRIDGE COLUMN-DETAILS NO. 2" sheet
3. Adjust height of concrete barriers wall on low side of offset or superelevated roadways to provide level grade across top of concrete barrier cap.

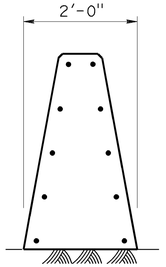

SECTION A-A
Scale 3/4" = 1'-0"

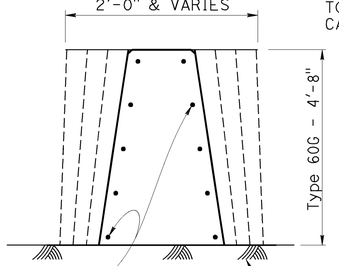

SECTION B-B
Scale 3/4" = 1'-0"

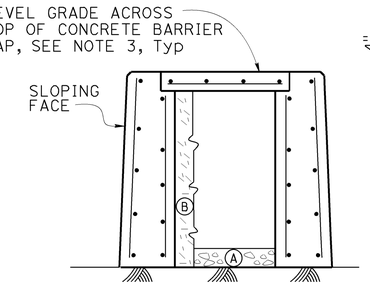

SECTION C-C
Scale 3/4" = 1'-0"

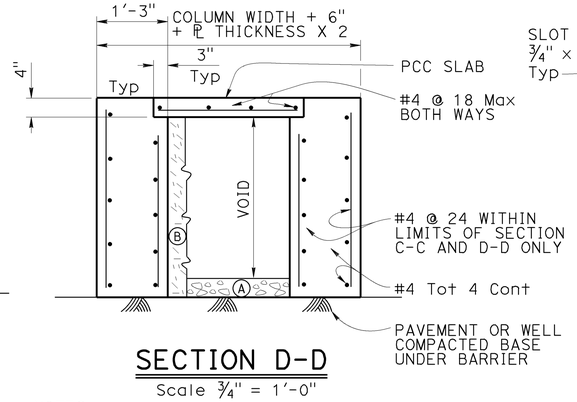

SECTION D-D
Scale 3/4" = 1'-0"

NOTES:
1. Contractor options for fill between barrier walls
   - Ⓐ Place 4" PCC at base between barrier walls
   - Ⓑ Place granular material from base to bottom of 4" cap

NOTE:
THE CONTRACTOR MUST VERIFY ALL CONTROLLING FIELD DIMENSIONS BEFORE ORDERING OR FABRICATING ANY MATERIAL.

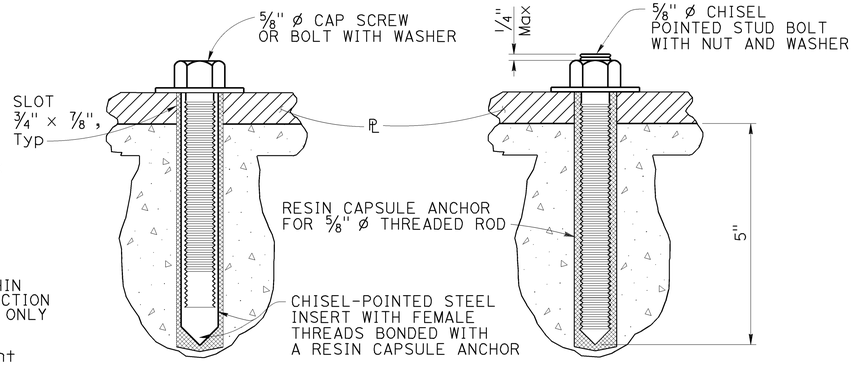

ALTERNATIVE ANCHORAGE
NO SCALE

DAVID NEUMANN
BRANCH CHIEF

	BY	CHECKED
DESIGN	YU SONG	MAHFOUD LICHA
DETAILS	HUNG NGUYEN	YU SONG
QUANTITIES	BY	CHECKED

STATE OF CALIFORNIA
DEPARTMENT OF TRANSPORTATION

DIVISION OF ENGINEERING SERVICES
STRUCTURE DESIGN
DESIGN BRANCH B

BRIDGE NO. VARIES
POST MILE 2.9/27.3

CONCRETE BARRIER TYPE 60G
STEEL PLATE TRANSITION No. 1

SES-12

ORIGINAL SCALE IN INCHES FOR REDUCED PLANS 0 1 2 3

UNIT: 3619
PROJECT NUMBER & PHASE: 0414000421
CONTRACT NO.: 04-2J0701

DISREGARD PRINTS BEARING EARLIER REVISION DATES

REVISION DATES	SHEET	OF
12/17/14		

STRUCTURES DESIGN GENERAL PLAN SHEET (ENGLISH) (REV.09-01-10)

FILE => 04-2J0701-u-ses12.dgn

USERNAME => s1266413 DATE PLOTTED => 16-AUG-2015 TIME PLOTTED => 13:06

DIST	COUNTY	ROUTE	POST MILES TOTAL PROJECT	SHEET No.	TOTAL SHEETS
04	Ala	880	2.9/27.3	841	906

REGISTERED CIVIL ENGINEER — 8-12-15 DATE

6-22-15
PLANS APPROVAL DATE

REGISTERED PROFESSIONAL ENGINEER — YU SONG No. C71687 Exp. 12/31/15 CIVIL — STATE OF CALIFORNIA

The State of California or its officers or agents shall not be responsible for the accuracy or completeness of electronic copies of this plan sheet.

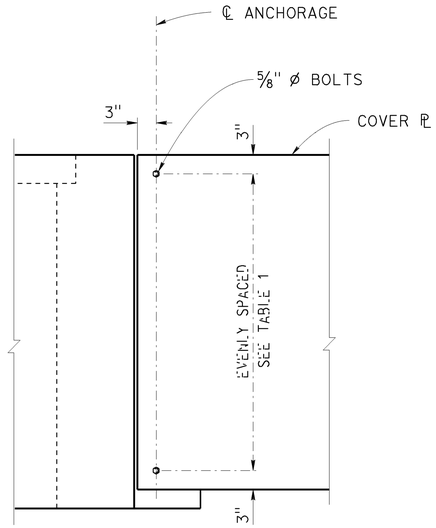

DETAIL F

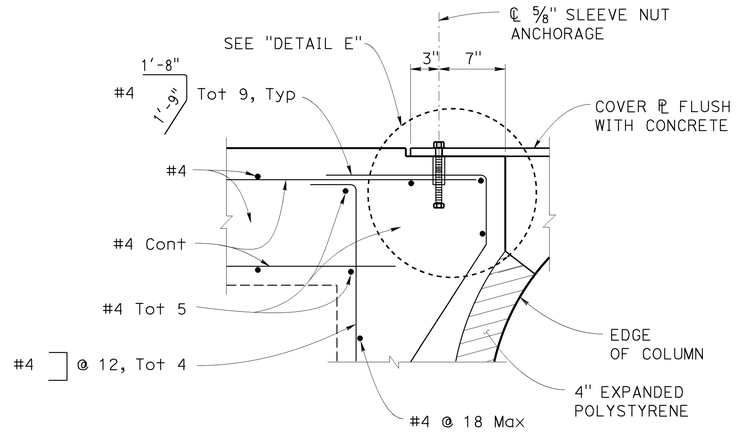

DETAIL D

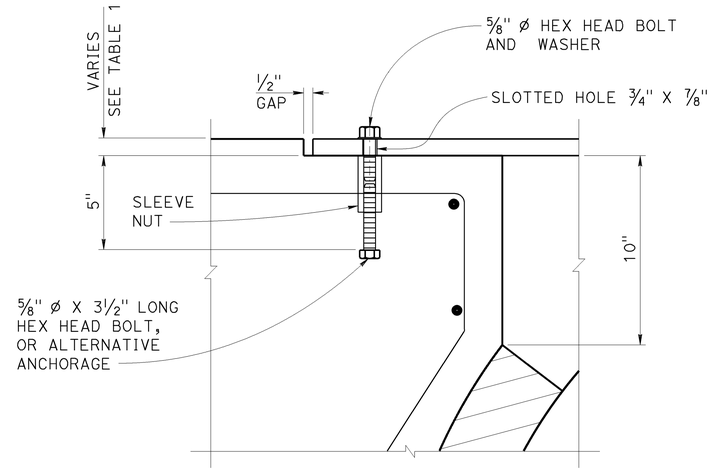

DETAIL E

TABLE 1		
L (ft)	PLATE THICKNESS (in)	TOTAL NO. OF BOLTS
8'-6" Max	7/8	10
6'-6" Max	11/16	7
4'-6" Max	7/16	5

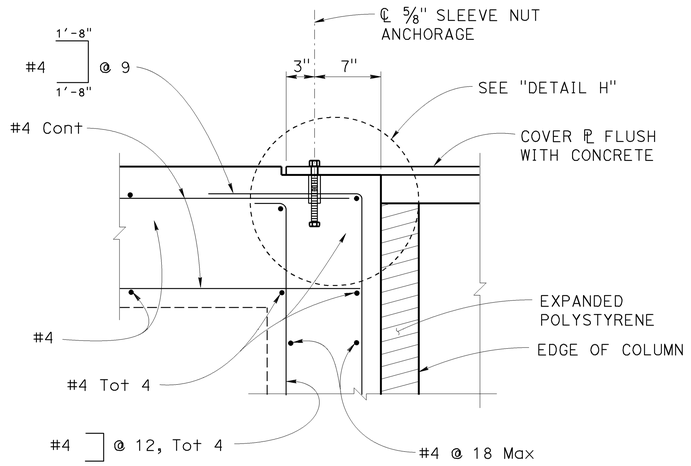

DETAIL G

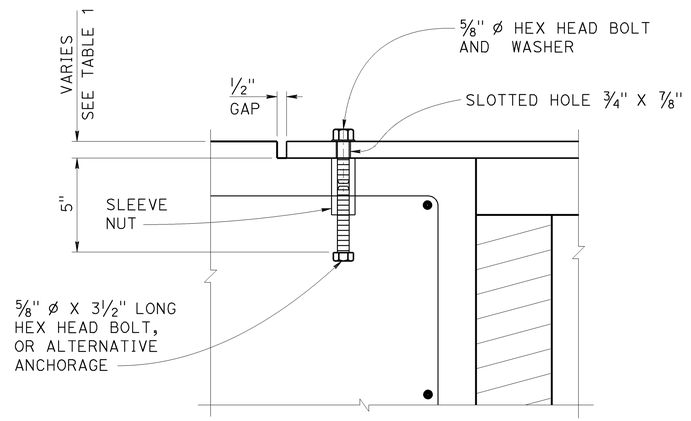

DETAIL H

NOTE:
THE CONTRACTOR MUST VERIFY ALL CONTROLLING FIELD DIMENSIONS BEFORE ORDERING OR FABRICATING ANY MATERIAL.

NOTE:
Structural steel, f_y = 50,000 psi
Unless otherwise noted

NO SCALE

DAVID NEUMANN
BRANCH CHIEF

DESIGN	BY YU SONG	CHECKED MAHFOUD LICHA
DETAILS	BY HUNG NGUYEN	CHECKED YU SONG
QUANTITIES	BY	CHECKED

STATE OF CALIFORNIA
DEPARTMENT OF TRANSPORTATION

DIVISION OF ENGINEERING SERVICES
STRUCTURE DESIGN
DESIGN BRANCH B

BRIDGE NO. VARIES
POST MILE 2.9/27.3

CONCRETE BARRIER TYPE 60G
STEEL PLATE TRANSITION No. 2

SES-13

STRUCTURES DESIGN GENERAL PLAN SHEET (ENGLISH) (REV.09-01-10)

ORIGINAL SCALE IN INCHES FOR REDUCED PLANS 0 1 2 3

UNIT: 3619
PROJECT NUMBER & PHASE: 0414000421
CONTRACT NO.: 04-2J0701

DISREGARD PRINTS BEARING EARLIER REVISION DATES →

REVISION DATES						SHEET	OF
12/17/14							

FILE => 04-2j0701-u-ses13.dgn

USERNAME => s126843 DATE PLOTTED => 18-AUG-2015 TIME PLOTTED => 13:06

DIST	COUNTY	ROUTE	POST MILES TOTAL PROJECT	SHEET No.	TOTAL SHEETS
04	Ala	880	2.9/27.3	842	906

REGISTERED CIVIL ENGINEER — 8-12-15 DATE

6-22-15
PLANS APPROVAL DATE

REGISTERED PROFESSIONAL ENGINEER — YU SONG No. C71687 Exp. 12/31/15 CIVIL — STATE OF CALIFORNIA

The State of California or its officers or agents shall not be responsible for the accuracy or completeness of scanned copies of this plan sheet.

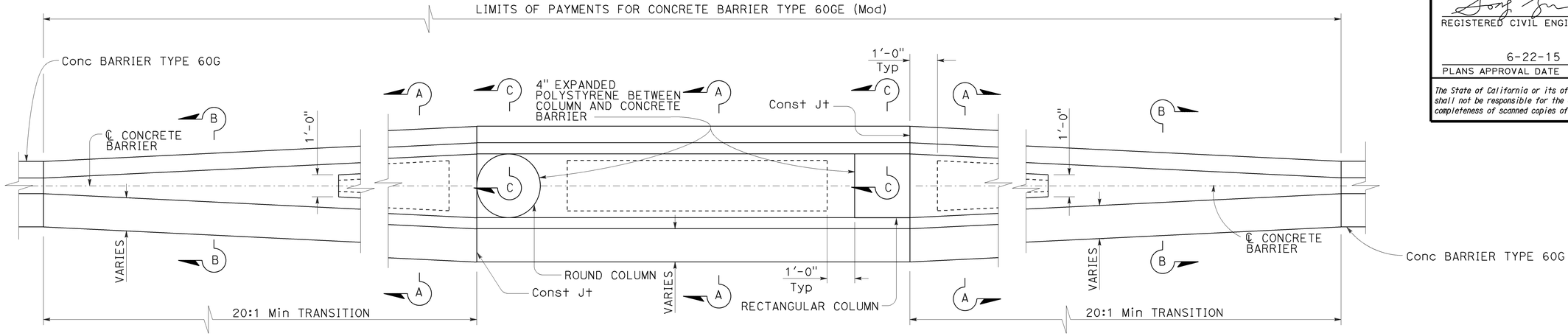

TRANSITION AT BRIDGE COLUMNS

Concrete Barrier Type 60GE
Scale 1" = 1'

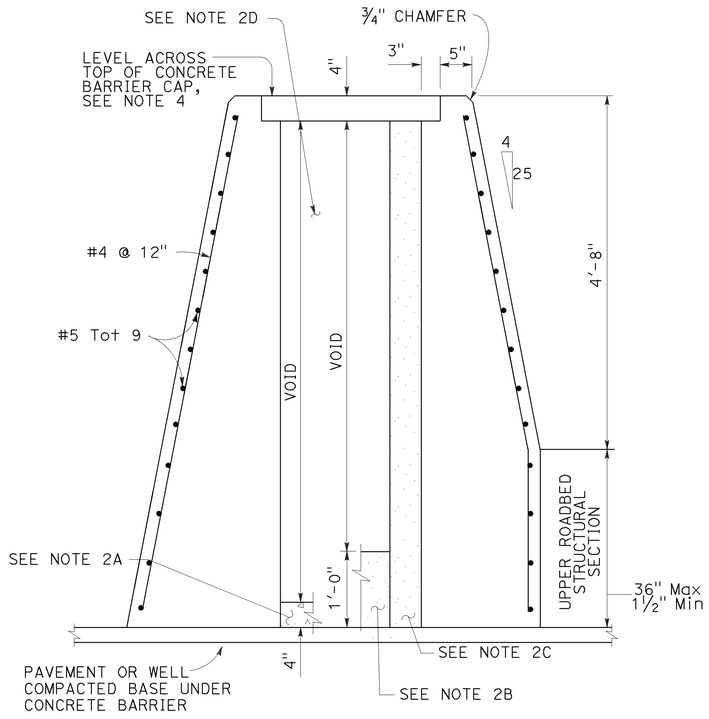

SECTION A-A

Scale 1" = 1'

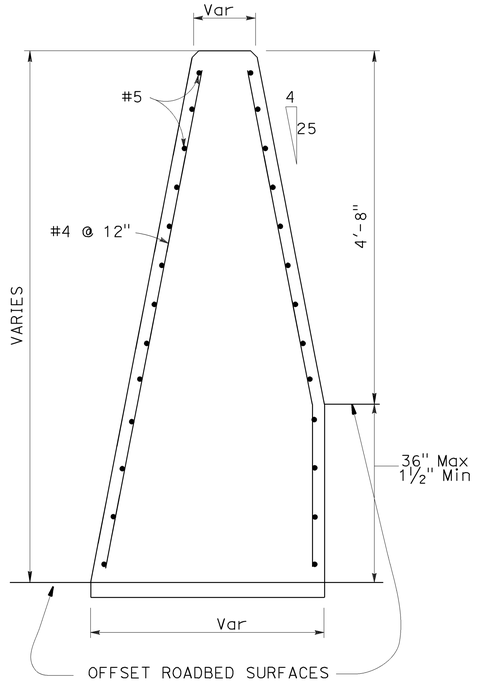

SECTION B-B

Scale 1" = 1'

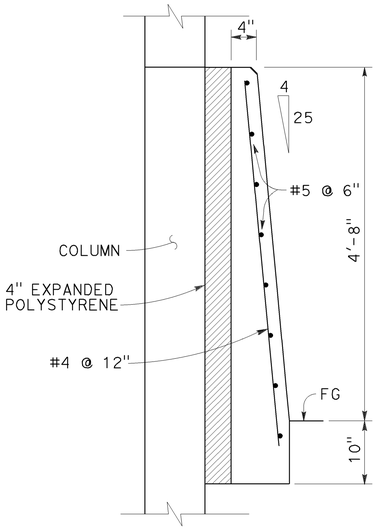

SECTION C-C

Scale 1" = 1'

NOTE:
THE CONTRACTOR MUST VERIFY ALL CONTROLLING FIELD DIMENSIONS BEFORE ORDERING OR FABRICATING ANY MATERIAL.

NOTES:

1. See Standard Plan A76D for Concrete Barrier Type 60G.
2. Contractor options for fill between concrete barrier walls:
   A. Place 4" PCC at base between concrete barrier walls.
   B. Place 1'-0" of granular material at base between walls.
   C. Place granular material from base to bottom of 4" cap.
   D. Monolithic concrete with foam blockouts is not permitted.
3. Reinforcing steel must extend continuous through construction joints.
4. Adjust height of concrete barrier wall on low side of offset or superelevated roadways to provide level grade across top of concrete barrier cap.

DAVID NEUMANN
BRANCH CHIEF

	BY	CHECKED
DESIGN	YU SONG	MAHFOUD LICHA
DETAILS	HUNG NGUYEN	YU SONG
QUANTITIES		

STATE OF CALIFORNIA
DEPARTMENT OF TRANSPORTATION

DIVISION OF ENGINEERING SERVICES
STRUCTURE DESIGN
DESIGN BRANCH B

BRIDGE NO. VARIES
POST MILE 2.9/27.3

CONCRETE BARRIER TYPE 60GE (Mod)
FOR PAVEMENT WITH VERTICAL OFFSET

SES-14

ORIGINAL SCALE IN INCHES FOR REDUCED PLANS 0 1 2 3

UNIT: 3619
PROJECT NUMBER & PHASE: 0414000421
CONTRACT NO.: 04-2J0701

DISREGARD PRINTS BEARING EARLIER REVISION DATES →

REVISION DATES	SHEET	OF
12/23/14		

STRUCTURES DESIGN GENERAL PLAN SHEET (ENGLISH) (REV.09-01-10)

FILE => 04-2j0701-u-ses14.dgn

USERNAME => s1268439 DATE PLOTTED => 18-AUG-2015 TIME PLOTTED => 13:07

DIST	COUNTY	ROUTE	POST MILES TOTAL PROJECT	SHEET No.	TOTAL SHEETS
04	Ala	880	2.9/27.3	843	906

REGISTERED CIVIL ENGINEER — 8-12-15 DATE

6-22-15
PLANS APPROVAL DATE

REGISTERED PROFESSIONAL ENGINEER — YU SONG No. C71687 Exp. 12/31/15 CIVIL — STATE OF CALIFORNIA

The State of California or its officers or agents shall not be responsible for the accuracy or completeness of scanned copies of this plan sheet.

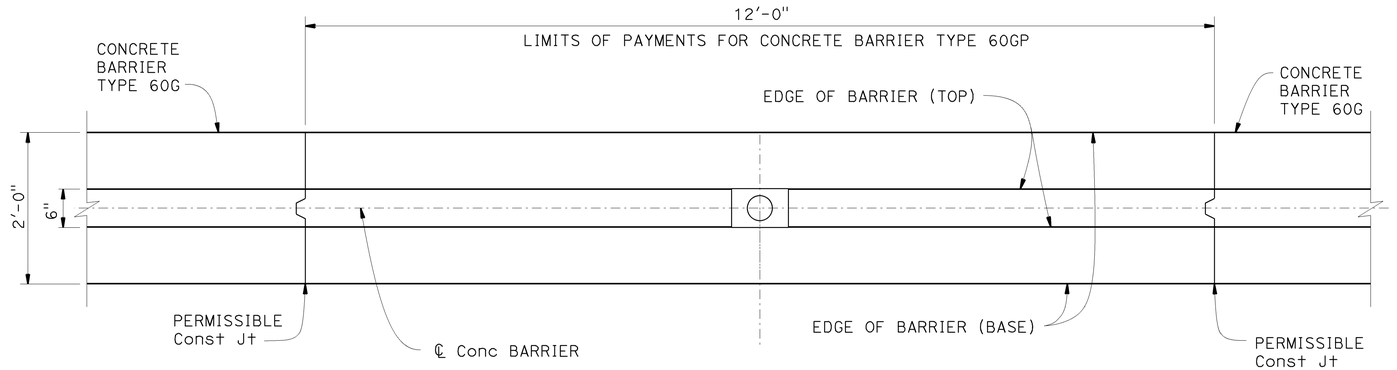

PLAN
Scale 1" = 1'

Note:
1. For reinforcement not shown, see "STANDARD PLAN A76D".

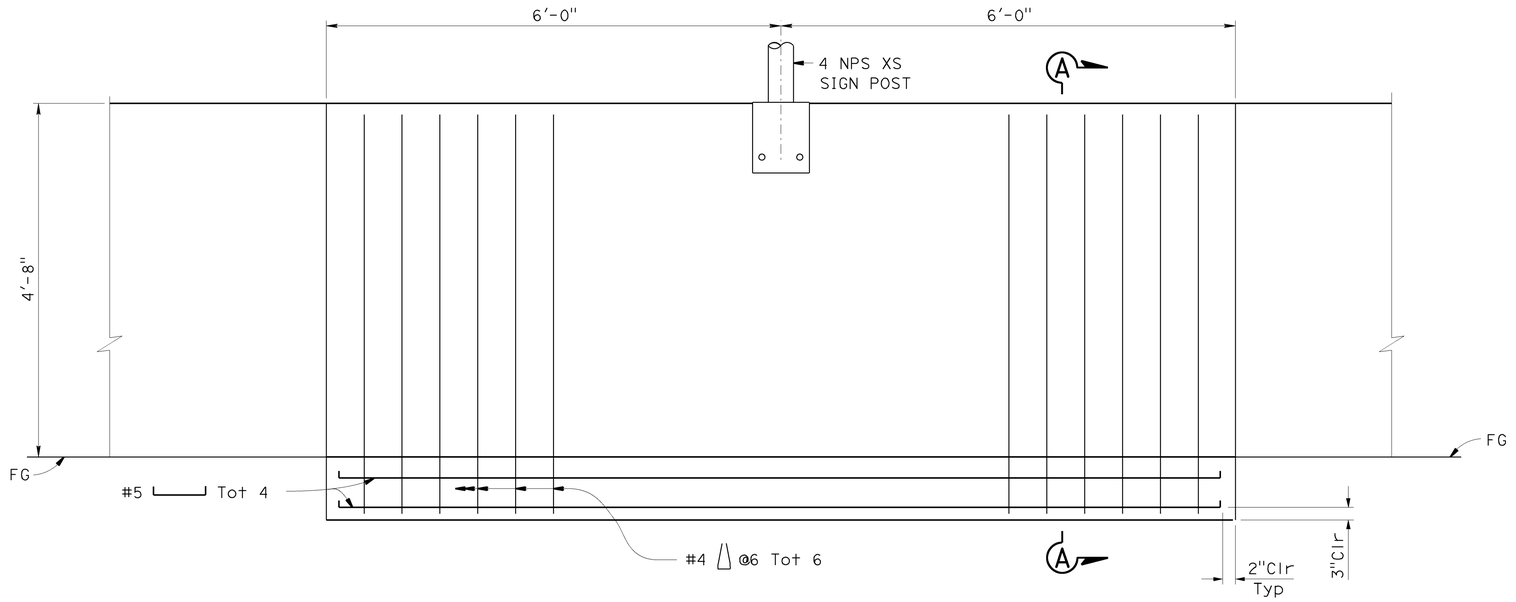

ELEVATION
Scale 1" = 1'

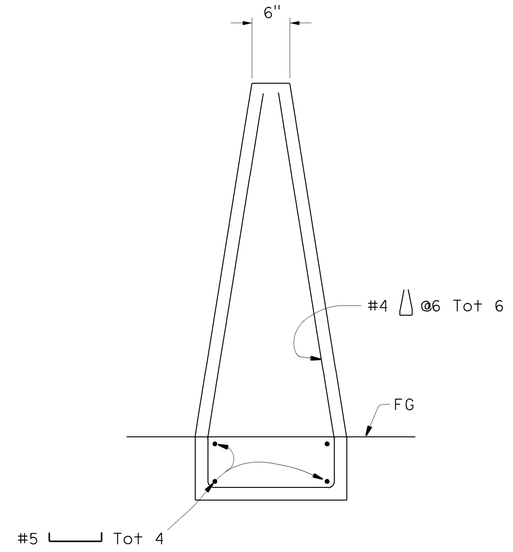

SECTION A-A
Scale 1" = 1'

NOTE:
THE CONTRACTOR MUST VERIFY ALL CONTROLLING FIELD DIMENSIONS BEFORE ORDERING OR FABRICATING ANY MATERIAL.

DAVID NEUMANN
BRANCH CHIEF

	BY	CHECKED
DESIGN	YU SONG	MAHFOUD LICHA
DETAILS	HUNG NGUYEN	YU SONG
QUANTITIES		

STATE OF CALIFORNIA
DEPARTMENT OF TRANSPORTATION

DIVISION OF ENGINEERING SERVICES
STRUCTURE DESIGN
DESIGN BRANCH B

BRIDGE NO. VARIES
POST MILE 2.9/27.3

SIGN POST MOUNTING DETAILS No. 1
CONCRETE BARRIER TYPE 60GP

SES-15

ORIGINAL SCALE IN INCHES FOR REDUCED PLANS 0 1 2 3

UNIT: 3619
PROJECT NUMBER & PHASE: 0414000421 CONTRACT NO.: 04-2J0701

DISREGARD PRINTS BEARING EARLIER REVISION DATES →

REVISION DATES	SHEET	OF
12/29/14		

FILE => 04-2j0701-u-ses15.dgn
USERNAME => s1268493 DATE PLOTTED => 18-AUG-2015 TIME PLOTTED => 13:07

DIST	COUNTY	ROUTE	POST MILES TOTAL PROJECT	SHEET No.	TOTAL SHEETS
04	Ala	880	2.9/27.3	844	906

REGISTERED CIVIL ENGINEER — 8-12-15 DATE

YU SONG No. C71687 Exp. 12/31/15 CIVIL — REGISTERED PROFESSIONAL ENGINEER — STATE OF CALIFORNIA

6-22-15
PLANS APPROVAL DATE

The State of California or its officers or agents shall not be responsible for the accuracy or completeness of scanned copies of this plan sheet.

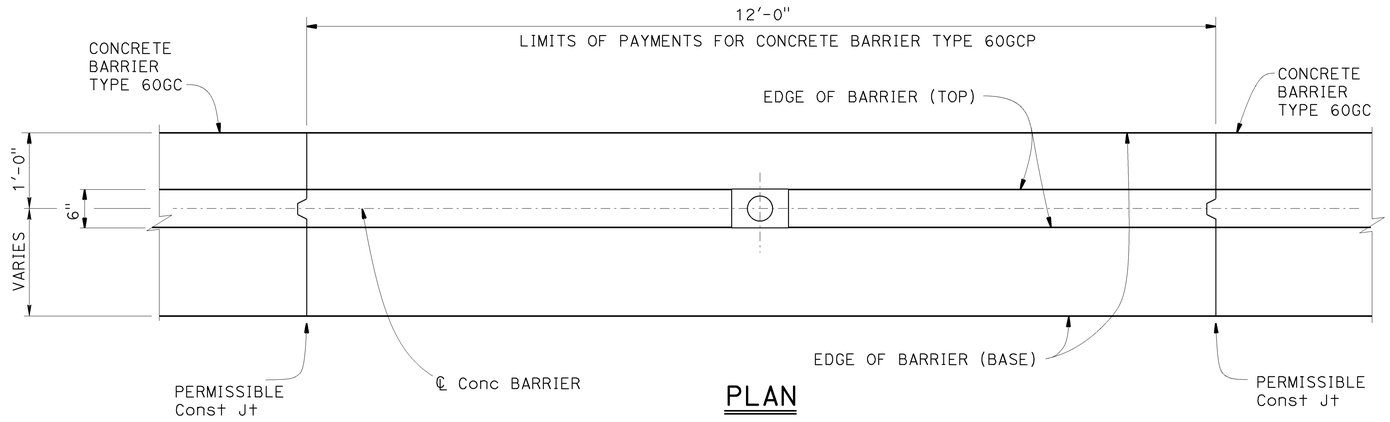

PLAN

Note:

1. For reinforcement not shown, see "STANDARD PLAN A76D".

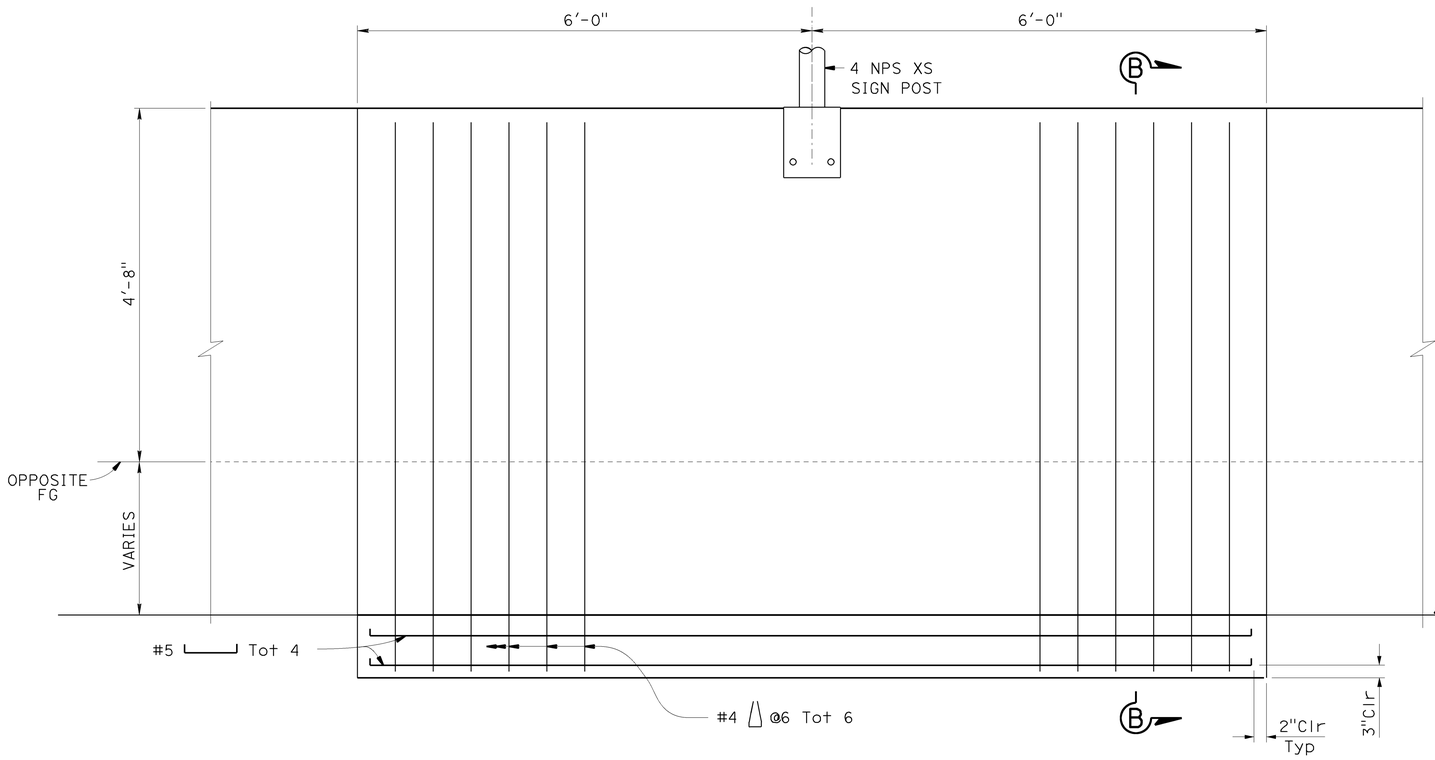

ELEVATION

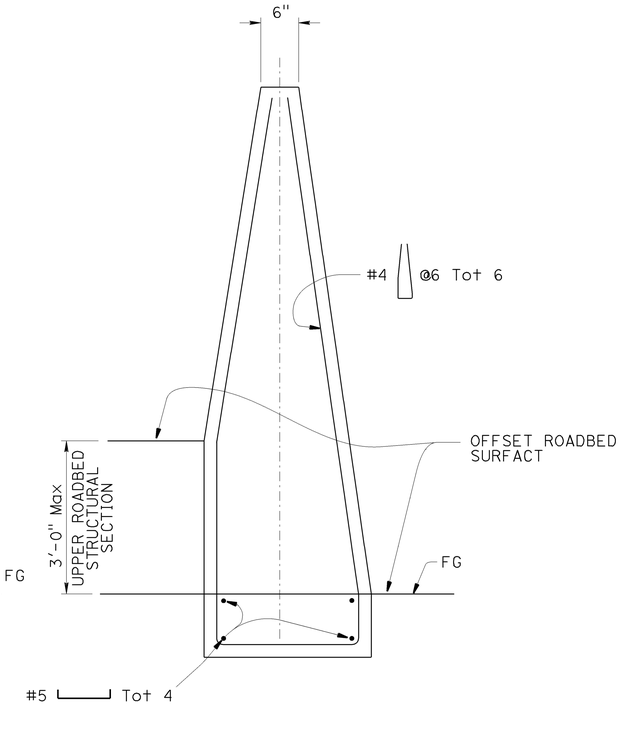

SECTION B-B

NOTE:
THE CONTRACTOR MUST VERIFY ALL CONTROLLING FIELD DIMENSIONS BEFORE ORDERING OR FABRICATING ANY MATERIAL.

NO SCALE

DAVID NEUMANN
BRANCH CHIEF

	BY	CHECKED
DESIGN	YU SONG	MAHFOUD LICHA
DETAILS	HUNG NGUYEN	YU SONG
QUANTITIES		

STATE OF CALIFORNIA
DEPARTMENT OF TRANSPORTATION

DIVISION OF ENGINEERING SERVICES
STRUCTURE DESIGN
DESIGN BRANCH B

BRIDGE NO. VARIES
POST MILE 2.9/27.3

SIGN POST MOUNTING DETAILS No. 2
CONCRETE BARRIER TYPE 60GCP

SES-16

ORIGINAL SCALE IN INCHES FOR REDUCED PLANS 0 1 2 3

UNIT: 3619
PROJECT NUMBER & PHASE: 0414000421 CONTRACT NO.: 04-2J0701

DISREGARD PRINTS BEARING EARLIER REVISION DATES →

REVISION DATES	SHEET	OF
12/29/14		

STRUCTURES DESIGN GENERAL PLAN SHEET (ENGLISH) (REV.09-01-10)

FILE => 04-2j0701-u-ses16.dgn

USERNAME => s126843e DATE PLOTTED => 18-AUG-2015 TIME PLOTTED => 13:08

DIST	COUNTY	ROUTE	POST MILES TOTAL PROJECT	SHEET No.	TOTAL SHEETS
04	Ala	880	2.9/27.3	845	906

REGISTERED CIVIL ENGINEER — 8-12-15 DATE

6-22-15
PLANS APPROVAL DATE

REGISTERED PROFESSIONAL ENGINEER — YU SONG No. C71687 Exp. 12/31/15 CIVIL — STATE OF CALIFORNIA

The State of California or its officers or agents shall not be responsible for the accuracy or completeness of scanned copies of this plan sheet.

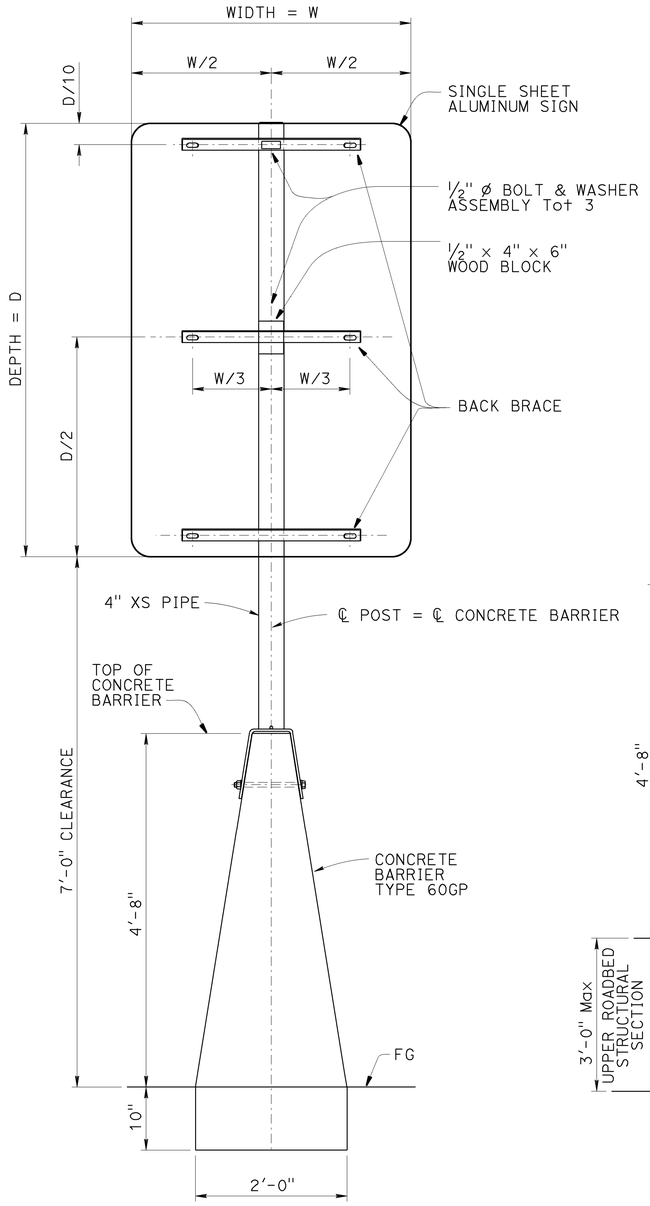

ELEVATION SIGN POST ON CONCRETE BARRIER

Scale 1" = 1'

NOTE:
THE CONTRACTOR MUST VERIFY ALL CONTROLLING FIELD DIMENSIONS BEFORE ORDERING OR FABRICATING ANY MATERIAL.

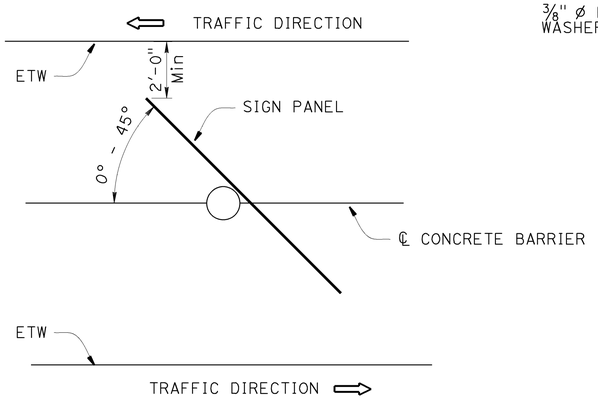

PLAN

No Scale

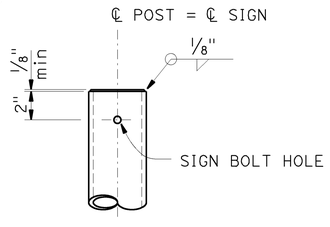

TOP OF POST DETAIL

No Scale

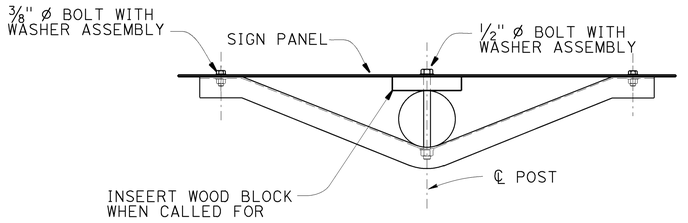

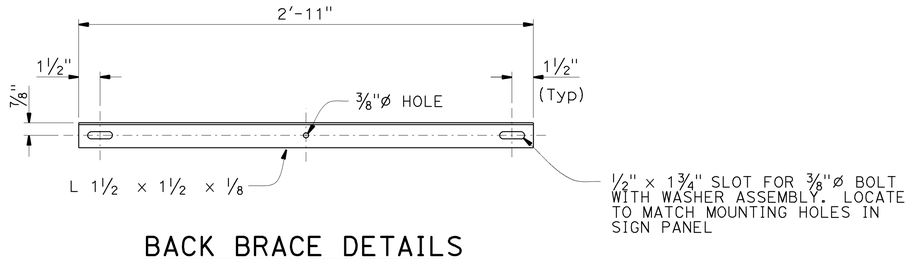

BACK BRACE DETAILS

3"=1'

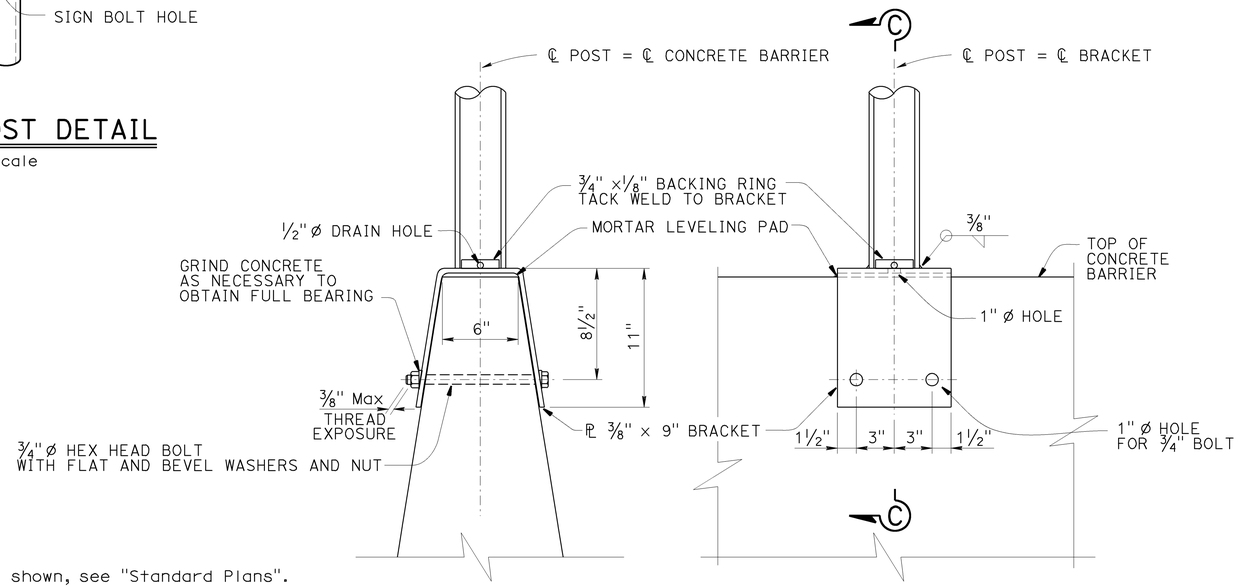

SECTION C-C

No Scale

PLAN

No Scale

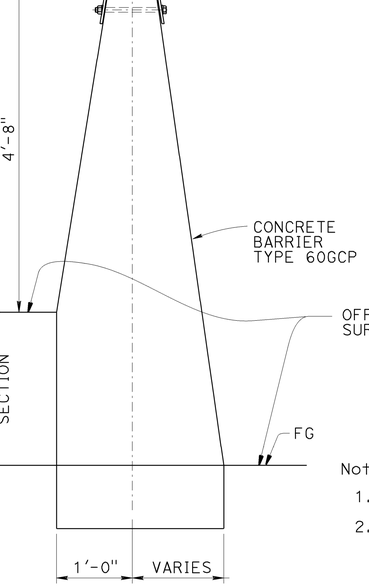

Notes:

1. For details not shown, see "Standard Plans".
2. Washer assembly consists of two flat washers, nut, fiber washer and jam nut. Bolts through post must be ½" diameter, bolts through sign panel and brace must be ⅜" diameter. Ream holes in sign as required.
3. All steel items except reinforcement must be galvanized after fabrication.
4. For location of signs and concrete barrier, see "Roadway Plans".
5. W = 30" Max, D = 72" Max
6. For limits of payments for concrete barrier (TYPE 60GP & TYPE 60GCP) length of footing, footing reinforcement and other details not shown, see SES-15, SES-16 and Standard Plans.

DAVID NEUMANN
BRANCH CHIEF

	BY	CHECKED
DESIGN	YU SONG	MAHFOUD LICHA
DETAILS	HUNG NGUYEN	YU SONG
QUANTITIES		

STATE OF CALIFORNIA
DEPARTMENT OF TRANSPORTATION

DIVISION OF ENGINEERING SERVICES
STRUCTURE DESIGN
DESIGN BRANCH B

BRIDGE NO. VARIES
POST MILE 2.9/27.3

SIGN POST MOUNTING DETAILS No. 3
CONCRETE BARRIER TYPE 60GP & 60GCP

SES-17

ORIGINAL SCALE IN INCHES FOR REDUCED PLANS 0 1 2 3

UNIT: 3619
PROJECT NUMBER & PHASE: 0414000421 CONTRACT NO.: 04-2J0701

DISREGARD PRINTS BEARING EARLIER REVISION DATES →

REVISION DATES	SHEET	OF
12/29/14		

STRUCTURES DESIGN GENERAL PLAN SHEET (ENGLISH) (REV.09-01-10)

FILE => 04-2J0701-u-ses17.dgn

USERNAME => s126849 DATE PLOTTED => 16-AUG-2015 TIME PLOTTED => 13:08

DIST	COUNTY	ROUTE	POST MILES TOTAL PROJECT	SHEET No.	TOTAL SHEETS
04	Ala	880	2.9/27.3	846	906

REGISTERED CIVIL ENGINEER — 8-12-15 DATE

6-22-15
PLANS APPROVAL DATE

REGISTERED PROFESSIONAL ENGINEER — RICHARD LANCE WARREN — No. C78431 — Exp. 9/30/15 — CIVIL — STATE OF CALIFORNIA

The State of California or its officers or agents shall not be responsible for the accuracy or completeness of scanned copies of this plan sheet.

LIMITS OF PAYMENT FOR CONCRETE BARRIER TYPE 60SD (Mod)

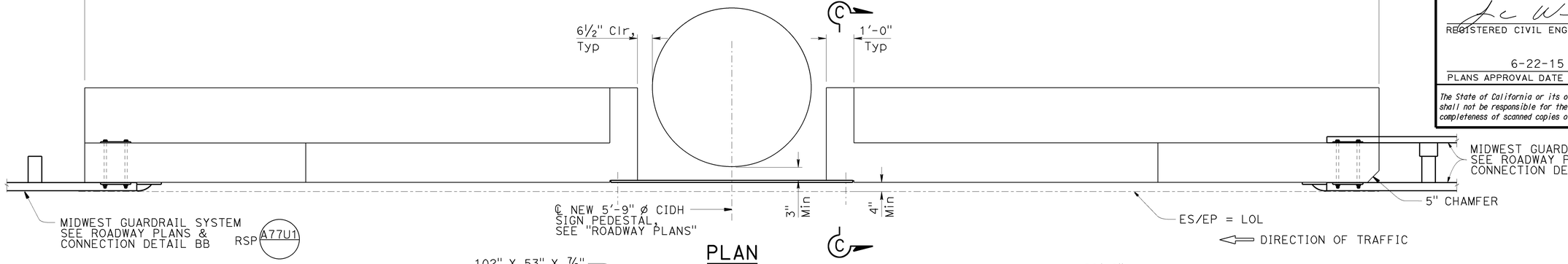

PLAN

Scale ½" = 1'

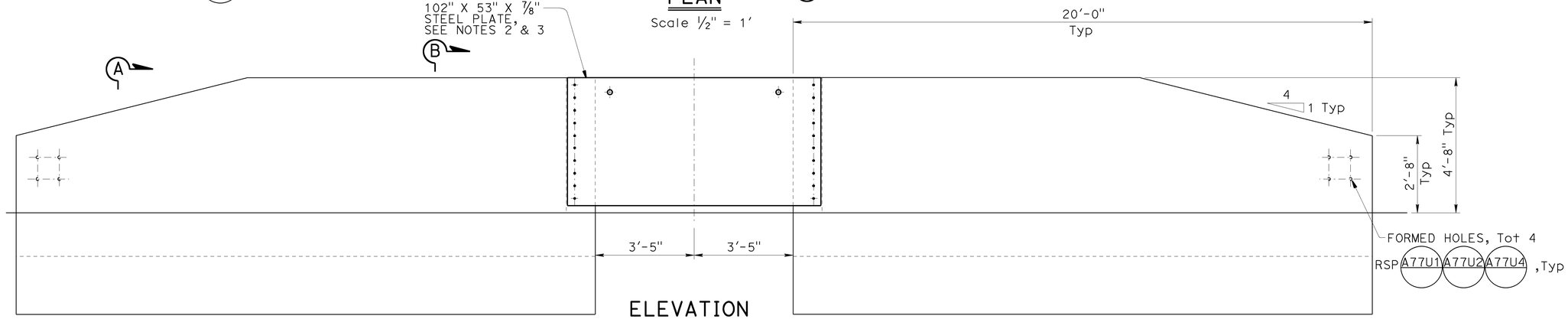

ELEVATION

Scale ½" = 1'

NOTES:

1. See "ROADWAY PLANS" for exact alignment of barrier.
2. All plates & connections must be galvanized.
3. See "TRANSITION AT PEDESTAL SIGN STRUCTURE DETAILS No. 2" for details not shown.

NOTE:
THE CONTRACTOR MUST VERIFY ALL CONTROLLING FIELD DIMENSIONS BEFORE ORDERING OR FABRICATING ANY MATERIAL.

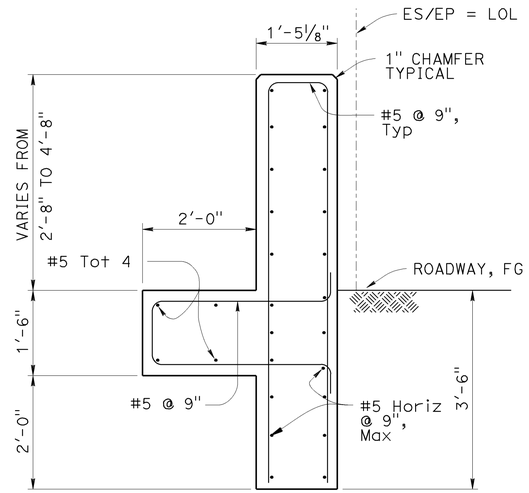

SECTION A-A

¾= 1'-0"

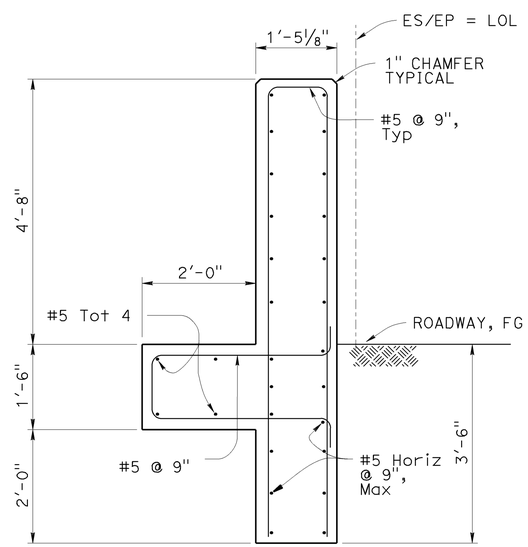

SECTION B-B

¾= 1'-0"

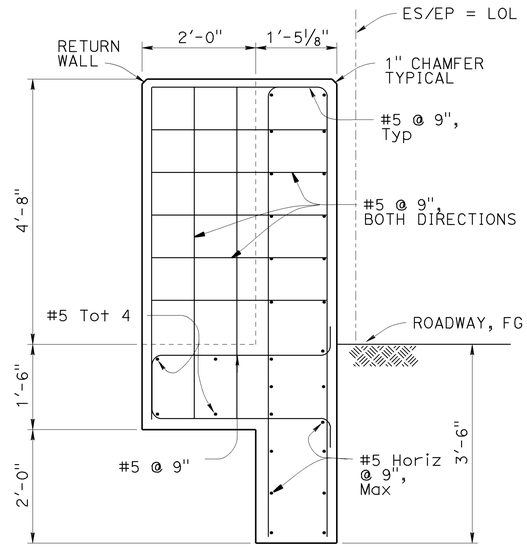

SECTION C-C

¾= 1'-0"

DAVID NEUMANN
BRANCH CHIEF

	BY	CHECKED
DESIGN	LANCE WARREN	VICTOR LOPEZ
DETAILS	HUNG NGUYEN	VICTOR LOPEZ
QUANTITIES		

STATE OF **CALIFORNIA**
DEPARTMENT OF TRANSPORTATION

DIVISION OF ENGINEERING SERVICES
STRUCTURE DESIGN
DESIGN BRANCH B

BRIDGE NO. N/A
POST MILE 2.9/27.3

CONCRETE BARRIER (TYPE 60SD Mod)

TRANSITION AT SIGN PEDESTAL STRUCTURE DETAILS No. 1

SES-18

ORIGINAL SCALE IN INCHES FOR REDUCED PLANS 0 1 2 3

UNIT: 3619
PROJECT NUMBER & PHASE: 0414000421
CONTRACT NO.: 04-2J0701

DISREGARD PRINTS BEARING EARLIER REVISION DATES

REVISION DATES				SHEET	OF
3/12/14	5/11/15	6/23/15	7/23/15	1	2

STRUCTURES DESIGN GENERAL PLAN SHEET (ENGLISH) (REV.09-01-10)

FILE => 04-2j0701-u-ses18.dgn

USERNAME => s126849 DATE PLOTTED => 18-AUG-2015 TIME PLOTTED => 13:08

DIST	COUNTY	ROUTE	POST MILES TOTAL PROJECT	SHEET No.	TOTAL SHEETS
04	Ala	880	2.9/27.3	847	906

REGISTERED CIVIL ENGINEER — 8-12-15 DATE

6-22-15
PLANS APPROVAL DATE

REGISTERED PROFESSIONAL ENGINEER — RICHARD LANCE WARREN — No. C78431 — Exp. 9/30/15 — CIVIL — STATE OF CALIFORNIA

The State of California or its officers or agents shall not be responsible for the accuracy or completeness of electronic copies of this plan sheet.

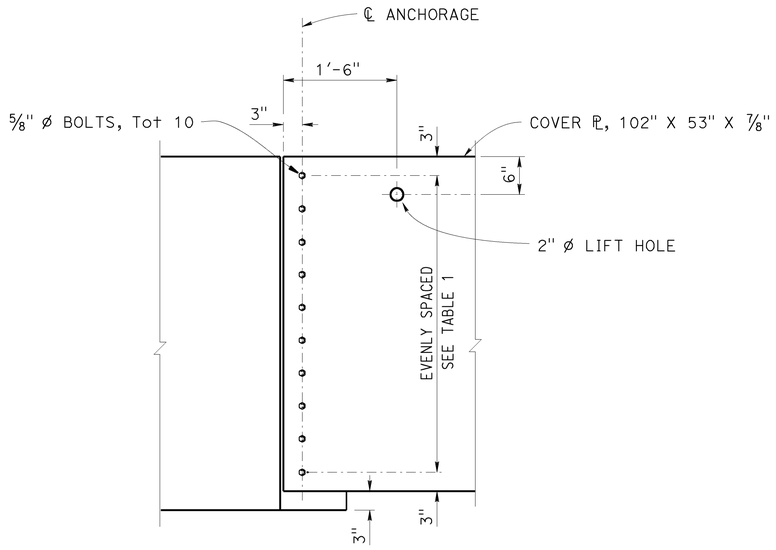

DETAIL D

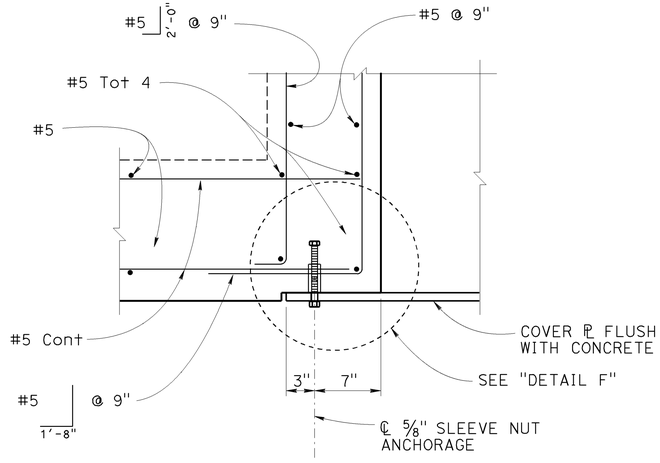

DETAIL E

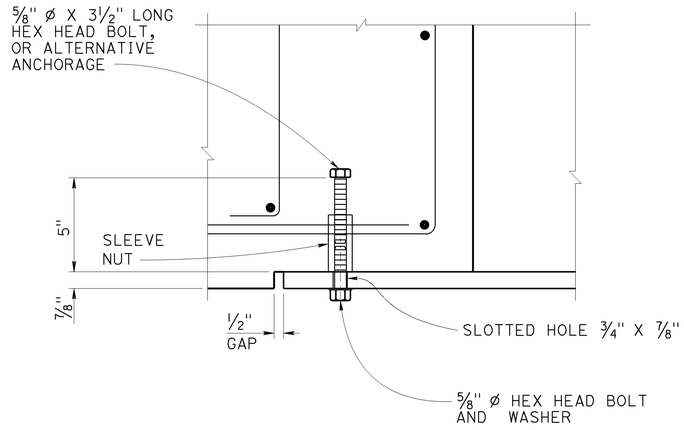

DETAIL F

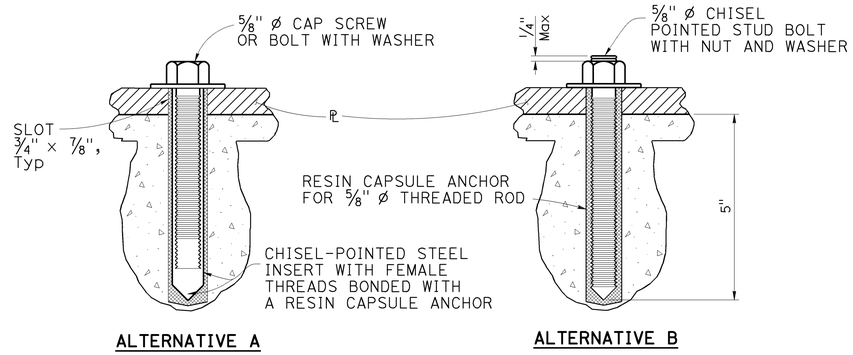

ALTERNATIVE ANCHORAGE

NOTE:
THE CONTRACTOR MUST VERIFY ALL CONTROLLING FIELD DIMENSIONS BEFORE ORDERING OR FABRICATING ANY MATERIAL.

NOTE:
Structural steel, f_y = 50,000 psi
Unless otherwise noted

NO SCALE

DAVID NEUMANN
BRANCH CHIEF

	BY	CHECKED
DESIGN	LANCE WARREN	VICTOR LOPEZ
DETAILS	HUNG NGUYEN	VICTOR LOPEZ
QUANTITIES		

STATE OF CALIFORNIA
DEPARTMENT OF TRANSPORTATION

DIVISION OF ENGINEERING SERVICES
STRUCTURE DESIGN
DESIGN BRANCH B

BRIDGE NO. N/A
POST MILE 2.9/27.3

CONCRETE BARRIER (TYPE 60SD Mod)
TRANSITION AT SIGN PEDESTAL STRUCTURE DETAILS No. 2

SES-19

STRUCTURES DESIGN GENERAL PLAN SHEET (ENGLISH) (REV.09-01-10)

ORIGINAL SCALE IN INCHES FOR REDUCED PLANS 0 1 2 3

UNIT: 3619
PROJECT NUMBER & PHASE: 0414000421
CONTRACT NO.: 04-2J0701

DISREGARD PRINTS BEARING EARLIER REVISION DATES →

REVISION DATES				SHEET	OF
3/10/14	5/11/15	6/3/15	7/23/15	2	2

FILE => 04-2j0701-u-ses19.dgn

USERNAME => s126849 DATE PLOTTED => 18-AUG-2015 TIME PLOTTED => 13:09

DIST	COUNTY	ROUTE	POST MILES TOTAL PROJECT	SHEET No.	TOTAL SHEETS
04	Ala	880	2.9/27.3	848	906

REGISTERED CIVIL ENGINEER — 8-12-15 DATE

6-22-15
PLANS APPROVAL DATE

REGISTERED PROFESSIONAL ENGINEER — YU SONG No. C71687 Exp. 12/31/15 CIVIL — STATE OF CALIFORNIA

The State of California or its officers or agents shall not be responsible for the accuracy or completeness of scanned copies of this plan sheet.

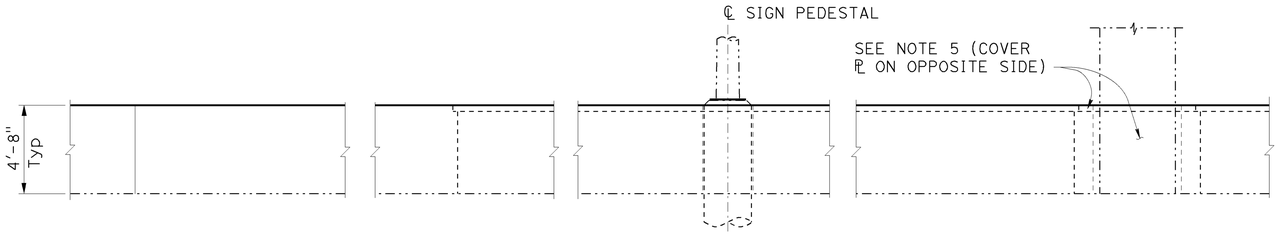

ELEVATION
1/4" = 1'-0"

NOTES:

1. See "Roadway Plans" for median barrier layout.
2. See Standard Plan A76D for CONCRETE BARRIER TYPE 60G.
3. Contractor options for fill between barrier walls.
   A. Place 4" PCC at base between barrier walls
   B. Place granular material from base to bottom of 4" cap
4. Adjust height of concrete barrier wall on low side of offset or superelevated roadways to provide level grade across top of concrete barrier cap.
5. For cover plate details see "CONCRETE BARRIER (TYPE 60GE HGBR), TRANSITION AT COLUMN OR SIGN PEDESTAL No. 4" sheet.
6. See Standard Plan A76F for Sign Pedestal details.

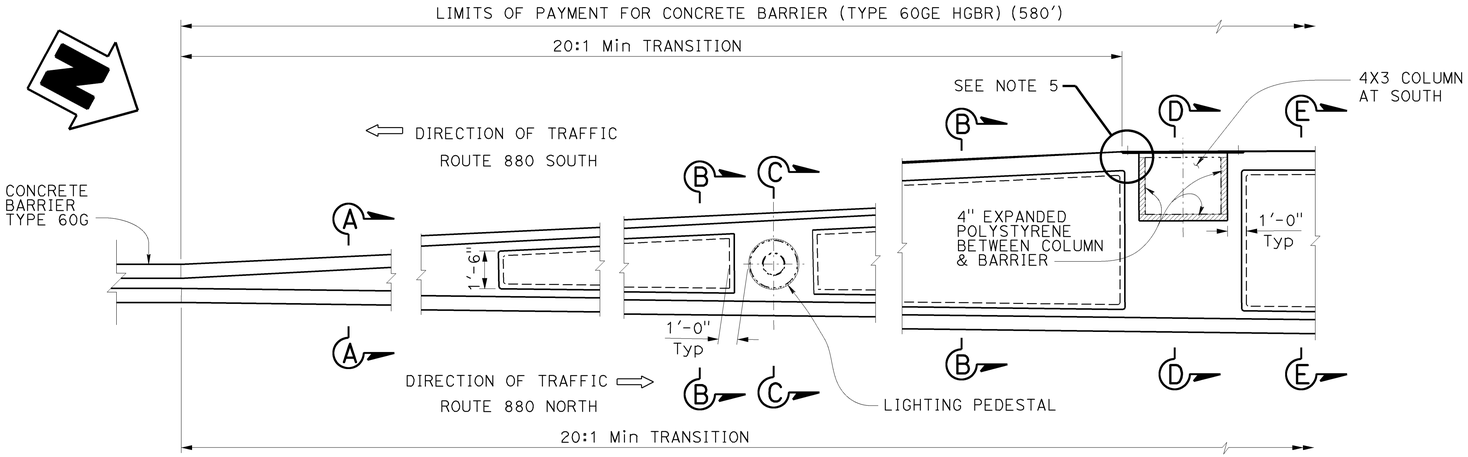

PLAN
1/4" = 1'-0"

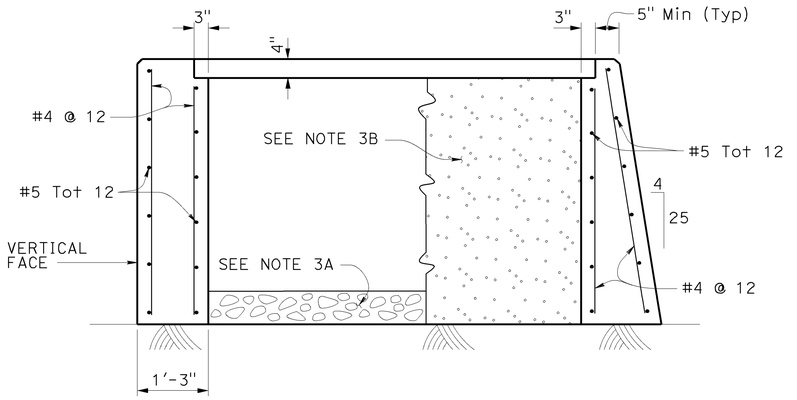

SECTION E-E
3/4" = 1'-0"

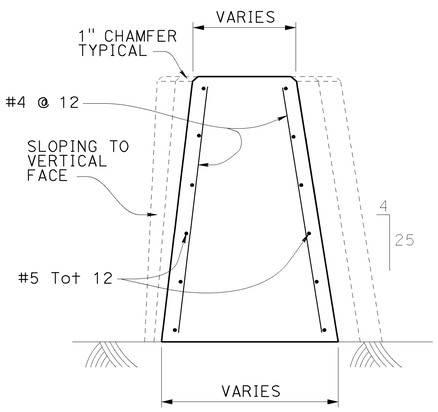

SECTION A-A
3/4" = 1'-0"

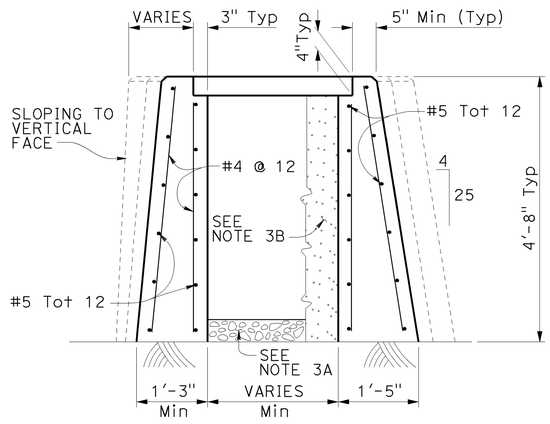

SECTION B-B
3/4" = 1'-0"

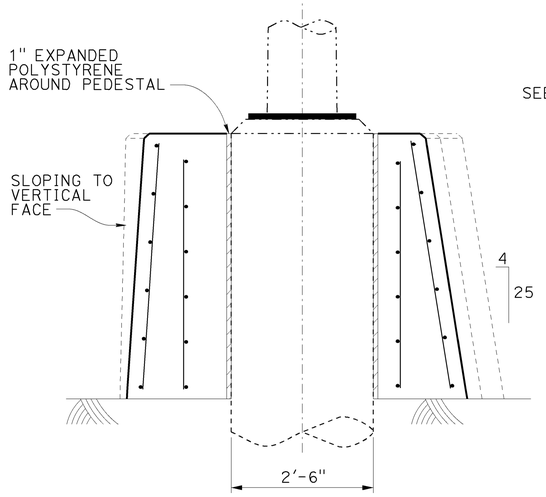

SECTION C-C
3/4" = 1'-0"

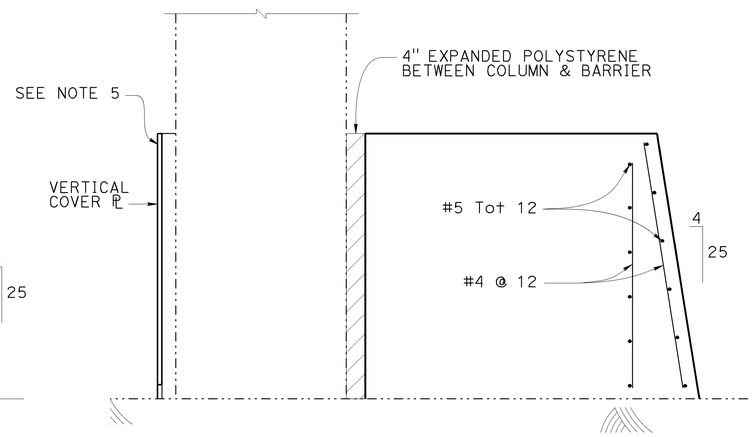

SECTION D-D
3/4" = 1'-0"

BRANCH CHIEF: DAVID NEUMANN	DESIGN	BY: YU SONG	CHECKED: P C WELLS	STATE OF CALIFORNIA DEPARTMENT OF TRANSPORTATION	DIVISION OF ENGINEERING SERVICES STRUCTURE DESIGN
	DETAILS	BY: P C WELLS	CHECKED: YU SONG		SPECIAL DESIGN BRANCH
	QUANTITIES	BY: YU SONG	CHECKED: P C WELLS		BRIDGE NO. / POST MILE: 2.9/27.3

CONCRETE BARRIER (TYPE 60GE HGBR)
TRANSITION AT COLUMN OR SIGN PEDESTAL No. 1

SES-20

STRUCTURES DESIGN SPECIAL DESIGN SHEET (ENGLISH) (REV. 09-01-10)

ORIGINAL SCALE IN INCHES FOR REDUCED PLANS 0 1 2 3

UNIT: 3619
PROJECT NUMBER & PHASE: 0414000421 CONTRACT NO.: 04-2J0701

DISREGARD PRINTS BEARING EARLIER REVISION DATES →

REVISION DATES | SHEET 1 | OF

FILE => 04-2j0701-u-ses20.dgn

USERNAME => s126849 DATE PLOTTED => 18-AUG-2015 TIME PLOTTED => 13:10

DIST	COUNTY	ROUTE	POST MILES TOTAL PROJECT	SHEET No.	TOTAL SHEETS
04	Ala	880	2.9/27.3	849	906

REGISTERED CIVIL ENGINEER — 8-12-15 DATE

6-22-15
PLANS APPROVAL DATE

REGISTERED PROFESSIONAL ENGINEER — YU SONG No. C71687 Exp. 12/31/15 CIVIL — STATE OF CALIFORNIA

The State of California or its officers or agents shall not be responsible for the accuracy or completeness of scanned copies of this plan sheet.

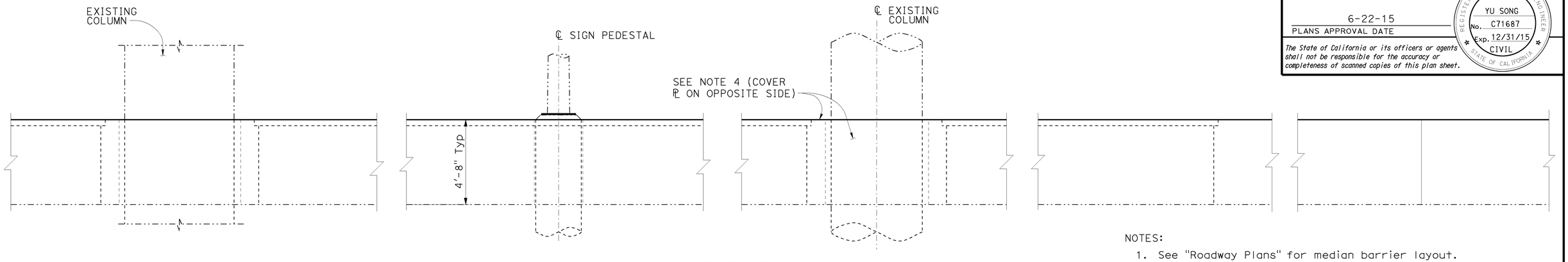

ELEVATION
3/8" = 1'-0"

NOTES:

1. See "Roadway Plans" for median barrier layout.
2. See Standard Plan A76D for CONCRETE BARRIER TYPE 60G.
3. Adjust height of concrete barrier wall on low side of offset or superelevated roadways to provide level grade across top of concrete barrier cap.
4. For cover plate details see "CONCRETE BARRIER (TYPE 60GE HGBR), TRANSITION AT COLUMN OR SIGN PEDESTAL No. 4" sheet.
5. See Standard Plan A76F for Sign Pedestal details.

LIMITS OF PAYMENT FOR CONCRET BARRIER TYPE 60GE HGBR (580')

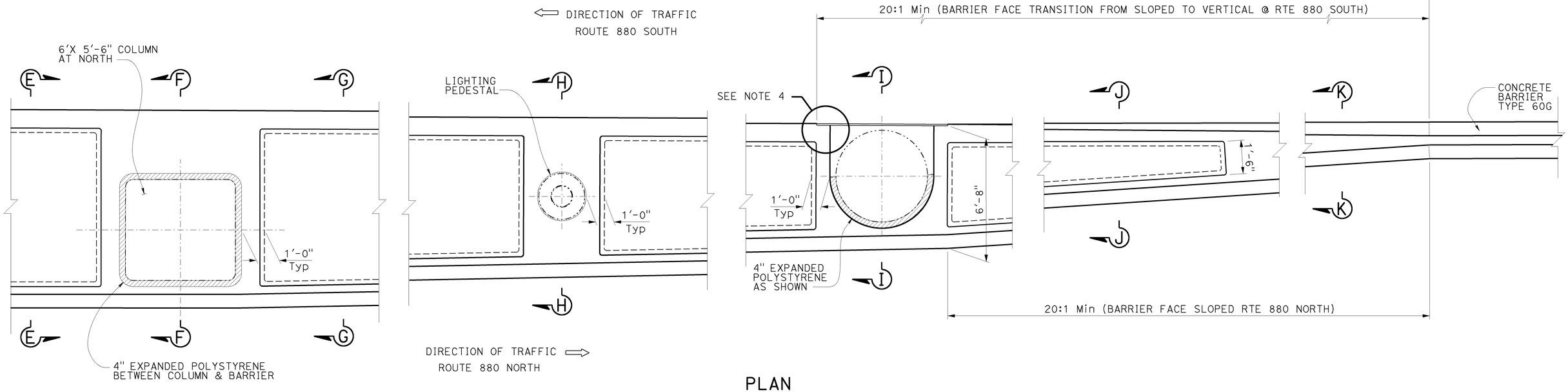

PLAN
3/8" = 1'-0"

BRANCH CHIEF: DAVID NEUMANN	DESIGN	BY YU SONG	CHECKED P C WELLS	STATE OF CALIFORNIA DEPARTMENT OF TRANSPORTATION	DIVISION OF ENGINEERING SERVICES STRUCTURE DESIGN SPECIAL DESIGN BRANCH	BRIDGE NO.	CONCRETE BARRIER (TYPE 60GE HGBR) TRANSITION AT COLUMN OR SIGN PEDESTAL No. 2	SES-21
	DETAILS	BY P C WELLS	CHECKED YU SONG			POST MILE 2.9/27.3		
	QUANTITIES	BY YU SONG	CHECKED P C WELLS					

STRUCTURES DESIGN SPECIAL DESIGN SHEET (ENGLISH) (REV. 09-01-10)

ORIGINAL SCALE IN INCHES FOR REDUCED PLANS 0 1 2 3

UNIT: 3619
PROJECT NUMBER & PHASE: 0414000421 CONTRACT NO.: 04-2J0701

DISREGARD PRINTS BEARING EARLIER REVISION DATES →

REVISION DATES | SHEET 1 | OF

FILE => 04-2J0701-u-ses21.dgn

USERNAME => S1266849 DATE PLOTTED => 18-AUG-2015 TIME PLOTTED => 13:10

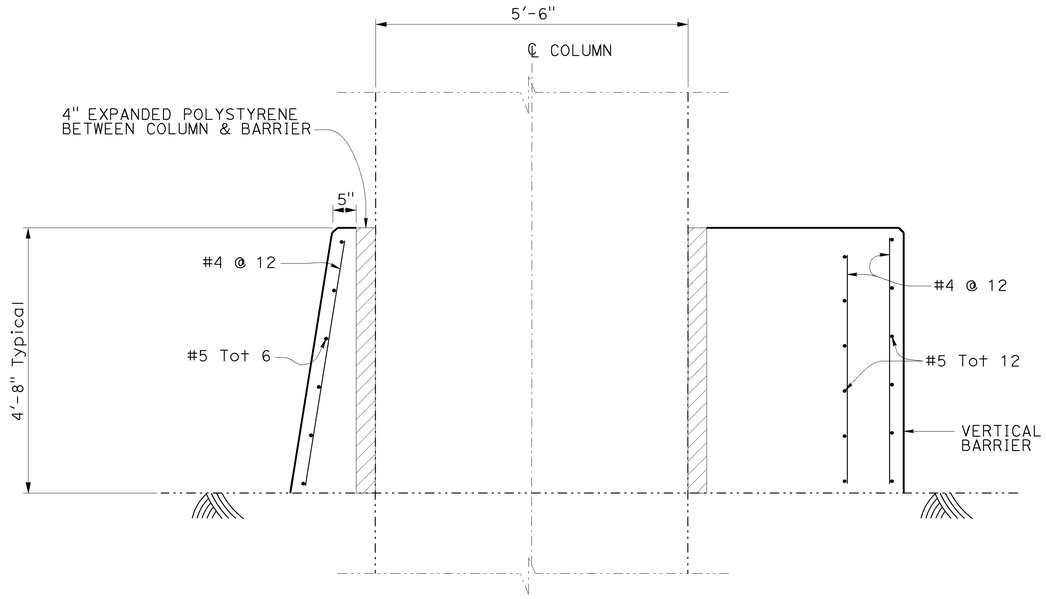

SECTION F-F

3/4" = 1'-0"

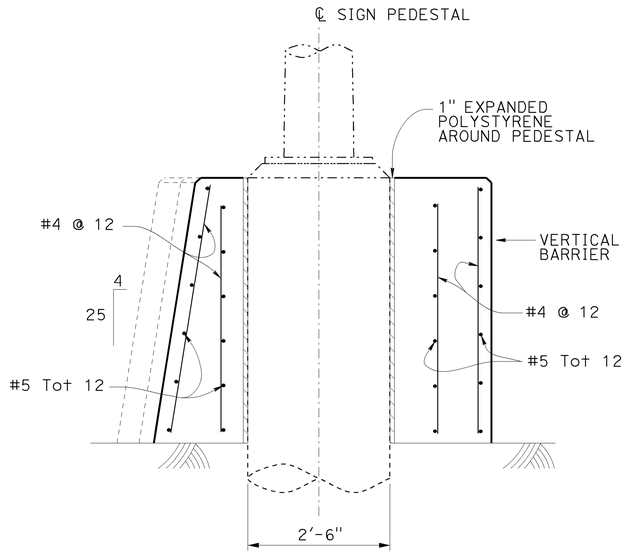

SECTION H-H

3/4" = 1'-0"

DIST	COUNTY	ROUTE	POST MILES TOTAL PROJECT	SHEET No.	TOTAL SHEETS
04	Ala	880	2.9/27.3	850	906

REGISTERED CIVIL ENGINEER — 8-12-15 DATE

6-22-15
PLANS APPROVAL DATE

REGISTERED PROFESSIONAL ENGINEER — YU SONG No. C71687 Exp. 12/31/15 CIVIL — STATE OF CALIFORNIA

The State of California or its officers or agents shall not be responsible for the accuracy or completeness of scanned copies of this plan sheet.

NOTES:

1. See Standard Plan A76D for CONCRETE BARRIER TYPE 60G.
2. Contractor options for fill between barrier walls.
   A. Place 4" PCC at base between barrier walls
   B. Place granular material from base to bottom of 4" cap
3. Adjust height of concrete barrier wall on low side of offset or superelevated roadways to provide level grade across top of concrete barrier cap.
4. For cover plate details see "CONCRETE BARRIER (TYPE 60GE HGBR), TRANSITION AT COLUMN OR SIGN PEDESTAL No. 4" sheet.
5. See Standard Plan A76F for Sign Pedestal details.

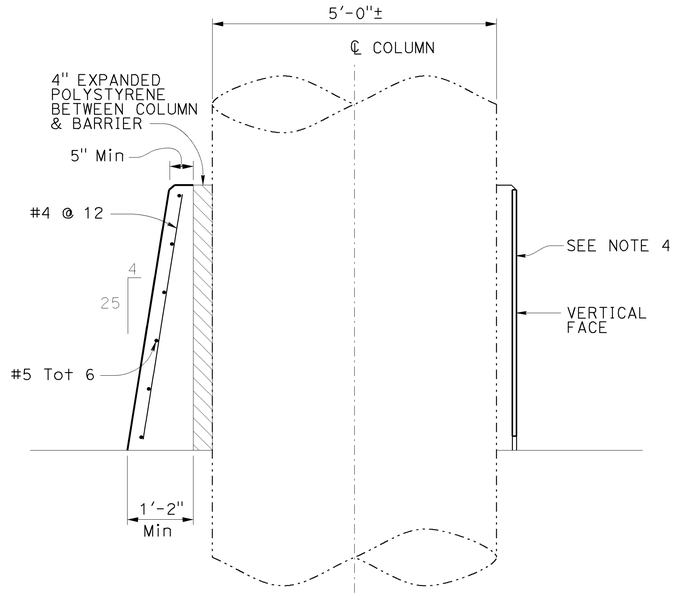

SECTION I-I

3/4" = 1'-0"

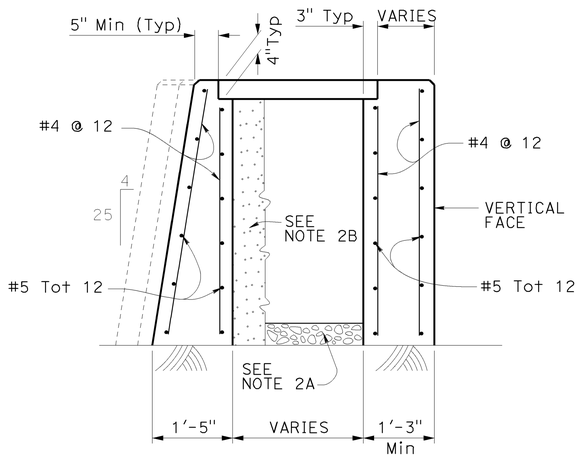

SECTION G-G

3/4" = 1'-0"

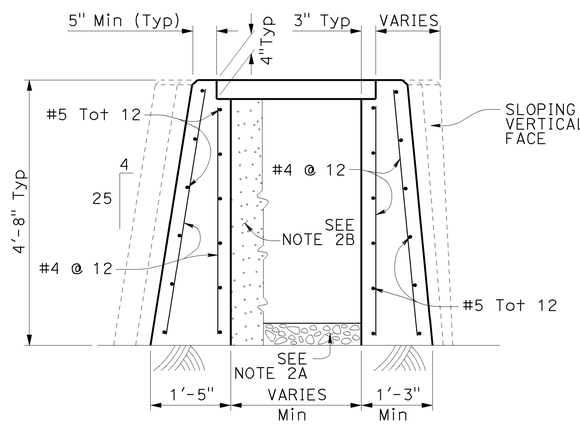

SECTION J-J

3/4" = 1'-0"

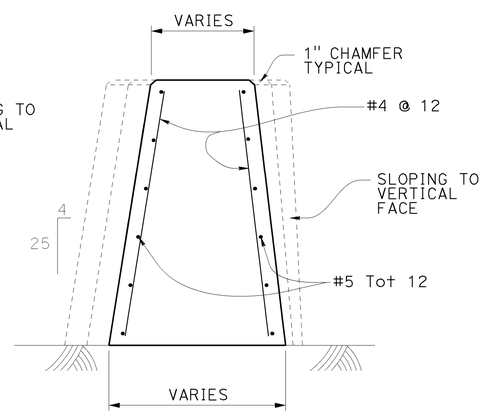

SECTION K-K

3/4" = 1'-0"

BRANCH CHIEF	DAVID NEUMANN	DESIGN	BY YU SONG	CHECKED P C WELLS	
		DETAILS	BY P C WELLS	CHECKED YU SONG	
		QUANTITIES	BY YU SONG	CHECKED P C WELLS	

STATE OF CALIFORNIA
DEPARTMENT OF TRANSPORTATION

DIVISION OF ENGINEERING SERVICES
STRUCTURE DESIGN
SPECIAL DESIGN BRANCH

BRIDGE NO. --
POST MILE 2.9/27.3

CONCRETE BARRIER (TYPE 60GE HGBR)
TRANSITION AT COLUMN OR SIGN PEDESTAL No. 3

SES-22

STRUCTURES DESIGN SPECIAL DESIGN SHEET (ENGLISH) (REV. 09-01-10)

ORIGINAL SCALE IN INCHES FOR REDUCED PLANS 0 1 2 3

UNIT: 3619
PROJECT NUMBER & PHASE: 0414000421
CONTRACT NO.: 04-2J0701

DISREGARD PRINTS BEARING EARLIER REVISION DATES →

REVISION DATES

SHEET 3 OF

FILE => 04-2j0701-u-ses22.dgn

USERNAME => s1126849 DATE PLOTTED => 18-AUG-2015 TIME PLOTTED => 13:10

DIST	COUNTY	ROUTE	POST MILES TOTAL PROJECT	SHEET No.	TOTAL SHEETS
04	Ala	880	2.9/27.3	851	906

REGISTERED CIVIL ENGINEER — 8-12-15 DATE

6-22-15
PLANS APPROVAL DATE

REGISTERED PROFESSIONAL ENGINEER — YU SONG No. C71687 Exp. 12/31/15 CIVIL — STATE OF CALIFORNIA

The State of California or its officers or agents shall not be responsible for the accuracy or completeness of scanned copies of this plan sheet.

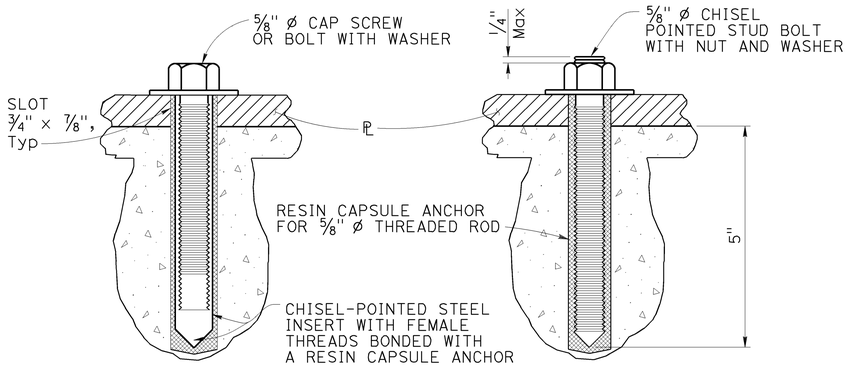

ALTERNATIVE A ALTERNATIVE B

ALTERNATIVE ANCHORAGE

NO SCALE

TABLE 1		
L (ft)	PLATE THICKNESS (in)	TOTAL NO. OF BOLTS
8'-6" Max	7/8	10
6'-6" Max	11/16	7
4'-6" Max	7/16	5

NOTE:

Structural steel, f_y = 50,000 psi
Unless otherwise noted

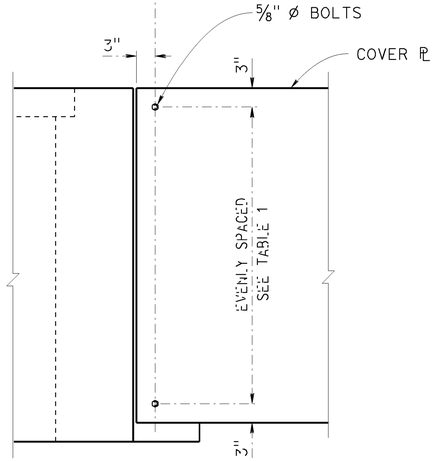

DETAIL L

1" = 1'-0"

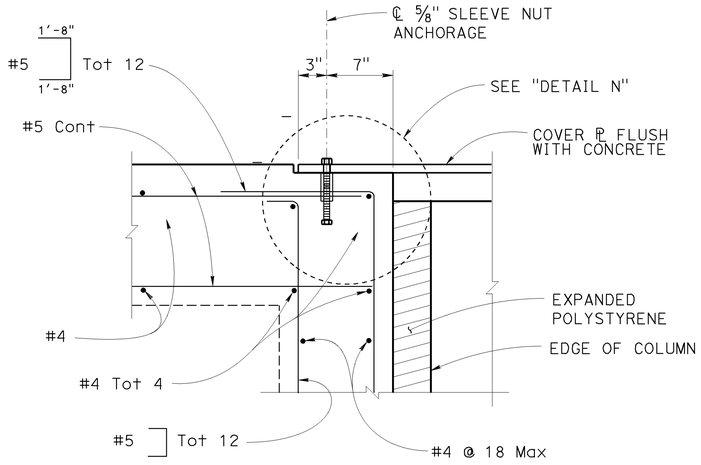

DETAIL M

1½" = 1'-0"

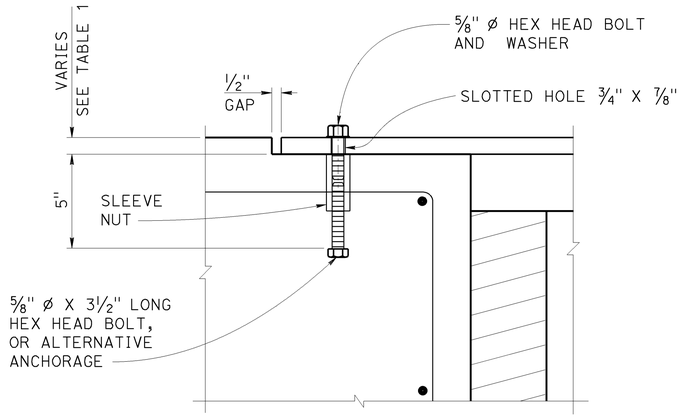

DETAIL N

3" = 1'-0"

BRANCH CHIEF	DAVID NEUMANN						
	DESIGN	BY YU SONG	CHECKED P C WELLS	STATE OF CALIFORNIA DEPARTMENT OF TRANSPORTATION	DIVISION OF ENGINEERING SERVICES STRUCTURE DESIGN SPECIAL DESIGN BRANCH	BRIDGE NO. --	CONCRETE BARRIER (TYPE 60GE HGBR)
	DETAILS	BY P C WELLS	CHECKED YU SONG			POST MILE 2.9/27.3	TRANSITION AT COLUMN OR SIGN PEDESTAL No. 4
	QUANTITIES	BY YU SONG	CHECKED P C WELLS				SES-23

STRUCTURES DESIGN SPECIAL DESIGN SHEET (ENGLISH) (REV. 09-01-10)

ORIGINAL SCALE IN INCHES FOR REDUCED PLANS 0 1 2 3

UNIT: 3619 PROJECT NUMBER & PHASE: 0414000421 CONTRACT NO.: 04-2J0701

DISREGARD PRINTS BEARING EARLIER REVISION DATES →

REVISION DATES | SHEET 4 | OF

USERNAME => s1126849 DATE PLOTTED => 18-AUG-2015 TIME PLOTTED => 13:11

FILE => 04-2j0701-u-ses23.dgn

M

Maint	MAINTENANCE
Max	MAXIMUM
MB	METAL BEAM
MBB	METAL BEAM BARRIER
MBGR	METAL BEAM GUARD RAILING
Med	MEDIAN
MGS	MIDWEST GUARDRAIL SYSTEM
MH	MANHOLE
Min	MINIMUM
Misc	MISCELLANEOUS
Misc I & S	MISCELLANEOUS IRON AND STEEL
Mkr	MARKER
Mod	MODIFIED, MODIFY
Mon	MONUMENT
MP	METAL PLATE
MPGR	METAL PLATE GUARD RAILING
MR	MOVEMENT RATING
MSE	MECHANICALLY STABILIZED EMBANKMENT
Mt	MOUNTAIN, MOUNT
Mtl	MATERIAL
MVP	MAINTENANCE VEHICLE PULLOUT

N

N	NORTH
NB	NORTHBOUND
No.	NUMBER (MUST HAVE PERIOD)
Nos.	NUMBERS (MUST HAVE PERIOD)
NPS	NOMINAL PIPE SIZE
NS	NEAR SIDE
NSP	NEW STANDARD PLAN
NTS	NOT TO SCALE

O

Oblr	OBLITERATE
OC	OVERCROSSING
OD	OUTSIDE DIAMETER
OF	OUTSIDE FACE
OG	ORIGINAL GROUND
OGAC	OPEN GRADED ASPHALT CONCRETE
OGFC	OPEN GRADED FRICTION COURSE
OH	OVERHEAD
OHWM	ORDINARY HIGH WATER MARK
O-O	OUT TO OUT
Opp	OPPOSITE
OSD	OVERSIDE DRAIN

P

P	PAGE
PAP	PERFORATED ALUMINUM PIPE
PB	PULL BOX
PC	POINT OF CURVATURE, PRECAST
PCC	POINT OF COMPOUND CURVE, PORTLAND CEMENT CONCRETE
PCMS	PORTABLE CHANGEABLE MESSAGE SIGN
PCP	PERFORATED CONCRETE PIPE, PRESTRESSED CONCRETE PIPE
PCVC	POINT OF COMPOUND VERTICAL CURVE
PEC	PERMIT TO ENTER AND CONSTRUCT
Ped	PEDESTRIAN
Ped OC	PEDESTRIAN OVERCROSSING
Ped UC	PEDESTRIAN UNDERCROSSING
Perm Mtl	PERMEABLE MATERIAL

P continued

PG	PROFILE GRADE
PI	POINT OF INTERSECTION
PJP	PARTIAL JOINT PENETRATION
Pkwy	PARKWAY
℄,PL	PLATE
P/L	PROPERTY LINE
PM	POST MILE, TIME FROM NOON TO MIDNIGHT
PN	PAVING NOTCH
POC	POINT OF HORIZONTAL CURVE
POT	POINT OF TANGENT
POVC	POINT OF VERTICAL CURVE
PP	PIPE PILE, PLASTIC PIPE, POWER POLE
PPL	PREFORMED PERMEABLE LINER
PPP	PERFORATED PLASTIC PIPE
PRC	POINT OF REVERSE CURVE
PRF	PAVEMENT REINFORCING FABRIC
PRVC	POINT OF REVERSE VERTICAL CURVE
PS&E	PLANS, SPECIFICATIONS AND ESTIMATES
PS, P/S	PRESTRESSED
PSP	PERFORATED STEEL PIPE
PT	POINT OF TANGENCY
PVC	POLYVINYL CHLORIDE
Pvmt	PAVEMENT

Q

Qty	QUANTITY

R

R	RADIUS
R & D	REMOVE AND DISPOSE
R & S	REMOVE AND SALVAGE
R/C	RATE OF CHANGE
RCA	REINFORCED CONCRETE ARCH
RCB	REINFORCED CONCRETE BOX
RCP	REINFORCED CONCRETE PIPE
RCPA	REINFORCED CONCRETE PIPE ARCH
Rd	ROAD
Reinf	REINFORCED, REINFORCEMENT, REINFORCING
Rel	RELOCATE
Repl	REPLACEMENT
Ret	RETAINING
Rev	REVISED, REVISION
Rdwy	ROADWAY
RHMA	RUBBERIZED HOT MIX ASPHALT
Riv	RIVER
RM	ROAD-MIXED
RP	RADIUS POINT, REFERENCE POINT
RR	RAILROAD
RSP	ROCK SLOPE PROTECTION, REVISED STANDARD PLAN
Rt	RIGHT
Rte	ROUTE
RW	REDWOOD, RETAINING WALL
R/W	RIGHT OF WAY
Rwy	RAILWAY

S

S	SOUTH, SUPPLEMENT
SAE	STRUCTURE APPROACH EMBANKMENT
Salv	SALVAGE
SAPP	STRUCTURAL ALUMINUM PLATE PIPE
SB	SOUTHBOUND
SC	SAND CUSHION
SCSP	SLOTTED CORRUGATED STEEL PIPE
SD	STORM DRAIN
Sec	SECOND, SECTION
Sep	SEPARATION
SG	SUBGRADE
Shld	SHOULDER
Sht	SHEET
Sim	SIMILAR
℄	STATION LINE
SM	SELECTED MATERIAL
Spec	SPECIAL, SPECIFICATIONS
SPP	SLOTTED PLASTIC PIPE
SS	SLOPE STAKE
SSBM	STRAP AND SADDLE BRACKET METHOD
SSD	STRUCTURAL SECTION DRAIN
SSPA	STRUCTURAL STEEL PLATE ARCH
SSPP	STRUCTURAL STEEL PLATE PIPE
SSPPA	STRUCTURAL STEEL PLATE PIPE ARCH
SSRP	STEEL SPIRAL RIB PIPE
St	STREET
Sta	STATION
STBB	SINGLE THRIE BEAM BARRIER
Std	STANDARD
Str	STRUCTURE
Surf	SURFACING
SW	SIDEWALK, SOUND WALL
Swr	SEWER
Sym	SYMMETRICAL
S4S	SURFACE 4 SIDES

T

T	SEMI-TANGENT
Tan	TANGENT
TBB	THRIE BEAM BARRIER
Tbr	TIMBER
TC	TOP OF CURB
TCB	TRAFFIC CONTROL BOX
TCE	TEMPORARY CONSTRUCTION EASEMENT
Tel	TELEPHONE
Temp	TEMPORARY
TG	TOP OF GRADE
Tot	TOTAL
TP	TELEPHONE POLE
TPB	TREATED PERMEABLE BASE
TPM	TREATED PERMEABLE MATERIAL
Trans	TRANSITION

T continued

TS	TRANSVERSE, TRAFFIC SIGNAL, TUBULAR STEEL
Typ	TYPICAL

U

UC	UNDERCROSSING
UD	UNDERDRAIN
UG	UNDERGROUND
UON	UNLESS OTHERWISE NOTED
UP	UNDERPASS

V

V	VALVE, DESIGN SPEED
Var	VARIABLE, VARIES
VC	VERTICAL CURVE
VCP	VITRIFIED CLAY PIPE
Vert	VERTICAL
Via	VIADUCT
Vol	VOLUME

W

W	WEST, WIDTH
WB	WESTBOUND
WH	WEEP HOLE
WM	WIRE MESH
WS	WATER SURFACE
WSP	WELDED STEEL PIPE
Wt	WEIGHT
WV	WATER VALVE
WW	WINGWALL
WWLOL	WINGWALL LAYOUT LINE

X

X Sec	CROSS SECTION
Xing	CROSSING

Y

Yr	YEAR
Yrs	YEARS

Dist	COUNTY	ROUTE	POST MILES TOTAL PROJECT	SHEET No.	TOTAL SHEETS
04	Ala	880	2.9/27.3	852	906

Grace M. Tsushima
REGISTERED CIVIL ENGINEER

July 19, 2013
PLANS APPROVAL DATE

Grace M. Tsushima No. C49814 Exp. 9-30-14 CIVIL — REGISTERED PROFESSIONAL ENGINEER — STATE OF CALIFORNIA

THE STATE OF CALIFORNIA OR ITS OFFICERS OR AGENTS SHALL NOT BE RESPONSIBLE FOR THE ACCURACY OR COMPLETENESS OF SCANNED COPIES OF THIS PLAN SHEET.

TO ACCOMPANY PLANS DATED 6-22-15

UNIT OF MEASUREMENT SYMBOLS:

Some of the symbols used in the project plan quantity tables and in the Bid Item List are:

TABLE A

SYMBOL USED	DEFINITIONS
ACRE	ACRE
CF	CUBIC FOOT
CY	CUBIC YARD
EA	EACH
GAL	GALLON
LB	POUND
LF	LINEAR FOOT
SQFT	SQUARE FOOT
SQYD	SQUARE YARD
STA	100 FEET
TAB	TABLET
TON	2,000 POUNDS

Some of the symbols used in the plans other than in the project plan quantity tables are:

TABLE B

SYMBOL USED	DEFINITIONS
ksi	KIPS PER SQUARE INCH
ksf	KIPS PER SQUARE FOOT
psi	POUNDS PER SQUARE INCH
psf	POUNDS PER SQUARE FOOT
lb/ft^3, pcf	POUNDS PER CUBIC FOOT
tsf	TONS PER SQUARE FOOT
mph, MPH *	MILES PER HOUR
ø	NOMINAL DIAMETER
oz	OUNCE
lb	POUND
kip	1,000 POUNDS
cal	CALORIE
ft	FOOT OR FEET
gal	GALLON

* For use on a sign panel only

STATE OF CALIFORNIA
DEPARTMENT OF TRANSPORTATION

ABBREVIATIONS (SHEET 2 OF 2)

NO SCALE

RSP A10B DATED JULY 19, 2013 SUPERSEDES STANDARD PLAN A10B DATED MAY 20, 2011 - PAGE 2 OF THE STANDARD PLANS BOOK DATED 2010.

REVISED STANDARD PLAN RSP A10B

2010 REVISED STANDARD PLAN RSP A10B

6-7-13

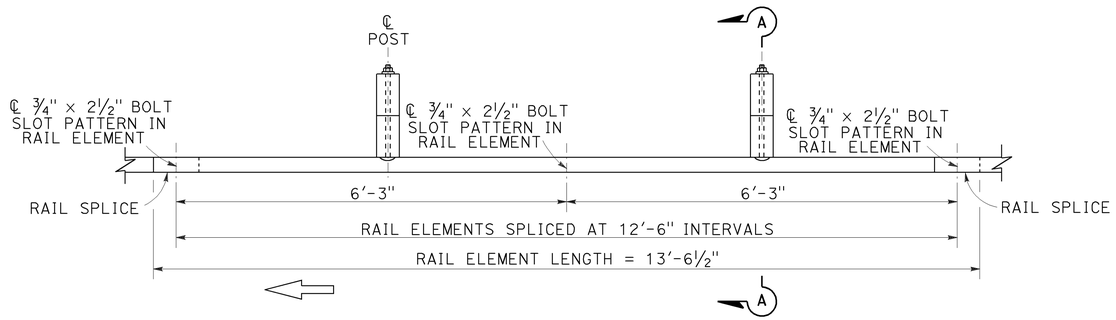

PLAN

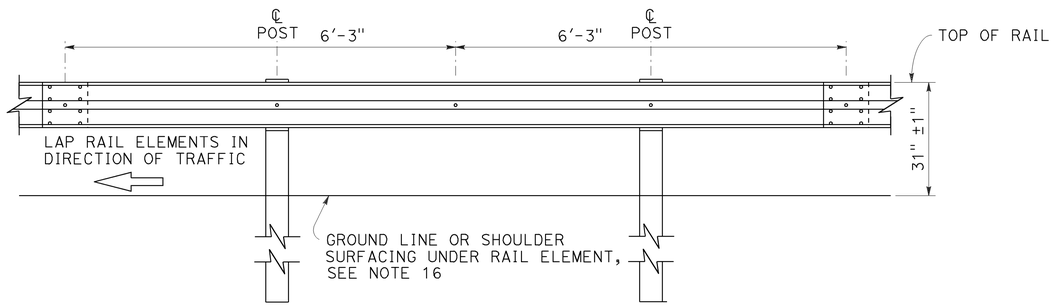

ELEVATION

MIDWEST GUARDRAIL SYSTEM WITH WOOD POST AND BLOCKS

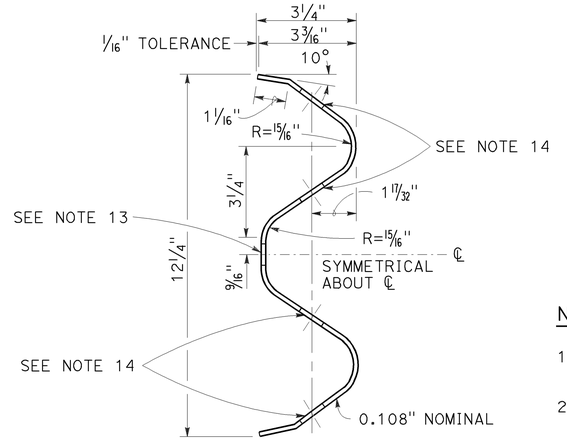

SECTION THRU RAIL ELEMENT

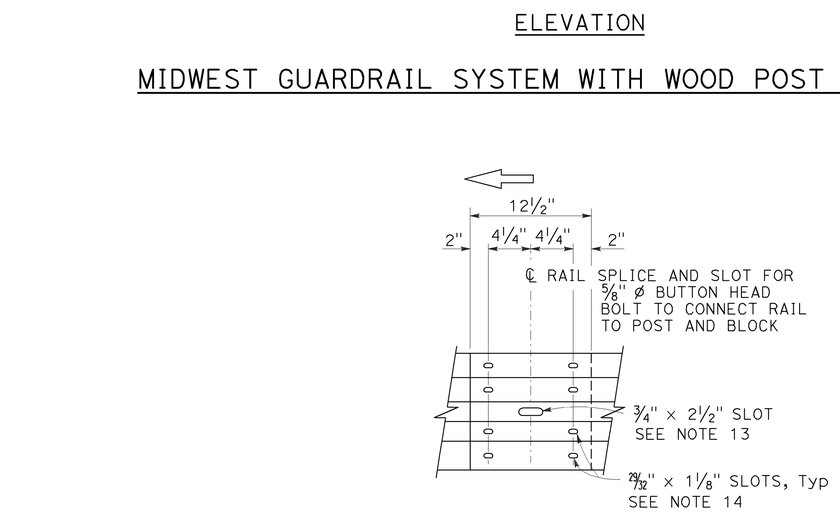

ELEVATION

RAIL ELEMENT SPLICE DETAIL

a) Connect the over lapped end of the rail elements with ⅝" ø x 1⅜" button head oval shoulder splice bolts inserted into the 29/32" x 1⅛" slots and bolted together with ⅝" ø recessed hex nuts. Recess of hex nut points toward rail element. A total of 8 bolts and nuts are to be used at each rail splice connection.

b) The ends of the rail elements are to be overlapped in the direction of traffic (see details).

c) Where end cap is to be attached to the end of a rail element, a total of 4 of the above described splice bolts and nuts are to be used.

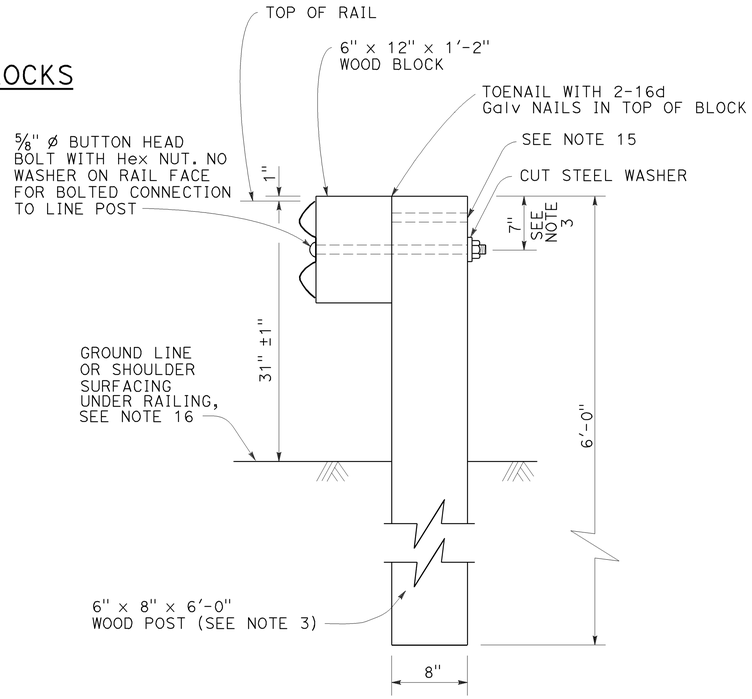

SECTION A-A

TYPICAL WOOD LINE POST INSTALLATION

See Note 4

NOTES:

1. For details of steel post installations, see Revised Standard Plan RSP A77L2.
2. For details of standard hardware used to construct MGS, see Revised Standard Plan RSP A77M1.
3. For details of wood posts and wood blocks used to construct MGS, see Revised Standard Plan RSP A77N1.
4. For additional installation details, see Revised Standard Plan RSP A77N3.
5. MGS post spacing to be 6'-3" center to center, except as otherwise noted.
6. For MGS typical layouts, see the A77P, A77Q and A77R Series of Standard Plans.
7. If railing is connected to terminal system end treatment, use 31" height terminal system end treatment.
8. For MGS end anchor details, see Revised Standard Plans RSP A77S1 and RSP A77T2.
9. For details of MGS transition to bridge railing, see Revised Standard Plan RSP A77U4.
10. For additional details of MSG connection to bridge railing, see Revised Standard Plans RSP A77U1, RSP A77U2 and RSP A77V1.
11. For MGS connection details to abutments and walls, see Revised Standard Plan RSP A77U3.
12. For typical MGS delineation and dike positioning details, see Revised Standard Plan RSP A77N4.
13. Slotted hole for bolted connection of rail element to block and post. See "Section Thru Rail Element".
14. Slotted holes for splice bolts to overlap ends of rail element. See "Section Thru Rail Element".
15. Additional hole in uppermost portion of line post is for potential future adjustments of railing height. See Revised Standard Plan RSP A77N1.
16. Install posts in soil.

Dist	COUNTY	ROUTE	POST MILES TOTAL PROJECT	SHEET No.	TOTAL SHEETS
04	Ala	880	2.9/27.3	853	906

Randell D. Hiatt
REGISTERED CIVIL ENGINEER

July 19, 2013
PLANS APPROVAL DATE

REGISTERED PROFESSIONAL ENGINEER — Randell D. Hiatt — No. C50200 — Exp. 6-30-15 — CIVIL — STATE OF CALIFORNIA

THE STATE OF CALIFORNIA OR ITS OFFICERS OR AGENTS SHALL NOT BE RESPONSIBLE FOR THE ACCURACY OR COMPLETENESS OF SCANNED COPIES OF THIS PLAN SHEET.

TO ACCOMPANY PLANS DATED 6-22-15

STATE OF CALIFORNIA
DEPARTMENT OF TRANSPORTATION

MIDWEST GUARDRAIL SYSTEM STANDARD RAILING SECTION (WOOD POST WITH WOOD BLOCK)

NO SCALE

RSP A77L1 DATED JULY 19, 2013 SUPPLEMENTS STANDARD PLANS BOOK DATED 2010.

REVISED STANDARD PLAN RSP A77L1

2010 REVISED STANDARD PLAN RSP A77L1

7-3-13

Dist	COUNTY	ROUTE	POST MILES TOTAL PROJECT	SHEET No.	TOTAL SHEETS
04	Ala	880	2.9/27.3	854	906

Randell D. Hiatt
REGISTERED CIVIL ENGINEER

July 19, 2013
PLANS APPROVAL DATE

REGISTERED PROFESSIONAL ENGINEER
Randell D. Hiatt
No. C50200
Exp. 6-30-15
CIVIL
STATE OF CALIFORNIA

THE STATE OF CALIFORNIA OR ITS OFFICERS OR AGENTS SHALL NOT BE RESPONSIBLE FOR THE ACCURACY OR COMPLETENESS OF SCANNED COPIES OF THIS PLAN SHEET.

TO ACCOMPANY PLANS DATED 6-22-15

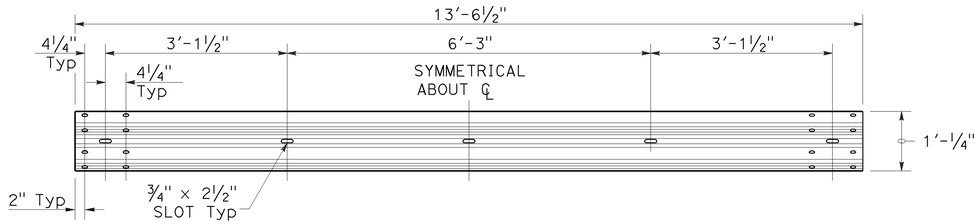

TYPICAL RAIL ELEMENT

NOTE:

1. Slotted holes for splice bolts to overlap ends of rail element.

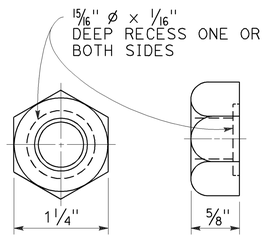

⅝" ø RECESS NUT

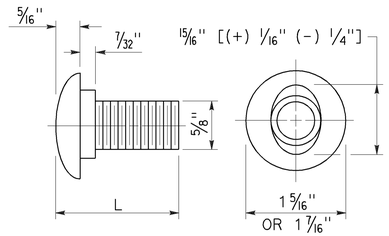

⅝" ø BUTTON HEAD BOLT

BUTTON HEAD BOLT

L	THREAD LENGTH
1⅜"	FULL THREAD LENGTH
2"	FULL THREAD LENGTH
10"	4" Min THREAD LENGTH
18"	4" Min THREAD LENGTH
20"	4" Min THREAD LENGTH
22"	4" Min THREAD LENGTH
26"	4" Min THREAD LENGTH
36"	4" Min THREAD LENGTH
** 2¾"	2" Min THREAD LENGTH
** 19"	4" Min THREAD LENGTH

** For nested rail applications.

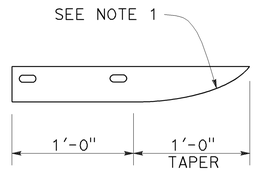

PLAN

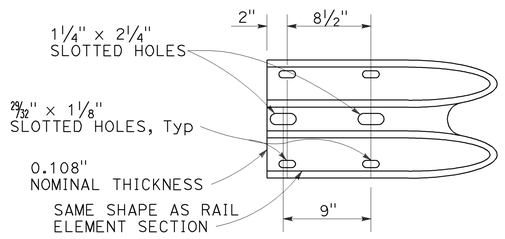

ELEVATION

END CAP (TYPE A)

STATE OF CALIFORNIA
DEPARTMENT OF TRANSPORTATION

MIDWEST GUARDRAIL SYSTEM STANDARD HARDWARE

NO SCALE

RSP A77M1 DATED JULY 19, 2013 SUPPLEMENTS THE STANDARD PLANS BOOK DATED 2010.

REVISED STANDARD PLAN RSP A77M1

2010 REVISED STANDARD PLAN RSP A77M1

7-3-13

Dist	COUNTY	ROUTE	POST MILES TOTAL PROJECT	SHEET No.	TOTAL SHEETS
04	Ala	880	2.9/27.3	855	906

Randell D. Hiatt
REGISTERED CIVIL ENGINEER

July 19, 2013
PLANS APPROVAL DATE

REGISTERED PROFESSIONAL ENGINEER
Randell D. Hiatt
No. C50200
Exp. 6-30-15
CIVIL
STATE OF CALIFORNIA

THE STATE OF CALIFORNIA OR ITS OFFICERS OR AGENTS SHALL NOT BE RESPONSIBLE FOR THE ACCURACY OR COMPLETENESS OF SCANNED COPIES OF THIS PLAN SHEET.

TO ACCOMPANY PLANS DATED 6-22-15

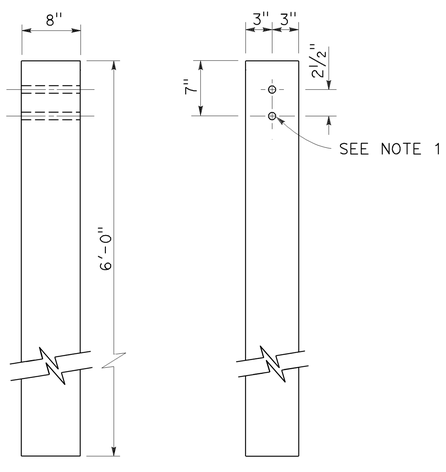

SIDE FRONT

6" x 8" WOOD POST
See Note 3

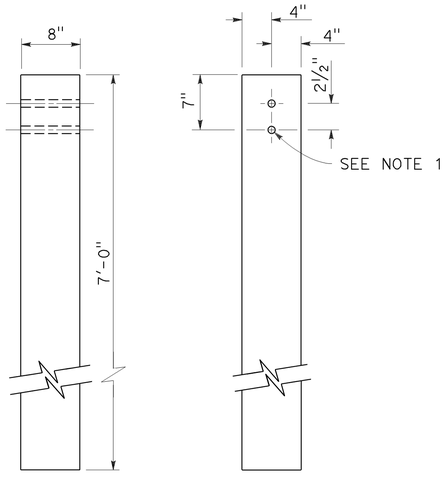

SIDE FRONT

8" x 8" WOOD POST
See Note 4

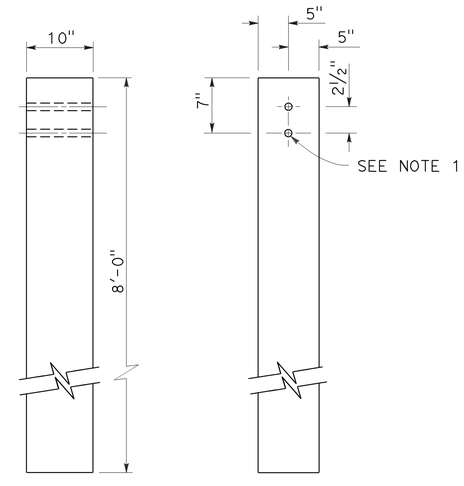

SIDE FRONT

10" x 10" WOOD POST
See Note 5

NOTES:

1. All holes in wood posts and blocks shall be ¾" Dia ± 1/16".
2. Dimensions shown for wood post are nominal.
3. This post and block combination used for standard line post sections of MGS.
4. This post and 8" x 12" block combination used for line post sections of MGS on narrow roadways.
5. This post and 8" x 12" block combination is typically used where strengthened line post sections of MGS are warranted to shield fixed objects.
6. See Revised Standard Plan RSP A77L3 for use of 6" x 8" and 8" x 8" wood blocks.

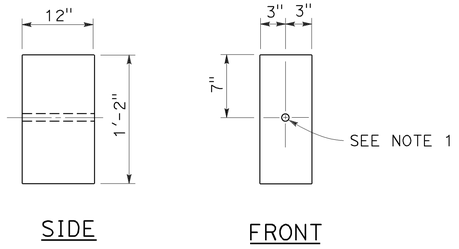

SIDE FRONT

6" x 12" WOOD BLOCK
See Note 3

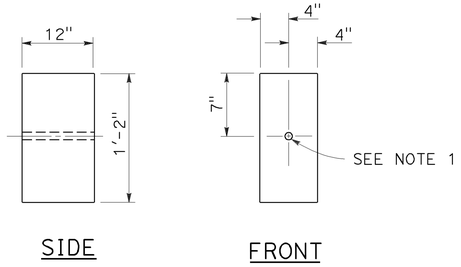

SIDE FRONT

8" x 12" WOOD BLOCK

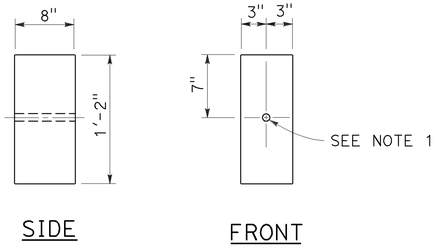

SIDE FRONT

6" x 8" WOOD BLOCK
Only for use with metal beam guard rail see Note 6

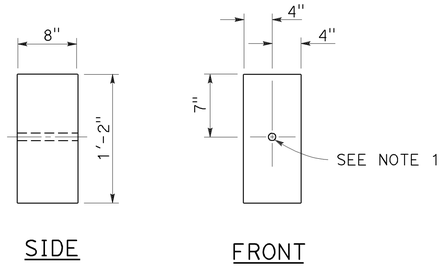

SIDE FRONT

8" x 8" WOOD BLOCK
Only for use with metal beam guard rail see Note 6

STATE OF CALIFORNIA
DEPARTMENT OF TRANSPORTATION

MIDWEST GUARDRAIL SYSTEM WOOD POST AND WOOD BLOCK DETAILS

NO SCALE

RSP A77N1 DATED JULY 19, 2013 SUPPLEMENTS THE STANDARD PLANS BOOK DATED 2010.

REVISED STANDARD PLAN RSP A77N1

2010 REVISED STANDARD PLAN RSP A77N1

7-3-13

Dist	COUNTY	ROUTE	POST MILES TOTAL PROJECT	SHEET No.	TOTAL SHEETS
04	Ala	880	2.9/27.3	856	906

Randell D. Hiatt
REGISTERED CIVIL ENGINEER

November 15, 2013
PLANS APPROVAL DATE

REGISTERED PROFESSIONAL ENGINEER
Randell D. Hiatt
No. C50200
Exp. 6-30-15
CIVIL
STATE OF CALIFORNIA

THE STATE OF CALIFORNIA OR ITS OFFICERS OR AGENTS SHALL NOT BE RESPONSIBLE FOR THE ACCURACY OR COMPLETENESS OF SCANNED COPIES OF THIS PLAN SHEET.

TO ACCOMPANY PLANS DATED 6-22-15

2010 REVISED STANDARD PLAN RSP A77N3

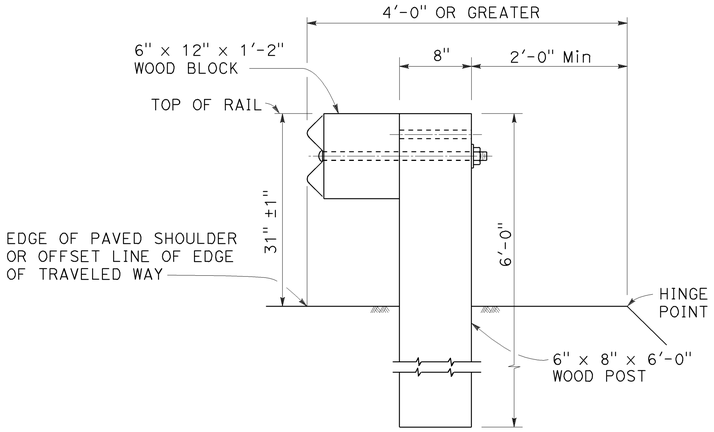

DETAIL A

TYPICAL ROADWAY INSTALLATION

See Note 1

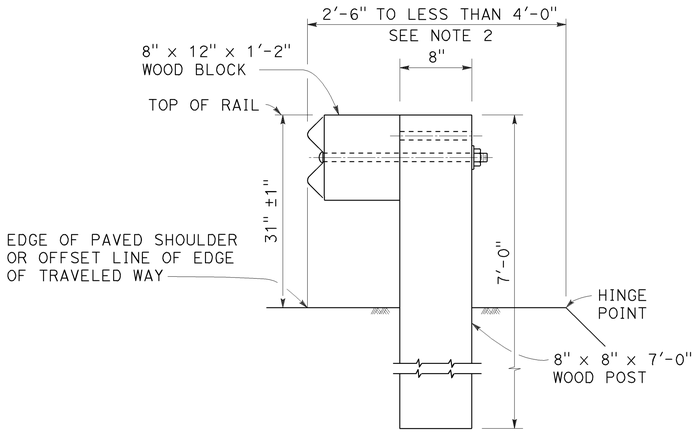

DETAIL B

NARROW ROADWAY INSTALLATION

See Note 1

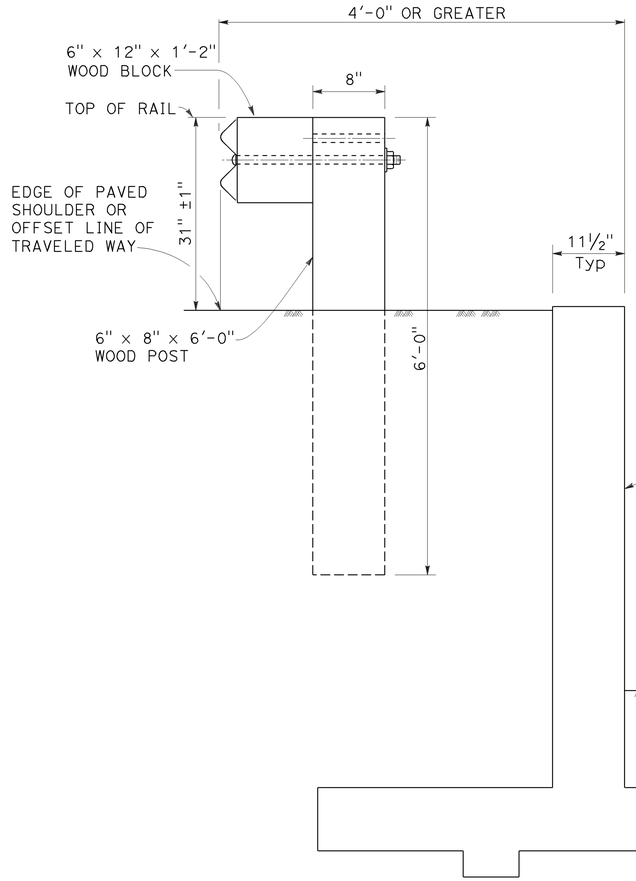

DETAIL C

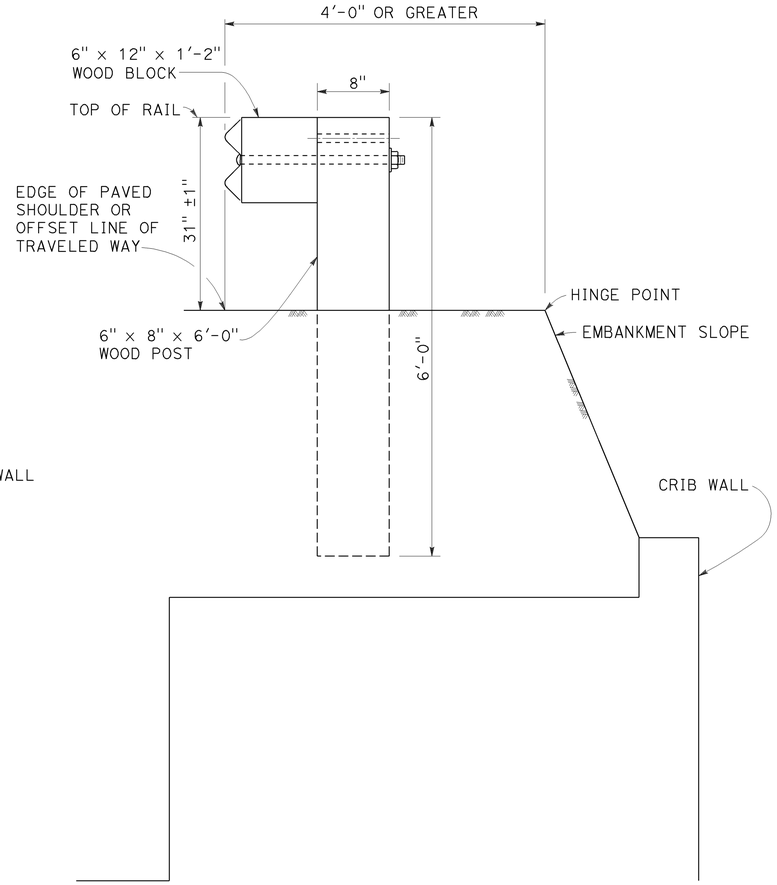

DETAIL D

POST EMBEDMENT

INSTALLATION AT EARTH RETAINING WALLS

NOTES:

1. These installation details also applicable to steel line post installations. For Detail A, C, and D, where steel line post installations are constructed, W6 x 8.5 or W6 x 9 steel post, 6'-0" in length, with 6" x 12" x 1'-2" notched wood blocks or notched recycled plastic blocks are to be used in place of the size of wood post and wood block shown. For Detail B, where steel line post installations are constructed, W6 x 15 steel post, 8'-0" in length, with 8" x 12" x 1'-2" notched wood blocks or notched recycled plastic blocks are to be used in place of the size of wood post and wood block shown. For additional installation details, see Revised Standard Plan RSP A77L1 and RSP A77L2.
2. Where the distance between the face of the rail and the hinge point is less than 2'-6", see the Project Plans for special details.
3. For dike positioning with MGS installations, see Revised Standard Plan RSP A77N4.

STATE OF CALIFORNIA
DEPARTMENT OF TRANSPORTATION

MIDWEST GUARDRAIL SYSTEM TYPICAL LINE POST EMBEDMENT AND HINGE POINT OFFSET DETAILS

NO SCALE

RSP A77N3 DATED NOVEMBER 15, 2013 SUPERSEDES RSP A77N3 DATED JULY 19, 2013 THAT SUPPLEMENTS THE STANDARD PLANS BOOK DATED 2010.

REVISED STANDARD PLAN RSP A77N3

10-29-13

Dist	COUNTY	ROUTE	POST MILES TOTAL PROJECT	SHEET No.	TOTAL SHEETS
04	Ala	880	2.9/27.3	857	906

Randell D. Hiatt
REGISTERED CIVIL ENGINEER

July 19, 2013
PLANS APPROVAL DATE

REGISTERED PROFESSIONAL ENGINEER
Randell D. Hiatt
No. C50200
Exp. 6-30-15
CIVIL
STATE OF CALIFORNIA

THE STATE OF CALIFORNIA OR ITS OFFICERS OR AGENTS SHALL NOT BE RESPONSIBLE FOR THE ACCURACY OR COMPLETENESS OF SCANNED COPIES OF THIS PLAN SHEET.

TO ACCOMPANY PLANS DATED 6-22-15

NOTES:

1. When necessary to place dike more than 7" in front of face of MGS, only Type C dike may be used. For dike details, see Revised Standard Plan RSP A87B.
2. For standard railing post embedment, see Revised Standard Plan RSP A77N3.
3. MGS delineation to be used where shown on the Project Plans.
4. When dike or curb is placed under MGS, the maximum height of the dike or curb shall be 6". Mountable dike should not be used. For dike and curb details, see Revised Standard Plans RSP A87A and RSP A87B.
5. For details of typical distance between the face of rail and hinge point, see Revised Standard Plan RSP A77N3.
6. For steel line posts, use 1/4 - 20 self-tapping screws in 0.22" diameter holes or 1/4" bolts in 9/32" diameter holes.

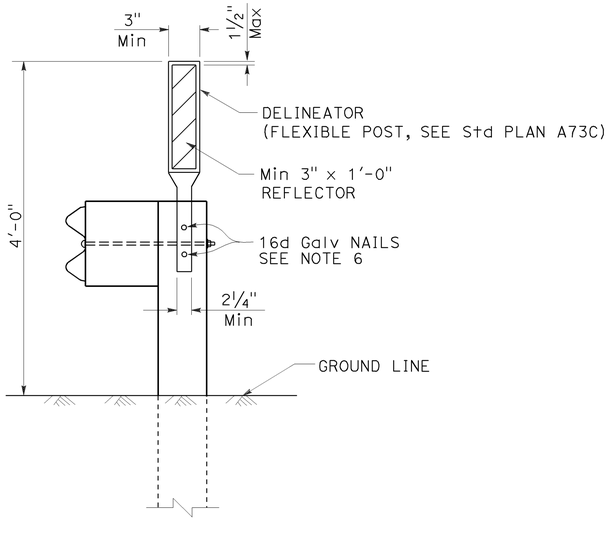

MGS DELINEATION

See Note 3

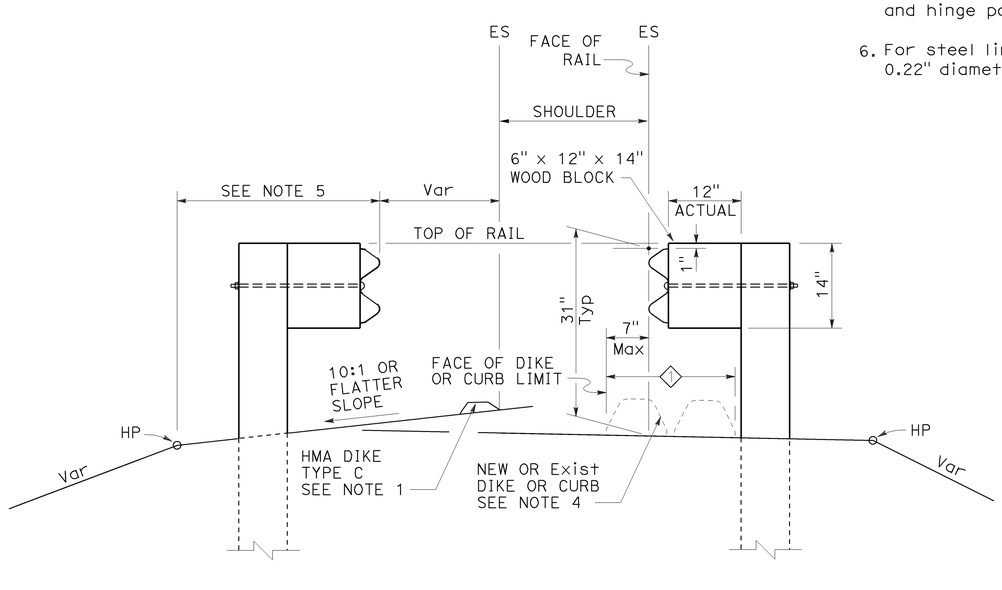

DIKE POSITIONING

See Note 1

◇1 PERMISSIBLE DIKE OR CURB PLACEMENT AREA

STATE OF CALIFORNIA
DEPARTMENT OF TRANSPORTATION

MIDWEST GUARDRAIL SYSTEM TYPICAL RAILING DELINEATION AND DIKE POSITIONING DETAILS

NO SCALE

RSP A77N4 DATED JULY 19, 2013 SUPPLEMENTS THE STANDARD PLANS BOOK DATED 2010.

REVISED STANDARD PLAN RSP A77N4

2010 REVISED STANDARD PLAN RSP A77N4

7-10-13

Dist	COUNTY	ROUTE	POST MILES TOTAL PROJECT	SHEET No.	TOTAL SHEETS
04	Ala	880	2.9/27.3	858	906

Randell D. Hiatt
REGISTERED CIVIL ENGINEER

July 19, 2013
PLANS APPROVAL DATE

REGISTERED PROFESSIONAL ENGINEER
Randell D. Hiatt
No. C50200
Exp. 6-30-15
CIVIL
STATE OF CALIFORNIA

THE STATE OF CALIFORNIA OR ITS OFFICERS OR AGENTS SHALL NOT BE RESPONSIBLE FOR THE ACCURACY OR COMPLETENESS OF SCANNED COPIES OF THIS PLAN SHEET.

TO ACCOMPANY PLANS DATED 6-22-15

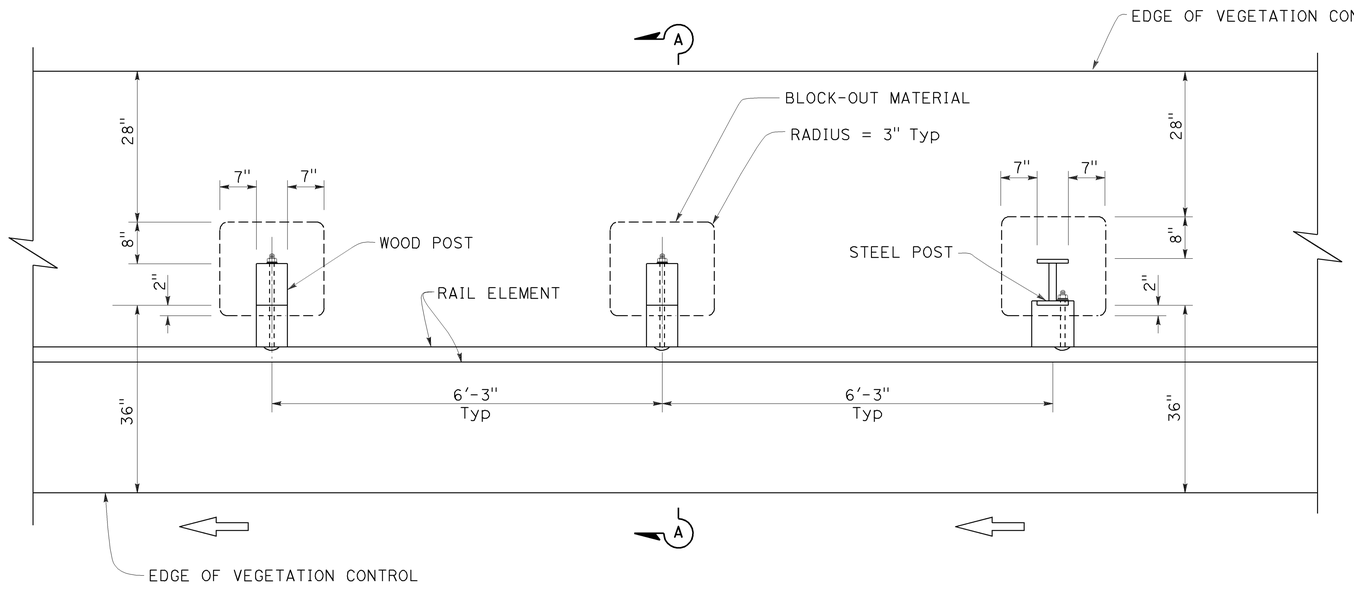

PLAN

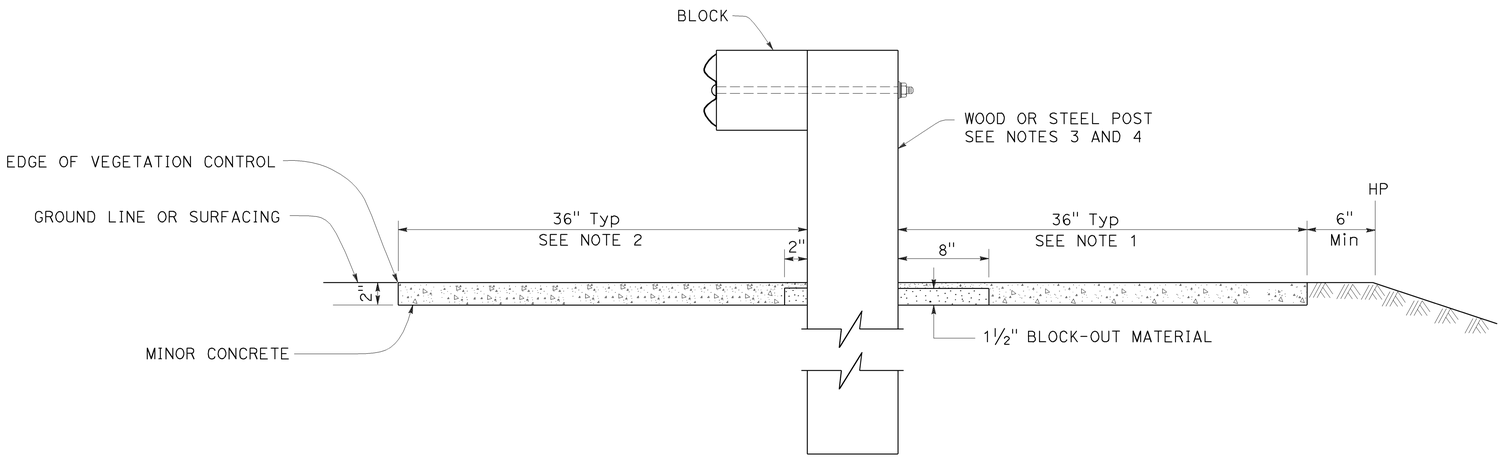

SECTION A-A

NOTES:

1. Where the distance between back of post and hinge point is less than 42", construct vegetation control to 6" from hinge point while maintaining the 8" block-out at back of post. If the 8" block-out at back of post can not be maintained, construct vegetation control flush with the back edge of post.
2. Where dike is constructed under railing, construct vegetation control to back edge of dike. Where paved shoulder is constructed within 36" in front of the post, construct vegetation control to the edge of paved shoulder.
3. For wood post sizes, see Revised Standard Plan RSP A77N1.
4. For steel post sizes, see Revised Standard Plan RSP A77N2.
5. For details not shown, see Revised Standard Plans RSP A77L1 and RSP A77L2.

STATE OF CALIFORNIA
DEPARTMENT OF TRANSPORTATION

MIDWEST GUARDRAIL SYSTEM
TYPICAL VEGETATION CONTROL
STANDARD RAILING SECTION

NO SCALE

RSP A77N5 DATED JULY 19, 2013 SUPPLEMENTS THE STANDARD PLANS BOOK DATED 2010.

REVISED STANDARD PLAN RSP A77N5

2010 REVISED STANDARD PLAN RSP A77N5

7-3-13

Dist	COUNTY	ROUTE	POST MILES TOTAL PROJECT	SHEET No.	TOTAL SHEETS
04	Ala	880	2.9/27.3	859	906

Randell D. Hiatt
REGISTERED CIVIL ENGINEER

July 19, 2013
PLANS APPROVAL DATE

REGISTERED PROFESSIONAL ENGINEER
Randell D. Hiatt
No. C50200
Exp. 6-30-15
CIVIL
STATE OF CALIFORNIA

THE STATE OF CALIFORNIA OR ITS OFFICERS OR AGENTS SHALL NOT BE RESPONSIBLE FOR THE ACCURACY OR COMPLETENESS OF SCANNED COPIES OF THIS PLAN SHEET.

TO ACCOMPANY PLANS DATED 6-22-15

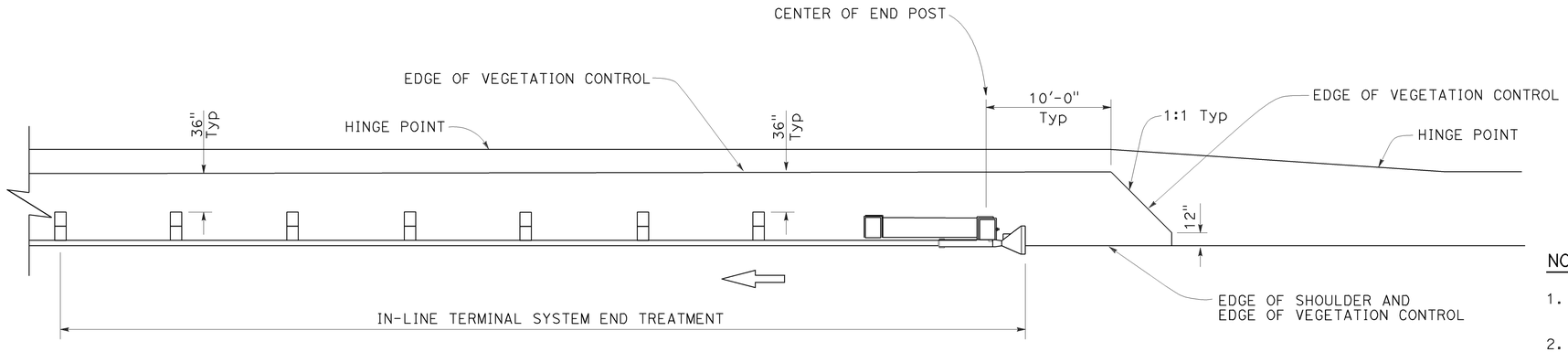

PLAN

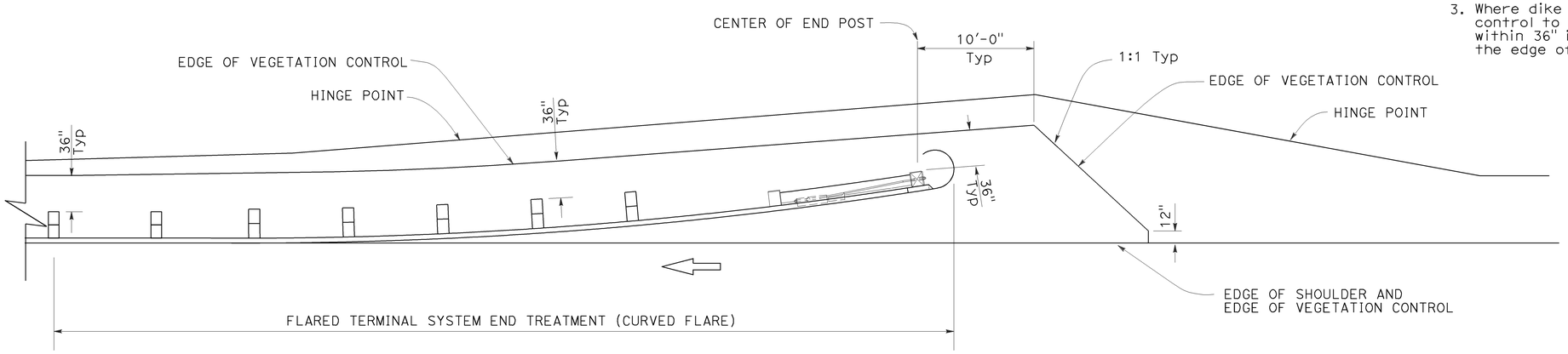

PLAN

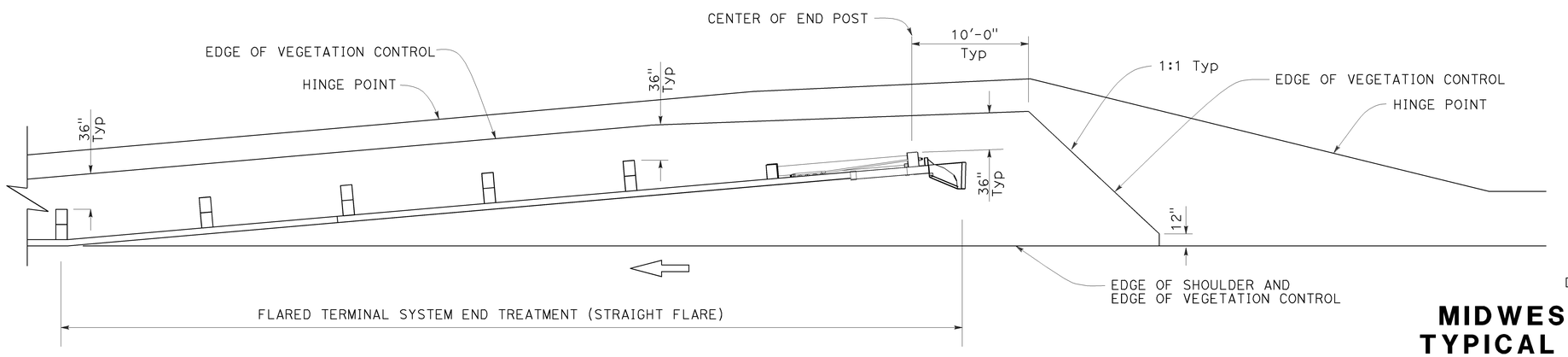

PLAN

NOTES:

1. See Revised Standard Plan RSP A77N5 for additional vegetation control details.
2. Where the distance between back of post and hinge point is less than 42", construct vegetation control to 6" from hinge point while maintaining the 8" block-out at back of post. If the 8" block-out at back of post can not be maintained, construct vegetation control flush with the back edge of post.
3. Where dike is constructed under railing, construct vegetation control to back edge of dike. Where paved shoulder is constructed within 36" in front of the post, construct vegetation control to the edge of paved shoulder.

STATE OF CALIFORNIA
DEPARTMENT OF TRANSPORTATION

MIDWEST GUARDRAIL SYSTEM TYPICAL VEGETATION CONTROL FOR TERMINAL SYSTEM END TREATMENTS

NO SCALE

RSP A77N6 DATED JULY 19, 2013 SUPPLEMENTS THE STANDARD PLANS BOOK DATED 2010.

REVISED STANDARD PLAN RSP A77N6

2010 REVISED STANDARD PLAN RSP A77N6

6-12-13

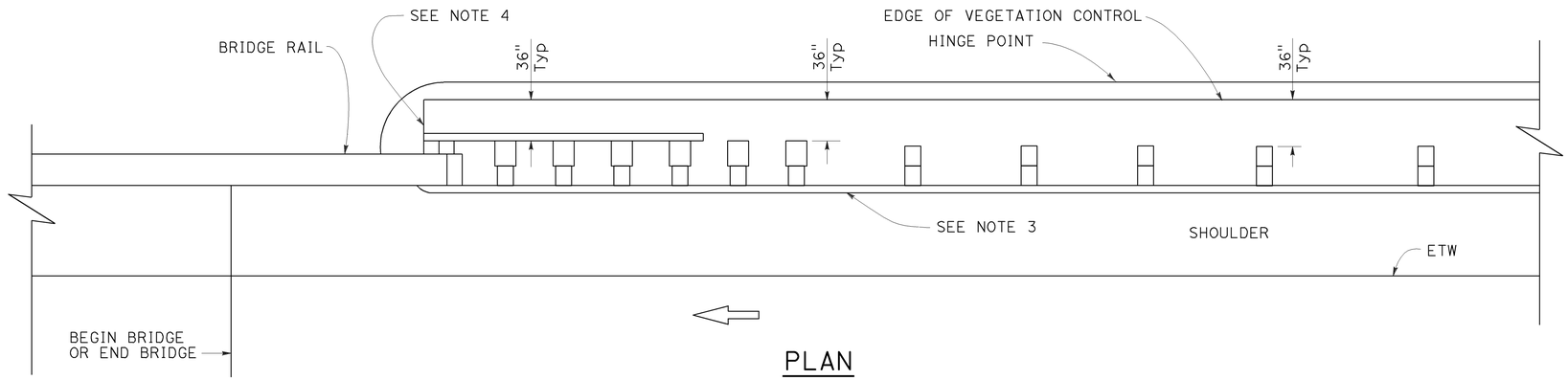

PLAN

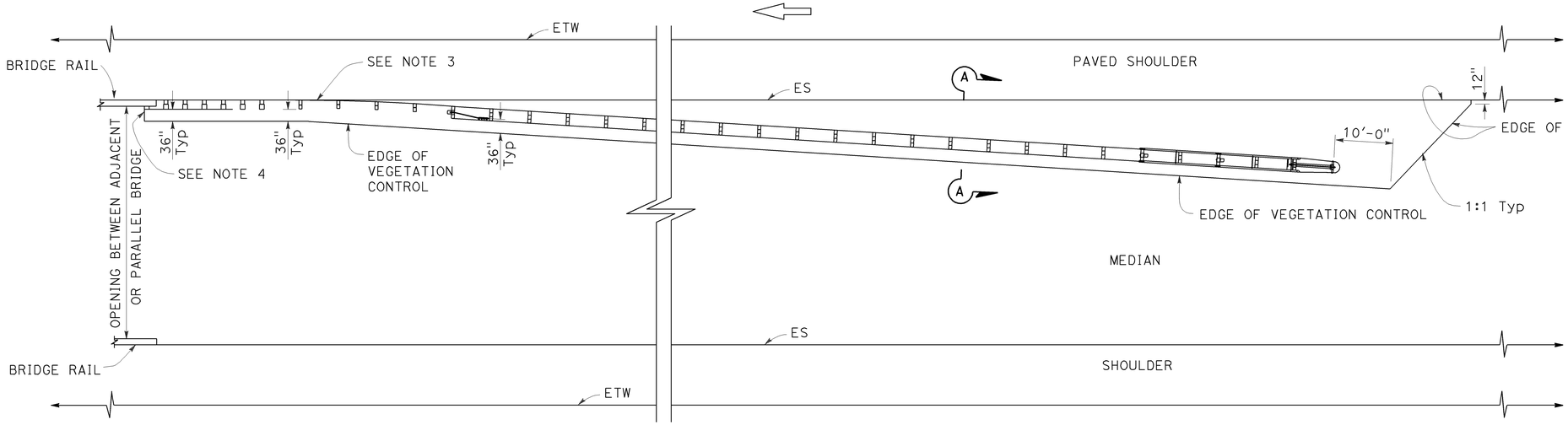

PLAN

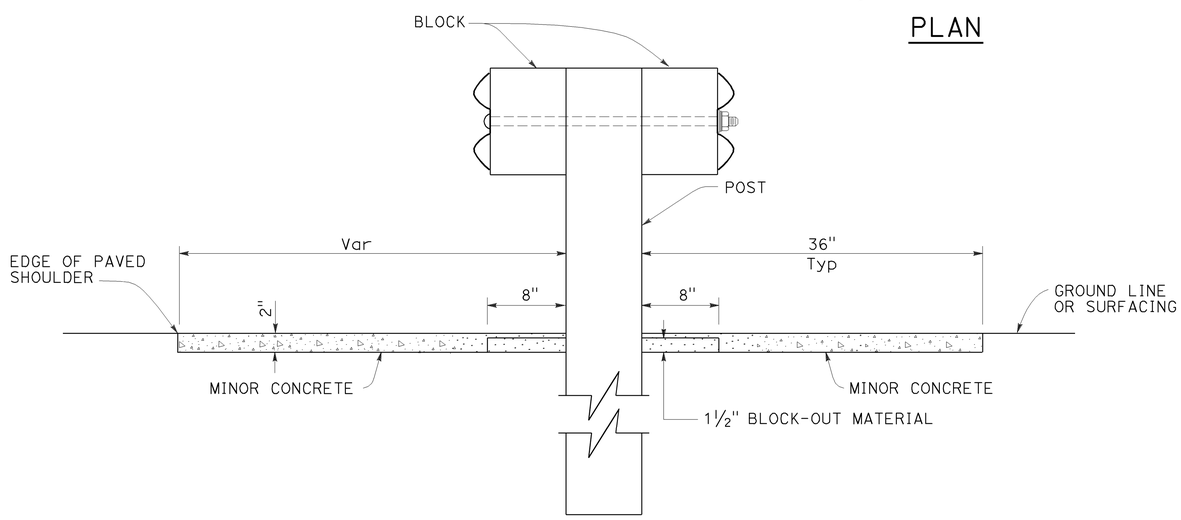

SECTION A-A

NOTES:

1. See Revised Standard Plan RSP A77N5 for additional vegetation control details.
2. Where the distance between back of post and hinge point is less than 42", construct vegetation control to 6" from hinge point while maintaining the 8" block-out at back of post. If the 8" block-out at back of post can not be maintained, construct vegetation control flush with the back edge of post.
3. Where dike is constructed under railing, construct vegetation control to back edge of dike. Where paved shoulder is constructed within 36" in front of the post, construct vegetation control to the edge of paved shoulder.
4. End vegetation control at end of backside rail element.

STATE OF CALIFORNIA
DEPARTMENT OF TRANSPORTATION

MIDWEST GUARDRAIL SYSTEM TYPICAL VEGETATION CONTROL AT STRUCTURE APPROACH

NO SCALE

RSP A77N7 DATED JULY 19, 2013 SUPPLEMENTS THE STANDARD PLANS BOOK DATED 2010.

REVISED STANDARD PLAN RSP A77N7

Dist	COUNTY	ROUTE	POST MILES TOTAL PROJECT	SHEET No.	TOTAL SHEETS
04	Ala	880	2.9/27.3	860	906

Randell D. Hiatt
REGISTERED CIVIL ENGINEER

July 19, 2013
PLANS APPROVAL DATE

REGISTERED PROFESSIONAL ENGINEER
Randell D. Hiatt
No. C50200
Exp. 6-30-15
CIVIL
STATE OF CALIFORNIA

THE STATE OF CALIFORNIA OR ITS OFFICERS OR AGENTS SHALL NOT BE RESPONSIBLE FOR THE ACCURACY OR COMPLETENESS OF SCANNED COPIES OF THIS PLAN SHEET.

TO ACCOMPANY PLANS DATED 6-22-15

2010 REVISED STANDARD PLAN RSP A77N7

6-12-13

Dist	COUNTY	ROUTE	POST MILES TOTAL PROJECT	SHEET No.	TOTAL SHEETS
04	Ala	880	2.9/27.3	861	906

Randell D. Hiatt
REGISTERED CIVIL ENGINEER

July 19, 2013
PLANS APPROVAL DATE

REGISTERED PROFESSIONAL ENGINEER
Randell D. Hiatt
No. C50200
Exp. 6-30-15
CIVIL
STATE OF CALIFORNIA

THE STATE OF CALIFORNIA OR ITS OFFICERS OR AGENTS SHALL NOT BE RESPONSIBLE FOR THE ACCURACY OR COMPLETENESS OF SCANNED COPIES OF THIS PLAN SHEET.

TO ACCOMPANY PLANS DATED 6-22-15

NOTES:

1. See Revised Standard Plan RSP A77N5 for additional vegetation control details.
2. Where the distance between back of post and hinge point is less than 42", construct vegetation control to 6" from hinge point while maintaining the 8" block-out at back of post. If the 8" block-out at back of post can not be maintained, construct vegetation control flush with the back edge of post.
3. Where dike is constructed under railing, construct vegetation control to back edge of dike. Where paved shoulder is constructed within 36" in front of the post, construct vegetation control to the edge of paved shoulder.

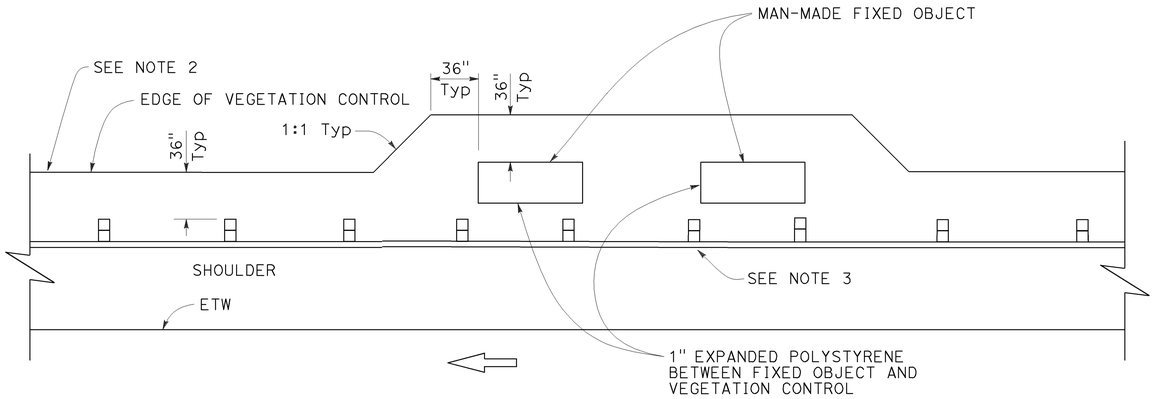

PLAN

Fixed object(s) on shoulder

STATE OF CALIFORNIA
DEPARTMENT OF TRANSPORTATION

MIDWEST GUARDRAIL SYSTEM
TYPICAL VEGETATION CONTROL AT FIXED OBJECT

NO SCALE

RSP A77N8 DATED JULY 19, 2013 SUPPLEMENTS THE STANDARD PLANS BOOK DATED 2010.

REVISED STANDARD PLAN RSP A77N8

2010 REVISED STANDARD PLAN RSP A77N8

6-12-13

NOTES:

1. See Revised Standard Plan RSP A77N5 for additional vegetation control details.

2. Where dike is constructed under railing, construct vegetation control to back edge of dike. Where paved shoulder is constructed within 36" in front of the post, construct vegetation control to the edge of paved shoulder.

Dist	COUNTY	ROUTE	POST MILES TOTAL PROJECT	SHEET No.	TOTAL SHEETS
04	Ala	880	2.9/27.3	862	906

Randell D. Hiatt
REGISTERED CIVIL ENGINEER

July 19, 2013
PLANS APPROVAL DATE

REGISTERED PROFESSIONAL ENGINEER
Randell D. Hiatt
No. C50200
Exp. 6-30-15
CIVIL
STATE OF CALIFORNIA

THE STATE OF CALIFORNIA OR ITS OFFICERS OR AGENTS SHALL NOT BE RESPONSIBLE FOR THE ACCURACY OR COMPLETENESS OF SCANNED COPIES OF THIS PLAN SHEET.

TO ACCOMPANY PLANS DATED 6-22-15

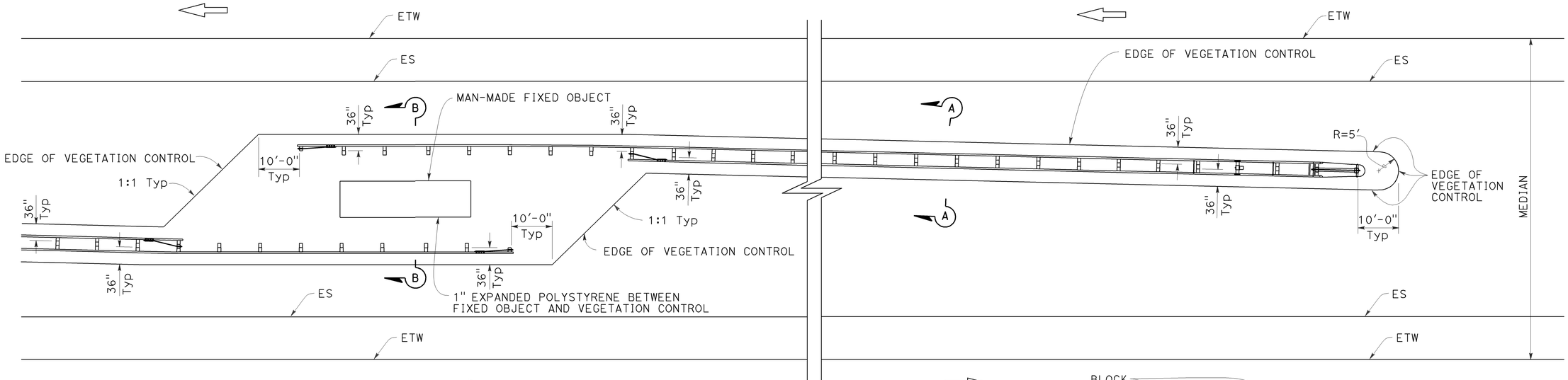

PLAN

Fixed object(s) in median

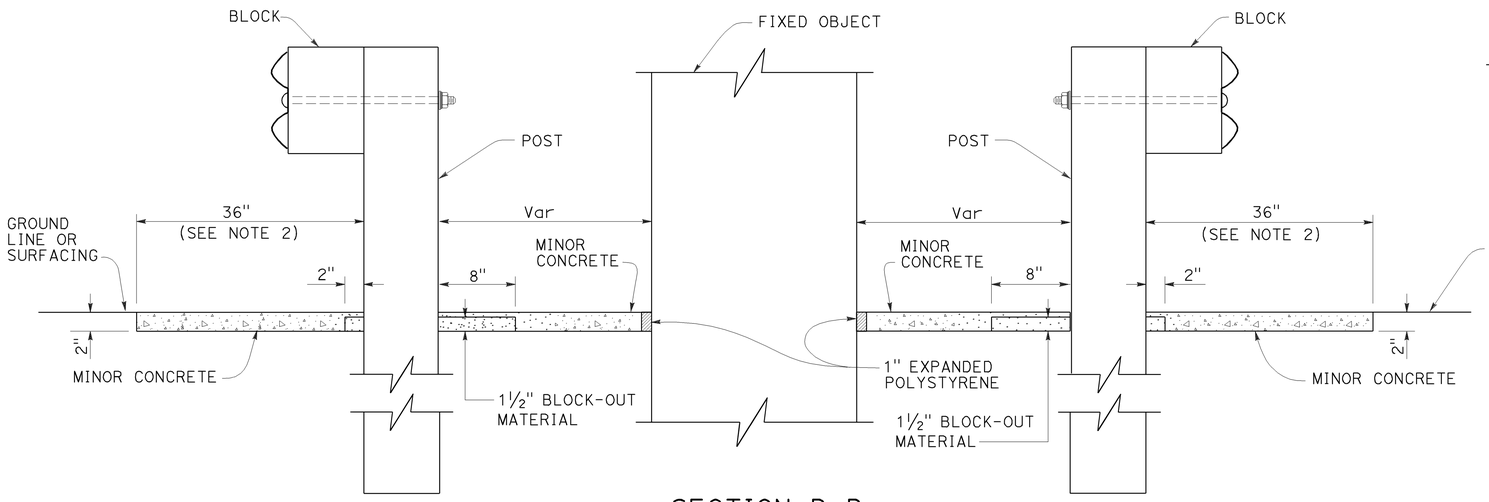

SECTION B-B

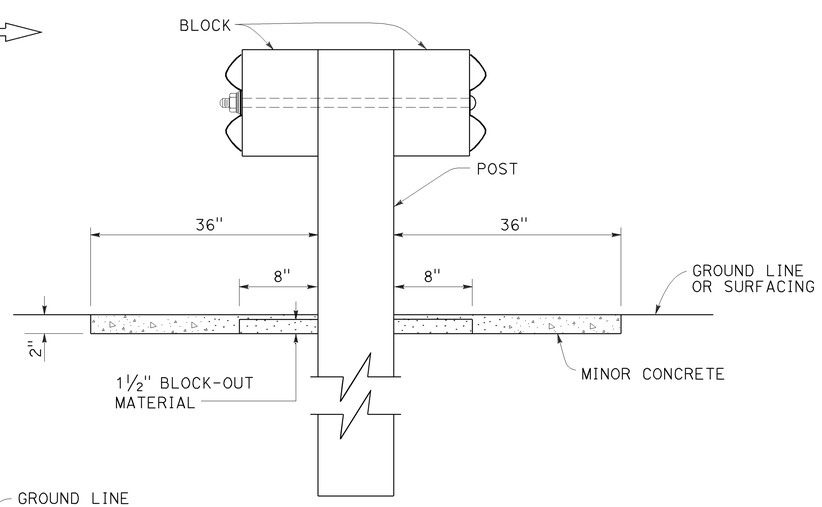

SECTION A-A

STATE OF CALIFORNIA
DEPARTMENT OF TRANSPORTATION

MIDWEST GUARDRAIL SYSTEM TYPICAL VEGETATION CONTROL AT FIXED OBJECT

NO SCALE

RSP A77N9 DATED JULY 19, 2013 SUPPLEMENTS THE STANDARD PLANS BOOK DATED 2010.

REVISED STANDARD PLAN RSP A77N9

2010 REVISED STANDARD PLAN RSP A77N9

6-12-13

NOTES:

1. See Revised Standard Plan RSP A77N5 for additional vegetation control details.
2. Where dike is constructed under railing, construct vegetation control to back edge of dike. Where paved shoulder is constructed within 36" in front of the post, construct vegetation control to the edge of paved shoulder.

Dist	COUNTY	ROUTE	POST MILES TOTAL PROJECT	SHEET No.	TOTAL SHEETS
04	Ala	880	2.9/27.3	863	906

Randell D. Hiatt
REGISTERED CIVIL ENGINEER

July 19, 2013
PLANS APPROVAL DATE

REGISTERED PROFESSIONAL ENGINEER — Randell D. Hiatt — No. C50200 — Exp. 6-30-15 — CIVIL — STATE OF CALIFORNIA

THE STATE OF CALIFORNIA OR ITS OFFICERS OR AGENTS SHALL NOT BE RESPONSIBLE FOR THE ACCURACY OR COMPLETENESS OF SCANNED COPIES OF THIS PLAN SHEET.

TO ACCOMPANY PLANS DATED 6-22-15

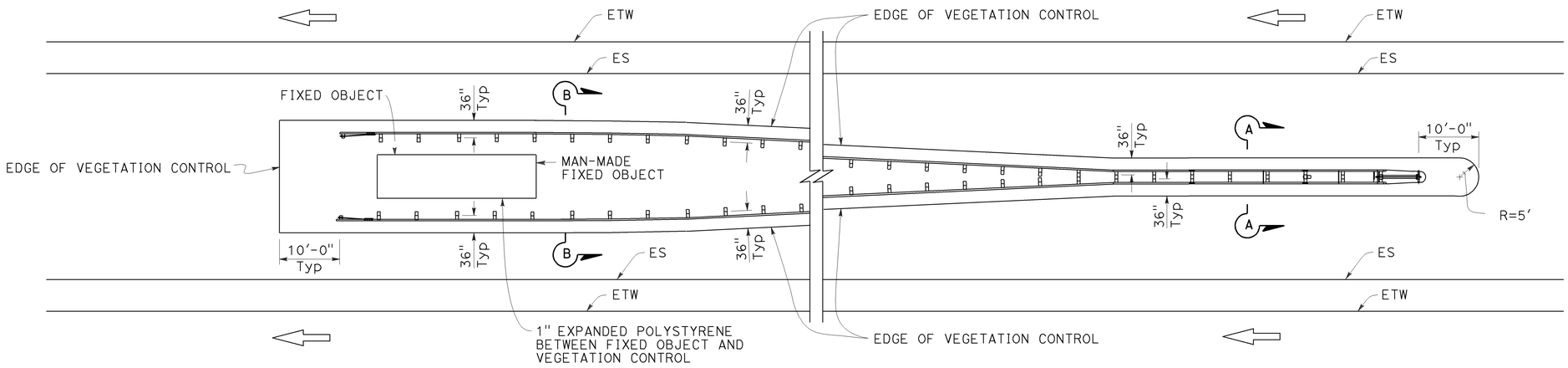

PLAN

Fixed object(s) between separate roadbeds
(One-Way Traffic)

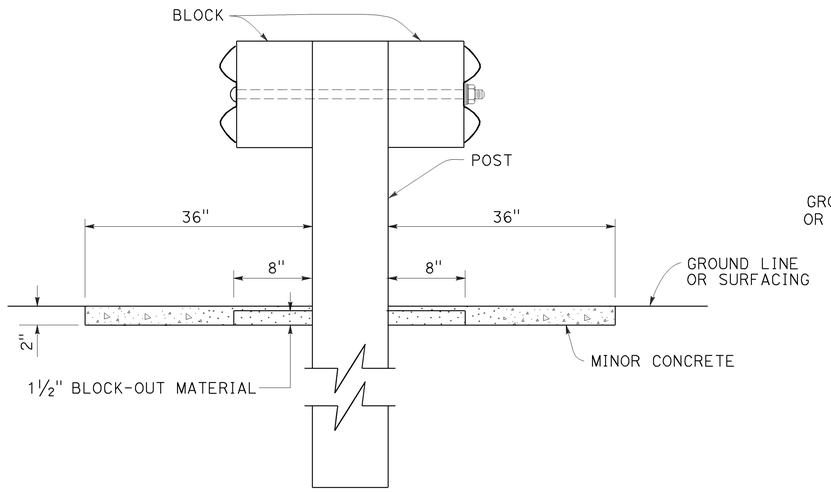

SECTION A-A

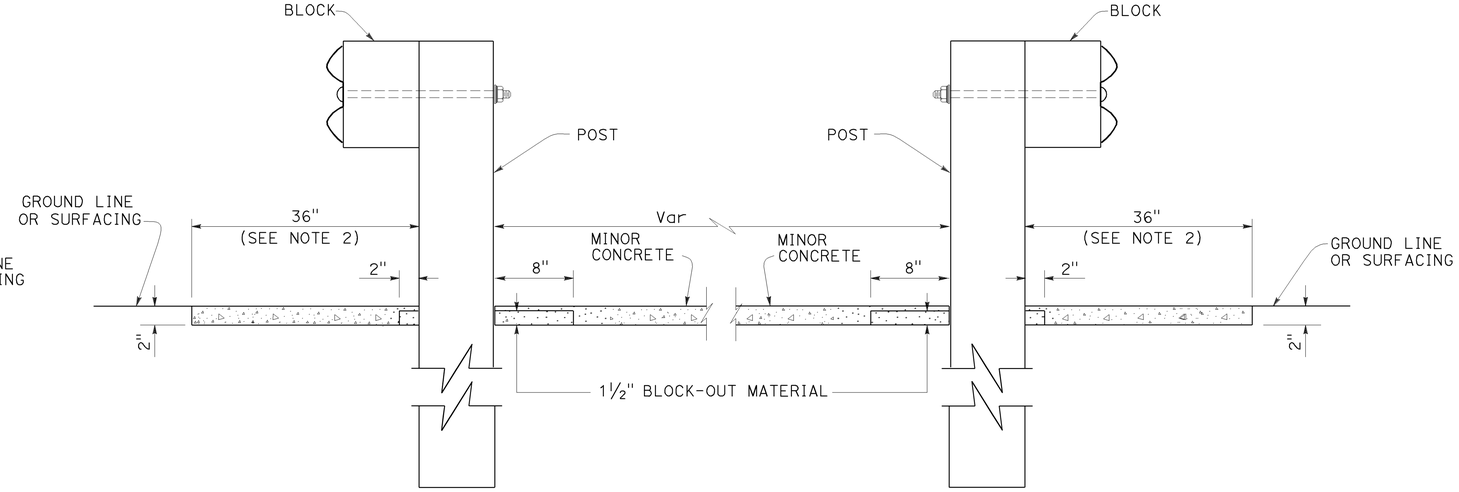

SECTION B-B

STATE OF CALIFORNIA
DEPARTMENT OF TRANSPORTATION

MIDWEST GUARDRAIL SYSTEM TYPICAL VEGETATION CONTROL AT FIXED OBJECT

NO SCALE

RSP A77N10 DATED JULY 19, 2013 SUPPLEMENTS THE STANDARD PLANS BOOK DATED 2010.

REVISED STANDARD PLAN RSP A77N10

2010 REVISED STANDARD PLAN RSP A77N10

6-12-13

Dist	COUNTY	ROUTE	POST MILES TOTAL PROJECT	SHEET No.	TOTAL SHEETS
04	Ala	880	2.9/27.3	864	906

Randell D. Hiatt
REGISTERED CIVIL ENGINEER

November 15, 2013
PLANS APPROVAL DATE

REGISTERED PROFESSIONAL ENGINEER
Randell D. Hiatt
No. C50200
Exp. 6-30-15
CIVIL
STATE OF CALIFORNIA

THE STATE OF CALIFORNIA OR ITS OFFICERS OR AGENTS SHALL NOT BE RESPONSIBLE FOR THE ACCURACY OR COMPLETENESS OF SCANNED COPIES OF THIS PLAN SHEET.

TO ACCOMPANY PLANS DATED 6-22-15

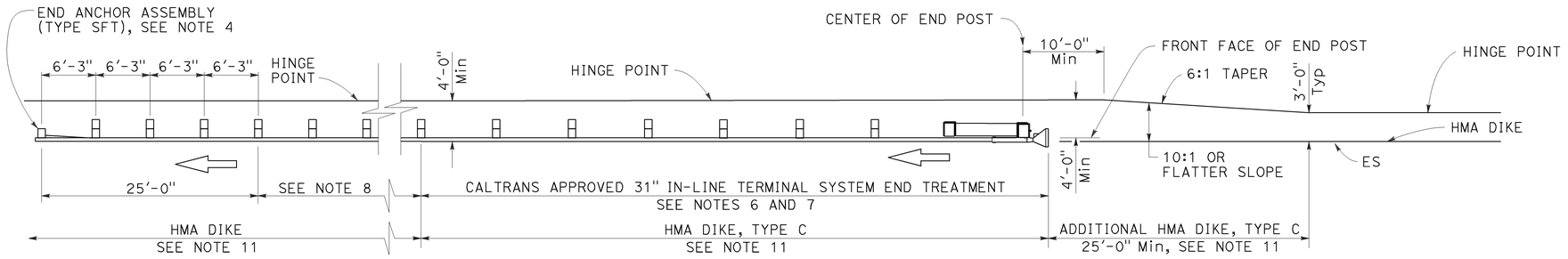

TYPE 11A LAYOUT

(Embankment MGS installation with 31" in-line end treatment at traffic approach end of railing) see Note 5

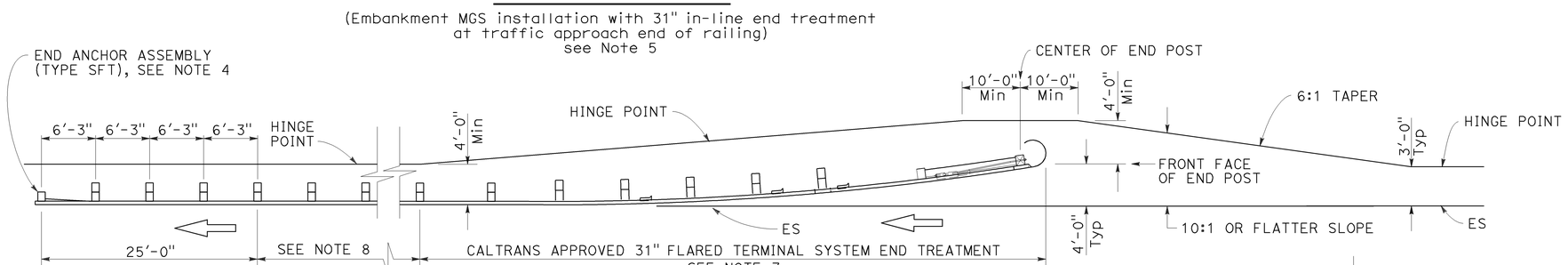

TYPE 11B LAYOUT

(Embankment MGS installation with 31" flared end treatment at traffic approach end of railing) see Note 5

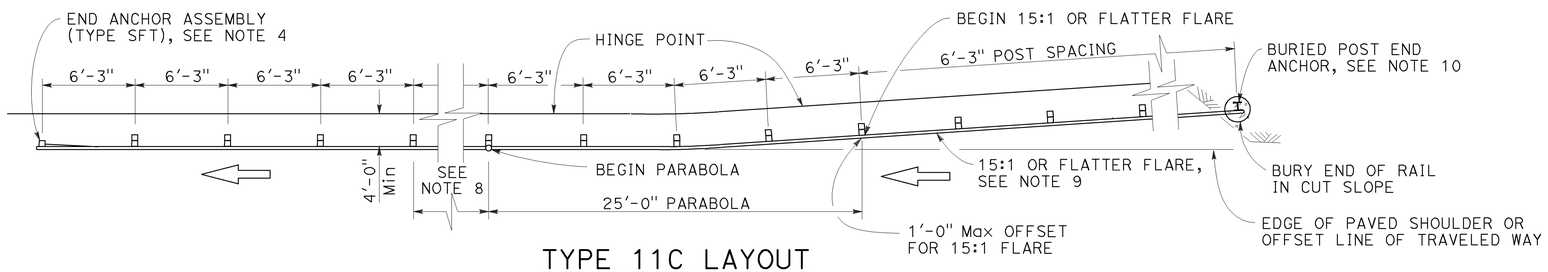

TYPE 11C LAYOUT

(Embankment MGS installation with buried end anchor treatment at traffic approach end of railing) see Notes 5 and 11

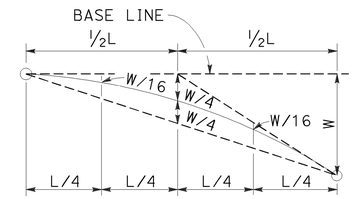

TYPICAL PARABOLIC LAYOUT

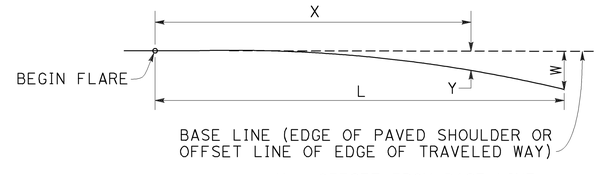

$$Y = \frac{WX^2}{L^2}$$

Y = OFFSET FROM BASE LINE
W = MAXIMUM OFFSET
X = DISTANCE ALONG BASE LINE
L = LENGTH OF FLARE

PARABOLIC FLARE OFFSETS

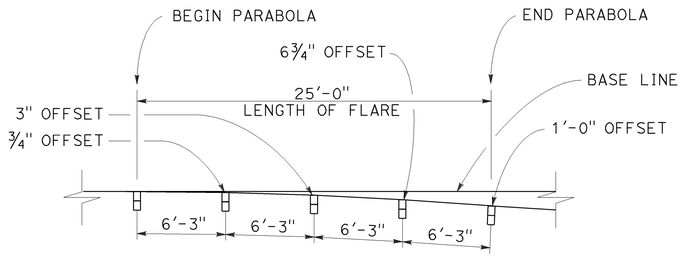

TYPICAL FLARE OFFSETS FOR 1 FOOT Max END OFFSET

NOTES:

1. Line post, blocks and hardware to be used are shown on Revised Standard Plans RSP A77L1, RSP A77L2, RSP A77M1, RSP A77N1 and RSP A77N2.
2. MGS post spacing to be 6'-3" center to center, except as otherwise noted.
3. Except as noted, line posts are 6" x 8" x 6'-0" wood with 6" x 12" x 1'-2" wood blocks. W6 x 8.5 or W6 x 9 steel posts, 6'-0" in length, with 6" x 12" x 1'-2" notched wood blocks or recycled plastic blocks may be used for 6" x 8" x 6'-0" wood post with 6" x 12" x 1'-2" wood blocks where applicable and when specified.
4. For End Anchor Assembly (Type SFT) details, see Revised Standard Plan RSP A77S1.
5. Layout Types 11A, 11B or 11C are typically used where MGS is recommended to shield embankment slopes and a crashworthy end treatment is required for only one direction of traffic.
6. 31" in-line terminal system end treatments are used where site conditions will not accommodate a flared end treatment.
7. The type of 31" terminal system end treatment to be used will be shown on the Project Plans.
8. Dependent on site conditions (embankment height and side slope), construction of additional MGS (length equal to multiples of 12'-6" with 6'-3" post spacing) may be advisable.
9. The 15:1 or flatter flare used with buried end anchors is based on the edge of the paved shoulder or offset line of edge of the traveled way. The length of MGS within the 15:1 or flatter flare is based on site conditions and should be a length equal to multiples of 12'-6".
10. For details of the buried post end anchor used with Type 11C Layout, see Revised Standard Plan RSP A77T2.
11. Where placement of dike is required with MGS installations, see Revised Standard Plan RSP A77N4 for dike positioning details.

STATE OF CALIFORNIA
DEPARTMENT OF TRANSPORTATION

MIDWEST GUARDRAIL SYSTEM TYPICAL LAYOUTS FOR EMBANKMENTS

NO SCALE

RSP A77P1 DATED NOVEMBER 15, 2013 SUPERSEDES RSP A77P1 DATED JULY 19, 2013 THAT SUPPLEMENTS THE STANDARD PLANS BOOK DATED 2010.

REVISED STANDARD PLAN RSP A77P1

2010 REVISED STANDARD PLAN RSP A77P1

10-4-13

Dist	COUNTY	ROUTE	POST MILES TOTAL PROJECT	SHEET No.	TOTAL SHEETS
04	Ala	880	2.9/27.3	865	906

Randell D. Hiatt
REGISTERED CIVIL ENGINEER

July 19, 2013
PLANS APPROVAL DATE

REGISTERED PROFESSIONAL ENGINEER
Randell D. Hiatt
No. C50200
Exp. 6-30-15
CIVIL
STATE OF CALIFORNIA

THE STATE OF CALIFORNIA OR ITS OFFICERS OR AGENTS SHALL NOT BE RESPONSIBLE FOR THE ACCURACY OR COMPLETENESS OF SCANNED COPIES OF THIS PLAN SHEET.

TO ACCOMPANY PLANS DATED 6-22-15

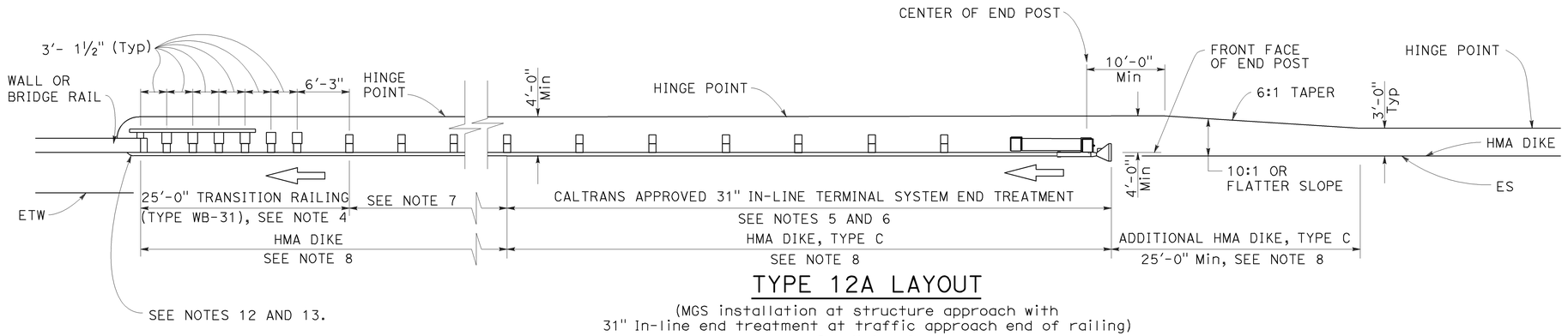

TYPE 12A LAYOUT

(MGS installation at structure approach with
31" In-line end treatment at traffic approach end of railing)
See Notes 9

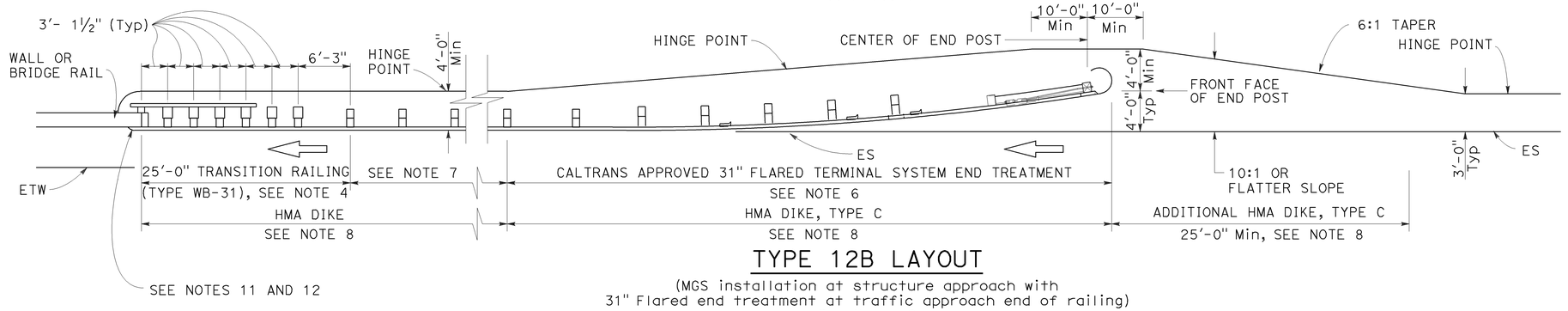

TYPE 12B LAYOUT

(MGS installation at structure approach with
31" Flared end treatment at traffic approach end of railing)
See Notes 9

NOTES:

1. Line post, blocks and hardware to be used are shown on Revised Standard Plans RSP A77L1, RSP A77L2, RSP A77M1, RSP A77N1 and RSP A77N2.
2. MGS post spacing to be 6'-3" center to center, except as otherwise noted.
3. Except as noted, line posts are 6" x 8" x 6'-0" wood with 6" x 12" x 1'-2" wood blocks. W6 x 8.5 or W6 x 9 steel posts, 6'-0" in length, with 6" x 12" x 1'-2" notched wood blocks or plastic blocks may be used for 6" x 8" x 6'-0" wood posts with 6" x 12" x 1'-2" wood blocks where applicable and when specified.
4. For Transition Railing (Type WB-31) details for Types 12A and 12B Layouts, see Revised Standard Plan RSP A77U4.
5. 31" in-line terminal system end treatments are used where site conditions will not accommodate a 31" flared end treatment.
6. The type 31" of terminal system end treatment to be used will be shown on the Project Plans.
7. Dependent on site conditions (embankment height, side slopes, or other fixed objects), it may be advisable to construct additional guard railing (a length equal to multiples of 12'-6" with 6'-3" post spacing) between the transition railing and end treatment. A 12.5 degree angle of departure can be drawn on the Project Plans from the edge of traveled way through the outer most point of the fixed object to determine the additional length of railing needed.
8. Where placement of dike is required with guard railing installations, see Revised Standard Plan RSP A77N4 for dike positioning details.
9. Type 12A or Type 12B Layouts are typically used:
   a. To the right of approaching traffic, at the end of a structure, on two-lane conventional highway where the roadbed width across the structure is less than 40 feet.
   b. To the left of approaching traffic, at the end of a structure, on two-lane conventional highway where the roadbed width across the structure is less than 40 feet.
   c. To the right of approaching traffic at the end of each structure on multilane freeways or expressways with separate adjacent or parallel bridges.
   d. To the right of approaching traffic at the end of the structure on multilane freeways or expressways with decked median on the bridge.
10. See Revised Standard Plan RSP A77Q3 for typical layout used left of approaching traffic at the ends of each structure on multilane freeways or expressways with separate adjacent or parallel bridges.
11. For additional details of typical connections to bridge rail, see Connection Detail AA on Revised Standard Plans RSP A77U1 and RSP A77U2 and Connection Detail FF on Revised Standard Plans RSP A77V1 and RSP A77V2.
12. For additional details of a typical connection to walls or abutments, see Revised Standard Plan RSP A77U3.

STATE OF CALIFORNIA
DEPARTMENT OF TRANSPORTATION

MIDWEST GUARDRAIL SYSTEM TYPICAL LAYOUTS FOR STRUCTURE APPROACH

NO SCALE

RSP A77Q1 DATED JULY 19, 2013 SUPPLEMENTS THE STANDARD PLANS BOOK DATED 2010.

REVISED STANDARD PLAN RSP A77Q1

2010 REVISED STANDARD PLAN RSP A77Q1

6-19-13

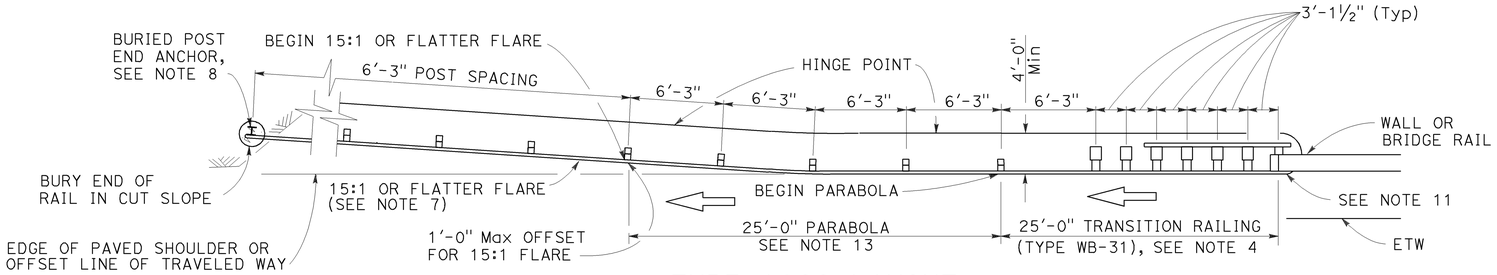

TYPE 12CC LAYOUT

(MGS installation at structure departure with a
Buried end anchor treatment at trailing end of railing)
See Notes 9 and 10

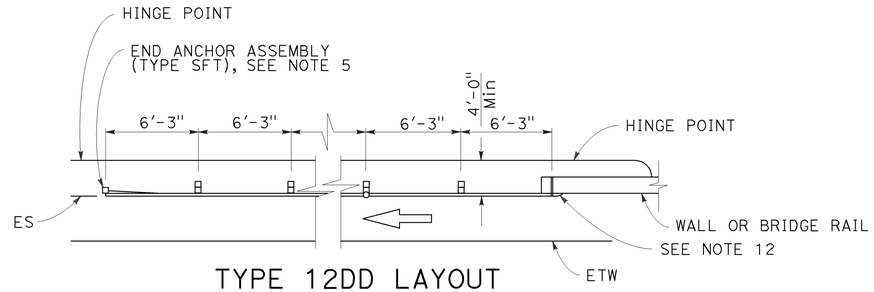

TYPE 12DD LAYOUT

(MGS installation at structure departure
With end anchor assembly at trailing end of railing)
See Notes 6 and 9

Dist	COUNTY	ROUTE	POST MILES TOTAL PROJECT	SHEET No.	TOTAL SHEETS
04	Ala	880	2.9/27.3	866	906

Randell D. Hiatt
REGISTERED CIVIL ENGINEER

July 19, 2013
PLANS APPROVAL DATE

REGISTERED PROFESSIONAL ENGINEER — Randell D. Hiatt — No. C50200 — Exp. 6-30-15 — CIVIL — STATE OF CALIFORNIA

THE STATE OF CALIFORNIA OR ITS OFFICERS OR AGENTS SHALL NOT BE RESPONSIBLE FOR THE ACCURACY OR COMPLETENESS OF SCANNED COPIES OF THIS PLAN SHEET.

TO ACCOMPANY PLANS DATED 6-22-15

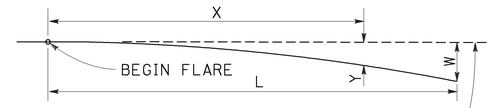

BASE LINE (EDGE OF PAVED SHOULDER OR OFFSET LINE OF EDGE OF TRAVELED WAY)

$$Y = \frac{WX^2}{L^2}$$

Y = OFFSET FROM BASE LINE
W = MAXIMUM OFFSET
X = DISTANCE ALONG BASE LINE
L = LENGTH OF FLARE

PARABOLIC FLARE OFFSETS

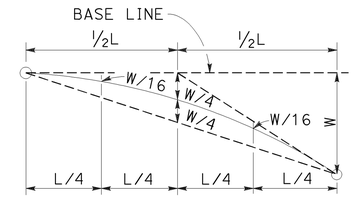

TYPICAL PARABOLIC LAYOUT

NOTES:

1. Line post, blocks and hardware to be used are shown on Revised Standard Plans RSP A77L1, RSP A77L2, RSP A77M1, RSP A77N1 and RSP A77N2.
2. MSG post spacing to be 6'-3" center to center, except as otherwise noted.
3. Except as noted, line posts are 6" x 8" x 6'-0" wood with 6" x 12" x 1'-2" wood blocks. W6 x 8.5 or W6 x 9 steel posts, 6'-0" in length, with 6" x 12" x 1'-2" notched wood blocks or notched recycled plastic blocks may be used for 6" x 8" x 6'-0" wood line posts with 6" x 12" x 1'-2" wood blocks where applicable and when specified.
4. For Transition Railing (Type WB-31) details for Type 12CC Layout, see Revised Standard Plan RSP A77U4.
5. For details of End Anchor Assembly (Type SFT) used with Type 12DD Layout, see Revised Standard Plan RSP A77S1.
6. Type 12DD layout is typically used to the right of traffic departing a structure on two-way conventional highways where the roadbed width across the structure is equal to or greater than 40 feet and MGS is recommended (embankment height, side slopes, other fixed objects). Length of railing to be equal to multiples of 12'-6". For MGS connection details to bridge rail, see Revised Standard Plans RSP A77U1 and RSP A77V1. For MGS connection details to wall, see Revised Standard Plan RSP A77U3.
7. The 15:1 or flatter flare for Type 12CC Layout is based on the edge of the paved shoulder or offset line of edge of the traveled way. The length of MGS within the 15:1 or flatter flare is based on site conditions and should be a length equal to multiples of 12'-6".
8. For details of the buried post end anchor used with Type 12CC Layout, see Revised Standard Plan RSP A77T2.
9. Where placement of dike is required with MGS installations, see Revised Standard Plan RSP A77N4 for dike positioning details.
10. Type 12CC Layout is typically used to the right of traffic departing a structure on two-way conventional highways where the roadbed width across the structure is less than 40 feet.
11. For additional details of a typical connection to bridge rail for Layout Type 12CC, see Connection Detail CC on Revised Standard Plan RSP A77U2 and Connection Detail HH on Revised Standard Plan RSP A77V2.
12. For additional details of a typical connection to bridge rail for Layout Type 12DD, see Connection Detail BB on Revised Standard Plan RSP A77U1 and Connection Detail GG on Revised Standard Plan RSP A77V1.
13. For typical flare offsets for 25'-0" length parabola with maximum offset of 1'-0", see Revised Standard Plan RSP A77P1.

STATE OF CALIFORNIA
DEPARTMENT OF TRANSPORTATION

MIDWEST GUARDRAIL SYSTEM TYPICAL LAYOUTS FOR STRUCTURE DEPARTURE

NO SCALE

RSP A77Q5 DATED JULY 19, 2013 SUPPLEMENTS THE STANDARD PLANS BOOK DATED 2010.

REVISED STANDARD PLAN RSP A77Q5

2010 REVISED STANDARD PLAN RSP A77Q5

6-20-13

Dist	COUNTY	ROUTE	POST MILES TOTAL PROJECT	SHEET No.	TOTAL SHEETS
04	Ala	880	2.9/27.3	867	906

Randell D. Hiatt
REGISTERED CIVIL ENGINEER

July 19, 2013
PLANS APPROVAL DATE

REGISTERED PROFESSIONAL ENGINEER — Randell D. Hiatt — No. C50200 — Exp. 6-30-15 — CIVIL — STATE OF CALIFORNIA

THE STATE OF CALIFORNIA OR ITS OFFICERS OR AGENTS SHALL NOT BE RESPONSIBLE FOR THE ACCURACY OR COMPLETENESS OF SCANNED COPIES OF THIS PLAN SHEET.

TO ACCOMPANY PLANS DATED 6-22-15

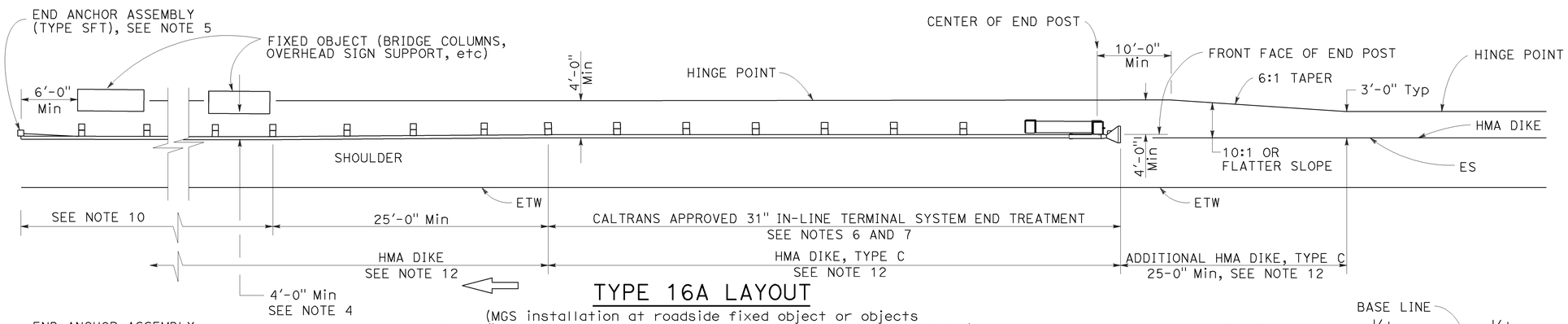

TYPE 16A LAYOUT

(MGS installation at roadside fixed object or objects with 31" in-line end treatment at traffic approach end of railing)
See Notes 11 and 12

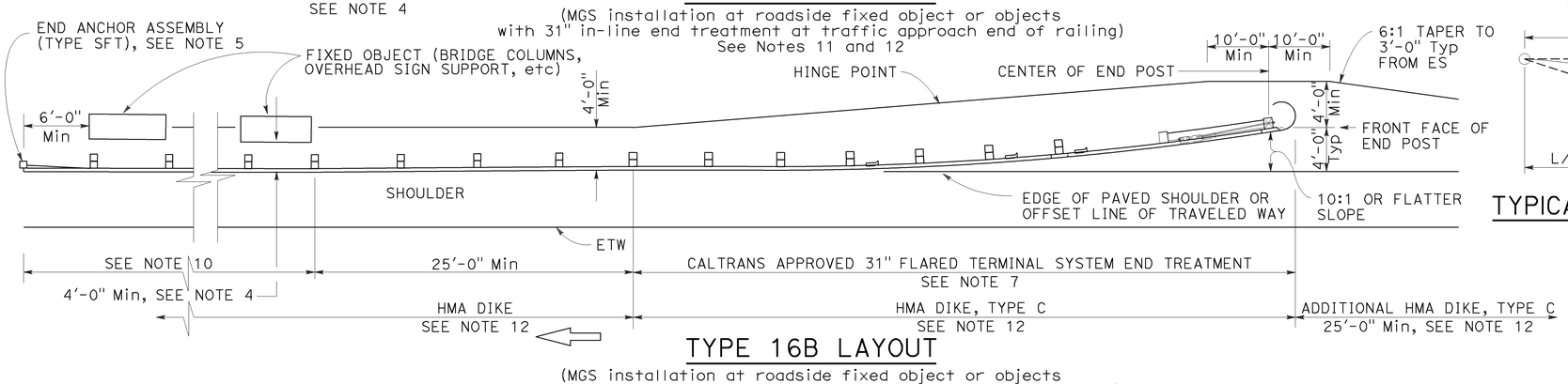

TYPE 16B LAYOUT

(MGS installation at roadside fixed object or objects with 31' flared end treatment at traffic approach end of railing)
See Notes 11 and 12

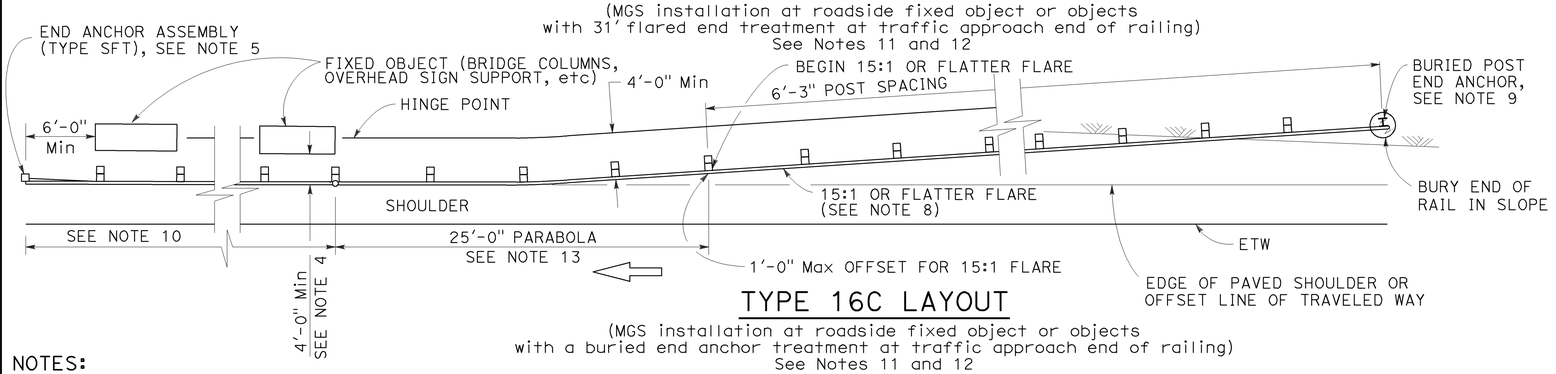

TYPE 16C LAYOUT

(MGS installation at roadside fixed object or objects with a buried end anchor treatment at traffic approach end of railing)
See Notes 11 and 12

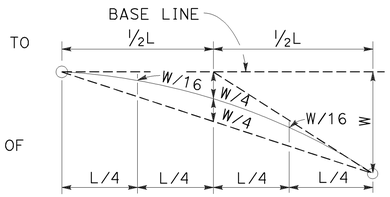

TYPICAL PARABOLIC LAYOUT

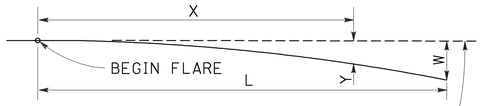

BASE LINE (EDGE OF PAVED SHOULDER OR OFFSET LINE OF EDGE OF TRAVELED WAY)

$$Y = \frac{WX^2}{L^2}$$

Y = OFFSET FROM BASE LINE
W = MAXIMUM OFFSET
X = DISTANCE ALONG BASE LINE
L = LENGTH OF FLARE

PARABOLIC FLARE OFFSETS

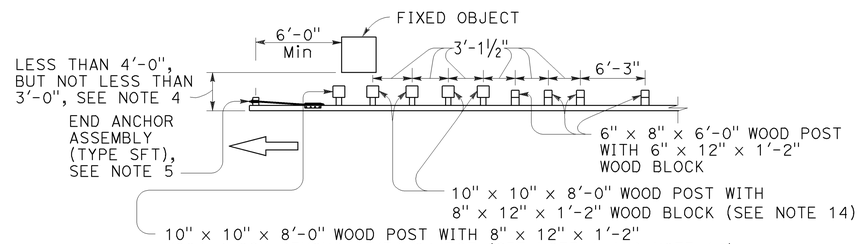

NOTE A: For a series of fixed objects (bridge columns, overhead sign supports, etc.) additional 10" x 10" x 8'-0" wood post with 8" x 12" x 1'-2" wood blocks at 3'-1½" center to center spacing are to be used between fixed objects.

STRENGTHENED MIDWEST GUARDRAIL SYSTEM SECTIONS FOR FIXED OBJECT

Use strengthened MGS sections with Types 16A, 16B or 16C layouts where minimum clearance between the face of the railing and fixed object(s) is less than 4'-0", but not less than 3'-0". See Note 4

NOTES:

1. Line post, blocks and hardware to be used are shown on Revised Standard Plans RSP A77L1, RSP A77L2, RSP A77M1, RSP A77N1 and RSP A77N2.
2. MGS post spacing to be 6'-3" center to center, except as otherwise noted.
3. Except as noted, line posts are 6" x 8" x 6'-0" wood with 6" x 12" x 1'-2" wood blocks. W6 x 8.5 or W6 x 9 steel posts, 6'-0" in length, with 6" x 12" x 1'-2" notched wood blocks or notched recycled plastic blocks may be used for 6" x 8" x 6'-0" wood line posts with 6" x 12" x 1'-2" wood blocks where applicable and when specified.
4. A 4'-0" minimum clearance is required between the face of the railing and the face of a fixed object located directly behind MGS sections with post spacing of 6'-3". Construct MGS as shown in the detail "Strengthened Midwest Guardrail System Sections for Fixed Object" on this plan, where the clearance between the face of the railing and the face of a fixed object is less than 4'-0", but not less than 3'-0". Where the clearance is less than 3'-0", a concrete wall or barrier should be constructed to shield the fixed object(s).
5. For End Anchor Assembly (Type SFT) details, see Revised Standard Plan RSP A77S1.
6. 31" in-line terminal system end treatments are used where site conditions will not accommodate a 31" flared end treatment.
7. The type of 31" terminal system to be used will be shown on the Project Plans.
8. The 15:1 or flatter flare used with Type 16C Layout is based on the edge of the paved shoulder or offset line of edge of the traveled way. The length of MGS within the 15:1 or flatter flare is based on site conditions and should be a length equal to multiples of 12'-6".
9. For details of the Buried Post End Anchor used with Type 16C Layout, see Revised Standard Plan RSP A77T2.
10. As site conditions dictate, construct additional MGS to shield fixed object(s). Additional MGS length equal to multiples of 12'-6". Post spacing at 6'-3" except as specified in Note 4.
11. Layout Types 16A, 16B or 16C are typically used where MGS is recommended to shield roadside fixed object(s) and a crashworthy 31" end treatment is required for only one direction of traffic.
12. Where placement of dike is required with MGS, see Revised Standard Plan RSP A77N4 for dike positioning details.
13. For typical flare offsets for 25'-0" length parabola with maximum offset of 1'-0", see Revised Standard Plan RSP A77P1.
14. W6 x 15 steel post, 8'-0" in length, with 8" x 12" x 1'-2" notched wood block or notched recycled plastic blocks may be used in place of the 10" x 10" x 8'-0" wood post with 8" x 12" x 1'-2" wood block shown in the detail "Strengthened Midwest Guardrail System Sections for Fixed Object".

STATE OF CALIFORNIA
DEPARTMENT OF TRANSPORTATION

MIDWEST GUARDRAIL SYSTEM TYPICAL LAYOUTS FOR ROADSIDE FIXED OBJECTS

NO SCALE

RSP A77R3 DATED JULY 19, 2013 SUPPLEMENTS THE STANDARD PLANS BOOK DATED 2010.

REVISED STANDARD PLAN RSP A77R3

2010 REVISED STANDARD PLAN RSP A77R3

6-20-13

Dist	COUNTY	ROUTE	POST MILES TOTAL PROJECT	SHEET No.	TOTAL SHEETS
04	Ala	880	2.9/27.3	868	906

Randell D. Hiatt
REGISTERED CIVIL ENGINEER

November 15, 2013
PLANS APPROVAL DATE

REGISTERED PROFESSIONAL ENGINEER
Randell D. Hiatt
No. C50200
Exp. 6-30-15
CIVIL
STATE OF CALIFORNIA

THE STATE OF CALIFORNIA OR ITS OFFICERS OR AGENTS SHALL NOT BE RESPONSIBLE FOR THE ACCURACY OR COMPLETENESS OF SCANNED COPIES OF THIS PLAN SHEET.

TO ACCOMPANY PLANS DATED 6-22-15

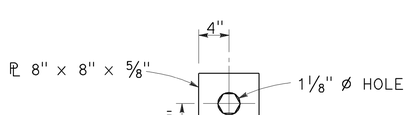

DETAIL "A"
CABLE CONNECTION
END PLATE

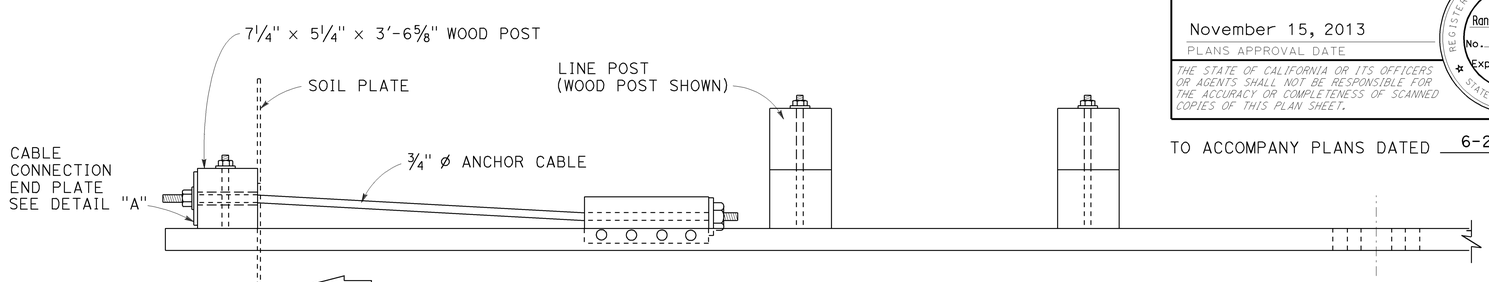

PLAN

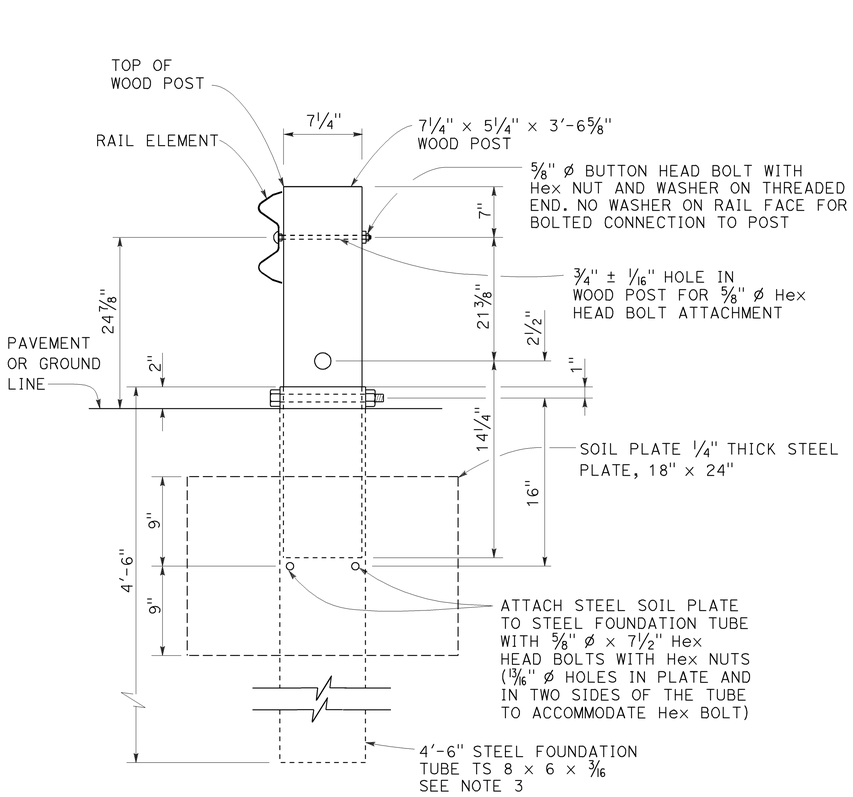

SECTION A-A

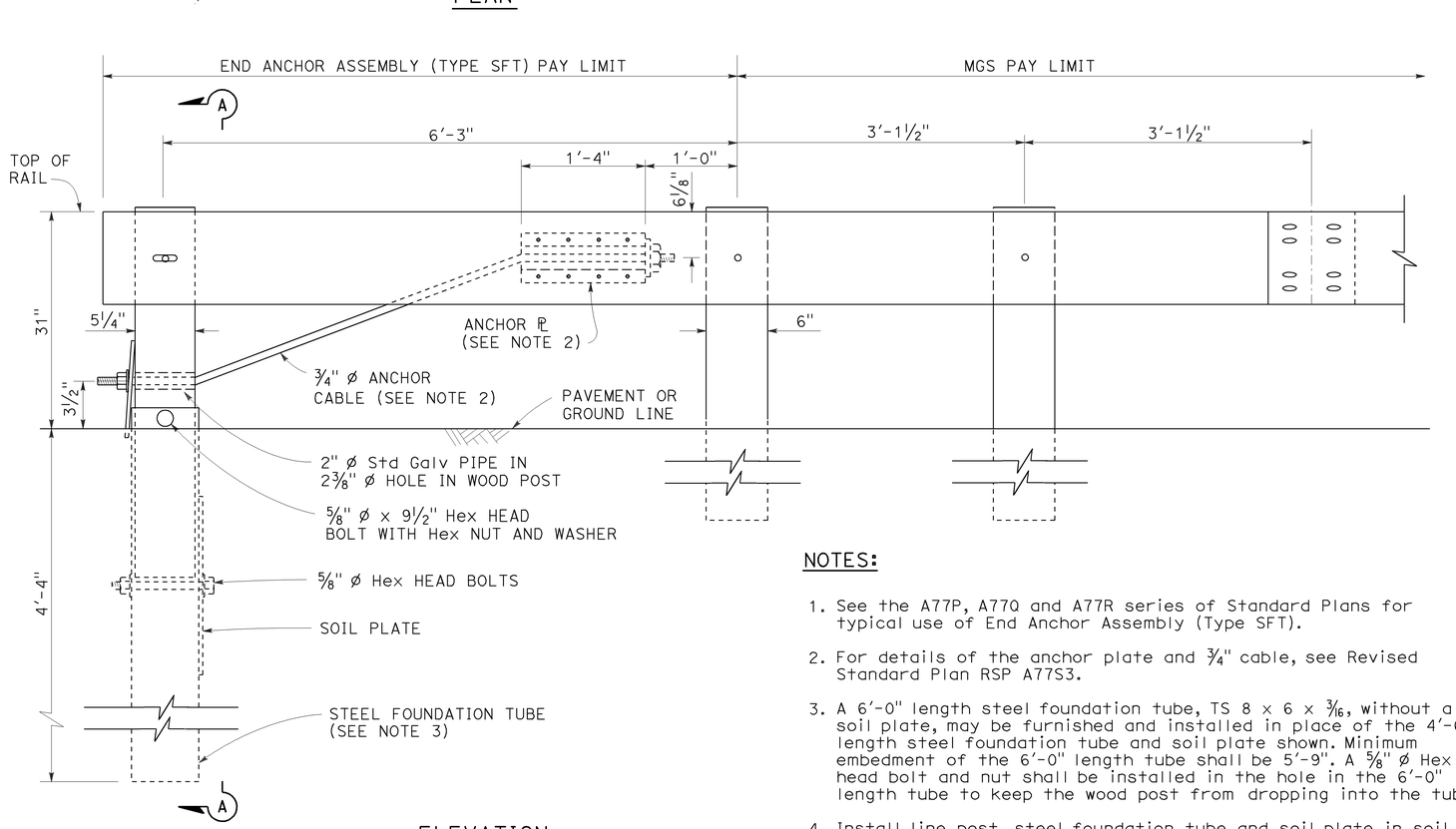

ELEVATION

END ANCHOR
ASSEMBLY (TYPE SFT)
See Note 1

NOTES:

1. See the A77P, A77Q and A77R series of Standard Plans for typical use of End Anchor Assembly (Type SFT).
2. For details of the anchor plate and 3/4" cable, see Revised Standard Plan RSP A77S3.
3. A 6'-0" length steel foundation tube, TS 8 x 6 x 3/16, without a soil plate, may be furnished and installed in place of the 4'-6" length steel foundation tube and soil plate shown. Minimum embedment of the 6'-0" length tube shall be 5'-9". A 5/8" ø Hex head bolt and nut shall be installed in the hole in the 6'-0" length tube to keep the wood post from dropping into the tube.
4. Install line post, steel foundation tube and soil plate in soil.

STATE OF CALIFORNIA
DEPARTMENT OF TRANSPORTATION

MIDWEST GUARDRAIL SYSTEM
END ANCHOR ASSEMBLY
(TYPE SFT)

NO SCALE

RSP A77S1 DATED NOVEMBER 15, 2013 SUPERSEDES RSP A77S1 DATED JULY 19, 2013 THAT SUPPLEMENTS THE STANDARD PLANS BOOK DATED 2010.

REVISED STANDARD PLAN RSP A77S1

2010 REVISED STANDARD PLAN RSP A77S1

10-4-13

Dist	COUNTY	ROUTE	POST MILES TOTAL PROJECT	SHEET No.	TOTAL SHEETS
04	Ala	880	2.9/27.3	869	906

Randell D. Hiatt
REGISTERED CIVIL ENGINEER

November 15, 2013
PLANS APPROVAL DATE

REGISTERED PROFESSIONAL ENGINEER
Randell D. Hiatt
No. C50200
Exp. 6-30-15
CIVIL
STATE OF CALIFORNIA

THE STATE OF CALIFORNIA OR ITS OFFICERS OR AGENTS SHALL NOT BE RESPONSIBLE FOR THE ACCURACY OR COMPLETENESS OF SCANNED COPIES OF THIS PLAN SHEET.

TO ACCOMPANY PLANS DATED 6-22-15

NOTE:

See Revised Standard Plans RSP A77S1, RSP A77S2 and RSP A77T1 for typical use of anchor cable and anchor plate.

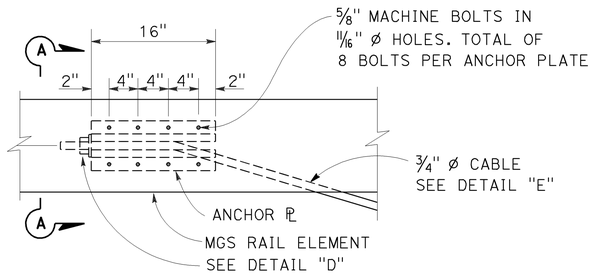

ANCHOR PLATE DETAIL

(MGS shown, TBB similar)

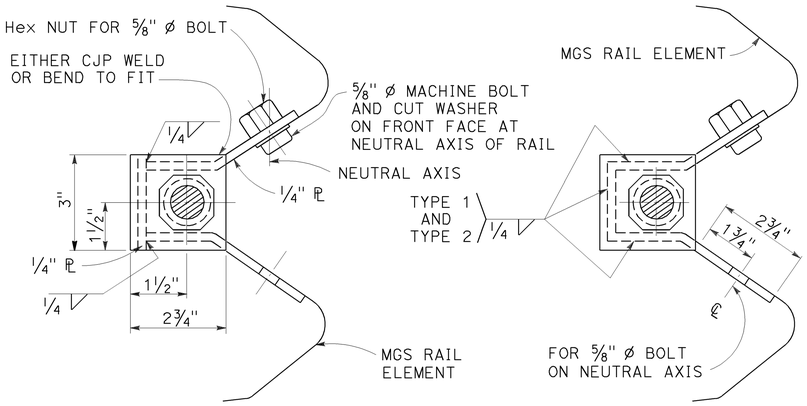

NOTE:

Dimensioning applies to both types.

SECTION A-A
(ALTERNATIVE TYPE 1)

SECTION A-A
(ALTERNATIVE TYPE 2)

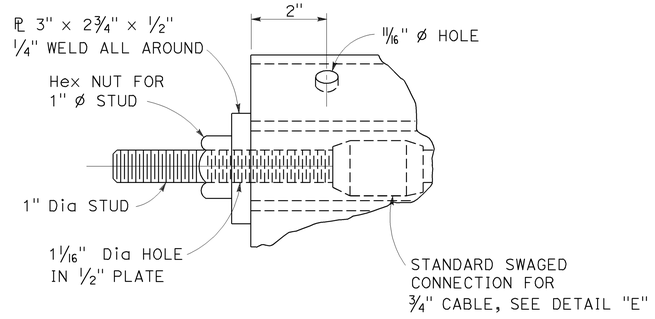

DETAIL "D"

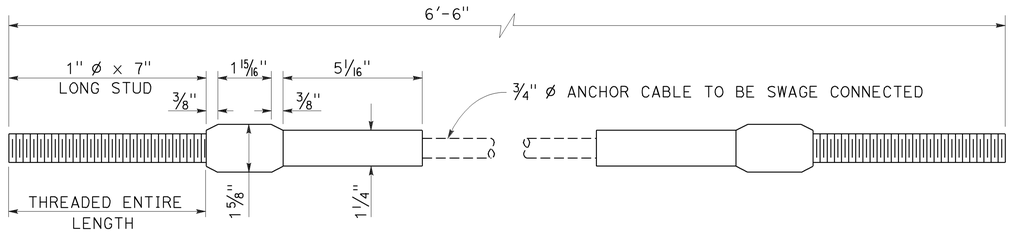

ANCHOR CABLE WITH SWAGED FITTING AND STUD
DETAIL "E"

STATE OF CALIFORNIA
DEPARTMENT OF TRANSPORTATION

METAL RAILING ANCHOR CABLE AND ANCHOR PLATE DETAILS

NO SCALE

RSP A77S3 DATED NOVEMBER 15, 2013 SUPERSEDES RSP A77S3
DATED JULY 19, 2013 THAT SUPPLEMENTS THE STANDARD PLANS BOOK DATED 2010.

REVISED STANDARD PLAN RSP A77S3

2010 REVISED STANDARD PLAN RSP A77S3

10-4-13

Dist	COUNTY	ROUTE	POST MILES TOTAL PROJECT	SHEET No.	TOTAL SHEETS
04	Ala	880	2.9/27.3	870	906

Randell D. Hiatt
REGISTERED CIVIL ENGINEER

July 19, 2013
PLANS APPROVAL DATE

REGISTERED PROFESSIONAL ENGINEER
Randell D. Hiatt
No. C50200
Exp. 6-30-15
CIVIL
STATE OF CALIFORNIA

THE STATE OF CALIFORNIA OR ITS OFFICERS OR AGENTS SHALL NOT BE RESPONSIBLE FOR THE ACCURACY OR COMPLETENESS OF SCANNED COPIES OF THIS PLAN SHEET.

TO ACCOMPANY PLANS DATED 6-22-15

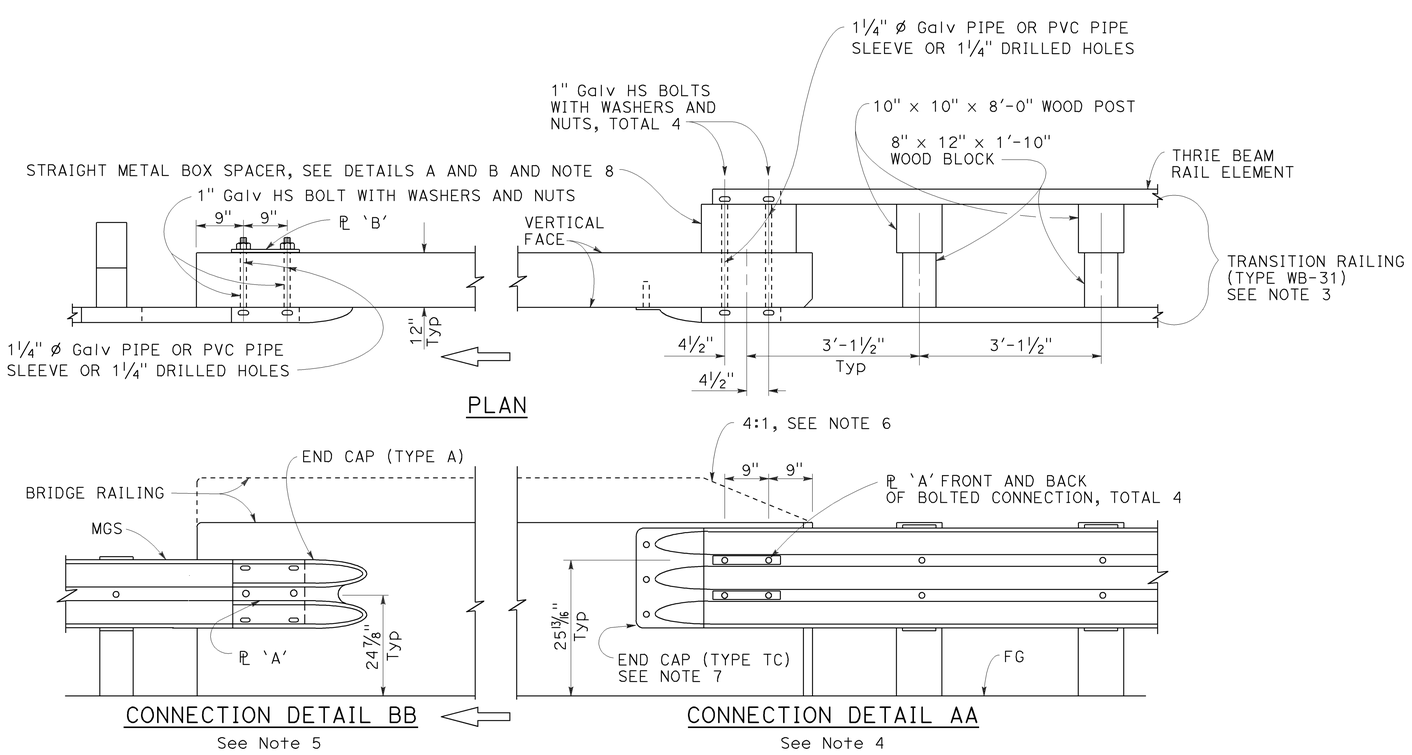

MIDWEST GUARDRAIL SYSTEM CONNECTION TO BRIDGE RAILING WITHOUT SIDEWALK

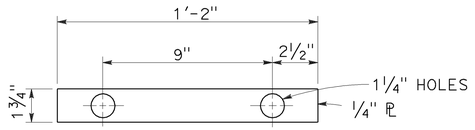

PLATE 'A'

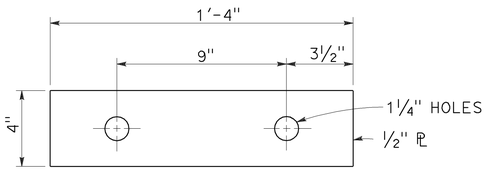

PLATE 'B'
(For backside of connection BB)

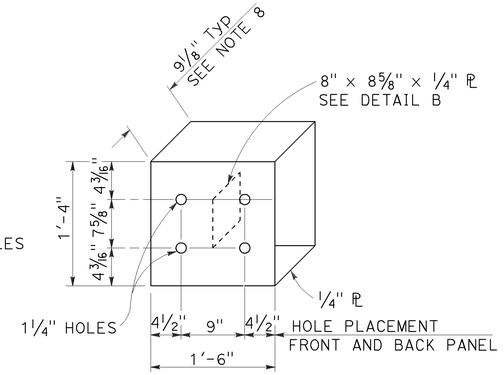

DETAIL A

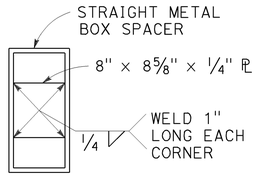

DETAIL B

STRAIGHT METAL BOX SPACER

NOTES:

1. See Revised Standard Plan RSP A77U2 for additional connection details to bridges without sidewalks.
2. Additional details of posts, blocks and hardware are shown on Revised Standard Plans RSP A77M1, RSP A77N1 and RSP A77N2.
3. For additional details of Transition Railing (Type WB-31), see Revised Standard Plan RSP A77U4. Transition Railing (Type WB-31) transitions the 12 gauge MGS railing section to a heavier gage nested thrie beam railing section which is connected to the concrete bridge railing.
4. For typical use of Connection Detail AA, see Layout Types 12A and 12B on Revised Standard Plan RSP A77Q1, Layout Types 12C and 12D on Revised Standard Plan RSP A77Q2, and Layout Type 12E on Revised Standard Plan RSP A77Q3.
5. For typical use of Connection Detail BB, see Layout Type 12D (structure departure railing connection) on Revised Standard Plan RSP A77Q2 and Layout Type 12DD on Revised Standard Plan RSP A77Q5.
6. Where the height of the bridge railing exceeds the height of the thrie beam railing by more than 1" at Connection Detail AA, taper the top of the end of the bridge railing at 4:1 to match the top elevation of the thrie beam rail.
7. For details of End Cap (Type TC), see Revised Standard Plan RSP A77U4.
8. See Revised Standard Plan RSP A77U4 for additional details regarding depth dimension for straight metal box spacer.

STATE OF CALIFORNIA
DEPARTMENT OF TRANSPORTATION

MIDWEST GUARDRAIL SYSTEM CONNECTIONS TO BRIDGE RAILINGS WITHOUT SIDEWALKS DETAILS No. 1

NO SCALE

RSP A77U1 DATED JULY 19, 2013 SUPPLEMENTS THE STANDARD PLANS BOOK DATED 2010.

REVISED STANDARD PLAN RSP A77U1

2010 REVISED STANDARD PLAN RSP A77U1

7-8-13

Dist	COUNTY	ROUTE	POST MILES TOTAL PROJECT	SHEET No.	TOTAL SHEETS
04	Ala	880	2.9/27.3	871	906

Randell D. Hiatt
REGISTERED CIVIL ENGINEER

July 19, 2013
PLANS APPROVAL DATE

REGISTERED PROFESSIONAL ENGINEER — Randell D. Hiatt — No. C50200 — Exp. 6-30-15 — CIVIL — STATE OF CALIFORNIA

THE STATE OF CALIFORNIA OR ITS OFFICERS OR AGENTS SHALL NOT BE RESPONSIBLE FOR THE ACCURACY OR COMPLETENESS OF SCANNED COPIES OF THIS PLAN SHEET.

TO ACCOMPANY PLANS DATED 6-22-15

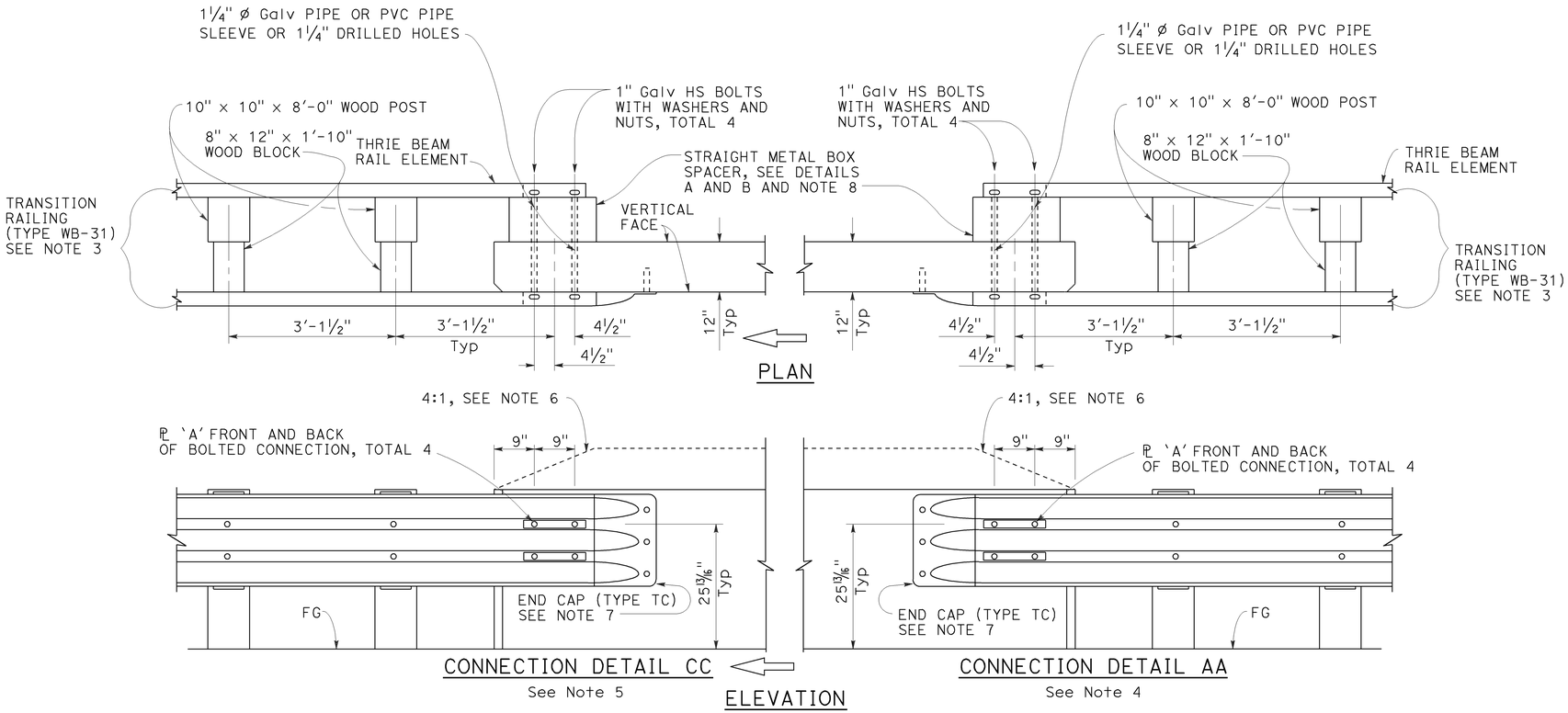

MIDWEST GUARDRAIL SYSTEM CONNECTION TO BRIDGE RAILING WITHOUT SIDEWALK

NOTES:

1. See Revised Standard Plan RSP A77U1 for additional connection details to bridges without sidewalks.
2. Additional details of posts, blocks and hardware are shown on Revised Standard Plans RSP A77M1, RSP A77N1 and RSP A77N2.
3. For additional details of Transition Railing (Type WB-31), see Revised Standard Plan RSP A77U4. Transition Railing (Type WB-31) transitions the 12 gauge MGS railing section to a heavier gage nested thrie beam railing section which is connected to the concrete bridge railing.
4. For typical use of Connection Detail AA, see Layout Types 12A and 12B on Revised Standard Plan RSP A77Q1, Layout Types 12C and 12D on Revised Standard Plan RSP A77Q2, and Layout Type 12E on Revised Standard Plan RSP A77Q3.
5. For typical use of Connection Detail CC, see Layout Types 12AA and 12BB on Revised Standard Plan RSP A77Q4 and Layout Type 12CC on Revised Standard Plan RSP A77Q5.
6. Where the height of the bridge railing exceeds the height of the thrie beam railing by more than 1" at Connection Detail AA and connection Detail CC, taper the top of the end of the bridge railing at 4:1 to match the top elevation of the thrie beam railing.
7. For details of End Cap (Type TC), see Revised Standard Plan RSP A77U4.
8. See Revised Standard Plan RSP A77U4 for additional details regarding depth dimension for straight metal box spacer.

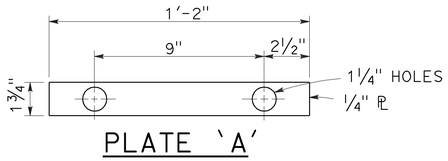

PLATE 'A'

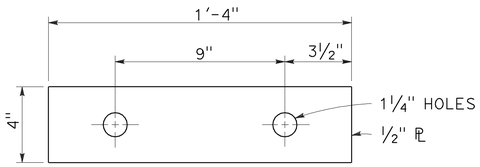

PLATE 'B'
(For backside of connection BB)

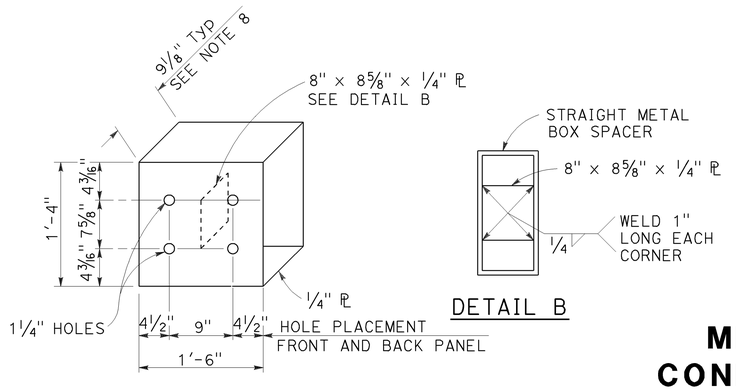

DETAIL A

DETAIL B

STRAIGHT METAL BOX SPACER

STATE OF CALIFORNIA
DEPARTMENT OF TRANSPORTATION

MIDWEST GUARDRAIL SYSTEM CONNECTIONS TO BRIDGE RAILINGS WITHOUT SIDEWALKS DETAILS No. 2

NO SCALE

RSP A77U2 DATED JULY 19, 2013 SUPPLEMENTS THE STANDARD PLANS BOOK DATED 2010.

REVISED STANDARD PLAN RSP A77U2

2010 REVISED STANDARD PLAN RSP A77U2

6-20-13

Dist	COUNTY	ROUTE	POST MILES TOTAL PROJECT	SHEET No.	TOTAL SHEETS
04	Ala	880	2.9/27.3	872	906

Randell D. Hiatt
REGISTERED CIVIL ENGINEER

January 23, 2015
PLANS APPROVAL DATE

REGISTERED PROFESSIONAL ENGINEER — Randell D. Hiatt — No. C50200 — Exp. 6-30-15 — CIVIL — STATE OF CALIFORNIA

THE STATE OF CALIFORNIA OR ITS OFFICERS OR AGENTS SHALL NOT BE RESPONSIBLE FOR THE ACCURACY OR COMPLETENESS OF SCANNED COPIES OF THIS PLAN SHEET.

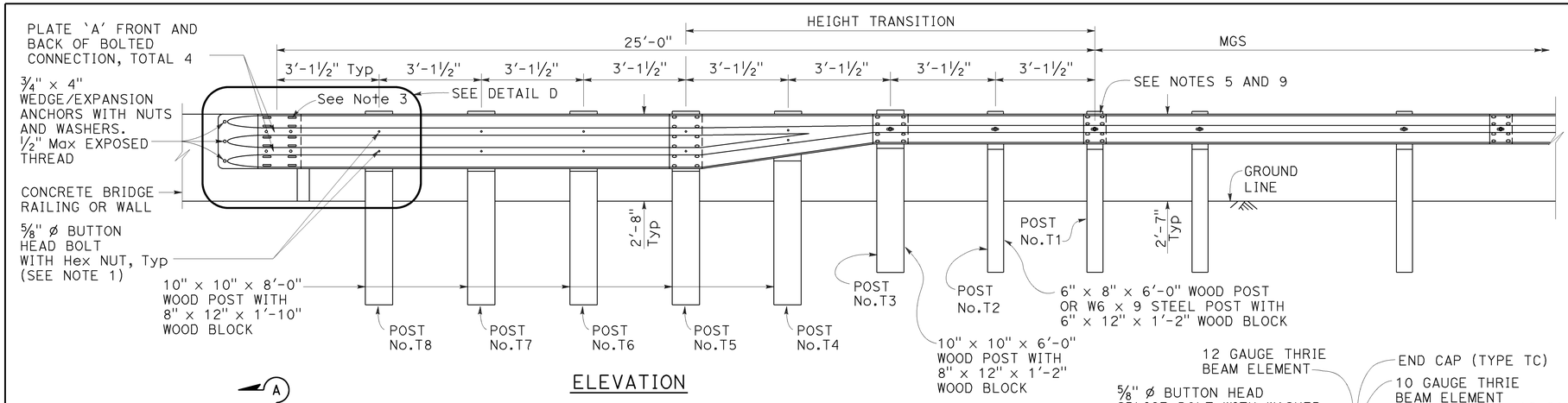

ELEVATION

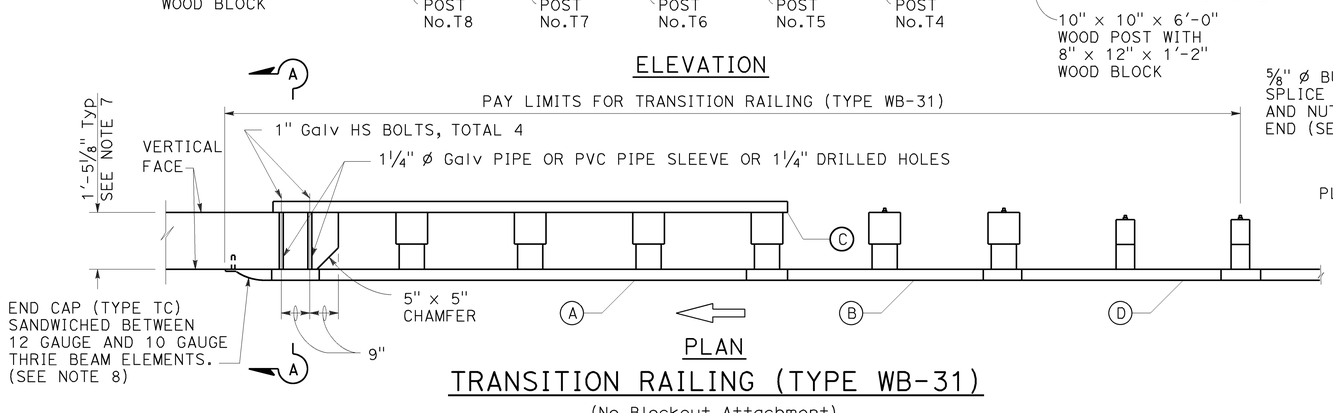

PLAN

TRANSITION RAILING (TYPE WB-31)

(No Blockout Attachment)

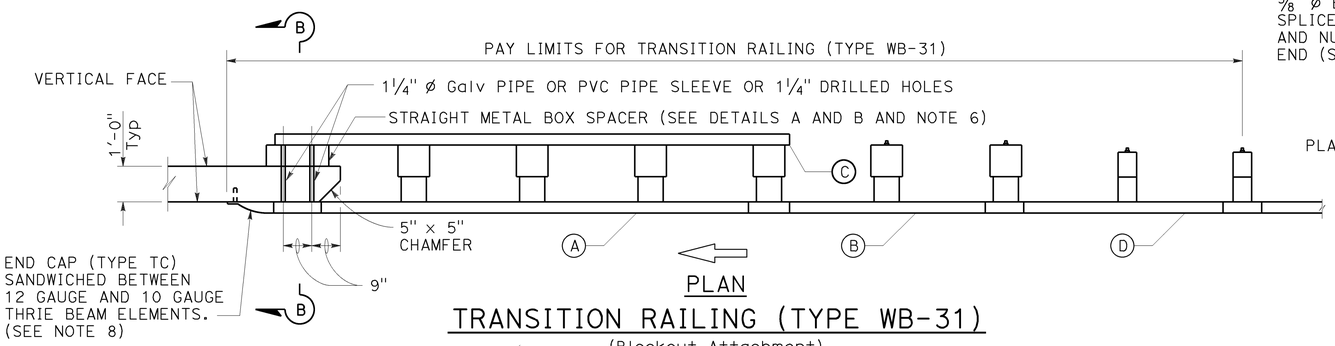

PLAN

TRANSITION RAILING (TYPE WB-31)

(Blockout Attachment)

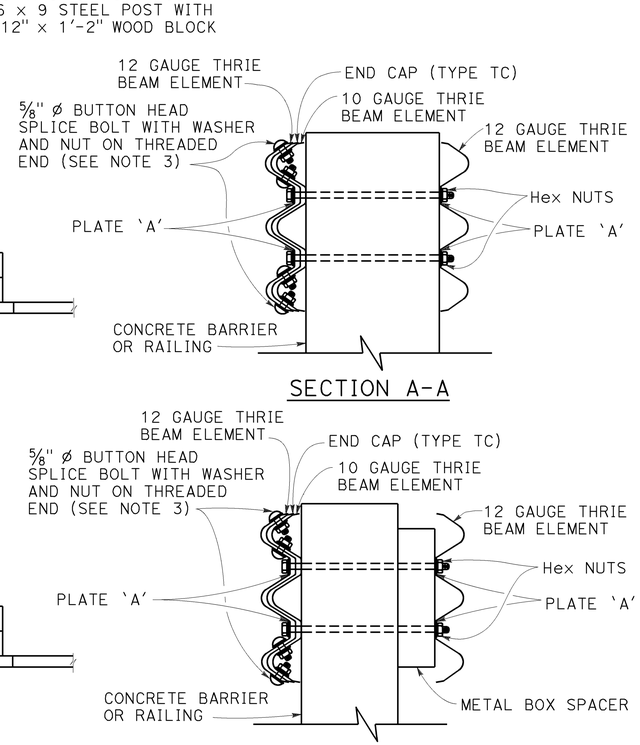

SECTION A-A

SECTION B-B

NOTES: TO ACCOMPANY PLANS DATED 6-22-15

1. Use ⅝" ø Button head bolts and hex nuts for connections to posts. No washer on rail face for bolted connections to post.
2. The nested rail elements, end cap, and 'W' beam to thrie beam element may be spliced together prior to bolting the elements to the wood post and concrete barrier or railing.
3. Exterior splice bolt holes for rail element splices at Post No. T5 and the connection to the concrete barrier or railing shall be the standard 29/32" x 1⅛" slot size. Interior splice bolt holes at these locations may be increased up to 1¼" ø. Only the top 4 and the bottom 4 splice bolts with washers and nuts are required for rail splices at Post No. T5 and the connection to the concrete barrier or railing.
4. The top elevation of Posts No. T2 through No. T7 shall not project more than 1" above the top elevation of the rail element.
5. Typically, the railing connected to Transition Railing (Type WB-31) will be either standard railing section of MGS with height transition ratio of 150:1 or a Caltrans approved 31" end treatment attached to Post No. T1.
6. The depth of the metal box spacer varies from the 9⅛" to 1½" and is dependent on the width of the concrete railing or wall. The combined dimension for the depth of the metal box spacer plus the width of railing or wall is typically 21⅛". Where the space between the backside of the concrete railing or wall and the rear thrie beam element is less than 1½", metal plates similar to Plate 'A' are to be used as spacers.
7. Where the width of the concrete railing or wall is greater than 17⅛", wood blocks are to be used to fill the space created between the backside of Posts No. T5 through No. T8 and the rear thrie beam element. These wood blocks shall be 8" in width and 1'-2" in length. The dimension between the front thrie beam element and the rear thrie beam element is to match the width of the concrete railing or wall.
8. End cap may be installed over 12 gauge and 10 gauge thrie beam elements where transition railing is installed on the departure end of bridge railing.
9. Conform standard railing section height to 31" at Post No. T1 using height transition ratio of 150:1.

LEGEND:

- (A) NESTED THRIE BEAM ELEMENTS (ONE 12 GAUGE ELEMENT NESTED OVER ONE 10 GAUGE ELEMENT).
- (B) ONE ASYMMETRICAL 10 GAUGE "W" BEAM TO THRIE BEAM ELEMENT.
- (C) ONE 12 GAUGE THRIE BEAM ELEMENT.
- (D) ONE 10 GAUGE "W" BEAM RAIL ELEMENT (7'-3½"LENGTH)

10 GAUGE = 0.138" THICK
12 GAUGE = 0.108" THICK

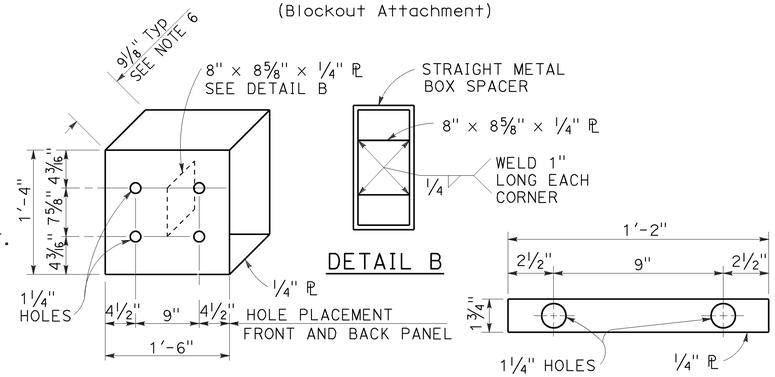

DETAIL A

DETAIL B

DETAIL C

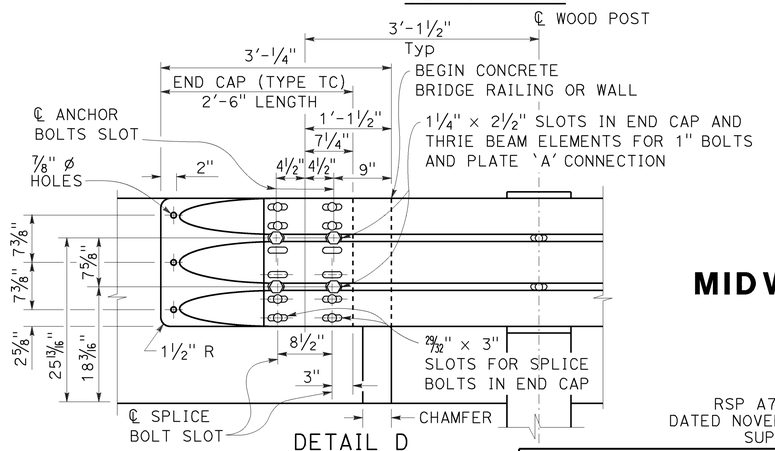

DETAIL D

STRAIGHT METAL BOX SPACER

PLATE 'A'

STATE OF CALIFORNIA
DEPARTMENT OF TRANSPORTATION

MIDWEST GUARDRAIL SYSTEM TRANSITION RAILING (TYPE WB-31)

NO SCALE

RSP A77U4 DATED JANUARY 23, 2015 SUPERSEDES RSP A77U4 DATED NOVEMBER 15, 2013 AND RSP A77U4 DATED JULY 19, 2013 THAT SUPPLEMENTS THE STANDARD PLANS BOOK DATED 2010.

REVISED STANDARD PLAN RSP A77U4

2010 REVISED STANDARD PLAN RSP A77U4

1-8-15

Dist	COUNTY	ROUTE	POST MILES TOTAL PROJECT	SHEET No.	TOTAL SHEETS
04	Ala	880	2.9/27.3	873	906

REGISTERED CIVIL ENGINEER

July 19, 2013
PLANS APPROVAL DATE

REGISTERED PROFESSIONAL ENGINEER
Michael Janzen
No. 44788
Exp. 03-31-14
CIVIL
STATE OF CALIFORNIA

THE STATE OF CALIFORNIA OR ITS OFFICERS OR AGENTS SHALL NOT BE RESPONSIBLE FOR THE ACCURACY OR COMPLETENESS OF SCANNED COPIES OF THIS PLAN SHEET.

TO ACCOMPANY PLANS DATED 6-22-15

2010 REVISED STANDARD PLAN RSP A87B

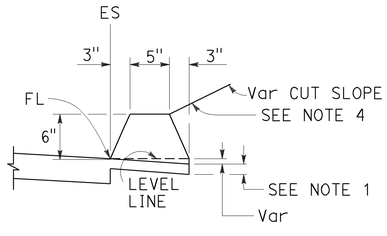

TYPE A
See Note 3

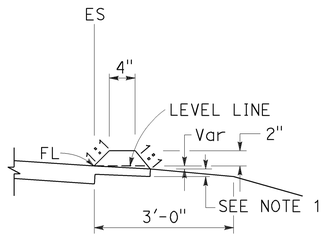

TYPE C

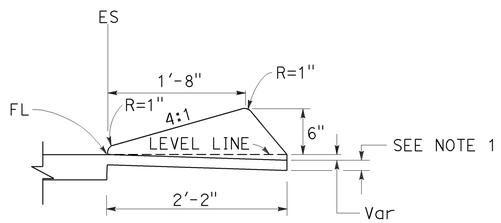

TYPE D

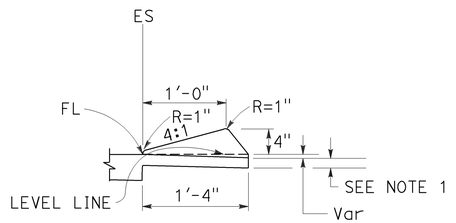

TYPE E

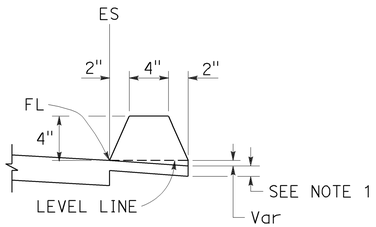

TYPE F
See Note 5

DIKES

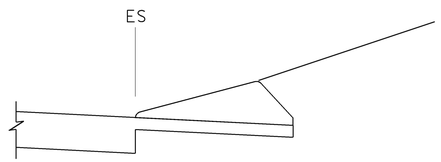

CASE C-1
Cut Slope

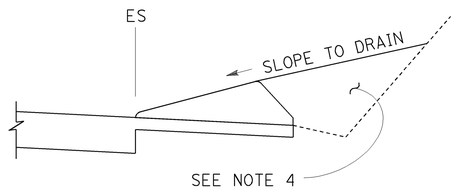

CASE C-2
Cut Slope

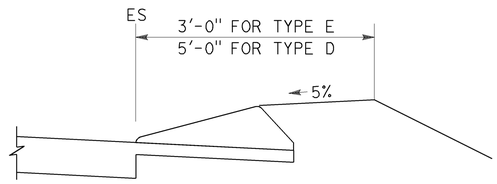

CASE F

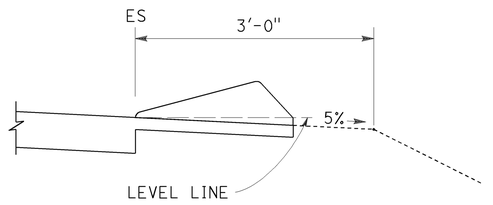

CASE R
See Note 2

TYPE D AND E BACKFILL DETAILS

NOTES:

1. For HMA shoulders only, extend top layer of HMA placed on the shoulder under dike with no joint at the ES. For projects with OGFC shoulders, do not extend OGFC under dike. See project plans for modified dike detail.
2. Case R applies to retrofit only projects where restrictive conditions do not provide enough width for Case F backfill.
3. Type A dike only to be used where restrictive slope conditions do not provide enough width to use Type D or Type E dike.
4. Fill and compact with excavated material to top of dike.
5. Use Type F dike, where dike is required with guard railing installations. See Revised Standard Plan RSP A77N4 for dike positioning details.

DIKE QUANTITIES

TYPE	CUBIC YARDS PER LINEAR FOOT
A	0.0135
C	0.0038
D	0.0293
E	0.0130
F	0.0066

Quantities based on 5% cross slope.

STATE OF CALIFORNIA
DEPARTMENT OF TRANSPORTATION

HOT MIX ASPHALT DIKES

NO SCALE

RSP A87B DATED JULY 19, 2013 SUPERSEDES STANDARD PLAN A87B
DATED MAY 20, 2011 - PAGE 120 OF THE STANDARD PLANS BOOK DATED 2010.

REVISED STANDARD PLAN RSP A87B

6-27-13

TO ACCOMPANY PLANS DATED 6-22-15

Dist	COUNTY	ROUTE	POST MILES TOTAL PROJECT	SHEET No.	TOTAL SHEETS
04	Ala	880	2.9/27.3	874	906

Glenn DeCou
REGISTERED CIVIL ENGINEER

October 19, 2012
PLANS APPROVAL DATE

REGISTERED PROFESSIONAL ENGINEER — Glenn DeCou — No. C34547 — Exp. 9-30-13 — CIVIL — STATE OF CALIFORNIA

THE STATE OF CALIFORNIA OR ITS OFFICERS OR AGENTS SHALL NOT BE RESPONSIBLE FOR THE ACCURACY OR COMPLETENESS OF SCANNED COPIES OF THIS PLAN SHEET.

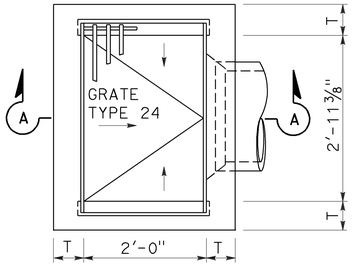

TYPE G1

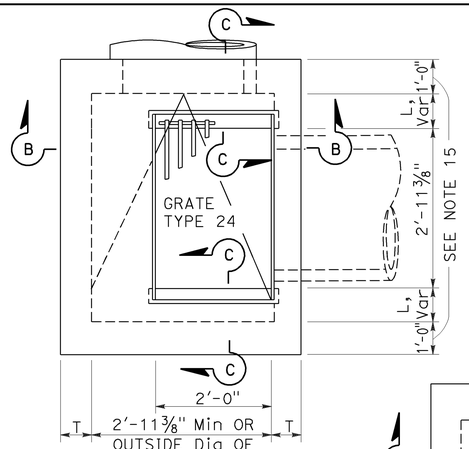

TYPE G2

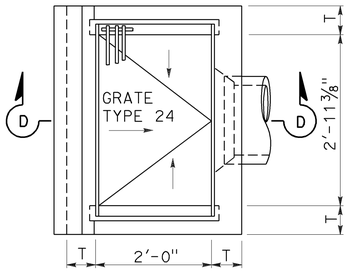

TYPE G3

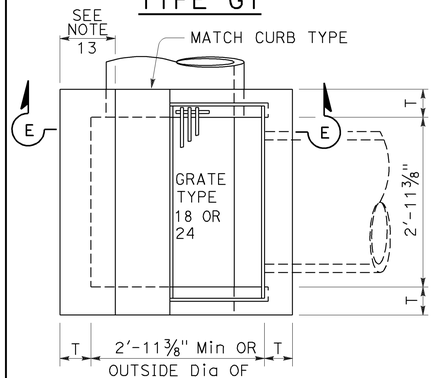

TYPE G4

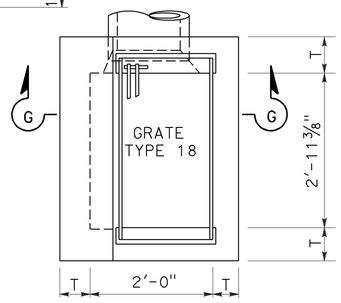

TYPE G6

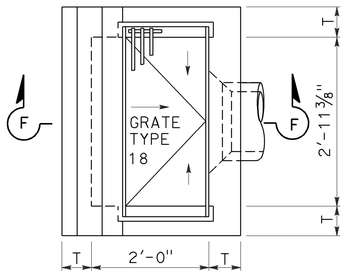

TYPE G5

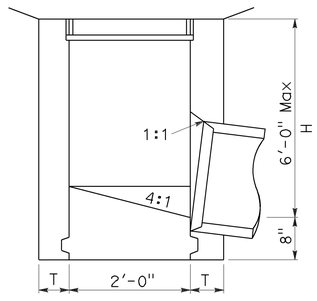

SECTION A-A

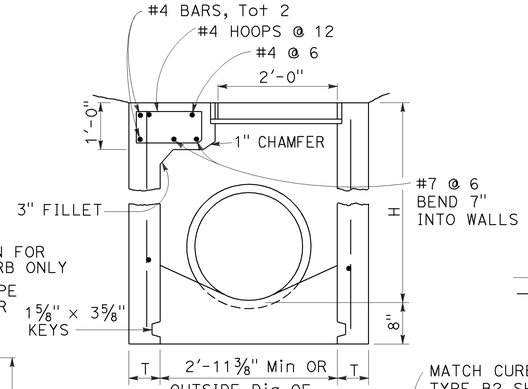

SECTION B-B

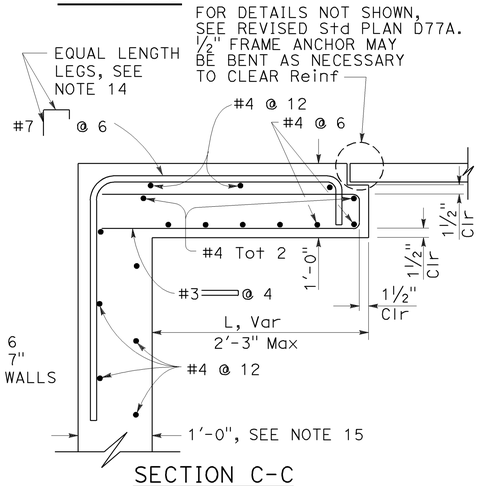

SECTION C-C

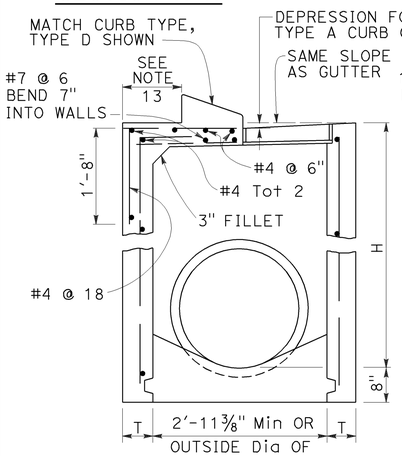

SECTION E-E

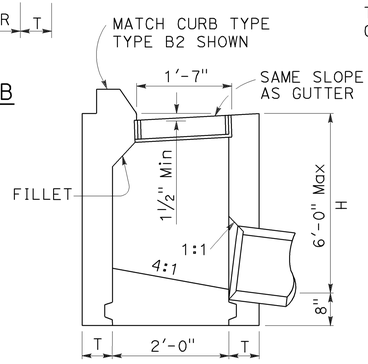

SECTION F-F

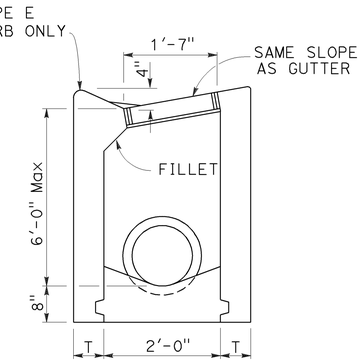

SECTION G-G

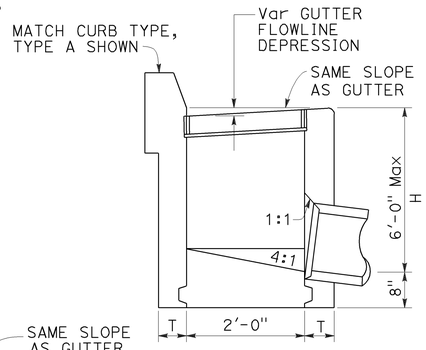

SECTION D-D

NOTES:

1. "H" is the difference in elevation between the outlet pipe flow line and the normal gutter grade line undepressed.
2. For "T" wall thickness, see Table A below.
3. Wall reinforcing not required when "H" is 8'-0" or less and the unsupported width or length is 7'-0" or less. Walls exceeding these limits shall be reinforced with #4 bars @ 1'-6" ± centers placed 1½" clear to inside of box unless otherwise shown.
4. Inlet bottom reinforcing not required. See Standard Plan D74C for alternative reinforced bottom and alternative half round bottom.
5. Steps-None required where "H" is less than 2'-6". Where "H" is 2'-6" or more, install steps with lowest rung 1'-0" above the floor and highest rung not more than 6" below top of inlet. The distance between steps shall not exceed 1'-0" and shall be uniform throughout the length of the wall. Place steps in the wall without an opening. Steps inserts may be substituted for the bar steps. Step inserts shall comply with State Industrial Safety requirements. See Standard Plan D74C for step details.
6. Details shown apply to both metal and concrete pipe.
7. Pipe(s) can be placed in any wall.
8. Curb section shall match adjacent curb.
9. Basin floors shall have wood trowel finish and a minimum slope of 12:3 from all directions toward outlet pipe.
10. Set inlet so that grate bars are parallel to direction of principal surface flow.
11. See Revised Standard Plans D77A and D77B for grate and frame details and weights of miscellaneous iron and steel.
12. See Standard Plan D78A for gutter depression details.
13. This dimenison will vary with different grates, curbs types, box width and wall thickness.
14. Bar may be rotated as necessary to clear opening. Where "L" is 6" or less, bar may be omitted.
15. Where "L" is 6" or less, wall thickness shall be as shown in Table A.
16. Cast-in-place inlets to be formed around all pipes/stubs intersecting the inlet, and concrete poured in one continuous operation. Precast inlets shall have mortared connections conforming to details for Type GCP Inlet shown on Standard Plan D75B. See Standard Specifications for mortar composition.

TABLE A

TYPE	CONCRETE QUANTITIES			
	H=3'-0" TO 8'-0" (T=6")		H=8'-1" TO 20'-0" (T=8")	
	H=3'-0" (CY)	ADDITIONAL PCC PER FOOT (CY)	H=8'-1" (CY)	ADDITIONAL PCC PER FOOT (CY)
G-1	0.95	0.220	See Note A	SEE NOTE A
G-2*	1.31	0.255	3.50	0.357
G-3	1.03	0.220	See Note A	SEE NOTE A
G-4* (TYPE 24)	1.27	0.255	3.48	0.357
G-4* (TYPE 18)	1.30	0.255	3.50	0.357
G-5	1.02	0.220	SEE NOTE A	SEE NOTE A
G-6	1.04	0.220	SEE NOTE A	SEE NOTE A

TABLE BASED ON 8" FLOOR SLAB. NO DEDUCTIONS ARE TO BE MADE TO THESE QUANTITIES BECAUSE OF PIPE OPENINGS, DIFFERENT FLOOR ALTERNATIVES OR DIFFERENT CURB TYPES. * QUANTITIES FOR TYPE G-2 AND G-4 INLETS BASED ON THE MINIMUM INTERIOR DIMENSIONS.

NOTE A:

Maximum allowable height 6'-0".

STATE OF CALIFORNIA
DEPARTMENT OF TRANSPORTATION

DRAINAGE INLETS

NO SCALE

RSP D73 DATED OCTOBER 19, 2012 SUPERSEDES STANDARD PLAN D73 DATED MAY 20, 2011 - PAGE 156 OF THE STANDARD PLANS BOOK DATED 2010.

REVISED STANDARD PLAN RSP D73

2010 REVISED STANDARD PLAN RSP D73

7-19-12

Dist	COUNTY	ROUTE	POST MILES TOTAL PROJECT	SHEET No.	TOTAL SHEETS
04	Ala	880	2.9/27.3	875	906

Raymond Don Tsztoo
REGISTERED CIVIL ENGINEER

April 19, 2013
PLANS APPROVAL DATE

REGISTERED PROFESSIONAL ENGINEER — Raymond Don Tsztoo — No. C37332 — Exp. 6-30-14 — CIVIL — STATE OF CALIFORNIA

THE STATE OF CALIFORNIA OR ITS OFFICERS OR AGENTS SHALL NOT BE RESPONSIBLE FOR THE ACCURACY OR COMPLETENESS OF SCANNED COPIES OF THIS PLAN SHEET.

TO ACCOMPANY PLANS DATED 6-22-15

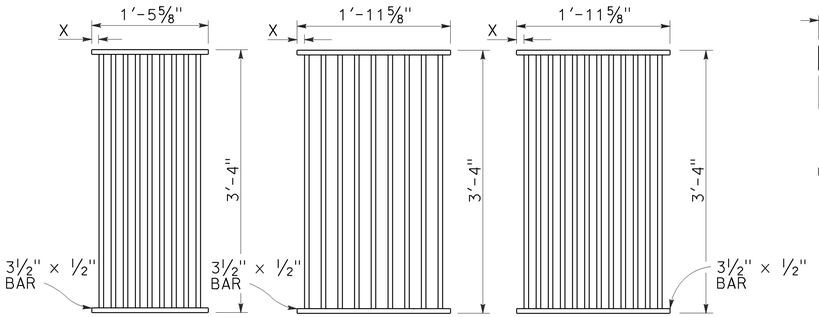

TYPE 18-9

1⅜" Clear spacing. Use within the roadbed on highways where bicycles and pedestrians are excluded.

TYPE 24-9

2" Clear spacing. Use in locations off the roadbed on all types of highways.

TYPE 24-12

1⅜" Clear spacing. Use within the roadbed on highways where bicycles and pedestrians are excluded.

RECTANGULAR GRATE DETAILS

(See table below)

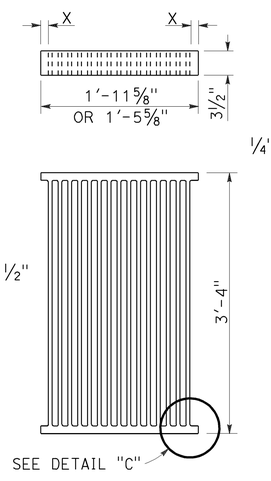

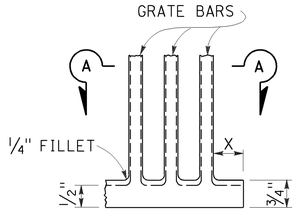

DETAIL "C"

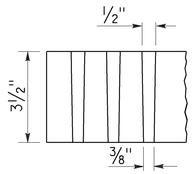

SECTION A-A

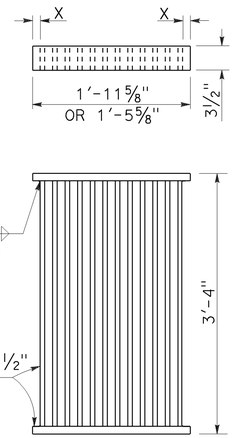

ALTERNATIVE CAST DUCTILE IRON GRATE OR CAST CARBON STEEL GRATE

ALTERNATIVE WELDED GRATE

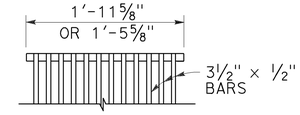

CAST END BLOCK

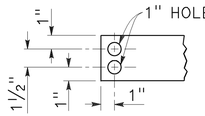

END OF BAR

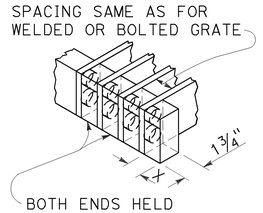

ALTERNATIVE CAST DUCTILE IRON OR CAST CARBON STEEL END BLOCK GRATE

NOTES:

1. Grate type numbers refer to approximate width of grate in inches and number of bars, respectively.
2. Contractor has the option of using cast ductile iron, cast carbon steel, welded, bolted, or cast end block grate.
3. Rounded top of bars optional on all grates.
4. Pipe inlets with a grate shall be placed so that bars parallel direction of principle surface flow.
5. Complete joint penetration butt welds may be substituted for the fillet welds on all anchors.
6. Standard square, hexagon, round or equivalent headed anchors may be substituted for the right angle hooks on the anchors shown on this plan.
7. Grate and frame weights are based on welded grates (weights of face angles, steps, protection bars, etc. are not included).
8. Connect chain to grate and frame only at locations shown on the plans. When chain is required, do not use cast ductile iron grates.

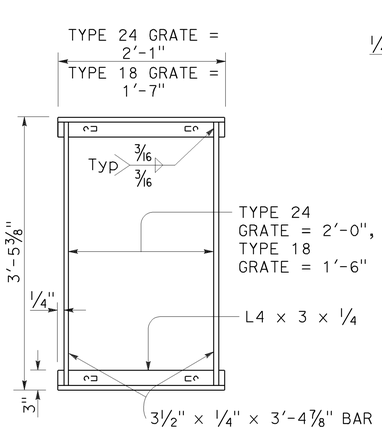

TYPICAL FRAME

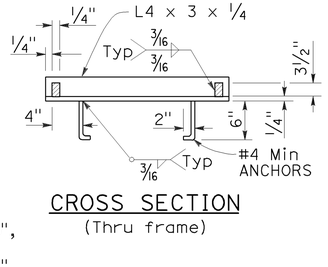

CROSS SECTION

(Thru frame)

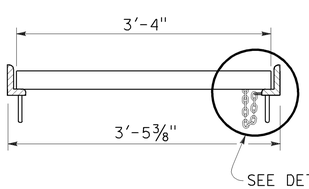

LONGITUDINAL SECTION

(Thru frame and grate)

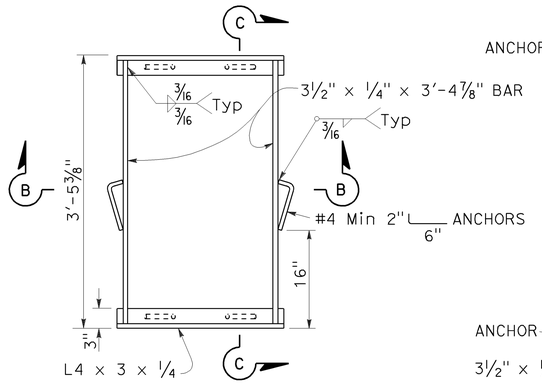

TYPICAL FRAME

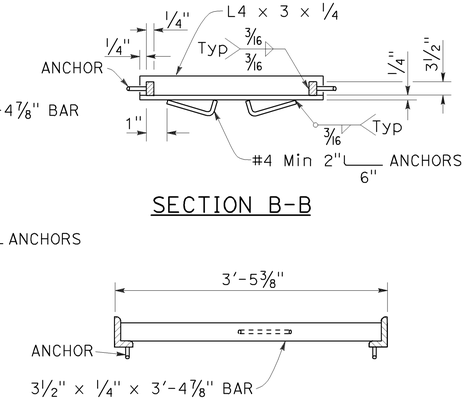

SECTION B-B

SECTION C-C

ALTERNATIVE ANCHOR FOR RECTANGULAR FRAME

(For details not shown, See Rectangular Frame Details)

RECTANGULAR FRAME DETAILS

(For all rectangular grates)

GRATE BAR SPACING TABLE

TYPE	No. OF BARS	CLEAR BAR SPACING	X
18-9	9	1⅜"	1 1/16"
24-9	9	2"	1 9/16"
24-12	12	1⅜"	1¼"

INLET TYPE	COVER TYPE	WEIGHT LB
OS	PLATE	174
OL-7	PLATE	170
OL-10	PLATE	170
OL-14	PLATE	170
OL-21	PLATE	170
OCP	PLATE	112
OCPI	PLATE	112
OCPI	REDWOOD	42
OMP	PLATE	177
OMPI	PLATE	177

INLET TYPE	GRATE TYPE	No. OF GRATES	WEIGHT LB
GDO	24-12	2	634
GOL-7	24-12	1	326
GOL-10	24-12	1	326
GO,G1,G2,G3,G4 (TYPE 24)	24-9	1	263
	24-12	1	326
G4 (TYPE 18),G5,G6	18-9	1	249
GT1	18-9	2	498
GT2	18-9	2	498
GT3	24-12	2	652
GT4	24-12	2	652
TRASH RACK			22
GRATE CHAIN			3

BASIS FOR Misc IRON & STEEL FINAL PAY WEIGHTS FOR DRAINAGE INLETS

(See Note 7)

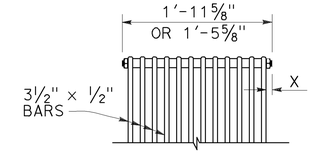

BOLTED END BLOCK

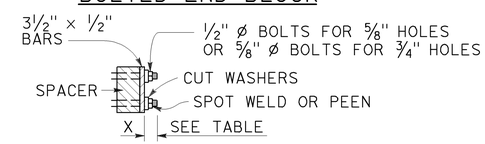

BOLTING DETAIL

ALTERNATIVE BOLTED GRATE

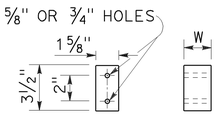

BAR SPACER

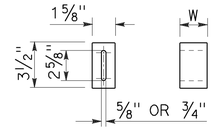

ALTERNATIVE SPACER

W = 1⅜" or 2"

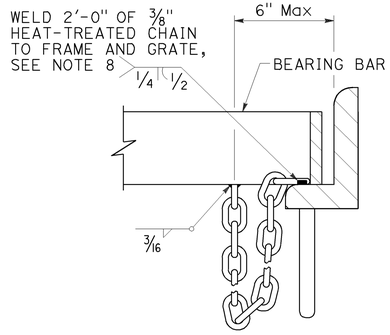

DETAIL "D"

(Steel grates only)

STATE OF CALIFORNIA
DEPARTMENT OF TRANSPORTATION

GRATE DETAILS No. 1

NO SCALE

RSP D77A DATED APRIL 19, 2013 SUPERSEDES RSP D77A DATED JULY 20, 2012 AND STANDARD PLAN D77A DATED MAY 20, 2011 - PAGE 164 OF THE STANDARD PLANS BOOK DATED 2010.

REVISED STANDARD PLAN RSP D77A

2010 REVISED STANDARD PLAN RSP D77A

4-4-13

Dist	COUNTY	ROUTE	POST MILES TOTAL PROJECT	SHEET No.	TOTAL SHEETS
04	Ala	880	2.9/27.3	876	906

Gregory A. Balzer
LICENSED LANDSCAPE ARCHITECT

July 19, 2013
PLANS APPROVAL DATE

LICENSED LANDSCAPE ARCHITECT
Gregory A. Balzer 2015
Gregory A. Balzer
No. 2015
2-28-15
Renewal Date
7-19-13
Date
STATE OF CALIFORNIA

THE STATE OF CALIFORNIA OR ITS OFFICERS OR AGENTS SHALL NOT BE RESPONSIBLE FOR THE ACCURACY OR COMPLETENESS OF SCANNED COPIES OF THIS PLAN SHEET.

TO ACCOMPANY PLANS DATED 6-22-15

A

AB	AGGREGATE BASE
ABS	ACRYLONITRILE-BUTADIENE-STYRENE
AC	ASPHALT CONCRETE
ACC	ARMOR-CLAD CONDUCTORS
Adj	ADJACENT/ADJUSTABLE
AIC	AUXILIARY IRRIGATION CONTROLLER
Alt	ALTERNATIVE
AMEND	AMENDMENT
ARV	AIR RELEASE VALVE
AUTO	AUTOMATIC
AUX	AUXILIARY
AVB	ATMOSPHERIC VACUUM BREAKER

B

B&B	BALLED AND BURLAPPED
B/B	BRASS/BRONZE
B/B/PL	BRASS/BRONZE/PLASTIC
B/PL	BRASS/PLASTIC
BFM	BONDED FIBER MATRIX
Bit Ctd	BITUMINOUS COATED
BP	BOOSTER PUMP
BPA	BACKFLOW PREVENTER ASSEMBLY
BPE	BACKFLOW PREVENTER ENCLOSURE
BV	BALL VALVE

C

C	CONDUIT
CAP	CORRUGATED ALUMINUM PIPE
CARV	COMBINATION AIR RELEASE VALVE
CB	COUPLING BAND
CCA	CAM COUPLER ASSEMBLY
CEC	CONTROLLER ENCLOSURE CABINET
CHDPE	CORRUGATED HIGH DENSITY POLYETHYLENE
CL	CHAIN LINK
CNC	CONTROL AND NEUTRAL CONDUCTORS
Conc	CONCRETE
CP	COPPER PIPE
CS	COMPOST SOCK
CSP	CORRUGATED STEEL PIPE
CST	CENTER STRIP
CV	CHECK VALVE

D

Dia	DIAMETER
DIP	DUCTILE IRON PIPE
DIT	DRIP IRRIGATION TUBING
DG	DECOMPOSED GRANITE
DN	DIAMETER NOMINAL
DVA	DRIP VALVE ASSEMBLY

E

EC	EROSION CONTROL
ECTC	EROSION CONTROL TECHNOLOGY COUNCIL
Elect	ELECTRIC/ELECTRICAL
Elev	ELEVATION
ELL	ELBOW
ENCL	ENCLOSURE
EP	EDGE OF PAVEMENT
ES	EDGE OF SHOULDER
EST	END STRIP
ESTB	ESTABLISHMENT
ETW	EDGE OF TRAVELED WAY

F

F	FULL CIRCLE
F/P	FULL/PART CIRCLE
FCV	FLOW CONTROL VALVE
FERT	FERTILIZER
FG	FINISHED GRADE
FH	FLEXIBLE HOSE
FIPT	FEMALE IRON PIPE THREAD
FIS	FERTILIZER INJECTOR SYSTEM
FL	FLOW LINE
FR	FIBER ROLL
FS	FLOW SENSOR
FSC	FLOW SENSOR CABLE
FV	FLUSH VALVE

G

Galv	GALVANIZED
GARV	GARDEN VALVE
GARVA	GARDEN VALVE ASSEMBLY
GM	GRAVEL MULCH
GPH	GALLONS PER HOUR
GPM	GALLONS PER MINUTE
GSP	GALVANIZED STEEL PIPE
GV	GATE VALVE

H

H	HALF CIRCLE
HDPE	HIGH DENSITY POLYETHYLENE
HP	HORSEPOWER/HINGE POINT
HPL	HIGH PRESSURE LINE
Hwy	HIGHWAY

I

IC	IRRIGATION CONTROLLER
ICC	IRRIGATION CONTROLLER(S) IN CONTROLLER ENCLOSURE CABINET
ID	INSIDE DIAMETER
IFS	IRRIGATION FILTRATION SYSTEM
IPS	IRON PIPE SIZE
IPT	IRON PIPE THREAD
Irr	IRRIGATION

L

L	LENGTH

M

Max	MAXIMUM
MBGR	METAL BEAM GUARD RAILING
MCV	MANUAL CONTROL VALVE
MIC	MASTER IRRIGATION CONTROLLER
Min	MINIMUM
MIPT	MALE IRON PIPE THREAD
Misc	MISCELLANEOUS
Mtl	MATERIAL
MVP	MAINTENANCE VEHICLE PULLOUT

N

NCN	NO COMMON NAME
NL	NOZZLE LINE
No.	NUMBER
NPT	NATIONAL PIPE THREAD

O

O/C	ON CENTER
OD	OUTSIDE DIAMETER
OL	OVERLAP

P

P	PART CIRCLE
PB	PULL BOX
PCC	PORTLAND CEMENT CONCRETE
PE	POLYETHYLENE
Pkt	PACKET
PL	PLASTIC
PLS	PURE LIVE SEED
PLT	PLANT/PLANTING
PLT ESTB	PLANT ESTABLISHMENT
PM	POST MILE
PR	PRESSURE RATED
PRLV	PRESSURE RELIEF VALVE
PRV	PRESSURE REGULATING VALVE
PVC	POLYVINYL CHLORIDE
Pvmt	PAVEMENT

Q

Q	QUARTER CIRCLE
QCV	QUICK COUPLING VALVE

NOTE:
For additional abbreviations, see Standard Plans A10A and A10B.

R

R	RADIUS
RCP	REINFORCED CONCRETE PIPE
RCV	REMOTE CONTROL VALVE
RCVM	REMOTE CONTROL VALVE (MASTER)
RCVMF	REMOTE CONTROL VALVE (MASTER) W/FLOW SENSOR
RCVP	REMOTE CONTROL VALVE W/PRESSURE REGULATOR
RCW	RECYCLED WATER
RECP	ROLLED EROSION CONTROL PRODUCT
REQ	REQUIRED
RICS	REMOTE IRRIGATION CONTROL SYSTEM
R/W	RIGHT OF WAY

S

S	SLIP
SCH	SCHEDULE
SF	STATE-FURNISHED
Shld	SHOULDER
Sq	SQUARE
SST	SIDE STRIP
Sta	STATION
Std	STANDARD
SW	SIDEWALK/SOUND WALL

T

T	THIRD CIRCLE/THREAD
TLS	TRUCK LOADING STANDPIPE
TQ	THREE QUARTER CIRCLE
TRM	TURF REINFORCEMENT MAT
TT	TWO-THIRDS CIRCLE
TWSA	TREE WELL SPRINKLER ASSEMBLY
Typ	TYPICAL

U

UG	UNDERGROUND

W

W	WIDTH
W/	WITH
WM	WATER METER
WS	WYE STRAINER
WSA	WYE STRAINER ASSEMBLY
WSP	WELDED STEEL PIPE
WWM	WELDED WIRE MESH

STATE OF CALIFORNIA
DEPARTMENT OF TRANSPORTATION

LANDSCAPE AND EROSION CONTROL ABBREVIATIONS

NO SCALE

RSP H1 DATED JULY 19, 2013 SUPERSEDES STANDARD PLAN H1
DATED MAY 20, 2011 - PAGE 218 OF THE STANDARD PLANS BOOK DATED 2010.

REVISED STANDARD PLAN RSP H1

2010 REVISED STANDARD PLAN RSP H1

6-28-13

Dist	COUNTY	ROUTE	POST MILES TOTAL PROJECT	SHEET No.	TOTAL SHEETS
04	Ala	880	2.9/27.3	877	906

Gregory A. Balzer
LICENSED LANDSCAPE ARCHITECT

November 15, 2013
PLANS APPROVAL DATE

LICENSED LANDSCAPE ARCHITECT
Gregory A. Balzer 2576
Signature
2-28-15
Renewal Date
11-15-13
Date
STATE OF CALIFORNIA

THE STATE OF CALIFORNIA OR ITS OFFICERS OR AGENTS SHALL NOT BE RESPONSIBLE FOR THE ACCURACY OR COMPLETENESS OF SCANNED COPIES OF THIS PLAN SHEET.

TO ACCOMPANY PLANS DATED 6-22-15

EXISTING	NEW	ITEM DESCRIPTION
		WATER METER (WM)
		BACKFLOW PREVENTER ASSEMBLY (BPA)
		BACKFLOW PREVENTER ENCLOSURE (BPE)
		BOOSTER PUMP (BP)
		TRUCK LOADING STANDPIPE (TLS)
FS	FS	FLOW SENSOR (FS)
X		MASTER IRRIGATION CONTROLLER (MIC)
		AUXILIARY IRRIGATION CONTROLLER (AIC)
		IRRIGATION CONTROLLER (IC) IRRIGATION CONTROLLER (IC) (BATTERY) IRRIGATION CONTROLLER (IC) (SOLAR) IRRIGATION CONTROLLER (IC) (TWO WIRE) IRRIGATION CONTROLLER(S) IN CONTROLLER ENCLOSURE CABINET (ICC)
acc	ACC	ARMOR-CLAD CONDUCTORS (ACC)
cnc	CNC	CONTROL AND NEUTRAL CONDUCTORS (CNC)
		IRRIGATION CONDUIT
		EXTEND IRRIGATION CONDUIT
dip	DIP	DUCTILE IRON PIPE (SUPPLY LINE) (MAIN) (DIP)
		GALVANIZED STEEL PIPE (SUPPLY LINE) (MAIN) (GSP)
		GALVANIZED STEEL PIPE (SUPPLY LINE) (LATERAL) (GSP)
		PLASTIC PIPE (SUPPLY LINE) (MAIN)
		PLASTIC PIPE (SUPPLY LINE) (LATERAL)
cp	CP	COPPER PIPE (SUPPLY LINE)
dit	DIT	DRIP IRRIGATION TUBING
		REMOTE CONTROL VALVE (RCV) REMOTE CONTROL VALVE (MASTER) (RCVM) REMOTE CONTROL VALVE (MASTER) W/FLOW METER (RCVMF)
P	P	REMOTE CONTROL VALVE W/PRESSURE REGULATOR (RCVP)
		EXISTING MANUAL CONTROL VALVE (MCV)
		DRIP VALVE ASSEMBLY (DVA)
		WYE STRAINER ASSEMBLY (WSA)

EXISTING	NEW	ITEM DESCRIPTION
		GATE VALVE (GV)
		BALL VALVE (BV)
		QUICK COUPLING VALVE (QCV)
		CAM COUPLER ASSEMBLY (CCA)
		GARDEN VALVE ASSEMBLY (GARVA)
		PRESSURE REGULATING VALVE (PRV)
		PRESSURE RELIEF VALVE (PRLV)
		FLOW CONTROL VALVE (FCV)
		COMBINATION AIR RELEASE VALVE (CARV)
		CHECK VALVE (CV)
		FLUSH VALVE (FV)
		EXISTING NOZZLE LINE W/TURNING UNION
		EXISTING IRRIGATION SYSTEM
		EXISTING IRRIGATION SYSTEM TO BE REMOVED
		CHAIN LINK GATE
		QUICK COUPLING VALVE W/SPRINKLER PROTECTOR
3	3	SPRINKLER W/SPRINKLER PROTECTOR
	C	CONNECT TO EXISTING SYSTEM
		CAP
		CAP EXISTING
	\\\FR\\\	FIBER ROLL
	\\\CS\\\	COMPOST SOCK

RCV SIZE
IRRIGATION CONTROLLER
CONTROLLER STATION
VALVE IN PARALLEL (IF APPLICABLE)
GPM
QUANTITY OF SPRINKLERS (WHEN SHOWN)

* 2½"-A-2b-40-60

VALVE CODE

* VALVE CODES FOR EXISTING VALVES ARE SHOWN IN A DASHED ENCLOSURE.

STATE OF CALIFORNIA
DEPARTMENT OF TRANSPORTATION

LANDSCAPE AND EROSION CONTROL SYMBOLS

NO SCALE

RSP H2 DATED NOVEMBER 15, 2013 SUPERSEDES RSP H2 DATED JULY 19, 2013 AND STANDARD PLAN H2 DATED MAY 20, 2011 - PAGE 219 OF THE STANDARD PLANS BOOK DATED 2010.

REVISED STANDARD PLAN RSP H2

2010 REVISED STANDARD PLAN RSP H2

10-9-13

Dist	COUNTY	ROUTE	POST MILES TOTAL PROJECT	SHEET No.	TOTAL SHEETS
04	Ala	880	2.9/27.3	878	906

REGISTERED CIVIL ENGINEER

July 19, 2013
PLANS APPROVAL DATE

REGISTERED PROFESSIONAL ENGINEER
Gurinderpal Bhullar
No. C48815
Exp. 9-30-14
CIVIL
STATE OF CALIFORNIA

THE STATE OF CALIFORNIA OR ITS OFFICERS OR AGENTS SHALL NOT BE RESPONSIBLE FOR THE ACCURACY OR COMPLETENESS OF SCANNED COPIES OF THIS PLAN SHEET.

TO ACCOMPANY PLANS DATED 6-22-15

TABLE 1

TAPER LENGTH CRITERIA AND CHANNELIZING DEVICE SPACING

SPEED (S)	MINIMUM TAPER LENGTH * FOR WIDTH OF OFFSET 12 FEET (W)				MAXIMUM CHANNELIZING DEVICE SPACING		
					X	Y	Z **
	TANGENT 2L	MERGING L	SHIFTING L/2	SHOULDER L/3	TAPER	TANGENT	CONFLICT
mph	ft	ft	ft	ft	ft	ft	ft
20	160	80	40	27	20	40	10
25	250	125	63	42	25	50	12
30	360	180	90	60	30	60	15
35	490	245	123	82	35	70	17
40	640	320	160	107	40	80	20
45	1080	540	270	180	45	90	22
50	1200	600	300	200	50	100	25
55	1320	660	330	220	55	110	27
60	1440	720	360	240	60	120	30
65	1560	780	390	260	65	130	32
70	1680	840	420	280	70	140	35

* - For other offsets, use the following merging taper length formula for L:
For speed of 40 mph or less, $L = WS^2/60$
For speed of 45 mph or more, $L = WS$

Where: L = Taper length in feet
W = Width of offset in feet
S = Posted speed limit, off-peak 85th-percentile speed prior to work starting, or the anticipated operating speed in mph

** - Use for taper and tangent sections where there are no pavement markings or where there is a conflict between existing pavement markings and channelizers (CA).

TABLE 2

LONGITUDINAL BUFFER SPACE AND FLAGGER STATION SPACING

SPEED *	Min D **	DOWNGRADE Min D ***		
		-3%	-6%	-9%
mph	ft	ft	ft	ft
20	115	116	120	126
25	155	158	165	173
30	200	205	215	227
35	250	257	271	287
40	305	315	333	354
45	360	378	400	427
50	425	446	474	507
55	495	520	553	593
60	570	598	638	686
65	645	682	728	785
70	730	771	825	891

* - Speed is posted speed limit, off-peak 85th-percentile speed prior to work starting, or the anticipated operating speed in mph

** - Longitudinal buffer space or flagger station spacing

*** - Use on sustained downgrade steeper than -3 percent and longer than 1 mile.

TABLE 3

ADVANCE WARNING SIGN SPACING

ROAD TYPE	DISTANCE BETWEEN SIGNS *		
	A	B	C
	ft	ft	ft
URBAN - 25 mph OR LESS	100	100	100
URBAN - MORE THAN 25 mph TO 40 mph	250	250	250
URBAN - MORE THAN 40 mph	350	350	350
RURAL	500	500	500
EXPRESSWAY / FREEWAY	1000	1500	2640

* - The distances are approximate, are intended for guidance purposes only, and should be applied with engineering judgment. These distances should be adjusted by the Engineer for field conditions, if necessary, by increasing or decreasing the recommmended distances.

2010 REVISED STANDARD PLAN RSP T9

STATE OF CALIFORNIA
DEPARTMENT OF TRANSPORTATION

TRAFFIC CONTROL SYSTEM TABLES FOR LANE AND RAMP CLOSURES

NO SCALE

RSP T9 DATED JULY 19, 2013 SUPERSEDES RSP T9 DATED APRIL 19, 2013 THAT SUPPLEMENTS THE STANDARD PLANS BOOK DATED 2010.

REVISED STANDARD PLAN RSP T9

4-30-13

Dist	COUNTY	ROUTE	POST MILES TOTAL PROJECT	SHEET No.	TOTAL SHEETS
04	Ala	880	2.9/27.3	879	906

REGISTERED CIVIL ENGINEER

April 19, 2013
PLANS APPROVAL DATE

REGISTERED PROFESSIONAL ENGINEER — Gurinderpal Bhullar — No. C48815 — Exp. 9-30-14 CIVIL — STATE OF CALIFORNIA

THE STATE OF CALIFORNIA OR ITS OFFICERS OR AGENTS SHALL NOT BE RESPONSIBLE FOR THE ACCURACY OR COMPLETENESS OF SCANNED COPIES OF THIS PLAN SHEET.

TO ACCOMPANY PLANS DATED 6-22-15

NOTES:

See Revised Standard Plan RSP T9 for tables.

Use cone spacing X for taper segment, Y for tangent segment or Z for conflict situations, as approriate, per Table 1, unless X, Y, or Z cone spacing is shown on this sheet.

Unless otherwise specified in the special provisions, all temporary warning signs shall have black legend on fluorescent orange background.

California codes are designated by (CA). Otherwise, Federal (MUTCD) codes are shown.

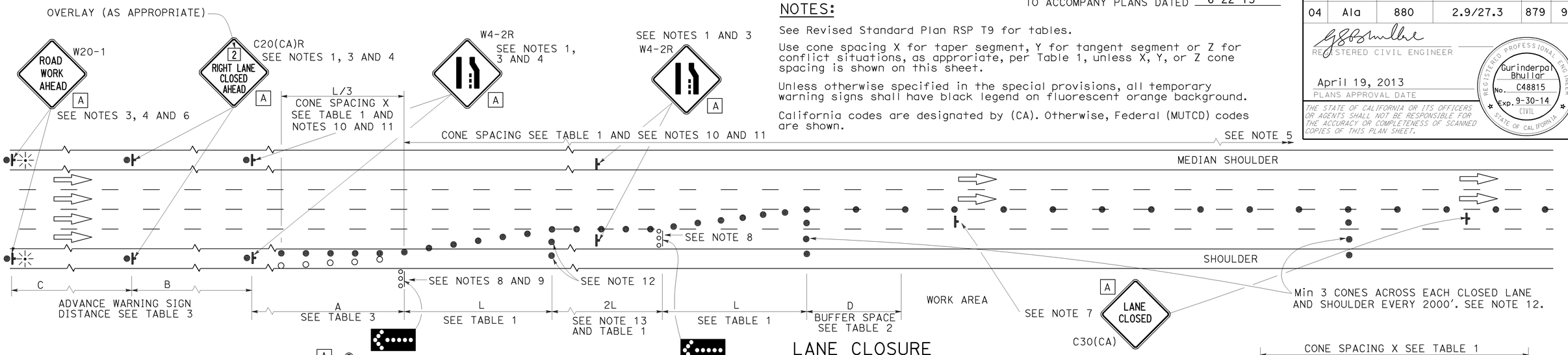

LANE CLOSURE

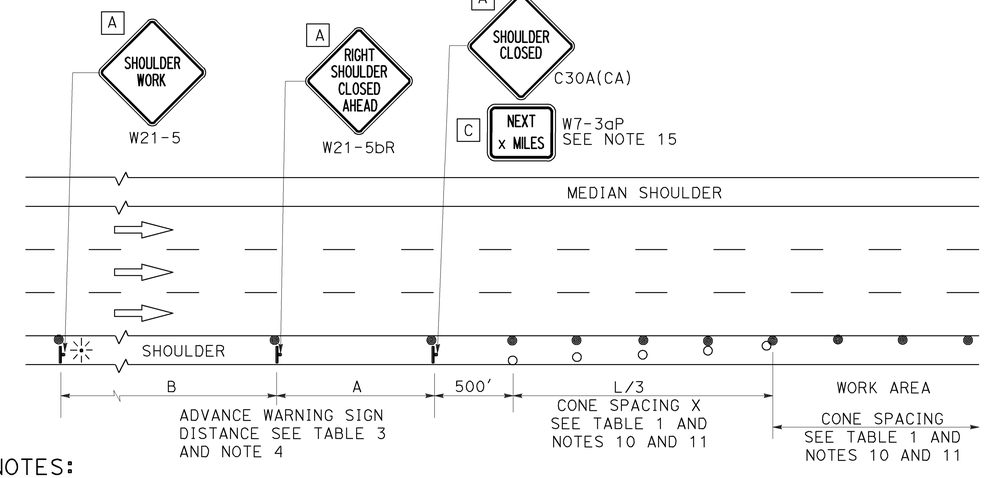

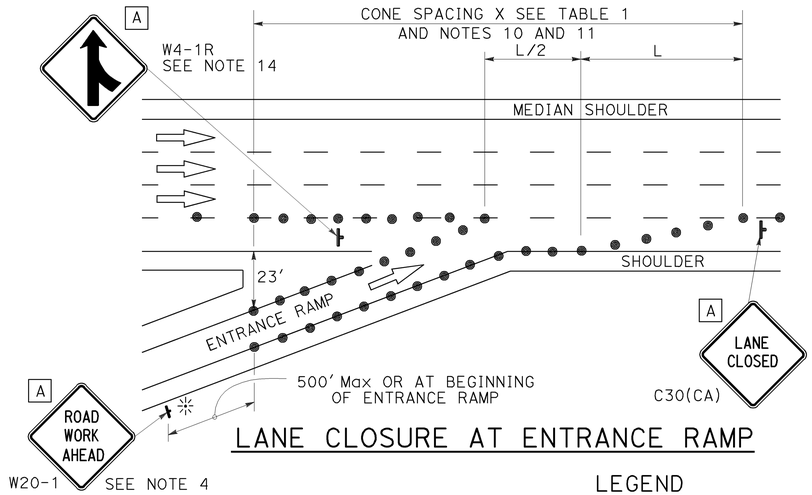

LANE CLOSURE AT ENTRANCE RAMP

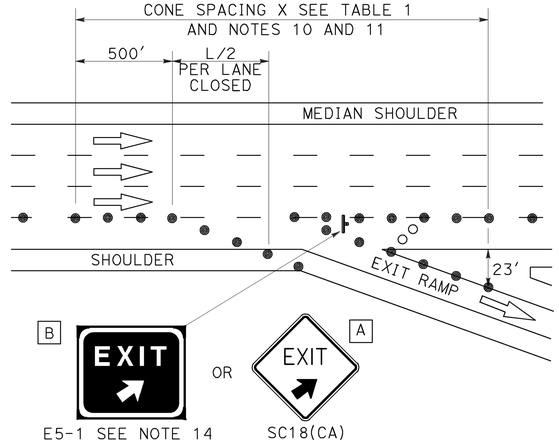

LANE CLOSURE AT EXIT RAMP

NOTES:

1. Median lane closures shall conform to the details as shown except that C20(CA)L and W4-2L signs shall be used.
2. At least one person shall be assigned to provide full time maintenance of traffic control devices for lane closures.
3. Duplicate sign installations are not required:
   a) On opposite shoulder if at least one-half of the available lanes remain open to traffic.
   b) In the median if the width of the median shoulder is less than 8' and the outside lanes are to be closed.
4. Each advance warning sign on each side of the roadway shall be equipped with at least two flags for daytime closure. Each flag shall be at least 16" x 16" in size and shall be orange or fluorescent red-orange in color. Flashing beacons shall be placed at the locations indicated for lane closure during hours of darkness.
5. A G20-2 "END ROAD WORK" sign, with minimum size of 48" x 24" as appropriate, shall be placed at the end of the lane closure unless the end of work area is obvious or ends within a larger project's limits.

SHOULDER CLOSURE

6. If the W20-1 sign would follow within 2000' of a stationary W20-1 or G20-1 "ROAD WORK NEXT _____ MILES", use a C20(CA) sign for the first advance warning sign.
7. Place a C30(CA) sign every 2000' throughout length of lane closure.
8. One flashing arrow sign for each lane closed. The flashing arrow signs shall be Type I.
9. A minimum 1500' of sight distance shall be provided where possible for vehicles approaching the first flashing arrow sign. Lane closures shall not begin at top of crest vertical curve or on a horizontal curve.
10. All cones used for lane closures during the hours of darkness shall be fitted with retroreflective bands (or sleeves) as specified in the specifications.
11. Portable delineators, placed at one-half the spacing indicated for traffic cones may be used instead of cones for daytime closures only.
12. Unless otherwise specified in the special provisions, a minimum of 3 cones shall be placed transversely across each closed lane and shoulder at each location where a taper across a traffic lane ends and every 2000' as shown on the "Lane Closure" detail. Two Type II barricades may be used instead of the 3 cones. The transverse alignment of the cones or barricades on the closed shoulder may be shifted from the transverse alignment to provide access to the work.
13. Unless otherwise specified in the special provisions, the 2L tangent shown along lane lines shall be used between the L tapers required for each closed traffic lane.
14. Unless otherwise specified in the special provisions, the E5-1 or SC18(CA) and W4-1 signs shall be used as shown.
15. A W7-3aP "NEXT___MILES" plaque must be used if theshoulder closure extends beyond the distance that can be perceived by road users.

LEGEND

- TRAFFIC CONE
- TRAFFIC CONE (OPTIONAL TAPER)
- TEMPORARY TRAFFIC CONTROL SIGN
- FLASHING ARROW SIGN (FAS)
- FAS SUPPORT OR TRAILER
- PORTABLE FLASHING BEACON

SIGN PANEL SIZE (Min)

A	48" x 48"
B	72" x 60"
C	36" x 30"

STATE OF CALIFORNIA
DEPARTMENT OF TRANSPORTATION

TRAFFIC CONTROL SYSTEM FOR LANE CLOSURE ON FREEWAYS AND EXPRESSWAYS

NO SCALE

RSP T10 DATED APRIL 19, 2013 SUPERSEDES STANDARD PLAN T10 DATED MAY 20, 2011 - PAGE 237 OF THE STANDARD PLANS BOOK DATED 2010.

REVISED STANDARD PLAN RSP T10

2010 REVISED STANDARD PLAN RSP T10

12-18-12

TO ACCOMPANY PLANS DATED 6-22-15

Dist	COUNTY	ROUTE	POST MILES TOTAL PROJECT	SHEET No.	TOTAL SHEETS
04	Ala	880	2.9/27.3	880	906

REGISTERED CIVIL ENGINEER

April 19, 2013
PLANS APPROVAL DATE

REGISTERED PROFESSIONAL ENGINEER — Gurinderpal Bhullar — No. C48815 — Exp. 9-30-14 CIVIL — STATE OF CALIFORNIA

THE STATE OF CALIFORNIA OR ITS OFFICERS OR AGENTS SHALL NOT BE RESPONSIBLE FOR THE ACCURACY OR COMPLETENESS OF SCANNED COPIES OF THIS PLAN SHEET.

NOTES:

See Revised Standard Plan RSP T9 for tables.

Use cone spacing X for taper segment, Y for tangent segment or Z for conflict situations, as approriate, per Table 1, unless X, Y, or Z cone spacing is shown on this sheet.

Unless otherwise specified in the special provisions, all temporary warning signs shall have black legend on fluorescent orange background.

California codes are designated by (CA). Otherwise, Federal (MUTCD) codes are shown.

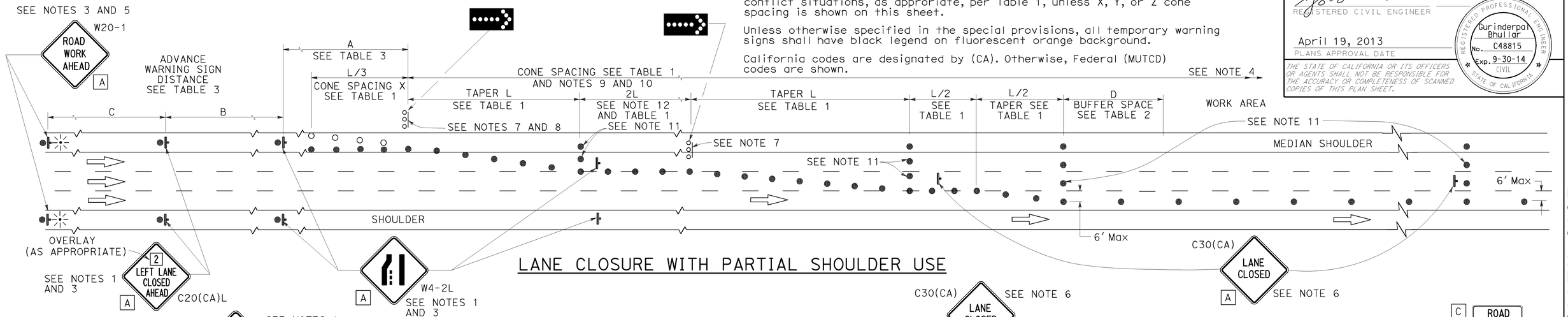

LANE CLOSURE WITH PARTIAL SHOULDER USE

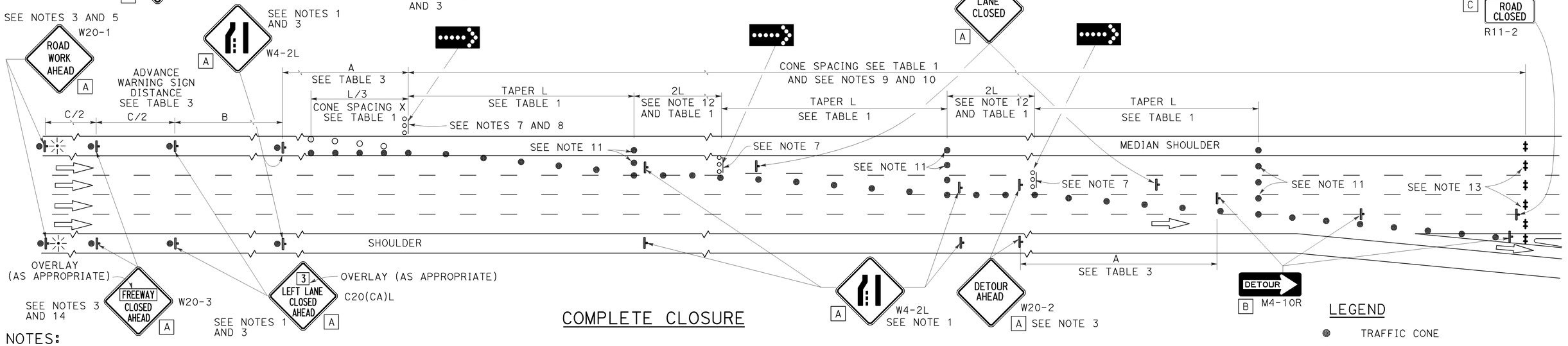

COMPLETE CLOSURE

NOTES:

1. Lane closures on the right side using partial median shoulder as a traffic lane shall conform to the details as shown except that C20(CA)R and W4-2R signs shall be used.
2. At least one person shall be assigned to provide full time maintenance of traffic control devices for lane closures.
3. Each advance warning sign on each side of the roadway shall be equipped with at least two flags for daytime closure. Each flag shall be at least 16" X 16" in size and shall be orange or fluorescent red-orange in color. Flashing beacons shall be placed at the locations indicated for lane closure during hours of darkness.
4. A G20-2 "END ROAD WORK" sign, with minimum size of 48" x 24" as appropriate, shall be placed at the end of the lane closure unless the end of work area is obvious or ends within a larger project's limits.
5. If the W20-1 sign would follow within 2000' of a stationary W20-1 or G20-1 "ROAD WORK NEXT ___ MILES", use a C20(CA) sign for the first advance warning sign.
6. Place a C30(CA) sign every 2000' throughout length of lane closure.
7. One flashing arrow sign for each lane closed. The flashing arrow signs shall be Type I.
8. A minimum 1500' of sight distance shall be provided where possible for vehicles approaching the first flashing arrow sign. Lane closures shall not begin at the top of crest vertical curve or on a horizontal curve.
9. All cones used for lane closures during the hours of darkness shall be fitted with retroreflective bands (or sleeves) as specified in the specifications.
10. Portable delineators, placed at one-half the spacing indicated for traffic cones, may be used instead of cones for daytime closures only.
11. Unless otherwise specified in the special provisions, a minimum of 3 cones shall be placed transversely across each closed lane and shoulder at each location where a taper across a traffic lane ends and every 2000' as shown on the "Lane Closure With Partial Shoulder Use" detail. Two Type II barricades may be used instead of the 3 cones. The transverse alignment of the cones or barricades on the closed shoulder may be shifted from the transverse alignment to provide access to the work.
12. Unless otherwise specified in the special provisions, the 2L tangent shown along lane lines shall be used between the L tapers required for each closed traffic lane.
13. A minimum of Two Type II or III barricades shall be placed across each closed lane and shoulder at the location shown and every 2000' within the complete closure area. Within the complete closure area, the transverse alignment of the barricades on the closed shoulder may be shifted from the transverse alignment to provide access to the work.
14. When specified in the special provisions, a W20-2 "DETOUR AHEAD" sign is to be used in place of the W20-3 "FREEWAY CLOSED AHEAD" sign.

SIGN PANEL SIZE (Min)

- A 48" x 48"
- B 48" x 18"
- C 48" x 30"

LEGEND

- TRAFFIC CONE
- TRAFFIC CONE (OPTIONAL TAPER)
- TEMPORARY TRAFFIC CONTROL SIGN
- FLASHING ARROW SIGN (FAS)
- FAS SUPPORT OR TRAILER
- PORTABLE FLASHING BEACON

STATE OF CALIFORNIA
DEPARTMENT OF TRANSPORTATION

TRAFFIC CONTROL SYSTEM FOR LANE CLOSURES ON FREEWAYS AND EXPRESSWAYS

NO SCALE

RSP T10A DATED APRIL 19, 2013 SUPERSEDES STANDARD PLAN T10A DATED MAY 20, 2011 - PAGE 238 OF THE STANDARD PLANS BOOK DATED 2010.

REVISED STANDARD PLAN RSP T10A

2010 REVISED STANDARD PLAN RSP T10A

12-18-12

TYPICAL RAMP CLOSURES

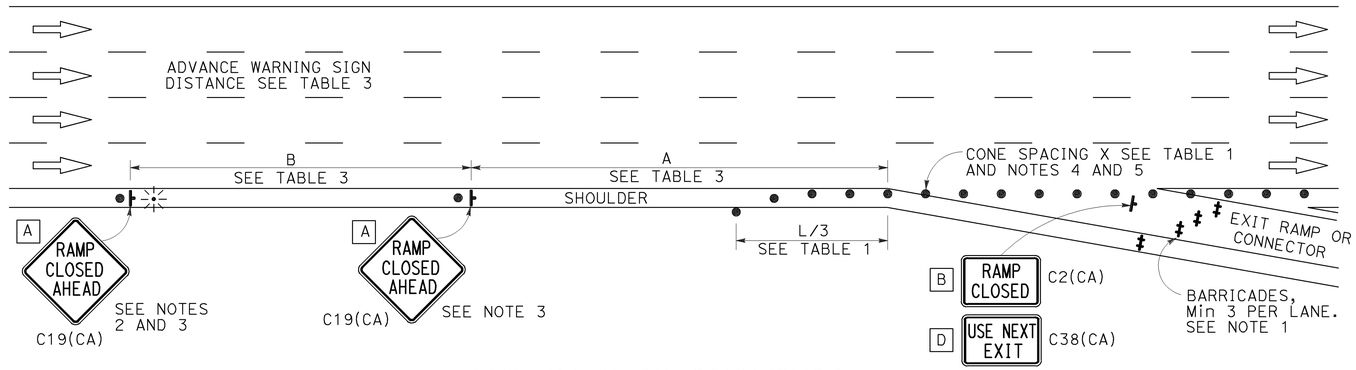

EXIT RAMP OR CONNECTOR

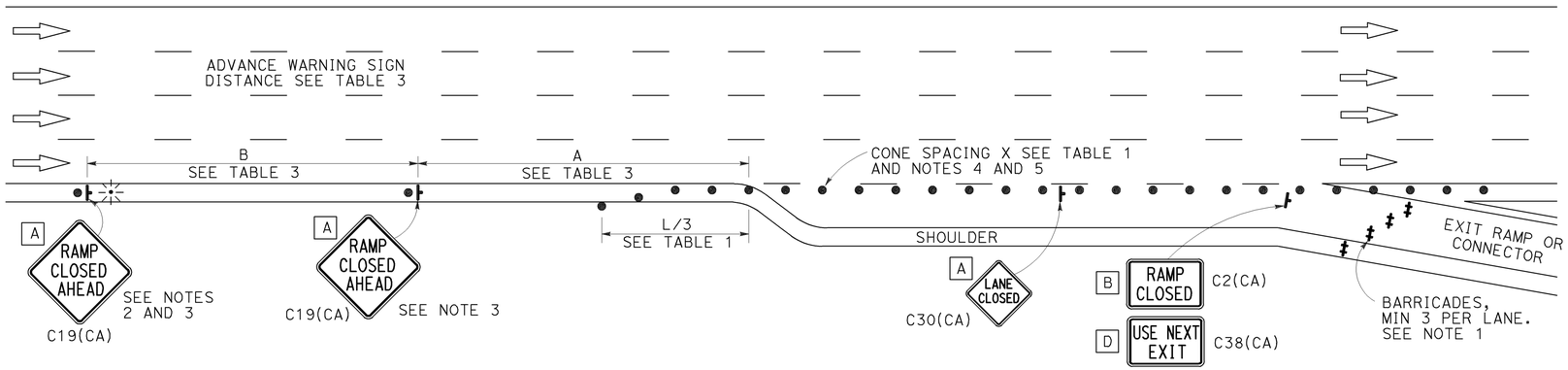

EXIT RAMP OR CONNECTOR WITH ADDITIONAL LANE

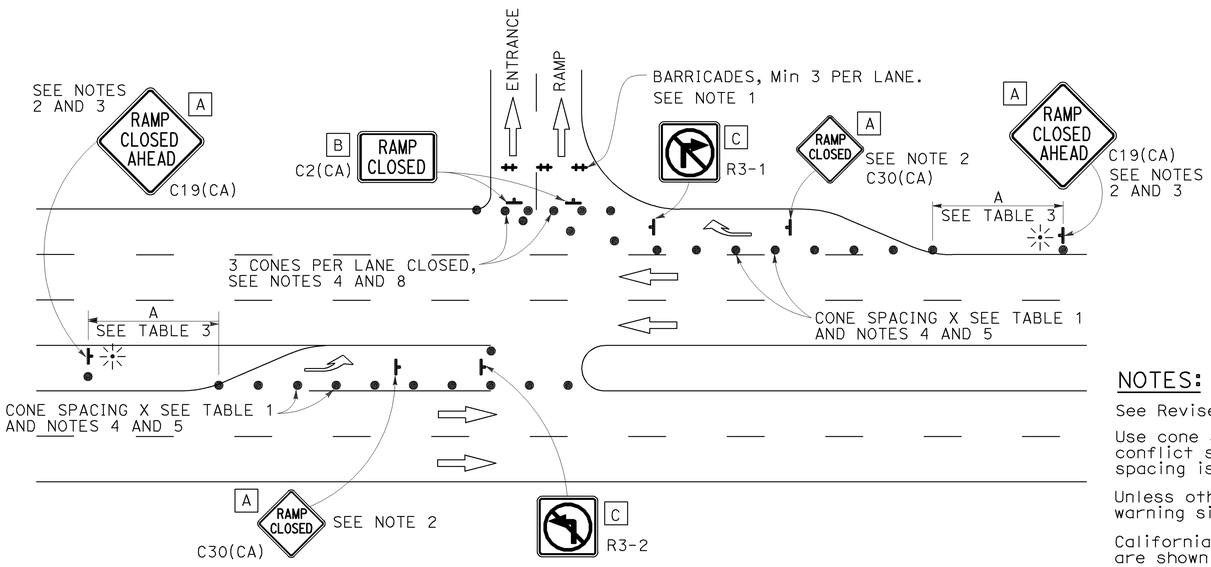

ENTRANCE RAMP WITH TURNING POCKETS

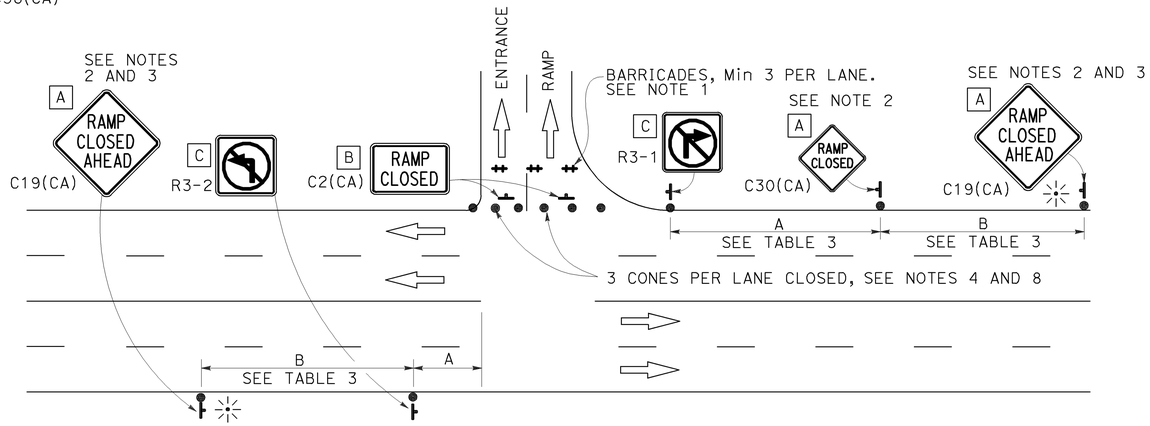

ENTRANCE RAMP WITHOUT TURNING POCKETS

SIGN PANEL SIZE (Min)

- A 48" × 48"
- B 48" × 30"
- C 36" × 36"
- D 48" × 36"

LEGEND

- ● TRAFFIC CONE
- ⊢ TEMPORARY TRAFFIC CONTROL SIGN
- ‡ BARRICADES
- ⁘ PORTABLE FLASHING BEACON

Dist	COUNTY	ROUTE	POST MILES TOTAL PROJECT	SHEET No.	TOTAL SHEETS
04	Ala	880	2.9/27.3	881	906

REGISTERED CIVIL ENGINEER

April 19, 2013
PLANS APPROVAL DATE

REGISTERED PROFESSIONAL ENGINEER
Gurinderpal Bhullar
No. C48815
Exp. 9-30-14
CIVIL
STATE OF CALIFORNIA

THE STATE OF CALIFORNIA OR ITS OFFICERS OR AGENTS SHALL NOT BE RESPONSIBLE FOR THE ACCURACY OR COMPLETENESS OF SCANNED COPIES OF THIS PLAN SHEET.

TO ACCOMPANY PLANS DATED 6-22-15

NOTES:

1. Barricades shall be Type I, II, or III for closures lasting one week or less and Type III for closures lasting longer than one week.
2. In addition to placing the C19(CA) "RAMP CLOSED AHEAD" and C30(CA) "RAMP CLOSED" signs, black on orange overlay plates with the word "CLOSED" may be mounted, as directed by the Engineer, on all guide signs that refer to the closed ramp. The letter size on the overlay shall be the same as the guide sign.
3. Each advance C19(CA) "RAMP CLOSED AHEAD" sign shall be equipped with at least two flags for daytime closure. Each flag shall be at least 16" × 16" in size and shall be orange or fluorescent red-orange in color. A flashing beacon shall be placed on top of the first C19(CA) sign during hours of darkness.
4. All cones used for ramp closures during the hours of darkness shall be fitted with retroreflective bands (or sleeves) as specified in the specifications.
5. Portable delineators, placed at one-half the spacing indicated for traffic cones, may be used instead of cones for daytime ramp closures only.
6. At least one person shall be assigned to provide full time maintenance of traffic control devices, unless otherwise directed by the Engineer.
7. The existing "EXIT" signs shall be covered during ramp closures.
8. A minimum of 3 cones shall be placed transversely across each closed lane and shoulder.

NOTES:

See Revised Standard Plan RSP T9 for tables.

Use cone spacing X for taper segment, Y for tangent segment or Z for conflict situations, as approriate, per Table 1, unless X, Y, or Z cone spacing is shown on this sheet.

Unless otherwise specified in the special provisions, all temporary warning signs shall have black legend on fluorescent orange background.

California codes are designated by (CA). Otherwise, Federal (MUTCD) codes are shown.

STATE OF CALIFORNIA
DEPARTMENT OF TRANSPORTATION

TRAFFIC CONTROL SYSTEM FOR RAMP CLOSURE

NO SCALE

RSP T14 DATED APRIL 19, 2013 SUPERSEDES STANDARD PLAN T14
DATED MAY 20, 2011 - PAGE 242 OF THE STANDARD PLANS BOOK DATED 2010.

REVISED STANDARD PLAN RSP T14

2010 REVISED STANDARD PLAN RSP T14

12-18-12

Dist	COUNTY	ROUTE	POST MILES TOTAL PROJECT	SHEET No.	TOTAL SHEETS
04	Ala	880	2.9/27.3	882	906

REGISTERED CIVIL ENGINEER

April 19, 2013
PLANS APPROVAL DATE

REGISTERED PROFESSIONAL ENGINEER
Gurinderpal Bhullar
No. C48815
Exp. 9-30-14
CIVIL
STATE OF CALIFORNIA

THE STATE OF CALIFORNIA OR ITS OFFICERS OR AGENTS SHALL NOT BE RESPONSIBLE FOR THE ACCURACY OR COMPLETENESS OF SCANNED COPIES OF THIS PLAN SHEET.

TO ACCOMPANY PLANS DATED 6-22-15

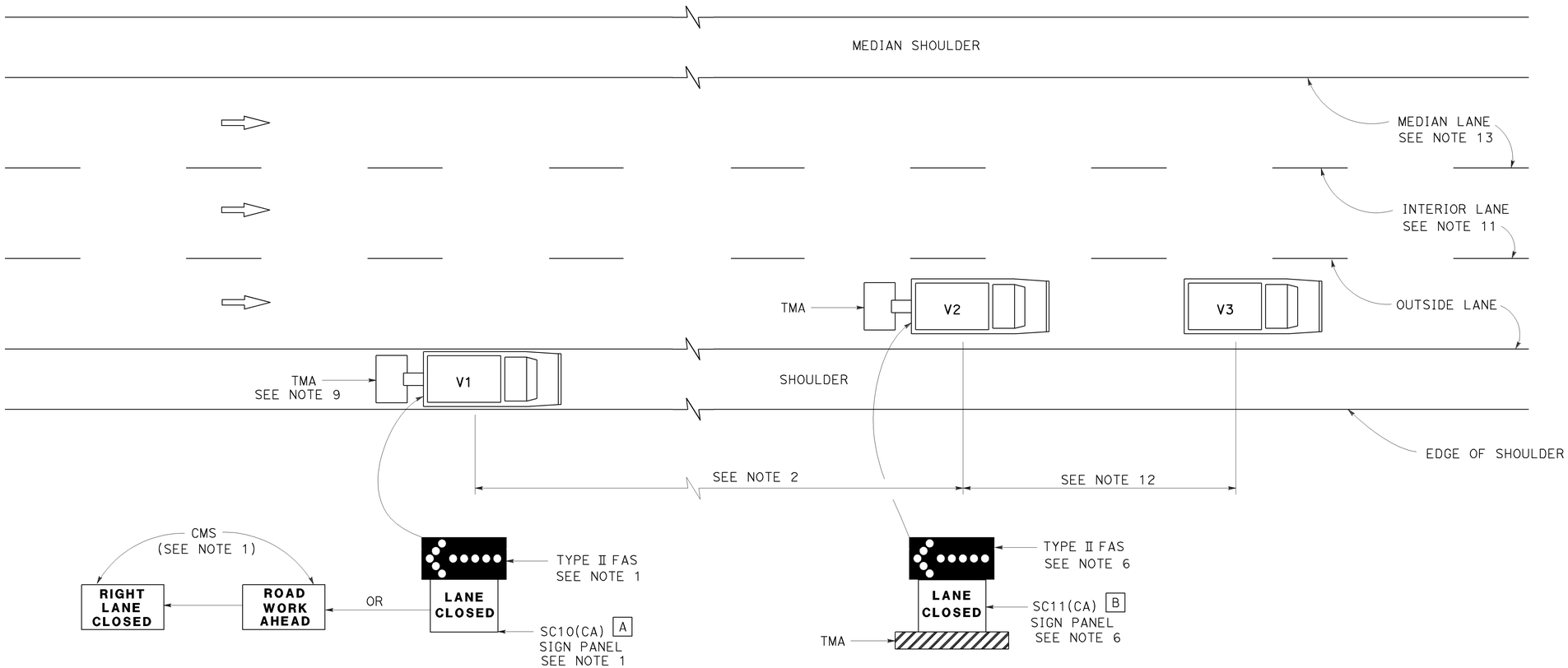

SIGN PANEL SIZE (Min)

A 66" x 36"

B 54" x 42"

LEGEND

V1	SIGN VEHICLE
V2	SHADOW VEHICLE
V3	WORK/APPLICATION VEHICLE
	FLASHING ARROW SIGN (FAS)
CMS	CHANGEABLE MESSAGE SIGN
TMA	TRUCK-MOUNTED ATTENUATOR

MOVING LANE CLOSURE ON MEDIAN LANE OR OUTSIDE LANE OF MULTILANE HIGHWAYS

NOTES:

1. Either a changeable message sign or a SC10(CA) sign panel and a Type II flashing arrow sign shall be mounted on the rear of sign vehicle V1. The changeable message sign shall be sequenced to show the "ROAD WORK AHEAD" message first, followed by the "RIGHT LANE CLOSED" message. For median lane closure, the flashing arrow symbol shall be reversed with the arrowhead on the right and the changeable message sign shall show "LEFT LANE CLOSED".
2. If traffic queues develop, sign vehicle V1 should be positioned upstream from the end of queue. Sign vehicle V1 shall be positioned where highly visible when shoulders are not available.
3. A minimum sight distance of 1500′ should be provided in advance of sign vehicle V1.
4. Sign vehicle V1 should remain at the beginning of horizontal or vertical curves until the other vehicles (V2 and V3) are far enough beyond the curve to resume the minimum sight distance of 1500′.
5. Vehicle-mounted sign panels shall have Type III or above retroreflective sheeting, black on white, or black on fluorescent orange, with 6" minimum series D letters per Caltrans sign specifications.
6. Shadow vehicle V2 shall be equipped with a truck-mounted attenuator. The sign panel shown and a Type II flashing arrow sign shall be mounted on the rear of shadow vehicle V2. For median lane closure the flashing arrow sign symbol shall be displayed with the arrowhead on the right.
7. All vehicles used for lane closures shall be equipped with two-way radios, and the vehicle operators shall maintain communication during the work or application operation.
8. All vehicles shall be equipped with flashing or rotating amber lights.
9. If sign vehicle V1 encroaches into the traffic lane due to insufficient shoulder width, sign vehicle V1 shall be equipped with a truck-mounted attenuator. Sign vehicle V1 shall stay as close to the edge of shoulder as practicable.
10. Where workers would be on foot in the work area, a stationary type lane closure (Revised Standard Plan T10, T11, etc., as applicable) shall be used instead of this plan.
11. For moving lane closure on interior lane of multilane highways, use Revised Standard Plan T16.
12. The spacing between work vehicle(s) and the shadow vehicles, and between each shadow vehicle should be minimized to deter road users from driving in between.
13. When the work/application vehicle V3 occupies the median lane, sign vehicle V1 should drive in the median shoulder and indicate left lane closed ahead.

STATE OF CALIFORNIA
DEPARTMENT OF TRANSPORTATION

TRAFFIC CONTROL SYSTEM FOR MOVING LANE CLOSURE ON MULTILANE HIGHWAYS

NO SCALE

RSP T15 DATED APRIL 19, 2013 SUPERSEDES STANDARD PLAN T15
DATED MAY 20, 2011 - PAGE 243 OF THE STANDARD PLANS BOOK DATED 2010.

REVISED STANDARD PLAN RSP T15

2010 REVISED STANDARD PLAN RSP T15

12-18-12

Dist	COUNTY	ROUTE	POST MILES TOTAL PROJECT	SHEET No.	TOTAL SHEETS
04	Ala	880	2.9/27.3	883	906

REGISTERED CIVIL ENGINEER

April 19, 2013
PLANS APPROVAL DATE

REGISTERED PROFESSIONAL ENGINEER
Gurinderpal Bhullar
No. C48815
Exp. 9-30-14
CIVIL
STATE OF CALIFORNIA

THE STATE OF CALIFORNIA OR ITS OFFICERS OR AGENTS SHALL NOT BE RESPONSIBLE FOR THE ACCURACY OR COMPLETENESS OF SCANNED COPIES OF THIS PLAN SHEET.

TO ACCOMPANY PLANS DATED 6-22-15

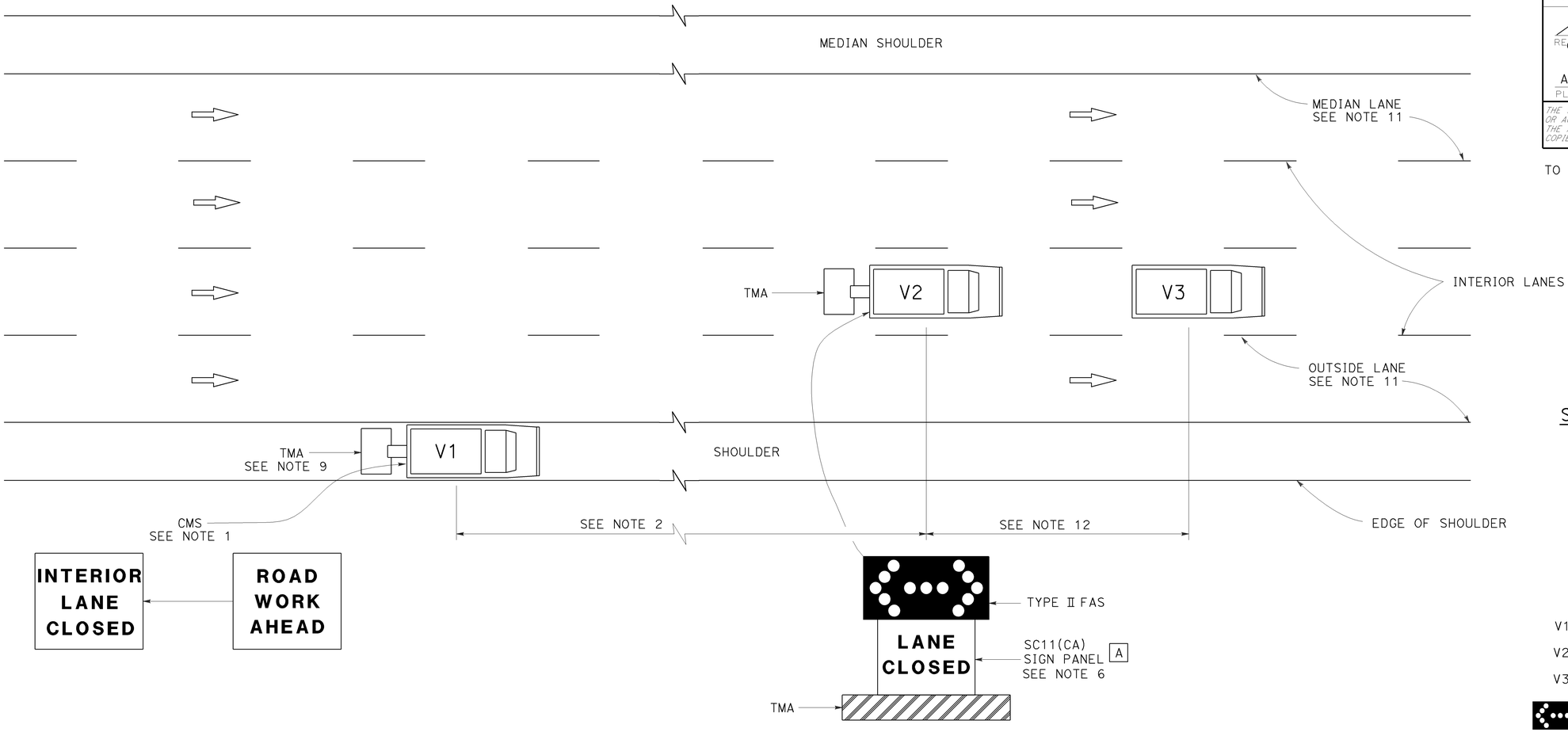

MOVING LANE CLOSURE ON INTERIOR LANE OF MULTILANE HIGHWAYS

SIGN PANEL SIZE (Min)

A 54" x 42"

LEGEND

V1	SIGN VEHICLE
V2	SHADOW VEHICLE
V3	WORK/APPLICATION VEHICLE
	FLASHING ARROW SIGN (FAS) IN FLASHING DOUBLE ARROW MODE
CMS	CHANGEABLE MESSAGE SIGN
TMA	TRUCK-MOUNTED ATTENUATOR

NOTES:

1. A changeable message sign shall be mounted on the rear of sign vehicle V1. The changeable message sign shall be sequenced to show the "ROAD WORK AHEAD" message first, followed by the "INTERIOR LANE CLOSED" message. The message "CENTER LANE CLOSED" may be used in place of the "INTERIOR LANE CLOSED" message.
2. If traffic queues develop, sign vehicle V1 should be positioned upstream from the end of queue. Sign vehicle V1 shall be positioned where highly visible when shoulders are not available.
3. A minimum sight distance of 1500′ should be provided in advance of sign vehicle V1.
4. Sign vehicle V1 should remain at the beginning of horizontal or vertical curves until the other vehicles (V2 and V3) are far enough beyond the curve to resume the minimum sight distance of 1500′.
5. Vehicle-mounted sign panels shall have Type III or above retroreflective sheeting, black on white, or black on fluorescent orange, with 6" minimum series D letters per Caltrans sign specifications.
6. Shadow vehicle V2 shall be equipped with a truck-mounted attenuator. The sign panel shown and a Type II flashing arrow sign shall be mounted on the rear of shadow vehicle V2.
7. All vehicles used for lane closures shall be equipped with two-way radios, and the vehicle operators shall maintain communication during the work or application operation.
8. All vehicles shall be equipped with flashing or rotating amber lights.
9. If sign vehicle V1 encroaches into the traffic lane due to insufficient shoulder width, sign vehicle V1 shall be equipped with a truck-mounted attenuator. Sign vehicle V1 shall stay as close to the edge of shoulder as practicable.
10. Where workers would be on foot in the work area, a stationary type lane closure (Revised Standard Plan T10, T11 etc., as applicable) shall be used instead of this plan.
11. For moving lane closure on median lane or outside lane of multilane highways, use Revised Standard Plan T15.
12. The spacing between work vehicle(s) and the shadow vehicles, and between each shadow vehicle should be minimized to deter road users from driving in between.

STATE OF CALIFORNIA
DEPARTMENT OF TRANSPORTATION

TRAFFIC CONTROL SYSTEM FOR MOVING LANE CLOSURE ON MULTILANE HIGHWAYS

NO SCALE

RSP T16 DATED APRIL 19, 2013 SUPERSEDES STANDARD PLAN T16
DATED MAY 20, 2011 - PAGE 244 OF THE STANDARD PLANS BOOK DATED 2010.

REVISED STANDARD PLAN RSP T16

2010 REVISED STANDARD PLAN RSP T16

12-18-13

Dist	COUNTY	ROUTE	POST MILES TOTAL PROJECT	SHEET No.	TOTAL SHEETS
04	Ala	880	2.9/27.3	884	906

REGISTERED CIVIL ENGINEER

July 19, 2013
PLANS APPROVAL DATE

REGISTERED PROFESSIONAL ENGINEER — Stanley P. Johnson — No. C57793 — Exp. 3-31-14 CIVIL — STATE OF CALIFORNIA

THE STATE OF CALIFORNIA OR ITS OFFICERS OR AGENTS SHALL NOT BE RESPONSIBLE FOR THE ACCURACY OR COMPLETENESS OF SCANNED COPIES OF THIS PLAN SHEET.

TO ACCOMPANY PLANS DATED 6-22-15

INSTRUCTIONS TO FABRICATOR

PROJECT PLANS SHOW:

1. Sign structure location.
2. Length of structure frame.
3. Panel size and locations on structure.
4. Walkway length for two post signs.
5. Post type and height to bottom of frame.
6. Base plate elevation.
7. Footing elevation or location of pile foundation.
8. Photoelectric unit location if required.

REFER TO THE FOLLOWING STANDARD PLANS FOR DETAILS NOT SHOWN ON PROJECT PLANS:

Sheet No.	SHEET NAME
S1	Overhead Signs-Truss, Instructions and Examples
S2	Overhead Signs-Truss, Single Post Type, Post Types II to IX
S3	Overhead Signs-Truss, Single Post Type, Base Plate and Anchorage Details
S4	Overhead Signs-Truss, Single Post Type, Structural Frame Members Details No. 1
S5	Overhead Signs-Truss, Single Post Type, Structural Frame Members Details No. 2
S6	Overhead Signs-Truss, Gusset Plate Details
S8	Overhead Signs-Truss, Single Post Type, Round Pedestal Pile Foundation
S9	Overhead Signs-Truss, Two Post Type, Post Types I-S through VIII-S
S10	Overhead Signs-Truss, Two Post Type, Base Plate and Anchorage Details
S11	Overhead Signs-Truss, Two Post Type, Structural Frame Members
S12	Overhead Signs-Truss, Structural Frame Details
S13	Overhead Signs-Truss, Frame Juncture Details
S15	Overhead Signs-Truss, Two Post Type, Round Pedestal Pile Foundation
S16	Overhead Signs, Walkway Details No. 1
S17	Overhead Signs, Walkway Details No. 2
S17A	Overhead Signs, Walkway Details No. 3
S18	Overhead Signs, Walkway Safety Railing Details
S19	Overhead Signs-Truss, Sign Mounting Details, Laminated Panel-Type A
S20	Overhead Signs, Steel Frames, Removable Sign Panel Frames
S21	Overhead Signs, Removable Sign Panel Frames, Mounting Details
S22	Overhead Signs-Truss, Removable Sign Panel Frames, 9′-2" and 10′-0" Sign Panels

WALKWAY BRACKETS:

Space all walkway brackets maintaining uniform spacing where possible. Maximum spacing shall not exceed 5′-6".

LIGHTING FIXTURE SUPPORTS:

Where distance from walkway bracket to end of sign panel exceeds 1′-4", extend lighting fixture supports to next walkway bracket. See Example No. 2.

WALKWAY AND SAFETY RAILING:

Walkway to be continuous for entire length of frame for single post signs. For two post signs, see Project Plans. Safety railing to protect entire walkway, but continuous for no more than 11′-0" in one unit.

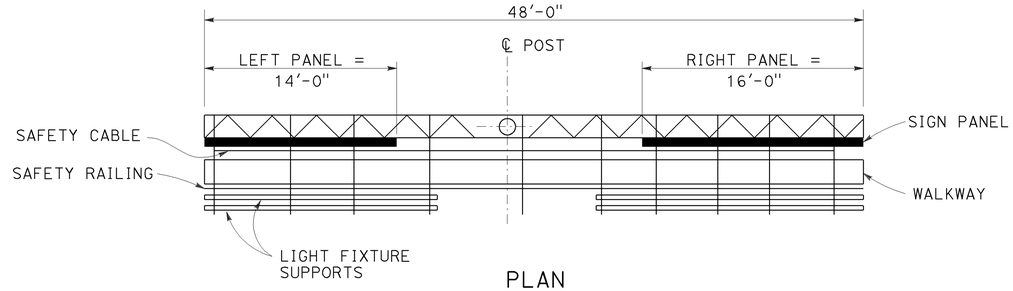

PLAN

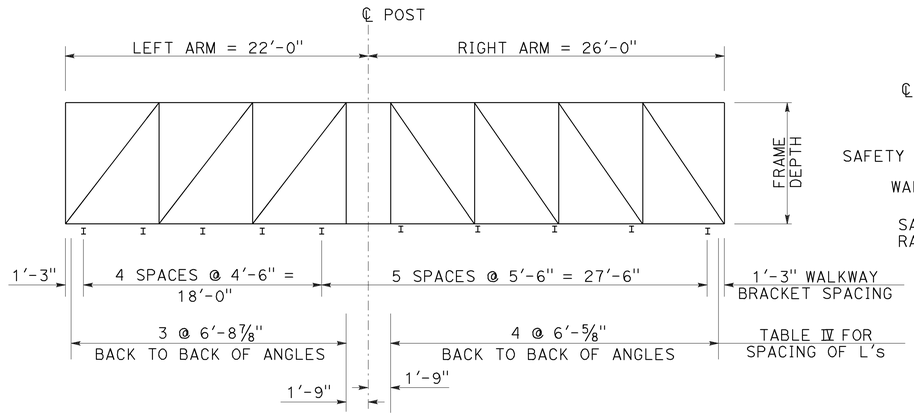

ELEVATION

UNBALANCED SINGLE POST TYPE

Example No. 1

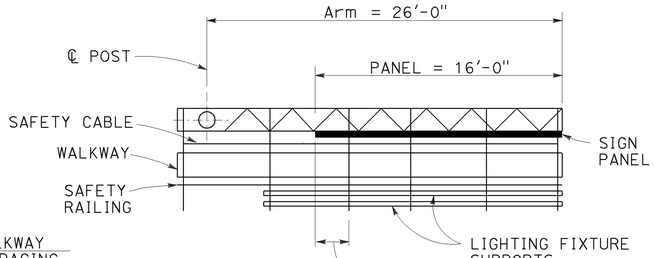

PLAN

CANTILEVER SINGLE POST TYPE

Example No. 2

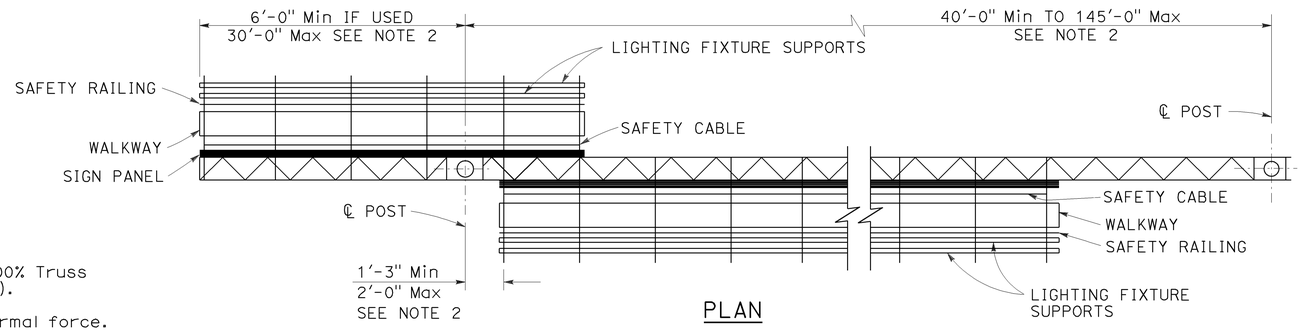

PLAN

TWO POST TYPE WITH CANTILEVER (PART DOUBLE-FACED)

Example No. 3

GENERAL NOTES:

LOADING:

WIND LOADING:

Normal to face of sign: 40.3 psf on 100% Truss surface area (i.e. 100% panel coverage).

Transverse to face of sign: 20% of normal force.

WALKWAY LOADING:

Dead load +500 LB concentrated live load.

UNIT STRESSES:

STRUCTURAL STEEL: fy = 36,000 psi
REINFORCED CONCRETE: fy = 60,000 psi
f′c = 3600 psi
FOOTING SOIL PRESSURE: 2.5 ksf (spread footing)

MINIMUM CLEARANCE

Vertical roadway clearance 18′-0" (bottom of walkway system)

WELDING:

All welding continuous unless otherwise noted on the plans.

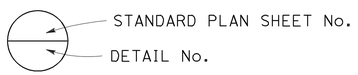

NOTES:

1. Signs are shown and dimensioned looking in the direction of traffic. Double faced signs are shown and dimensioned looking ahead along stationing.
2. Mandatory dimension limit.

STATE OF CALIFORNIA
DEPARTMENT OF TRANSPORTATION

OVERHEAD SIGNS-TRUSS INSTRUCTIONS AND EXAMPLES

NO SCALE

RSP S1 DATED JULY 19, 2013 SUPERSEDES STANDARD PLAN S1 DATED MAY 20, 2011 - PAGE 334 OF THE STANDARD PLANS BOOK DATED 2010.

REVISED STANDARD PLAN RSP S1

2010 REVISED STANDARD PLAN RSP S1

7-11-13

TABLE XV

POST TYPE	PIPE		CAP PLATE SIZE FOR CHORD L's 5 x 5	CAP PLATE SIZE FOR CHORD L's 6 x 6	ROUND PEDESTAL					SQUARE PEDESTAL						SPREAD FOOTING					
					PEDESTAL SIZE	VERTICAL J-BARS		SPIRAL		PEDESTAL SIZE	VERTICAL J-BARS			HOOP		(SEE NOTE 2)	REINFORCEMENT				
	NPS	THICKNESS			Dia	EQUALLY SPACED TOTAL	BAR SIZE	BAR SIZE	PITCH	SQUARE	EQUALLY SPACED TOTAL	BAR SIZE	# OF BARS EA FACE	BAR SIZE	SPACING		WIDTH TOP	WIDTH BOTTOM	LONGITUDINAL TOP	LONGITUDINAL BOTTOM	FOOTING STIRRUPS
II	14	1/2"	2'-0" x 2'-0" x 1"	2'-2" x 2'-2" x 1"	5'-3"	16	#10	#5	3 1/2"	5'-3"	16	#10	5	#5	3 1/2"	12'-0" x 14'-0" x 2'-6"	14-#6	14-#7	13-#9	13-#9	#5 @ 12
III	16		2'-2" x 2'-2" x 1"	2'-4" x 2'-4" x 1"												12'-0" x 14'-0" x 2'-6"	15-#6	15-#7			
IV	18		2'-4" x 2'-4" x 1"	2'-6" x 2'-6" x 1"												12'-0" x 14'-0" x 2'-6"	15-#6	15-#7			
V	20		2'-6" x 2'-6" x 1"	2'-8" x 2'-8" x 1"												13'-0" x 14'-0" x 2'-6"	15-#6	15-#7	14-#9	14-#9	
VI	24		2'-10" x 2'-10" x 1"	3'-0" x 3'-0" x 1"	5'-9"		#11			5'-9"		#11				13'-0" x 16'-0" x 2'-6"	17-#7	17-#7		14-#11	
VII	24	3/4"														13'-0" x 17'-0" x 2'-6"	18-#7	18-#7			
VIII	24	31/32"														13'-0" x 18'-0" x 2'-6"	19-#7	19-#7			
IX	24	31/32"														13'-0" x 18'-0" x 2'-6"	19-#7	19-#7			

Dist	COUNTY	ROUTE	POST MILES TOTAL PROJECT	SHEET No.	TOTAL SHEETS
04	Ala	880	2.9/27.3	885	906

REGISTERED CIVIL ENGINEER

July 19, 2013
PLANS APPROVAL DATE

Stanley P. Johnson No. C57793 Exp. 3-31-14 CIVIL — REGISTERED PROFESSIONAL ENGINEER — STATE OF CALIFORNIA

THE STATE OF CALIFORNIA OR ITS OFFICERS OR AGENTS SHALL NOT BE RESPONSIBLE FOR THE ACCURACY OR COMPLETENESS OF SCANNED COPIES OF THIS PLAN SHEET.

TO ACCOMPANY PLANS DATED 6-22-15

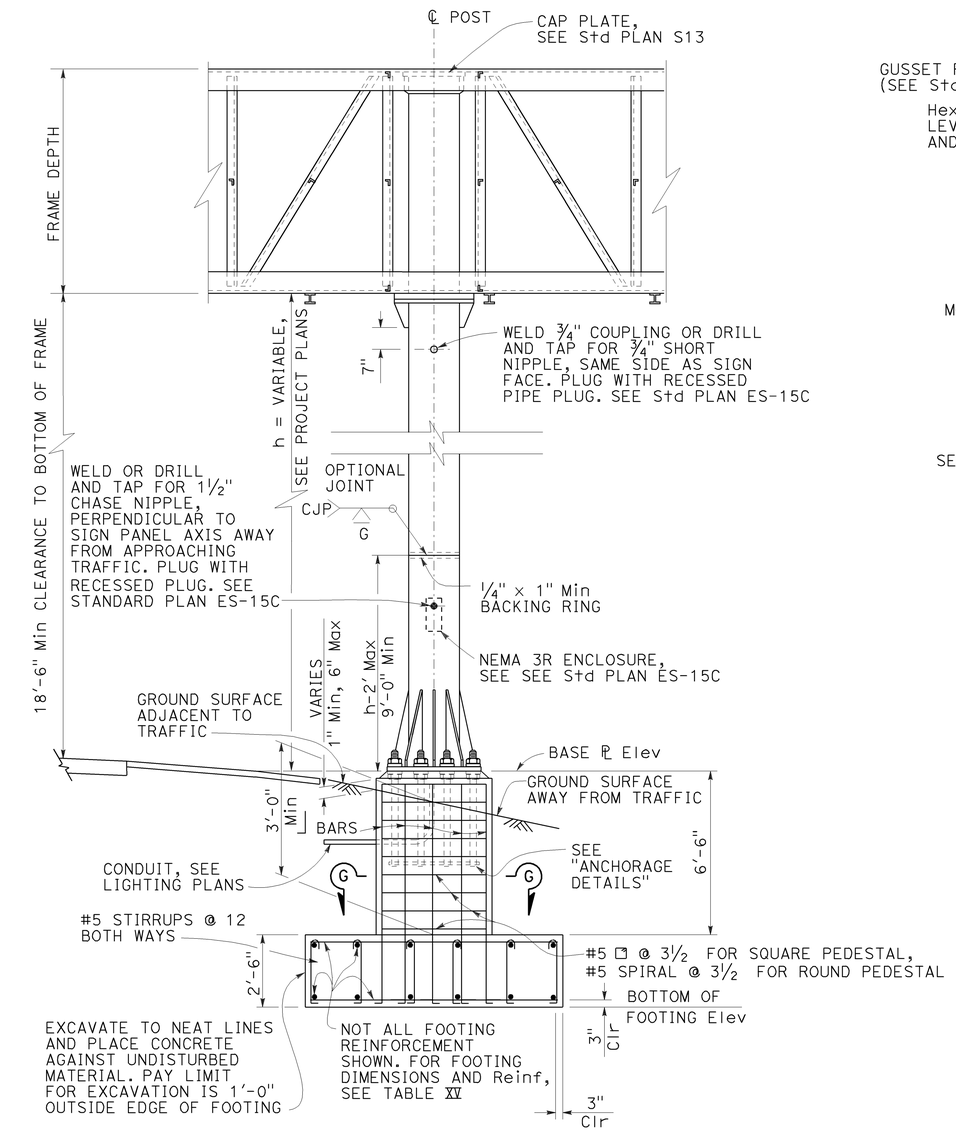

ELEVATION
See Note 5

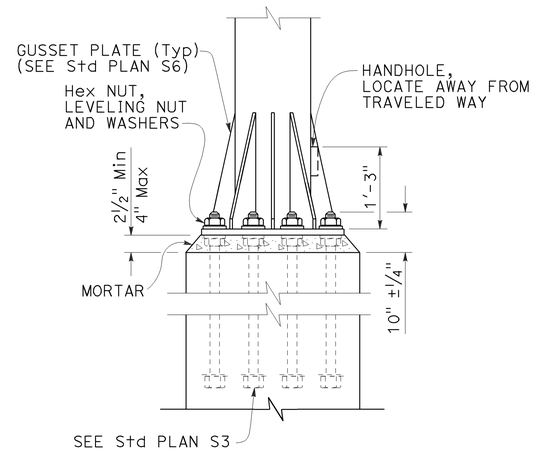

ELEVATION

ANCHORAGE DETAILS

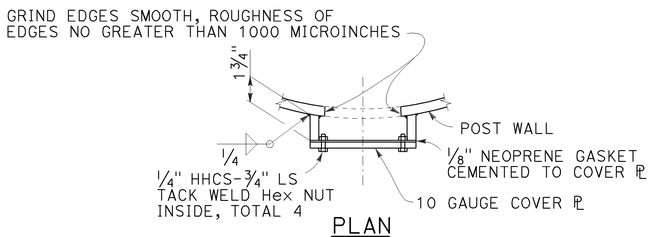

PLAN

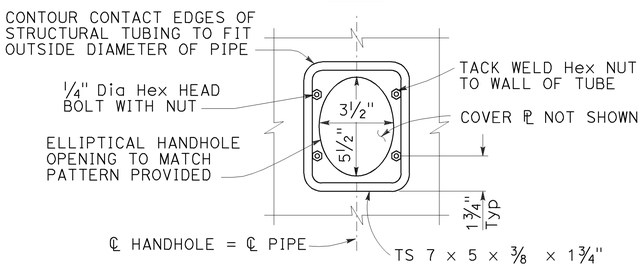

ELEVATION

TYPICAL DETAILS OF HANDHOLE AND COVER

NOTES:

1. For "General Notes", see Revised Standard Plan RSP S1.
2. Longer side of footing (longitudinal) shall be normal to axis of sign.
3. Backfill shall be in place prior to erection of post.
4. Thread upper 10" of anchor bolts and galvanize upper 1'-0".
5. Spread footing with square pedestal foundation shown, use Pile Foundation when shown on the Project Plans. For pile foundation details, see Standard Plan S8.
6. Anchor plates may be retained with hexagon nut or formed head as alternatives to details shown.
7. On single post sign structures, the post shall be raked out of plumb, with the use of the leveling nuts to make the bottom of the sign frame level.
8. At final position of post all top and bottom nuts shall be tightened against base plate.
9. When foundation is located on a steep slope with exposed face of concrete adjacent to traffic, see "Detail C" on Standard Plan S8, as applicable.
10. Slope protection required when indicated on the Project Plans.

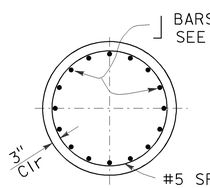

SECTION G-G
ROUND PEDESTAL

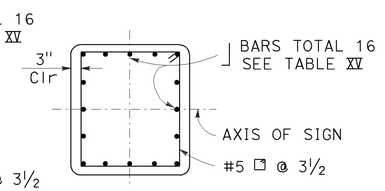

SECTION G-G
SQUARE PEDESTAL

STATE OF CALIFORNIA
DEPARTMENT OF TRANSPORTATION

OVERHEAD SIGNS-TRUSS SINGLE POST TYPE POST TYPES II THROUGH IX

NO SCALE

RSP S2 DATED JULY 19, 2013 SUPERSEDES STANDARD PLAN S2
DATED MAY 20, 2011 - PAGE 335 OF THE STANDARD PLANS BOOK DATED 2010.

REVISED STANDARD PLAN RSP S2

2010 REVISED STANDARD PLAN RSP S2

7-11-13

Dist	COUNTY	ROUTE	POST MILES TOTAL PROJECT	SHEET No.	TOTAL SHEETS
04	Ala	880	2.9/27.3	886	906

REGISTERED CIVIL ENGINEER

July 19, 2013
PLANS APPROVAL DATE

REGISTERED PROFESSIONAL ENGINEER — Stanley P. Johnson — No. C57793 — Exp. 3-31-14 — CIVIL — STATE OF CALIFORNIA

THE STATE OF CALIFORNIA OR ITS OFFICERS OR AGENTS SHALL NOT BE RESPONSIBLE FOR THE ACCURACY OR COMPLETENESS OF SCANNED COPIES OF THIS PLAN SHEET.

TO ACCOMPANY PLANS DATED 6-22-15

NOTES:

1. For "General Notes", see Revised Standard Plan RSP S1.
2. Longer side of post and footing (longitudinal) shall be normal to axis of sign.
3. Backfill shall be in place prior to erection of post.
4. Thread upper 10" of anchor bolts and galvanize upper 1'-0".
5. Spread footing with square pedestal shown, use pile foundation when shown on the Project Plans. For pile foundation details, see Standard Plan S15.
6. Anchor plates may be retained with Hex nut or formed head as an alternative to details shown.
7. When foundation is located on a steep slope with exposed face of concrete adjacent to traffic, see "Detail C" on Standard Plan S15.
8. Slope protection required when indicated on Project Plans.
9. Weld coupling or drill and tap for 1½"C chase nipple, perpendicular to sign panel axis away from approaching traffic. Plug with recessed pipe plug. See Standard Plan ES-15C.
10. Excavate to neat lines and place concrete against undisturbed material.

TABLE XIV

POST TYPE	PIPE			ROUND PEDESTAL					SQUARE PEDESTAL						SPREAD FOOTING					
				PEDESTAL SIZE	VERTICAL ⌋-BARS		SPIRAL		PEDESTAL SIZE	VERTICAL ⌋-BARS			HOOP		(SEE NOTE 2)	REINFORCEMENT				
																WIDTH		LONGITUDINAL		FOOTING STIRRUPS
	NPS	THICKNESS	SPLIT	Dia	EQUALLY SPACED TOTAL	BAR SIZE	BAR SIZE	PITCH	SQUARE	EQUALLY SPACED TOTAL	BAR SIZE	# OF BARS EA FACE	BAR SIZE	SPACING		TOP	BOTTOM	TOP	BOTTOM	
I-S	14	½"	5"	5'-3"	16	#10	#5	3½"	5'-3"	16	#10	5	#5	6"	7'-0" x 13'-0" x 2'-6"	14-#6	14-#7	10-#9	10-#9	#5 @ 12
II-S	16		6"												7'-0" x 13'-0" x 2'-6"	14-#6	14-#7	10-#9	10-#9	
III-S	18		7"												7'-0" x 13'-0" x 2'-6"	14-#6	14-#7	11-#9	11-#9	
IV-S	20		8"												8'-0" x 14'-0 x 2'-6"	15-#7	15-#7	12-#9	12-#11	
V-S	24		8"	5'-9"		#11			5'-9"		#11				8'-0" x 16'-0" x 3'-0"	17-#7	17-#7	12-#9	12-#11	
VI-S	24	31/32''	10"	5'-9"		#11			5'-9"		#11				9'-0" x 17'-0" x 3'-0"	18-#7	18-#7	12-#9	12-#11	
VII-S	24	31/32''	10"	5'-9"		#11			5'-9"		#11				10'-0 x 18'-0" x 3'-0"	19-#7	19-#7	13-#9	13-#11	

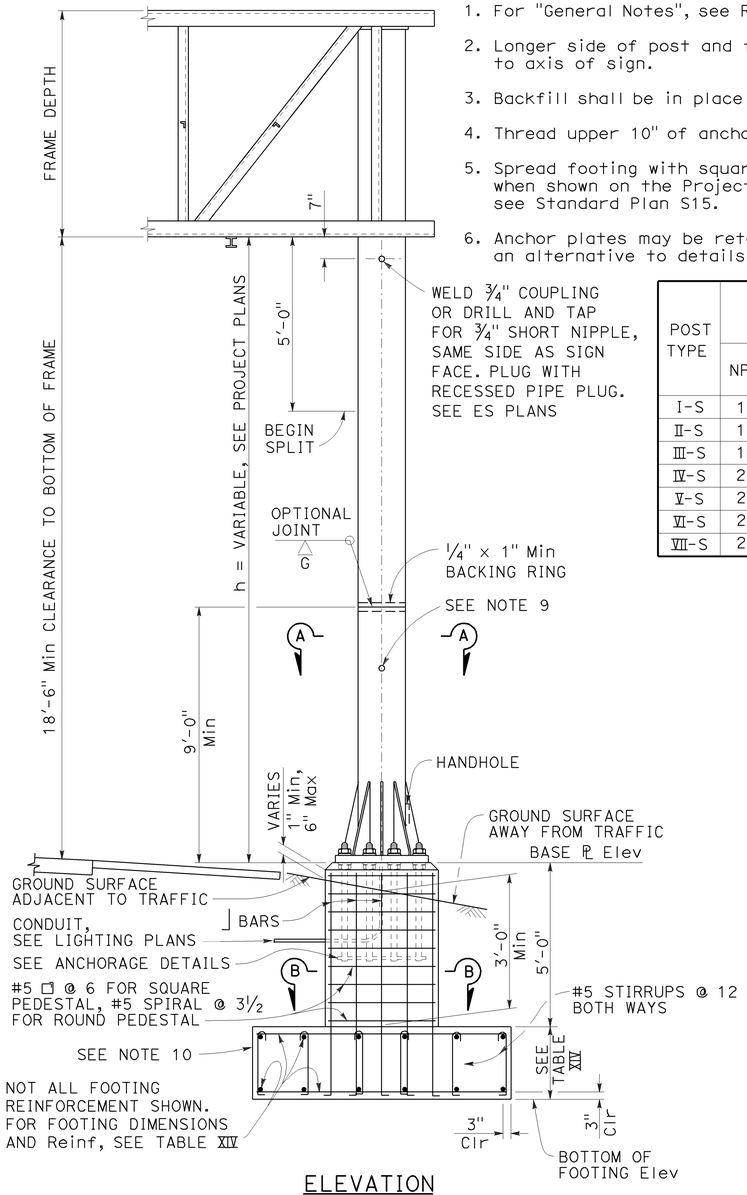

ELEVATION
SEE NOTE 5

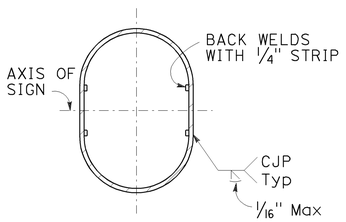

SECTION A-A

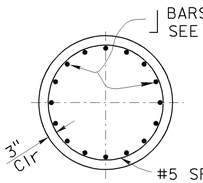

SECTION B-B

ROUND PEDESTAL

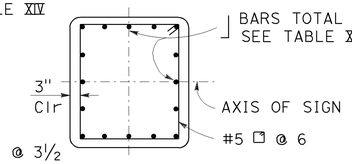

SECTION B-B

SQUARE PEDESTAL

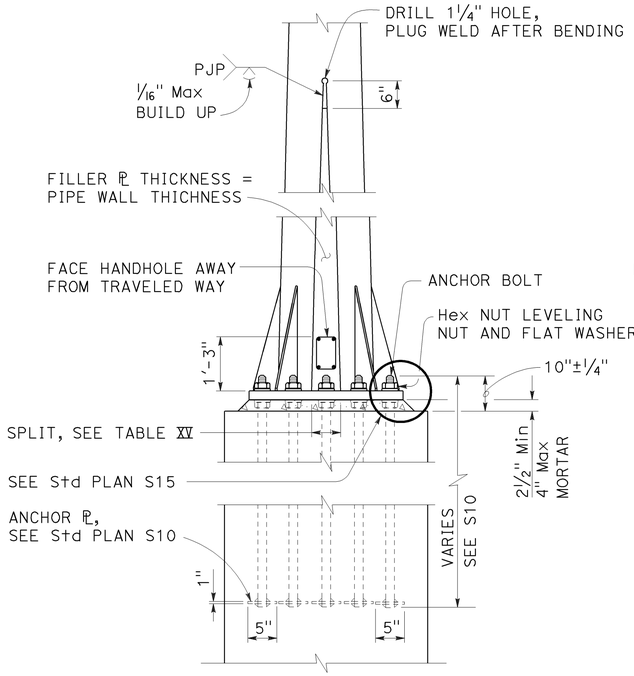

ELEVATION
SIDE VIEW

ANCHORAGE DETAILS

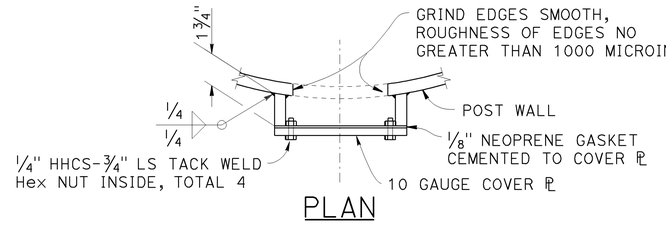

PLAN

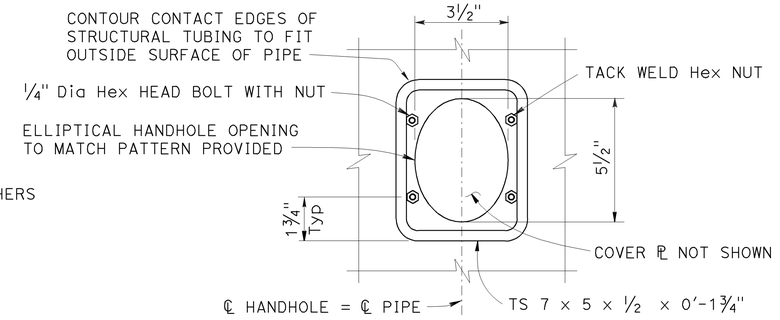

ELEVATION

TYPICAL DETAILS OF HANDHOLE AND COVER

STATE OF CALIFORNIA
DEPARTMENT OF TRANSPORTATION

OVERHEAD SIGNS-TRUSS TWO POST TYPE POST TYPES I-S THROUGH VII-S

NO SCALE

RSP S9 DATED JULY 19, 2013 SUPERSEDES STANDARD PLAN S9
DATED MAY 20, 2011 - PAGE 342 OF THE STANDARD PLANS BOOK DATED 2010.

REVISED STANDARD PLAN RSP S9

2010 REVISED STANDARD PLAN RSP S9

7-11-13

LEGEND:

AB	ABANDON. IF APPLIED TO CONDUIT, REMOVE CONDUCTORS
BC	INSTALL PULL BOX IN EXISTING CONDUIT RUN
BP	PEDESTRIAN BARRICADE, TYPE AS INDICATED ON PLAN
CB	INSTALL CONDUIT INTO EXISTING PULL BOX
CC	CONNECT NEW AND EXISTING CONDUIT. REMOVE EXISTING CONDUCTORS AND INSTALL CONDUCTORS AS INDICATED
CF	CONDUIT TO REMAIN FOR FUTURE USE. REMOVE CONDUCTORS. INSTALL PULL TAPE
DH	DETECTOR HANDHOLE
FA	FOUNDATION TO BE ABANDONED
IS	INSTALL SIGN ON SIGNAL MAST ARM
NS	NO SLIP BASE ON STANDARD
PEC	PHOTOELECTRIC CONTROL
PEU	PHOTOELECTRIC UNIT
RC	EQUIPMENT OR MATERIAL TO BE REMOVED AND BECOME THE PROPERTY OF THE CONTRACTOR
RE	REMOVE ELECTROLIER, FUSES AND BALLAST. TAPE ENDS OF CONDUCTORS
RL	RELOCATE EQUIPMENT
RR	REMOVE AND REUSE EQUIPMENT
RS	REMOVE AND SALVAGE EQUIPMENT
SC	SPLICE NEW TO EXISTING CONDUCTORS
SD	SERVICE DISCONNECT
TSP	TELEPHONE SERVICE POINT

ABBREVIATIONS

APS	ACCESSIBLE PEDESTRIAN SIGNAL
BBS	BATTERY BACKUP SYSTEM
BC	BOLT CIRCLE
BPB	BICYCLE PUSH BUTTON
C	CONDUIT
CB	CIRCUIT BREAKER
CCTV	CLOSED CIRCUIT TELEVISION
Ckt	CIRCUIT
CMS	CHANGEABLE MESSAGE SIGN
Ctid	CALTRANS IDENTIFICATION
Comm	COMMUNICATION
DLC	LOOP DETECTOR LEAD-IN CABLE
EMS	EXTINGUISHABLE MESSAGE SIGN
EVUC	EMERGENCY VEHICLE UNIT CABLE
EVUD	EMERGENCY VEHICLE UNIT DETECTOR
FB	FLASHING BEACON
FBCA	FLASHING BEACON CONTROL ASSEMBLY
FBS	FLASHING BEACON WITH SLIP BASE
FO	FIBER OPTIC
G	EQUIPMENT GROUNDING CONDUCTOR
GB	GROUND BUS
GFCI	GROUND FAULT CIRCUIT INTERRUPTER
HAR	HIGHWAY ADVISORY RADIO
Hex	HEXAGONAL
HPS	HIGH PRESSURE SODIUM
IISNS	INTERNALLY ILLUMINATED STREET NAME SIGN
ISL	INDUCTION SIGN LIGHTING
LED	LIGHT EMITTING DIODE
LMA	LUMINAIRE MAST ARM
LPS	LOW PRESSURE SODIUM
Ltg	LIGHTING
Lum	LUMINAIRE
M	METERED
MAT	MAST ARM MOUNTING TOP ATTACHMENT
MAS	MAST ARM MOUNTING SIDE ATTACHMENT
M/M	MULTIPLE TO MULTIPLE TRANSFORMER
Mtg	MOUNTING
MV	MERCURY VAPOR LIGHTING FIXTURE
MVDS	MICROWAVE VEHICLE DETECTION SYSTEM
N	NEUTRAL (GROUNDED CONDUCTOR)
NB	NEUTRAL BUS
NC	NORMALLY CLOSE
NO	NORMALLY OPEN
P	CIRCUIT BREAKER'S POLE
PB	PULL BOX
PBA	PUSH BUTTON ASSEMBLY
PEC	PHOTOELECTRIC CONTROL
Ped	PEDESTRIAN
PEU	PHOTOELECTRIC UNIT
PT	CONDUIT WITH PULL TAPE
RE	RELOCATED EQUIPMENT
RM	RAMP METERING
RWIS	ROADSIDE WEATHER INFORMATION SYSTEM
SB	SLIP BASE
SIC	SIGNAL INTERCONNECT CABLE
Sig	SIGNAL
SMA	SIGNAL MAST ARM
SNS	STREET NAME SIGN
SP	SERVICE POINT
TDC	TELEPHONE DEMARCATION CABINET
TMS	TRAFFIC MONITORING STATION
TOS	TRAFFIC OPERATIONS SYSTEM
Veh	VEHICLE
VIVDS	VIDEO IMAGE VEHICLE DETECTION SYSTEM
WIM	WEIGH-IN-MOTION
Xfmr	TRANSFORMER

Dist	COUNTY	ROUTE	POST MILES TOTAL PROJECT	SHEET No.	TOTAL SHEETS
04	Ala	880	2.9/27.3	887	906

Theresa Gabriel
REGISTERED ELECTRICAL ENGINEER

Theresa Aziz Gabriel
No. E15129
Exp. 6-30-14
ELECTRICAL
REGISTERED PROFESSIONAL ENGINEER
STATE OF CALIFORNIA

July 19, 2013
PLANS APPROVAL DATE

THE STATE OF CALIFORNIA OR ITS OFFICERS OR AGENTS SHALL NOT BE RESPONSIBLE FOR THE ACCURACY OR COMPLETENESS OF SCANNED COPIES OF THIS PLAN SHEET.

TO ACCOMPANY PLANS DATED 6-22-15

SOFFIT AND WALL MOUNTED LUMINAIRES

- PENDANT, 70 W HPS UNLESS OTHERWISE SPECIFIED
- FLUSH, 70 W HPS UNLESS OTHERWISE SPECIFIED
- WALL SURFACE, 70 W HPS UNLESS OTHERWISE SPECIFIED
- EXISTING SOFFIT OR WALL LUMINAIRE TO REMAIN UNMODIFIED
- (M) EXISTING SOFFIT OR WALL LUMINAIRE TO BE MODIFIED AS SPECIFIED

NOTE:
Arrow indicates "street side" of luminaire.

COMMONLY USED SYMBOLS FOR UNITED STATES CUSTOMARY UNITS OF MEASUREMENT:

SYMBOL USED	DEFINITIONS
Ω	OHMS
min	MINUTE
s	SECOND
bps	BITS PER SECOND
Bps	BYTES PER SECOND
A	AMPERE
V	VOLT
$V_{(dc)}$	VOLT (DIRECT CURRENT)
$V_{(ac)}$	VOLT (ALTERNATING CURRENT)
FC	FOOT - CANDLE
W	WATTS
VA	VOLT-AMPERE
M	MEGA
k	KILO
m	MILLI
μ	MICRO
P	PICO
Hz	HERTZ

MISCELLANEOUS ELECTROLIERS

NEW	EXISTING	
		LUMINAIRE ON WOOD POLE
		NON-STANDARD ELECTROLIER (SEE PROJECT NOTES OR PROJECT PLANS)
		CITY ELECTROLIER
		ELECTROLIER FOUNDATION (FUTURE INSTALLATION)

NOTES:

1. HPS luminaires shall be 310 W HPS when installed on Type 21, 21D, 30, 31 and 32 Standards, unless otherwise specified. HPS luminaires shall be 200 W when installed on other type standards or poles, unless otherwise specified.
2. LED luminaires shall be 235 W when installed on Type 21, 21D, 30, 31 and 32 Standards, unless otherwise specified. LED luminaires shall be 165 W when installed on other type standards or poles, unless otherwise specified.
3. Luminaires shall be the cutoff type, ANSI Type III medium cutoff lighting distribution, unless otherwise specified.

STANDARD ELECTROLIER

NEW	EXISTING	STANDARD TYPE
		15
		15D
		15 STRUCTURE
		15D STRUCTURE
		21
		21D
		21 STRUCTURE
		21D STRUCTURE
		30
		31
		32

STATE OF CALIFORNIA
DEPARTMENT OF TRANSPORTATION

ELECTRICAL SYSTEMS (LEGEND AND ABBREVIATIONS)

NO SCALE

RSP ES-1A DATED JULY 19, 2013 SUPERSEDES STANDARD PLAN ES-1A DATED MAY 20, 2011 - PAGE 425 OF THE STANDARD PLANS BOOK DATED 2010.

REVISED STANDARD PLAN RSP ES-1A

2010 REVISED STANDARD PLAN RSP ES-1A

7-15-13

Dist	COUNTY	ROUTE	POST MILES TOTAL PROJECT	SHEET No.	TOTAL SHEETS
04	Ala	880	2.9/27.3	888	906

Theresa Gabriel
REGISTERED ELECTRICAL ENGINEER

Theresa Aziz Gabriel No. E15129 Exp. 6-30-14 ELECTRICAL — REGISTERED PROFESSIONAL ENGINEER — STATE OF CALIFORNIA

July 19, 2013
PLANS APPROVAL DATE

THE STATE OF CALIFORNIA OR ITS OFFICERS OR AGENTS SHALL NOT BE RESPONSIBLE FOR THE ACCURACY OR COMPLETENESS OF SCANNED COPIES OF THIS PLAN SHEET.

TO ACCOMPANY PLANS DATED 6-22-15

CONDUIT

NEW	EXISTING	
		LIGHTING CONDUIT, UNLESS OTHERWISE INDICATED OR NOTED
		TRAFFIC SIGNAL CONDUIT
C	c	COMMUNICATION CONDUIT
T	t	TELEPHONE CONDUIT
F	f	FIRE ALARM CONDUIT
FO	fo	FIBER OPTIC CONDUIT
		CONDUIT TERMINATION
R	r	CONDUIT RISER ATTACHED TO THE STRUCTURE OR SERVICE POLE

SERVICE EQUIPMENT

NEW	EXISTING	
OH	oh	OVERHEAD LINES
U	U	WOOD POLE, "U" INDICATES UTILITY OWNED
		POLE GUY WITH ANCHOR
		UTILITY TRANSFORMER - GROUND MOUNTED
III	III	SERVICE EQUIPMENT ENCLOSURE TYPE. DOOR INDICATES FRONT OF ENCLOSURE
T	t	TELEPHONE DEMARCATION CABINET

POLE-MOUNTED SERVICE DESIGNATION

TYPE H SERVICE, 28'-10" — TYPE OF INSTALLATION AND POLE HEIGHT ABOVE GRADE

FLASHING BEACON

NEW	EXISTING	
R	R	FLASHING BEACON (ONE VEHICLE SIGNAL HEAD WITH BACKPLATE AND VISOR) "R" INDICATES RED INDICATION, "Y" INDICATES YELLOW INDICATION
Y Y	Y Y	FLASHING BEACON WITH TYPE 15-FBS STANDARD AND A SIGN.
R R	R R	FLASHING BEACON WITH TYPES 9, 9A OR 9B SIGN UNLESS OTHERWISE SPECIFIED OR INDICATED

SIGNAL EQUIPMENT

NEW	EXISTING	
C	C	PEDESTRIAN SIGNAL HEAD "C" INDICATES COUNTDOWN PEDESTRIAN HEAD
		PUSH BUTTON ASSEMBLY POST
		PEDESTRIAN BARRICADE
		VEHICLE SIGNAL HEAD (WITH BACKPLATE AND 3-SECTIONS: RED, YELLOW AND GREEN)
		VEHICLE SIGNAL HEAD WITH ANGLE VISOR
PV	PV	MODIFICATIONS OF BASIC SYMBOL: "L" INDICATES ALL NON-ARROW SECTIONS LOUVERED "LG" INDICATES LOUVERED GREEN SECTION ONLY "PV" INDICATES ALL 12" SECTIONS PROGRAMMED VISIBILITY "8" INDICATES ALL 8" SECTIONS (ONLY WHEN SPECIFIED)
		VEHICLE SIGNAL HEAD CONSISTING OF RED, YELLOW AND GREEN LEFT ARROW SECTIONS
		VEHICLE SIGNAL HEAD CONSISTING OF RED AND YELLOW SECTIONS WITH AN UP GREEN ARROW SECTION
		VEHICLE SIGNAL HEAD (5 SECTION) CONSISTING OF RED, YELLOW AND GREEN SECTIONS WITH YELLOW AND GREEN RIGHT ARROW SECTIONS
		TYPE 15TS STANDARD WITH VEHICLE SIGNAL HEAD AND LUMINAIRE
		TYPE 21TS STANDARD WITH VEHICLE SIGNAL HEAD AND LUMINAIRE
		STANDARD WITH LUMINAIRE AND SIGNAL MAST ARMS AND ATTACHED VEHICLE SIGNAL HEADS
		TYPE 1 STANDARD WITH ATTACHED VEHICLE SIGNAL HEADS
		STANDARD WITH A SIGNAL MAST ARM, ATTACHED VEHICLE SIGNAL HEADS AND INTERNALLY ILLUMINATED STREET NAME SIGN
		CONTROLLER ASSEMBLY. DOOR INDICATES FRONT OF CABINET

SIGNAL EQUIPMENT Cont

NEW	EXISTING	
		GUARD POST
		TYPE 1 STANDARD WITH RAMP METERING SIGN
		OPTICAL DETECTOR FOR THE EMERGENCY VEHICLE DETECTION SYSTEM

NOTES:

1. All signal sections shall be 12" unless shown otherwise.
2. Signal heads shall be provided with backplates unless shown otherwise.

ILLUMINATED OVERHEAD SIGN

NEW	EXISTING	
		SINGLE POST, SINGLE ILLUMINATED SIGN, BALANCED BUTTERFLY
		SINGLE POST, DOUBLE ILLUMINATED SIGN, BALANCED BUTTERFLY
		SINGLE POST, SINGLE ILLUMINATED SIGN, FULL CANTILEVER
		DOUBLE POST, SINGLE ILLUMINATED SIGN
		SINGLE ILLUMINATED SIGN MOUNTED ON STRUCTURE
		DOUBLE POST, SINGLE ILLUMINATED SIGN WITH ELECTROLIER

STATE OF CALIFORNIA
DEPARTMENT OF TRANSPORTATION

ELECTRICAL SYSTEMS (LEGEND AND ABBREVIATIONS)

NO SCALE

RSP ES-1B DATED JULY 19, 2013 SUPERSEDES STANDARD PLAN ES-1B DATED MAY 20, 2011 - PAGE 426 OF THE STANDARD PLANS BOOK DATED 2010.

REVISED STANDARD PLAN RSP ES-1B

2010 REVISED STANDARD PLAN RSP ES-1B

7-15-13

Dist	COUNTY	ROUTE	POST MILES TOTAL PROJECT	SHEET No.	TOTAL SHEETS
04	Ala	880	2.9/27.3	889	906

Theresa Gabriel
REGISTERED ELECTRICAL ENGINEER

July 19, 2013
PLANS APPROVAL DATE

Theresa Aziz Gabriel No. E15129 Exp. 6-30-14 ELECTRICAL — REGISTERED PROFESSIONAL ENGINEER — STATE OF CALIFORNIA

THE STATE OF CALIFORNIA OR ITS OFFICERS OR AGENTS SHALL NOT BE RESPONSIBLE FOR THE ACCURACY OR COMPLETENESS OF SCANNED COPIES OF THIS PLAN SHEET.

TO ACCOMPANY PLANS DATED 6-22-15

EQUIPMENT IDENTIFICATION

ILLUMINATED SIGN IDENTIFICATION NUMBER:

SIGN No. 12345 — SIGN NUMBER - PLACE ON POST OR STRUCTURE

10 ISL SCI 1.0
- 1.0 — TRANSFORMER RATING (kVA)
- SCI — LIGHTING CONTROL TYPE
- ISL — NUMBER AND TYPE OF FIXTURES

DO NOT PLACE ON STANDARD OR STRUCTURE

ELECTROLIER OR EQUIPMENT IDENTIFICATION NUMBER:

12345 - 15'-0"
- 15'-0" — MAST ARM LENGTH, IF SHOWN. DO NOT PLACE ON STANDARD OR STRUCTURE
- 12345 — EQUIPMENT NUMBER - PLACE ON STANDARD OR STRUCTURE. EXISTING EQUIPMENT NUMBERS ARE SHOWN IN PARENTHESIS

CONDUIT AND CONDUCTOR IDENTIFICATION:

1½"C, 2#10, 15#14, 2 DLC, 12P#18
- PAIR
- 2#10, 15#14, 2 DLC, 12P#18 — NUMBER AND SIZE OF CONDUCTORS AND CABLES
- 1½"C — SIZE OF CONDUIT IN INCHES

ø1, ø2, ø2P, etc. — TRAFFIC PHASE IDENTIFICATION FOR SIGNAL FACES, DETECTORS AND PHASE DIAGRAMS

[1] [2] [3] — LEGEND NUMBERS

(A) (B) (C) — EQUIPMENT, SIGNAL POLES, INSTALLATION OR ITEMS

1 2 3 — CONDUIT RUN NUMBERS

SIGNAL AND LIGHTING STANDARD (TYPICAL DESIGNATION):

19A - 3 - 100
- 100 — WIND VELOCITY = 100 mph
- 3 — CASE 3 ARM LOADING
- 19A — STANDARD TYPE
- STANDARD PLAN SHEET NUMBER
- DETAIL, NUMBER, SECTION, TYPE OR ELEVATION

MISCELLANEOUS EQUIPMENT

NEW	EXISTING	
CMS	cms	CHANGEABLE MESSAGE SIGN
		CLOSED CIRCUIT TELEVISION CAMERA
		HIGHWAY ADVISORY RADIO POLE AND ANTENNA
EMS	ems	EXTINGUISHABLE MESSAGE SIGN
M V	m v	DETECTION DEVICE M = MICROWAVE SENSOR V = VIDEO IMAGE SENSOR

WIRING DIAGRAM LEGEND

- EXTERNAL CONDUCTOR
- CONDUCTOR OR BUS
- TIE POINT
- CONTACTOR COIL
- CONTACTOR, NO CONTACT
- TERMINAL BLOCKS
- CONTACTOR, NC CONTACT
- ENCLOSURE BOND
- GROUNDING ELECTRODE
- CIRCUIT BREAKER
- RECEPTACLE

PULL BOXES

NEW	EXISTING	
		PULL BOX, No. 5 UNLESS OTHERWISE INDICATED OR NOTED
3	9A(21)	PULL BOX, ADDITIONAL DESIGNATIONS OR DESCRIPTIONS

3 No. 3½ PULL BOX
5 No. 5 PULL BOX
6 No. 6 PULL BOX
7 No. 7 (CEILING PULL BOX)
8 No. 8 (PENDANT SOFFIT PULL BOX)
9 No. 9 PULL BOX
9A No. 9A PULL BOX

(C) COMMUNICATIONS PULL BOX
(E) PULL BOX WITH EXTENSION
(S) SPRINKLER CONTROL PULL BOX
(21) ANCHOR BOLTS AND CONDUIT FOR FUTURE INSTALLATION OF TYPE 21 STANDARD
(T) TRAFFIC PULL BOX

VEHICLE DETECTORS

5 J 9 U
- VEHICLE DETECTOR DESIGNATION
- U = UPPER, L = LOWER
- SLOT NUMBER IN INPUT FILE
- INPUT FILE (I OR J)
- PHASE

NEW	EXISTING	
		TYPE A DETECTOR LOOP. OUTLINE OF SAWCUT SHOWN
		TYPE B DETECTOR LOOP. OUTLINE OF SAWCUT SHOWN
		TYPE C DETECTOR LOOP. OUTLINE OF SAWCUT SHOWN
		TYPE D DETECTOR LOOP. OUTLINE OF SAWCUT SHOWN
		TYPE E DETECTOR LOOP. OUTLINE OF SAWCUT SHOWN
		TYPE Q DETECTOR LOOP. OUTLINE OF SAWCUT SHOWN
		MAGNETIC DETECTOR
DH	dh	DETECTOR HANDHOLE
		MICROWAVE OR VIDEO DETECTION ZONE

STATE OF CALIFORNIA
DEPARTMENT OF TRANSPORTATION

ELECTRICAL SYSTEMS (LEGEND AND ABBREVIATIONS)

NO SCALE

RSP ES-1C DATED JULY 19, 2013 SUPERSEDES STANDARD PLAN ES-1C DATED MAY 20, 2011 - PAGE 427 OF THE STANDARD PLANS BOOK DATED 2010.

REVISED STANDARD PLAN RSP ES-1C

2010 REVISED STANDARD PLAN RSP ES-1C

7-11-13

Dist	COUNTY	ROUTE	POST MILES TOTAL PROJECT	SHEET No.	TOTAL SHEETS
04	Ala	880	2.9/27.3	890	906

Theresa Gabriel
REGISTERED ELECTRICAL ENGINEER

July 19, 2013
PLANS APPROVAL DATE

Theresa Aziz Gabriel
No. E15129
Exp. 6-30-14
ELECTRICAL
REGISTERED PROFESSIONAL ENGINEER
STATE OF CALIFORNIA

THE STATE OF CALIFORNIA OR ITS OFFICERS OR AGENTS SHALL NOT BE RESPONSIBLE FOR THE ACCURACY OR COMPLETENESS OF SCANNED COPIES OF THIS PLAN SHEET.

TO ACCOMPANY PLANS DATED 6-22-15

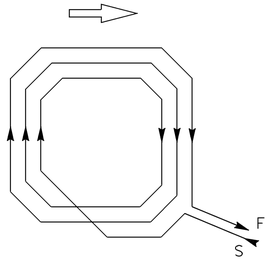

WINDING DETAIL

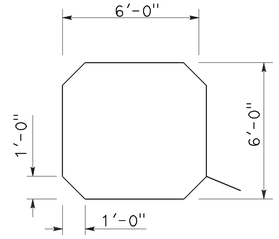

SAWCUT DETAIL

TYPE A LOOP DETECTOR CONFIGURATION

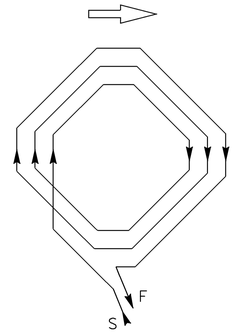

WINDING DETAIL

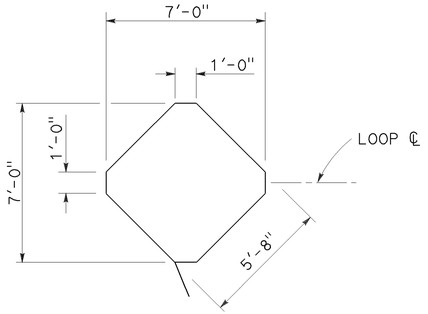

SAWCUT DETAIL

TYPE B LOOP DETECTOR CONFIGURATION

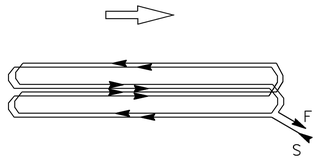

WINDING DETAIL

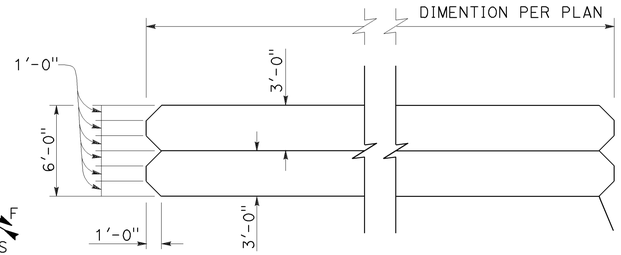

SAWCUT DETAIL

TYPE C LOOP DETECTOR CONFIGURATION

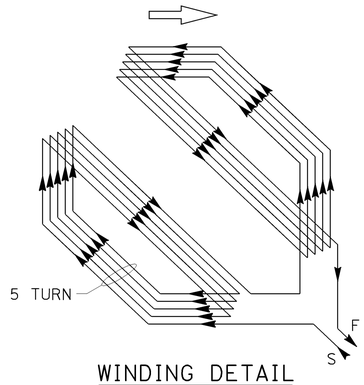

WINDING DETAIL

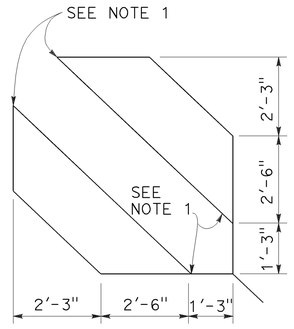

SAWCUT DETAIL

TYPE D LOOP DETECTOR CONFIGURATION

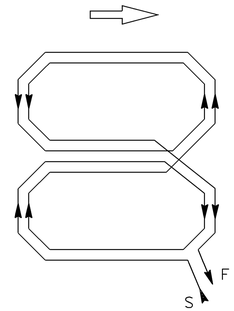

WINDING DETAIL

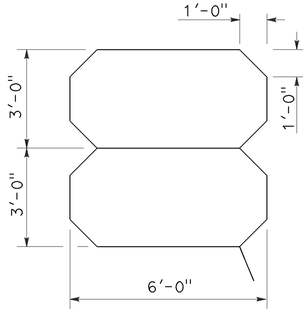

SAWCUT DETAIL

TYPE Q LOOP DETECTOR CONFIGURATION

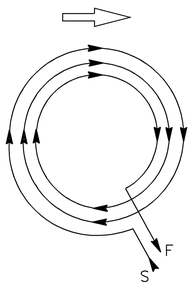

WINDING DETAIL

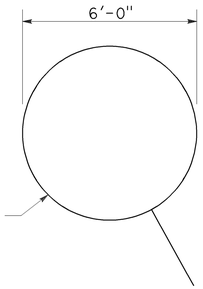

SAWCUT DETAIL

TYPE E LOOP DETECTOR CONFIGURATION

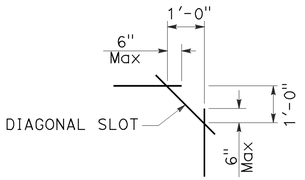

PLAN VIEW OF DIAGONAL SLOT AT CORNERS

NOTES:

1. Round corners of acute angle sawcuts to prevent damage to conductors.
2. Typical distance separating loops from edge to edge is 10' for Type A, B, D and E installation in single lane.

STATE OF CALIFORNIA
DEPARTMENT OF TRANSPORTATION

ELECTRICAL SYSTEMS (DETECTORS)

NO SCALE

RSP ES-5B DATED JULY 19, 2013 SUPERSEDES STANDARD PLAN ES-5B DATED MAY 20, 2011 - PAGE 449 OF THE STANDARD PLANS BOOK DATED 2010.

REVISED STANDARD PLAN RSP ES-5B

2010 REVISED STANDARD PLAN RSP ES-5B

7-9-13

Dist	COUNTY	ROUTE	POST MILES TOTAL PROJECT	SHEET No.	TOTAL SHEETS
04	Ala	880	2.9/27.3	891	906

Theresa Gabriel
REGISTERED ELECTRICAL ENGINEER

Theresa Aziz Gabriel
No. E15129
Exp. 6-30-14
ELECTRICAL
REGISTERED PROFESSIONAL ENGINEER
STATE OF CALIFORNIA

July 19, 2013
PLANS APPROVAL DATE

THE STATE OF CALIFORNIA OR ITS OFFICERS OR AGENTS SHALL NOT BE RESPONSIBLE FOR THE ACCURACY OR COMPLETENESS OF SCANNED COPIES OF THIS PLAN SHEET.

TO ACCOMPANY PLANS DATED 6-22-15

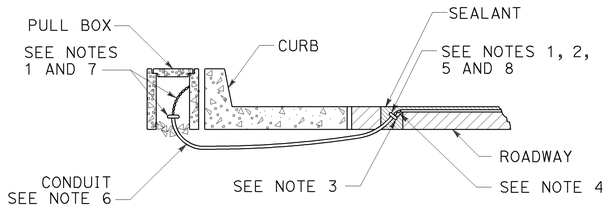

TYPE A
CURB TERMINATION DETAIL

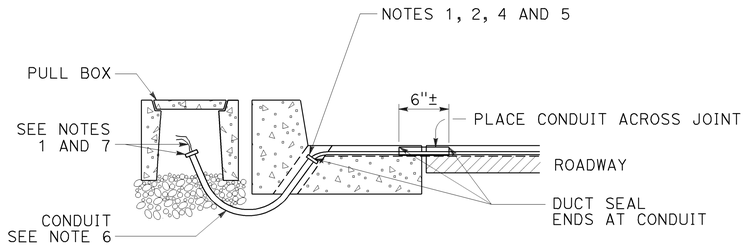

CROSS SECTION

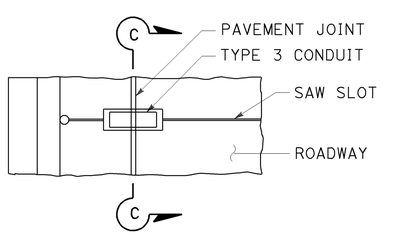

PLAN VIEW

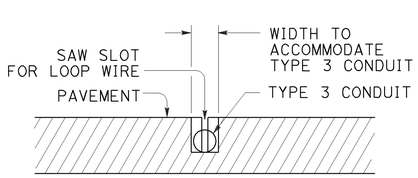

SECTION C-C

TYPE B
CURB TERMINATION DETAIL

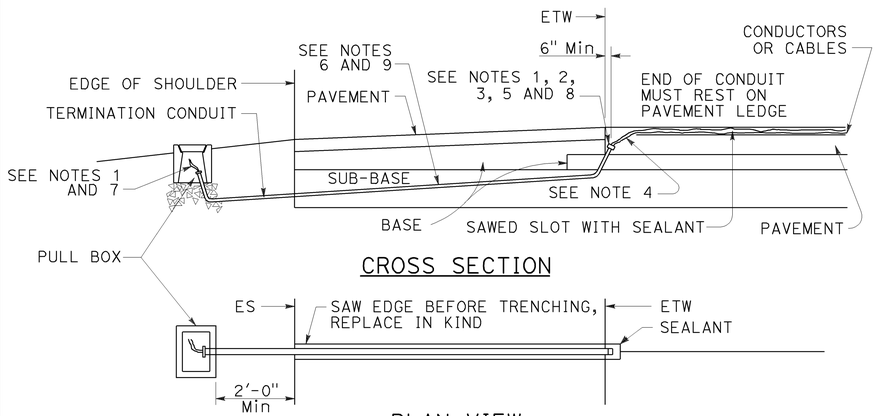

CROSS SECTION

PLAN VIEW

SHOULDER TERMINATION DETAILS

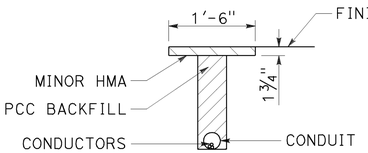

"T" TRENCH DETAIL T

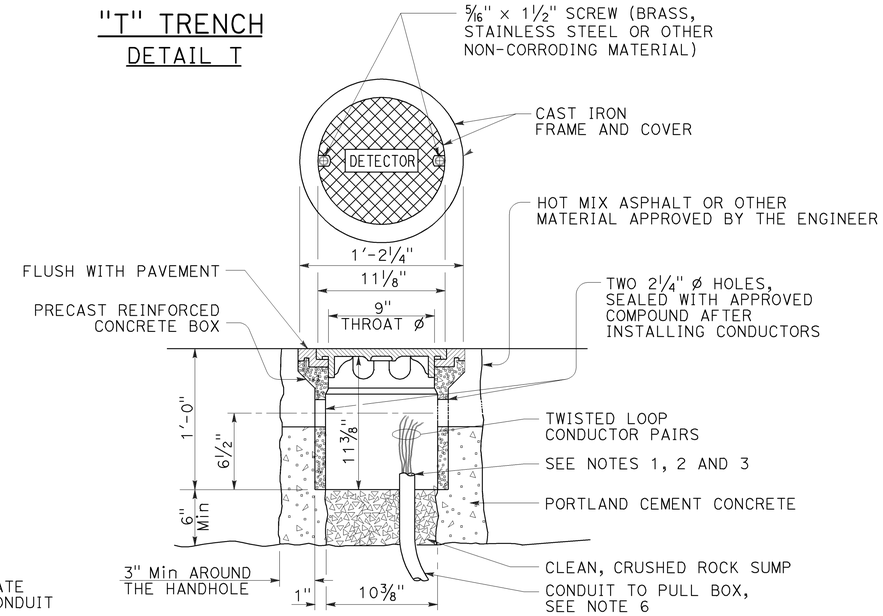

DETECTOR HANDHOLE DETAIL

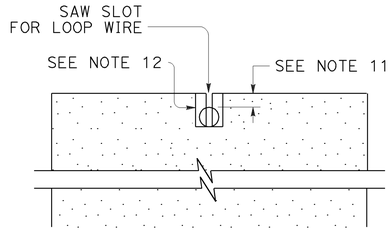

SECTION A-A

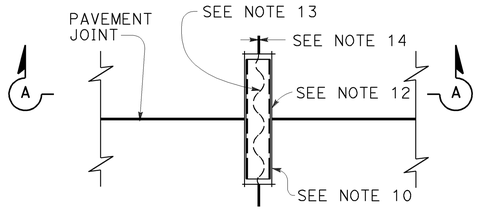

PLAN VIEW

TYPICAL LOOP LEAD-IN DETAIL AT PAVEMENT JOINT

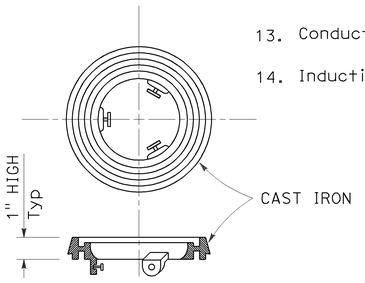

LOCKING GRADE RING

NOTES:

1. Bushing shall be used at end of conduit.
2. Tape detector conductors or cables 3" each side of bushings.
3. Install duct seal compound to each end of termination conduit before installing sealant.
4. Round all sharp edges where detector conductors or cables have to pass.
5. End of conduit shall be 3⅛" below roadway surface.
6.

Conduit size	Loop conductors
1"C minimum	1 to 2 pairs
1½"C minimum	3 to 4 pairs
2"C minimum	5 or more pairs

7. Splice detector conductors or cables to detector lead-in-cable.
8. Location of detector handhole when shown on plans.
9. When the shoulder and traveled way are paved with the same material and there is no joint between them, the conduit shall extend only 2'-0" into the shoulder pavement.
10. ¾"C, Type 3 conduit 6" long minimum, plug both ends with duct compound to keep out sealant.
11. ½" Minimum between top of conduit and pavement surface.
12. Sawcut shall not exceed 1" in width and ⅛" longer than conduit to be installed.
13. Conductors with ½" minimum slack inside conduit.
14. Inductive loop detector saw slot.

STATE OF CALIFORNIA
DEPARTMENT OF TRANSPORTATION

ELECTRICAL SYSTEMS (CURB TERMINATION AND HANDHOLE)

NO SCALE

RSP ES-5D DATED JULY 19, 2013 SUPERSEDES STANDARD PLAN ES-5D
DATED MAY 20, 2011 - PAGE 451 OF THE STANDARD PLANS BOOK DATED 2010.

REVISED STANDARD PLAN RSP ES-5D

2010 REVISED STANDARD PLAN RSP ES-5D

7-9-13

Dist	COUNTY	ROUTE	POST MILES TOTAL PROJECT	SHEET No.	TOTAL SHEETS
04	Ala	880	2.9/27.3	892	906

REGISTERED CIVIL ENGINEER

July 19, 2013
PLANS APPROVAL DATE

Stanley P. Johnson
No. C57793
Exp. 3-31-14
CIVIL
REGISTERED PROFESSIONAL ENGINEER
STATE OF CALIFORNIA

THE STATE OF CALIFORNIA OR ITS OFFICERS OR AGENTS SHALL NOT BE RESPONSIBLE FOR THE ACCURACY OR COMPLETENESS OF SCANNED COPIES OF THIS PLAN SHEET.

TO ACCOMPANY PLANS DATED 6-22-15

NOTE:
Handhole shall be located on the downstream side of traffic.

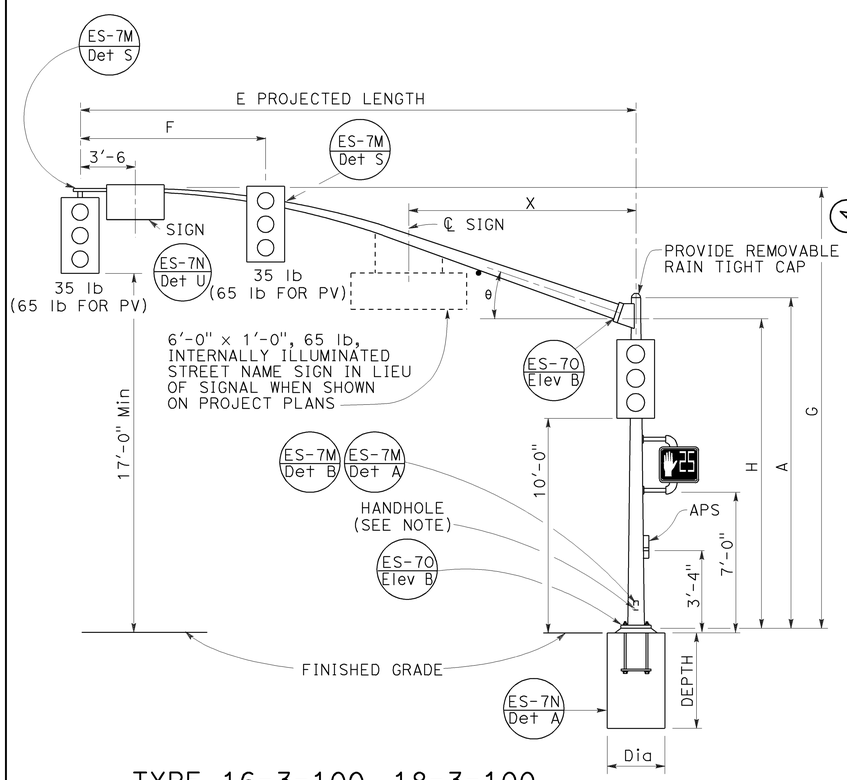

TYPE 16-3-100, 18-3-100,
23-3-100, 27-3-100
ELEVATION A

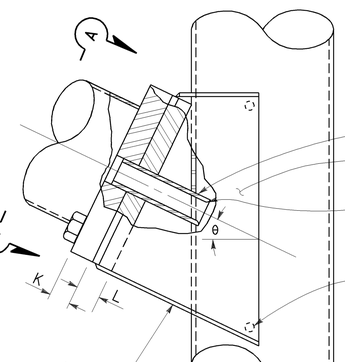

ELEVATION C

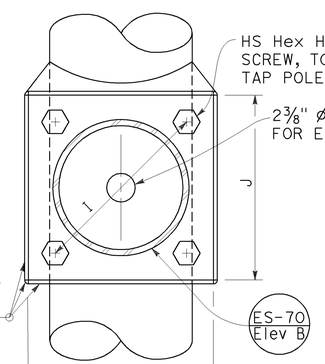

VIEW A-A

SIGNAL MAST ARM CONNECTION
DETAIL A

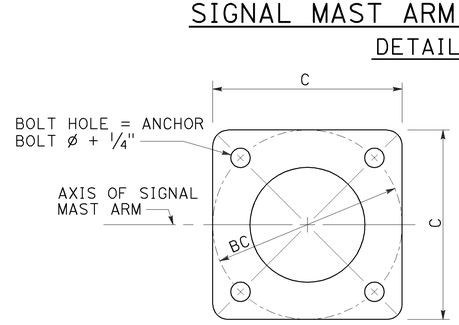

BASE PLATE
DETAIL B

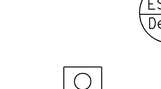

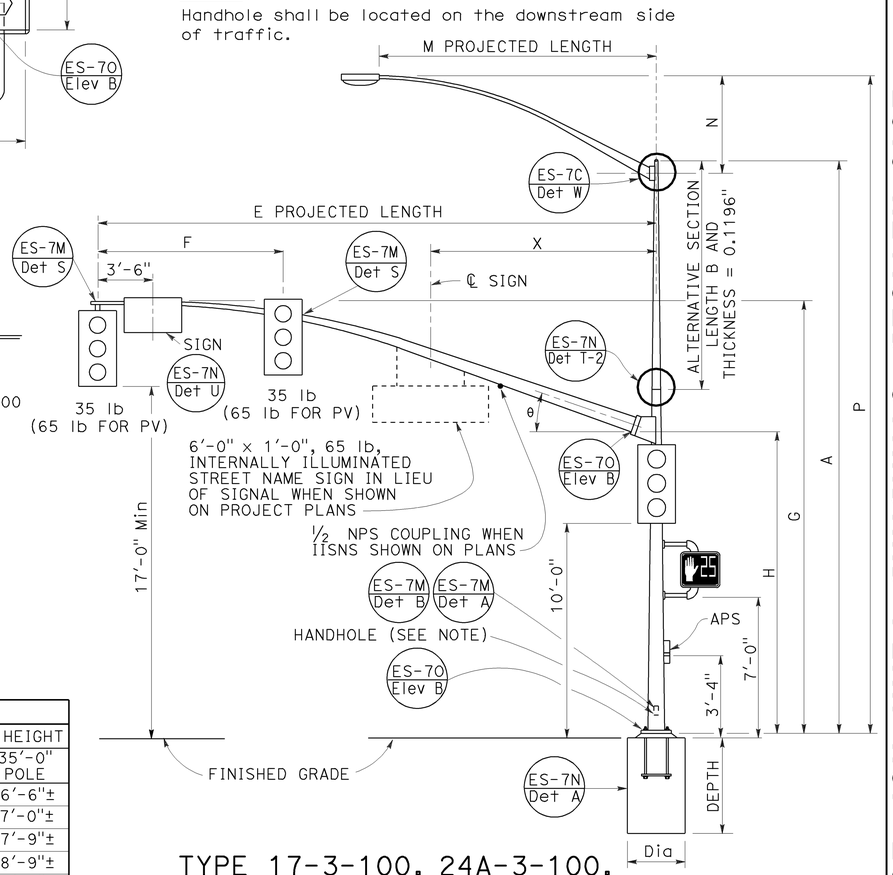

TYPE 17-3-100, 24A-3-100,
19-3-100, 26-3-100,
19A-3-100, 26A-3-100, 24-3-100
ELEVATION B

SIGNAL MAST ARM DATA

E PROJECTED LENGTH	F Min SPACING	G MOUNTING HEIGHT	H	Min OD AT POLE	THICKNESS	I BOLT CIRCLE	HS CAP SCREWS	J PLATE SIZE	K MAST ARM ℙ THICKNESS	L POLE ℙ THICKNESS	θ	X Max
15'-0"	8'-0"	21'-8"±	17'-6"	7⅜"	0.1793"	12"	1¼"-7NC-3"	1'-0"	1¼"	1½"	23°	-
20'-0"		21'-8"±		7⅜"								
25'-0"	12'-0"	22'-8"±		7⅜"								10'-6"
30'-0"				8"								
35'-0"	14'-0"	23'-0"±	16'-0"	8¾"	0.2391"	13"		1'-1"	1½"	1¾"	21°	
40'-0"	15'-0"			9⅜"							15°	13'-0"
45'-0"		23'-8"±		10¹⁄₁₆"								

LUMINAIRE MAST ARM DATA

M PROJECTED LENGTH	N RISE	Min OD AT POLE	THICKNESS	P MOUNTING HEIGHT	
				30'-0" POLE	35'-0" POLE
6'-0"	2'-0"±	3¼"	0.1196"	31'-6"±	36'-6"±
8'-0"	2'-6"±	3½"		32'-0"±	37'-0"±
10'-0"	3'-3"±	3⅞"		32'-9"±	37'-9"±
12'-0"	4'-3"±			33'-9"±	38'-9"±
15'-0"	4'-9"±	4¼"		34'-3"±	39'-3"±

POLE DATA / BASE PLATE DATA / CIDH PILE FOUNDATION

POLE TYPE	LOAD CASE	WIND VELOCITY (mph)	A HEIGHT	Min OD BASE	Min OD TOP	THICKNESS	ALTERNATIVE SECTION B LENGTH	ALTERNATIVE SECTION BOTTOM	ALTERNATIVE SECTION TOP	C	BC = BOLT CIRCLE	THICKNESS	ANCHOR BOLT SIZE	LUMINAIRE MAST ARM	SIGNAL MAST ARM	CIDH PILE FOUNDATION DIAMETER	CIDH PILE FOUNDATION DEPTH	CIDH PILE FOUNDATION REINFORCED
16-3-100	3	100	18'-6"	1'-0"	8¹⁄₁₆"	0.1793"	NONE			1'-5½"	1'-5½"	3"	1½" ø x 42"	NONE	15'-0", 20'-0"	3'-0"	8'-6"	YES
17-3-100			30'-0"	10¾"	6⅞"		10'-0"	7⅞"	6⅞"					6'-15' 12'-0"				
18-3-100			17'-0"	1'-0"	8⅝"	0.2391"	NONE			1'-7"			2" ø x 42"	NONE	25'-0", 30'-0"		9'-6"	
19-3-100			30'-0"		7¹¹⁄₁₆"		10'-0"	9⅛"	7¹¹⁄₁₆"					6'-15' 12'-0"				
19A-3-100			35'-0"		6¹⁵⁄₁₆"		15'-0"		6¹⁵⁄₁₆"					6'-15' 15'-0"			11'-0"	
23-3-100			17'-0"		9⅜"		NONE							NONE	35'-0"			
24-3-100			30'-0"		7¹¹⁄₁₆"		10'-0"	9⅛"	7¹¹⁄₁₆"					6'-15' 12'-0"				
24A-3-100			35'-0"		6¹⁵⁄₁₆"		15'-0"		6¹⁵⁄₁₆"					6'-15' 15'-0"				
26-3-100			30'-0"	1'-2"	7¹³⁄₁₆"	0.3125"	10'-0"	9¼"	7¹³⁄₁₆"	1'-11"	1'-9"		2½" ø x 42"	6'-15' 12'-0"	40'-0", 45'-0"	3'-6"	12'-0"	
26A-3-100			35'-0"		7¹⁄₁₆"		15'-0"		7¹⁄₁₆"					6'-15' 15'-0"				
27-3-100			17'-0"		9¹¹⁄₁₆"		NONE							NONE				

☐ INDICATES MAST ARM LENGTH TO BE USED UNLESS OTHERWISE NOTED ON PLANS.

STATE OF CALIFORNIA
DEPARTMENT OF TRANSPORTATION

ELECTRICAL SYSTEMS (SIGNAL AND LIGHTING STANDARD, CASE 3 SIGNAL MAST ARM LOADING, WIND VELOCITY=100 MPH AND SIGNAL MAST ARM LENGTHS 15' TO 45')

NO SCALE

RSP 7E DATED JULY 19, 2013 SUPERSEDES STANDARD PLAN 7E
DATED MAY 20, 2011 - PAGE 466 OF THE STANDARD PLANS BOOK DATED 2010.

REVISED STANDARD PLAN RSP ES-7E

2010 REVISED STANDARD PLAN RSP ES-7E

6-17-13

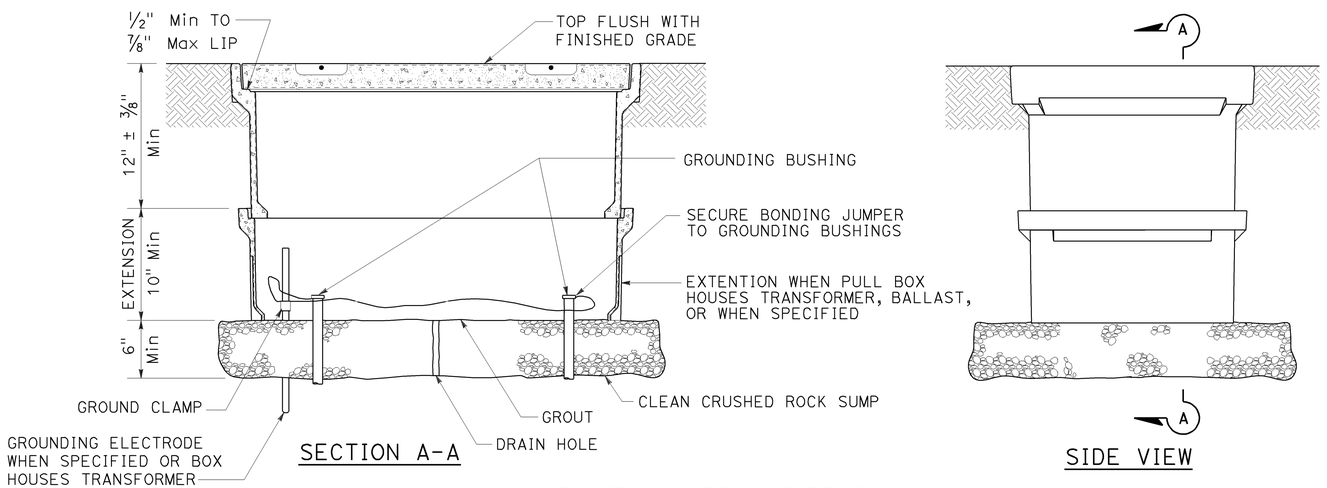

SECTION A-A

SIDE VIEW

INSTALLATION DETAILS

DETAIL A

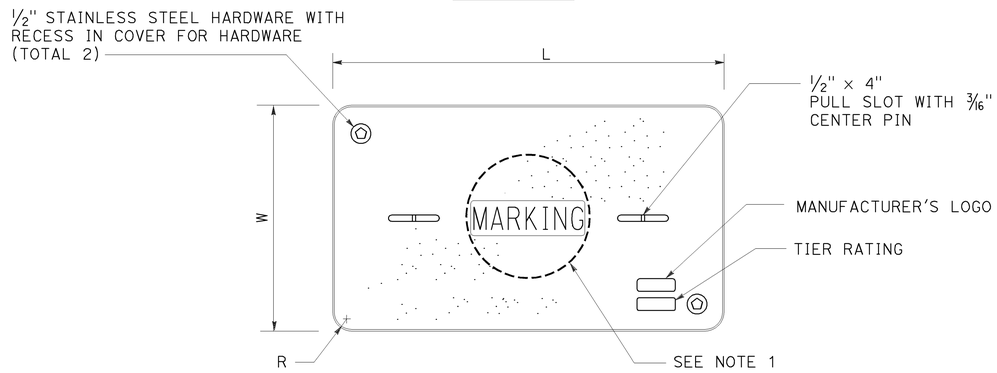

COVER TOP VIEW

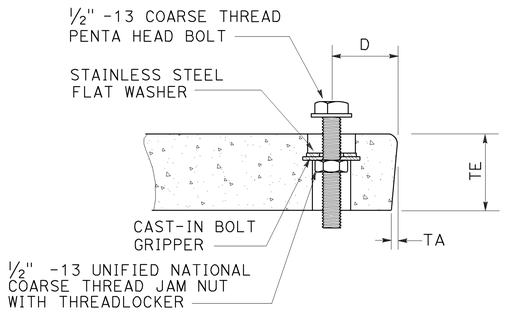

TYPICAL COVER CAPTIVE BOLT
OR SIMILAR

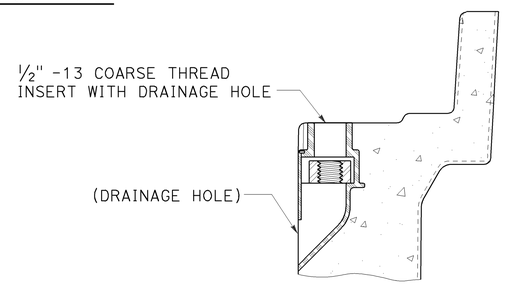

TYPICAL THREADED INSERT
OR SIMILAR

DIMENSION TABLE

PULL BOX	PULL BOX			COVER						
	MINIMUM DEPTH BOX	MINIMUM DEPTH EXTENSION	MAXIMUM WEIGHT	L	W	R	TE	TA	D	MAXIMUM WEIGHT
No. 3½	12"	N/A	40 lb	1′ - 3⅜"	10⅛"	1⅜"	2"	⅛"	1¾"	30 lb
No. 5	12"	10"	55 lb	1′ - 11¼"	1′ - 1¾"	1⅜"	2"	⅛"	1¾"	60 lb
No. 6	12"	10"	70 lb	2′ - 6½"	1′ - 5½"	1⅜"	2"	⅛"	2"	85 lb

DIST	COUNTY	ROUTE	POST MILES TOTAL PROJECT	SHEET NO.	TOTAL SHEETS
04	Ala	880	2.9/27.3	893	906

Theresa Gabriel
REGISTERED ELECTRICAL ENGINEER

Theresa Aziz Gabriel
No. E15129
Exp. 6-30-14
ELECTRICAL
REGISTERED PROFESSIONAL ENGINEER
STATE OF CALIFORNIA

July 19, 2013
PLANS APPROVAL DATE

THE STATE OF CALIFORNIA OR ITS OFFICERS OR AGENTS SHALL NOT BE RESPONSIBLE FOR THE ACCURACY OR COMPLETENESS OF SCANNED COPIES OF THIS PLAN SHEET.

TO ACCOMPANY PLANS DATED 6-22-15

NOTES:

1. Pull box covers shall be marked as follows: "SERVICE" Service circuits between service point and service disconnect; "SPRINKLER-CONTROL" sprinkler control circuits, 50 V or less; "CALTRANS" on all pull boxes, except pull boxes marked "SPRINKLER-CONTROL"; and "TELEPHONE" Telephone service;

   A) No. 3½ pull box.
      1) "SIGNAL" - Traffic signal circuits with or without lighting or sign lighting circuits.
      2) "LIGHTING" - Lighting or sign lighting circuits where voltage is under 600 V.

   B) No. 5, 6, 9 or 9A pull box.
      1) "TRAFFIC SIGNAL" - Traffic signal circuits with or without lighting or sign lighting circuits.
      2) "LIGHTING" - Lighting or sign lighting circuits where voltage is under 600 V.
      3) "LIGHTING-HIGH VOLTAGE" - Lighting or sign lighting circuits where voltage is above 600 V.
      4) "IRRIGATION" - Circuits to irrigation controller 120 V or more.
      5) "RAMP METER" - Ramp meter circuits.
      6) "COUNT STATION" - Count or speed monitor circuits.
      7) "COMMUNICATIONS" - Communication circuits.
      8) "TOS COMMUNICATIONS" - TOS communication line.
      9) "TOS POWER" - TOS power.
      10) "TDC POWER" - Telephone demarcation cabinet power.
      11) "CCTV" - Closed circuit television circuits.
      12) "TMS" - Traffic monitoring station circuits.
      13) "CMS" - Changeable message sign circuits.
      14) "HAR" - Highway advisory radio circuits.
      15) "BOOSTER PUMP" - Booster pump circuit.

2. The nominal dimensions of the opening in which the cover sets shall be the same as the cover dimensions except the length and width dimensions shall be ⅛" greater.
3. Covers and boxes shall be interchangeable with California standard male and female gages. When interchanged with a standard male or female gage, the top surfaces shall be flush within ⅛". Top outside radius of covers and pull boxes shall have a ⅛" radius.
4. Pull box extension may be another pull box as long as the bottom edge of the pull box can fit into the cover opening.
5. All dimensions for the cover for non-traffic pull box are nominal values.

STATE OF CALIFORNIA
DEPARTMENT OF TRANSPORTATION

ELECTRICAL SYSTEMS (NON-TRAFFIC PULL BOX)

NO SCALE

RSP ES-8A DATED JULY 19, 2013 SUPERSEDES RSP ES-8A DATED JANUARY 20, 2012 THAT SUPPLEMENTS THE STANDARD PLANS BOOK DATED 2010.

REVISED STANDARD PLAN RSP ES-8A

2010 REVISED STANDARD PLAN RSP ES-8A

7-15-13

DIST	COUNTY	ROUTE	POST MILES TOTAL PROJECT	SHEET NO.	TOTAL SHEETS
04	Ala	880	2.9/27.3	894	906

Theresa Gabriel
REGISTERED ELECTRICAL ENGINEER

REGISTERED PROFESSIONAL ENGINEER
Theresa Aziz Gabriel
No. E15129
Exp. 6-30-14
ELECTRICAL
STATE OF CALIFORNIA

July 19, 2013
PLANS APPROVAL DATE

THE STATE OF CALIFORNIA OR ITS OFFICERS OR AGENTS SHALL NOT BE RESPONSIBLE FOR THE ACCURACY OR COMPLETENESS OF SCANNED COPIES OF THIS PLAN SHEET.

TO ACCOMPANY PLANS DATED 6-22-15

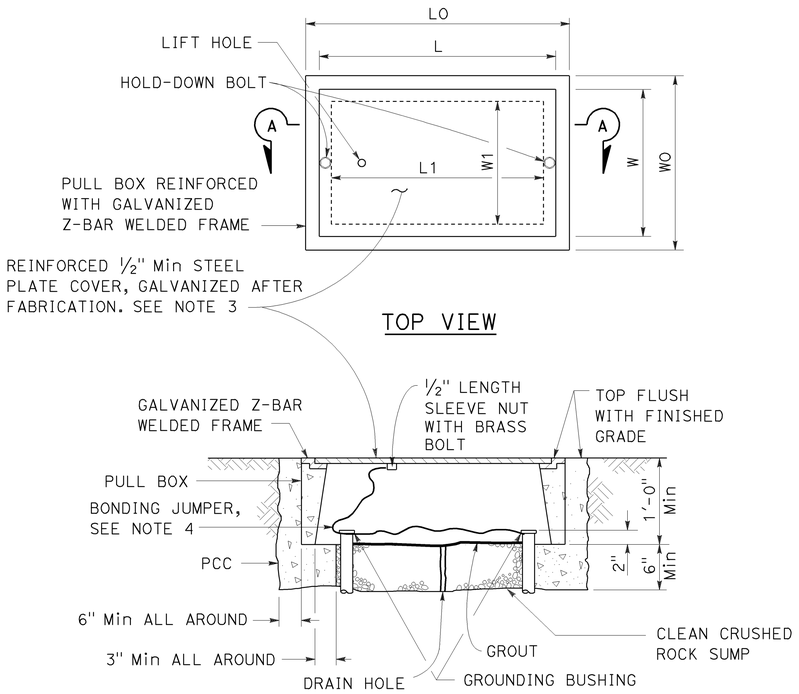

SECTION A-A

No. 3½(T), No. 5(T) AND No. 6(T) TRAFFIC PULL BOX

NOTES:

1. Traffic pull box shall be provided with steel cover and special concrete footing. Steel cover shall have embossed non-skid pattern.
2. Steel reinforcing shall be as regularly used in the standard products of the respective manufacturer.
3. Pull box covers shall be marked as follows: "SERVICE" Service circuits between service point and service disconnect; "SPRINKLER-CONTROL" Sprinkler control circuits, 50 V or less; "CALTRANS" On all pull boxes, except pull boxes marked "SPRINKLER-CONTROL"; and "TELEPHONE" Telephone service.
   A) No. 3½(T) pull box.
      1) "SIGNAL" - Traffic signal circuits with or without lighting or sign lighting circuits.
      2) "LIGHTING" - Lighting or sign lighting circuits where voltage is under 600 V.
   B) No. 5(T) or 6(T) pull box.
      1) "TRAFFIC SIGNAL" - Traffic signal circuits with or without lighting or sign lighting circuits.
      2) "LIGHTING" - Lighting or sign lighting circuits where voltage is under 600 V.
      3) "LIGHTING-HIGH VOLTAGE" - Lighting or sign lighting circuits where voltage is above 600 V.
      4) "IRRIGATION" - Circuits to irrigation controller 120 V or more.
      5) "RAMP METER" - Ramp meter circuits.
      6) "COUNT STATION" - Count or speed monitor circuits.
      7) "COMMUNICATION" - Communication circuits.
      8) "TOS COMMUNICATIONS" - TOS communications line.
      9) "TOS POWER" - TOS power.
      10) "TDC POWER" - Telephone demarcation cabinet power.
      11) "CCTV" - Closed circuit television circuits.
      12) "TMS" - Traffic monitoring station circuits.
      13) "CMS" - Changeable message sign circuits.
      14) "HAR" - Highway advisory radio circuits.
      15) "BOOSTER PUMP" - Booster pump circuit.
4. Bonding jumper for metal covers shall be 3' long, minimum.
5. The nominal dimensions of the opening in which the cover sets shall be the same as the cover dimensions except the length and width dimensions shall be ⅛" greater.
6. Covers and boxes shall be interchangeable with California standard male and female gages. When interchanged with a standard male or female gage, the top surfaces shall be flush within ⅛".

DIMENSION TABLE

PULL BOX	PULL BOX						COVER				
	MINIMUM * THICKNESS	MINIMUM DEPTH BOX AND EXTENSION	WO	LO	L1	W1	L **	W **	R	EDGE THICKNESS	EDGE TAPER
No. 3½(T)	1½"	1'-0"	1'-5"± 1"	1'-8⅞"±	1'-2½"±	10⅝"± 1"	1'-8"±	1'-1¾"±	0"	½"	NONE
No. 5(T)	1¾"	1'-0"	1'-11½"± 1"	2'-5½"±	1'-7"±	1'-1"± 1"	2'-3"±	1'-4"±	0"	½"	NONE
No. 6(T)	2"	1'-0"	2'-6"± 1"	2'-11½"±	1'-11½"±	1'-5"± 1"	2'-9"±	1'-8"±	0"	½"	NONE

* EXCLUDING CONDUIT WEB ** TOP DIMENSION

STATE OF CALIFORNIA
DEPARTMENT OF TRANSPORTATION

ELECTRICAL SYSTEMS (TRAFFIC PULL BOX)

NO SCALE

RSP ES-8B DATED JULY 19, 2013 SUPERSEDES RSP ES-8B DATED JANUARY 20, 2012 THAT SUPPLEMENTS THE STANDARD PLANS BOOK DATED 2010.

REVISED STANDARD PLAN RSP ES-8B

2010 REVISED STANDARD PLAN RSP ES-8B

7-15-13

Dist	COUNTY	ROUTE	POST MILES TOTAL PROJECT	SHEET No.	TOTAL SHEETS
04	Ala	880	2.9/27.3	895	906

Theresa Gabriel
REGISTERED ELECTRICAL ENGINEER

Theresa Aziz Gabriel No. E15129 Exp. 6-30-14 ELECTRICAL — REGISTERED PROFESSIONAL ENGINEER — STATE OF CALIFORNIA

July 19, 2013
PLANS APPROVAL DATE

THE STATE OF CALIFORNIA OR ITS OFFICERS OR AGENTS SHALL NOT BE RESPONSIBLE FOR THE ACCURACY OR COMPLETENESS OF SCANNED COPIES OF THIS PLAN SHEET.

TO ACCOMPANY PLANS DATED 6-22-15

2010 REVISED STANDARD PLAN RSP ES-10A

ISOFOOTCANDLE CURVE - MINIMUM

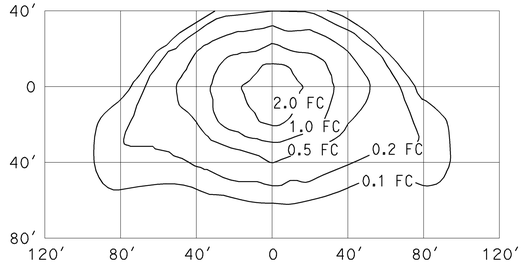

TYPE III MEDIUM CUTOFF

Cutoff Luminaire
34′ Mounting Height
Lamp operated at 22,000 lm
200-W high pressure sodium lamp
ANSI Designation S66

ISOFOOTCANDLE CURVE - MINIMUM

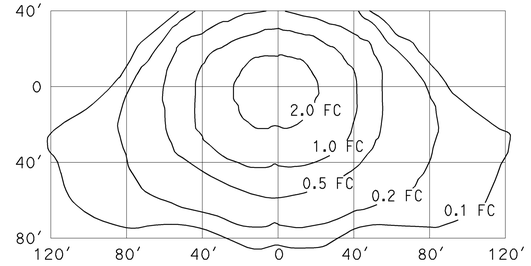

TYPE III MEDIUM CUTOFF

Cutoff Luminaire
40′ Mounting Height
Lamp operated at 37,000 lm
310-W high pressure sodium lamp
ANSI Designation S67

ISOFOOTCANDLE CURVE - MINIMUM

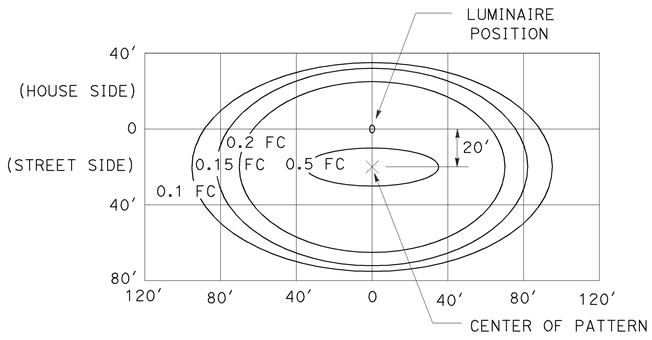

LED LUMINAIRE ROADWAY 1

165-W at 34′ Mounting Height

ISOFOOTCANDLE CURVE - MINIMUM

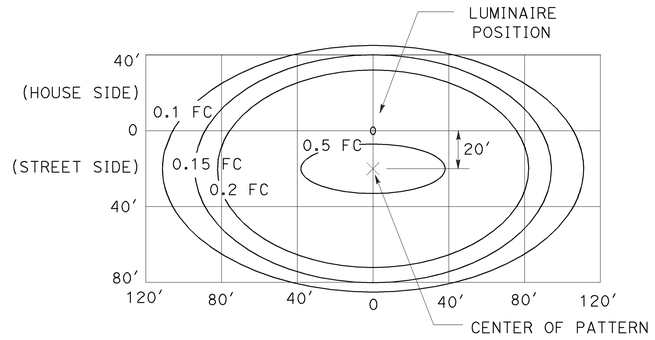

LED LUMINAIRE ROADWAY 2

235-W at 40′ Mounting Height

ISOFOOTCANDLE CURVE - MINIMUM

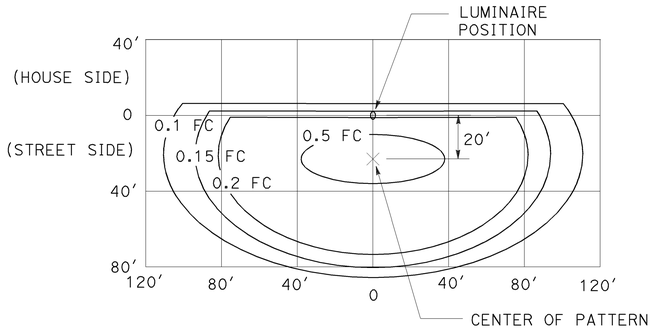

LED LUMINAIRE ROADWAY 3

235-W at 40′ Mounting Height
with back side control

ISOFOOTCANDLE CURVE - MINIMUM

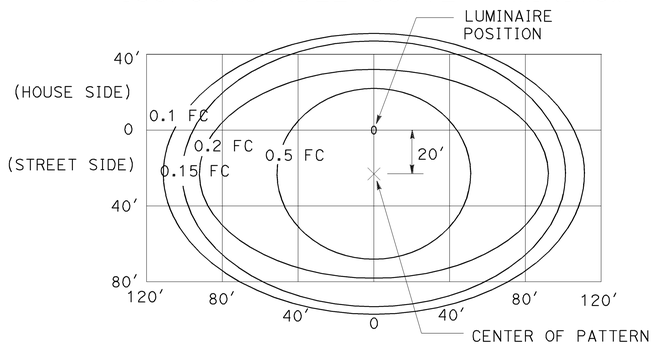

LED LUMINAIRE ROADWAY 4

300-W at 40′ Mounting Height

ISOFOOTCANDLE CURVE - MINIMUM

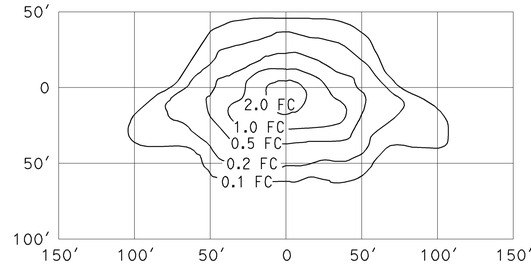

TYPE III MEDIUM CUTOFF

Cutoff Luminaire
30′ Mounting Height
Lamp operated at 16,000 lm
150-W high pressure sodium lamp
ANSI Designation S55

ISOFOOTCANDLE CURVE - MINIMUM

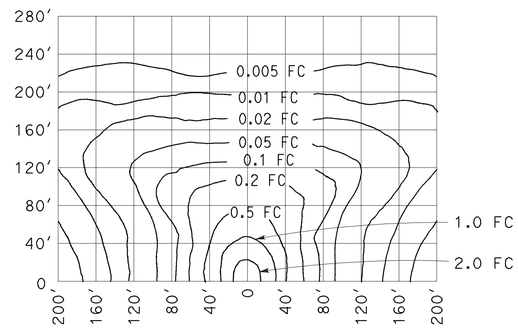

LOW PRESSURE SODIUM LUMINAIRE

40′ Mounting Height
Lamp operated at 33,000 lm
180-W low pressure sodium lamp

STATE OF CALIFORNIA
DEPARTMENT OF TRANSPORTATION

ELECTRICAL SYSTEMS (ISOFOOTCANDLE DIAGRAMS)

NO SCALE

RSP ES-10A DATED JULY 19, 2013 SUPERSEDES RSP ES-10A DATED JULY 20, 2012 THAT SUPPLEMENTS THE STANDARD PLANS BOOK DATED 2010.

REVISED STANDARD PLAN RSP ES-10A

7-9-13

Dist	COUNTY	ROUTE	POST MILES TOTAL PROJECT	SHEET No.	TOTAL SHEETS
04	Ala	880	2.9/27.3	896	906

Jeffery G. McRae
REGISTERED ELECTRICAL ENGINEER

July 20, 2012
PLANS APPROVAL DATE

REGISTERED PROFESSIONAL ENGINEER
Jeffery G. McRae
No. E14512
Exp. 6-30-14
ELECTRICAL
STATE OF CALIFORNIA

THE STATE OF CALIFORNIA OR ITS OFFICERS OR AGENTS SHALL NOT BE RESPONSIBLE FOR THE ACCURACY OR COMPLETENESS OF SCANNED COPIES OF THIS PLAN SHEET.

TO ACCOMPANY PLANS DATED 6-22-15

ISOFOOTCANDLE CURVE - MINIMUM

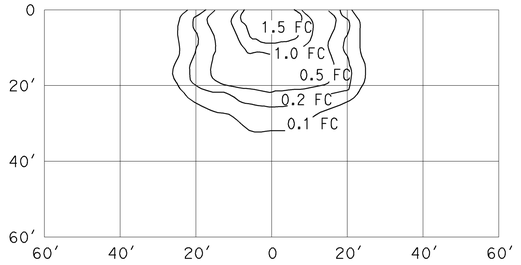

WALL LUMINAIRE
15′ Mounting Height
Lamp operated at 5,800 lm
70-W high pressure sodium lamp
ANSI Designation S62

ISOFOOTCANDLE CURVE - MINIMUM

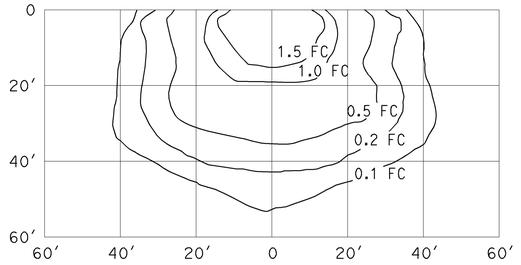

WALL LUMINAIRE
15′ Mounting Height
Lamp operated at 9,500 lm
100-W high pressure sodium lamp
ANSI Designation S54

ISOFOOTCANDLE CURVE - MINIMUM

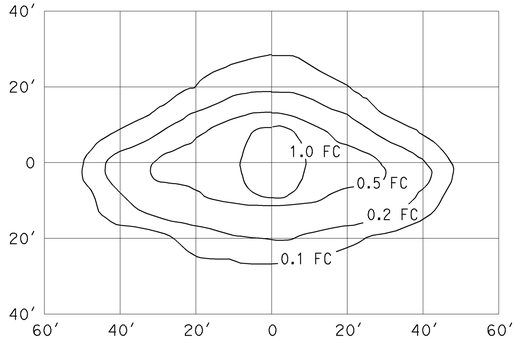

PENDANT SOFFIT LUMINAIRE
TYPE III SHORT
17′ Mounting Height
Lamp operated at 5,800 lm
70-W high pressure sodium lamp
ANSI Designation S62

ISOFOOTCANDLE CURVE - MINIMUM

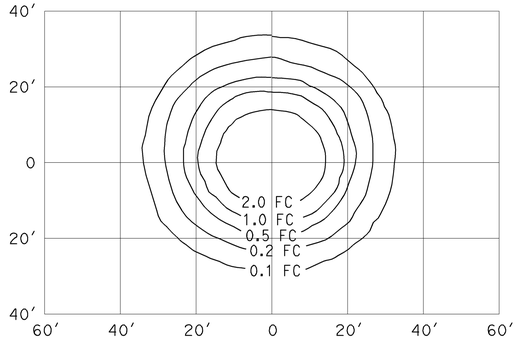

PENDANT SOFFIT LUMINAIRE
17′ Mounting Height
Lamp operated at 5,800 lm
70-W high pressure sodium lamp
ANSI Designation S62

ISOFOOTCANDLE CURVE - MINIMUM

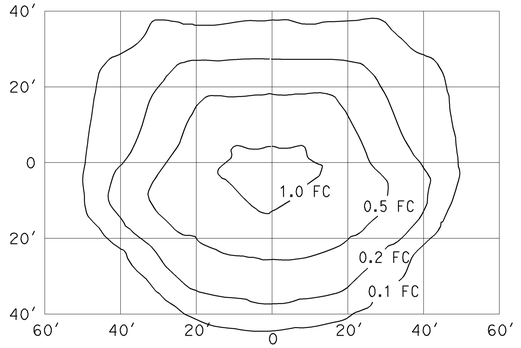

FLUSH SOFFIT LUMINAIRE
17′ Mounting Height
Lamp operated at 5,800 lm
70-W high pressure sodium lamp
ANSI Designation S62

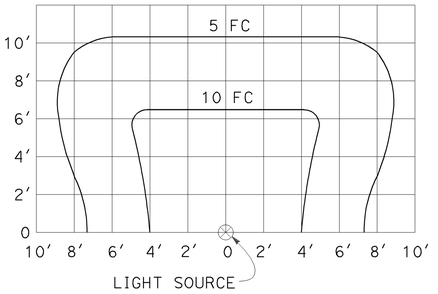

SIGN LIGHTING FIXTURE
ISOFOOTCANDLE DIAGRAM

NOTES:

1. Curves represent the minimum footcandle (FC) of initial illumination on a 10′-0" x 20′-0" panel.
2. The FC shown are with the fixture attached to the light fixture mounting channel which places the center of the source 4′-8" in front of panel and 1′-0" below the bottom edge.
3. Applicable lamp: 85-W fluorescent phosphor coated induction lamp.

STATE OF CALIFORNIA
DEPARTMENT OF TRANSPORTATION

ELECTRICAL SYSTEMS (ISOFOOTCANDLE DIAGRAMS)

NO SCALE

RSP ES-10B DATED JULY 20, 2012 SUPPLEMENTS THE STANDARD PLANS BOOK DATED 2010.

REVISED STANDARD PLAN RSP ES-10B

2010 REVISED STANDARD PLAN RSP ES-10B

2-14-12

Dist	COUNTY	ROUTE	POST MILES TOTAL PROJECT	SHEET No.	TOTAL SHEETS
04	Ala	880	2.9/27.3	897	906

REGISTERED CIVIL ENGINEER

July 19, 2013
PLANS APPROVAL DATE

REGISTERED PROFESSIONAL ENGINEER
Stanley P. Johnson
No. C57793
Exp. 3-31-14
CIVIL
STATE OF CALIFORNIA

THE STATE OF CALIFORNIA OR ITS OFFICERS OR AGENTS SHALL NOT BE RESPONSIBLE FOR THE ACCURACY OR COMPLETENESS OF SCANNED COPIES OF THIS PLAN SHEET.

TO ACCOMPANY PLANS DATED 6-22-15

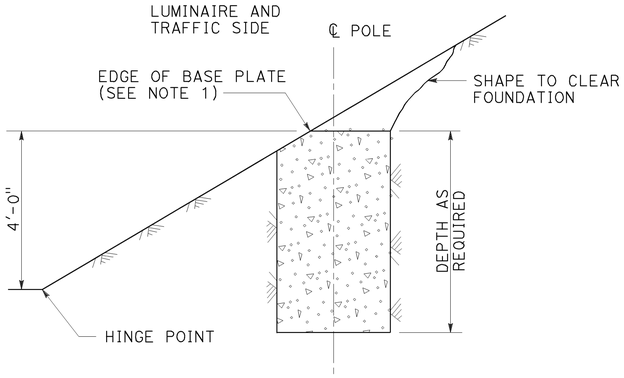

CUT SLOPES
STEEPER THAN 4:1,
LESS THAN 2:1
DETAIL A-1
See Note 2 and 3

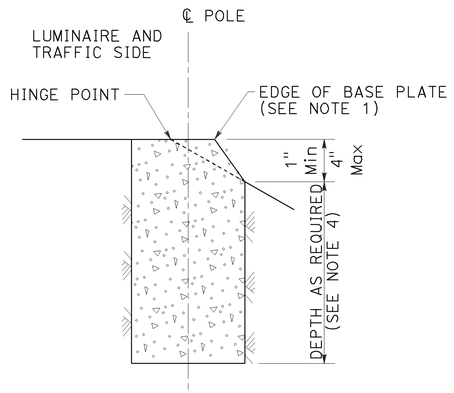

FILL SLOPES
STEEPER THAN 4:1,
LESS THAN 2:1
DETAIL A-2
See Note 2 and 3

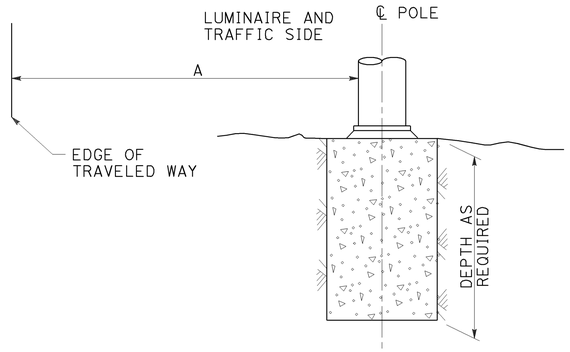

FLAT SECTIONS, CUT OR FILL SLOPES
4:1 OR FLATTER
DETAIL A-3
See Note 2

STANDARD TYPE	SETBACK (DIMENSION A)
32	30'-0" (Min)
31	20'-0" (Min)
15, 15D, 15-SB, 21, 21D, 30	ARM LENGTH (Min)

FOUNDATIONS ADJACENT TO ALL ROADWAYS EXCEPT IN SIDEWALK, MEDIAN AND ISLAND AREAS
DETAIL A

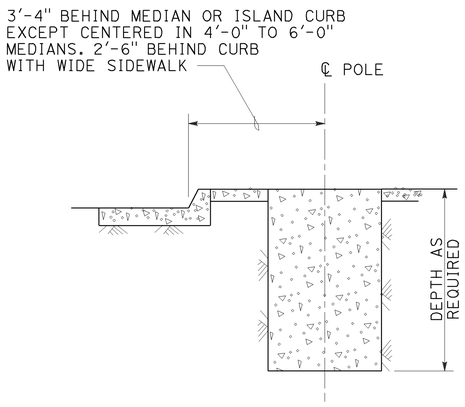

MEDIAN, ISLAND
OR WIDE SIDEWALK
DETAIL B-1
7' Wide and wider

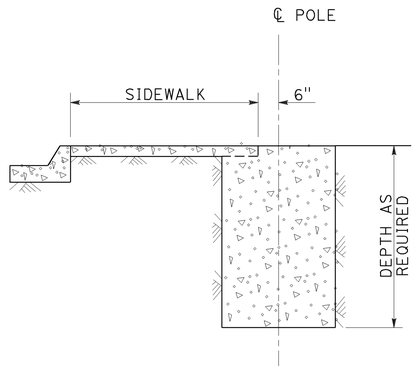

NARROW SIDEWALK
DETAIL B-2
Less than 7' wide

FOUNDATIONS IN SIDEWALK, MEDIAN AND ISLAND AREAS
DETAIL B

NOTES:

1. Where a portion of the foundation is above grade, the top edges shall have a 1" chamfer.
2. Slopes shall be horizontal to vertical ratio (Horizontal : Vertical).
3. Horizontal setbacks on cut and fill slopes steeper than 4:1 shall not exceed the distance shown for flat sections.
4. CIDH embedment depth shall be increased beyond standard depths by the diameter of the CIDH.

STATE OF CALIFORNIA
DEPARTMENT OF TRANSPORTATION

ELECTRICAL SYSTEMS (FOUNDATION INSTALLATIONS)

NO SCALE

RSP ES-11 DATED JULY 19, 2013 SUPERSEDES STANDARD PLAN ES-11
DATED MAY 20, 2011 - PAGE 488 OF THE STANDARD PLANS BOOK DATED 2010.

REVISED STANDARD PLAN RSP ES-11

2010 REVISED STANDARD PLAN RSP ES-11

7-9-13

POLE TYPE	POLE DATA				BASE PLATE DATA				CIDH	
	HEIGHT "h"	Min OD		THICKNESS	"C"	THICKNESS	ANCHOR BOLT SIZE	BC = BOLT CIRCLE	Dia	"d"
		BASE	TOP							
CCTV 25	25′	7⅜"	3¾"	0.1793"	1′-1"	1"	1½" ø x 36"	11½"	2′-6"	7′-0"
CCTV 30	30′	8"			1′-1½"			1′-0"		7′-6"
CCTV 35	35′	8⅝"			1′-2"			1′-1"		8′-0"
CCTV 40	40′	9⅜"			1′-3"			1′-1½"		8′-6"
CCTV 45	45′	10"						1′-2"		

Dist	COUNTY	ROUTE	POST MILES TOTAL PROJECT	SHEET No.	TOTAL SHEETS
04	Ala	880	2.9/27.3	898	906

REGISTERED CIVIL ENGINEER

November 15, 2013
PLANS APPROVAL DATE

REGISTERED PROFESSIONAL ENGINEER — Stanley P. Johnson — No. C57793 — Exp. 3-31-14 CIVIL — STATE OF CALIFORNIA

THE STATE OF CALIFORNIA OR ITS OFFICERS OR AGENTS SHALL NOT BE RESPONSIBLE FOR THE ACCURACY OR COMPLETENESS OF SCANNED COPIES OF THIS PLAN SHEET.

TO ACCOMPANY PLANS DATED 6-22-15

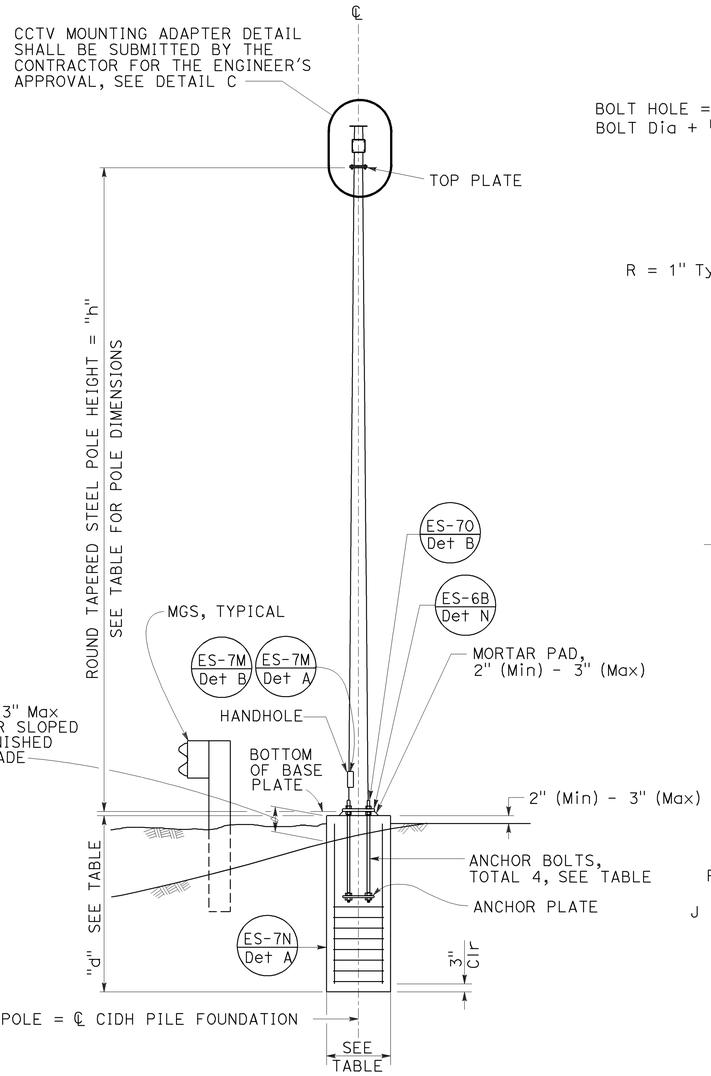

ELEVATION A

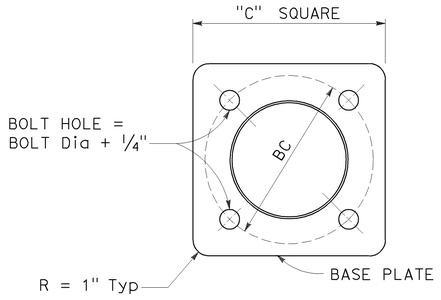

BASE PLATE
DETAIL A

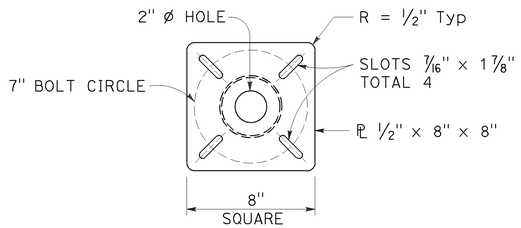

TOP PLATE
DETAIL B

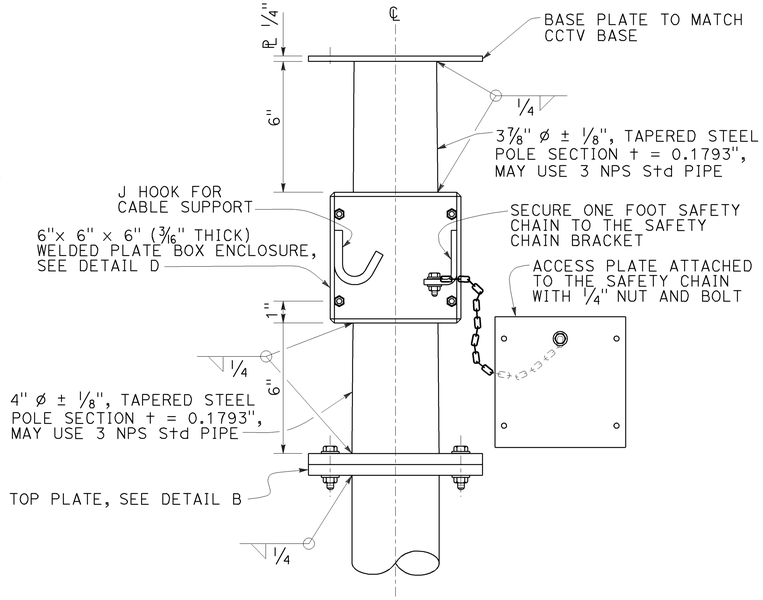

CLOSED CIRCUIT TELEVISION MOUNTING ADAPTER
DETAIL C

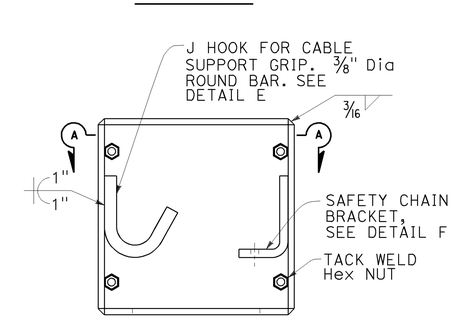

BOX ENCLOSURE
DETAIL D

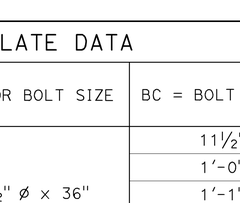

J HOOK
DETAIL E

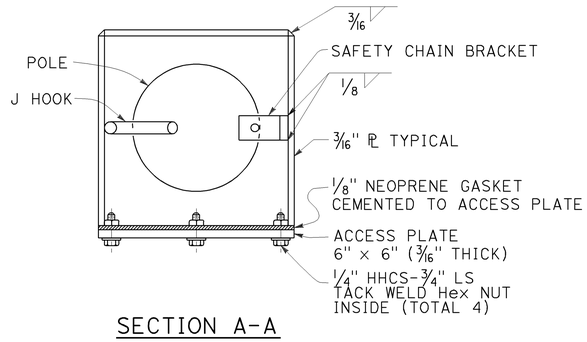

SECTION A-A

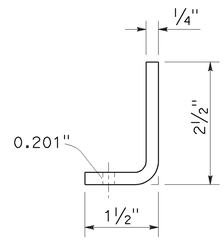

SAFETY CHAIN BRACKET
DETAIL F

NOTES:

1. The Contractor shall verify controlling field dimensions before ordering or fabricating any material.
2. During pole installation, the post shall be raked as necessary with the use of leveling nuts to provide a plumb pole axis.
3. Wind Loadings (3-second gust): 100 mph
4. Unit Stresses (Structural Steel):
   a. fy = 55,000 psi (tapered steel tube and anchor bolts)
   b. fy = 50,000 psi (unless otherwise noted)
5. Unit Stresses (Reinforced Concrete):
   a. f′c = 3,625 psi
   b. fy = 60,000 psi

STATE OF CALIFORNIA
DEPARTMENT OF TRANSPORTATION

ELECTRICAL SYSTEMS (CLOSED CIRCUIT TELEVISION, 25' TO 45' POLE)

NO SCALE

RSP ES-16B DATED NOVEMBER 15, 2013 SUPERSEDES STANDARD PLAN ES-16B DATED MAY 20, 2011 - PAGE 501 OF THE STANDARD PLANS BOOK DATED 2010.

REVISED STANDARD PLAN RSP ES-16B

2010 REVISED STANDARD PLAN RSP ES-16B

10-4-13

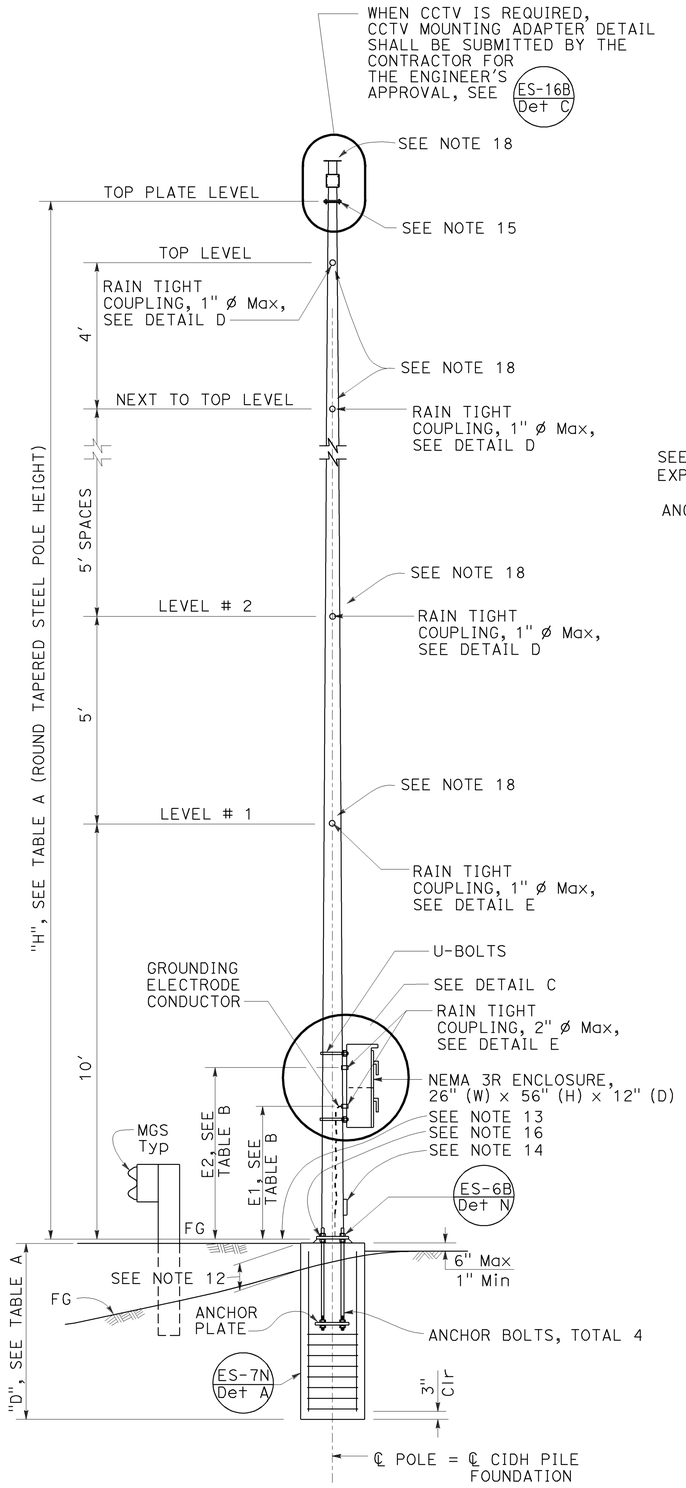

ELEVATION A

TABLE A										
POLE TYPE	POLE DATA				BASE PLATE DATA				"D" 2'-6" ø CIDH Pile	
	HEIGHT "H"	Min OD		THICKNESS	"C"	THICKNESS	ANCHOR BOLTS SIZE	BC = BOLT CIRCLE	LEVEL GROUND	UP TO 2:1
		BASE	TOP							
VDS 30	30'	8"	3⅞"	0.1793"	1'-1½"	1½"	1½" ø x 3'-0"	1'-1½"	11'-0"	13'-0"
VDS 35	35'	8⅝"			1'-2"			1'-2"	11'-0"	
VDS 40	40'	9⅜"			1'-3"			1'-3"	12'-0"	14'-0"

TABLE B		
POLE TYPE	COUPLING	
	E1(Max)	E2(Max)
VDS 30	3'-6"	4'-9"
VDS 35		
VDS 40		

TABLE C		
SPREAD FOOTING		
GROUND	FOOTING SIZE (LENGTH x WIDTH x DEPTH)	REINFORCEMENT TOP & BOTTOM
LEVEL	8'-6" x 8'-6" x 2'-0"	12 - #5 EW
UP TO 2:1	10'-0" x 10'-0" x 2'-0"	15 - #5 EW

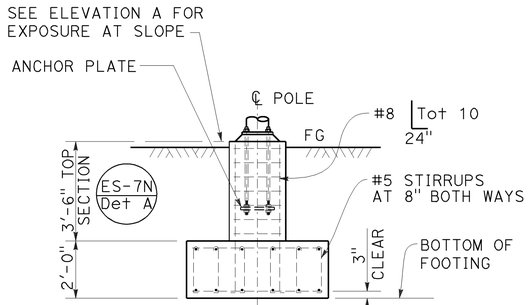

ALTERNATIVE FOOTING
ELEVATION B

TABLE D - LIMITATION ON ATTACHMENTS *		
LOCATION	MAXIMUM TOTAL EPA PER LEVEL (SQUARE FEET)	MAXIMUM TOTAL WEIGHT (lb)
LEVEL #1	14	200
LEVEL #2		
LEVEL #3	10 ***	
LEVEL #4 (VDS 35 AND VDS 40 ONLY)	2.5	50
LEVEL #5 (VDS 40 ONLY)		
NEXT TO TOP LEVEL		
TOP LEVEL		
ON TOP PLATE LEVEL **		

* MAXIMUM HORIZONTAL EXTENT BEYOND POLE FACE IS 4 FEET.
** MAXIMUM EXTENT ABOVE TOP PLATE IS 3 FEET.
*** 14 IF LEVEL #1 IS ZERO.

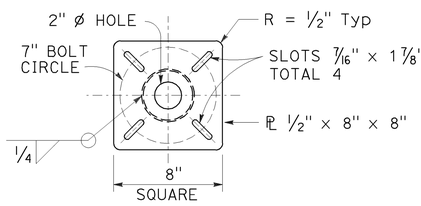

TOP PLATE
DETAIL A

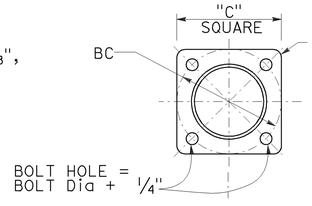

BASE PLATE
DETAIL B

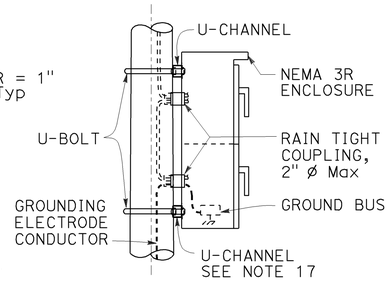

DETAIL C

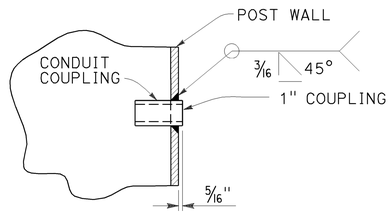

1" COUPLING
DETAIL D

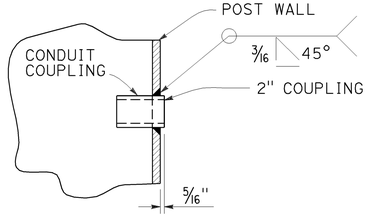

2" COUPLING
DETAIL E

Dist	COUNTY	ROUTE	POST MILES TOTAL PROJECT	SHEET No.	TOTAL SHEETS
04	Ala	880	2.9/27.3	899	906

REGISTERED CIVIL ENGINEER

November 15, 2013
PLANS APPROVAL DATE

REGISTERED PROFESSIONAL ENGINEER
Stanley P. Johnson
No. C57793
Exp. 3-31-14
CIVIL
STATE OF CALIFORNIA

THE STATE OF CALIFORNIA OR ITS OFFICERS OR AGENTS SHALL NOT BE RESPONSIBLE FOR THE ACCURACY OR COMPLETENESS OF SCANNED COPIES OF THIS PLAN SHEET.

TO ACCOMPANY PLANS DATED 6-22-15

NOTES:

1. All steel shall be galvanized after fabrication.
2. During pole installation the post shall be raked as necessary with the use of leveling nuts to provide a plumb pole axis.
3. The foundation shall be treated as level ground condition if the slope inclination is flatter than 4 : 1 (Horizontal : Vertical)
4. For devices mounted and mounting heights, see TABLE B.
5. Design Specification: AASHTO Standard Specification for structural support for highway signs, luminaires and traffic signal dated 2001.
6. Wind Loadings: 100 mph (3-second gust)
7. Unit Stresses (Structural Steel):
   a. fy = 55,000 psi (tapered steel tube)
   b. fy = 50,000 psi (unless otherwise noted)
8. Anchor bolts: fy = 55,000 psi
9. Unit Stresses (Reinforced Concrete):
   a. f'c = 3,600 psi
   b. fy = 60,000 psi
10. The Contractor shall verify all controlling field dimensions before ordering of fabricating any material.
11. When no barriers are used, the NEMA 3R enclosure shall be located on the downstream side and perpendicular to the roadway.
12. 1'-3" (Max) for sloped finished grade.
13. Bottom of base plate.
14. Handhole. ES-7M Det B / ES-7M Det A
15. Top plate.
    Install a blank flange on the top plate when closed circuit television is not used.
16. ES-7O Elev B
17. U-channel with bracket.
18. Use the manufacturer's Effective Projected Area (EPA) for attachments. Assign attachments to nearest level and sum each level, see Table D for limitations.

STATE OF CALIFORNIA
DEPARTMENT OF TRANSPORTATION

ELECTRICAL SYSTEMS (CLOSED CIRCUIT TELEVISION WITH VEHICLE DETECTION SYSTEM, 30' TO 40' POLE)

NO SCALE

RSP ES-16D DATED NOVEMBER 15, 2013 SUPERSEDES RSP ES-16D DATED JULY 19, 2013 AND STANDARD PLAN ES-16D DATED MAY 20, 2011 - PAGE 503 OF THE STANDARD PLANS BOOK DATED 2010.

REVISED STANDARD PLAN RSP ES-16D

2010 REVISED STANDARD PLAN RSP ES-16D

10-4-13

DIST	COUNTY	ROUTE	POST MILES TOTAL PROJECT	SHEET No.	TOTAL SHEETS
04	Ala	880	2.9/27.3	900	906

Tierney L. Sanderson 05-18-15
REGISTERED CIVIL ENGINEER DATE

6-22-15
PLANS APPROVAL DATE

REGISTERED PROFESSIONAL ENGINEER — TIERNEY SANDERSON No. 48605 Exp. 6/30/16 CIVIL — STATE OF CALIFORNIA

The State of California or its officers or agents shall not be responsible for the accuracy or completeness of scanned copies of this plan sheet.

GENERAL NOTES

DESIGN:
AASHTO LRFD BRIDGE DESIGN SPECIFICATIONS, 6th Edition and California Amendments, Preface dated January 2014.
AASHTO Standard Specifications for Structural Supports for Highway Signs, Luminaires and Traffic Signals, 6th Edition.

LIVE LOADING:
HL93 and permit design vehicle.
Wind Loadings: 100 MPH (3 Second gust)

UNIT STRESSES:
Structural Steel: fy=55,000 psi tapered steel tube
fy=50,000 psi unless otherwise noted
Anchor Bolts: fy=55,000 psi
Reinforced Concrete:
f_y=60 ksi (Yield Strength of Reinforcement)
f'_c=3.6 ksi (Compressive Strength at 28 days)

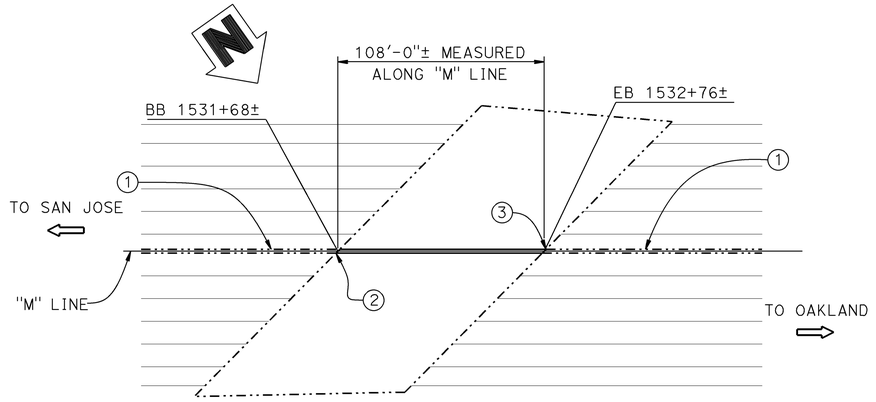

HETCH HETCHY AQUEDUCT BRIDGE

BRIDGE NO. 33-0272 POST MILE 7.32
1"=40'

QUANTITIES

BRIDGE REMOVAL (PORTION), LOCATION A	LUMP SUM	
CONCRETE BARRIER (TYPE 60GA MODIFIED)	108	LF

STANDARD PLANS DATED 2010

	A10A	ABBREVIATIONS (SHEET 1 OF 2)
RSP	A10B	ABBREVIATIONS (SHEET 2 OF 2)
	A10C	LINES AND SYMBOLS (SHEET 1 OF 3)
	A10D	LINES AND SYMBOLS (SHEET 2 OF 3)
	A10E	LINES AND SYMBOLS (SHEET 3 OF 3)
	A76D	CONCRETE BARRIER TYPE 60G
	A76E	CONCRETE BARRIER TYPE 60G
	ES-6D	ELECTRICAL SYSTEMS (LIGHTING STANDARD, TYPES 15D AND 21D, DOUBLE LUMINAIRE MAST ARM)
	ES-9C	ELECTRICAL SYSTEMS (STRUCTURE PULL BOX)

Standard Plan sheet number
Detail number

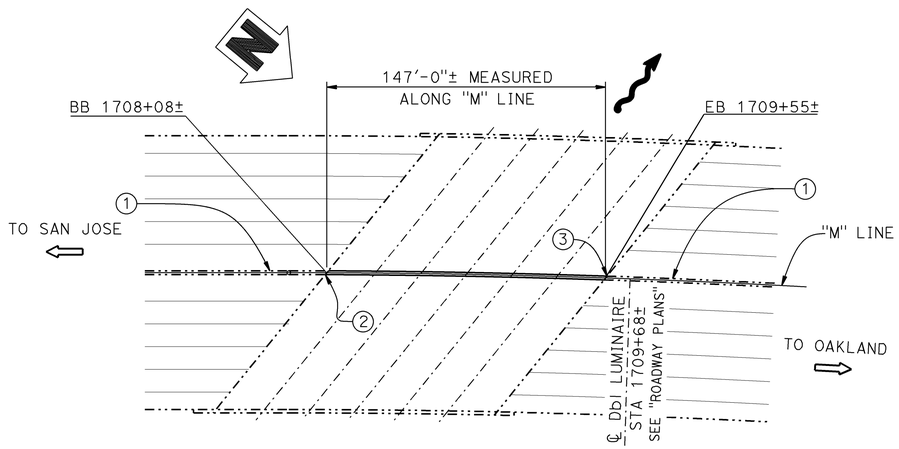

CRANDALL CREEK BRIDGE

BRIDGE NO. 33-0273 POST MILE 10.66
1"=40'

QUANTITIES

BRIDGE REMOVAL (PORTION), LOCATION B	LUMP SUM	
CONCRETE BARRIER (TYPE 60GA MODIFIED)	147	LF

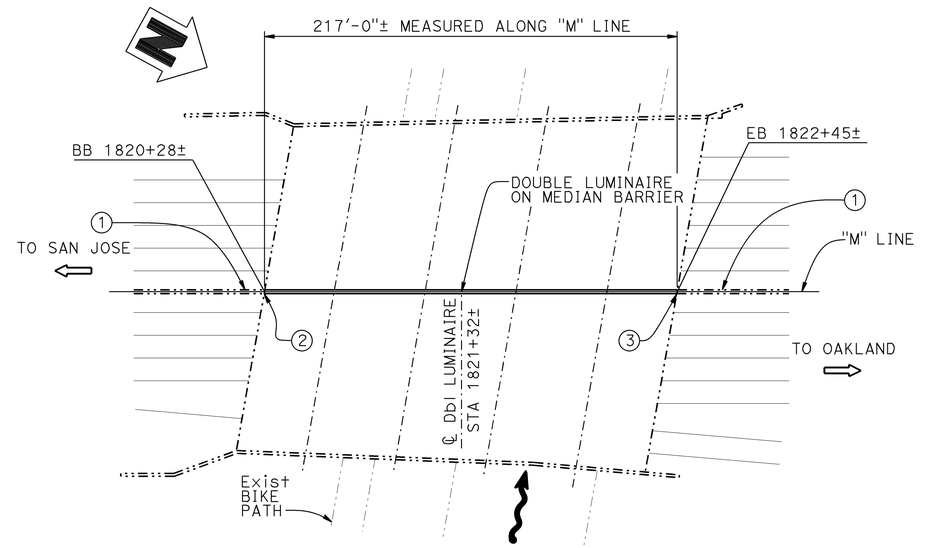

ALAMEDA CREEK BRIDGE

BRIDGE NO. 33-0240 POST MILE 12.78
1"=40'

QUANTITIES

BRIDGE REMOVAL (PORTION), LOCATION C	LUMP SUM	
CONCRETE BARRIER (TYPE 60GA MODIFIED)	217	LF

INDEX TO PLANS

Sheet No.	Title
1.	GENERAL PLAN NO. 1
2.	GENERAL PLAN NO. 2
3.	GENERAL PLAN NO. 3
4.	GENERAL PLAN NO. 4
5.	CONCRETE BARRIER DETAILS
6.	LUMINAIRE BARRIER TRANSITION
7.	LUMINAIRE BARRIER TRANSITION DETAILS

NOTES:

1. Concrete Barrier, see "ROADWAY PLANS".
2. Indicates begin removal of Concrete Barrier Type 50A(Mod)/50B and begin Concrete Barrier Type 60GA(Mod).
3. Indicates end removal of Concrete Barrier Type 50A(Mod)/50B and end Concrete Barrier Type 60GA(Mod).

LEGEND:
—— Indicates new construction
–·–·– Indicates existing structure

NOTE:
THE CONTRACTOR MUST VERIFY ALL CONTROLLING FIELD DIMENSIONS BEFORE ORDERING OR FABRICATING ANY MATERIAL.

NOTE:
For Luminaire barrier details, see "LUMINAIRE BARRIER TRANSITION" and "LUMINAIRE BARRIER TRANSITION DETAILS" sheets.

DANIEL T. ADAMS
DESIGN ENGINEER

	BY	CHECKED
DESIGN	T. Sanderson	D. Azzam
DETAILS	G. Hallstrom	D. Azzam
QUANTITIES	D. Azzam	F. Chen

LOAD & RESISTANCE FACTOR DESIGN — LIVE LOADING: HL93 W/"LOW-BOY"; PERMIT DESIGN VEHICLE

	BY	CHECKED
LAYOUT	T. Sanderson	D. Azzam
SPECIFICATIONS	E. Mansoubi	PLANS AND SPECS COMPARED: E. Mansoubi

ORIGINAL SCALE IN INCHES FOR REDUCED PLANS 0 1 2 3

STATE OF CALIFORNIA
DEPARTMENT OF TRANSPORTATION

DIVISION OF ENGINEERING SERVICES
STRUCTURE DESIGN
DESIGN BRANCH 10

BRIDGE NO. Various
POST MILE Various

MEDIAN BARRIER REPLACEMENT
GENERAL PLAN NO. 1

UNIT: 3621
PROJECT NUMBER & PHASE: 0414000421
CONTRACT NO.: 04-2J0704

DISREGARD PRINTS BEARING EARLIER REVISION DATES →

REVISION DATES				SHEET	OF
10-15-14	03-05-15	01-22-15	02-26-15	1	7

STRUCTURES DESIGN GENERAL PLAN SHEET (ENGLISH) (REV.09-01-10)

FILE => 042j0704agp01.dgn

USERNAME => s1268849 DATE PLOTTED => 18-AUG-2015 TIME PLOTTED => 13:11