INDEX OF PLANS

SHEET No.	DESCRIPTION
1	TITLE AND LOCATION MAP
2	TYPICAL CROSS SECTIONS
3-4	CONSTRUCTION DETAILS
5-7	EROSION CONTROL PLANS, DETAILS AND QUANTITIES
8	DRAINAGE PROFILES
9	CONSTRUCTION AREA SIGNS AND PAVEMENT DELINEATION QIANTITIES
10	TRAFFIC HANDLING AND DELINEATION PLAN
11	SUMMARY OF QUANTITIES
12	TEMPORARY SIGNAL SYSTEM
13-25	REVISED AND NEW STANDARD PLANS

THE STANDARD PLANS LIST APPLICABLE TO THIS CONTRACT IS INCLUDED IN THE NOTICE TO BIDDERS AND SPECIAL PROVISIONS BOOK.

STATE OF CALIFORNIA

DEPARTMENT OF TRANSPORTATION

PROJECT PLANS FOR CONSTRUCTION ON

STATE HIGHWAY

IN SANTA CLARA COUNTY IN SARATOGA 1.5 MILES WEST OF PIERCE ROAD

TO BE SUPPLEMENTED BY STANDARD PLANS DATED MAY 2006

Dist	COUNTY	ROUTE	POST MILES TOTAL PROJECT	SHEET No.	TOTAL SHEETS
04	SCI	9	4.6	1	25

LOCATION MAP

LOCATION OF CONSTRUCTION

PM 4.6

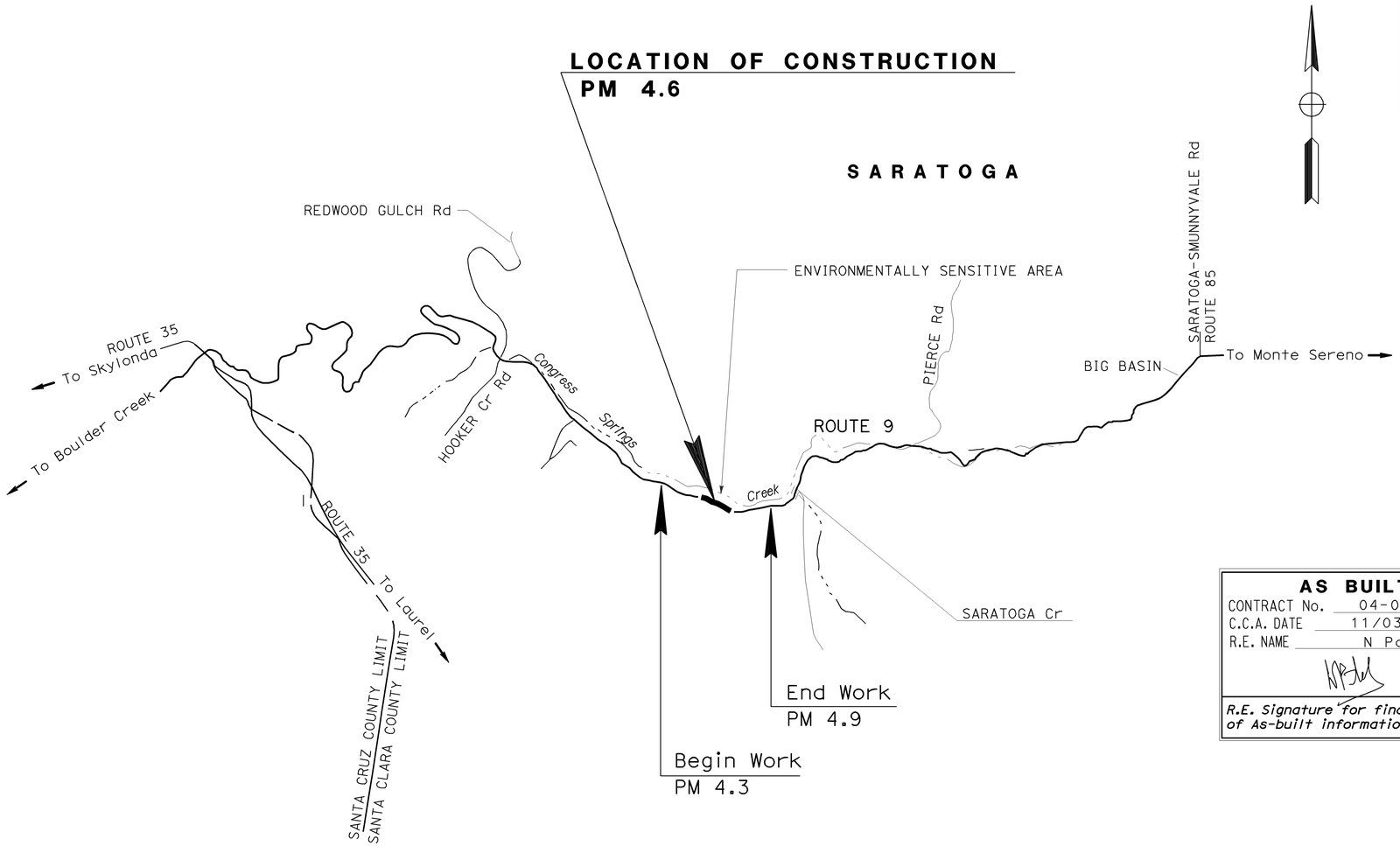

NO SCALE

AS-BUILT
DATE: 02/15/2011
TYPE OF WORK: REPAIR EMBANKMENT

AS BUILT
CONTRACT No. 04-0G4014
C.C.A. DATE 11/03/2010
R.E. NAME N Patel
R.E. Signature for final approval of As-built information

Udaya Y. Shankar 04-12-10
PROJECT ENGINEER DATE
REGISTERED CIVIL ENGINEER

June 7, 2010
PLANS APPROVAL DATE

REGISTERED PROFESSIONAL ENGINEER
UDAYA Y. SHANKAR
No. 71268
Exp. 12/31/11
CIVIL
STATE OF CALIFORNIA

THE STATE OF CALIFORNIA OR ITS OFFICERS OR AGENTS SHALL NOT BE RESPONSIBLE FOR THE ACCURACY OR COMPLETENESS OF SCANNED COPIES OF THIS PLAN SHEET.

THE CONTRACTOR SHALL POSSESS THE CLASS (OR CLASSES) OF LICENSE AS SPECIFIED IN THE "NOTICE TO BIDDERS."

PROJECT MANAGER: JAY HAGHPARAST
DESIGN ENGINEER: UDAYA SHANKAR

LAST REVISION DATE PLOTTED => 15-FEB-2011
04-23-10 TIME PLOTTED => 13:53

CONTRACT No. 04-0G4014

Dist	COUNTY	ROUTE	POST MILES TOTAL PROJECT	SHEET No.	TOTAL SHEETS
04	SCI	9	4.6	2	25

04-12-10
REGISTERED CIVIL ENGINEER DATE

6-7-10
PLANS APPROVAL DATE

REGISTERED PROFESSIONAL ENGINEER
UDAYA Y. SHANKAR
No. 71268
Exp. 12/31/11
CIVIL
STATE OF CALIFORNIA

THE STATE OF CALIFORNIA OR ITS OFFICERS OR AGENTS SHALL NOT BE RESPONSIBLE FOR THE ACCURACY OR COMPLETENESS OF SCANNED COPIES OF THIS PLAN SHEET.

NOTES:

1. DIMENSIONS OF THE PAVEMENT STRUCTURES (STRUCTURAL SECTIONS) ARE SUBJECT TO TOLERANCES SPECIFIED IN THE STANDARD SPECIFICATIONS.
2. SUPERELEVATION AS SHOWN OR AS DIRECTED BY THE ENGINEER.
3. FOR COMPLETE RIGHT OF WAY DATA, SEE RIGHT OF WAY RECORD MAPS AT DISTRICT OFFICE.

LEGEND

RSP (1/2 TON, METHOD A)

RSP (1 TON, METHOD A)

RSP (BACKING No. 1, METHOD B)

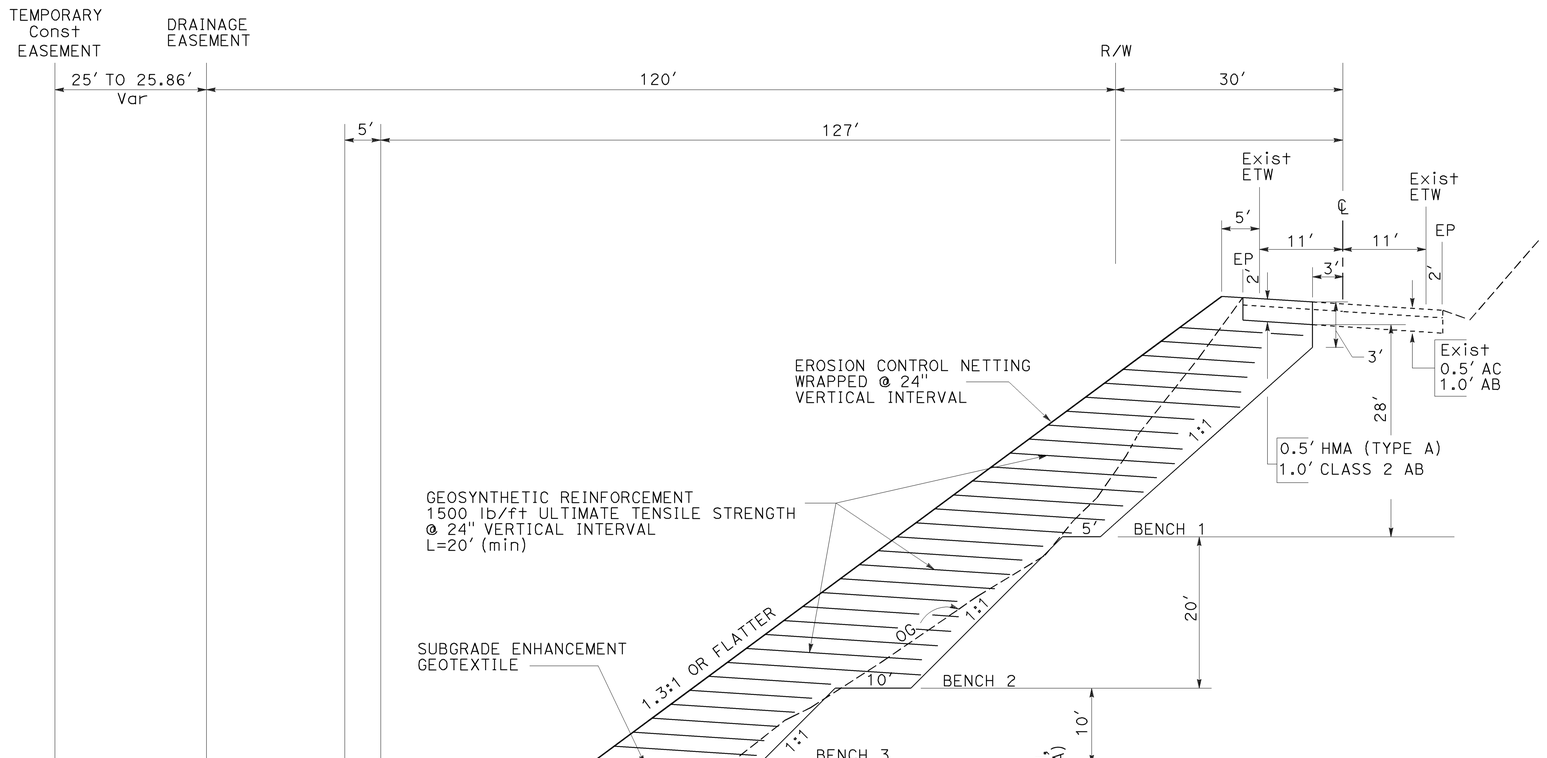

ROUTE 9

STA 101+60 to 102+60

AS BUILT
(NO CORRECTIONS ON THIS SHEET)
CONTRACT No. 04-0G4014
C.C.A. DATE 11/03/2010
R.E. NAME N Patel

TYPICAL CROSS SECTIONS

NO SCALE

X-1

STATE OF CALIFORNIA - DEPARTMENT OF TRANSPORTATION
Caltrans
06-DESIGN

REVISED BY	DATE REVISED

CALCULATED-DESIGNED BY: UDAYA SHANKAR
CHECKED BY: DAVID VELAZCO
FUNCTIONAL SUPERVISOR: GURBHAY BRAR

LAST REVISION DATE PLOTTED => 15-FEB-2011
05-06-10 TIME PLOTTED => 13:56

BORDER LAST REVISED 4/11/2008

RELATIVE BORDER SCALE IS IN INCHES 0 1 2 3

USERNAME => s132175
DGN FILE => 40g401ca001.asb

CU 06222

EA 0G4011

Dist	COUNTY	ROUTE	POST MILES TOTAL PROJECT	SHEET No.	TOTAL SHEETS
04	SCl	9	4.6	3	25

Udaya Y. Shankar 04-12-10
REGISTERED CIVIL ENGINEER DATE

6-7-10
PLANS APPROVAL DATE

REGISTERED PROFESSIONAL ENGINEER — UDAYA Y. SHANKAR No. 71268 Exp 12/31/11 CIVIL — STATE OF CALIFORNIA

THE STATE OF CALIFORNIA OR ITS OFFICERS OR AGENTS SHALL NOT BE RESPONSIBLE FOR THE ACCURACY OR COMPLETENESS OF SCANNED COPIES OF THIS PLAN SHEET.

NOTES:

1. FOR COMPLETE RIGHT OF WAY, SEE RIGHT OF WAY RECORD MAPS AT DISTRICT OFFICE.
2. FOR CROSS SECTIONS A-A AND B-B, SEE CONSTRUCTION DETAIL C-2.
3. THE EXACT LOCATION OF THE TEMPORARY REINFORCED SILT FENCE WILL BE DETERMINED BY THE PLANE OF ORDINARY HIGH WATER AND THE ENGINEER IN THE FIELD.

LEGEND

RSP (1/2 TON, METHOD A)

RSP (1 TON, METHOD A)

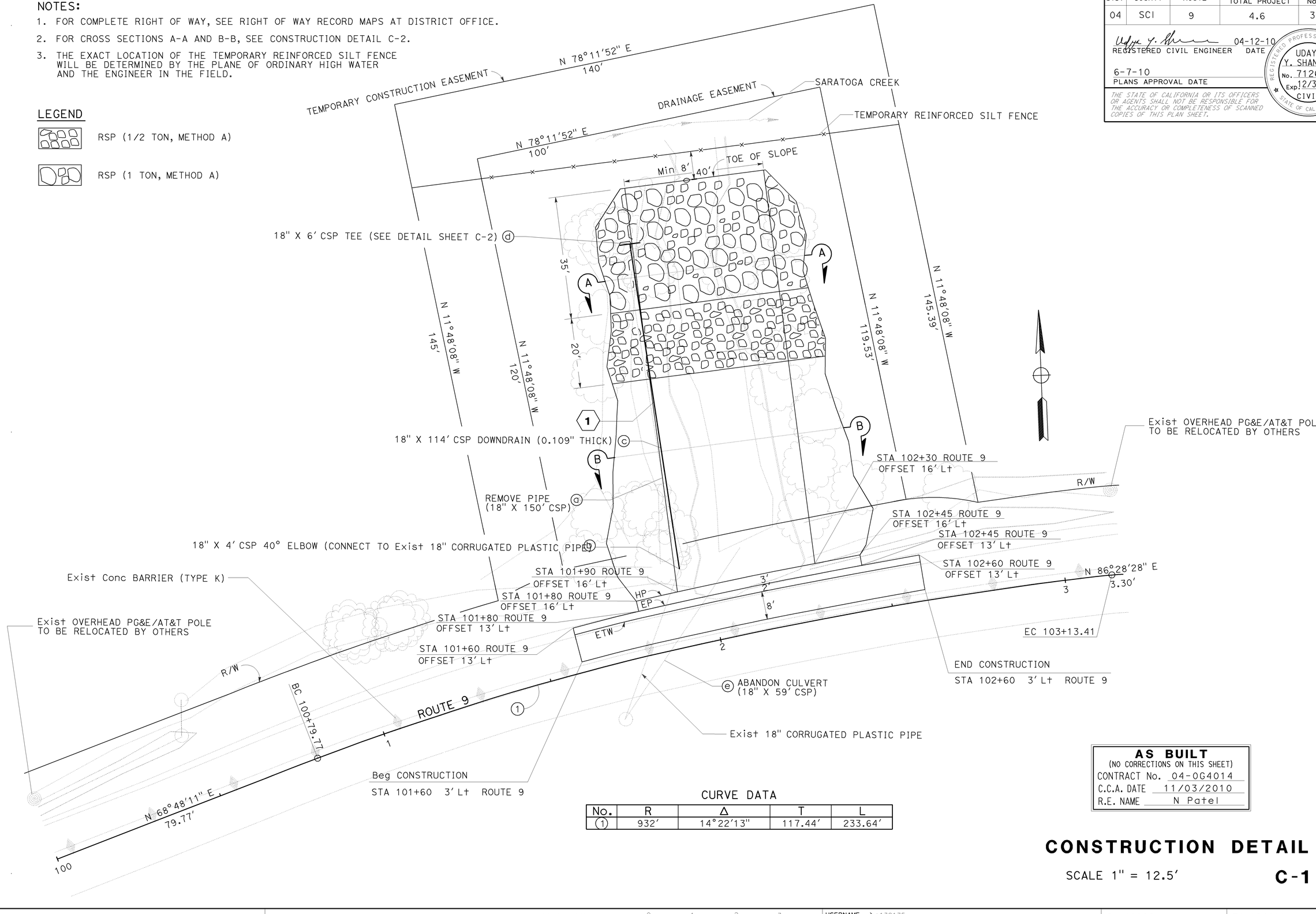

CURVE DATA

No.	R	Δ	T	L
(1)	932'	14°22'13"	117.44'	233.64'

AS BUILT
(NO CORRECTIONS ON THIS SHEET)
CONTRACT No. 04-0G4014
C.C.A. DATE 11/03/2010
R.E. NAME N Patel

CONSTRUCTION DETAIL

SCALE 1" = 12.5'

C-1

REVISED BY | DATE REVISED
UDAYA SHANKAR | DAVID VELAZCO
CALCULATED-DESIGNED BY | CHECKED BY
FUNCTIONAL SUPERVISOR: GURBHAY BRAR
STATE OF CALIFORNIA - DEPARTMENT OF TRANSPORTATION
06-DESIGN
Caltrans

LAST REVISION | DATE PLOTTED => 15-FEB-2011
05-05-10 | TIME PLOTTED => 13:58

BORDER LAST REVISED 4/11/2008 | RELATIVE BORDER SCALE IS IN INCHES 0 1 2 3 | USERNAME => s132175 DGN FILE => 40g401ga001.asb | CU 06222 | EA 0G4011

Dist	COUNTY	ROUTE	POST MILES TOTAL PROJECT	SHEET No.	TOTAL SHEETS
04	SCI	9	4.6	4	25

Udaya Y. Shankar 04-12-10
REGISTERED CIVIL ENGINEER DATE

6-7-10
PLANS APPROVAL DATE

REGISTERED PROFESSIONAL ENGINEER — UDAYA Y. SHANKAR No. 71268 Exp 12/31/11 CIVIL — STATE OF CALIFORNIA

THE STATE OF CALIFORNIA OR ITS OFFICERS OR AGENTS SHALL NOT BE RESPONSIBLE FOR THE ACCURACY OR COMPLETENESS OF SCANNED COPIES OF THIS PLAN SHEET.

LEGEND

RSP (1 TON, METHOD A)

RSP (BACKING No. 1, METHOD B)

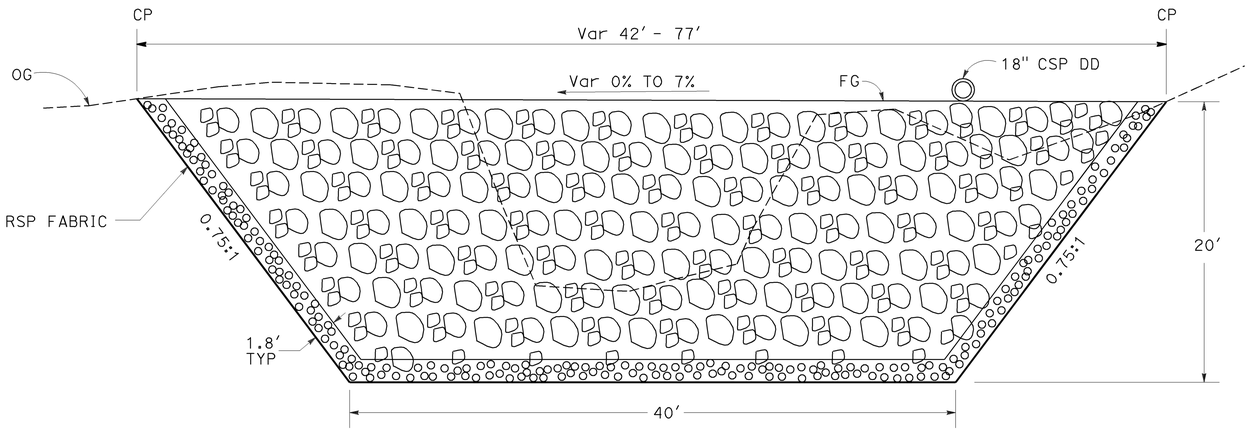

SECTION A-A

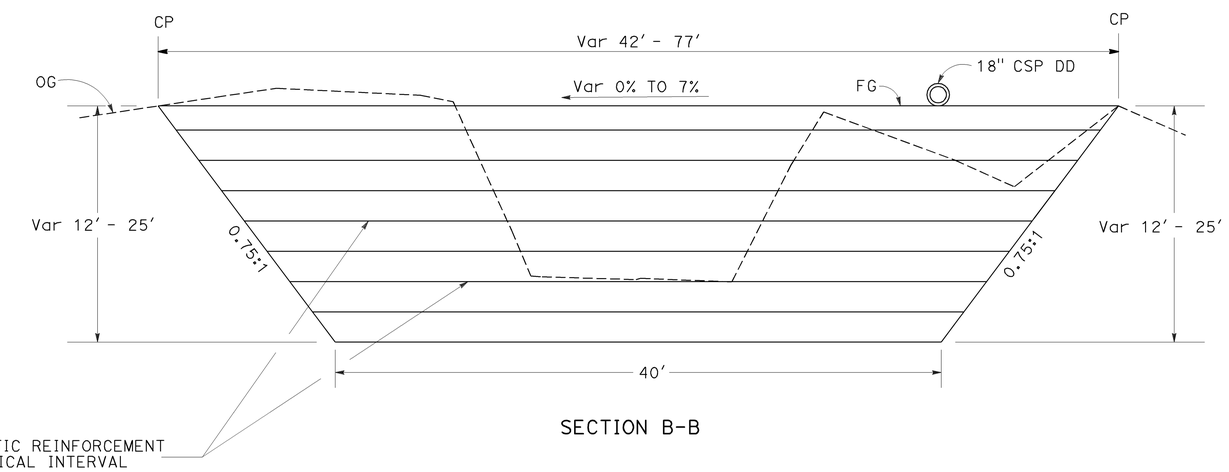

SECTION B-B

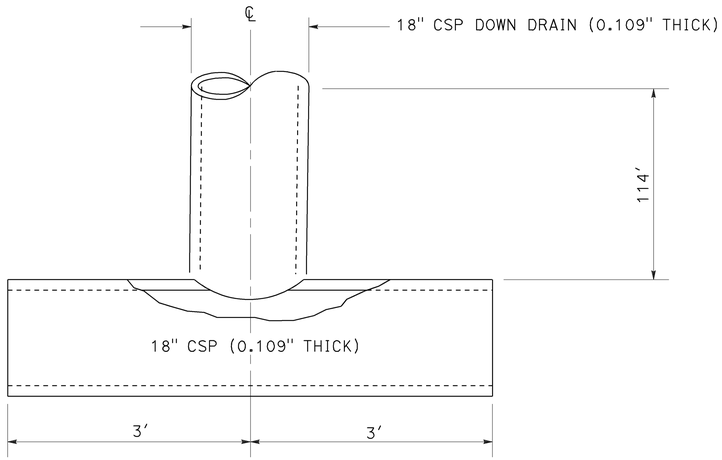

TEE SECTION DETAIL

AS BUILT
(NO CORRECTIONS ON THIS SHEET)
CONTRACT No. 04-0G4014
C.C.A. DATE 11/03/2010
R.E. NAME N Patel

CONSTRUCTION DETAIL

NO SCALE

C-2

CALCULATED-DESIGNED BY	CHECKED BY	REVISED BY	DATE REVISED
UDAYA SHANKAR	DAVID VELAZCO		

FUNCTIONAL SUPERVISOR: GURBHAY BRAR

STATE OF CALIFORNIA - DEPARTMENT OF TRANSPORTATION
06-DESIGN
Caltrans®

LAST REVISION | DATE PLOTTED => 15-FEB-2011
05-06-10 | TIME PLOTTED => 13:59

Dist	COUNTY	ROUTE	POST MILES TOTAL PROJECT	SHEET No.	TOTAL SHEETS
04	SCI	9	4.6	5	25

LICENSED LANDSCAPE ARCHITECT

6-7-10
PLANS APPROVAL DATE

LICENSED LANDSCAPE ARCHITECT
Laurie J. Smith No. 4966
Signature
8-31-10
Renewal Date
5-10-10
Date
STATE OF CALIFORNIA

THE STATE OF CALIFORNIA OR ITS OFFICERS OR AGENTS SHALL NOT BE RESPONSIBLE FOR THE ACCURACY OR COMPLETENESS OF SCANNED COPIES OF THIS PLAN SHEET.

NOTE:
FOR COMPLETE RIGHT OF WAY AND ACCURATE ACCESS DATA, SEE RIGHT OF WAY RECORD MAPS AT DISTRICT OFFICE.

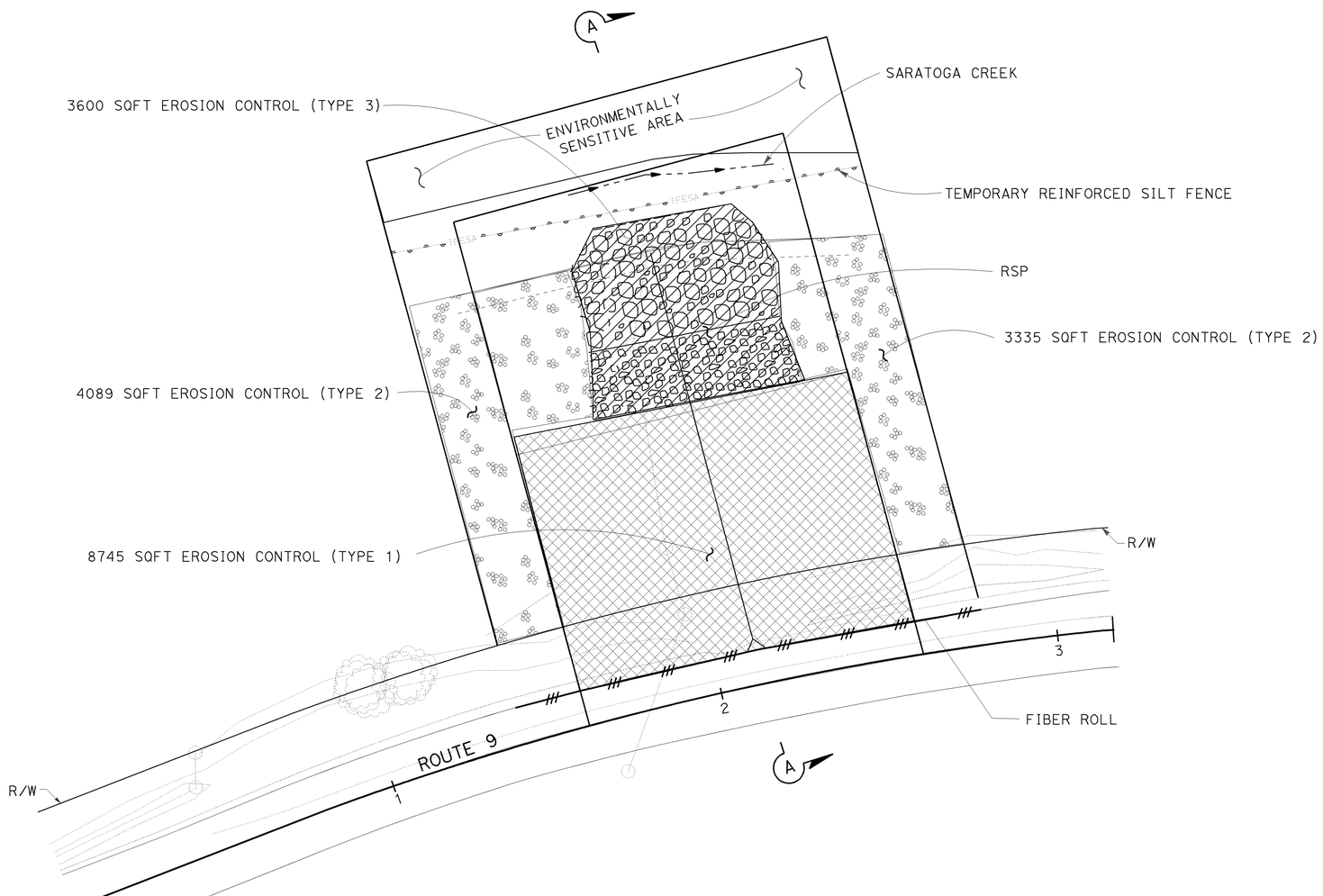

LEGEND

EROSION CONTROL (TYPE 1)
EROSION CONTROL (COMPOST BLANKET)
ROLLED EROSION CONTROL PRODUCT (NETTING)
EROSION CONTROL (HYDROSEED)

EROSION CONTROL (TYPE 2)
EROSION CONTROL (COMPOST BLANKET)
EROSION CONTROL (HYDROSEED)

EROSION CONTROL (TYPE 3)
LOCAL TOPSOIL
EROSION CONTROL (COMPOST BLANKET)
EROSION CONTROL (HYDROSEED)

TEMPORARY REINFORCED SILT FENCE
FIBER ROLL
SLOPE DIRECTION

AS BUILT
(NO CORRECTIONS ON THIS SHEET)
CONTRACT No. 04-0G4014
C.C.A. DATE 11/03/2010
R.E. NAME N Patel

EROSION CONTROL PLAN

SCALE: 1" = 20'

EC-1

THIS PLAN ACCURATE FOR EROSION CONTROL WORK ONLY.

STATE OF CALIFORNIA - DEPARTMENT OF TRANSPORTATION
Caltrans® WATER QUALITY

SENIOR LANDSCAPE ARCHITECT: DAVID W. YAM
CALCULATED-DESIGNED BY: VIRGIL FRANCISCO
CHECKED BY: LAURIE J SMITH
REVISED BY
DATE REVISED

LAST REVISION 05-17-10
DATE PLOTTED => 15-FEB-2011
TIME PLOTTED => 14:00

Dist	COUNTY	ROUTE	POST MILES TOTAL PROJECT	SHEET No.	TOTAL SHEETS
04	SCI	9	4.6	6	25

LICENSED LANDSCAPE ARCHITECT

6-7-10
PLANS APPROVAL DATE

LICENSED LANDSCAPE ARCHITECT
Laurie J. Smith No. 1966
Signature
8-31-10
Renewal Date
5-10-10
Date
STATE OF CALIFORNIA

THE STATE OF CALIFORNIA OR ITS OFFICERS OR AGENTS SHALL NOT BE RESPONSIBLE FOR THE ACCURACY OR COMPLETENESS OF ELECTRONIC COPIES OF THIS PLAN SHEET.

EROSION CONTROL QUANTITIES

SHEET No.	EROSION CONTROL TYPE	EROSION CONTROL (COMPOST BLANKET)	ROLLED EROSION CONTROL PRODUCT (NETTING)	EROSION CONTROL (HYDROSEED)	FIBER ROLLS	LOCAL TOPSOIL (N)
		CY	SQFT	SQFT	LF	CY
EC-1	1	14	8,745	8,745	300	-
EC-1	2	12	-	7,424	-	-
EC-1	3	6	-	3,600	-	134
TOTAL		32	8,745	19,769	300	-

(N) NOT A SEPARATE PAY ITEM, FOR INFORMATION ONLY.

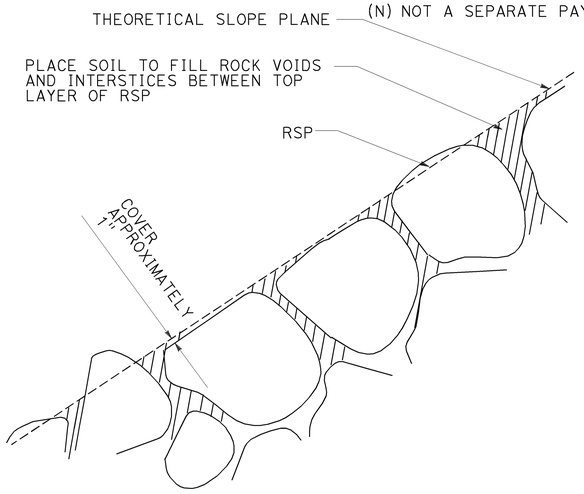

SOIL PLACEMENT ON ROCK SLOPE PROTECTION

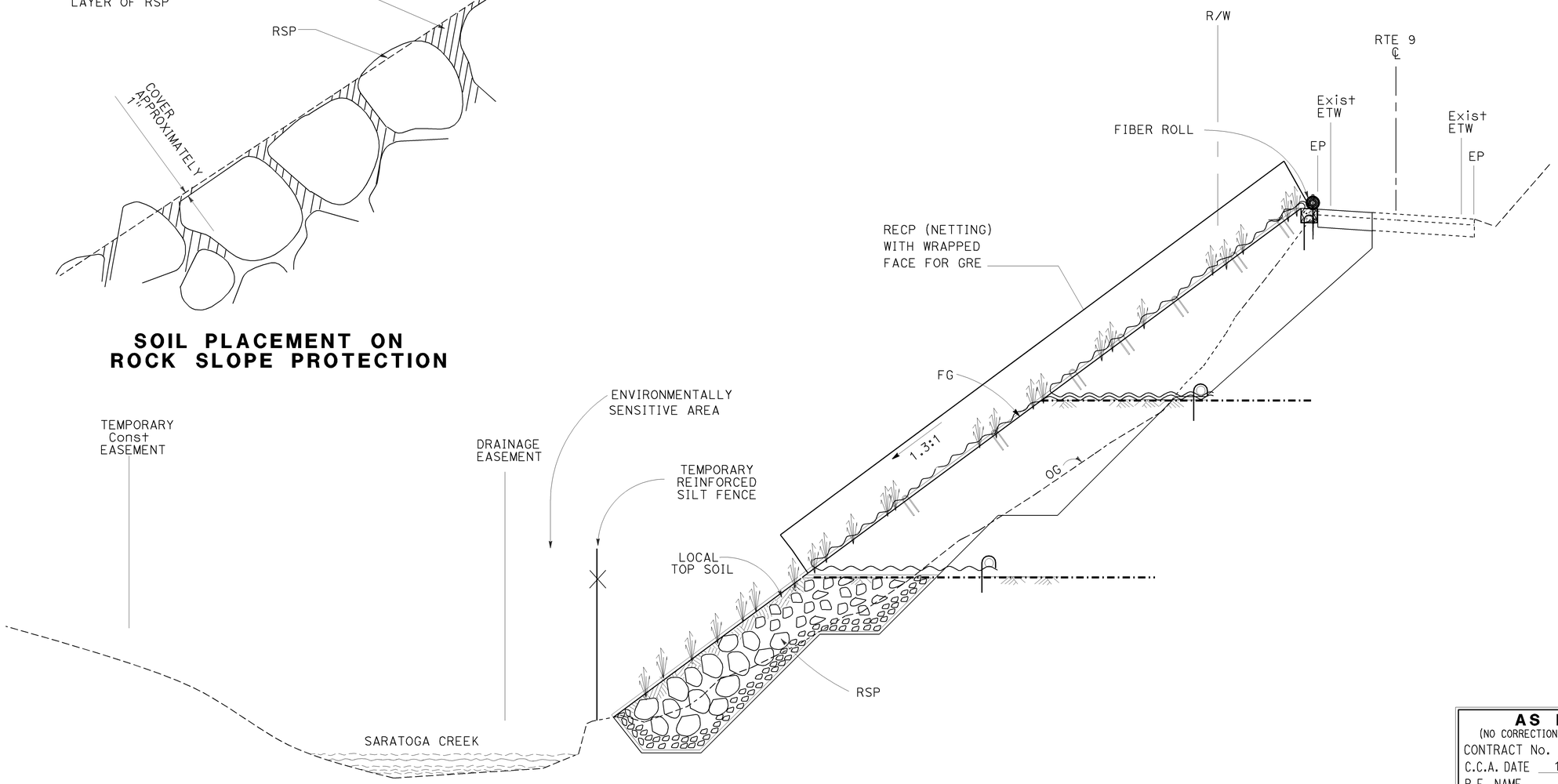

SECTION A-A Typ
Sta 101+70 to 102+42

AS BUILT
(NO CORRECTIONS ON THIS SHEET)
CONTRACT No. 04-0G4014
C.C.A. DATE 11/03/2010
R.E. NAME N Patel

EROSION CONTROL DETAILS

NO SCALE

ECD-1

STATE OF CALIFORNIA - DEPARTMENT OF TRANSPORTATION
Caltrans
WATER QUALITY

SENIOR LANDSCAPE ARCHITECT: DAVID W. YAM
CALCULATED-DESIGNED BY: LAURIE J SMITH
CHECKED BY: ALEX MC DONALD
REVISED BY
DATE REVISED

LAST REVISION 05-06-10
DATE PLOTTED => 15-FEB-2011
TIME PLOTTED => 14:01

Dist	COUNTY	ROUTE	POST MILES TOTAL PROJECT	SHEET No.	TOTAL SHEETS
04	SCI	9	4.6	7	25

LICENSED LANDSCAPE ARCHITECT

6-7-10
PLANS APPROVAL DATE

THE STATE OF CALIFORNIA OR ITS OFFICERS OR AGENTS SHALL NOT BE RESPONSIBLE FOR THE ACCURACY OR COMPLETENESS OF SCANNED COPIES OF THIS PLAN SHEET.

LICENSED LANDSCAPE ARCHITECT — Laurie J. Smith No. 4964 — Signature — 8-31-10 Renewal Date — 5-10-10 Date — STATE OF CALIFORNIA

NOTES

* SEE GEOSYNTHETIC REINFORCED EMBANKMENT CONSTRUCTION DETAILS.

1. INSTALL ROLLED EROSION CONTROL PRODUCT (NETTING) (TYPE A) IN CONJUNCTION WITH INSTALLATION OF GEOSYNTHETIC REINFORCEMENT.

2. ANCHOR ROLLED EROSION CONTROL PRODUCT (NETTING) (TYPE A) THROUGH GEOSYNTHETIC REINFORCEMENT AT ALL LOCATIONS.

3. STAPLE RECP (NETTING) (TYPE A) AS NECESSARY TO ENSURE CONTACT WITH GROUND PLANE.

4. DIMENSIONS MAY VARY TO MATCH FIELD CONDITIONS.

ABBREVIATION:
RECP = ROLLED EROSION CONTROL PRODUCT

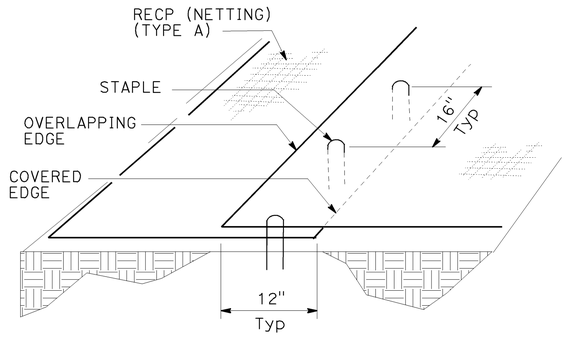

NETTING OVERLAP AND STAPLE PATTERN

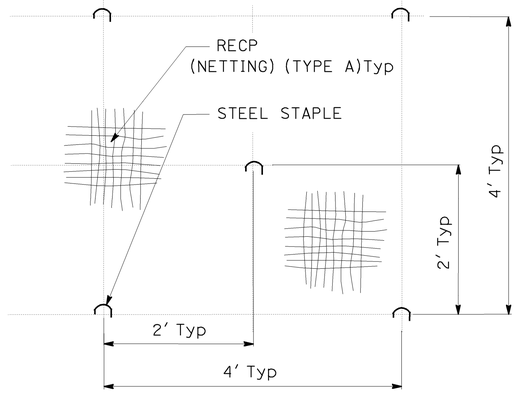

STAPLE PATTERN

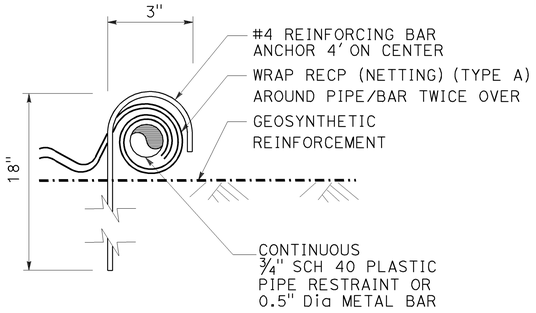

SECTION

FABRIC ANCHOR DETAIL

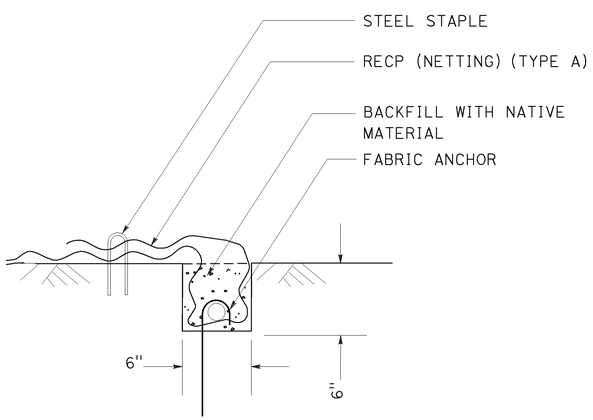

SECTION

KEY TRENCH DETAIL AT GEOSYNTHETIC REINFORCED EMBANKMENT

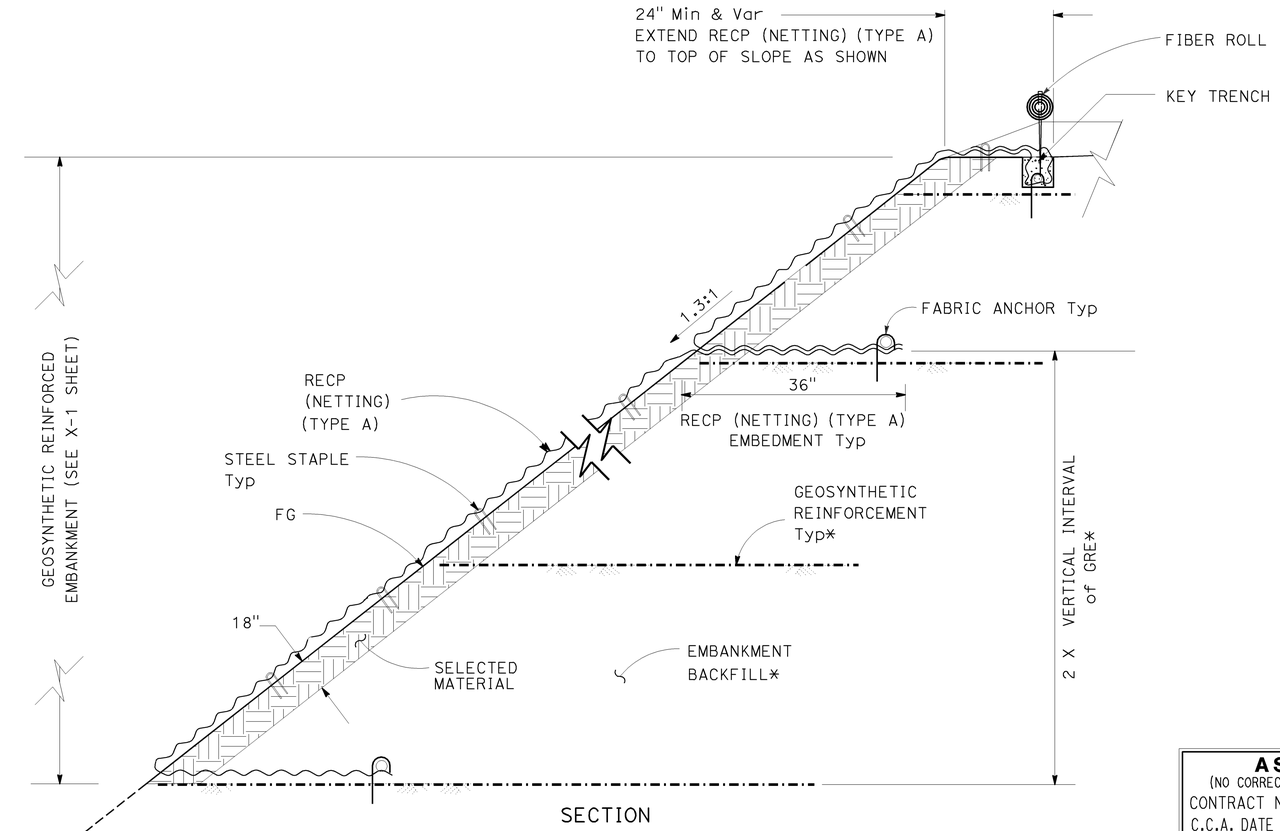

SECTION

RECP (NETTING (TYPE A) WITH WRAPPED FACE FOR GEOSYNTHETIC REINFORCED EMBANKMENT

AS BUILT
(NO CORRECTIONS ON THIS SHEET)
CONTRACT No. 04-0G4014
C.C.A. DATE 11/03/2010
R.E. NAME N Patel

EROSION CONTROL DETAILS

NO SCALE

ECD-2

STATE OF CALIFORNIA - DEPARTMENT OF TRANSPORTATION
Caltrans
WATER QUALITY
SENIOR LANDSCAPE ARCHITECT: DAVID W. YAM
CALCULATED-DESIGNED BY: LAURIE J SMITH
CHECKED BY: ALEX MC DONALD
REVISED BY
DATE REVISED

LAST REVISION 05-17-10
DATE PLOTTED => 15-FEB-2011
TIME PLOTTED => 14:02

Dist	COUNTY	ROUTE	POST MILES TOTAL PROJECT	SHEET No.	TOTAL SHEETS
04	SCl	9	4.6	8	25

Uday Y. Shankar 04-12-10
REGISTERED CIVIL ENGINEER DATE

6-7-10
PLANS APPROVAL DATE

REGISTERED PROFESSIONAL ENGINEER
UDAYA Y. SHANKAR
No. 71268
Exp 12/31/11
CIVIL
STATE OF CALIFORNIA

THE STATE OF CALIFORNIA OR ITS OFFICERS OR AGENTS SHALL NOT BE RESPONSIBLE FOR THE ACCURACY OR COMPLETENESS OF SCANNED COPIES OF THIS PLAN SHEET.

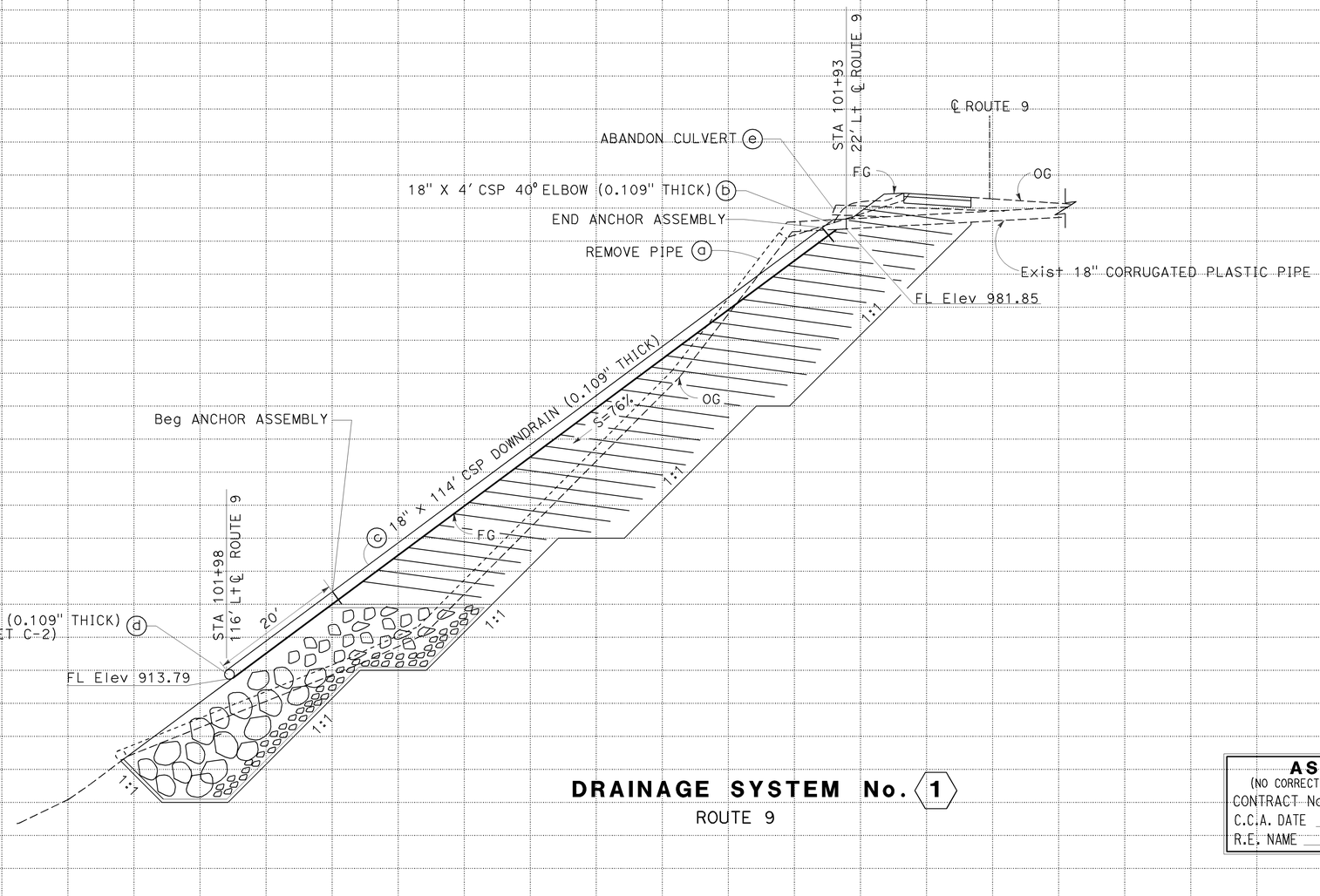

DRAINAGE SYSTEM No. 1
ROUTE 9

AS BUILT
(NO CORRECTIONS ON THIS SHEET)
CONTRACT No. 04-0G4014
C.C.A. DATE 11/03/2010
R.E. NAME N Patel

DRAINAGE PROFILE
SCALE: Horiz 1" = 10'
Vert 1" = 10'
DP-1

Station.
CY Exc
Emb

REVISED BY | DATE REVISED
DAVID VELAZCO | UDAYA SHANKAR
CALCULATED-DESIGNED BY | CHECKED BY
FUNCTIONAL SUPERVISOR: GURBHAY BRAR
STATE OF CALIFORNIA - DEPARTMENT OF TRANSPORTATION
06-DESIGN
Caltrans

LAST REVISION 05-06-10 | DATE PLOTTED => 15-FEB-2011 | TIME PLOTTED => 14:03

BORDER LAST REVISED 4/11/2008
RELATIVE BORDER SCALE IS IN INCHES 0 1 2 3
USERNAME => s132175
DGN FILE => 40g401ib001.asb
CU 06222
EA 0G4011

Dist	COUNTY	ROUTE	POST MILES TOTAL PROJECT	SHEET No.	TOTAL SHEETS
04	SCl	9	4.6	9	25

REGISTERED CIVIL ENGINEER — DATE 05-10-10

6-7-10
PLANS APPROVAL DATE

REGISTERED PROFESSIONAL ENGINEER — MAZIN H. AL-ALI — No. 65523 — Exp 9/30/11 — CIVIL — STATE OF CALIFORNIA

THE STATE OF CALIFORNIA OR ITS OFFICERS OR AGENTS SHALL NOT BE RESPONSIBLE FOR THE ACCURACY OR COMPLETENESS OF SCANNED COPIES OF THIS PLAN SHEET.

NOTE:

SIGN LOCATIONS SHOWN ARE APPROXIMATE ONLY. EXACT TIMING OF REMOVAL AND LOCATIONS TO BE DETERMINED BY THE ENGINEER.

STATIONARY MOUNTED CONSTRUCTION AREA SIGNS

SIGN No.	SIGN CODE	PANEL SIZE in X in	SIGN MESSAGE	No. OF POST	POST SIZE in X in	NUMBER OF SIGNS
A	W20-1	36 x 36	ROAD WORK AHEAD	1	4 x 6	2
B	G20-2	36 x 18	END ROAD WORK	1	4 x 4	2

PAVEMENT DELINEATION *

LOCATION STA TO STA	SIDE	DETAIL No.	THERMOPLASTIC TRAFFIC STRIPE 4" YELLOW	THERMOPLASTIC TRAFFIC STRIPE 4" WHITE	REMOVE THERMO-PLASTIC TRAFFIC STRIPE 4" YELLOW	PAVEMENT MARKER (RETRO-REFLECTIVE)	REMOVE PAVEMENT MARKER	REMOVE THERMOPLASTIC PAVEMENT MARKING DESCRIPTION	SQFT
			LF	LF	LF	EA	EA		
99+20 TO 104+75	℄	22	555		555	23	23	LIMIT LINE	22
99+20 TO 104+75	L+	27B		555					
TOTAL			1110		555	23	23		22

* SEE TRAFFIC HANDLING AND DELINEATION PLAN FOR LOCATIONS

CONSTRUCTION AREA SIGNS * (TRAFFIC HANDLING)

SIGN CODE	SIGN MESSAGE	REMOVE ROADSIDE SIGN
W20-4 (MOD)	SINGLE LANE AHEAD	2
W3-4(MOD)	PREPARE TO STOP	2
W3-3	TRAFFIC SIGNAL SYMBOL	2
R10-6(MOD)	STOP ALL VEHICLES ON RED	2
TOTAL		8

REMOVE CHANNELIZERS *

SHEET No.	EA
TH-1	8
TOTAL	8

CHANNELIZER * (SURFACE MOUNTED)

SHEET No.	EA
TH-1	13
TOTAL	13

TEMPORARY * CRASH CUSHION MODULE

SHEET No.	EA
TH-1	11
TOTAL	11

REMOVE CRASH CUSHION * (SAND FILLED)

SHEET No.	EA
TH-1	22
TOTAL	22

REMOVE CONCRETE BARRIER * (TYPE K)

SHEET No.	LF
TH-1	480
TOTAL	480

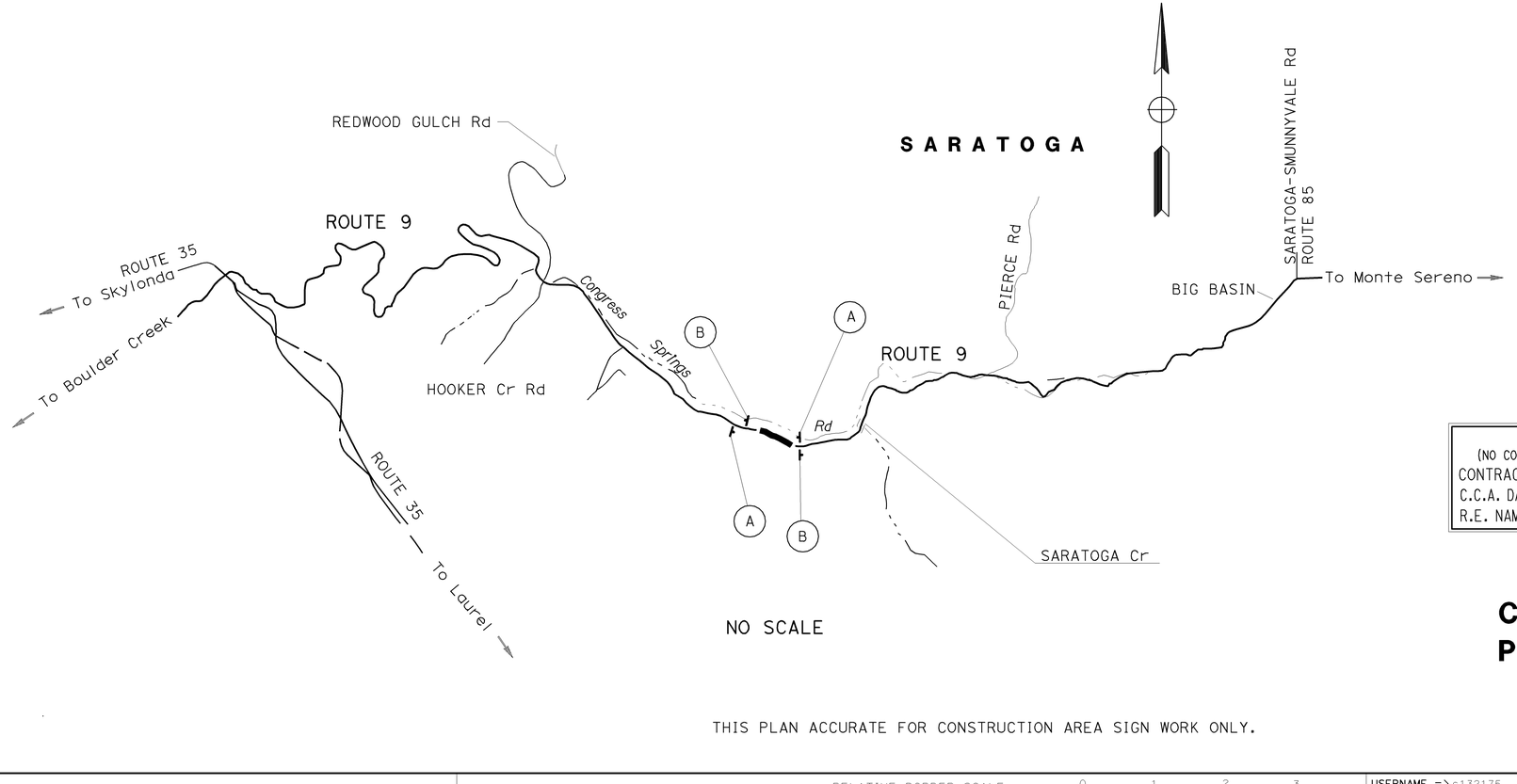

THIS PLAN ACCURATE FOR CONSTRUCTION AREA SIGN WORK ONLY.

AS BUILT
(NO CORRECTIONS ON THIS SHEET)
CONTRACT No. 04-0G4014
C.C.A. DATE 11/03/2010
R.E. NAME N Patel

CONSTRUCTION AREA SIGNS AND PAVEMENT DELINEATION QUANTITIES

CS-1

REVISED BY | DATE REVISED
KAMRUL KHAN | M. AL-ALI
CALCULATED-DESIGNED BY | CHECKED BY
FUNCTIONAL SUPERVISOR: MOHAMMED QATAMI
STATE OF CALIFORNIA - DEPARTMENT OF TRANSPORTATION
Caltrans® 06-TRAFFIC DESIGN

LAST REVISION | DATE PLOTTED => 15-FEB-2011 | 05-10-10 | TIME PLOTTED => 14:04

BORDER LAST REVISED 4/11/2008 | RELATIVE BORDER SCALE IS IN INCHES 0 1 2 3 | USERNAME => s132175 | DGN FILE => 60A9701a001.dgn | CU 06386 | EA 0G4011

Dist	COUNTY	ROUTE	POST MILES TOTAL PROJECT	SHEET No.	TOTAL SHEETS
04	SCl	9	4.6	10	25

Udaya Y. Shankar 04-12-10
REGISTERED CIVIL ENGINEER DATE

6-7-10
PLANS APPROVAL DATE

REGISTERED PROFESSIONAL ENGINEER — UDAYA Y. SHANKAR No. 71268 Exp. 12/31/11 CIVIL — STATE OF CALIFORNIA

THE STATE OF CALIFORNIA OR ITS OFFICERS OR AGENTS SHALL NOT BE RESPONSIBLE FOR THE ACCURACY OR COMPLETENESS OF SCANNED COPIES OF THIS PLAN SHEET.

LEGEND

- Exist ROADSIDE SIGN
- DIRECTION OF TRAFFIC
- Exist Conc BARRIER (TYPE K)
- CHANNELIZERS (SURFACED MOUNTED) 20' SPACING
- CONSTRUCTION AREA
- (XX) THERMOPLASTIC TRAFFIC STRIPE No.

NOTES:

1. ALL LOCATIONS SHOWN ARE APPROXIMATE ONLY. EXACT LOCATIONS TO BE DETERMINED BY THE ENGINEER.
2. EXACT TIMING OF SIGN REMOVAL TO BE DETERMINED BY THE ENGINEER.

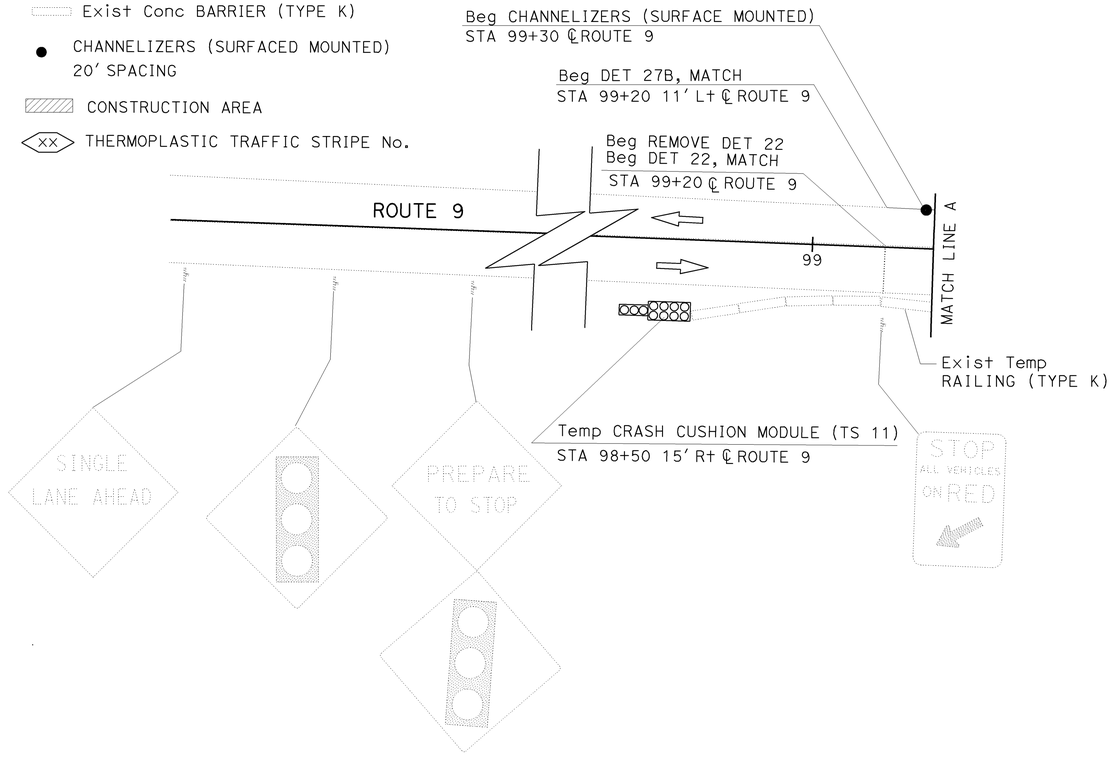

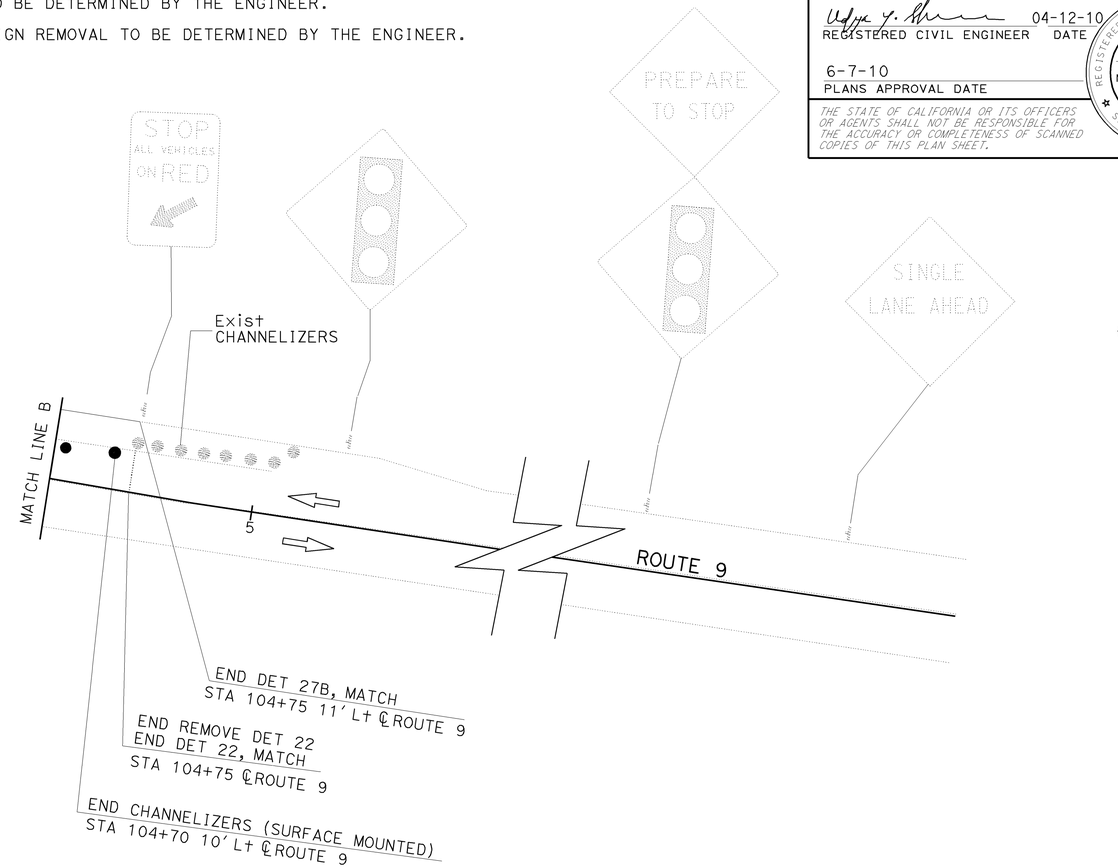

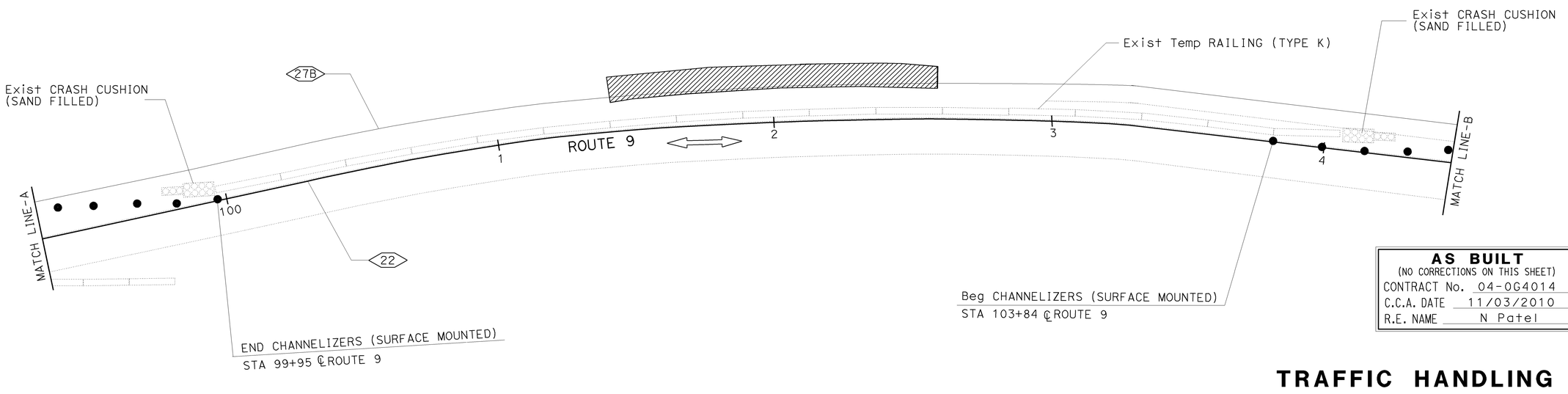

AS BUILT
(NO CORRECTIONS ON THIS SHEET)
CONTRACT No. 04-0G4014
C.C.A. DATE 11/03/2010
R.E. NAME N Patel

THIS PLAN ACCURATE FOR TRAFFIC HANDLING ONLY.

TRAFFIC HANDLING AND DELINEATION PLAN

NO SCALE

TH-1

STATE OF CALIFORNIA - DEPARTMENT OF TRANSPORTATION
Caltrans®
06-TRAFFIC DESIGN
FUNCTIONAL SUPERVISOR: GURBHAY BRAR
CALCULATED-DESIGNED BY: UDAYA SHANKAR
CHECKED BY: DAVID VELAZCO
REVISED BY
DATE REVISED

LAST REVISION DATE PLOTTED => 15-FEB-2011
TIME PLOTTED => 14:06
05-10-10

BORDER LAST REVISED 4/11/2008
RELATIVE BORDER SCALE IS IN INCHES 0 1 2 3
USERNAME => s132175
DGN FILE => 60A970md001.dgn
CU 06386
EA 0G4011

Dist	COUNTY	ROUTE	POST MILES TOTAL PROJECT	SHEET No.	TOTAL SHEETS
04	SCI	9	4.6	11	25

REGISTERED CIVIL ENGINEER — DATE: 04-12-10

6-7-10
PLANS APPROVAL DATE

REGISTERED PROFESSIONAL ENGINEER — UDAYA Y. SHANKAR No. 71268 Exp 12/31/11 CIVIL — STATE OF CALIFORNIA

THE STATE OF CALIFORNIA OR ITS OFFICERS OR AGENTS SHALL NOT BE RESPONSIBLE FOR THE ACCURACY OR COMPLETENESS OF SCANNED COPIES OF THIS PLAN SHEET.

TEMPORARY WATER POLLUTION CONTROL QUANTITIES

SHEET No.	STATION	LOCATION	TEMPORARY REINFORCED SILT FENCE	TEMPORARY COVER	TEMPORARY DRAINAGE INLET PROTECTION
			LF	SQYD	EA
EC-1	STA 101+40.00 TO STA 102+80.00	Lt	140	1,000	1

ROADWAY QUANTITIES

LOCATION	ROADWAY EXCAVATION	IMPORTED BORROW	SUBGRADE ENHANCEMENT GEOTEXTILE	GEOSYNTHETIC REINFORCEMENT	CLASS 2 AB	HMA (TYPE A)	RSP (1 TON, METHOD A)	RSP (1/2 TON, METHOD A)	RSP FABRIC	RSP (BACKING No. 1, METHOD B)
FROM STA TO STA	CY	CY	SQYD	SQYD	CY	TON	CY	CY	SQYD	CY
101+60 TO 102+60	3330				40	40				
101+80 TO 102+45		1800	250	6500			671	440	800	225
TOTAL	3330	1800	250	6500	40	40	671	440	800	225

DRAINAGE QUANTITIES

DRAINAGE SYSTEM No. ⬡	DRAINAGE UNIT ◯	REMOVE PIPE	18" CSP (.109" THICK)	18" CSP DD (.109" THICK)	ABANDON CULVERT	DESCRIPTION	* LOCATIONS	SHEET No.	DRAINAGE SYSTEM No. ⬡	DRAINAGE UNIT ◯
		LF	LF	LF	LF					
1	a	150				REMOVE Exist 18" PIPE	25' Lt ℄ ROUTE 9 Sta 101+95	C-1	1	a
1	b		4			18" X 4' CSP ELBOW BENT AT 40°	22' Lt ℄ ROUTE 9 Sta 101+93	C-1	1	b
1	c			114		18" CSP DOWNDRAIN (0.109" THICK)	STA 101+93 ROUTE 9	C-1	1	c
1	d		6			18" X 6' CSP TEE SECTION	116' Lt ℄ ROUTE 9 Sta 101+98	C-1	1	d
1	e				59	ABANDON 18" CSP PIPE	19' Lt ℄ ROUTE 9 Sta 102+05	C-1	1	e
TOTAL		150	10	114	59					

* APPROXIMATE LOCATIONS ONLY, EXACT LOCATIONS TO BE DETERMINED BY THE ENGINEER.

AS BUILT
(NO CORRECTIONS ON THIS SHEET)
CONTRACT No. 04-0G4014
C.C.A. DATE 11/03/2010
R.E. NAME N Patel

SUMMARY OF QUANTITIES
Q-1

REVISED BY | DATE REVISED
UDAYA SHANKAR | DAVID VELAZCO
CALCULATED-DESIGNED BY | CHECKED BY
FUNCTIONAL SUPERVISOR: GURBHAY BRAR
STATE OF CALIFORNIA - DEPARTMENT OF TRANSPORTATION
06-DESIGN
Caltrans®

LAST REVISION 05-06-10 | DATE PLOTTED => 15-FEB-2011 | TIME PLOTTED => 14:07

BORDER LAST REVISED 4/11/2008 | RELATIVE BORDER SCALE IS IN INCHES 0 1 2 3 | USERNAME => s132175 | DGN FILE => 40g401pa001.asb | CU 06222 | EA 0G4011

Dist	COUNTY	ROUTE	POST MILES TOTAL PROJECT	SHEET No.	TOTAL SHEETS
04	SCI	9	4.6	12	25

Daniel Thanh Vo 05-10-10
REGISTERED ELECTRICAL ENGINEER DATE

6-7-10
PLANS APPROVAL DATE

REGISTERED PROFESSIONAL ENGINEER — DANIEL THANH VO — No. 17408 — Exp. 9/30/10 — ELECTRICAL — STATE OF CALIFORNIA

THE STATE OF CALIFORNIA OR ITS OFFICERS OR AGENTS SHALL NOT BE RESPONSIBLE FOR THE ACCURACY OR COMPLETENESS OF SCANNED COPIES OF THIS PLAN SHEET.

NOTES:

1. THE CONTRACTOR SHALL MAINTAIN EXISTING TEMPORARY SIGNAL SYSTEM AND RC THE ENTIRE EXISTING EQUIPMENT OF TEMPORARY SIGNAL SYSTEM UNLESS OTHERWISE SHOWN, UPON COMPLETION OF THE WORK REQUIRING TEMPORARY SIGNAL SYSTEM, AS DETERMINED BY THE ENGINEER.
2. RIGHT OF WAY LIMITS ARE INDETERMINATE, AND ARE NOT SHOWN. THE CONTRACTOR MUST CONTACT RIGHT OF WAY ENGINEERING AT THE DISTRICT OFFICE FOR CONDITIONS OF USE PRIOR TO COMMENCING WORK.

LEGEND, SYMBOLS & ABBREVIATIONS:

EXISTING ADVANCE FLASHING BEACON WITH A W3-3 SIGN AND SIGN LIGHTING MOUNTED ON A WOOD POLE.

EXISTING WOOD POLE WITH SIGNAL HEAD (ON MASTARM AND POLE) AND CONDUIT RISER.

EXISTING WOOD POLE WITH 200 W HPS LUMINAIRE (ON MASTARM), SIGNAL HEAD, PPB, R10-6 SIGN AND CONDUIT RISER.

oh — EXISTING OVERHEAD 5/8", 7 STRAND GALVANIZED MESSENGER WIRE WITH CONDUCTORS AS NOTED.

PG&E — PACIFIC GAS AND ELECTRIC.

Ø6 Ø8

PHASE DIAGRAM
STEADY DEMAND SEQUENCE

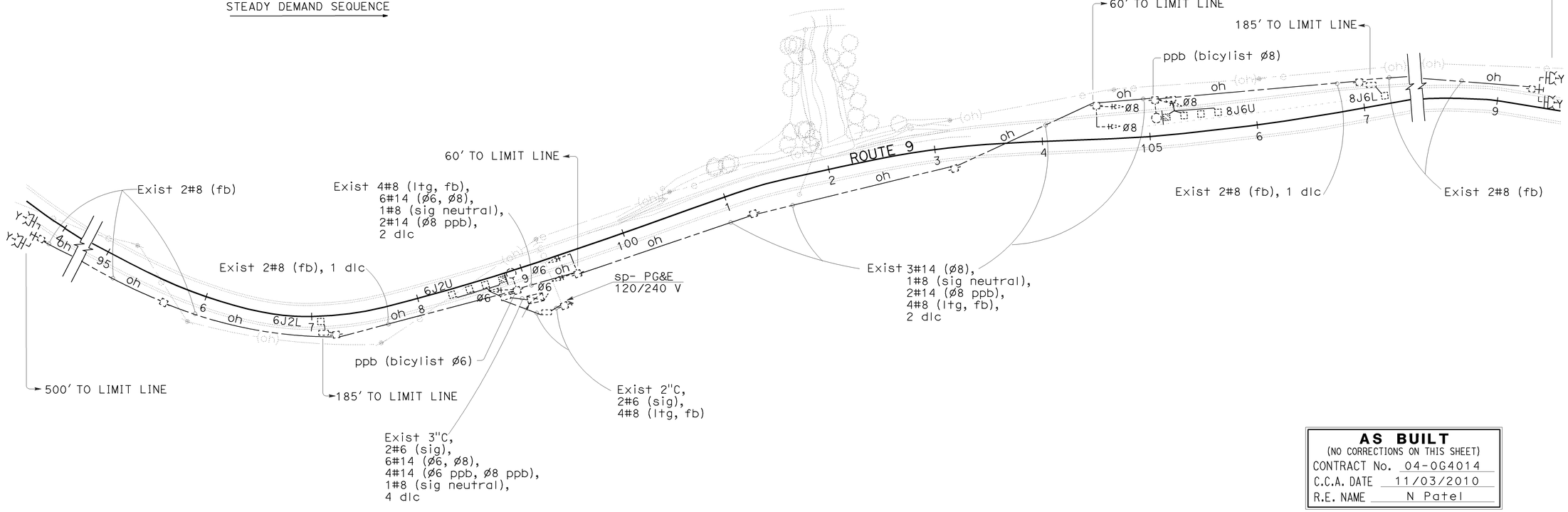

AS BUILT
(NO CORRECTIONS ON THIS SHEET)
CONTRACT No. 04-0G4014
C.C.A. DATE 11/03/2010
R.E. NAME N Patel

EXISTING TEMPORARY SIGNAL SYSTEM

TEMPORARY SIGNAL SYSTEM

SCALE: 1"=50'

E-1

THIS PLAN IS ACCURATE FOR ELECTRICAL WORK ONLY.

STATE OF CALIFORNIA - DEPARTMENT OF TRANSPORTATION
Caltrans® 06-ELECTRICAL DESIGN
FUNCTIONAL SUPERVISOR: ALI BAKHDOUD
CALCULATED-DESIGNED BY: DANIEL VO
CHECKED BY: NORMA GALLEGOS
REVISED BY / DATE REVISED

LAST REVISION 05-4-10
DATE PLOTTED => 15-FEB-2011
TIME PLOTTED => 14:08

BORDER LAST REVISED 4/11/2008
RELATIVE BORDER SCALE IS IN INCHES 0 1 2 3
USERNAME => s132175
DGN FILE => 40g401ua001.asb
CU 06391
EA 0G4011

DIST	COUNTY	ROUTE	POST MILES TOTAL PROJECT	SHEET NO.	TOTAL SHEETS
04	SCl	9	4.6	13	25

Gregory A. Bolzer
LICENSED LANDSCAPE ARCHITECT

April 3, 2009
PLANS APPROVAL DATE

LICENSED LANDSCAPE ARCHITECT Gregory A. Bolzer 2576 Signature 02-28-11 Renewal Date 03-04-09 Date STATE OF CALIFORNIA

The State of California or its officers or agents shall not be responsible for the accuracy or completeness of electronic copies of this plan sheet.

To accompany plans dated 6-7-10

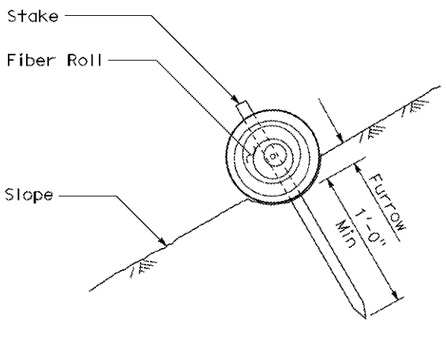

SECTION

FIBER ROLL
(TYPE 1)

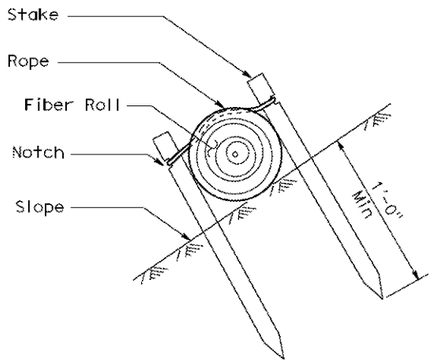

SECTION

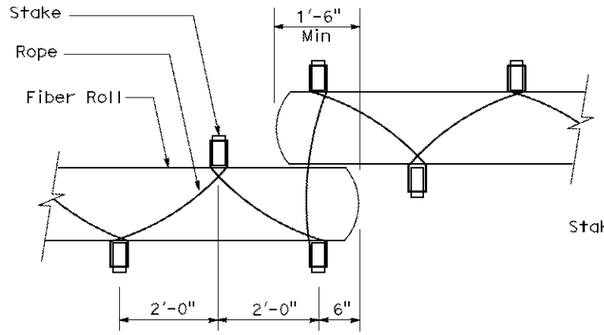

PLAN

FIBER ROLL
(TYPE 2)

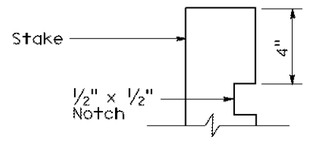

ELEVATION

STAKE NOTCH DETAIL

NOTES:

1. Fiber roll spacing varies depending upon slope inclination.
2. Installations shown in the perspectives are for slope inclination of 10:1 and steeper.

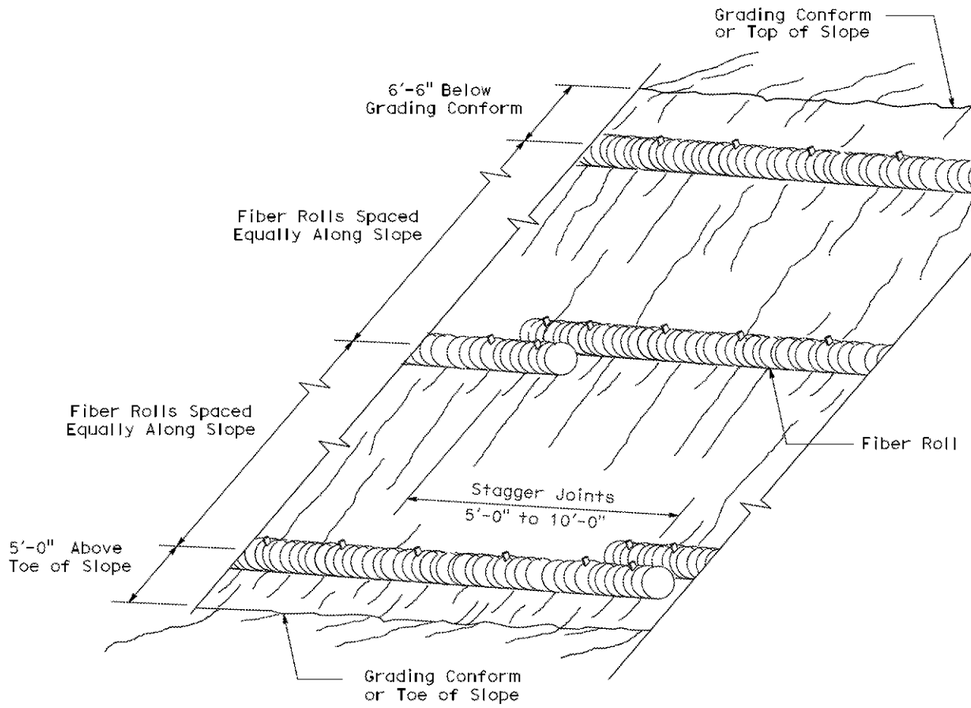

PERSPECTIVE

FIBER ROLL (TYPE 1)

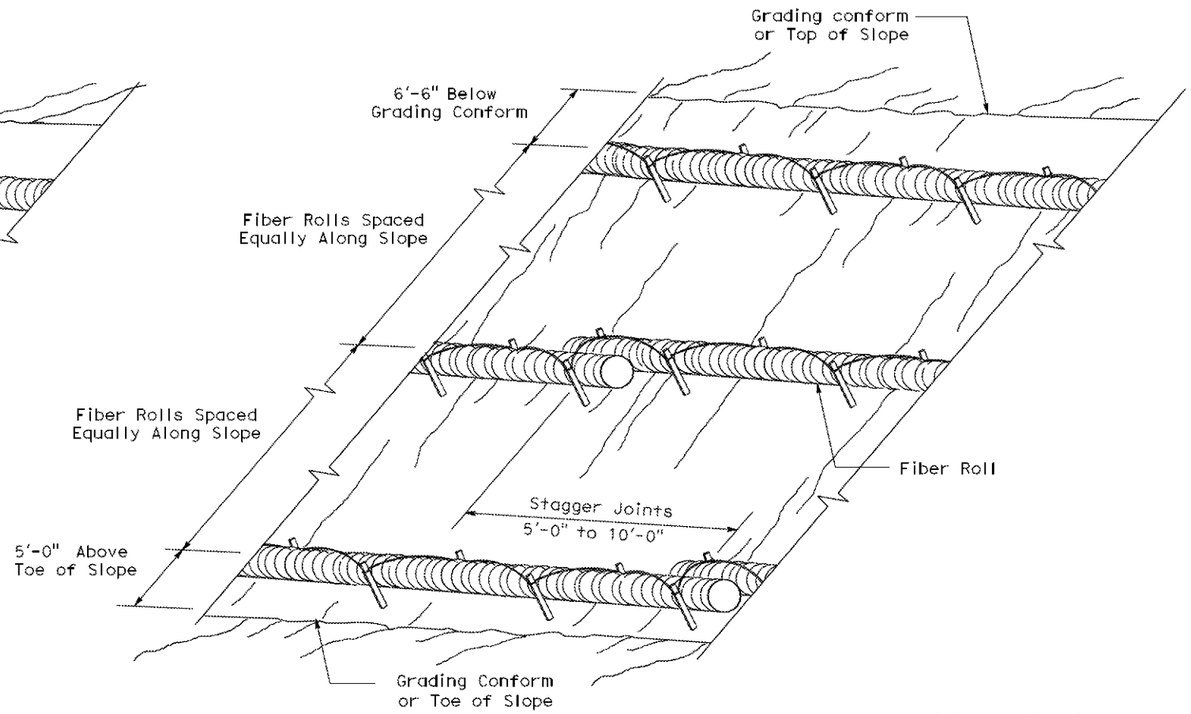

PERSPECTIVE

FIBER ROLL (TYPE 2)

STATE OF CALIFORNIA
DEPARTMENT OF TRANSPORTATION

EROSION CONTROL DETAILS (FIBER ROLL)

NO SCALE

RNSP H51 DATED APRIL 3, 2009 SUPERSEDES NSP H51 DATED DECEMBER 1, 2006
THAT SUPPLEMENTS THE STANDARD PLANS BOOK DATED MAY 2006.

REVISED NEW STANDARD PLAN RNSP H51

2006 REVISED NEW STANDARD PLAN RNSP H51

3-4-09

DIST	COUNTY	ROUTE	POST MILES TOTAL PROJECT	SHEET NO.	TOTAL SHEETS
04	SCl	9	4.6	14	25

LICENSED LANDSCAPE ARCHITECT

June 5, 2009
PLANS APPROVAL DATE

LICENSED LANDSCAPE ARCHITECT — Gregory A. Balzer — Signature — 2-28-11 Renewal Date — 5-14-09 Date — STATE OF CALIFORNIA

The State of California or its officers or agents shall not be responsible for the accuracy or completeness of electronic copies of this plan sheet.

To accompany plans dated 6-7-10

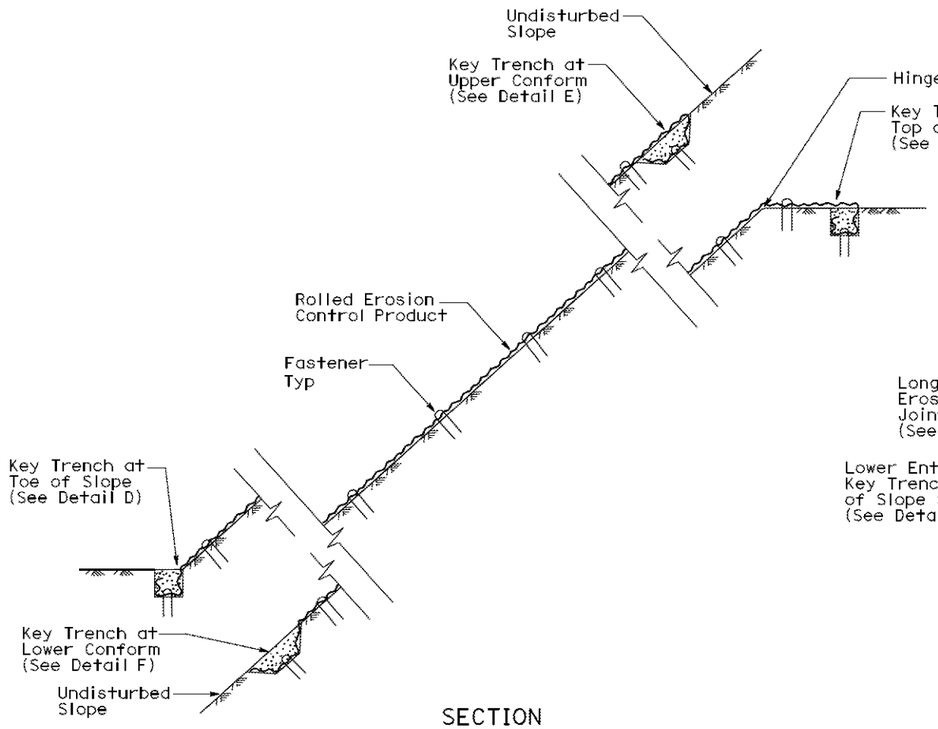

SECTION

ROLLED EROSION CONTROL PRODUCT ON SLOPE WITH VARIOUS KEY ENTRENCHMENTS

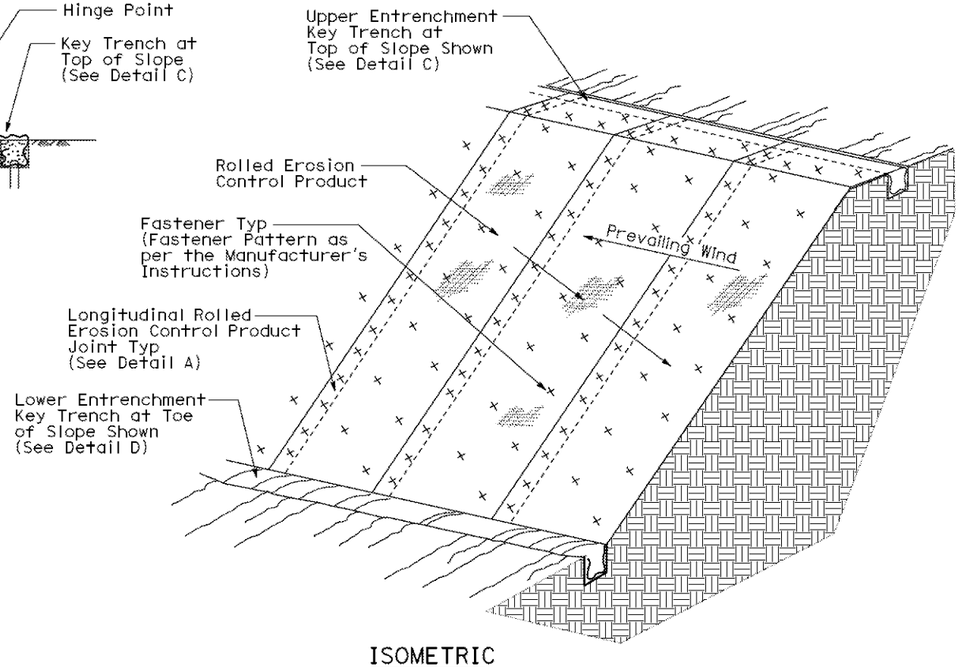

ISOMETRIC

ROLLED EROSION CONTROL PRODUCT ON SLOPE

NOTE:

1. Fiber Roll/Compost Sock shown for reference purposes only.
2. If transverse rolled erosion control product joints are required on slopes, see Detail B.

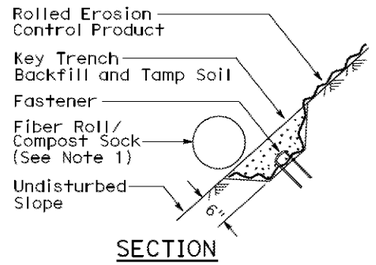

SECTION

DETAIL F KEY TRENCH AT LOWER CONFORM

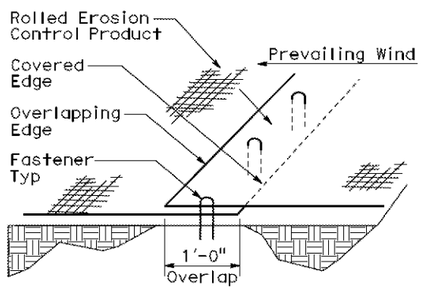

PERSPECTIVE

DETAIL A LONGITUDINAL ROLLED EROSION CONTROL PRODUCT JOINT

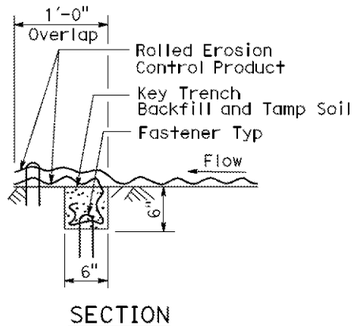

SECTION

DETAIL B TRANSVERSE ROLLED EROSION CONTROL PRODUCT JOINT

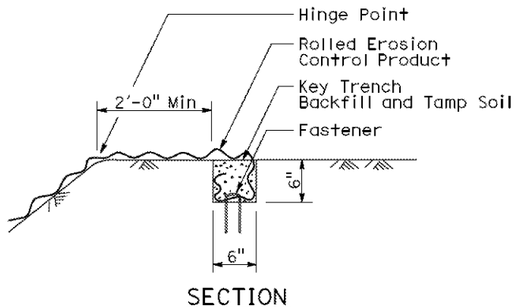

SECTION

DETAIL C KEY TRENCH AT TOP OF SLOPE

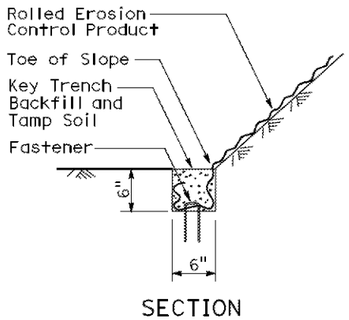

SECTION

DETAIL D KEY TRENCH AT TOE OF SLOPE

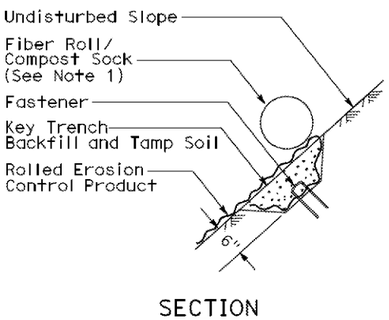

SECTION

DETAIL E KEY TRENCH AT UPPER CONFORM

STATE OF CALIFORNIA
DEPARTMENT OF TRANSPORTATION

ROLLED EROSION CONTROL PRODUCT

NO SCALE

NSP H53 DATED JUNE 5, 2009 SUPPLEMENTS THE STANDARD PLANS BOOK DATED MAY 2006.

NEW STANDARD PLAN NSP H53

2006 NEW STANDARD PLAN NSP H53

3-4-09