Dist	COUNTY	ROUTE	POST MILES TOTAL PROJECT	SHEET No.	TOTAL SHEETS
04	Ala	580	R33.4	1	91

STATE OF CALIFORNIA

DEPARTMENT OF TRANSPORTATION

ACNHPI-580-1(059)E

PROJECT PLANS FOR CONSTRUCTION ON

STATE HIGHWAY

IN ALAMEDA COUNTY
IN SAN LEANDRO
AT BENEDICT DRIVE OFF-RAMP

TO BE SUPPLEMENTED BY STANDARD PLANS DATED 2010

INDEX OF PLANS

SHEET No.	DESCRIPTION
1	TITLE SHEET AND LOCATION MAP
2 - 5	TYPICAL CROSS SECTIONS
6	LAYOUT
7 - 10	CONSTRUCTION DETAILS
11	TEMPORARY WATER POLLUTION CONTROL QUANTITIES
12 - 16	DRAINAGE PLAN, PROFILES, DETAILS AND QUANTITIES
17	UTILITY PLAN
18 - 19	CONSTRUCTION AREA SIGNS
20 - 24	STAGE CONSTRUCTION AND TRAFFIC HANDLING PLAN AND QUANTITIES
25 - 26	PAVEMENT DELINEATION PLAN AND QUANTITLES
27 - 28	SIGN PLAN AND QUANTITIES
29 - 30	SUMMARY OF QUANTITIES
31 - 36	IRRIGATION SPRINKLER SCHEDULE, PLAN, DETAILS AND QUANTITIES
37 - 39	PLANT LIST, PLAN AND QUANTITIES
40 - 41	EROSION CONTROL PLAN, DETAIL AND QUANTITIES
42 - 43	ELECTRICAL PLANS
44 - 77	REVISED STANDARD PLANS
	STRUCTURE PLANS
78 - 91	BENEDICT DRIVE SOLDIER PILE WALL

THE STANDARD PLANS LIST APPLICABLE TO THIS CONTRACT IS INCLUDED IN THE NOTICE TO BIDDERS AND SPECIAL PROVISIONS BOOK.

LOCATION MAP

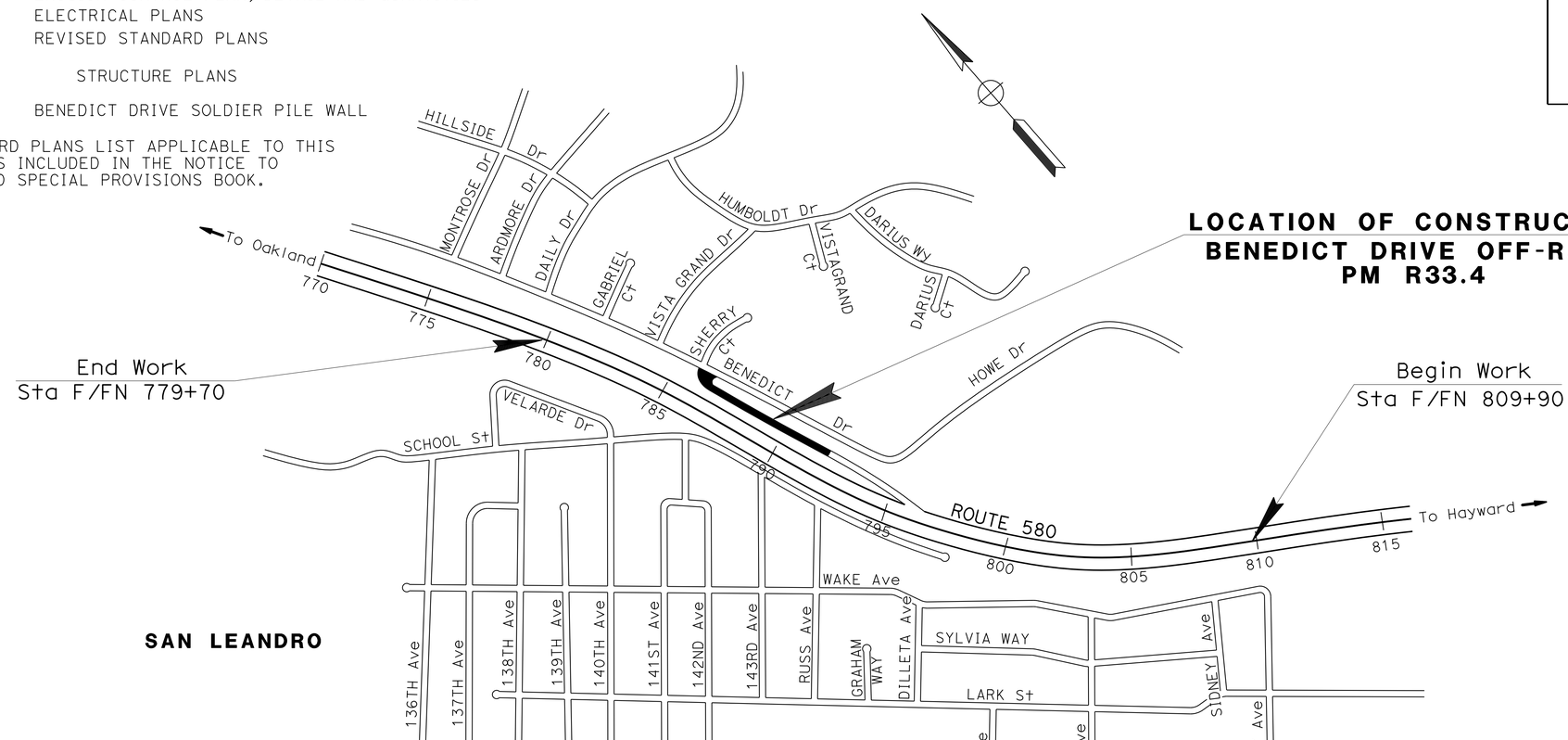

LOCATION OF CONSTRUCTION
BENEDICT DRIVE OFF-RAMP
PM R33.4

NO SCALE

THE CONTRACTOR SHALL POSSESS THE CLASS (OR CLASSES) OF LICENSE AS SPECIFIED IN THE "NOTICE TO BIDDERS."

PROJECT MANAGER: JAY HAGHPARAST

DESIGN MANAGER: ALBERT ZEPEDA

Paul Snyder 3/24/14
PROJECT ENGINEER REGISTERED CIVIL ENGINEER — DATE

June 22, 2015
PLANS APPROVAL DATE

REGISTERED PROFESSIONAL ENGINEER — Paul Alan Snyder — No. 41128 — Exp. 3-31-17 — CIVIL — STATE OF CALIFORNIA

THE STATE OF CALIFORNIA OR ITS OFFICERS OR AGENTS SHALL NOT BE RESPONSIBLE FOR THE ACCURACY OR COMPLETENESS OF SCANNED COPIES OF THIS PLAN SHEET.

CONTRACT No.	04-2G8604
PROJECT ID	0412000009

LAST REVISION 02-20-14 — DATE PLOTTED => 24-JUN-2015 — TIME PLOTTED => 14:17

Dist	COUNTY	ROUTE	POST MILES TOTAL PROJECT	SHEET No.	TOTAL SHEETS
04	Ala	580	R33.4	2	91

Paul Snyder 3/24/14
REGISTERED CIVIL ENGINEER DATE

6-22-15
PLANS APPROVAL DATE

REGISTERED PROFESSIONAL ENGINEER
Paul Alan Snyder
No. 41128
Exp. 3-31-17
CIVIL
STATE OF CALIFORNIA

THE STATE OF CALIFORNIA OR ITS OFFICERS OR AGENTS SHALL NOT BE RESPONSIBLE FOR THE ACCURACY OR COMPLETENESS OF SCANNED COPIES OF THIS PLAN SHEET.

NOTES:

1. DIMENSIONS OF THE PAVEMENT STRUCTURES (STRUCTURAL SECTIONS) ARE SUBJECT TO TOLERANCES SPECIFIED IN THE STANDARD SPECIFICATIONS.
2. EXACT LOCATIONS AND TYPES OF DIKES AND GUARDRAILING ARE SHOWN ON THE LAYOUT AND SUMMARY OF QUANTITIES SHEETS.
3. PLACE HMA TO CHANGE SURFACE CROSS SLOPE AND PROFILE. Min HMA THICKNESS SHOWN, Var THICKNESS (THICKER THAN Min) REQUIRED TO ACHIEVE FINAL CROSS SLOPE AND PROFILE (PAVEMENT ELEVATIONS).

ABBREVIATION:

& AND

PAVEMENT STRUCTURAL SECTIONS:

1
- 0.15' Min HMA (TYPE A)
- 0.45' HMA (TYPE A) (STAGE Const GRADE, SEE DETAIL A ON SHEET X-2)
- 0.40' Cl 2 AB
- SUBGRADE ENHANCEMENT GEOTEXTILE

2
- 0.90' HMA (TYPE A)
- 0.40' Cl 2 AB
- SUBGRADE ENHANCEMENT GEOTEXTILE

3
- 0.50' MINOR Conc (ISLAND PAVING)
- 0.90' HMA (TYPE A)
- 0.40' Cl 2 AB
- SUBGRADE ENHANCEMENT GEOTEXTILE

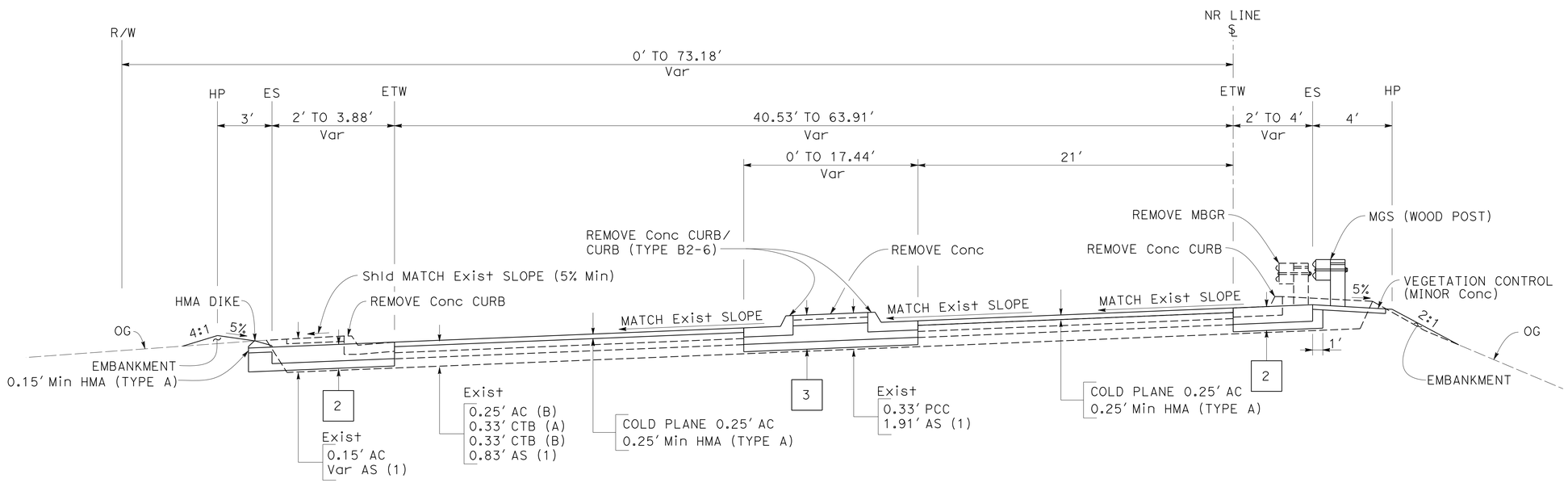

NR 83+27 TO 84+06

TYPICAL CROSS SECTIONS

NO SCALE

X-1

REVISED BY	DATE REVISED
AZ	11/7/13

CALCULATED-DESIGNED BY: ALBERT ZEPEDA
CHECKED BY: PAUL SNYDER
FUNCTIONAL SUPERVISOR: ALBERT ZEPEDA

STATE OF CALIFORNIA - DEPARTMENT OF TRANSPORTATION
Caltrans®
DESIGN

LAST REVISION 03-24-14 | DATE PLOTTED => 24-JUN-2015 | TIME PLOTTED => 13:53

Dist	COUNTY	ROUTE	POST MILES TOTAL PROJECT	SHEET No.	TOTAL SHEETS
04	Ala	580	R33.4	3	91

Paul Snyder 3/24/14
REGISTERED CIVIL ENGINEER DATE

6-22-15
PLANS APPROVAL DATE

REGISTERED PROFESSIONAL ENGINEER
Paul Alan Snyder
No. 41128
Exp. 3-31-17
CIVIL
STATE OF CALIFORNIA

THE STATE OF CALIFORNIA OR ITS OFFICERS OR AGENTS SHALL NOT BE RESPONSIBLE FOR THE ACCURACY OR COMPLETENESS OF SCANNED COPIES OF THIS PLAN SHEET.

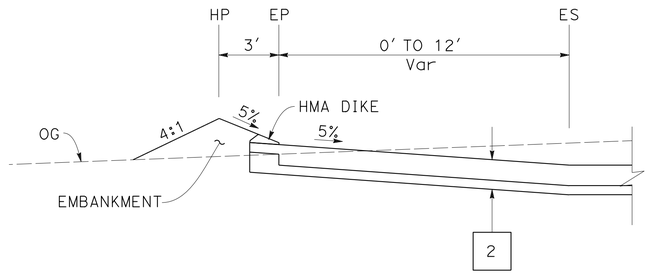

MVP
NR 85+25 TO 86+10

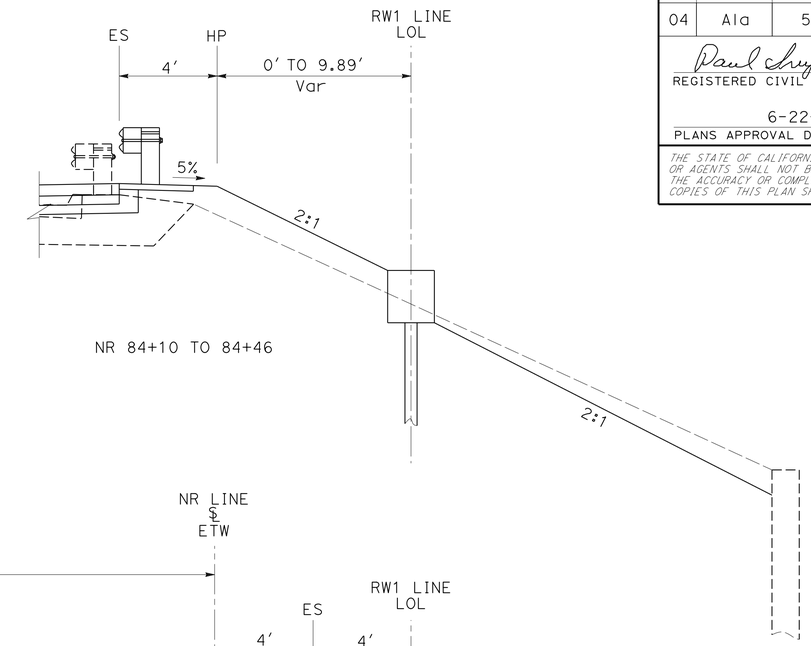

NR 84+10 TO 84+46

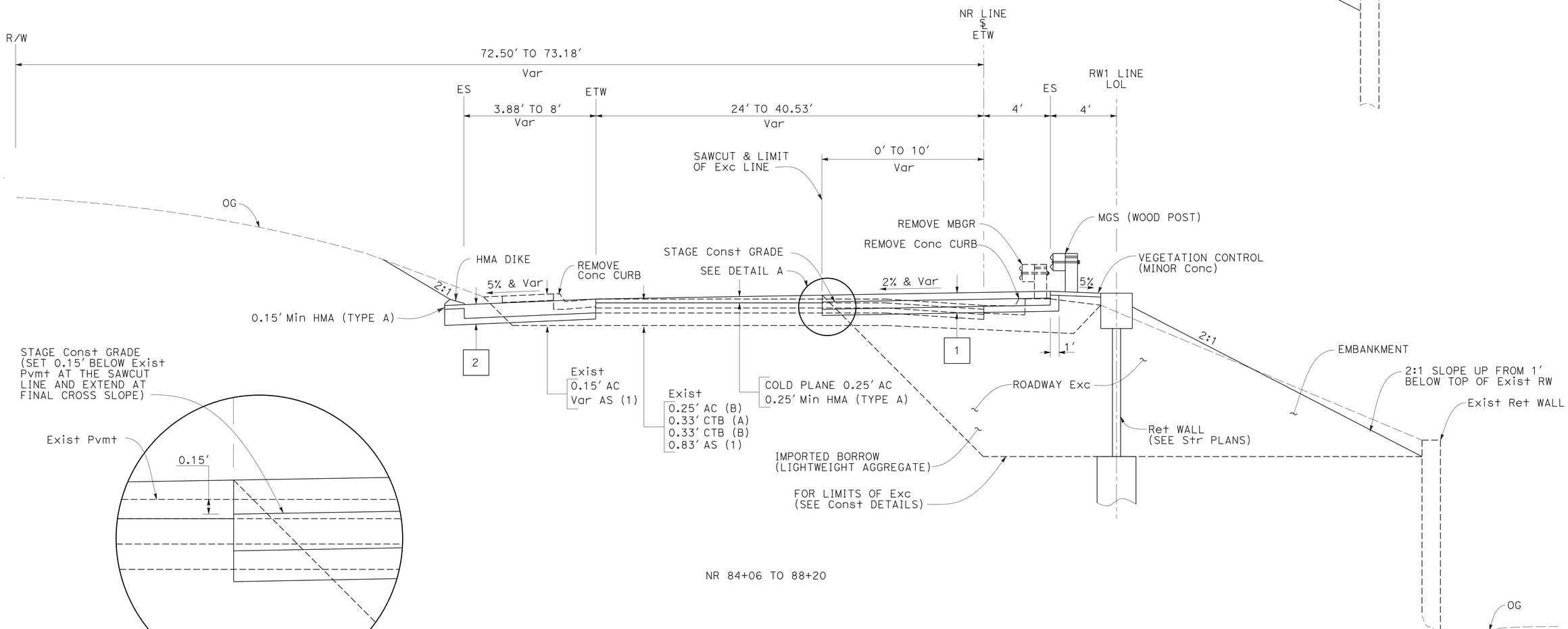

NR 84+06 TO 88+20

DETAIL A

TYPICAL CROSS SECTIONS
NO SCALE

FOR NOTES, ABBREVIATIONS AND LEGEND, SEE SHEET X-1

X-2

REVISED BY	AZ
DATE REVISED	11/17/13
CALCULATED-DESIGNED BY	ALBERT ZEPEDA
CHECKED BY	PAUL SNYDER
FUNCTIONAL SUPERVISOR	ALBERT ZEPEDA

STATE OF CALIFORNIA - DEPARTMENT OF TRANSPORTATION
Caltrans
DESIGN

LAST REVISION 02-19-14
DATE PLOTTED => 24-JUN-2015
TIME PLOTTED => 13:53

Dist	COUNTY	ROUTE	POST MILES TOTAL PROJECT	SHEET No.	TOTAL SHEETS
04	Ala	580	R33.4	4	91

Paul Snyder 3/24/14
REGISTERED CIVIL ENGINEER DATE

6-22-15
PLANS APPROVAL DATE

REGISTERED PROFESSIONAL ENGINEER Paul Alan Snyder No. 41128 Exp. 3-31-17 CIVIL STATE OF CALIFORNIA

THE STATE OF CALIFORNIA OR ITS OFFICERS OR AGENTS SHALL NOT BE RESPONSIBLE FOR THE ACCURACY OR COMPLETENESS OF SCANNED COPIES OF THIS PLAN SHEET.

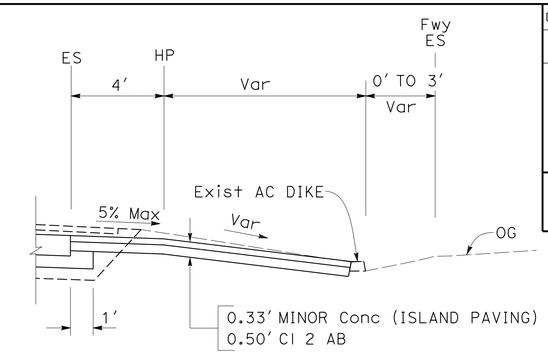

CONTRASTING SURFACE TREATMENT

NR 90+90 TO 92+02

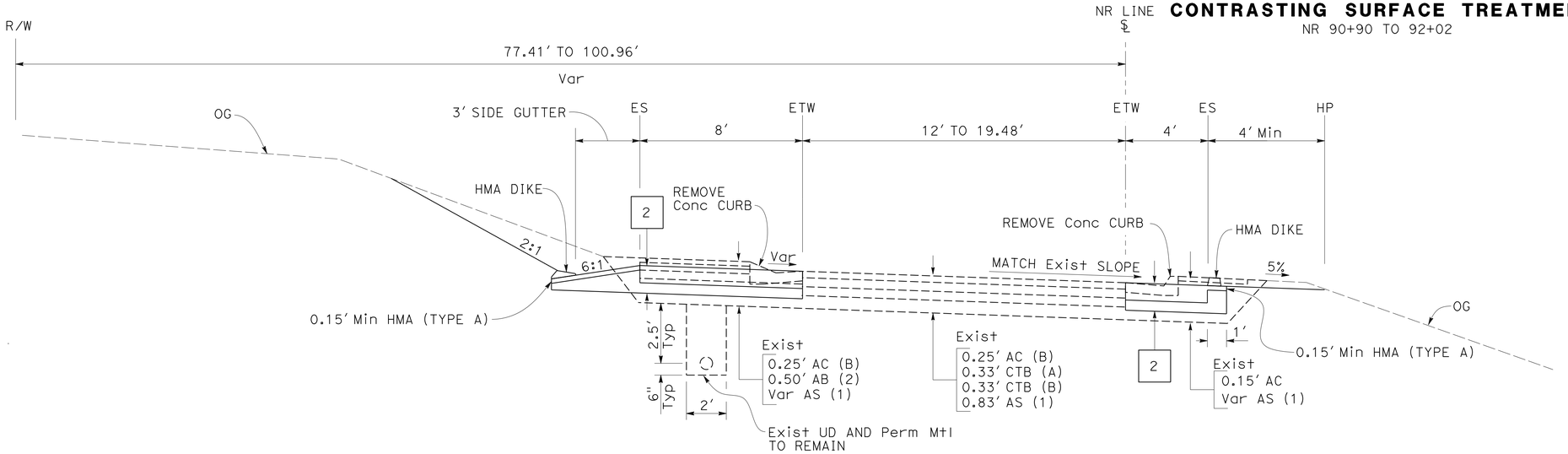

NR 89+50 TO 92+02

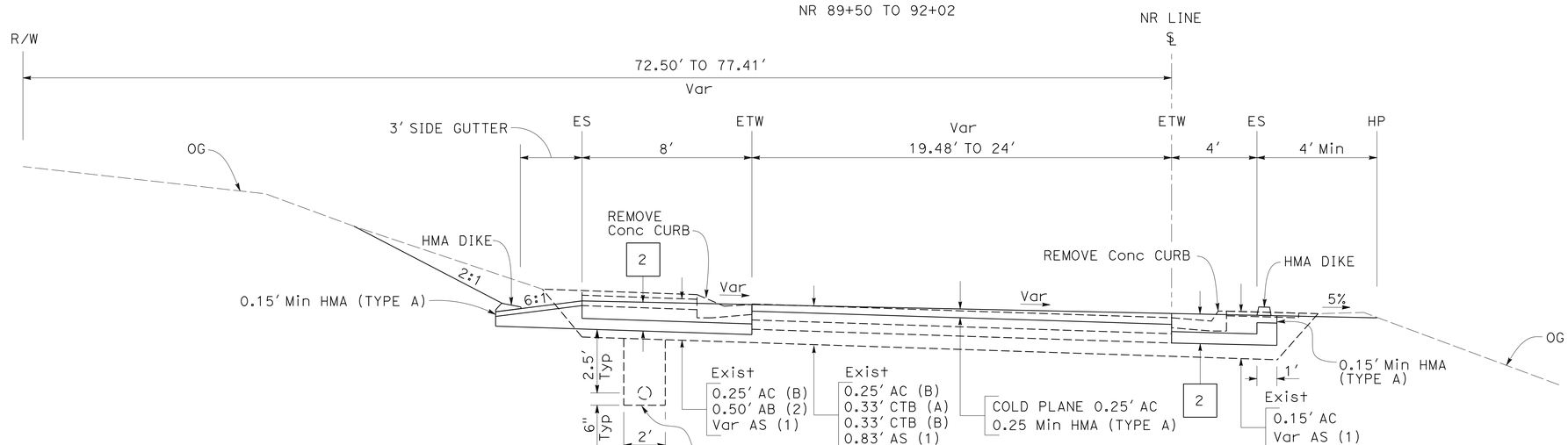

NR 88+20 TO 89+50

TYPICAL CROSS SECTIONS

NO SCALE

FOR NOTES, ABBREVIATIONS AND LEGEND, SEE SHEET X-1

X-3

REVISED BY	DATE REVISED
AZ	12/5/13

CALCULATED-DESIGNED BY: ALBERT ZEPEDA
CHECKED BY: PAUL SNYDER
FUNCTIONAL SUPERVISOR: ALBERT ZEPEDA

STATE OF CALIFORNIA - DEPARTMENT OF TRANSPORTATION
Caltrans
DESIGN

LAST REVISION 02-19-14
DATE PLOTTED => 24-JUN-2015
TIME PLOTTED => 13:53

Dist	COUNTY	ROUTE	POST MILES TOTAL PROJECT	SHEET No.	TOTAL SHEETS
04	Ala	580	R33.4	5	91

Paul Snyder 3/24/14
REGISTERED CIVIL ENGINEER DATE

6-22-15
PLANS APPROVAL DATE

REGISTERED PROFESSIONAL ENGINEER
Paul Alan Snyder
No. 41128
Exp. 3-31-17
CIVIL
STATE OF CALIFORNIA

THE STATE OF CALIFORNIA OR ITS OFFICERS OR AGENTS SHALL NOT BE RESPONSIBLE FOR THE ACCURACY OR COMPLETENESS OF SCANNED COPIES OF THIS PLAN SHEET.

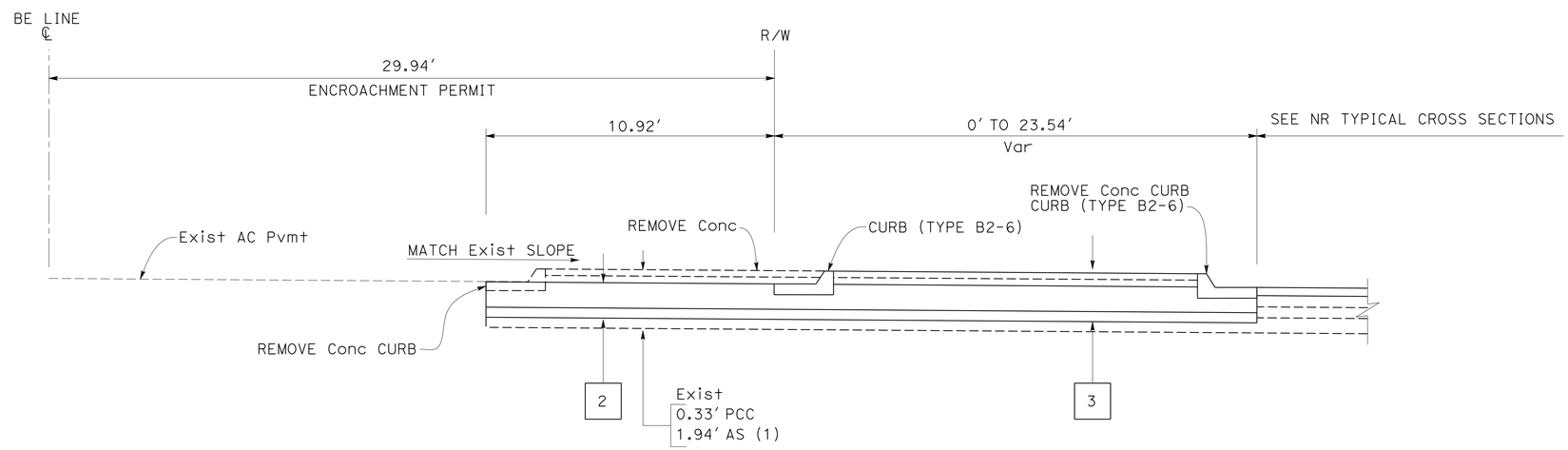

BE 10+25 TO 10+37

FOR NOTES, ABBREVIATIONS AND LEGEND, SEE SHEET X-1

TYPICAL CROSS SECTIONS

NO SCALE

X-4

STATE OF CALIFORNIA - DEPARTMENT OF TRANSPORTATION
Caltrans®
DESIGN

FUNCTIONAL SUPERVISOR: ALBERT ZEPEDA
CALCULATED-DESIGNED BY: ALBERT ZEPEDA
CHECKED BY: PAUL SNYDER
REVISED BY: AZ
DATE REVISED: 2/14/14

LAST REVISION 03-05-14
DATE PLOTTED => 24-JUN-2015
TIME PLOTTED => 13:53

Dist	COUNTY	ROUTE	POST MILES TOTAL PROJECT	SHEET No.	TOTAL SHEETS
04	Ala	580	R33.4	6	91

Paul Snyder 3/24/14
REGISTERED CIVIL ENGINEER DATE

6-22-15
PLANS APPROVAL DATE

REGISTERED PROFESSIONAL ENGINEER Paul Alan Snyder No. 41128 Exp. 3-31-17 CIVIL STATE OF CALIFORNIA

THE STATE OF CALIFORNIA OR ITS OFFICERS OR AGENTS SHALL NOT BE RESPONSIBLE FOR THE ACCURACY OR COMPLETENESS OF SCANNED COPIES OF THIS PLAN SHEET.

NOTE:

FOR ACCURATE RIGHT OF WAY DATA, CONTACT RIGHT OF WAY ENGINEERING AT THE DISTRICT OFFICE.

NOTE:

* ALL TIES ARE TO CENTER OF CURB NOSE, R=1' UNLESS OTHERWISE NOTED.

LEGEND:

No. — STRUCTURAL SECTION NUMBER

COLD PLANE 0.25' AC Pvmt AND PLACE HMA (TYPE A) (0.25' Min)

CONTRASTING SURFACE TREATMENT

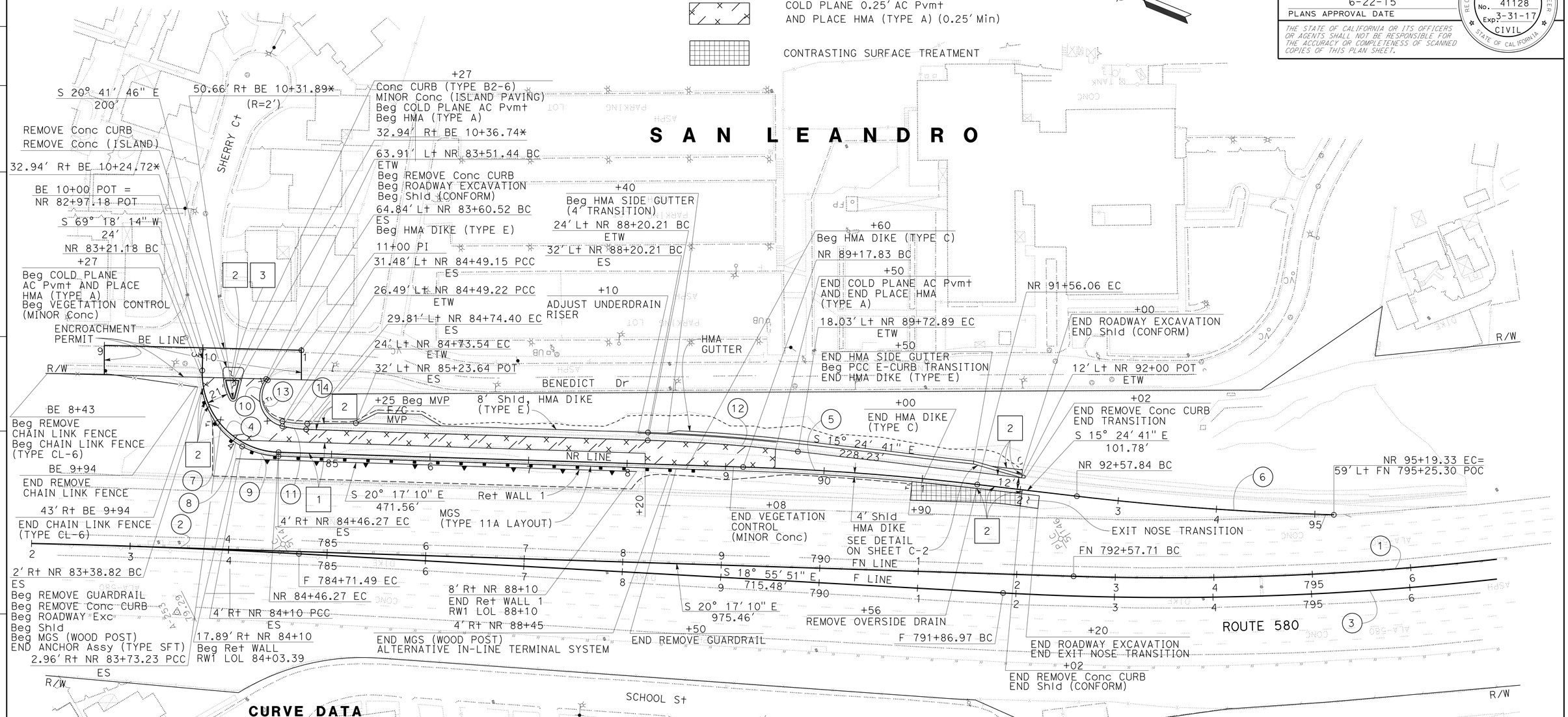

CURVE DATA

No. ⊕	R	Δ	T	L	N-COORDINATE	E-COORDINATE
1	2980'	36° 12' 43"	974.36'	1883.41'	447746.741	1531133.507
2	8000'	04° 48' 33"	335.94'	671.49'	444854.831	1520496.366
3	3000'	39° 47' 24"	1085.69'	2083.40'	447746.741	1531133.507
4	80'	89° 35' 24"	79.43'	125.09'	447535.898	1528226.371
5	2800'	04° 52' 29"	119.19'	238.23'	446095.069	1525688.502
6	2921'	05° 07' 45"	130.83'	261.49'	447517.287	1531230.838
7	94'	21° 35' 33"	17.93'	35.42'	447525.872	1528232.965
8	75'	29° 23' 05"	19.67'	38.46'	447536.791	1528217.415
9	84'	25° 58' 44"	19.38'	38.09'	447535.898	1528226.371
10	30'	115° 23' 02"	47.44'	60.41'	447519.062	1528206.865
11	120'	11° 41' 30"	12.29'	24.49'	447532.512	1528295.855
12	1800'	04° 52' 29"	76.62'	153.15'	446541.666	1526615.139
13	26'	116° 59' 27"	42.42'	53.09'	447520.977	1528207.443
14	115'	12° 37' 46"	12.73'	25.35'	447536.740	1528295.036

LAYOUT

SCALE: 1" = 50'

L-1

STATE OF CALIFORNIA - DEPARTMENT OF TRANSPORTATION
Caltrans DESIGN

FUNCTIONAL SUPERVISOR: ALBERT ZEPEDA
CALCULATED-DESIGNED BY: PAUL SNYDER
CHECKED BY: JIIN-TIAN TENG
REVISED BY: PS
DATE REVISED: 12/23/13

LAST REVISION 03-05-14
DATE PLOTTED => 24-JUN-2015
TIME PLOTTED => 13:53

Dist	COUNTY	ROUTE	POST MILES TOTAL PROJECT	SHEET No.	TOTAL SHEETS
04	Ala	580	R33.4	7	91

Paul Snyder 3/24/14
REGISTERED CIVIL ENGINEER DATE

6-22-15
PLANS APPROVAL DATE

REGISTERED PROFESSIONAL ENGINEER
Paul Alan Snyder
No. 41128
Exp. 3-31-17
CIVIL
STATE OF CALIFORNIA

THE STATE OF CALIFORNIA OR ITS OFFICERS OR AGENTS SHALL NOT BE RESPONSIBLE FOR THE ACCURACY OR COMPLETENESS OF SCANNED COPIES OF THIS PLAN SHEET.

LEGEND:

No. STRUCTURAL SECTION NUMBER

NOTES:

1. USE SUITABLE DRAINAGE MEASURES.
2. ALL TEMPORARY CUTS SHALL CONFORM TO CAL-OSHA REQUIREMENTS IN GENERAL AND SHALL BE NO STEEPER THAN 1:1.

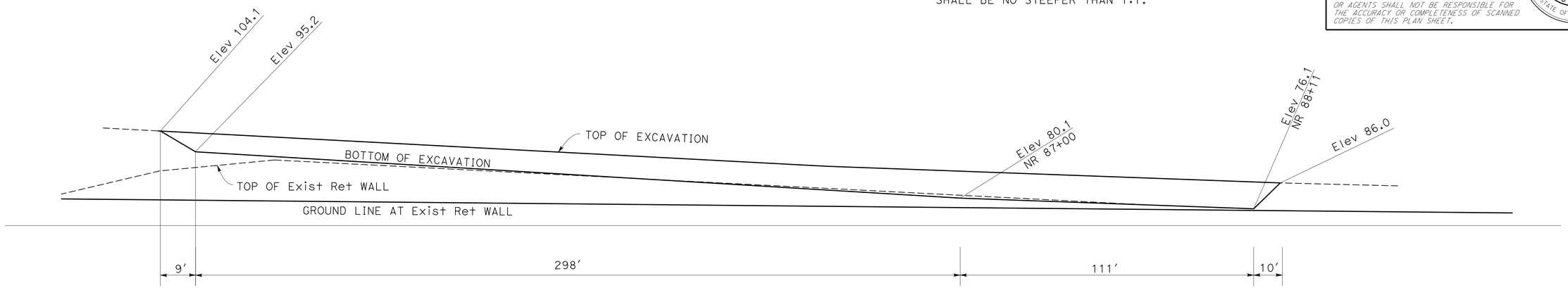

ELEVATION

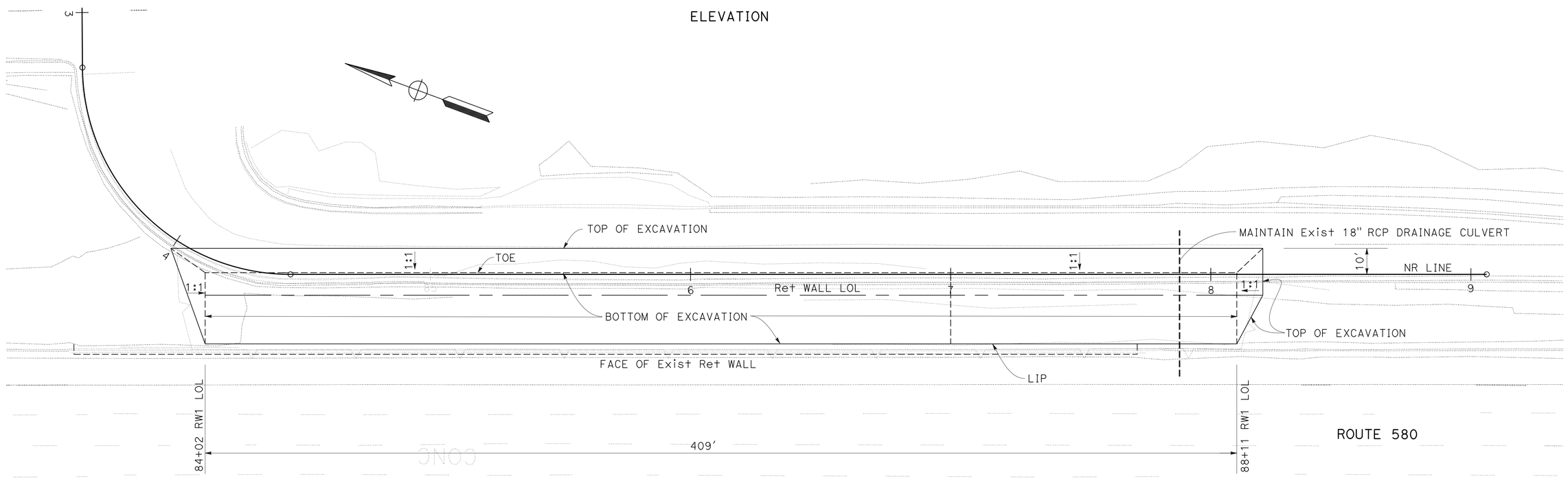

PLAN

CONSTRUCTION DETAILS
ROADWAY EXCAVATION
SCALE: 1" = 20'

C-1

STATE OF CALIFORNIA - DEPARTMENT OF TRANSPORTATION
DESIGN

FUNCTIONAL SUPERVISOR	CALCULATED-DESIGNED BY	CHECKED BY	REVISED BY	DATE REVISED
ALBERT ZEPEDA	PAUL SNYDER	JIIN-TIAN TENG	PS	12/6/13

LAST REVISION 02-19-14 | DATE PLOTTED => 24-JUN-2015 | TIME PLOTTED => 13:53

Dist	COUNTY	ROUTE	POST MILES TOTAL PROJECT	SHEET No.	TOTAL SHEETS
04	Ala	580	R33.4	8	91

Paul Snyder 3/24/14
REGISTERED CIVIL ENGINEER DATE

6-22-15
PLANS APPROVAL DATE

REGISTERED PROFESSIONAL ENGINEER
Paul Alan Snyder
No. 41128
Exp. 3-31-17
CIVIL
STATE OF CALIFORNIA

THE STATE OF CALIFORNIA OR ITS OFFICERS OR AGENTS SHALL NOT BE RESPONSIBLE FOR THE ACCURACY OR COMPLETENESS OF SCANNED COPIES OF THIS PLAN SHEET.

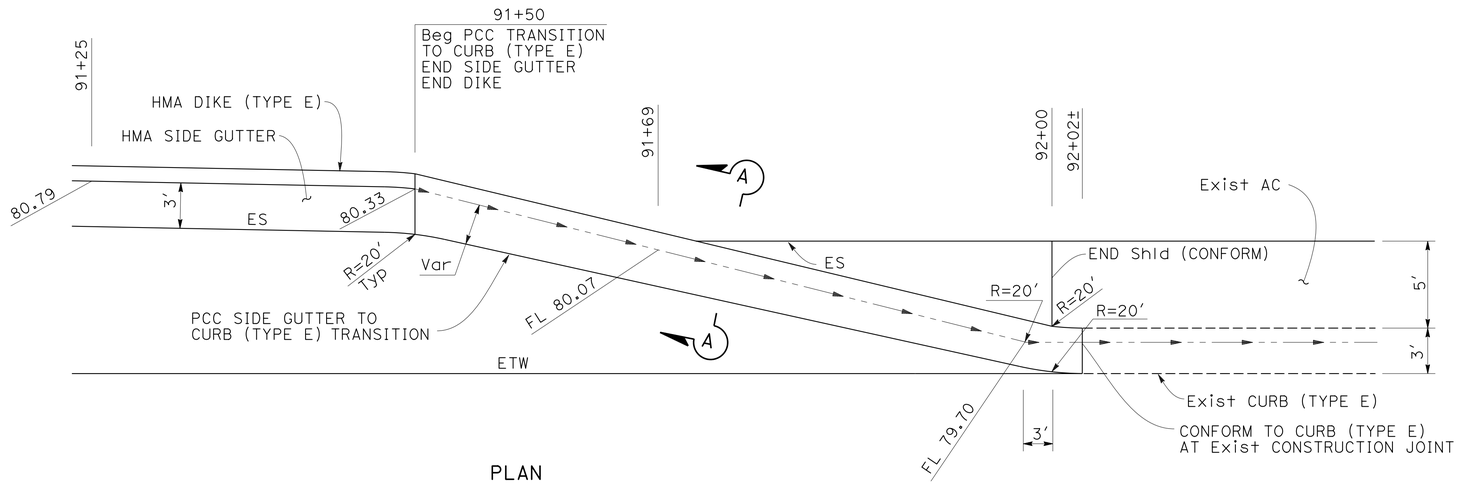

PLAN

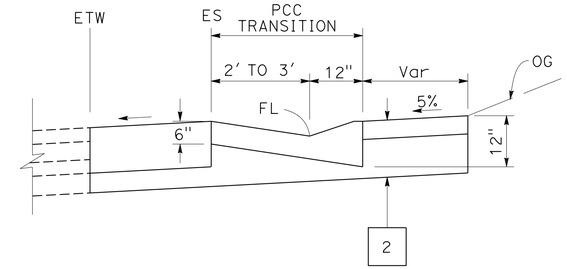

SECTION A-A

PCC SIDE GUTTER TO TYPE E CURB TRANSITION

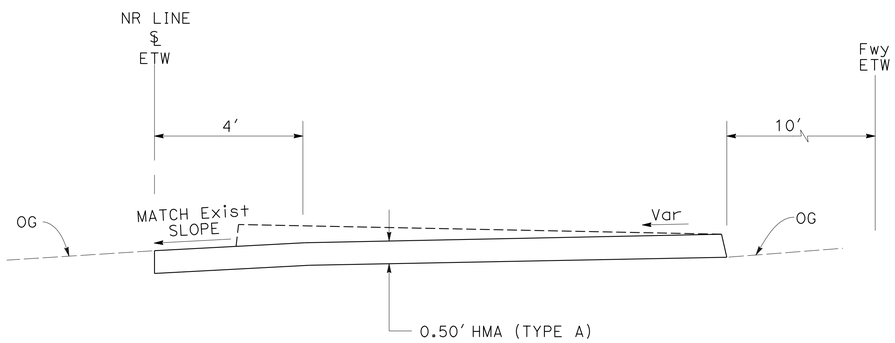

SECTION B-B
NR 92+02

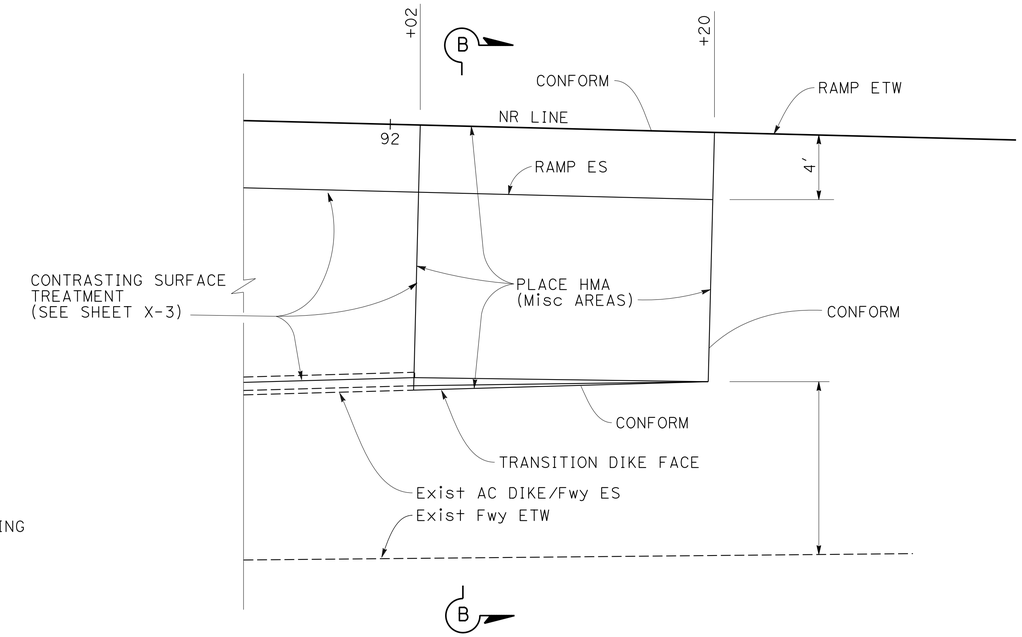

PLAN

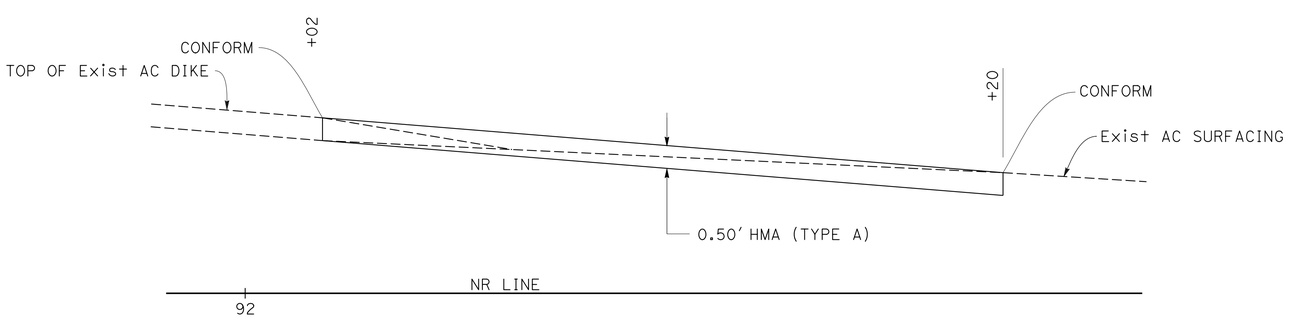

ELEVATION

EXIT NOSE TRANSITION

FOR NOTES, ABBREVIATIONS AND LEGEND, SEE SHEET C-1

CONSTRUCTION DETAILS
NO SCALE

C-2

REVISED BY	PS
DATE REVISED	12/4/13
CALCULATED-DESIGNED BY	PAUL SNYDER
CHECKED BY	JIIN-TIAN TENG
FUNCTIONAL SUPERVISOR	ALBERT ZEPEDA

STATE OF CALIFORNIA - DEPARTMENT OF TRANSPORTATION
Caltrans®
DESIGN

LAST REVISION 03-05-14
DATE PLOTTED => 24-JUN-2015
TIME PLOTTED => 13:53

Dist	COUNTY	ROUTE	POST MILES TOTAL PROJECT	SHEET No.	TOTAL SHEETS
04	Ala	580	R33.4	9	91

Paul Snyder 3/24/14
REGISTERED CIVIL ENGINEER DATE

6-22-15
PLANS APPROVAL DATE

REGISTERED PROFESSIONAL ENGINEER
Paul Alan Snyder
No. 41128
Exp. 3-31-17
CIVIL
STATE OF CALIFORNIA

THE STATE OF CALIFORNIA OR ITS OFFICERS OR AGENTS SHALL NOT BE RESPONSIBLE FOR THE ACCURACY OR COMPLETENESS OF SCANNED COPIES OF THIS PLAN SHEET.

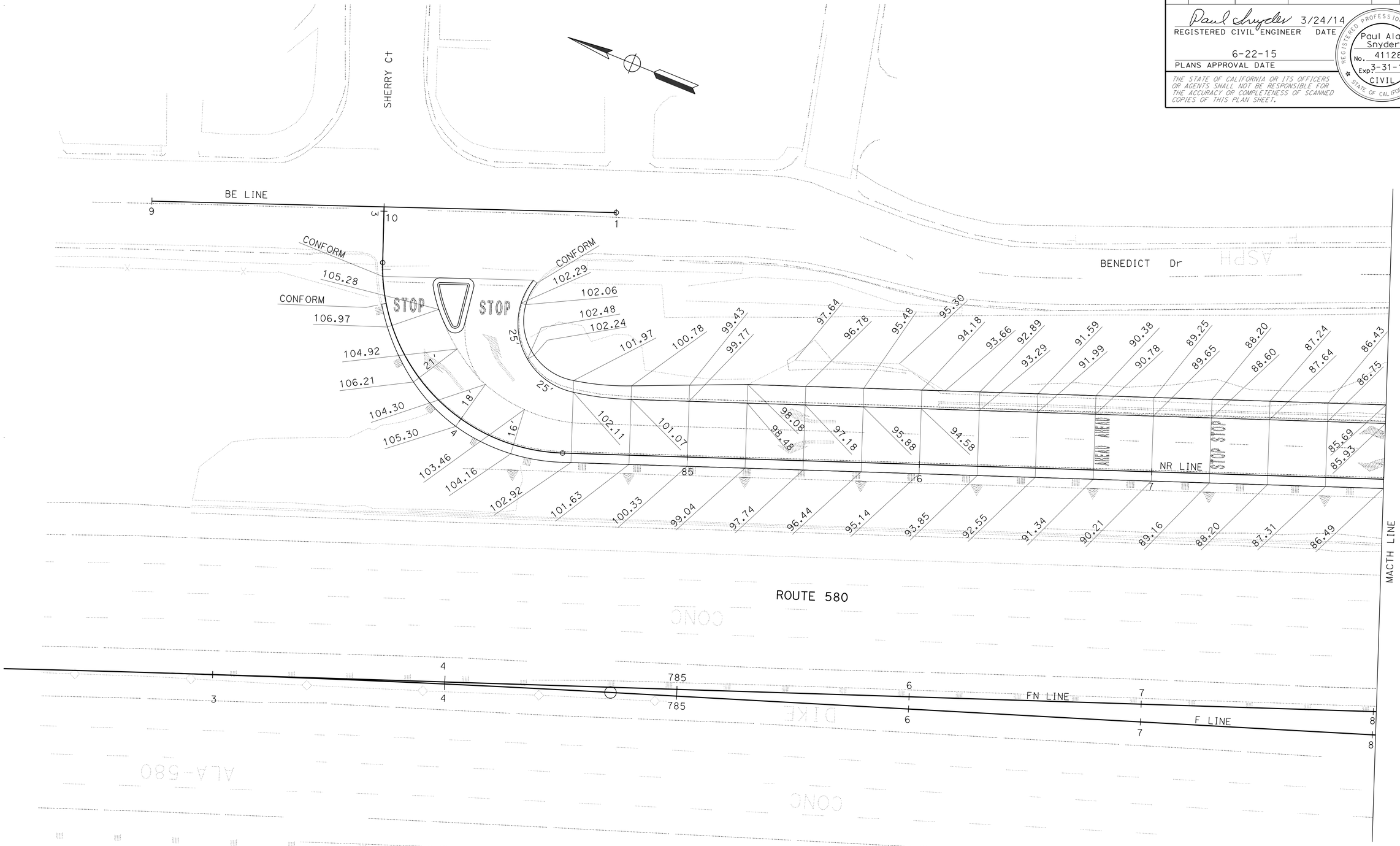

CONSTRUCTION DETAILS
PAVEMENT ELEVATION PLAN
SCALE: 1" = 20'

APPROVED FOR PAVEMENT ELEVATION WORK ONLY

FOR NOTES, ABBREVIATIONS AND LEGEND, SEE SHEET C-1

C-3

STATE OF CALIFORNIA - DEPARTMENT OF TRANSPORTATION
Caltrans
DESIGN

FUNCTIONAL SUPERVISOR: ALBERT ZEPEDA
CALCULATED-DESIGNED BY: PAUL SNYDER
CHECKED BY: JIIN-TIAN TENG
REVISED BY: PS
DATE REVISED: 11/14/13

LAST REVISION 02-19-14
DATE PLOTTED => 24-JUN-2015
TIME PLOTTED => 13:53

Dist	COUNTY	ROUTE	POST MILES TOTAL PROJECT	SHEET No.	TOTAL SHEETS
04	Ala	580	R33.4	10	91

Paul Snyder 3/24/14
REGISTERED CIVIL ENGINEER DATE

6-22-15
PLANS APPROVAL DATE

REGISTERED PROFESSIONAL ENGINEER
Paul Alan Snyder
No. 41128
Exp. 3-31-17
CIVIL
STATE OF CALIFORNIA

THE STATE OF CALIFORNIA OR ITS OFFICERS OR AGENTS SHALL NOT BE RESPONSIBLE FOR THE ACCURACY OR COMPLETENESS OF SCANNED COPIES OF THIS PLAN SHEET.

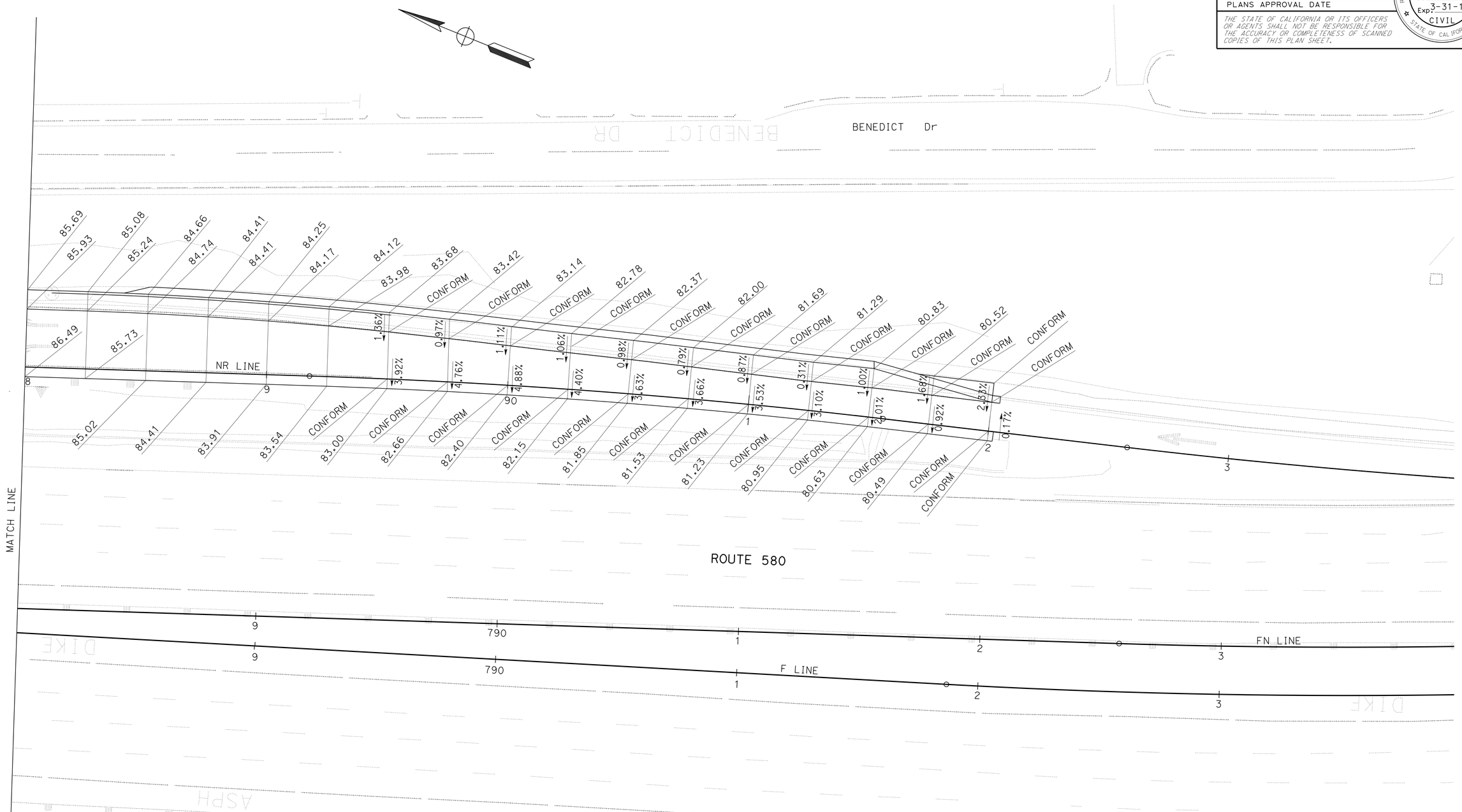

CONSTRUCTION DETAILS
PAVEMENT ELEVATION PLAN

SCALE: 1" = 20'

APPROVED FOR PAVEMENT ELEVATION WORK ONLY

FOR NOTES, ABBREVIATIONS AND LEGEND, SEE SHEET C-1

C-4

STATE OF CALIFORNIA - DEPARTMENT OF TRANSPORTATION
Caltrans
DESIGN

FUNCTIONAL SUPERVISOR: ALBERT ZEPEDA
CALCULATED-DESIGNED BY: PAUL SNYDER
CHECKED BY: JIIN-TIAN TENG
REVISED BY: PS
DATE REVISED: 12/6/13

LAST REVISION 02-19-14
DATE PLOTTED => 24-JUN-2015
TIME PLOTTED => 13:53

BORDER LAST REVISED 2/1/2013
USERNAME => s126849
DGN FILE => 0412000009gd004.dgn
RELATIVE BORDER SCALE IS IN INCHES 0 1 2 3
UNIT 0727
PROJECT NUMBER & PHASE 04120000091

Dist	COUNTY	ROUTE	POST MILES TOTAL PROJECT	SHEET No.	TOTAL SHEETS
04	Ala	580	R33.4	11	91

REGISTERED CIVIL ENGINEER 3/24/14 DATE

6-22-15
PLANS APPROVAL DATE

REGISTERED PROFESSIONAL ENGINEER Sharon X. Yuan No. 58701 Exp. 12-31-16 CIVIL STATE OF CALIFORNIA

THE STATE OF CALIFORNIA OR ITS OFFICERS OR AGENTS SHALL NOT BE RESPONSIBLE FOR THE ACCURACY OR COMPLETENESS OF SCANNED COPIES OF THIS PLAN SHEET.

TEMPORARY WATER POLLUTION CONTROL QUANTITY

ITEMS	QUANTITY	TOTAL
TEMPORARY HYDRAULIC MULCH (BFM) (SQYD)	6600	6600
TEMPORARY DRAINAGE INLET PROTECTION (EA)	5	5
TEMPORARY CONSTRUCTION ENTRANCE (EA)	2	2
TEMPORARY FIBER ROLL (LF)	1200	1200
TEMPORARY SILT FENCE (LF)	850	850

REVISED BY: SY
DATE REVISED: 3/24/14

SHARON YUAN
KAMRAN NAKHJIRI

CALCULATED-DESIGNED BY
CHECKED BY

FUNCTIONAL SUPERVISOR
KAMRAN NAKHJIRI

STATE OF CALIFORNIA - DEPARTMENT OF TRANSPORTATION
Caltrans
WATER QUALITY

TEMPORARY WATER POLLUTION CONTROL QUANTITIES

WPCQ-1

LAST REVISION 03-24-14
DATE PLOTTED => 24-JUN-2015
TIME PLOTTED => 13:53

Dist	COUNTY	ROUTE	POST MILES TOTAL PROJECT	SHEET No.	TOTAL SHEETS
04	Ala	580	R33.4	12	91

Craig M Tomimatsu 3/24/14
REGISTERED CIVIL ENGINEER DATE

6-22-15
PLANS APPROVAL DATE

REGISTERED PROFESSIONAL ENGINEER Craig M. Tomimatsu No. 43072 Exp. 3-31-16 CIVIL STATE OF CALIFORNIA

THE STATE OF CALIFORNIA OR ITS OFFICERS OR AGENTS SHALL NOT BE RESPONSIBLE FOR THE ACCURACY OR COMPLETENESS OF SCANNED COPIES OF THIS PLAN SHEET.

NOTE:

FOR ACCURATE RIGHT OF WAY DATA, CONTACT RIGHT OF WAY ENGINEERING AT THE DISTRICT OFFICE.

NOTES:

1. PROJECT VERTICAL DATUM IS NAV D88.
2. UNLESS OTHERWISE NOTED, STATION AND OFFSET TIES TO DRAINAGE STRUCTURES ARE MEASURED PER THE DETAILS ON SHEET DD-1.
3. STANDARD INLET DEPRESSIONS, PER STANDARD PLAN D78B SHALL BE CONSTRUCTED OF 8 INCH THICK PORTLAND CEMENT CONCRETE. WHERE LOCATED WITHIN PAVED ASPHALT SHOULDERS, ISOLATION JOINTS ARE NOT REQUIRED. ASPHALT INLET DEPRESSIONS SHALL NOT BE ALLOWED.
4. THE LOCATIONS OF Exist DRAINAGE FACILITIES SHOWN ON THE PLANS ARE APPROXIMATE. WHERE A PROPOSED DRAINAGE SYSTEM CONNECTS TO AN Exist DRAINAGE FACILITY, THE CONTRACTOR SHALL FIELD VERIFY THE LOCATION AND INVERT ELEVATION OF THE Exist FACILITY. DISCREPANCIES SHALL BE BROUGHT TO THE ATTENTION OF THE ENGINEER PRIOR TO CONSTRUCTING ANY PORTION OF THE PROPOSED DRAINAGE SYSTEM.

ABBREVIATIONS:

SID	STANDARD INLET DEPRESSION
w/	WITH

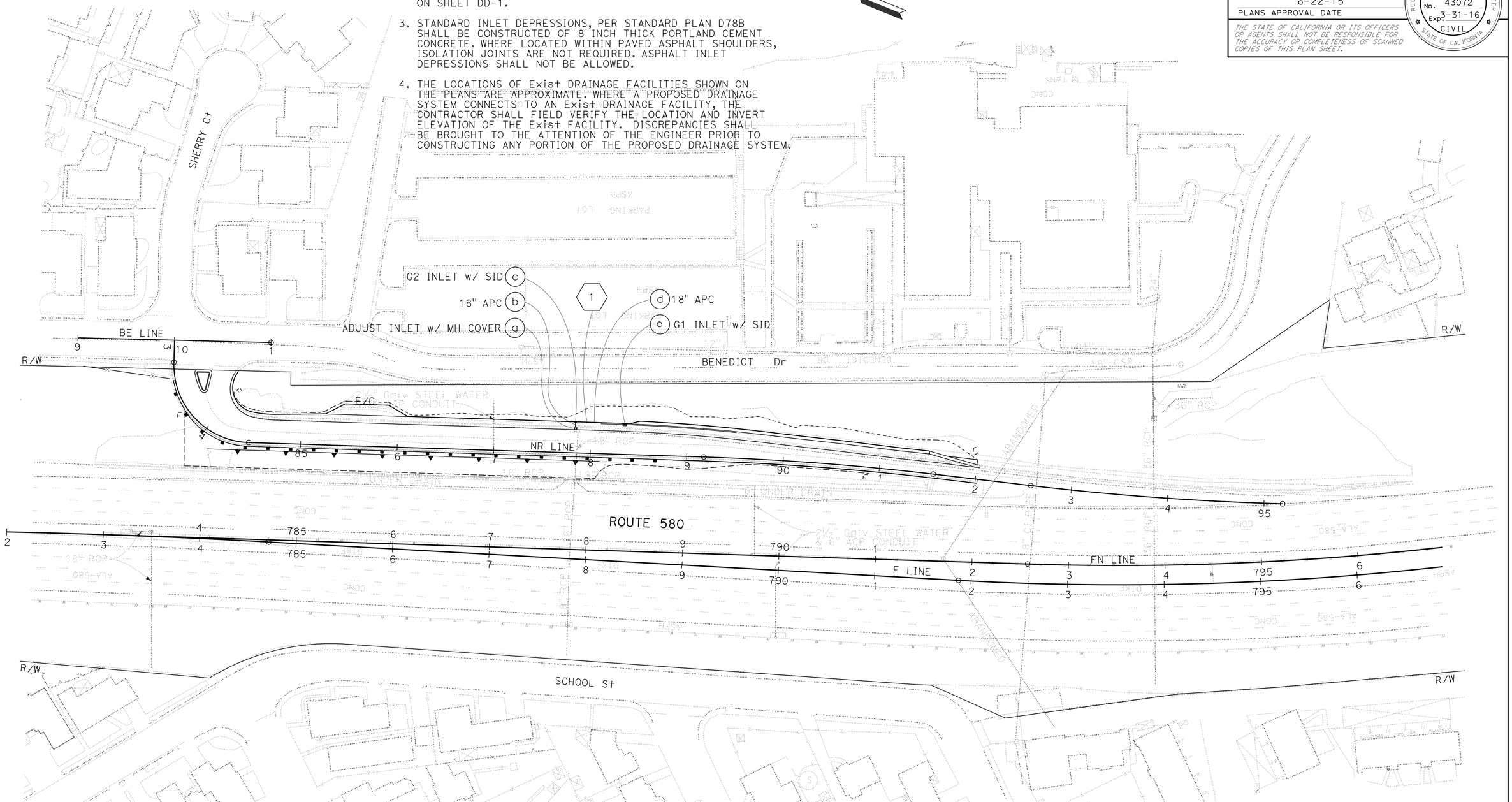

DRAINAGE PLAN

SCALE: 1" = 50'

APPROVED FOR DRAINAGE WORK ONLY

D-1

STATE OF CALIFORNIA - DEPARTMENT OF TRANSPORTATION
Caltrans® HYDRAULICS

FUNCTIONAL SUPERVISOR: JOSEPH PETERSON
CALCULATED-DESIGNED BY: CRAIG TOMIMATSU
CHECKED BY: PAUL SNYDER
REVISED BY: CT
DATE REVISED: 12/5/13

LAST REVISION 02-19-14
DATE PLOTTED => 24-JUN-2015
TIME PLOTTED => 13:53

Dist	COUNTY	ROUTE	POST MILES TOTAL PROJECT	SHEET No.	TOTAL SHEETS
04	Ala	580	R33.4	13	91

Paul Snyder 3/24/14
REGISTERED CIVIL ENGINEER DATE

6-22-15
PLANS APPROVAL DATE

REGISTERED PROFESSIONAL ENGINEER
Paul Alan Snyder
No. 41128
Exp. 3-31-17
CIVIL
STATE OF CALIFORNIA

THE STATE OF CALIFORNIA OR ITS OFFICERS OR AGENTS SHALL NOT BE RESPONSIBLE FOR THE ACCURACY OR COMPLETENESS OF SCANNED COPIES OF THIS PLAN SHEET.

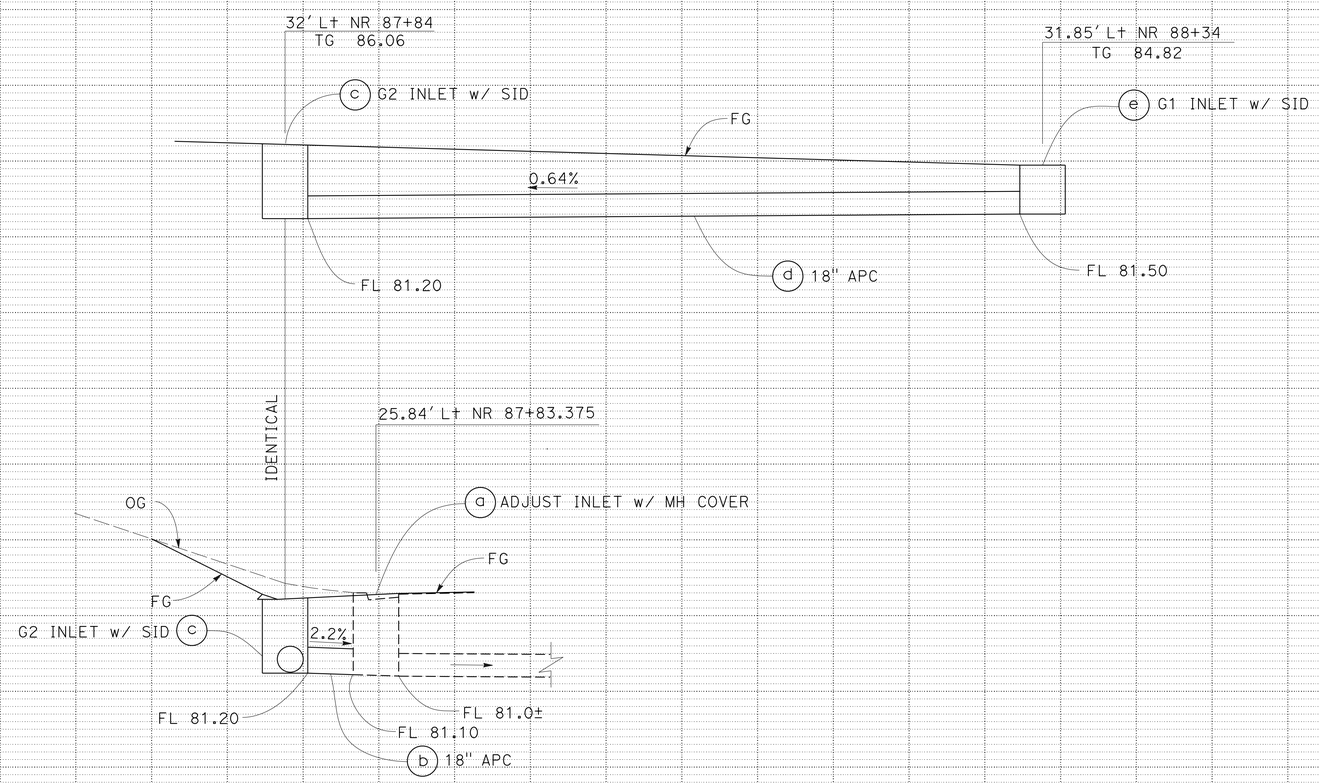

DRAINAGE SYSTEM No. 1

DRAINAGE PROFILES

SCALE: HORIZ 1" = 5'
VERT 1" = 5'

DP-1

STATE OF CALIFORNIA - DEPARTMENT OF TRANSPORTATION
Caltrans
DESIGN

FUNCTIONAL SUPERVISOR: ALBERT ZEPEDA
CALCULATED-DESIGNED BY: JIIN-TIAN TENG
CHECKED BY: PAUL SNYDER
REVISED BY: PS
DATE REVISED: 12/9/13

LAST REVISION 02-19-14
DATE PLOTTED => 24-JUN-2015
TIME PLOTTED => 13:53

Dist	COUNTY	ROUTE	POST MILES TOTAL PROJECT	SHEET No.	TOTAL SHEETS
04	Ala	580	R33.4	14	91

Craig M Tomimatsu 3/24/14
REGISTERED CIVIL ENGINEER DATE

6-22-15
PLANS APPROVAL DATE

REGISTERED PROFESSIONAL ENGINEER Craig M. Tomimatsu No. 43072 Exp. 3-31-16 CIVIL STATE OF CALIFORNIA

THE STATE OF CALIFORNIA OR ITS OFFICERS OR AGENTS SHALL NOT BE RESPONSIBLE FOR THE ACCURACY OR COMPLETENESS OF SCANNED COPIES OF THIS PLAN SHEET.

NOTES:

1. FOR INLET DETAILS NOT SHOWN, SEE Std PLANS D73 THRU D74B.
2. ORIENTATION OF TYPE G1 INLETS SIMILAR.

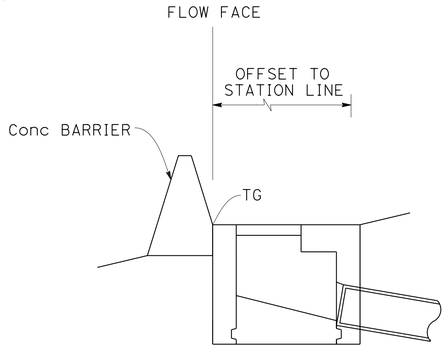

SECTION B-B

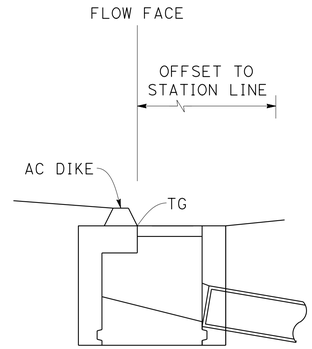

SECTION C-C

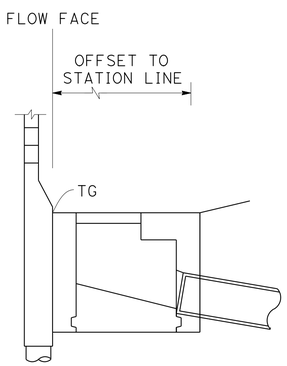

SECTION A-A

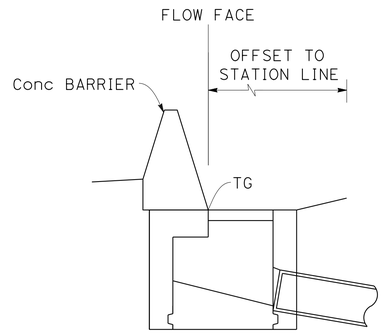

SECTION D-D

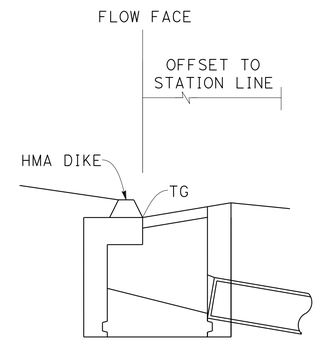

ELEVATION

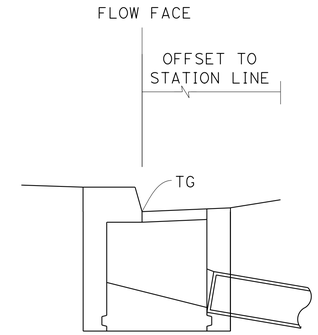

ELEVATION

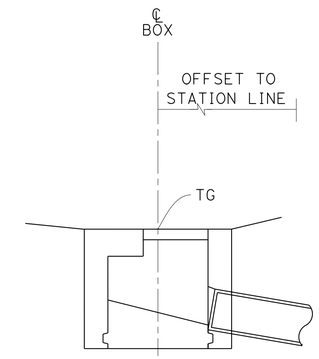

ELEVATION

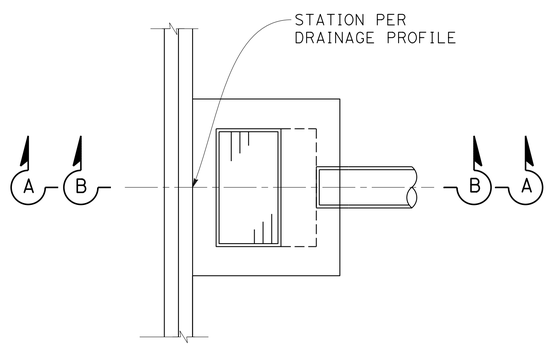

PLAN

INLET ADJACENT TO SOUND WALL
(SECTION A-A)
(TYPES 736 S/SV)
OR CONCRETE BARRIER
(SECTION B-B)
(TYPES 60E, 60GE, 60SC, 60SE, OR HIGH SIDE OF TYPES 60C, 60GC)

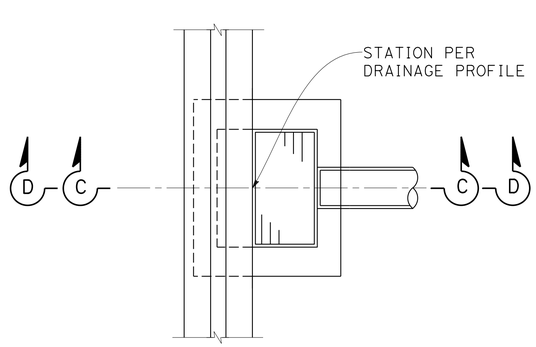

PLAN

INLET ADJACENT TO HMA DIKE
(SECTION C-C)
OR CONCRETE BARRIER
(SECTION D-D)
(TYPE 60C SHOWN, TYPES 60, 60G, 60GC SIMILAR)

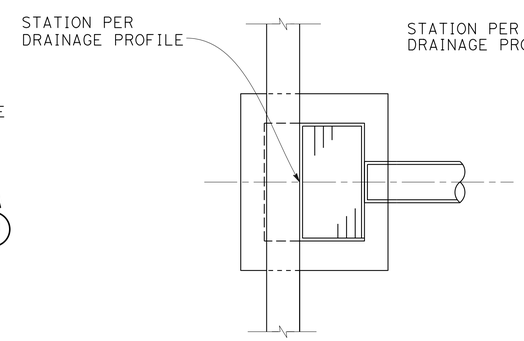

PLAN

INLET WITHIN HMA SIDE GUTTER

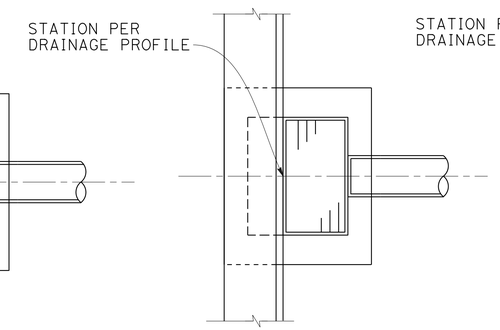

PLAN

INLET ADJACENT TO CURB

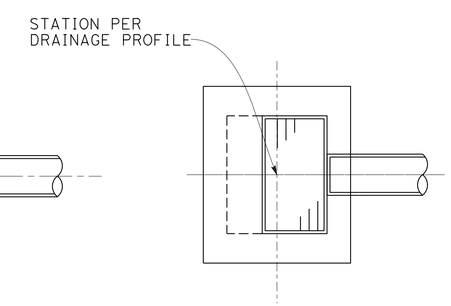

PLAN

FIELD INLET OR MANHOLE

DRAINAGE DETAILS

NO SCALE

DD-1

STATE OF CALIFORNIA - DEPARTMENT OF TRANSPORTATION
Caltrans®
HYDRAULICS

FUNCTIONAL SUPERVISOR: JOSEPH PETERSON
CALCULATED-DESIGNED BY: CRAIG TOMIMATSU
CHECKED BY: PAUL SNYDER
REVISED BY: CT
DATE REVISED: 12/6/13

LAST REVISION 02-19-14
DATE PLOTTED => 24-JUN-2015
TIME PLOTTED => 13:53

Dist	COUNTY	ROUTE	POST MILES TOTAL PROJECT	SHEET No.	TOTAL SHEETS
04	Ala	580	R33.4	15	91

Craig M Tomimatsu 3/24/14
REGISTERED CIVIL ENGINEER DATE

6-22-15
PLANS APPROVAL DATE

REGISTERED PROFESSIONAL ENGINEER Craig M. Tomimatsu No. 43072 Exp. 3-31-16 CIVIL STATE OF CALIFORNIA

THE STATE OF CALIFORNIA OR ITS OFFICERS OR AGENTS SHALL NOT BE RESPONSIBLE FOR THE ACCURACY OR COMPLETENESS OF SCANNED COPIES OF THIS PLAN SHEET.

LEGEND: (FOR THIS SHEET ONLY)

REMOVE Conc

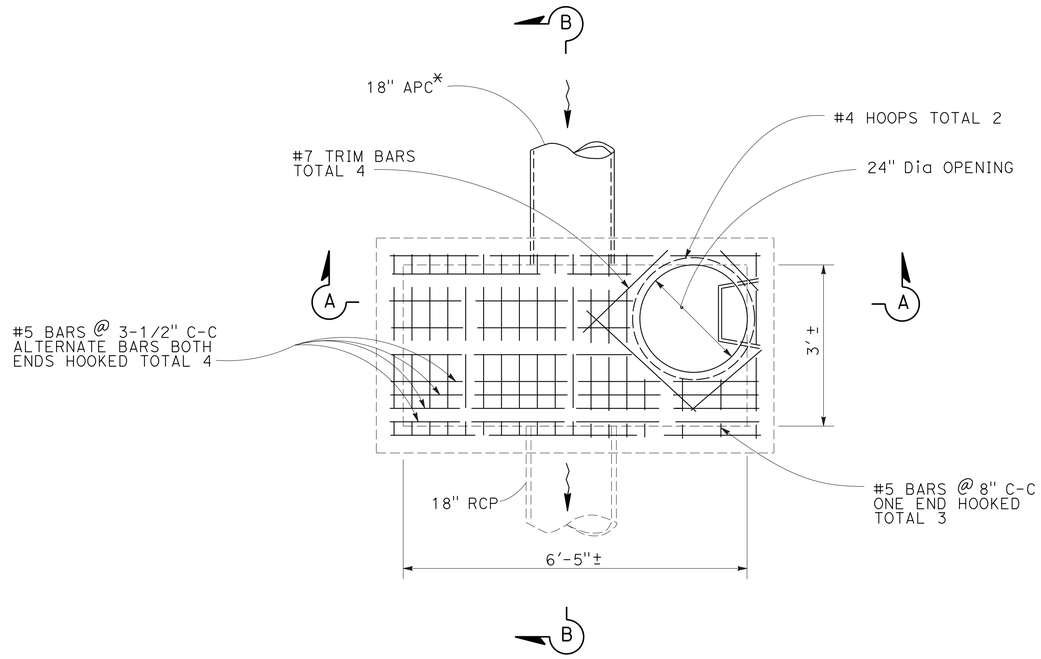

PLAN

* LOCATE OPPOSITE OUTLET PIPE

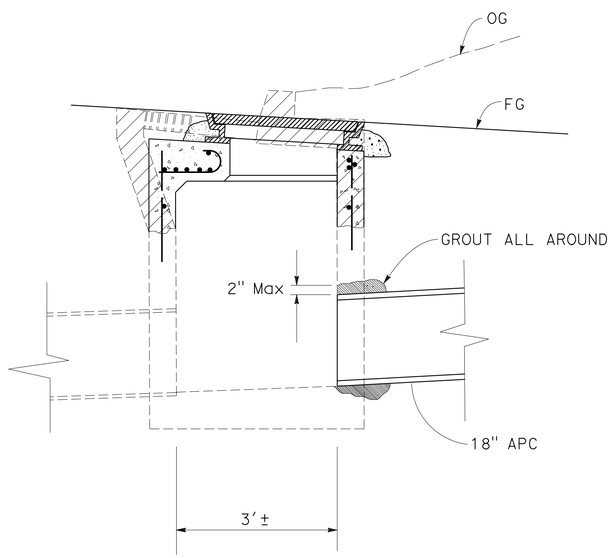

SECTION B-B

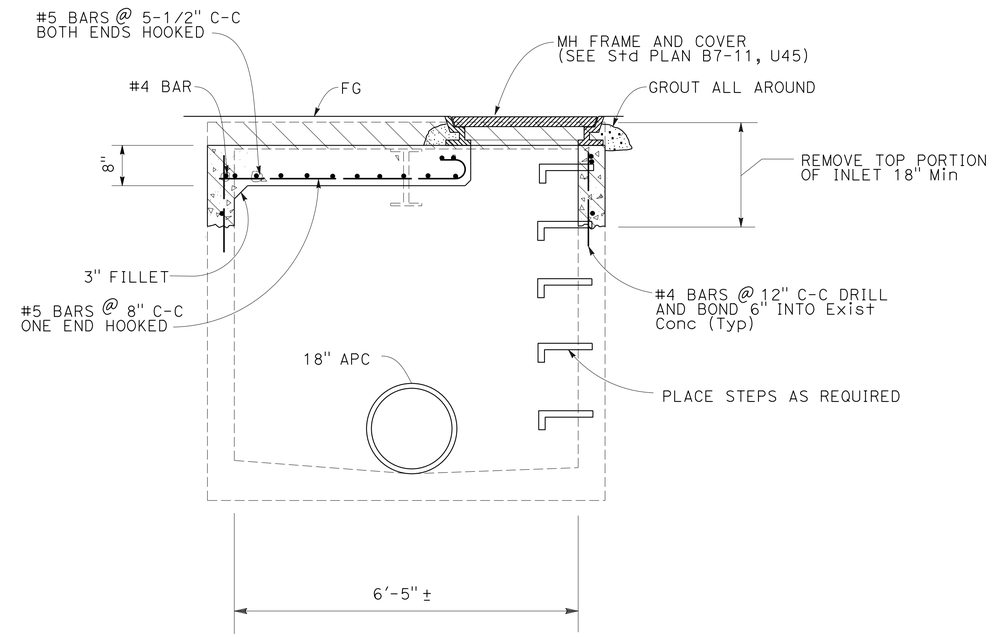

SECTION A-A

ADJUST INLET WITH MANHOLE COVER

1 a

DRAINAGE DETAILS

NO SCALE

DD-2

STATE OF CALIFORNIA - DEPARTMENT OF TRANSPORTATION
Caltrans
HYDRAULICS

FUNCTIONAL SUPERVISOR: JOSEPH PETERSON

CALCULATED-DESIGNED BY: CRAIG TOMIMATSU
CHECKED BY: PAUL SNYDER

REVISED BY: CT
DATE REVISED: 12/10/13

LAST REVISION 03-05-14 | DATE PLOTTED => 24-JUN-2015 | TIME PLOTTED => 13:53

Dist	COUNTY	ROUTE	POST MILES TOTAL PROJECT	SHEET No.	TOTAL SHEETS
04	Ala	580	R33.4	16	91

Paul Snyder 3/24/14
REGISTERED CIVIL ENGINEER DATE

6-22-15
PLANS APPROVAL DATE

REGISTERED PROFESSIONAL ENGINEER Paul Alan Snyder No. 41128 Exp. 3-31-17 CIVIL STATE OF CALIFORNIA

THE STATE OF CALIFORNIA OR ITS OFFICERS OR AGENTS SHALL NOT BE RESPONSIBLE FOR THE ACCURACY OR COMPLETENESS OF SCANNED COPIES OF THIS PLAN SHEET.

NOTES:

1. ALLOWABLE ALTERNATIVE PIPES ARE PLASTIC PIPE (SMOOTH INTERIOR WALL TYPES) AND RCP.
2. PIPE JOINTS SHALL BE WATERTIGHT TYPE JOINTS.

DRAINAGE QUANTITIES

DRAINAGE SYSTEM No. ⬡	DRAINAGE UNIT ◯	MINOR CONCRETE (MINOR STRUCTURE) *	MISCELLANEOUS IRON AND STEEL	18" APC	ADJUST INLET	FRAMES AND GRATES (TYPE 24-12) [N]	MANHOLE FRAME AND COVER (TYPE U45) [N]	MAXIMUM COVER [N]	HEIGHT OF INLET [N]	DESCRIPTION	STATION
		CY	LBS	FT	EA			FT			
1	a		435		1		1			ADJUST INLET w/ MANHOLE COVER	25.84′ Lt NR 87+83.375
	b			3				3.1		18" APC	27′ TO 30′ Lt NR 87+84
	c	2.85	326			1			4.8	G2 INLET w/ SID	32′ Lt NR 87+84
	d			47				3.4		18" APC	32′ Lt NR 87+84 TO 31.85′ Lt NR 88+34
	e	2.08	326			1			3.3	G1 INLET w/ SID	31.85′ Lt NR 88+34
TOTAL		4.93	1087	50	1	2	1				

[N] - NOT A SEPARATE PAY ITEM, FOR INFORMATION ONLY
* - DRAINAGE INLETS, INCLUDING PCC INLET DEPRESSIONS

CALCULATED-DESIGNED BY: PAUL SNYDER
CHECKED BY: JIIN-TIAN TENG
REVISED BY: PS
DATE REVISED: 12/6/13
FUNCTIONAL SUPERVISOR: ALBERT ZEPEDA

STATE OF CALIFORNIA - DEPARTMENT OF TRANSPORTATION
Caltrans
DESIGN

DRAINAGE QUANTITIES

DQ-1

LAST REVISION 03-10-14
DATE PLOTTED => 24-JUN-2015
TIME PLOTTED => 13:53

Dist	COUNTY	ROUTE	POST MILES TOTAL PROJECT	SHEET No.	TOTAL SHEETS
04	Ala	580	R33.4	17	91

Paul Snyder 3/24/14
REGISTERED CIVIL ENGINEER DATE

6-22-15
PLANS APPROVAL DATE

REGISTERED PROFESSIONAL ENGINEER Paul Alan Snyder No. 41128 Exp. 3-31-17 CIVIL STATE OF CALIFORNIA

THE STATE OF CALIFORNIA OR ITS OFFICERS OR AGENTS SHALL NOT BE RESPONSIBLE FOR THE ACCURACY OR COMPLETENESS OF SCANNED COPIES OF THIS PLAN SHEET.

NOTE:

FOR ACCURATE RIGHT OF WAY DATA, CONTACT RIGHT OF WAY ENGINEERING AT THE DISTRICT OFFICE.

LEGEND:

UTILITIES	EXISTING UTILITIES	OWNERSHIP
POTHOLE	o	
HIGH PRESSURE GAS	-g——g-	PG&E (PACIFIC GAS & ELECTRIC)
WATER	—w——w—	PG&E (PACIFIC GAS & ELECTRIC)
CABLE	-tc——(oh)	EBMUD (EAST BAY MUNICIPAL UTILITY DISTRICT)
TELEPHONE	-t——t-	COMCAST
ELECTRIC	-e——(oh)	AT&T (AMERICAN TELEPHONE & TELEGRAPH)
		PG&E (PACIFIC GAS & ELECTRIC)

NOTE:

LOCATION OF UTILITY FACILITIES SHOWN ON THESE PLANS ARE APPROXIMATE AND WERE OBTAINED FROM OWNERS RECORDS. CONTRACTOR TO VERIFY PRIOR TO CONSTRUCTION.

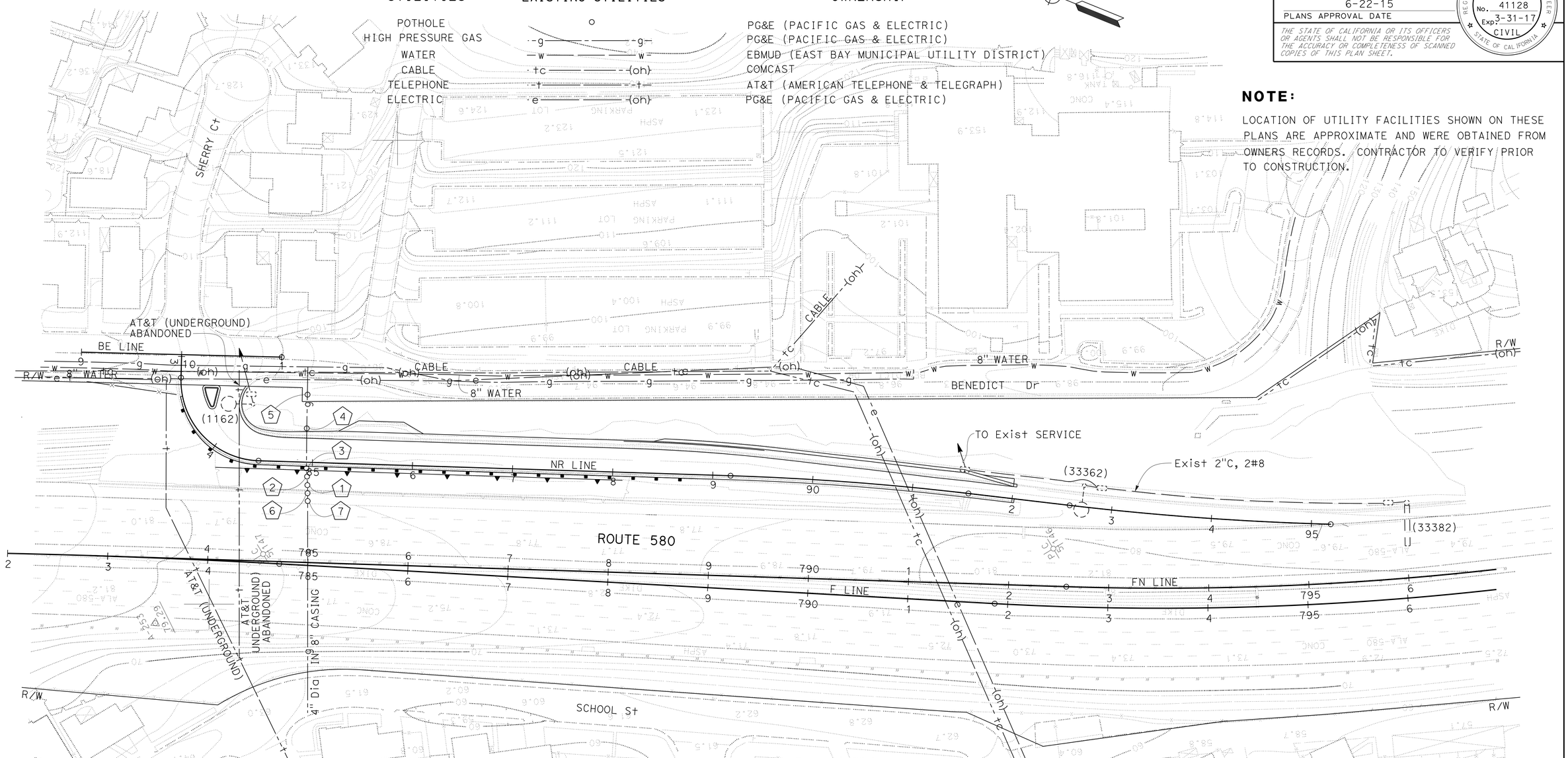

POSITIVE LOCATION INFORMATION

No.	UTILITY	SURFACE ELEVATION	DEPTH	METHOD	LOCATION	NORTHING	EASTING
1	g-PG&E	92.0	8.1	POTHOLING	22.55′ R+ NR 84+96.01	447453.686	1528147.425
2	g-PG&E	95.8	8.5	POTHOLING	15.16′ R+ NR 84+95.39	447456.833	1528154.142
3	g-PG&E	100	12.8	POTHOLING	5.84′ R+ NR 84+94.06	447461.308	1528162.422
4	g-PG&E	99.9	5.4	POTHOLING	33.84′ L+ NR 84+93.32	447475.76	1528199.388
5	g-PG&E	98.9	3.3	POTHOLING	67.72′ L+ NR 84+92.86	447487.94	1528231.003
6	g-PG&E	78.3	13.7	ELECTRONIC DETECTION	29′ R+ NR 84+94		
7	g-PG&E	78.3	11.0		35′ R+ NR 84+94		

APPROVED FOR UTILITY INFORMATION ONLY

UTILITY PLAN

SCALE: 1" = 50′

U-1

STATE OF CALIFORNIA - DEPARTMENT OF TRANSPORTATION
Caltrans® DESIGN

FUNCTIONAL SUPERVISOR: ALBERT ZEPEDA
CALCULATED-DESIGNED BY: JIIN-TIAN TENG
CHECKED BY: PAUL SNYDER
REVISED BY: PS
DATE REVISED: 11/5/13

LAST REVISION DATE PLOTTED => 24-JUN-2015
TIME PLOTTED => 13:53
02-19-14

Dist	COUNTY	ROUTE	POST MILES TOTAL PROJECT	SHEET No.	TOTAL SHEETS
04	Ala	580	R33.4	18	91

Claudia K. Fang 3/24/14
REGISTERED CIVIL ENGINEER DATE

6-22-15
PLANS APPROVAL DATE

REGISTERED PROFESSIONAL ENGINEER
Claudia K. Fang
No. 80493
Exp. 3-31-17
CIVIL
STATE OF CALIFORNIA

THE STATE OF CALIFORNIA OR ITS OFFICERS OR AGENTS SHALL NOT BE RESPONSIBLE FOR THE ACCURACY OR COMPLETENESS OF SCANNED COPIES OF THIS PLAN SHEET.

NOTE:

EXACT LOCATION AND POSITION OF CONSTRUCTION AREA SIGNS TO BE DETERMINED BY THE ENGINEER.

LEGEND:

CONSTRUCTION AREA SIGN

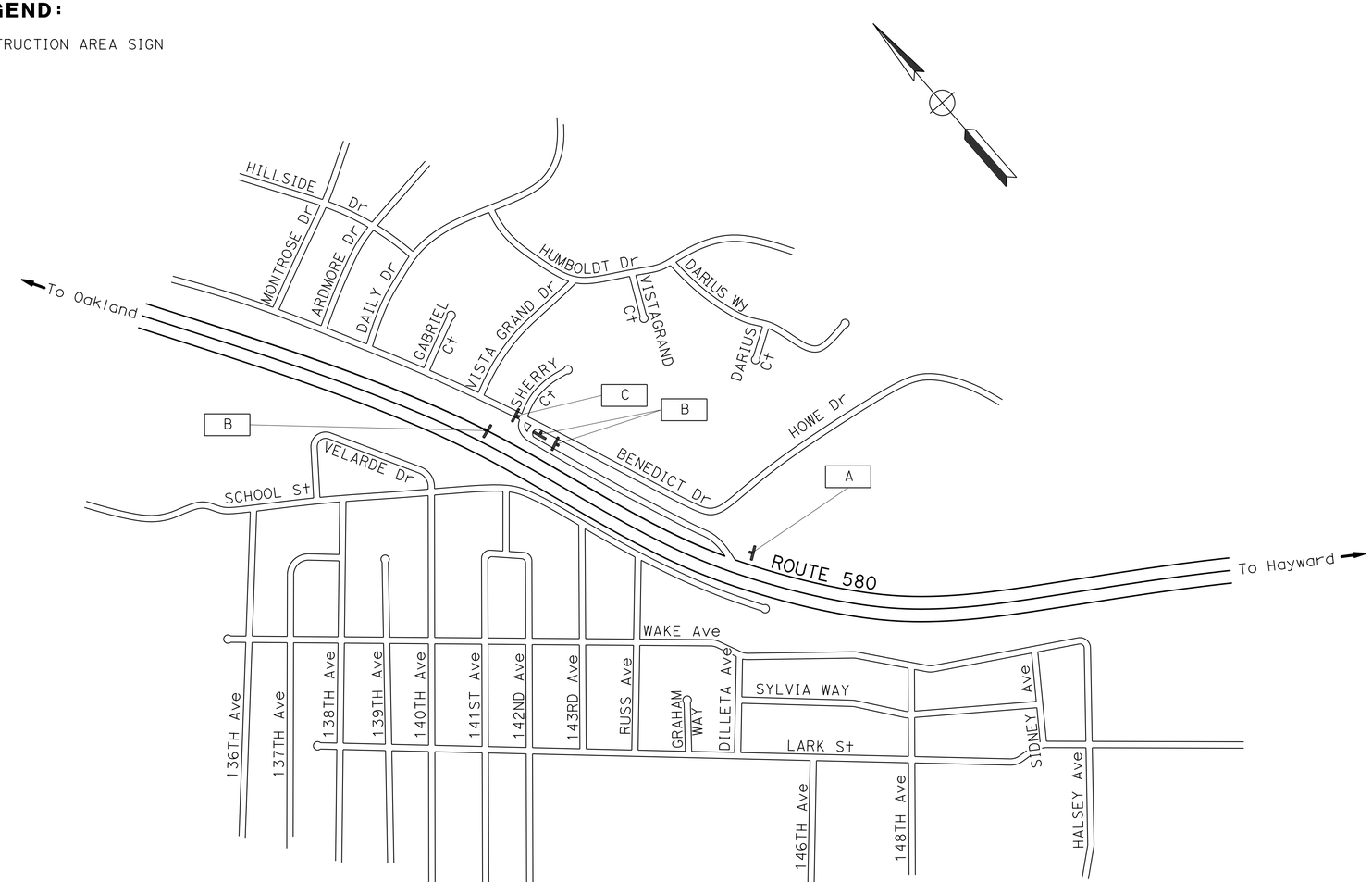

STATIONARY MOUNTED CONSTRUCTION AREA SIGNS

SIGN LETTER	SIGN CODE	PANEL SIZE	SIGN MESSAGE	NUMBER OF POSTS AND SIZE	NUMBER OF SIGNS
A	W20-1	48" x 48"	ROAD WORK AHEAD	1 - 4" x 6"	1
B	G20-2	48" x 24"	END ROAD WORK	1 - 4" x 4"	3
C	W20-1	36" x 36"	ROAD WORK AHEAD	1 - 4" x 6"	1

APPROVED FOR CONSTRUCTION AREA SIGN WORK ONLY

CONSTRUCTION AREA SIGNS

NO SCALE

CS-1

REVISED BY	DATE REVISED
CF	11/19/13

CALCULATED-DESIGNED BY: CLAUDIA FANG
CHECKED BY: PARWIN SARWARY
FUNCTIONAL SUPERVISOR: LOURDES DAVID

STATE OF CALIFORNIA - DEPARTMENT OF TRANSPORTATION
Caltrans®
TRAFFIC

LAST REVISION 11-19-13
DATE PLOTTED => 24-JUN-2015
TIME PLOTTED => 13:53

Dist	COUNTY	ROUTE	POST MILES TOTAL PROJECT	SHEET No.	TOTAL SHEETS
04	Ala	580	R33.4	19	91

Paul Snyder 3/24/14
REGISTERED CIVIL ENGINEER DATE

6-22-15
PLANS APPROVAL DATE

REGISTERED PROFESSIONAL ENGINEER Paul Alan Snyder No. 41128 Exp. 3-31-17 CIVIL STATE OF CALIFORNIA

THE STATE OF CALIFORNIA OR ITS OFFICERS OR AGENTS SHALL NOT BE RESPONSIBLE FOR THE ACCURACY OR COMPLETENESS OF SCANNED COPIES OF THIS PLAN SHEET.

CONSTRUCTION AREA SIGNS

SHEET No.	STATION	LOCATION	SIGN LETTER	SIGN CODE	PANEL SIZE	SIGN MESSAGE	No. OF POSTS & SIZE	No. OF SIGNS	REMARKS
SC-1	BE 4+00	R†	D	C27(CA)	36" x 36"	OPEN TRENCH	1-4" x 6"	1	
				W16-9P	24" x 18"	AHEAD		1	BLACK ON ORANGE
	BE 7+00	R†	E	C27(CA)	36" x 36"	OPEN TRENCH	1-4" x 6"	1	
				W16-2P	24" x 18"	300 FEET		1	
	BE 10+25	R†	F	C27(CA)	36" x 36"	OPEN TRENCH	1-4" x 6"	1	
	NR 83+75	CENTER	F	C27(CA)	36" x 36"	OPEN TRENCH	1-4" x 6"	1	
	NR 87+00	L† & R†	E	C27(CA)	36" x 36"	OPEN TRENCH	1-4" x 6"	2	
				W16-2P	24" x 18"	300 FEET		2	
	NR 90+00	L† & R†	D	C27(CA)	36" x 36"	OPEN TRENCH	1-4" x 6"	2	
				W16-9P	24" x 18"	AHEAD		2	BLACK ON ORANGE
	NR 95+00	R†	G	C12(CA)	48" x 48"	NARROW LANE	1-4" x 6"	1	
				W13-2	48" x 60"	EXIT, 25 MPH		1	BLACK ON ORANGE
	FN 805+00	R†	H	E5-3	48" x 36"	EXIT ONLY	1-4" x 6"	1	BLACK ON ORANGE
				C12(CA)	48" x 48"	NARROW LANE		1	
				W16-9P	24" x 18"	AHEAD		1	BLACK ON ORANGE
SC-2	NR 84+05	L†	F	C27(CA)	36" x 36"	OPEN TRENCH	1-4" x 6"	1	
	NR 84+20	L†	K	W1-6(R†)	48" x 24"		1-4" x 4"	1	
				TYPE N-1(CA)	18" x 18"			1	
	NR 87+00	L†	E	C27(CA)	36" x 36"	OPEN TRENCH	1-4" x 6"	1	
				W16-2P	24" x 18"	300 FEET		1	
	NR 90+00	L†	D	C27(CA)	36" x 36"	OPEN TRENCH	1-4" x 6"	1	
				W16-9P	24" x 18"	AHEAD		1	BLACK ON ORANGE
	FN 793+30	GORE	I	C30A(CA)	48" x 48"	SHOULDER CLOSED	1-4" x 6"	1	
	FN 803+30	R†	J	C30A(CA)	48" x 48"	SHOULDER CLOSED	1-4" x 6"	1	
				W16-9P	24" x 18"	AHEAD		1	BLACK ON ORANGE
SC-3	NR 83+75	R†	K	W1-6(R†)	48" x 24"		1-4" x 4"	1	
				TYPE N-1(CA)	18" x 18"			1	
	FN 797+00	R†	I	C30A(CA)	48" x 48"	SHOULDER CLOSED	1-4" x 6"	1	
SC-4	BE 4+00	R†	D	C27(CA)	36" x 36"	OPEN TRENCH	1-4" x 6"	1	
				W16-9P	24" x 18"	AHEAD		1	BLACK ON ORANGE
	BE 7+00	R†	E	C27(CA)	36" x 36"	OPEN TRENCH	1-4" x 6"	1	
				W16-2P	24" x 18"	300 FEET		1	
	BE 10+25	R†	F	C27(CA)	36" x 36"	OPEN TRENCH	1-4" x 6"	1	
	NR 83+75	CENTER	F	C27(CA)	36" x 36"	OPEN TRENCH	1-4" x 6"	1	
	NR 87+00	L† & R†	E	C27(CA)	36" x 36"	OPEN TRENCH	1-4" x 6"	2	
				W16-2P	24" x 18"	300 FEET		2	
	NR 90+00	L† & R†	D	C27(CA)	36" x 36"	OPEN TRENCH	1-4" x 6"	2	
				W16-9P	24" x 18"	AHEAD		2	BLACK ON ORANGE

STATE OF CALIFORNIA - DEPARTMENT OF TRANSPORTATION
Caltrans® DESIGN

FUNCTIONAL SUPERVISOR: ALBERT ZEPEDA
CALCULATED-DESIGNED BY: PAUL SNYDER
CHECKED BY: JIIN-TIAN TENG
REVISED BY: PS
DATE REVISED: 12/23/13

LAST REVISION 02-20-14 | DATE PLOTTED => 24-JUN-2015 | TIME PLOTTED => 13:53

CONSTRUCTION AREA SIGNS

CS-2

Dist	COUNTY	ROUTE	POST MILES TOTAL PROJECT	SHEET No.	TOTAL SHEETS
04	Ala	580	R33.4	20	91

Paul Snyder 3/24/14
REGISTERED CIVIL ENGINEER DATE

6-22-15
PLANS APPROVAL DATE

REGISTERED PROFESSIONAL ENGINEER Paul Alan Snyder No. 41128 Exp. 3-31-17 CIVIL STATE OF CALIFORNIA

THE STATE OF CALIFORNIA OR ITS OFFICERS OR AGENTS SHALL NOT BE RESPONSIBLE FOR THE ACCURACY OR COMPLETENESS OF SCANNED COPIES OF THIS PLAN SHEET.

NOTE:

FOR ACCURATE RIGHT OF WAY DATA, CONTACT RIGHT OF WAY ENGINEERING AT THE DISTRICT OFFICE.

LEGEND:

- CONSTRUCT THIS STAGE
- PORTABLE DELINEATORS
- OBJECT MARKER (TYPE P)
- CHANNELIZERS
- (No.) CURVE DATA NUMBER
- CONSTRUCTION AREA SIGN
- [No.] STRUCTURAL SECTION NUMBER

CONSTRUCTION STAGE 1

1. REMOVE ISLAND, CURB, GUTTER AND EXCAVATE.
2. PLACE AGGREGATE BASE AND HMA.
3. COMPLETE THIS STAGE IN 3 CALENDAR DAYS OR LESS.

NOTE:

1. RAMP LANE 12' TYPICAL, 10' Min.
2. FOR CONSTRUCTION AREA SIGNS, SEE SHEET SCQ-1.

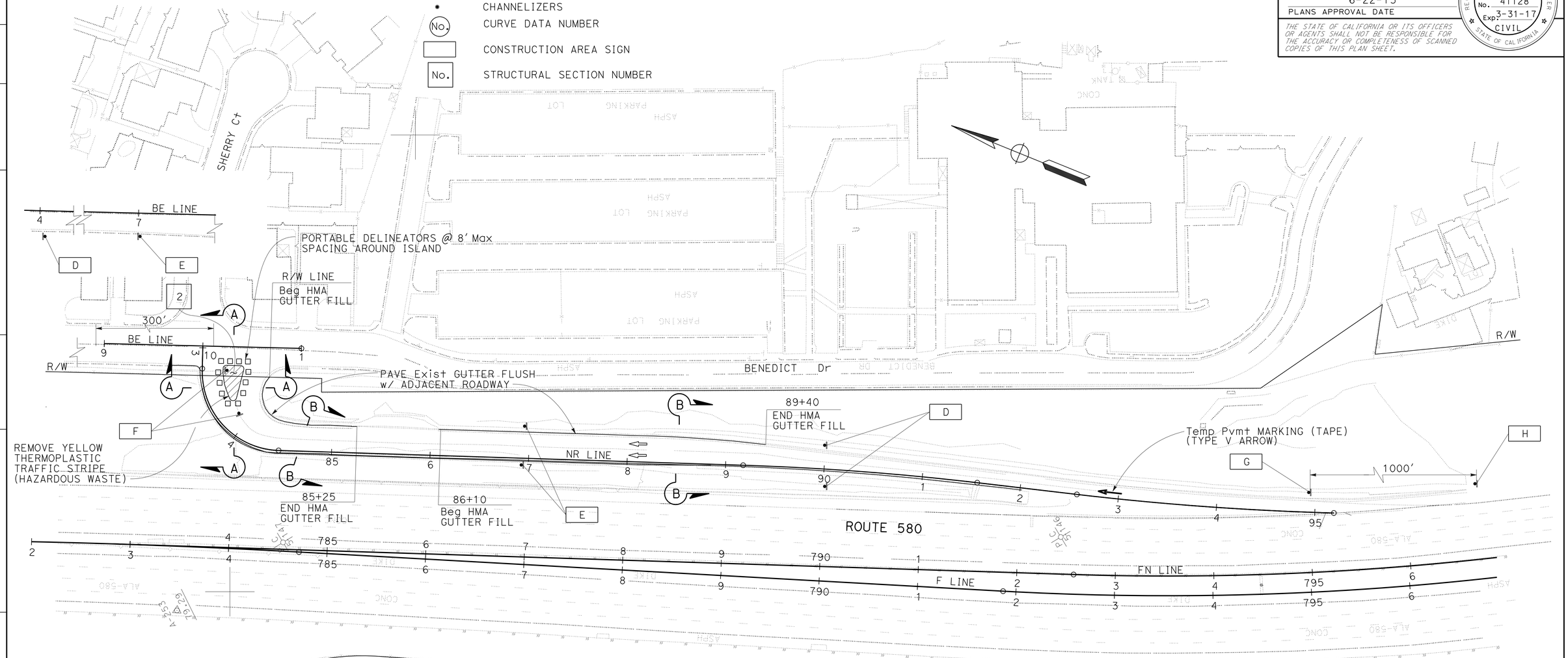

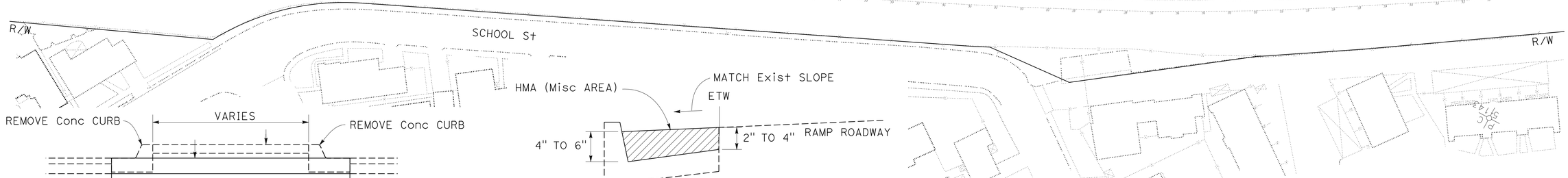

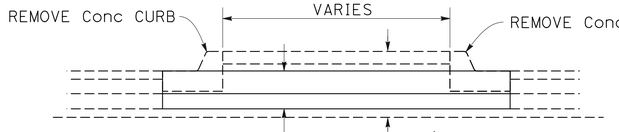

SECTION A-A
NO SCALE

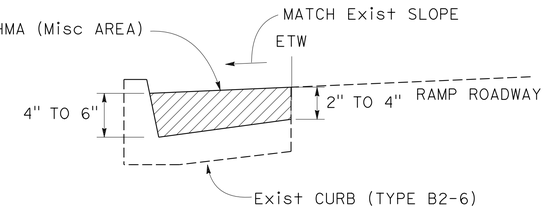

SECTION B-B
NO SCALE

STAGE CONSTRUCTION AND TRAFFIC HANDLING PLAN

STAGE 1

SCALE: 1" = 50'

APPROVED FOR STAGE CONSTRUCTION AND TRAFFIC HANDLING WORK ONLY

SC-1

STATE OF CALIFORNIA - DEPARTMENT OF TRANSPORTATION
Caltrans®
DESIGN

FUNCTIONAL SUPERVISOR: ALBERT ZEPEDA
CALCULATED-DESIGNED BY: PAUL SNYDER
CHECKED BY: JIIN-TIAN TENG
REVISED BY: PS
DATE REVISED: 11/18/13

LAST REVISION 03-10-14
DATE PLOTTED => 24-JUN-2015
TIME PLOTTED => 13:53

Dist	COUNTY	ROUTE	POST MILES TOTAL PROJECT	SHEET No.	TOTAL SHEETS
04	Ala	580	R33.4	21	91

Paul Snyder 3/24/14
REGISTERED CIVIL ENGINEER DATE

6-22-15
PLANS APPROVAL DATE

REGISTERED PROFESSIONAL ENGINEER Paul Alan Snyder No. 41128 Exp. 3-31-17 CIVIL STATE OF CALIFORNIA

THE STATE OF CALIFORNIA OR ITS OFFICERS OR AGENTS SHALL NOT BE RESPONSIBLE FOR THE ACCURACY OR COMPLETENESS OF SCANNED COPIES OF THIS PLAN SHEET.

NOTE:

FOR ACCURATE RIGHT OF WAY DATA, CONTACT RIGHT OF WAY ENGINEERING AT THE DISTRICT OFFICE.

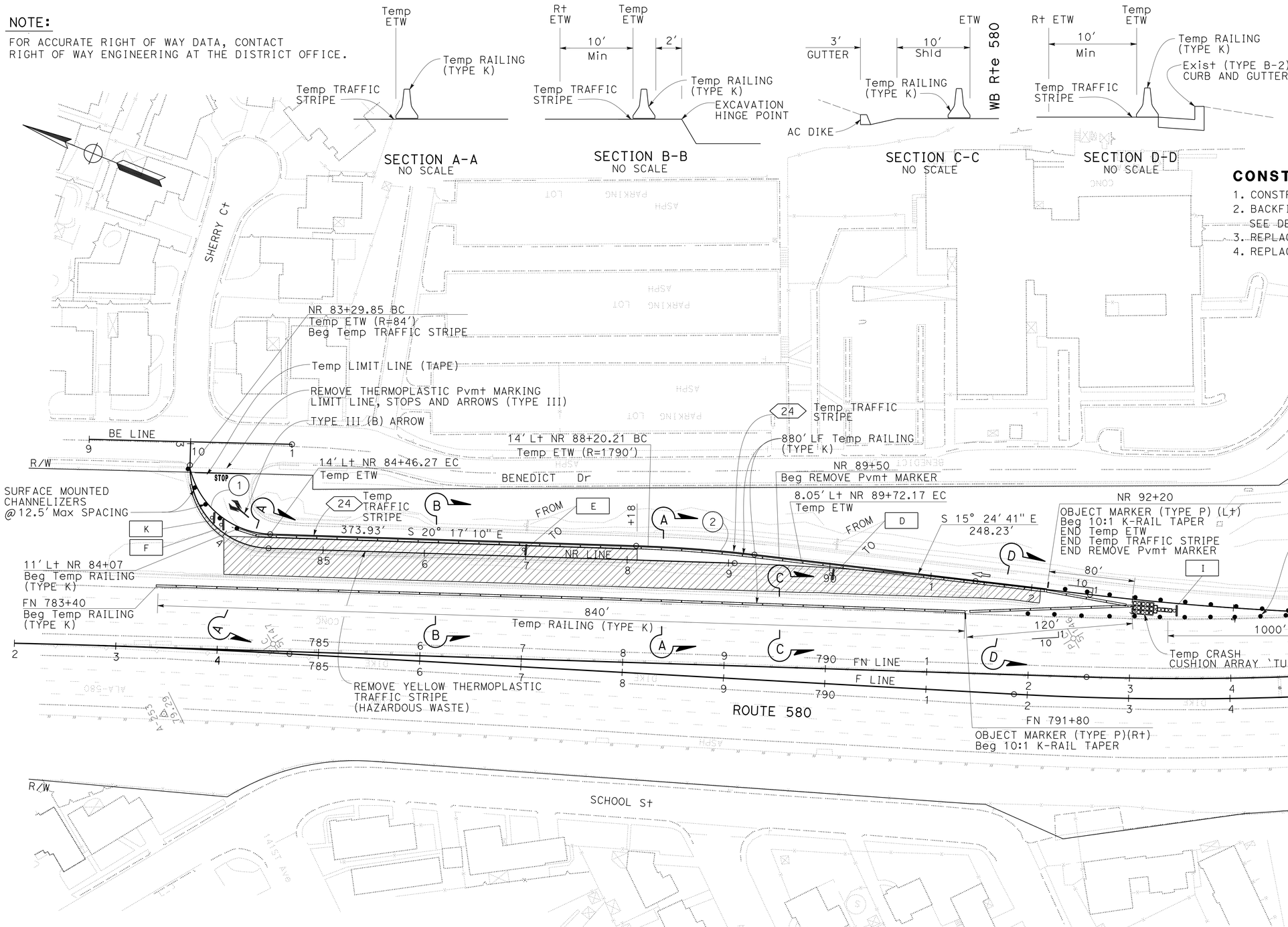

CONSTRUCTION STAGE 2

1. CONSTRUCT Ret WALL.
2. BACKFILL AND PAVE TO STAGE CONSTRUCTION GRADE. SEE DETAIL A ON SHEET X-2.
3. REPLACE Conc CURB AND GUTTER.
4. REPLACE MBGR.

CURVE DATA

No.	R	Δ	T	L	N-COORDINATE	E-COORDINATE
1	84'	71° 05' 26"	60.02'	104.22'	447542.149	1528243.255
2	1790'	04° 52' 29"	76.19'	152.30'	446541.667	1526615.139

APPROVED FOR STAGE CONSTRUCTION AND TRAFFIC HANDLING WORK ONLY

FOR NOTES, ABBREVIATIONS AND LEGEND, SEE SHEET SC-1

STAGE CONSTRUCTION AND TRAFFIC HANDLING PLAN

STAGE 2

SCALE: 1" = 50'

SC-2

STATE OF CALIFORNIA - DEPARTMENT OF TRANSPORTATION
Caltrans DESIGN

FUNCTIONAL SUPERVISOR: ALBERT ZEPEDA
REVISED BY: PS — DATE REVISED: 11/26/13
PAUL SNYDER — JIIN-TIAN TENG
CALCULATED-DESIGNED BY — CHECKED BY

LAST REVISION 02-26-14 — DATE PLOTTED => 24-JUN-2015 — TIME PLOTTED => 13:53

BORDER LAST REVISED 2/1/2013 | USERNAME => s126849 | DGN FILE => 0412000009ma002.dgn | RELATIVE BORDER SCALE IS IN INCHES 0 1 2 3 | UNIT 0727 | PROJECT NUMBER & PHASE 04120000091

Dist	COUNTY	ROUTE	POST MILES TOTAL PROJECT	SHEET No.	TOTAL SHEETS
04	Ala	580	R33.4	22	91

Paul Snyder 3/24/14
REGISTERED CIVIL ENGINEER DATE

6-22-15
PLANS APPROVAL DATE

REGISTERED PROFESSIONAL ENGINEER Paul Alan Snyder No. 41128 Exp. 3-31-17 CIVIL STATE OF CALIFORNIA

THE STATE OF CALIFORNIA OR ITS OFFICERS OR AGENTS SHALL NOT BE RESPONSIBLE FOR THE ACCURACY OR COMPLETENESS OF SCANNED COPIES OF THIS PLAN SHEET.

NOTE:

FOR ACCURATE RIGHT OF WAY DATA, CONTACT RIGHT OF WAY ENGINEERING AT THE DISTRICT OFFICE.

CONSTRUCTION STAGE 3

1. REPLACE Shld AND MVP.

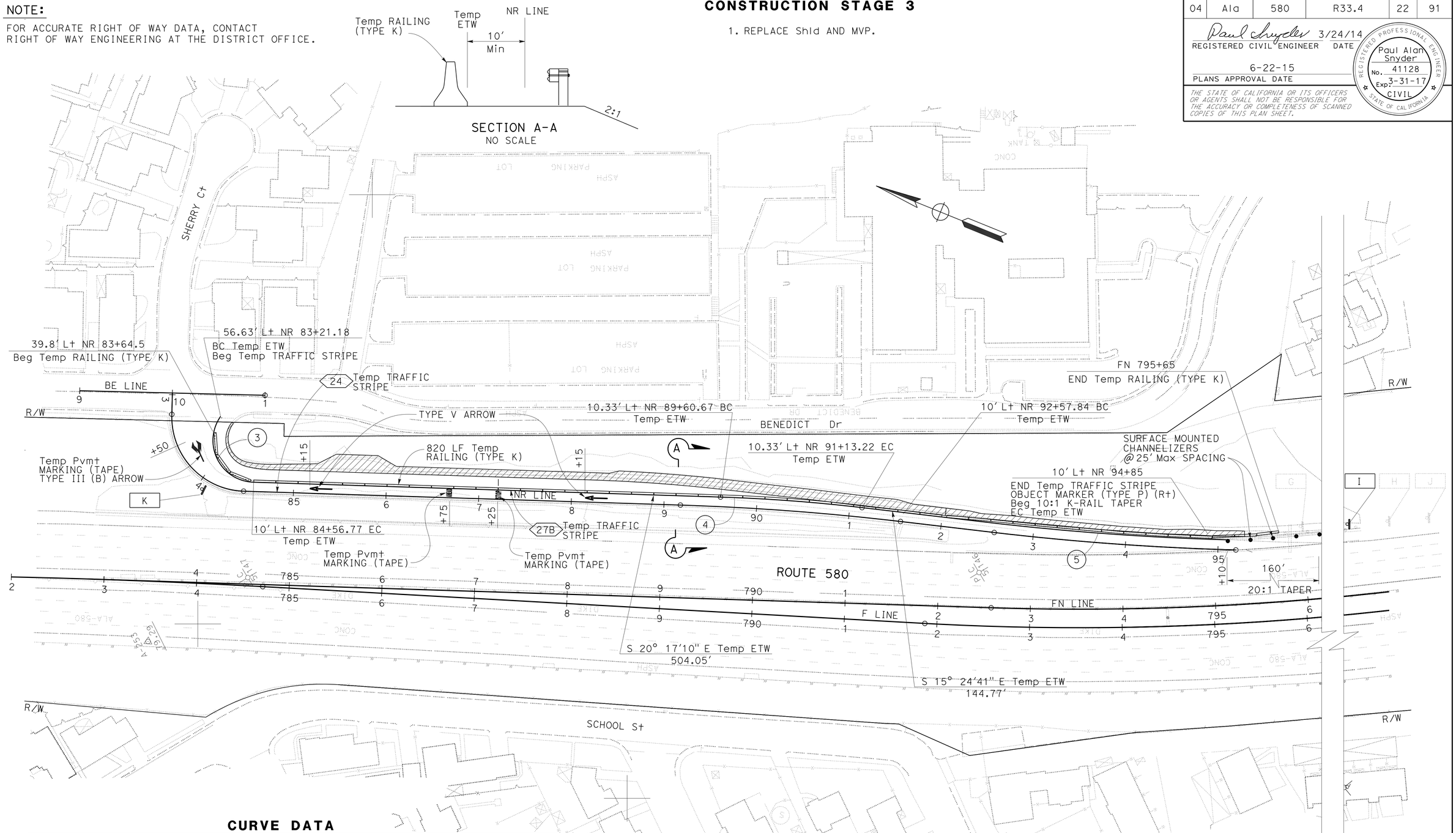

CURVE DATA

No. ⊕	R	Δ	T	L	N-COORDINATE	E-COORDINATE
3	45′	123° 26′ 59″	83.66′	97.28′	447517.682	1528206.451
4	1800′	04° 52′ 29″	76.62′	153.147′	446404.919	1526650.760
5	2911′	04° 27′ 21″	113.25′	226.38′	447517.283	1531230.840

STAGE CONSTRUCTION AND TRAFFIC HANDLING PLAN

STAGE 3

SCALE: 1″ = 50′

APPROVED FOR STAGE CONSTRUCTION AND TRAFFIC HANDLING WORK ONLY

FOR NOTES, ABBREVIATIONS AND LEGEND, SEE SHEET SC-1

SC-3

STATE OF CALIFORNIA - DEPARTMENT OF TRANSPORTATION
Caltrans® DESIGN

FUNCTIONAL SUPERVISOR: ALBERT ZEPEDA
CALCULATED-DESIGNED BY: PAUL SNYDER
CHECKED BY: JIIN-TIAN TENG
REVISED BY: PS
DATE REVISED: 11/25/13

LAST REVISION 02-20-14
DATE PLOTTED => 24-JUN-2015
TIME PLOTTED => 13:53

Dist	COUNTY	ROUTE	POST MILES TOTAL PROJECT	SHEET No.	TOTAL SHEETS
04	Ala	580	R33.4	23	91

Paul Snyder 3/24/14
REGISTERED CIVIL ENGINEER DATE

6-22-15
PLANS APPROVAL DATE

REGISTERED PROFESSIONAL ENGINEER Paul Alan Snyder No. 41128 Exp. 3-31-17 CIVIL STATE OF CALIFORNIA

THE STATE OF CALIFORNIA OR ITS OFFICERS OR AGENTS SHALL NOT BE RESPONSIBLE FOR THE ACCURACY OR COMPLETENESS OF SCANNED COPIES OF THIS PLAN SHEET.

NOTE:

FOR ACCURATE RIGHT OF WAY DATA, CONTACT RIGHT OF WAY ENGINEERING AT THE DISTRICT OFFICE.

CONSTRUCTION STAGE 4

1. CONSTRUCT ISLAND. (IN 3 CALENDAR DAYS OR LESS).
2. REMOVE "OPEN TRENCH" AND "NARROW LANE" CONSTRUCTION SIGNS AFTER ISLAND IS COMPLETE.
3. COLD PLANE AC Pvmt AND PLACE HMA (TYPE A).
4. COMPLETE Pvmt DELINEATION.

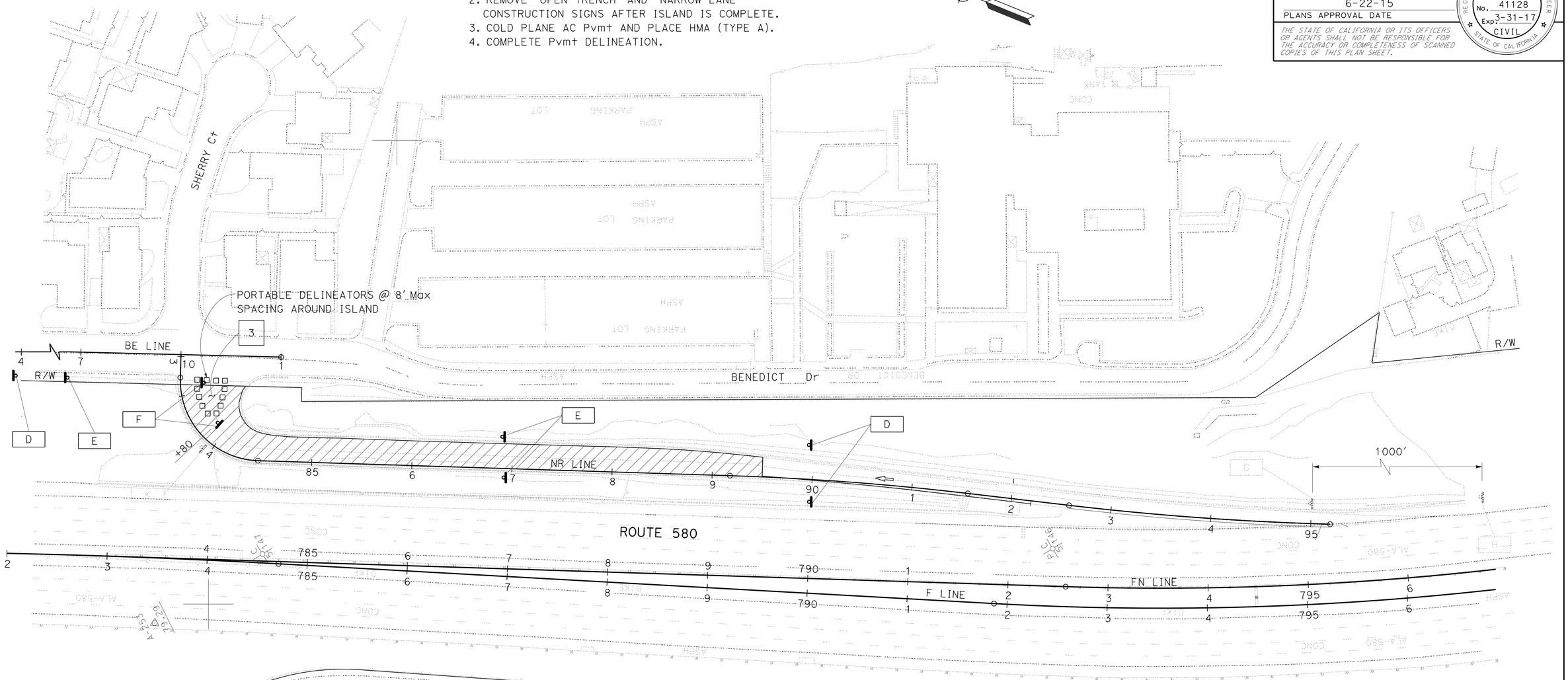

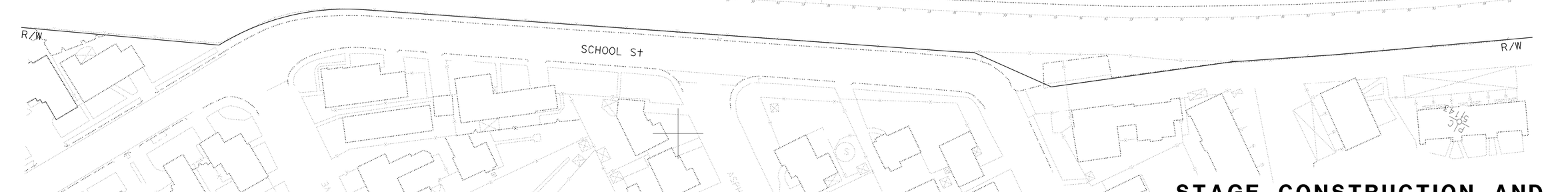

STAGE CONSTRUCTION AND TRAFFIC HANDLING PLAN

STAGE 4

SCALE: 1" = 50'

APPROVED FOR STAGE CONSTRUCTION AND TRAFFIC HANDLING WORK ONLY

FOR NOTES, ABBREVIATIONS AND LEGEND, SEE SHEET SC-1

SC-4

STATE OF CALIFORNIA - DEPARTMENT OF TRANSPORTATION
Caltrans® DESIGN

FUNCTIONAL SUPERVISOR: ALBERT ZEPEDA
CALCULATED-DESIGNED BY: PAUL SNYDER
CHECKED BY: JIIN-TIAN TENG
REVISED BY: PS
DATE REVISED: 12/13/13

LAST REVISION DATE PLOTTED => 24-JUN-2015
TIME PLOTTED => 13:53
02-26-14

Dist	COUNTY	ROUTE	POST MILES TOTAL PROJECT	SHEET No.	TOTAL SHEETS
04	Ala	580	R33.4	24	91

Paul Snyder 3/24/14
REGISTERED CIVIL ENGINEER DATE

6-22-15
PLANS APPROVAL DATE

REGISTERED PROFESSIONAL ENGINEER Paul Alan Snyder No. 41128 Exp. 3-31-17 CIVIL STATE OF CALIFORNIA

THE STATE OF CALIFORNIA OR ITS OFFICERS OR AGENTS SHALL NOT BE RESPONSIBLE FOR THE ACCURACY OR COMPLETENESS OF SCANNED COPIES OF THIS PLAN SHEET.

TEMPORARY TRAFFIC STRIPES AND PAVEMENT MARKINGS

SHEET No.	STATION	LOCATION	DETAIL No. OR PAVEMENT MARKING	REMOVE YELLOW THERMOPLASTIC TRAFFIC STRIPE (HAZARDOUS WASTE)	REMOVE THERMOPLASTIC PAVEMENT MARKING	TEMPORARY TRAFFIC STRIPE (TAPE)	TEMPORARY PAVEMENT MARKING (TAPE)
				LF	SQFT	LF	SQFT
SC-1	NR 83+25 TO 83+68	SOUTH SIDE OF ISLAND		27			
	NR 83+27	FULL WIDTH OFF-RAMP	LIMIT LINE				65
	NR 92+75	CENTER	TYPE V ARROW				33
SC-2	NR 83+20 TO 92+20	LEFT SIDE		900			
	NR 83+24	BOTH SIDES	LIMIT LINE		45		
	NR 83+27	LEFT TO RIGHT	LIMIT LINE				64
	NR 83+34	BOTH SIDES	STOP & STOP		44		
	NR 83+37	BOTH SIDES	STOP				22
	NR 83+50	CENTER	TYPE III (B) ARROW				73
	NR 83+60	LEFT LANE	TYPE III (L) ARROW		42		
	NR 83+75	RIGHT LANE	TYPE III (R) ARROW		42		
	NR 83+30 TO 92+20	LEFT SIDE	DETAIL 24			878	
SC-3	NR 83+28 TO 92+20	LEFT SIDE	DETAIL 24			892	
	NR 83+28 TO 94+85	RIGHT SIDE	DETAIL 27B			1130	
	NR 83+50	CENTER	TYPE III (B) ARROW				73
	NR 85+40	LEFT LANE	TYPE V ARROW				33
	NR 86+75	LEFT LANE	AHEAD				31
	NR 87+25	LEFT LANE	STOP				22
	NR 87+90	LEFT LANE	TYPE V ARROW				33
TOTAL				927	173	2900	449

TEMPORARY RAILING (TYPE K)

SHEET No.	STATION	LOCATION	LF
SC-2	NR 84+07 TO 93+00	L+	880
	FN 783+40 TO 793+00	R+	960
SC-3	NR 83+65 TO 95+65	R+	1180
TOTAL			3020

REMOVE PAVEMENT MARKER

SHEET No.	STATION	LOCATION	EA
SC-2	NR 89+50 TO 92+20	L+ ETW	40
TOTAL			40

CHANNELIZERS (SURFACE MOUNTED)

SHEET No.	STATION	LOCATION	EA
SC-2	NR 83+30 TO 84+07	L+	5
	NR 92+45 TO 94+65	L+	12
	FN 792+00 TO 794+90	R+	16
SC-3	FN 795+10 TO 796+70	R+	9
TOTAL			42

PORTABLE DELINEATORS

SHEET No.	STATION	LOCATION	EA
SC-1	NR 83+18 TO 83+70	CENTER	14
SC-4	NR 83+26 TO 83+70	CENTER	12
TOTAL			26

TEMPORARY CRASH CUSHION MODULE

SHEET No.	STATION	LOCATION	ARRAY	EA
SC-2	NR	L+	TU21	21
TOTAL				21

STAGE CONSTRUCTION QUANTITIES

SCQ-1

STATE OF CALIFORNIA - DEPARTMENT OF TRANSPORTATION
Caltrans® DESIGN

FUNCTIONAL SUPERVISOR: ALBERT ZEPEDA
CALCULATED-DESIGNED BY: PAUL SNYDER
CHECKED BY: JIIN-TIAN TENG
REVISED BY: PS
DATE REVISED: 12/23/13

LAST REVISION 02-20-14 | DATE PLOTTED => 24-JUN-2015 | TIME PLOTTED => 13:53

Dist	COUNTY	ROUTE	POST MILES TOTAL PROJECT	SHEET No.	TOTAL SHEETS
04	Ala	580	R33.4	25	91

REGISTERED CIVIL ENGINEER 3/24/14 DATE

6-22-15
PLANS APPROVAL DATE

REGISTERED PROFESSIONAL ENGINEER Shi F. Lam No. 50970 Exp. 9-30-15 CIVIL STATE OF CALIFORNIA

THE STATE OF CALIFORNIA OR ITS OFFICERS OR AGENTS SHALL NOT BE RESPONSIBLE FOR THE ACCURACY OR COMPLETENESS OF SCANNED COPIES OF THIS PLAN SHEET.

NOTE:

FOR ACCURATE RIGHT OF WAY DATA, CONTACT RIGHT OF WAY ENGINEERING AT THE DISTRICT OFFICE.

LEGEND:

- CHANGE OF PAVEMENT DELINEATION DETAILS
- DELINEATOR (CI 1)
- GUARD RAILING DELINEATOR (TYPE G)

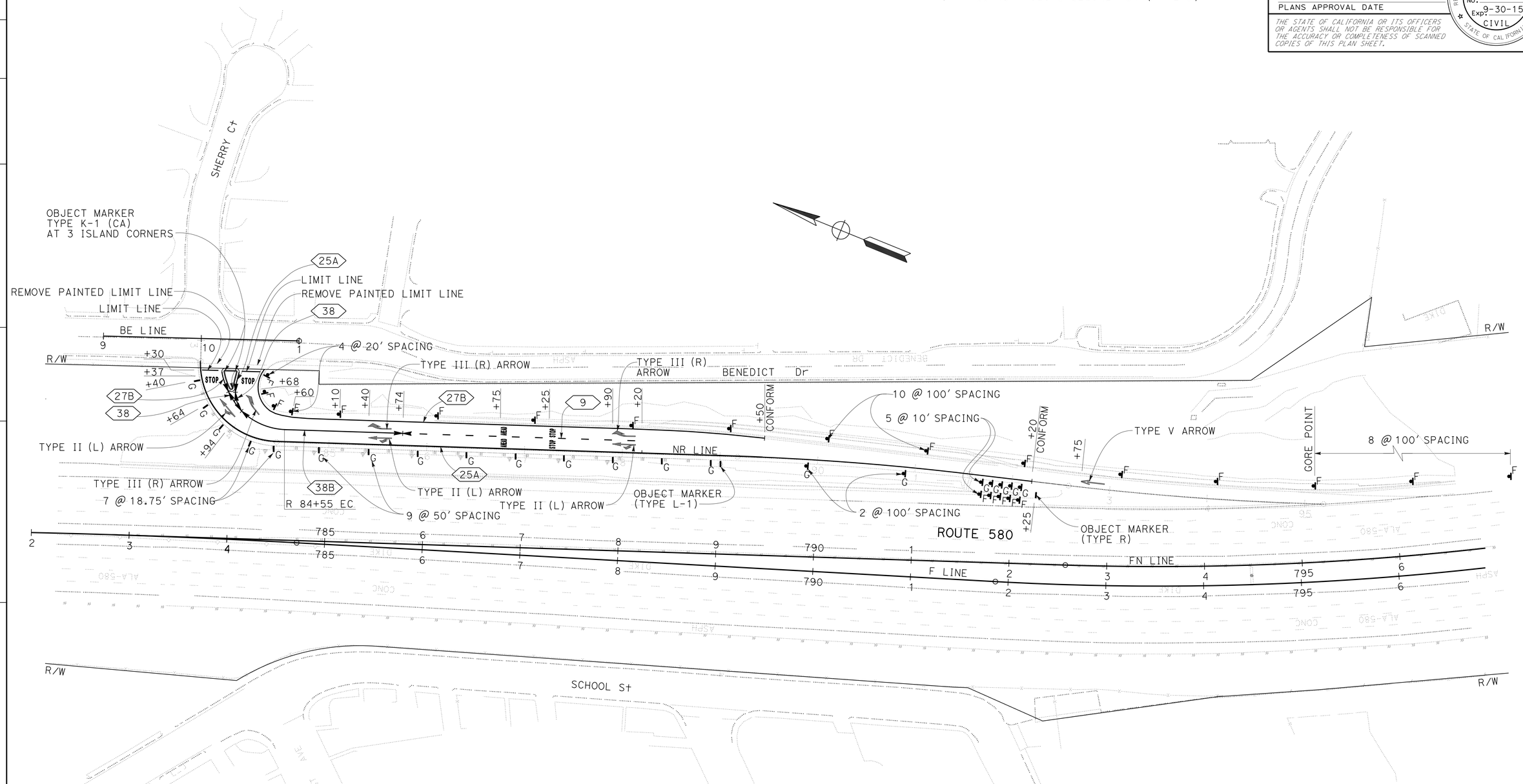

PAVEMENT DELINEATION PLAN

SCALE: 1" = 50'

APPROVED FOR PAVEMENT DELINEATION WORK ONLY

PD-1

REVISED BY	DATE REVISED
PS	12/12/13

CALCULATED- DESIGNED BY: PAUL SNYDER
CHECKED BY: SHI LAM
FUNCTIONAL SUPERVISOR: ALBERT ZEPEDA

STATE OF CALIFORNIA - DEPARTMENT OF TRANSPORTATION
Caltrans
DESIGN

LAST REVISION 03-10-14
DATE PLOTTED => 24-JUN-2015
TIME PLOTTED => 13:53

Dist	COUNTY	ROUTE	POST MILES TOTAL PROJECT	SHEET No.	TOTAL SHEETS
04	Ala	580	R33.4	26	91

Paul Snyder 3/24/14
REGISTERED CIVIL ENGINEER DATE

6-22-15
PLANS APPROVAL DATE

REGISTERED PROFESSIONAL ENGINEER Paul Alan Snyder No. 41128 Exp. 3-31-17 CIVIL STATE OF CALIFORNIA

THE STATE OF CALIFORNIA OR ITS OFFICERS OR AGENTS SHALL NOT BE RESPONSIBLE FOR THE ACCURACY OR COMPLETENESS OF SCANNED COPIES OF THIS PLAN SHEET.

ABBREVIATION:

AITS ALTERNATIVE IN-LINE TERMINAL SYSTEM

TRAFFIC STRIPES, PAVEMENT MARKINGS AND PAVEMENT MARKERS

SHEET No.	STATION	LOCATION	DETAIL No., PAVEMENT MARKING OR MARKERS	THERMOPLASTIC TRAFFIC STRIPE (ENHANCED WET NIGHT VISIBILITY) 4" WHITE SOLID	4" YELLOW SOLID	4" WHITE (BROKEN 17-7)	8" WHITE SOLID	PAVEMENT MARKER (RETROREFLECTIVE) TYPE G	TYPE H	THERMOPLASTIC PAVEMENT MARKING (ENHANCED WET NIGHT VISIBILITY)	DELINEATOR CLASS 1 TYPE F	CLASS 1 TYPE G	GUARD RAILING TYPE G	OBJECT MARKER TYPE K-1 (CA)	TYPE L-1 (CA)	TYPE R	DESCRIPTION/ COMMENT
				LF				EA		SQFT	EA						
PD-1	NR 83+28	BOTH SIDES	LIMIT LINE							45							STOP LINE
	NR 83+30	L† ROADSIDE										1					2' TO 6' FROM ES
	NR 83+30 TO 84+60	R† ROADSIDE									4						2' TO 6' FROM ES
	NR 83+37	BOTH LANES	STOP							44							
	NR 83+30 TO 92+20	L† ETW	25A		890				27								
	NR 83+30 TO 89+50	R† ETW	27B	560													
	NR 83+30 TO 83+64	N SIDE ISLAND	27B	23													
	NR 83+30 TO 83+68	S SIDE ISLAND	25A		26				2								SPACED 25' APART
	NR 83+40 TO 84+50	L† MBGR											7				POST MOUNTED
	NR 84+50 TO 88+85	L† MBGR											9				POST MOUNTED
	NR 83+68 TO 83+94	R† SIDE GORE	38				23	2									
	NR 83+64 TO 83+94	L† SIDE GORE	38				25	2									
	NR 83+96 TO 85+80	CENTER	38B				175	16									
	NR 85+74 TO 88+20	CENTER	9			246		5									
	NR 83+33 TO 83+63	ISLAND NOSES												3			
	NR 83+60	L† LANE	TYPE II (L) ARROW							45							
	NR 83+90	R† LANE	TYPE III (R) ARROW							42							
	NR 85+10 TO 94+10	R† ROADSIDE									10						2' TO 6' FROM ES
	NR 85+40	L† LANE	TYPE II (L) ARROW							45							
	NR 85+40	R† LANE	TYPE III (R) ARROW							42							
	NR 86+75	BOTH LANES	AHEAD							62							
	NR 87+25	BOTH LANES	STOP							44							
	NR 87+90	L† LANE	TYPE II (L) ARROW							45							
	NR 87+90	R† LANE	TYPE III (R) ARROW							42							
	NR 89+00	L† ROADSIDE													1		IN FRONT OF AITS
	NR 89+70 TO 90+70	L† ROADSIDE										2					2' TO 6' FROM ES
	NR 91+70 TO 92+10	L† ROADSIDE										5					2' TO 6' FROM ES
	FN 791+70 TO 792+10	R† ROADSIDE									5						2' TO 6' FROM ES
	NR 92+25	GORE CENTER														1	
	NR 92+75	LANE CENTER	TYPE V ARROW							33							
	NR 95+10 TO FN 102+10	R† ROADSIDE									8						2' TO 6' FROM ES
SUBTOTAL				583	916	246	223	25	29	489	27	8	16	3	1	1	
TOTAL				1968				54		489	35		16	3	1	1	

PAVEMENT DELINEATION QUANTITIES

PDQ-1

STATE OF CALIFORNIA - DEPARTMENT OF TRANSPORTATION
Caltrans® DESIGN

FUNCTIONAL SUPERVISOR: ALBERT ZEPEDA
CALCULATED-DESIGNED BY: JIIN-TIAN TENG
CHECKED BY: PAUL SNYDER
REVISED BY: PS
DATE REVISED: 2/14/14

LAST REVISION 03-24-14 DATE PLOTTED => 24-JUN-2015 TIME PLOTTED => 13:53

Dist	COUNTY	ROUTE	POST MILES TOTAL PROJECT	SHEET No.	TOTAL SHEETS
04	Ala	580	R33.4	27	91

Claudia K. Fang 3/24/14
REGISTERED CIVIL ENGINEER DATE

6-22-15
PLANS APPROVAL DATE

REGISTERED PROFESSIONAL ENGINEER
Claudia K. Fang
No. 80493
Exp. 3-31-17
CIVIL
STATE OF CALIFORNIA

THE STATE OF CALIFORNIA OR ITS OFFICERS OR AGENTS SHALL NOT BE RESPONSIBLE FOR THE ACCURACY OR COMPLETENESS OF SCANNED COPIES OF THIS PLAN SHEET.

NOTE:

EXACT LOCATION AND POSITION OF ROADSIDE SIGNS TO BE DETERMINED BY THE ENGINEER.

LEGEND:

- ✳ ROADSIDE SIGN/OVERHEAD SIGN TO REMAIN
- ■ REMOVE ROADSIDE SIGN
- (No.) ROADSIDE SIGN NUMBER
- ▲ RELOCATE ROADSIDE SIGN

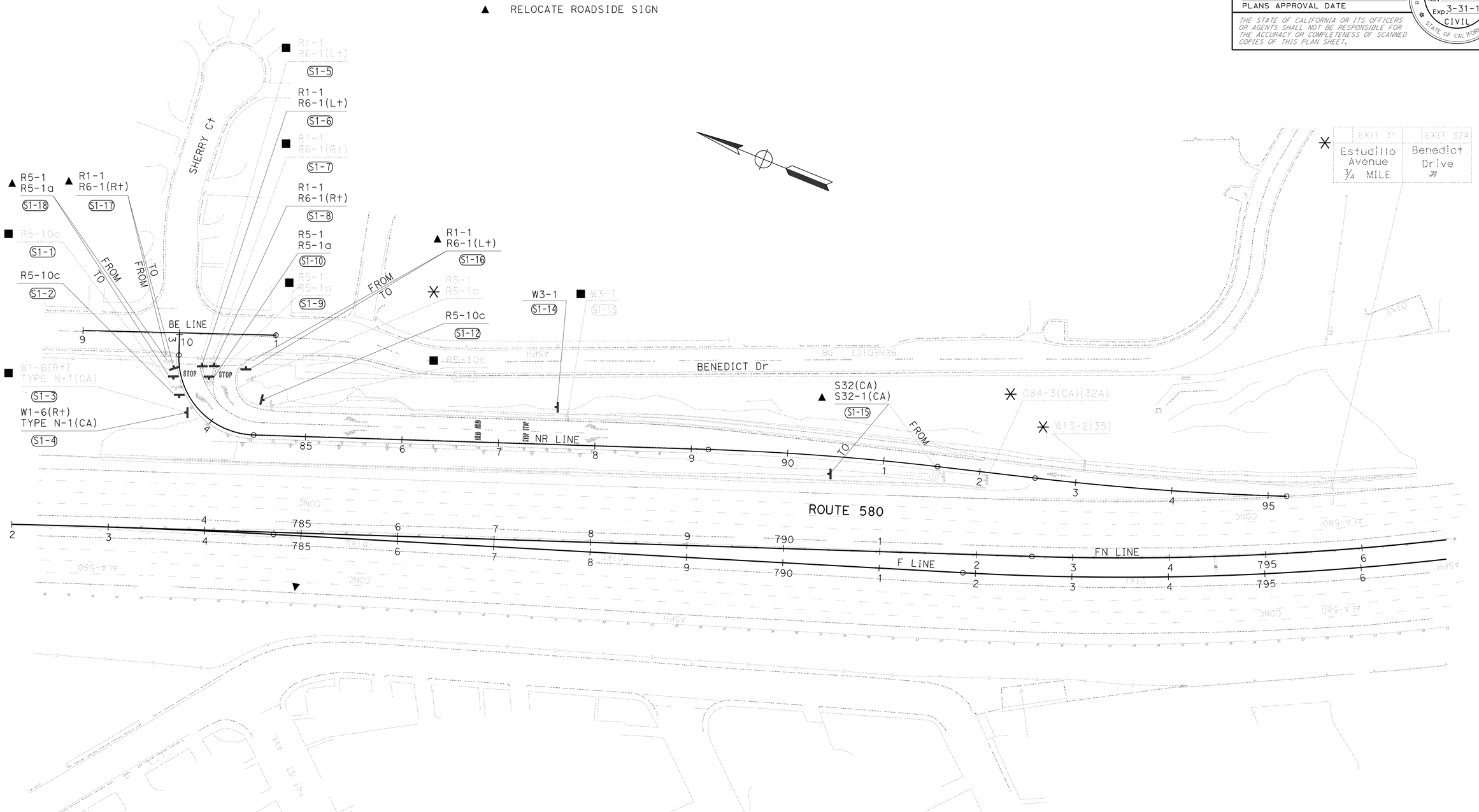

SIGN PLAN
SCALE: 1" = 50'

APPROVED FOR SIGN WORK ONLY

S-1

REVISED BY	DATE REVISED
CF	1/13/14

CLAUDIA FANG — PARWIN SARWARY
CALCULATED-DESIGNED BY — CHECKED BY
FUNCTIONAL SUPERVISOR — LOURDES DAVID

STATE OF CALIFORNIA - DEPARTMENT OF TRANSPORTATION
Caltrans®
TRAFFIC

LAST REVISION 02-20-14
DATE PLOTTED => 24-JUN-2015
TIME PLOTTED => 13:53

Dist	COUNTY	ROUTE	POST MILES TOTAL PROJECT	SHEET No.	TOTAL SHEETS
04	Ala	580	R33.4	28	91

Claudia K. Fang 3/24/14
REGISTERED CIVIL ENGINEER DATE

6-22-15
PLANS APPROVAL DATE

REGISTERED PROFESSIONAL ENGINEER Claudia K. Fang No. 80493 Exp. 3-31-17 CIVIL STATE OF CALIFORNIA

THE STATE OF CALIFORNIA OR ITS OFFICERS OR AGENTS SHALL NOT BE RESPONSIBLE FOR THE ACCURACY OR COMPLETENESS OF SCANNED COPIES OF THIS PLAN SHEET.

ROADSIDE SIGN QUANTITIES AND MATERIALS SUMMARY

SIGN No.	SIGN CODE	PANEL SIZE	POST SIZE AND LENGTH 4" x 4" (FT)	POST SIZE AND LENGTH 4" x 6" (FT)	REMOVE ROADSIDE SIGN (EA)	RELOCATE ROADSIDE SIGN (EA)	ROADSIDE SIGN ONE POST (EA)	FURNISH SINGLE SHEET ALUMINUM SIGN - UNFRAMED 0.063" (SQFT)	FURNISH SINGLE SHEET ALUMINUM SIGN - UNFRAMED 0.080" (SQFT)	BACKGROUND SINGLE FACE	BACKGROUND SHEETING COLOR	BACKGROUND RETROREFLECTIVE ASTM TYPE	LEGEND SHEETING COLOR	LEGEND RETROREFLECTIVE ASTM TYPE	PREMIUM PROTECTIVE FILM	REMARKS
S1-1	R5-10c				1											
S1-2	R5-10c	24" x 12"	11.50				1	2.00		x	WHITE	III	BLACK	PLAIN	x	
S1-3	W1-6(R+)				1											
	TYPE N-1(CA)															
S1-4	W1-6(R+)	48" x 24"	11.83				1		8.00	x	YELLOW	III	BLACK	PLAIN	x	
	TYPE N-1(CA)	18" x 18"						2.25		x	YELLOW	III	BLACK	PLAIN	x	
S1-5	R1-1				1											
	R6-1(L+)															
S1-6	R1-1	30" OCT	11.00				1	5.18		x	RED	IX	WHITE	IX	x	
	R6-1(L+)	36" x 12"						3.00		x	WHITE	III	BLACK	PLAIN	x	
S1-7	R1-1				1											
	R6-1(R+)															
S1-8	R1-1	30" OCT	11.00				1	5.18		x	RED	IX	WHITE	IX	x	
	R6-1(R+)	36" x 12"						3.00		x	WHITE	III	BLACK	PLAIN	x	
S1-9	R5-1				1											
	R5-1A															
S1-10	R5-1	36" x 36"		11.25			1	9.00		x	RED	IX	WHITE	IX	x	
	R5-1A	36" x 24"						6.00		x	RED	IX	WHITE	IX	x	
S1-11	R5-10c															
S1-12	R5-10c	24" x 12"	11.50		1		1	2.00		x	WHITE	III	BLACK	PLAIN	x	
S1-13	W3-1															
S1-14	W3-1	36" x 36"		14.50	1		1	9.00		x	YELLOW	III	WHITE/RED	III	x	
S1-15	S32(CA)					1										
	S32-1(CA)															
S1-16	R1-1					1										
	R6-1(L+)															
S1-17	R1-1					1										
	R6-1(R+)															
S1-18	R5-1					1										
	R5-1a															
TOTAL					7	4	7	46.61	8.00							

SIGN QUANTITIES

SQ-1

STATE OF CALIFORNIA - DEPARTMENT OF TRANSPORTATION
Caltrans
TRAFFIC

FUNCTIONAL SUPERVISOR: LOURDES DAVID
CALCULATED-DESIGNED BY: CLAUDIA FANG
CHECKED BY: PARWIN SARWARY
REVISED BY: CF
DATE REVISED: 1/13/14

LAST REVISION 02-20-14 | DATE PLOTTED => 24-JUN-2015 | TIME PLOTTED => 13:53

Dist	COUNTY	ROUTE	POST MILES TOTAL PROJECT	SHEET No.	TOTAL SHEETS
04	Ala	580	R33.4	29	91

Paul Snyder 3/24/14
REGISTERED CIVIL ENGINEER DATE

6-22-15
PLANS APPROVAL DATE

REGISTERED PROFESSIONAL ENGINEER Paul Alan Snyder No. 41128 Exp. 3-31-17 CIVIL STATE OF CALIFORNIA

THE STATE OF CALIFORNIA OR ITS OFFICERS OR AGENTS SHALL NOT BE RESPONSIBLE FOR THE ACCURACY OR COMPLETENESS OF SCANNED COPIES OF THIS PLAN SHEET.

EARTHWORK QUANTITIES

SHEET No.	STATION	LOCATION	ROADWAY EXCAVATION	EMBANKMENT [N]	IMPORTED BORROW (LIGHTWEIGHT AGGREGATE)	REMARKS
			CY			
L-1, X-1	NR 83+17 TO 83+69	CENTER ISLAND	25			REMOVE Exist ISLAND
	NR 83+28 TO 83+69	CENTER ISLAND	3			AT NEW CURB AROUND ISLAND
	NR 83+39 TO 84+00	Lt Shld	9	15		AT NEW Shld
	NR 83+51 TO 85+25	Rt Shld	43	1		AT NEW Shld
L-1, X-2	NR 84+00 TO 88+20	Lt LANE & SLOPE	2992	1260	1650	AT Ret WALL
	NR 85+25 TO 86+10	Rt Shld	118			AT MVP
L-1, X-3	NR 86+10 TO 92+00	Rt Shld	612			AT NEW Shld
L-1, X-1	NR 88+20 TO 92+02	Lt Shld	114	2		AT NEW Shld
X-3	NR 91+25	Lt Shld	1			AT HMA OVERSIDE DRAIN
C-2	NR 91+50 TO 92+02	Rt Shld	4			AT E-CURB TRANSITION
L-1, C-2, X-3	NR 90+90 TO 92+02	Lt Shld	80			CONTRASTING SURFACE TREATMENT
	NR 92+02 TO 92+20	Lt Shld	3			EXIT NOSE TRANSITION
TOTAL			4004	1278	1650	

[N] NOT A SEPARATE PAY ITEM, FOR INFORMATION ONLY.

REMOVE CONCRETE

SHEET No.	STATION	LOCATION	CURB TYPE A2-8	CURB TYPE B2-6	CURB TYPE E	ISLAND (PORTIONS)
			LF			CY
L-1, X-1, X-4	NR 83+17 TO 83+69	CENTER ISLAND		88		4.5
L-1, X-1, X-2, X-3	NR 83+39 TO 92+02	Lt Shld	865			
L-1, X-1, X-2, X-3	NR 83+51 TO 88+00	Rt Shld		325		
L-1, X-2, X-3	NR 88+00 TO 92+00	Rt Shld			402	
TOTAL			1680			4.5

HOT MIX ASPHALT DIKE

SHEET No.	STATION	LOCATION	TYPE C	TYPE E	HOT MIX ASPHALT (TYPE A)
			LF		TONS
L-1,X-1,X-2,X-3	NR 83+60 TO 91+50	Rt Shld		761	12.3
L-1, X-3	NR 88+60	Lt Shld	240		1.4
TOTAL			240	761	13.7 *

* QUANTITY INCLUDED IN ROADWAY QUANTITIES SUMMARY ON Sht Q-2

COLD PLANE ASPHALT CONCRETE PAVEMENT (0.25 FT)

SHEET No.	STATION	LOCATION	SQYD
L-1, X-1, X-2	NR 83+27 TO 84+75	BOTH LANES	400
L-1, X-2	NR 84+75 TO 88+20	Rt LANE	537
L-1, X-3	NR 88+20 TO 89+50	BOTH LANES	324
TOTAL			1261

REMOVE GUARDRAIL

SHEET No.	STATION	LOCATION	LF
L-1	NR 83+39 TO 88+50	Lt Shld	515
TOTAL			515

END ANCHOR ASSEMBLY (TYPE SFT)

SHEET No.	STATION	LOCATION	EA
L-1	NR 83+39	Lt Shld	1
TOTAL			1

VEGETATION CONTROL (MINOR CONCRETE)

SHEET No.	STATION	LOCATION	SQYD
L-1, X-1, X-2	NR 83+27 TO 89+08	Lt Shld	210
TOTAL			210

ROCK SLOPE PROTECTION FABRIC (CLASS 8)

SHEET No.	STATION	LOCATION	SQYD
L-1	NR 84+10 TO 88+10	Ret WALL	360
TOTAL			360

MIDWEST GUARDRAIL SYSTEM (WOOD POST)

SHEET No.	STATION	LOCATION	EA
L-1	NR 83+39 TO 88+45	Lt Shld	512
TOTAL			512

REMOVE CHAIN LINK FENCE

SHEET No.	STATION	LOCATION	LF
L-1	BE 8+43 TO 9+94	Rt SIDE	152
TOTAL			152

CHAIN LINK FENCE (TYPE CL-6)

SHEET No.	STATION	LOCATION	LF
L-1	BE 8+43 TO 9+94	Rt SIDE	152
TOTAL			152

SUMMARY OF QUANTITIES

Q-1

STATE OF CALIFORNIA - DEPARTMENT OF TRANSPORTATION
Caltrans DESIGN
FUNCTIONAL SUPERVISOR: ALBERT ZEPEDA
CALCULATED-DESIGNED BY: PAUL SNYDER
CHECKED BY: JIIN-TIAN TENG
REVISED BY: PS
DATE REVISED: 2/14/14

LAST REVISION 02-20-14
DATE PLOTTED => 24-JUN-2015
TIME PLOTTED => 13:53

Dist	COUNTY	ROUTE	POST MILES TOTAL PROJECT	SHEET No.	TOTAL SHEETS
04	Ala	580	R33.4	30	91

Paul Snyder 3/24/14
REGISTERED CIVIL ENGINEER DATE

6-22-15
PLANS APPROVAL DATE

REGISTERED PROFESSIONAL ENGINEER Paul Alan Snyder No. 41128 Exp. 3-31-17 CIVIL STATE OF CALIFORNIA

THE STATE OF CALIFORNIA OR ITS OFFICERS OR AGENTS SHALL NOT BE RESPONSIBLE FOR THE ACCURACY OR COMPLETENESS OF SCANNED COPIES OF THIS PLAN SHEET.

ROADWAY QUANTITIES SUMMARY

SHEET No.	STATION	LOCATION	HOT MIX ASPHALT (TYPE A)	CLASS 2 AGGREGATE BASE	PLACE HOT MIX ASPHALT (Misc AREA)	REMARKS
			TON	CY	SQYD	
L-1, X-1, X-4, SC-1	NR 83+17 TO 83+69	CENTER ISLAND	37.6	8.5		PAVE Exist ISLAND
L-1, X-1, X-2, X-3	NR 83+27 TO 84+75	BOTH LANES	65.3			RESURFACE Exist Pvmt
L1, X-2	NR 84+75 TO 88+20	Rt LANE	113.2			RESURFACE Exist Pvmt
L1, X-3	NR 88+20 TO 89+50	BOTH LANES	61.8			RESURFACE Exist Pvmt
L-1, SC-2	NR 83+39 TO 84+06	Lt Shld	13.6	5.7		NEW Shld
L-1, X-1, X-2	NR 83+51 TO 85+25	Rt Shld	44.2	9.8		NEW Shld
L-1, SC-2	NR 84+06 TO 88+20	Lt LANE & Shld	296.1	97.7		AT NEW Ret WALL
L-1, X-2, X-3	NR 85+25 TO 92+00	Rt Shld	352.4	80.0		NEW Shld
	NR 85+25 TO 86+10	Rt Shld	50.9	11.6		REPLACE MVP
L-1, SC-2	NR 88+20 TO 92+02	Lt Shld	99.7	22.6		NEW Shld
L-1, X-3	NR 88+40 TO 91+50	Rt Shld	10.1	31.0		NEW SIDE GUTTER
L-1	NR 90+90 TO 92+02	Lt Shld		29.6		UNDER CONTRASTING SURFACE TREATMENT
L-1, C-2	NR 92+02 TO 92+20	Lt Shld	10.0		30.8	EXIT NOSE TRANSITION
L-1, X-1, X-2, X-3	NR 83+00 TO 91+50	Rt Shld	11.0	35.4		UNDER TYPE E DIKE
L-1, X-3	NR 88+20 TO 92+02	Lt Shld	2.1	12.4		Shld BACKING
L-1, X-1, X-2, X-3, C-2	NR 83+60 TO 92+02	BOTH Shlds	13.7			HMA DIKE
SC-1	NR 83+60 TO 85+25	Rt Shld	6.5		30.0	FILL Exist GUTTER
	NR 86+10 TO 89+40	Rt Shld	16.0		73.3	FILL Exist GUTTER
TOTAL			1204.2	344.3	134.1	

MINOR CONCRETE

SHEET No.	STATION	LOCATION	CURB TYPE B2-6	CURB TYPE E	ISLAND PAVING	REMARKS
			LF		CY	
L-1, X-1, X-4	NR 83+28 TO 83+69	CENTER ISLAND	70		3	ISLAND
L-1, X-3	NR 90+90 TO 92+02	GORE SURFACING			20	CONTRASTING SURFACE TREATMENT
L-1, C-2	NR 91+50 TO 92+02	Rt Shld		53		SIDE GUTTER TO E-CURB TRANSITION
SUBTOTAL			70	53	23	
TOTAL			123		23	

TACK COAT

SHEET No.	STATION	DESCRIPTION	TON
L-1, X-1, X-2, X-3, X-4, C-2	NR 83+27 TO 92+20	APPLIED BETWEEN LAYERS OF HMA AND TO VERTICAL SURFACES	1
TOTAL			1

ALTERNATIVE IN-LINE TERMINAL SYSTEM

SHEET No.	STATION	LOCATION	EA
L-1	NR 88+45	Lt Shld	1
TOTAL			1

SUBGRADE ENHANCEMENT GEOTEXTILE (CLASS B1)

SHEET No.	STATION	LOCATION	SQYD
L-1, X-1, X-4, SC-1	NR 83+17 TO 83+69	CENTER ISLAND	60
L-1, SC-2	NR 83+39 TO 84+06	Lt Shld	30
L-1, X-1, X-2	NR 83+51 TO 85+25	Rt Shld	100
L-1, SC-2	NR 84+06 TO 88+20	Lt LANE & Shld	680
L-1, X-2, X-3	NR 85+25 TO 92+00	Rt Shld	700
	NR 85+25 TO 86+10	MVP ON Rt	100
L-1, SC-2	NR 88+20 TO 92+02	Lt Shld	230
L-1, X-3	NR 88+40 TO 91+50	Rt SIDE GUTTER	150
TOTAL			2050

REMOVE OVERSIDE DRAIN

SHEET No.	STATION	LOCATION	EA
L-1	NR 91+56	Lt Shld	1
TOTAL			1

TREATED WOOD WASTE

SHEET No.	STATION	DESCRIPTION	LB
L-1, Q-1	NR 83+39 TO 88+50	Exist MBGR POSTS	6700
SQ-1	NR 83+35 TO 87+60	Exist SIGN POSTS	300
TOTAL			7000

LIQUID ASPHALT (PRIME COAT)

SHEET No.	STATION	DESCRIPTION	TON
L-1, X-1, X-2, X-3, X-4	NR 83+39 TO 92+02	APPLIED TO AGGREGATE BASE UNDER HMA PAVING	1.6
TOTAL			1.6

SUMMARY OF QUANTITIES

Q-2

STATE OF CALIFORNIA - DEPARTMENT OF TRANSPORTATION
DESIGN
FUNCTIONAL SUPERVISOR: ALBERT ZEPEDA
CALCULATED-DESIGNED BY: PAUL SNYDER
CHECKED BY: JIIN-TIAN TENG
REVISED BY: PS
DATE REVISED: 2/14/14

LAST REVISION 03-10-14
DATE PLOTTED => 24-JUN-2015
TIME PLOTTED => 13:53

Dist	COUNTY	ROUTE	POST MILES TOTAL PROJECT	SHEET No.	TOTAL SHEETS
04	Ala	580	R33.4	31	91

LICENSED LANDSCAPE ARCHITECT

6-22-15

PLANS APPROVAL DATE

LICENSED LANDSCAPE ARCHITECT — Joaquin Pedrin — Signature — 8/30/2015 Renewal Date — 3/24/2014 Date — STATE OF CALIFORNIA

THE STATE OF CALIFORNIA OR ITS OFFICERS OR AGENTS SHALL NOT BE RESPONSIBLE FOR THE ACCURACY OR COMPLETENESS OF SCANNED COPIES OF THIS PLAN SHEET.

SPRINKLER SCHEDULE

SYMBOL	DESCRIPTION	SPRAY PATTERN	OPERATING PRESSURE (psi)	PRESSURE COMPENSATING	PLUS/MINUS 5% ② DISCHARGE: GALLONS PER MINUTE (GPM)	GALLONS PER HOUR (GPH)	RADIUS (ft)	WIDTH x LENGTH (ft)	FLOW SHUTOFF DEVICE	TYPE	SPRINKLER ASSEMBLY: RISER: MATERIAL: PLASTIC	GALVANIZED	SIZE (IPS INCH)	HEIGHT (INCH)	SWING JOINT (TYPE)	POP-UP: TYPE	INLET CONNECTION (NPT INCH)	HEIGHT (INCH)	SPRINLKER PROTECTOR (TYPE) ④	TREE WELL: HEIGHT (INCH)	SWING JOINT (TYPE)	REMARKS
○	FLOOD BUBBLER	-	40	X	0.25	-	-	-	-	V	X	-	½	-	-	-	-	-	-	-	-	⑥

X IN BOX DENOTES REQUIREMENT

APPLICABLE WHEN CIRCLED BELOW:

1 - SEE SPECIAL PROVISIONS.
2 - IF A PRESSURE COMPENSATING DEVICE IS SPECIFIED, THE DISCHARGE AND RADII SHOWN REFLECT ITS USE.
3 - VINYL-COATED CAST IRON HOUSING.
4 - SPRINKLER PROTECTORS REQUIRED ADJACENT TO SHOULDERS, CURBS, SIDEWALKS, AND DIKES.
5 - UNLESS OTHERWISE SHOWN ON PLANS.
⑥ - INSTALL ON UPHILL SIDE OF PLANT BASIN.

IRRIGATION SPRINKLER SCHEDULE
ISS-1

STATE OF CALIFORNIA - DEPARTMENT OF TRANSPORTATION
Caltrans® LANDSCAPE ARCHITECTURE

SENIOR LANDSCAPE ARCHITECT: LYDIA MAC
CALCULATED-DESIGNED BY: MICHAEL OGURO
CHECKED BY: JOAQUIN PEDRIN
REVISED BY: J.PEDRIN
DATE REVISED: 02-26-14

LAST REVISION 02-26-14
DATE PLOTTED => 24-JUN-2015
TIME PLOTTED => 13:53

Dist	COUNTY	ROUTE	POST MILES TOTAL PROJECT	SHEET No.	TOTAL SHEETS
04	Ala	580	R33.4	32	91

LICENSED LANDSCAPE ARCHITECT

6-22-15

PLANS APPROVAL DATE

LICENSED LANDSCAPE ARCHITECT — Joaquin Pedrin — Signature — 8/30/2015 Renewal Date — 3/24/2014 Date — STATE OF CALIFORNIA

THE STATE OF CALIFORNIA OR ITS OFFICERS OR AGENTS SHALL NOT BE RESPONSIBLE FOR THE ACCURACY OR COMPLETENESS OF SCANNED COPIES OF THIS PLAN SHEET.

NOTE:

FOR ACCURATE RIGHT OF WAY DATA, CONTACT RIGHT OF WAY ENGINEERING AT THE DISTRICT OFFICE.

IRRIGATION REMOVAL NOTES:

1. VERIFY LOCATION OF EXISTING IRRIGATION SYSTEM PRIOR TO REMOVAL.
2. EXISTING IRRIGATION SYSTEM IS OPERATED BY A 3-WIRE ENCODER/DECODER SYSTEM.

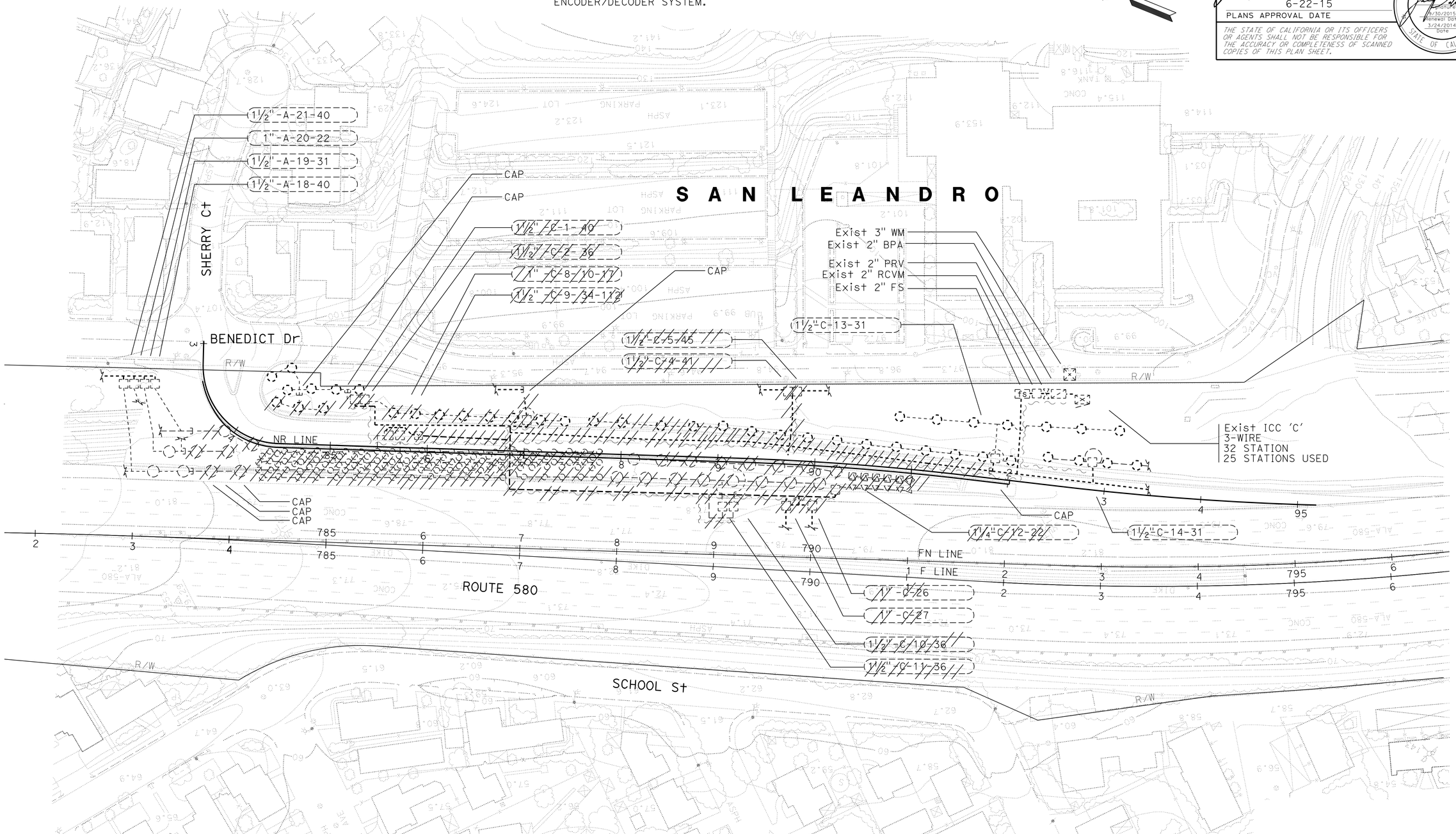

IRRIGATION REMOVAL PLAN

SCALE: 1" = 50'

APPROVED FOR IRRIGATION WORK ONLY

IR-1

REVISED BY	J.PEDRIN
DATE REVISED	02-26-14
CALCULATED-DESIGNED BY	MICHAEL OGURO
CHECKED BY	JOAQUIN PEDRIN
SENIOR LANDSCAPE ARCHITECT	LYDIA MAC

STATE OF CALIFORNIA - DEPARTMENT OF TRANSPORTATION

Caltrans® LANDSCAPE ARCHITECTURE

LAST REVISION 02-26-14 — DATE PLOTTED => 24-JUN-2015 — TIME PLOTTED => 13:53

Dist	COUNTY	ROUTE	POST MILES TOTAL PROJECT	SHEET No.	TOTAL SHEETS
04	Ala	580	R33.4	33	91

LICENSED LANDSCAPE ARCHITECT

6-22-15

PLANS APPROVAL DATE

LICENSED LANDSCAPE ARCHITECT — Joaquin Pedrin — Signature — 3/30/2015 Renewal Date — 3/24/2014 Date — STATE OF CALIFORNIA

THE STATE OF CALIFORNIA OR ITS OFFICERS OR AGENTS SHALL NOT BE RESPONSIBLE FOR THE ACCURACY OR COMPLETENESS OF SCANNED COPIES OF THIS PLAN SHEET.

NOTE:

FOR ACCURATE RIGHT OF WAY DATA, CONTACT RIGHT OF WAY ENGINEERING AT THE DISTRICT OFFICE.

IRRIGATION NOTES:

1. IRRIGATION SUPPLY LINE (LATERAL) MUST BE ¾" SCH 40 PVC PLASTIC PIPE SUPPLY LINE, UNLESS OTHER WISE NOTED.
2. IRRIGATION SUPPLY LINE (MAIN) MUST BE 3" SCH 40 PVC PLASTIC PIPE SUPPLY LINE, UNLESS OTHERWISE NOTED.
3. MAINTAIN EXISTING 6" UNDERDRAIN PIPE.

LEGEND:

3W — Exist 3-WIRE CONTROL AND NEUTRAL CONDUCTOR

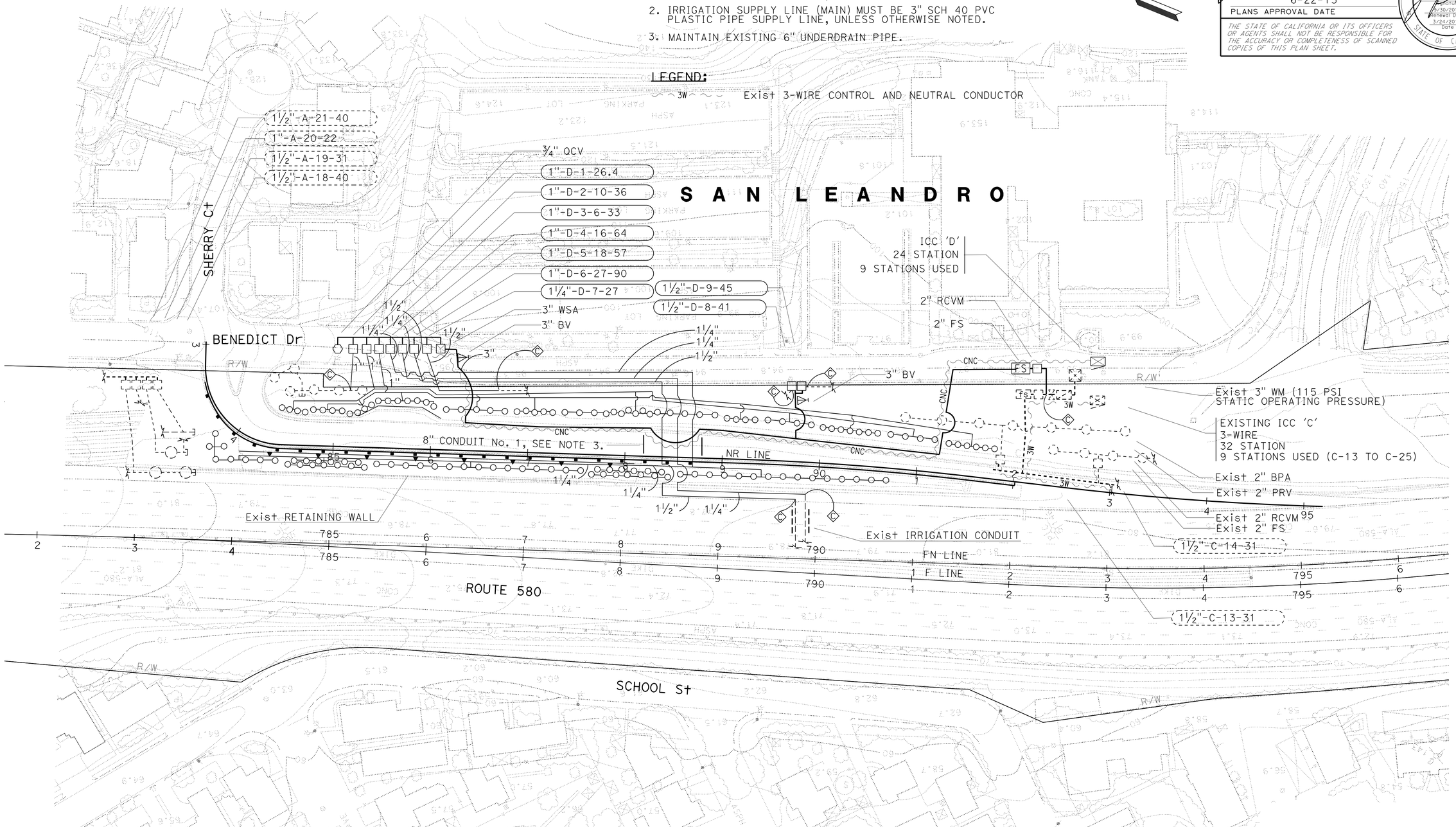

IRRIGATION PLAN

SCALE: 1" = 50'

IP-1

APPROVED FOR IRRIGATION WORK ONLY

STATE OF CALIFORNIA - DEPARTMENT OF TRANSPORTATION

Caltrans® LANDSCAPE ARCHITECTURE

SENIOR LANDSCAPE ARCHITECT: LYDIA MAC

CALCULATED-DESIGNED BY: MICHAEL OGURO — CHECKED BY: JOAQUIN PEDRIN

REVISED BY: J.PEDRIN — DATE REVISED: 02-26-14

LAST REVISION 02-26-14 — DATE PLOTTED => 24-JUN-2015 — TIME PLOTTED => 13:53

Dist	COUNTY	ROUTE	POST MILES TOTAL PROJECT	SHEET No.	TOTAL SHEETS
04	Ala	580	R33.4	34	91

LICENSED LANDSCAPE ARCHITECT

6-22-15

PLANS APPROVAL DATE

LICENSED LANDSCAPE ARCHITECT
Joaquin Pedrin
Signature
6/30/2015
Renewal Date
3/24/2014
Date
STATE OF CALIFORNIA

THE STATE OF CALIFORNIA OR ITS OFFICERS OR AGENTS SHALL NOT BE RESPONSIBLE FOR THE ACCURACY OR COMPLETENESS OF SCANNED COPIES OF THIS PLAN SHEET.

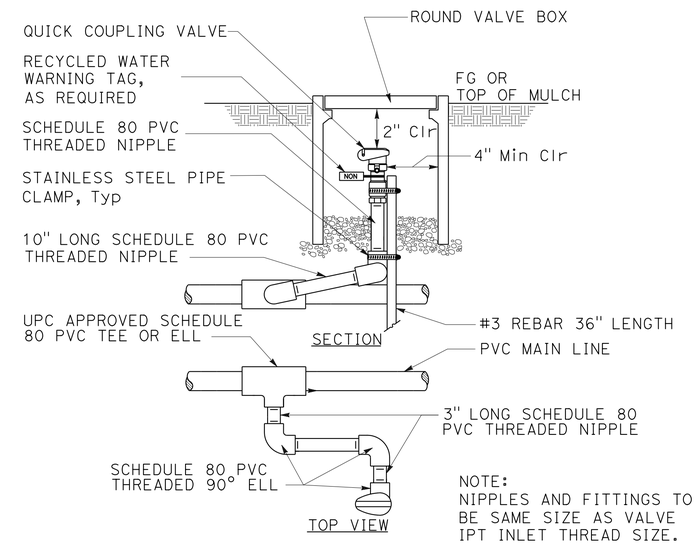

QUICK COUPLING VALVE

IRRIGATION DETAILS

ID-1

STATE OF CALIFORNIA - DEPARTMENT OF TRANSPORTATION
Caltrans® LANDSCAPE ARCHITECTURE

SENIOR LANDSCAPE ARCHITECT: LYDIA MAC
CALCULATED-DESIGNED BY: MICHAEL OGURO
CHECKED BY: JOAQUIN PEDRIN
REVISED BY: J.PEDRIN
DATE REVISED: 02-26-14

LAST REVISION 02-26-14
DATE PLOTTED => 24-JUN-2015
TIME PLOTTED => 13:53

Dist	COUNTY	ROUTE	POST MILES TOTAL PROJECT	SHEET No.	TOTAL SHEETS
04	Ala	580	R33.4	35	91

LICENSED LANDSCAPE ARCHITECT

6-22-15
PLANS APPROVAL DATE

LICENSED LANDSCAPE ARCHITECT
Renewal Date
Signature
6/30/2015
Renewal Date
3/24/2014
Date
STATE OF CALIFORNIA

THE STATE OF CALIFORNIA OR ITS OFFICERS OR AGENTS SHALL NOT BE RESPONSIBLE FOR THE ACCURACY OR COMPLETENESS OF SCANNED COPIES OF THIS PLAN SHEET.

SUBTOTALS PER VALVE ON LATERAL SUPPLY SIDE OF CONTROL VALVE

DESCRIPTION		UNIT	VALVE OR ASSEMBLY NUMBER D-1	D-2	D-3	D-4	D-5	D-6	D-7	SUBTOTALS	UNIT	DESCRIPTION	
PLASTIC PIPE SUPPLY LINE SCHEDULE 40	¾ INCH	LF	-	1,020	950	830	-	-	-	2,800	LF	¾ INCH	PLASTIC PIPE SUPPLY LINE SCHEDULE 40
	1 INCH	LF	40	40	40	-	-	-	-	120	LF	1 INCH	
	1¼" INCH	LF	-	-	-	615	550	-	-	1,165	LF	1¼" INCH	
	1½" INCH	LF	-	-	-	-	-	550	130	680	LF	1½" INCH	
GSP													GSP
DIP													DIP
SPRINKLER ASSEMBLY TYPE	RISER V	EA	-	36	33	64	-	-	-	133	EA	RISER V	SPRINKLER ASSEMBLY TYPE

IRRIGATION CONDUIT

SHEET No.	IRRIGATION CONDUIT No.	LOCATION LINE	LOCATION STATION	SIDE L†	SIDE R†	EXTENSION CONNECTION TYPE CB	EXTENSION CONNECTION TYPE OL	(N) WATER SUPPLY LINE SIZE (INCH)	(N) ELECTRICAL CONDUIT SIZE (INCH)	ABS COMPOSITE PIPE XX"	ABS COMPOSITE PIPE XX"	ABS COMPOSITE PIPE XX"	CORRUGATED STEEL PIPE XX"	CORRUGATED STEEL PIPE XX"	CORRUGATED STEEL PIPE XX"	CORRUGATED HIGH DENSITY POLYETHYLENE PIPE 8"	CORRUGATED HIGH DENSITY POLYETHYLENE PIPE XX"	CORRUGATED HIGH DENSITY POLYETHYLENE PIPE XX"	WELDED STEEL PIPE XX"	WELDED STEEL PIPE XX"	WELDED STEEL PIPE XX"	(N) SCHEDULE 40 PVC PIPE XX"	(N) SCHEDULE 40 PVC PIPE XX"	(N) SCHEDULE 40 PVC PIPE XX"
										CONDUIT SIZE (INCH)														
										LENGTH (LF)														
IP-1	1	NR	88+33	X	X	-	-	(2X) 1¼" 1½"	-	-	-	-	-	-	-	40	-	-	-	-	-	-	-	-
									SUBTOTAL															
									TOTAL							40								

(N) - NOT A SEPARATE PAY ITEM, FOR INFORMATION ONLY
X - DENOTES REQUIREMENT

ABBREVIATIONS:
CB - COUPLING BAND
OL - OVERLAP

IRRIGATION QUANTITIES

IQ-1

STATE OF CALIFORNIA - DEPARTMENT OF TRANSPORTATION
Caltrans® LANDSCAPE ARCHITECTURE
SENIOR LANDSCAPE ARCHITECT: LYDIA MAC
CALCULATED-DESIGNED BY: MICHAEL OGURO
CHECKED BY: JOAQUIN PEDRIN
REVISED BY: J.PEDRIN
DATE REVISED: 02-26-14

LAST REVISION 02-26-14
DATE PLOTTED => 24-JUN-2015
TIME PLOTTED => 13:54

Dist	COUNTY	ROUTE	POST MILES TOTAL PROJECT	SHEET No.	TOTAL SHEETS
04	Ala	580	R33.4	36	91

LICENSED LANDSCAPE ARCHITECT

6-22-15

PLANS APPROVAL DATE

LICENSED LANDSCAPE ARCHITECT — Joaquin Pedrin — Signature — 8/30/2015 Renewal Date — 3/24/2014 Date — STATE OF CALIFORNIA

THE STATE OF CALIFORNIA OR ITS OFFICERS OR AGENTS SHALL NOT BE RESPONSIBLE FOR THE ACCURACY OR COMPLETENESS OF SCANNED COPIES OF THIS PLAN SHEET.

SUBTOTALS PER PLAN SHEET ON MAIN SUPPLY SIDE OF CONTROL VALVE

DESCRIPTION			UNIT	SHEET NUMBER IP-1	SUBTOTALS
BPA		ENCLOSURE			
BPA		BOOSTER PUMP			
IRRIGATION CONTROLLER		24 STATION	EA	1	
IRRIGATION CONTROLLER	CEC	SINGLE	EA	1	
IRRIGATION CONTROLLER	CEC	DOUBLE			
VALVES AND ASSEMBLIES	WSA	3 INCH	EA	1	
VALVES AND ASSEMBLIES	RCV	1 INCH	EA	6	
VALVES AND ASSEMBLIES	RCV	1¼ INCH	EA	1	
VALVES AND ASSEMBLIES	RCV	1½ INCH	EA	2	
VALVES AND ASSEMBLIES	BV	3 INCH	EA	2	
VALVES AND ASSEMBLIES	FS	2 INCH	EA	1	
VALVES AND ASSEMBLIES	QCV	¾ INCH	EA	1	
VALVES AND ASSEMBLIES	RCVM	2 INCH	EA	1	
CONDUIT	CHDP	8 INCH	LF	40	40
PLASTIC PIPE SUPPLY LINE	WSP SCHEDULE 40	¾ INCH	LF	-	-
PLASTIC PIPE SUPPLY LINE	WSP SCHEDULE 40	1 INCH	LF	-	-
PLASTIC PIPE SUPPLY LINE	WSP SCHEDULE 40	1¼" INCH	LF	-	-
PLASTIC PIPE SUPPLY LINE	WSP SCHEDULE 40	1½" INCH	LF	-	-
PLASTIC PIPE SUPPLY LINE	CL 315	3 INCH	LF	734	734
	CP DIP GSP				

TOTAL QUANTITIES

TOTALS	UNIT	DESCRIPTION		
		ENCLOSURE		BPA
		BOOSTER PUMP		BPA
1	EA	24 STATION		IRRIGATION CONTROLLER
1	EA	SINGLE	CEC	IRRIGATION CONTROLLER
		DOUBLE	CEC	IRRIGATION CONTROLLER
1	EA	3 INCH	WSA	VALVES AND ASSEMBLIES
6	EA	1 INCH	RCV	VALVES AND ASSEMBLIES
1	EA	1¼ INCH	RCV	VALVES AND ASSEMBLIES
2	EA	1½ INCH	RCV	VALVES AND ASSEMBLIES
2	EA	3 INCH	BV	VALVES AND ASSEMBLIES
1	EA	2 INCH	FS	VALVES AND ASSEMBLIES
1	EA	¾ INCH	QCV	VALVES AND ASSEMBLIES
1	EA	2 INCH	RCVM	VALVES AND ASSEMBLIES
40	LF	8 INCH	CHDP	CONDUIT
2,800	LF	¾ INCH	WSP SCHEDULE 40	PLASTIC PIPE SUPPLY LINE
120	LF	1 INCH	WSP SCHEDULE 40	PLASTIC PIPE SUPPLY LINE
1,165	LF	1¼" INCH	WSP SCHEDULE 40	PLASTIC PIPE SUPPLY LINE
680	LF	1½" INCH	WSP SCHEDULE 40	PLASTIC PIPE SUPPLY LINE
734	LF	3 INCH	CL 315	PLASTIC PIPE SUPPLY LINE
			GSP	
			DIP	
			CP	
133	EA	RISER V		SPRINKLER ASSEMBLY TYPE

IRRIGATION QUANTITIES

IQ-2

STATE OF CALIFORNIA - DEPARTMENT OF TRANSPORTATION

Caltrans® LANDSCAPE ARCHITECTURE

SENIOR LANDSCAPE ARCHITECT: LYDIA MAC

CALCULATED-DESIGNED BY: MICHAEL OGURO

CHECKED BY: JOAQUIN PEDRIN

REVISED BY: J.PEDRIN

DATE REVISED: 02-26-14

LAST REVISION: 02-26-14

DATE PLOTTED => 24-JUN-2015

TIME PLOTTED => 13:54

Dist	COUNTY	ROUTE	POST MILES TOTAL PROJECT	SHEET No.	TOTAL SHEETS
04	Ala	580	R33.4	37	91

LICENSED LANDSCAPE ARCHITECT

6-22-15

PLANS APPROVAL DATE

LICENSED LANDSCAPE ARCHITECT — Joaquin Pedrin — Signature — 8/30/2015 Renewal Date — 3/24/2014 Date — STATE OF CALIFORNIA

THE STATE OF CALIFORNIA OR ITS OFFICERS OR AGENTS SHALL NOT BE RESPONSIBLE FOR THE ACCURACY OR COMPLETENESS OF SCANNED COPIES OF THIS PLAN SHEET.

PLANTING LEGEND

PLANT GROUP	PLANT No.	SYMBOL	BOTANICAL NAME	COMMON NAME	SIZE	QUANTITY EACH	HOLE SIZE (INCH) Dia	HOLE SIZE (INCH) DEPTH	BASIN TYPE	SOIL AMENDMENT ① TYPE	SOIL AMENDMENT ① RATE	IRON SULFATE ① RATE	COMMERCIAL FERTILIZER ① PLANTING	COMMERCIAL FERTILIZER ① PLT ESTB	BASIN MULCH ② TYPE	BASIN MULCH ② CY	STAKING	PLANTING LIMITS MINIMUM DISTANCE (ft) FROM ETW	Pvmt	FENCE	WALL	PAVED DITCH	EARTH DITCH	ON CENTER (ft)	REMARKS
A	1	◉	ABELIA X GRANDIFLORA	GLOSSY ABELIA	1 GAL	42	18"	24"	II	CMP	0.04 CY	-	2 PKT	3 oz	TB	0.06	-	-	8	6	6	6	8	8	SHRUB
	2	△	ESCALLONIA RUBRA	RED ESCALLONIA	1 GAL	58	18"	24"	II	CMP	0.04 CY	-	2 PKT	3 oz	TB	0.06	-	-	10	8	8	8	10	15	SHRUB
	3	◈	RHAPHIOLEPIS 'MAJESTIC BEAUTY'	NO COMMON NAME	1 GAL	33	18"	24"	II	CMP	0.04 CY	-	2 PKT	3 oz	TB	0.06	-	-	12	10	10	12	10	10	SHRUB

APPLICABLE WHEN CIRCLED:

1 - QUANTITIES SHOWN ARE "PER PLANT" UNLESS SHOWN AS SQFT OR SQYD APPLICATION RATES
2 - BASIN MULCH IN MULCH AREAS IS INCLUDED WITH MULCH QUANTITIES SHOWN ON PLANTING PLAN
3 - SUFFICIENT TO RECEIVE ROOT BALL AND AMENDMENTS IF REQUIRED
4 - SEE DETAIL
5 - SEE SPECIAL PROVISIONS
6 - SEE STANDARD SPECIFICATIONS
7 - AS SHOWN ON PLANS
8 - UNLESS OTHERWISE SHOWN ON PLANS
9 - FOLIAGE PROTECTOR REQUIRED
10 - ROOT PROTECTOR REQUIRED
11 - ROOT BARRIER REQUIRED
12 - DEPARTMENT-FURNISHED

ABBREVIATIONS

CMP - COMPOST
TB - TREE BARK

NOTE:

UNDERLINED PORTIONS OF BOTANICAL NAME INDICATE ABBREVIATIONS USED ON PLANTING PLANS.

PLANT LIST

PL-1

STATE OF CALIFORNIA - DEPARTMENT OF TRANSPORTATION
Caltrans® LANDSCAPE ARCHITECTURE

SENIOR LANDSCAPE ARCHITECT: LYDIA MAC
CALCULATED-DESIGNED BY: MICHAEL OGURO
CHECKED BY: JOAQUIN PEDRIN
REVISED BY: J.PEDRIN
DATE REVISED: 02-26-14

LAST REVISION 02-26-14
DATE PLOTTED => 24-JUN-2015
TIME PLOTTED => 13:54

Dist	COUNTY	ROUTE	POST MILES TOTAL PROJECT	SHEET No.	TOTAL SHEETS
04	Ala	580	R33.4	38	91

LICENSED LANDSCAPE ARCHITECT

6-22-15

PLANS APPROVAL DATE

LICENSED LANDSCAPE ARCHITECT — Joaquin Pedrin — Signature — 8/30/2015 Renewal Date — 3/24/2014 Date — STATE OF CALIFORNIA

THE STATE OF CALIFORNIA OR ITS OFFICERS OR AGENTS SHALL NOT BE RESPONSIBLE FOR THE ACCURACY OR COMPLETENESS OF SCANNED COPIES OF THIS PLAN SHEET.

NOTE:

FOR ACCURATE RIGHT OF WAY DATA, CONTACT RIGHT OF WAY ENGINEERING AT THE DISTRICT OFFICE.

LEGEND:

- MAINTAIN EXISTING PLANTED AREA TO REMAIN
- LIMIT OF SPREAD MULCH AREA (Min 3" Depth)

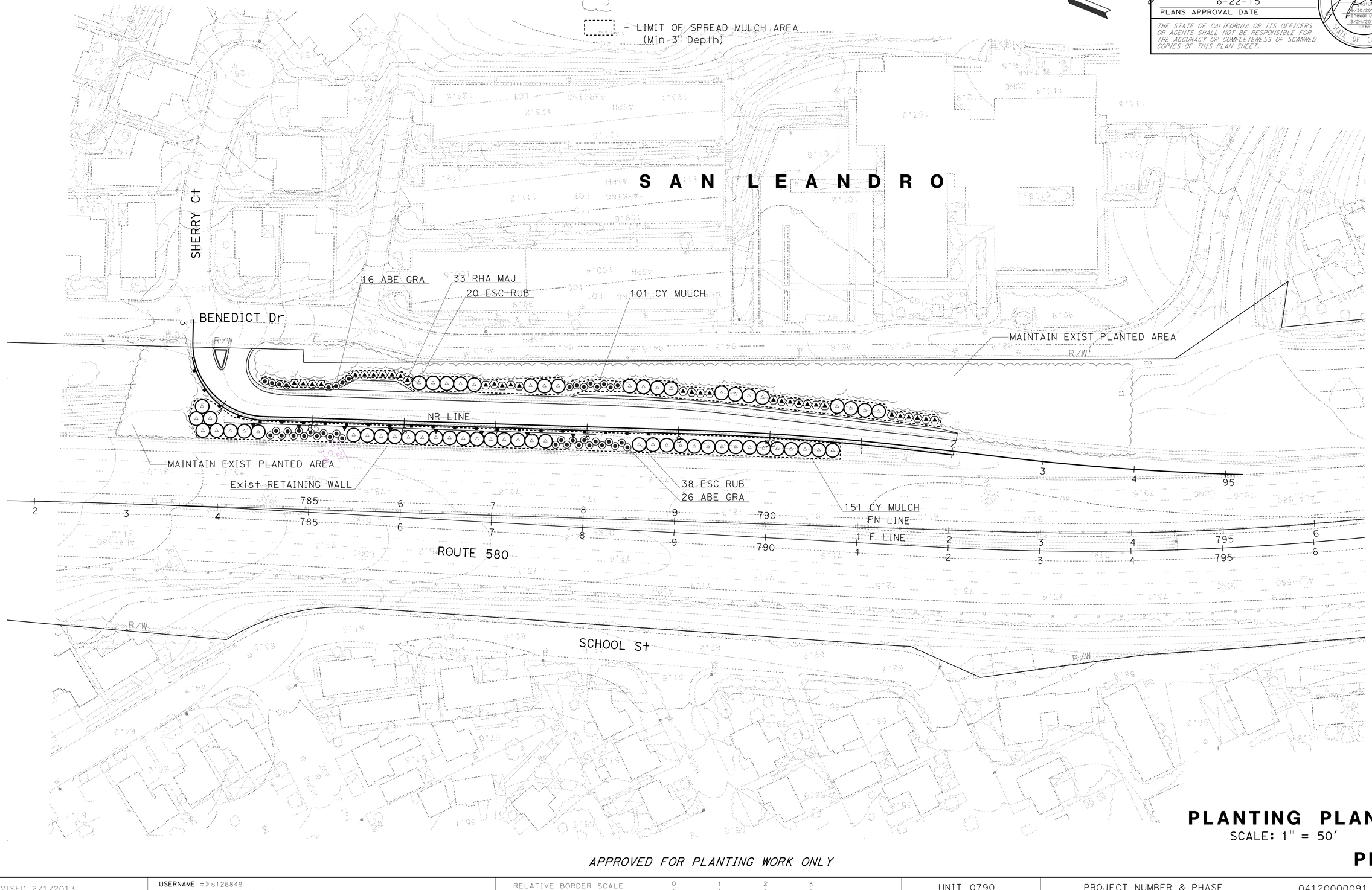

PLANTING PLAN

SCALE: 1" = 50'

APPROVED FOR PLANTING WORK ONLY

PP-1

STATE OF CALIFORNIA - DEPARTMENT OF TRANSPORTATION

Caltrans® LANDSCAPE ARCHITECTURE

SENIOR LANDSCAPE ARCHITECT: LYDIA MAC

CALCULATED-DESIGNED BY: MICHAEL OGURO

CHECKED BY: JOAQUIN PEDRIN

REVISED BY: J.PEDRIN

DATE REVISED: 02-26-14

LAST REVISION 02-26-14

DATE PLOTTED => 24-JUN-2015

TIME PLOTTED => 13:54

Dist	COUNTY	ROUTE	POST MILES TOTAL PROJECT	SHEET No.	TOTAL SHEETS
04	Ala	580	R33.4	39	91

LICENSED LANDSCAPE ARCHITECT

6-22-15

PLANS APPROVAL DATE

LICENSED LANDSCAPE ARCHITECT
Joaquin Pedrin
Signature
8/30/2015
Renewal Date
3/24/2014
Date
STATE OF CALIFORNIA

THE STATE OF CALIFORNIA OR ITS OFFICERS OR AGENTS SHALL NOT BE RESPONSIBLE FOR THE ACCURACY OR COMPLETENESS OF SCANNED COPIES OF THIS PLAN SHEET.

WOOD MULCH

TYPE	LOCATION		QUANTITY (CY)
	BASIN	SPREAD	
TREE BARK	-	252	252
WOOD CHIP	-	-	-
SHREDDED BARK	-	-	-
TREE TRIMMING	-	-	-
		TOTAL	252

SOIL AMENDMENT

TYPE	QUANTITY (CY)
COMPOST	5.4
TOTAL	5.4

PACKET FERTILIZER

TYPE	QUANTITY (EA)
PACKET	266
TOTAL	266

LANDSCAPE QUANTITIES

LQ-1

STATE OF CALIFORNIA - DEPARTMENT OF TRANSPORTATION
Caltrans® LANDSCAPE ARCHITECTURE

SENIOR LANDSCAPE ARCHITECT: LYDIA MAC

CALCULATED-DESIGNED BY: MICHAEL OGURO
CHECKED BY: JOAQUIN PEDRIN

REVISED BY: J.PEDRIN
DATE REVISED: 02-26-14

LAST REVISION 02-26-14
DATE PLOTTED => 24-JUN-2015
TIME PLOTTED => 13:54

Dist	COUNTY	ROUTE	POST MILES TOTAL PROJECT	SHEET No.	TOTAL SHEETS
04	Ala	580	R33.4	40	91

LICENSED LANDSCAPE ARCHITECT

6-22-15
PLANS APPROVAL DATE

LICENSED LANDSCAPE ARCHITECT — SALLY BANG No. 5980 — Signature — Effective 11-30-15 — Renewal Date 3-24-14 — Date — STATE OF CALIFORNIA

THE STATE OF CALIFORNIA OR ITS OFFICERS OR AGENTS SHALL NOT BE RESPONSIBLE FOR THE ACCURACY OR COMPLETENESS OF SCANNED COPIES OF THIS PLAN SHEET.

NOTE:

FOR ACCURATE RIGHT OF WAY DATA, CONTACT
RIGHT OF WAY ENGINEERING AT THE DISTRICT OFFICE.

LEGEND:

FR — FIBER ROLL

S A N L E A N D R O

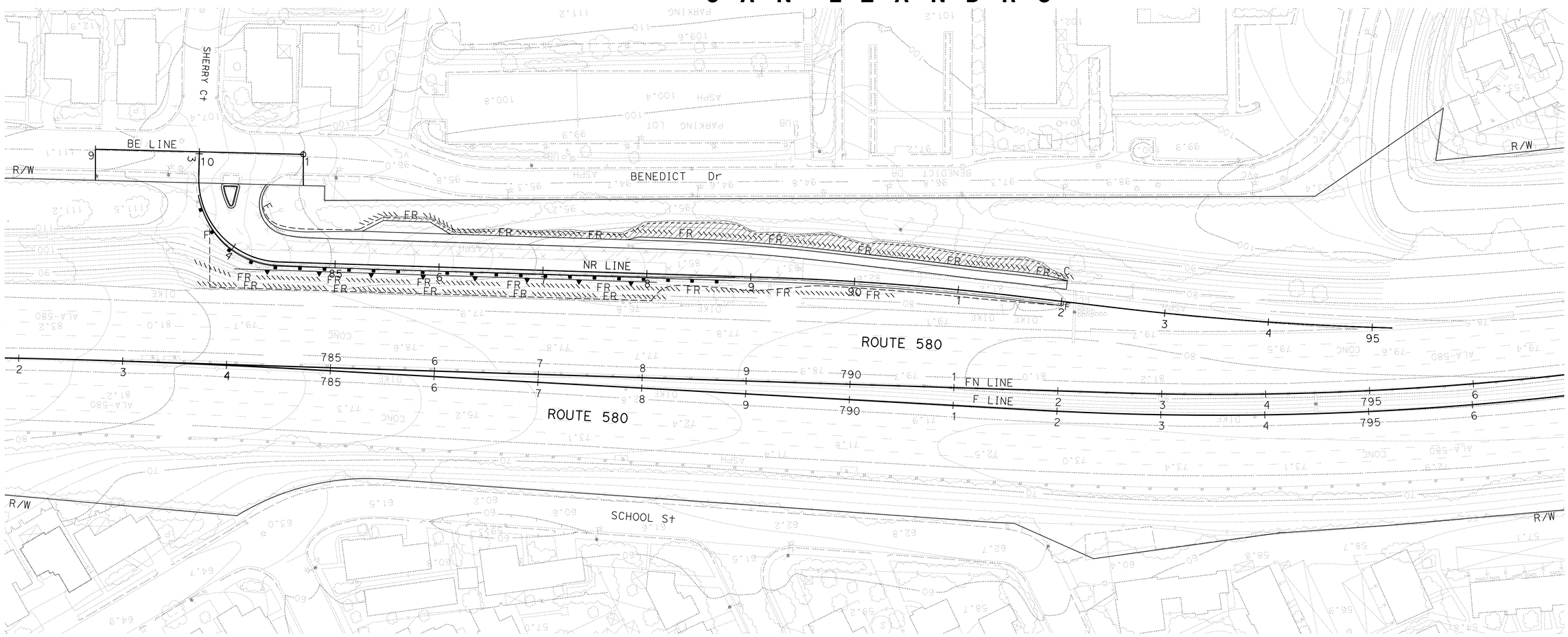

APPROVED FOR EROSION CONTROL WORK ONLY

EROSION CONTROL PLAN

SCALE: 1'' = 50'

EC-1

STATE OF CALIFORNIA - DEPARTMENT OF TRANSPORTATION	SALLY BANG	SB	1/21/14
Caltrans® WATER QUALITY	ANGELA KWAN		
	SENIOR LANDSCAPE ARCHITECT	REVISED BY	DATE REVISED
	DAVID YAM	CALCULATED-DESIGNED BY	CHECKED BY

LAST REVISION 01-21-14 — DATE PLOTTED => 24-JUN-2015 — TIME PLOTTED => 13:54

Dist	COUNTY	ROUTE	POST MILES TOTAL PROJECT	SHEET No.	TOTAL SHEETS
04	Ala	580	R33.4	41	91

LICENSED LANDSCAPE ARCHITECT

6-22-15
PLANS APPROVAL DATE

LICENSED LANDSCAPE ARCHITECT — SALLY BANG No. 3860 — Expiration Date 11-30-15 — Renewal Date 3-24-14 — Date — STATE OF CALIFORNIA

THE STATE OF CALIFORNIA OR ITS OFFICERS OR AGENTS SHALL NOT BE RESPONSIBLE FOR THE ACCURACY OR COMPLETENESS OF SCANNED COPIES OF THIS PLAN SHEET.

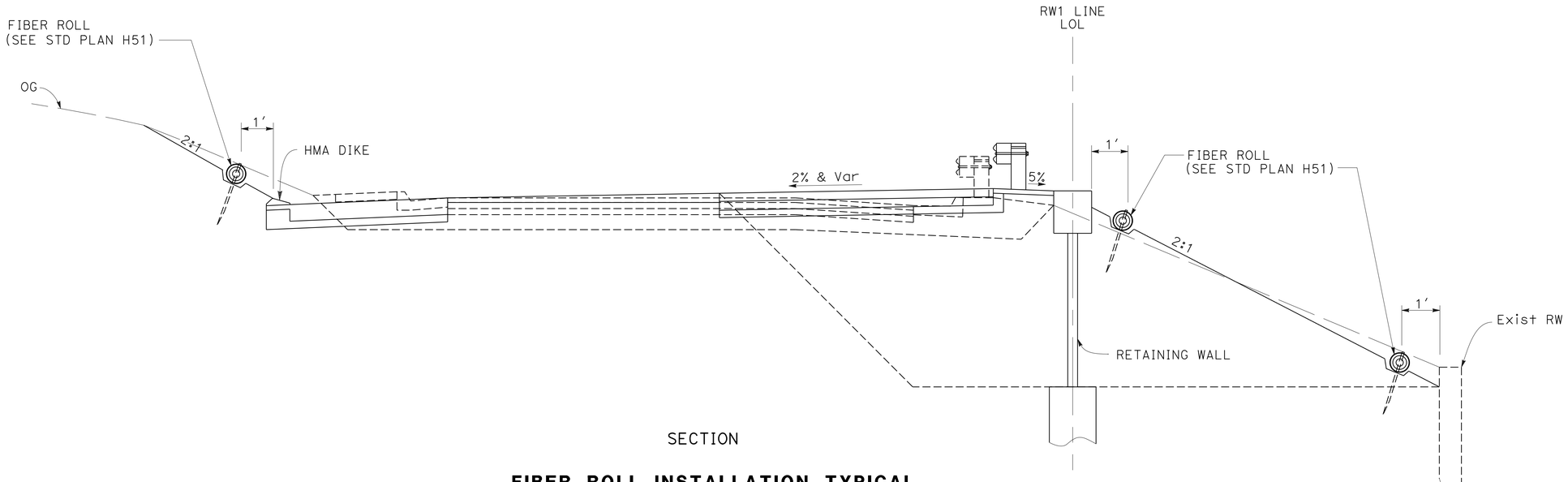

SECTION

FIBER ROLL INSTALLATION TYPICAL

EROSION CONTROL QUANTITIES

SHEET	FIBER ROLLS LF
EC-1	1810
TOTAL	1810

FIBER ROLLS

SEQUENCE	ITEM	TYPE	REMARKS
INSTALL FIBER ROLLS BEFORE MULCH APPLICATION.	FIBER ROLLS	TYPE B 8" TO 10" DIA	TYPE 1 FIBER ROLL INSTALLATION

EROSION CONTROL DETAIL AND QUANTITIES

NO SCALE

ECD-1

STATE OF CALIFORNIA - DEPARTMENT OF TRANSPORTATION
Caltrans®
WATER QUALITY

SENIOR LANDSCAPE ARCHITECT: DAVID YAM
CALCULATED-DESIGNED BY: SALLY BANG
CHECKED BY: ANGELA KWAN
REVISED BY: SB
DATE REVISED: 1/21/14

LAST REVISION 01-21-14
DATE PLOTTED => 24-JUN-2015
TIME PLOTTED => 13:54

Dist	COUNTY	ROUTE	POST MILES TOTAL PROJECT	SHEET No.	TOTAL SHEETS
04	Ala	580	R33.4	42	91

REGISTERED ELECTRICAL ENGINEER 3/24/14 DATE

PLANS APPROVAL DATE 6-22-15

REGISTERED PROFESSIONAL ENGINEER Mahmood Noii No. 13717 Exp. 6-30-17 ELECTRICAL STATE OF CALIFORNIA

THE STATE OF CALIFORNIA OR ITS OFFICERS OR AGENTS SHALL NOT BE RESPONSIBLE FOR THE ACCURACY OR COMPLETENESS OF SCANNED COPIES OF THIS PLAN SHEET.

NOTE:

FOR ACCURATE RIGHT OF WAY DATA, CONTACT RIGHT OF WAY ENGINEERING AT THE DISTRICT OFFICE.

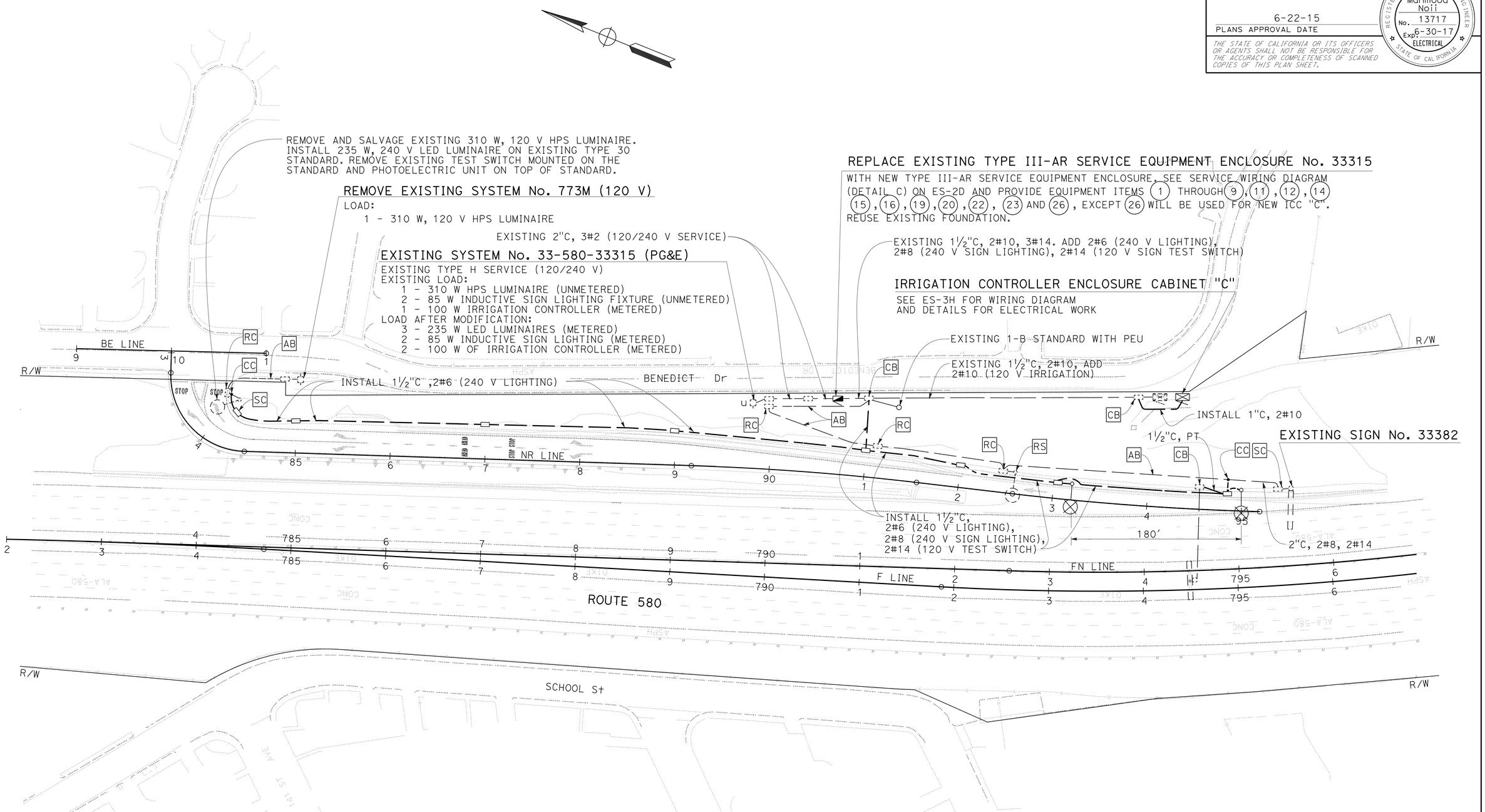

MODIFY LIGHTING AND SIGN ILLUMINATION

SCALE: 1" = 50'

APPROVED FOR ELECTRICAL WORK ONLY

E-1

STATE OF CALIFORNIA - DEPARTMENT OF TRANSPORTATION

Caltrans

ELECTRICAL

FUNCTIONAL SUPERVISOR: BEHZAD GOLEMOHAMMADI

CALCULATED-DESIGNED BY: GUILLERMO F. BAUTISTA

CHECKED BY: MAHMOOD NOII

REVISED BY: GB

DATE REVISED: 12/20/13

LAST REVISION 03-19-14

DATE PLOTTED => 24-JUN-2015

TIME PLOTTED => 13:54

Dist	COUNTY	ROUTE	POST MILES TOTAL PROJECT	SHEET No.	TOTAL SHEETS
04	Ala	580	R33.4	43	91

REGISTERED ELECTRICAL ENGINEER 3/24/14 DATE

6-22-15
PLANS APPROVAL DATE

REGISTERED PROFESSIONAL ENGINEER Mahmood Noii No. 13717 Exp. 6-30-17 ELECTRICAL STATE OF CALIFORNIA

THE STATE OF CALIFORNIA OR ITS OFFICERS OR AGENTS SHALL NOT BE RESPONSIBLE FOR THE ACCURACY OR COMPLETENESS OF SCANNED COPIES OF THIS PLAN SHEET.

MODIFY LIGHTING AND SIGN ILLUMINATION

SHEET No.	235 W LED LUMINAIRE	TYPE III-AR SERVICE ENCLOSURE	No. 5 PB	TYPE 30 STANDARD	1½"C TYPE 3	No. 6 CONDUCTORS	No. 8 CONDUCTORS	No. 10 CONDUCTORS	No. 14 CONDUCTORS	FUSED SPLICE CONNECTOR
	EA				LF					EA
E-1	3	1	8	2	1150	2280	860	580	1060	3

ITEMS SHOWN IN THIS TABLE ARE NOT A SEPARATE PAY ITEM, FOR INFORMATION OMLY.

ELECTRICAL QUANTITIES

E-2

STATE OF CALIFORNIA - DEPARTMENT OF TRANSPORTATION
Caltrans
ELECTRICAL

FUNCTIONAL SUPERVISOR: BEHZAD GOLEMOHAMMADI
CALCULATED-DESIGNED BY / CHECKED BY: MAHMOOD NOII
REVISED BY: GB
DATE REVISED: 12/20/13

LAST REVISION 03-24-14
DATE PLOTTED => 24-JUN-2015
TIME PLOTTED => 13:54

M

Maint	MAINTENANCE
Max	MAXIMUM
MB	METAL BEAM
MBB	METAL BEAM BARRIER
MBGR	METAL BEAM GUARD RAILING
Med	MEDIAN
MGS	MIDWEST GUARDRAIL SYSTEM
MH	MANHOLE
Min	MINIMUM
Misc	MISCELLANEOUS
Misc I & S	MISCELLANEOUS IRON AND STEEL
Mkr	MARKER
Mod	MODIFIED,
	MODIFY
Mon	MONUMENT
MP	METAL PLATE
MPGR	METAL PLATE GUARD RAILING
MR	MOVEMENT RATING
MSE	MECHANICALLY STABILIZED EMBANKMENT
Mt	MOUNTAIN, MOUNT
Mtl	MATERIAL
MVP	MAINTENANCE VEHICLE PULLOUT

N

N	NORTH
NB	NORTHBOUND
No.	NUMBER (MUST HAVE PERIOD)
Nos.	NUMBERS (MUST HAVE PERIOD)
NPS	NOMINAL PIPE SIZE
NS	NEAR SIDE
NSP	NEW STANDARD PLAN
NTS	NOT TO SCALE

O

Oblr	OBLITERATE
OC	OVERCROSSING
OD	OUTSIDE DIAMETER
OF	OUTSIDE FACE
OG	ORIGINAL GROUND
OGAC	OPEN GRADED ASPHALT CONCRETE
OGFC	OPEN GRADED FRICTION COURSE
OH	OVERHEAD
OHWM	ORDINARY HIGH WATER MARK
O-O	OUT TO OUT
Opp	OPPOSITE
OSD	OVERSIDE DRAIN

P

P	PAGE
PAP	PERFORATED ALUMINUM PIPE
PB	PULL BOX
PC	POINT OF CURVATURE,
	PRECAST
PCC	POINT OF COMPOUND CURVE,
	PORTLAND CEMENT CONCRETE
PCMS	PORTABLE CHANGEABLE MESSAGE SIGN
PCP	PERFORATED CONCRETE PIPE,
	PRESTRESSED CONCRETE PIPE
PCVC	POINT OF COMPOUND VERTICAL CURVE
PEC	PERMIT TO ENTER AND CONSTRUCT
Ped	PEDESTRIAN
Ped OC	PEDESTRIAN OVERCROSSING
Ped UC	PEDESTRIAN UNDERCROSSING
Perm Mtl	PERMEABLE MATERIAL

P continued

PG	PROFILE GRADE
PI	POINT OF INTERSECTION
PJP	PARTIAL JOINT PENETRATION
Pkwy	PARKWAY
ℙ,PL	PLATE
P/L	PROPERTY LINE
PM	POST MILE,
	TIME FROM NOON TO MIDNIGHT
PN	PAVING NOTCH
POC	POINT OF HORIZONTAL CURVE
POT	POINT OF TANGENT
POVC	POINT OF VERTICAL CURVE
PP	PIPE PILE,
	PLASTIC PIPE,
	POWER POLE
PPL	PREFORMED PERMEABLE LINER
PPP	PERFORATED PLASTIC PIPE
PRC	POINT OF REVERSE CURVE
PRF	PAVEMENT REINFORCING FABRIC
PRVC	POINT OF REVERSE VERTICAL CURVE
PS&E	PLANS, SPECIFICATIONS AND ESTIMATES
PS, P/S	PRESTRESSED
PSP	PERFORATED STEEL PIPE
PT	POINT OF TANGENCY
PVC	POLYVINYL CHLORIDE
Pvmt	PAVEMENT

Q

Qty	QUANTITY

R

R	RADIUS
R & D	REMOVE AND DISPOSE
R & S	REMOVE AND SALVAGE
R/C	RATE OF CHANGE
RCA	REINFORCED CONCRETE ARCH
RCB	REINFORCED CONCRETE BOX
RCP	REINFORCED CONCRETE PIPE
RCPA	REINFORCED CONCRETE PIPE ARCH
Rd	ROAD
Reinf	REINFORCED,
	REINFORCEMENT,
	REINFORCING
Rel	RELOCATE
Repl	REPLACEMENT
Ret	RETAINING
Rev	REVISED, REVISION
Rdwy	ROADWAY
RHMA	RUBBERIZED HOT MIX ASPHALT
Riv	RIVER
RM	ROAD-MIXED
RP	RADIUS POINT,
	REFERENCE POINT
RR	RAILROAD
RSP	ROCK SLOPE PROTECTION,
	REVISED STANDARD PLAN
Rt	RIGHT
Rte	ROUTE
RW	REDWOOD,
	RETAINING WALL
R/W	RIGHT OF WAY
Rwy	RAILWAY

S

S	SOUTH,
	SUPPLEMENT
SAE	STRUCTURE APPROACH EMBANKMENT
Salv	SALVAGE
SAPP	STRUCTURAL ALUMINUM PLATE PIPE
SB	SOUTHBOUND
SC	SAND CUSHION
SCSP	SLOTTED CORRUGATED STEEL PIPE
SD	STORM DRAIN
Sec	SECOND,
	SECTION
Sep	SEPARATION
SG	SUBGRADE
Shld	SHOULDER
Sht	SHEET
Sim	SIMILAR
℄	STATION LINE
SM	SELECTED MATERIAL
Spec	SPECIAL,
	SPECIFICATIONS
SPP	SLOTTED PLASTIC PIPE
SS	SLOPE STAKE
SSBM	STRAP AND SADDLE BRACKET METHOD
SSD	STRUCTURAL SECTION DRAIN
SSPA	STRUCTURAL STEEL PLATE ARCH
SSPP	STRUCTURAL STEEL PLATE PIPE
SSPPA	STRUCTURAL STEEL PLATE PIPE ARCH
SSRP	STEEL SPIRAL RIB PIPE
St	STREET
Sta	STATION
STBB	SINGLE THRIE BEAM BARRIER
Std	STANDARD
Str	STRUCTURE
Surf	SURFACING
SW	SIDEWALK,
	SOUND WALL
Swr	SEWER
Sym	SYMMETRICAL
S4S	SURFACE 4 SIDES

T

T	SEMI-TANGENT
Tan	TANGENT
TBB	THRIE BEAM BARRIER
Tbr	TIMBER
TC	TOP OF CURB
TCB	TRAFFIC CONTROL BOX
TCE	TEMPORARY CONSTRUCTION EASEMENT
Tel	TELEPHONE
Temp	TEMPORARY
TG	TOP OF GRADE
Tot	TOTAL
TP	TELEPHONE POLE
TPB	TREATED PERMEABLE BASE
TPM	TREATED PERMEABLE MATERIAL
Trans	TRANSITION

T continued

TS	TRANSVERSE,
	TRAFFIC SIGNAL,
	TUBULAR STEEL
Typ	TYPICAL

U

UC	UNDERCROSSING
UD	UNDERDRAIN
UG	UNDERGROUND
UON	UNLESS OTHERWISE NOTED
UP	UNDERPASS

V

V	VALVE,
	DESIGN SPEED
Var	VARIABLE,
	VARIES
VC	VERTICAL CURVE
VCP	VITRIFIED CLAY PIPE
Vert	VERTICAL
Via	VIADUCT
Vol	VOLUME

W

W	WEST,
	WIDTH
WB	WESTBOUND
WH	WEEP HOLE
WM	WIRE MESH
WS	WATER SURFACE
WSP	WELDED STEEL PIPE
Wt	WEIGHT
WV	WATER VALVE
WW	WINGWALL
WWLOL	WINGWALL LAYOUT LINE

X

X Sec	CROSS SECTION
Xing	CROSSING

Y

Yr	YEAR
Yrs	YEARS

Dist	COUNTY	ROUTE	POST MILES TOTAL PROJECT	SHEET No.	TOTAL SHEETS
04	Ala	580	R33.4	44	91

Grace M. Tsushima
REGISTERED CIVIL ENGINEER

July 19, 2013
PLANS APPROVAL DATE

REGISTERED PROFESSIONAL ENGINEER
Grace M. Tsushima
No. C49814
Exp. 9-30-14
CIVIL
STATE OF CALIFORNIA

THE STATE OF CALIFORNIA OR ITS OFFICERS OR AGENTS SHALL NOT BE RESPONSIBLE FOR THE ACCURACY OR COMPLETENESS OF SCANNED COPIES OF THIS PLAN SHEET.

TO ACCOMPANY PLANS DATED 6-22-15

UNIT OF MEASUREMENT SYMBOLS:

Some of the symbols used in the project plan quantity tables and in the Bid Item List are:

TABLE A

SYMBOL USED	DEFINITIONS
ACRE	ACRE
CF	CUBIC FOOT
CY	CUBIC YARD
EA	EACH
GAL	GALLON
LB	POUND
LF	LINEAR FOOT
SQFT	SQUARE FOOT
SQYD	SQUARE YARD
STA	100 FEET
TAB	TABLET
TON	2,000 POUNDS

Some of the symbols used in the plans other than in the project plan quantity tables are:

TABLE B

SYMBOL USED	DEFINITIONS
ksi	KIPS PER SQUARE INCH
ksf	KIPS PER SQUARE FOOT
psi	POUNDS PER SQUARE INCH
psf	POUNDS PER SQUARE FOOT
lb/ft^3, pcf	POUNDS PER CUBIC FOOT
tsf	TONS PER SQUARE FOOT
mph, MPH *	MILES PER HOUR
ø	NOMINAL DIAMETER
oz	OUNCE
lb	POUND
kip	1,000 POUNDS
cal	CALORIE
ft	FOOT OR FEET
gal	GALLON

* For use on a sign panel only

STATE OF CALIFORNIA
DEPARTMENT OF TRANSPORTATION

ABBREVIATIONS (SHEET 2 OF 2)

NO SCALE

RSP A10B DATED JULY 19, 2013 SUPERSEDES STANDARD PLAN A10B DATED MAY 20, 2011 - PAGE 2 OF THE STANDARD PLANS BOOK DATED 2010.

REVISED STANDARD PLAN RSP A10B

2010 REVISED STANDARD PLAN RSP A10B

6-7-13

Dist	COUNTY	ROUTE	POST MILES TOTAL PROJECT	SHEET No.	TOTAL SHEETS
04	Ala	580	R33.4	45	91

REGISTERED CIVIL ENGINEER

July 19, 2013
PLANS APPROVAL DATE

Roberta L. McLaughlin No. C40375 Exp. 3-31-15 CIVIL STATE OF CALIFORNIA REGISTERED PROFESSIONAL ENGINEER

THE STATE OF CALIFORNIA OR ITS OFFICERS OR AGENTS SHALL NOT BE RESPONSIBLE FOR THE ACCURACY OR COMPLETENESS OF SCANNED COPIES OF THIS PLAN SHEET.

TO ACCOMPANY PLANS DATED 6-22-15

EXIT RAMP NEUTRAL AREA (GORE) TREATMENT

DETAIL 36

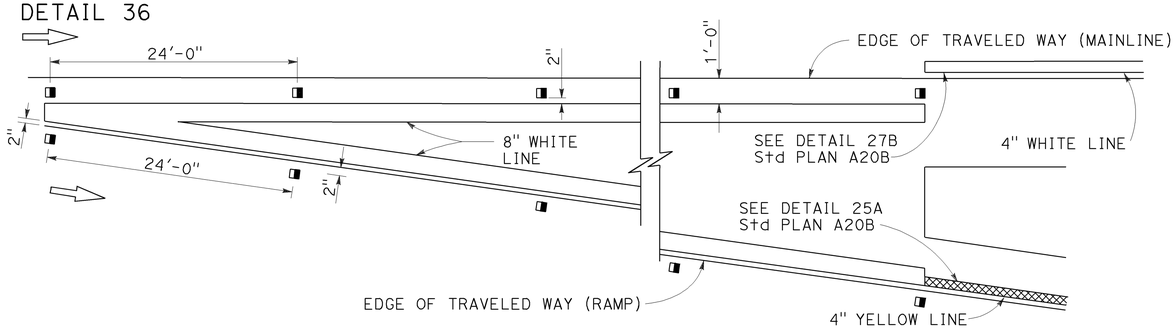

ENTRANCE RAMP NEUTRAL AREA (MERGE) TREATMENT

DETAIL 36A

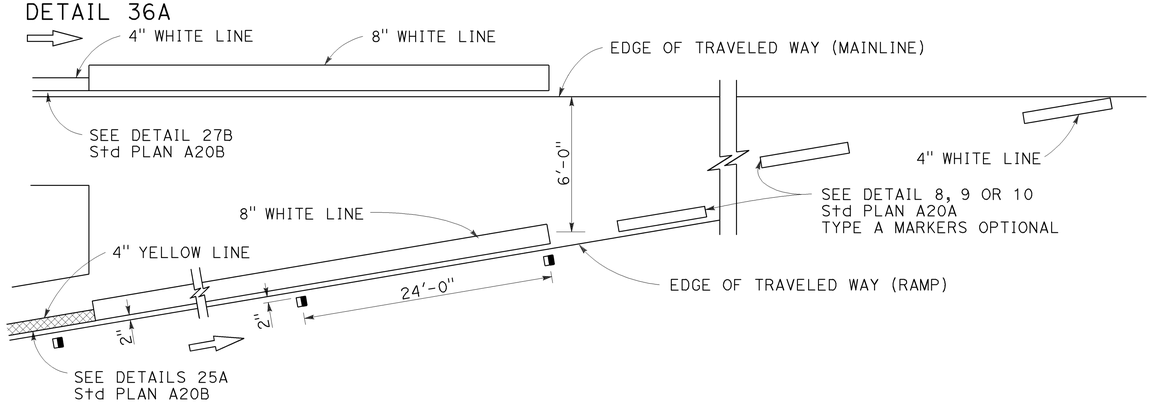

ENTRANCE RAMP NEUTRAL AREA (ACCELERATION LANE) TREATMENT

DETAIL 36B

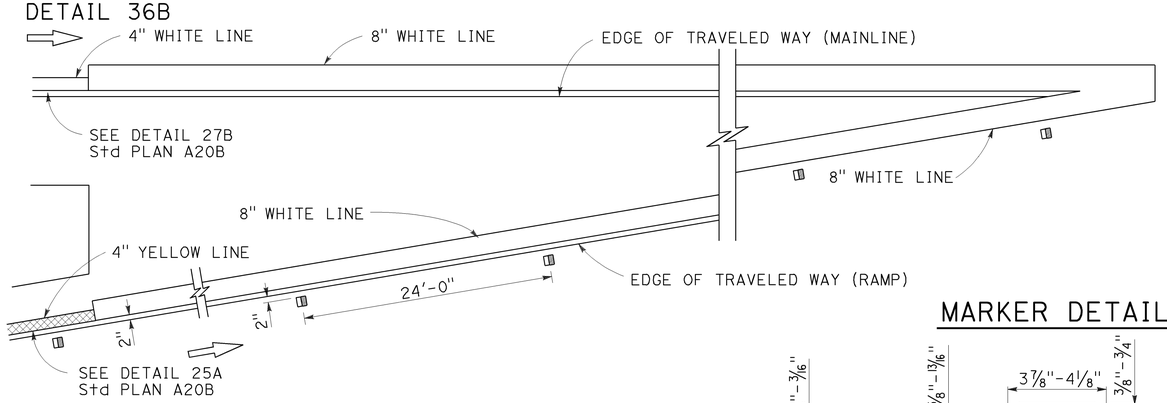

LANE DROP AT EXIT RAMPS

DETAIL 37

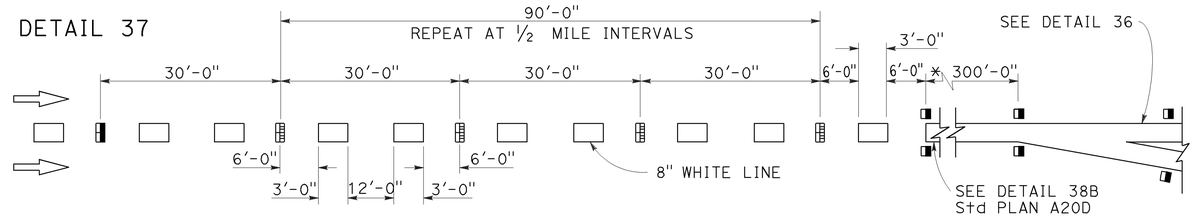

DETAIL 37A

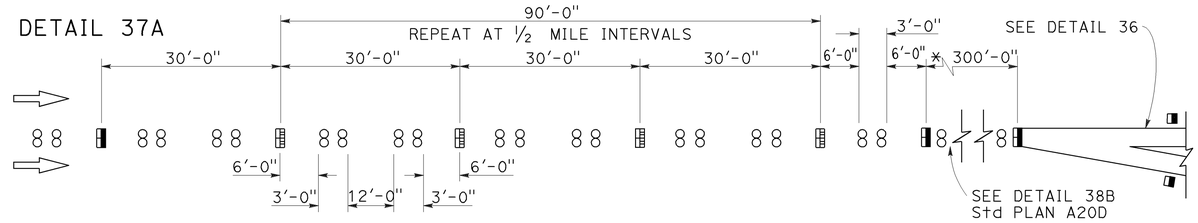

* The solid channelizing line shown may be omitted on short auxiliary lanes where weaving length is critical.

LANE DROP AT INTERSECTIONS

DETAIL 37B

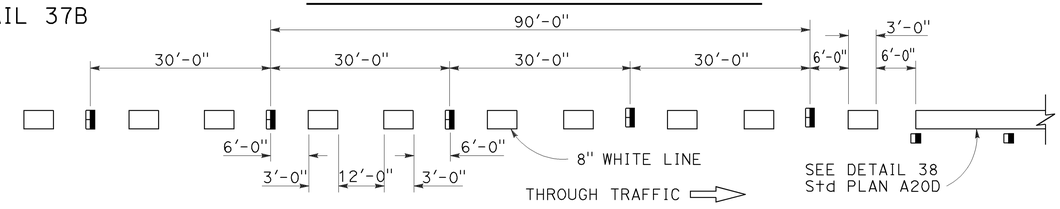

DETAIL 37C

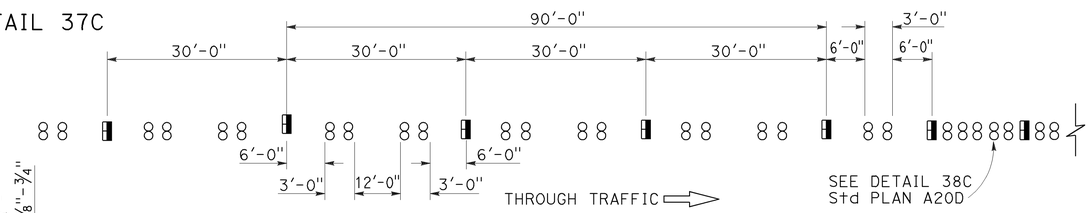

MARKER DETAILS

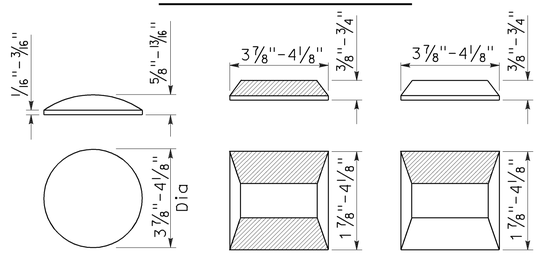

RETROREFLECTIVE FACE

LEGEND:

MARKERS

- ○ TYPE A WHITE NON-REFLECTIVE
- ⊟ TYPE C RED-CLEAR RETROREFLECTIVE
- ◨ TYPE G ONE-WAY CLEAR RETROREFLECTIVE

STATE OF CALIFORNIA
DEPARTMENT OF TRANSPORTATION

PAVEMENT MARKERS AND TRAFFIC LINE TYPICAL DETAILS

NO SCALE

RSP A20C DATED JULY 19, 2013 SUPERSEDES STANDARD PLAN A20C DATED MAY 20, 2011 - PAGE 11 OF THE STANDARD PLANS BOOK DATED 2010.

REVISED STANDARD PLAN RSP A20C

2010 REVISED STANDARD PLAN RSP A20C

4-29-13

Dist	COUNTY	ROUTE	POST MILES TOTAL PROJECT	SHEET No.	TOTAL SHEETS
04	Ala	580	R33.4	46	91

REGISTERED CIVIL ENGINEER

April 20, 2012
PLANS APPROVAL DATE

Roberta L. McLaughlin No. C40375 Exp. 3-31-13 CIVIL — REGISTERED PROFESSIONAL ENGINEER — STATE OF CALIFORNIA

THE STATE OF CALIFORNIA OR ITS OFFICERS OR AGENTS SHALL NOT BE RESPONSIBLE FOR THE ACCURACY OR COMPLETENESS OF SCANNED COPIES OF THIS PLAN SHEET.

TO ACCOMPANY PLANS DATED 6-22-15

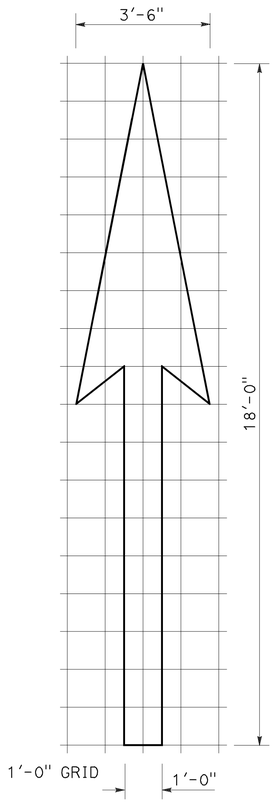

A=25 ft^2

TYPE I 18'-0" ARROW

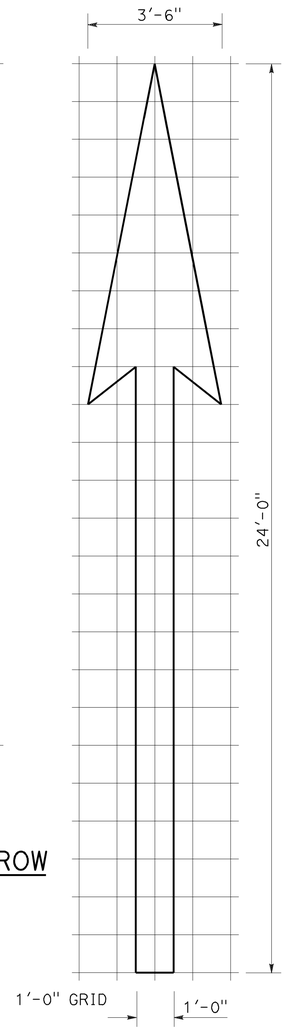

A=31 ft^2

TYPE I 24'-0" ARROW

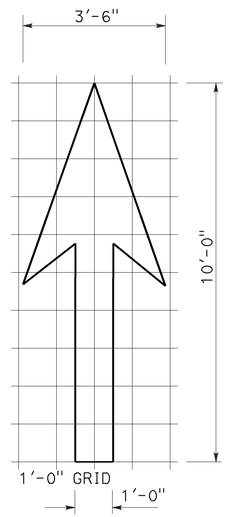

A=14 ft^2

TYPE I 10'-0" ARROW

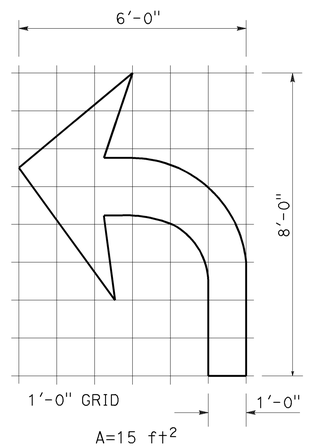

A=15 ft^2

TYPE IV (L) ARROW

(For Type IV (R) arrow, use mirror image)

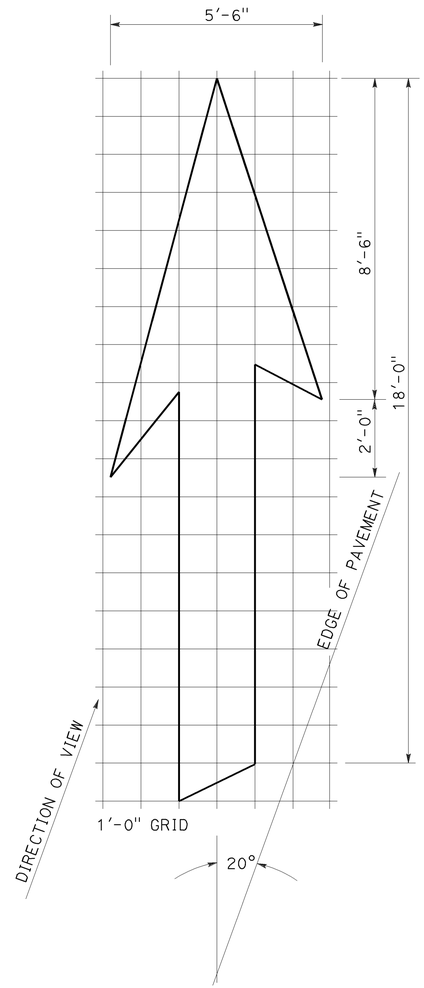

A=42 ft^2

TYPE VI ARROW

Right lane drop arrow
(For left lane, use mirror image)

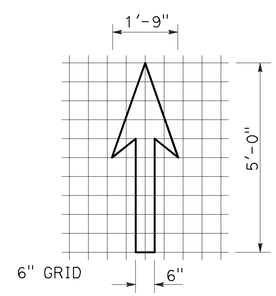

A=3.5 ft^2

BIKE LANE ARROW

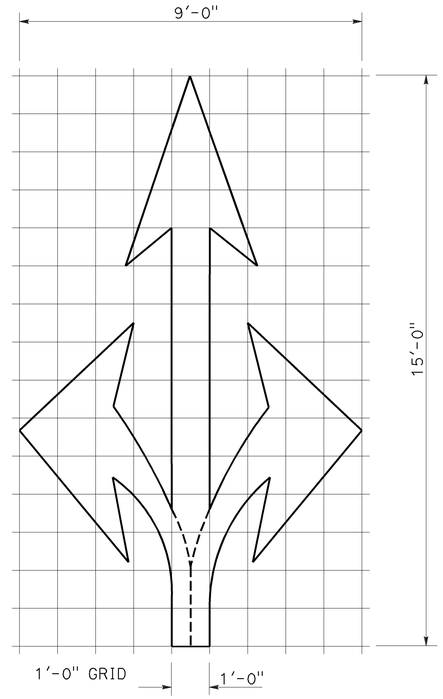

A=36 ft^2

TYPE VIII ARROW

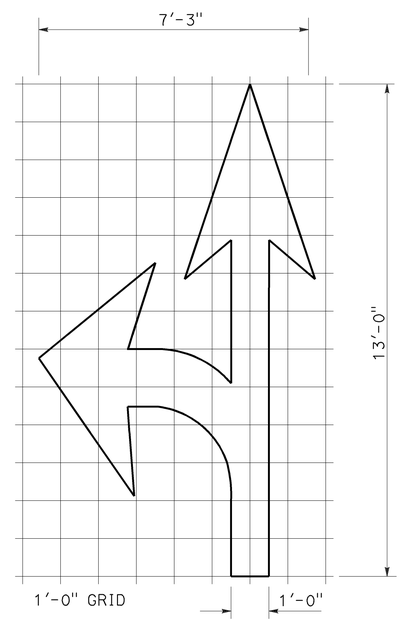

A=27 ft^2

TYPE VII (L) ARROW

(For Type VII (R) arrow, use mirror image)

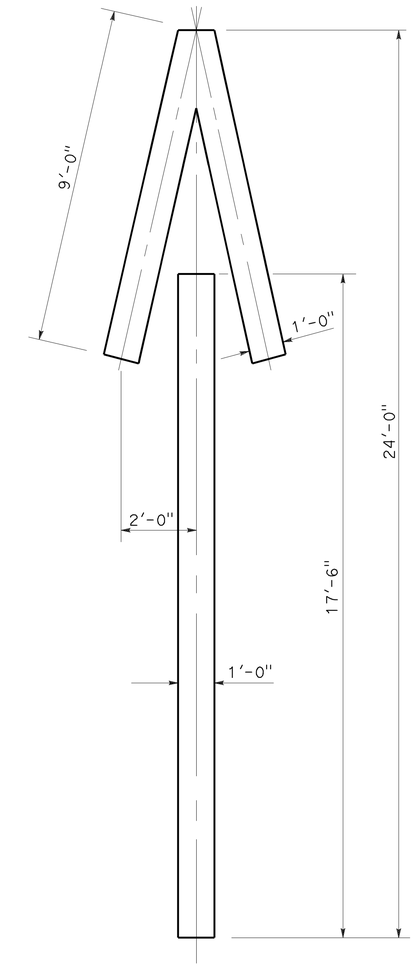

A=33 ft^2

TYPE V ARROW

NOTE:
Minor variations in dimensions may be accepted by the Engineer.

STATE OF CALIFORNIA
DEPARTMENT OF TRANSPORTATION

PAVEMENT MARKINGS ARROWS

NO SCALE

RSP A24A DATED APRIL 20, 2012 SUPERSEDES STANDARD PLAN A24A DATED MAY 20, 2011 - PAGE 13 OF THE STANDARD PLANS BOOK DATED 2010.

REVISED STANDARD PLAN RSP A24A

2010 REVISED STANDARD PLAN RSP A24A

3-14-12

Dist	COUNTY	ROUTE	POST MILES TOTAL PROJECT	SHEET No.	TOTAL SHEETS
04	Ala	580	R33.4	47	91

REGISTERED CIVIL ENGINEER

October 19, 2012
PLANS APPROVAL DATE

REGISTERED PROFESSIONAL ENGINEER
Roberta L. McLaughlin
No. C40375
Exp. 3-31-13
CIVIL
STATE OF CALIFORNIA

THE STATE OF CALIFORNIA OR ITS OFFICERS OR AGENTS SHALL NOT BE RESPONSIBLE FOR THE ACCURACY OR COMPLETENESS OF SCANNED COPIES OF THIS PLAN SHEET.

NOTE: TO ACCOMPANY PLANS DATED 6-22-15

Minor variations in dimensions may be accepted by the Engineer.

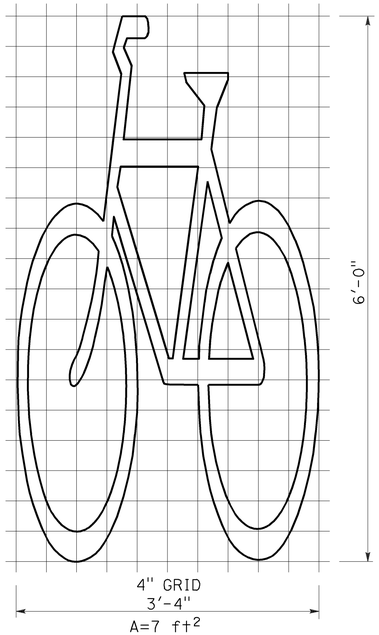

BIKE LANE SYMBOL WITHOUT PERSON

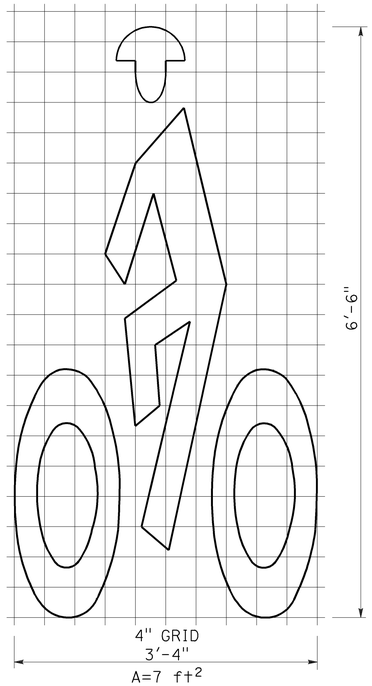

BIKE LANE SYMBOL WITH PERSON

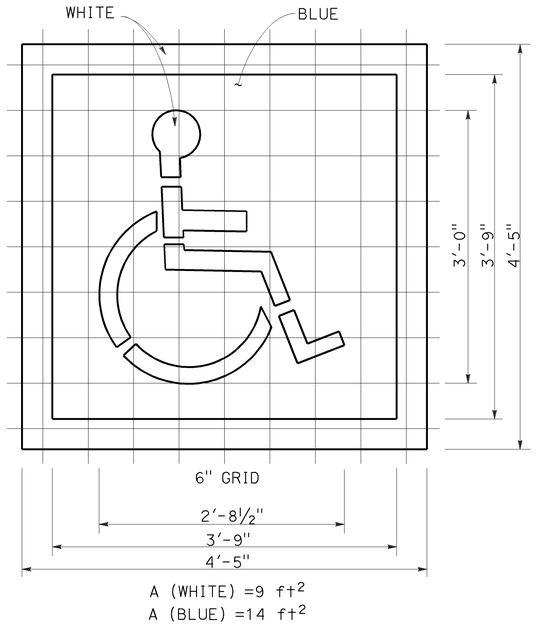

INTERNATIONAL SYMBOL OF ACCESSIBILITY (ISA) MARKING

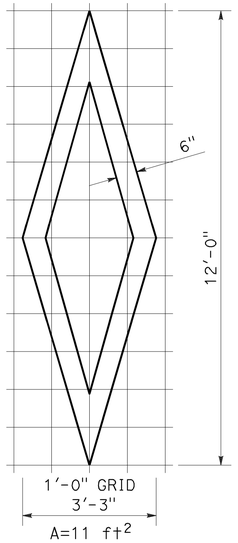

DIAMOND SYMBOL

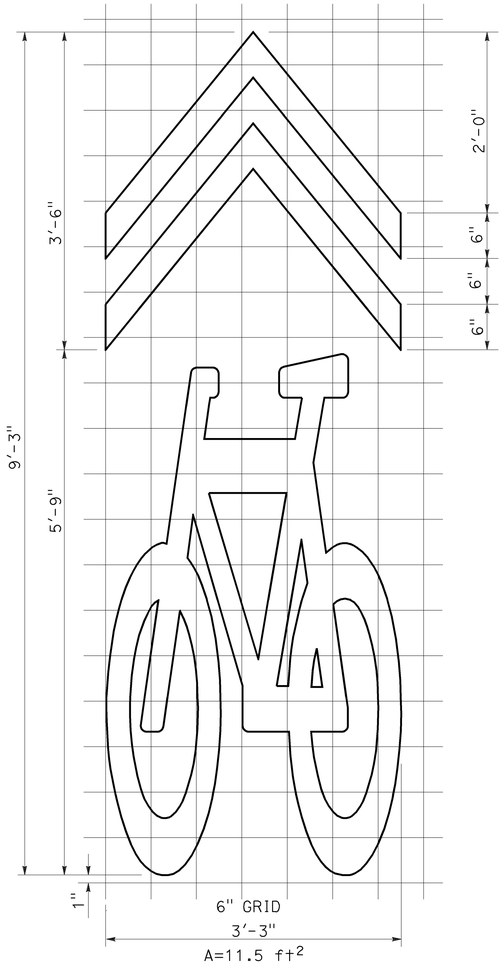

SHARED ROADWAY BICYCLE MARKING

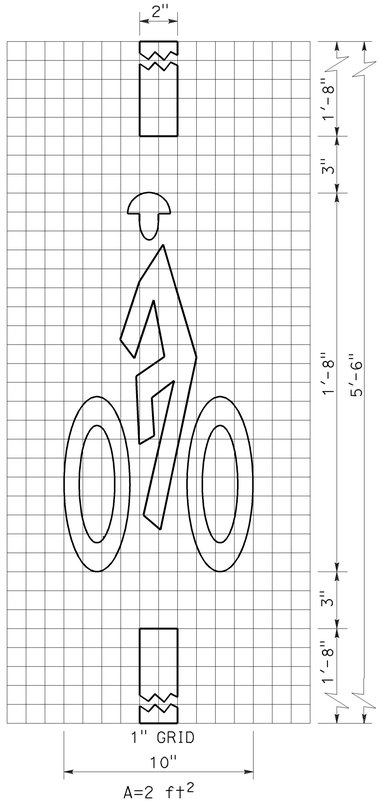

BICYCLE LOOP DETECTOR SYMBOL

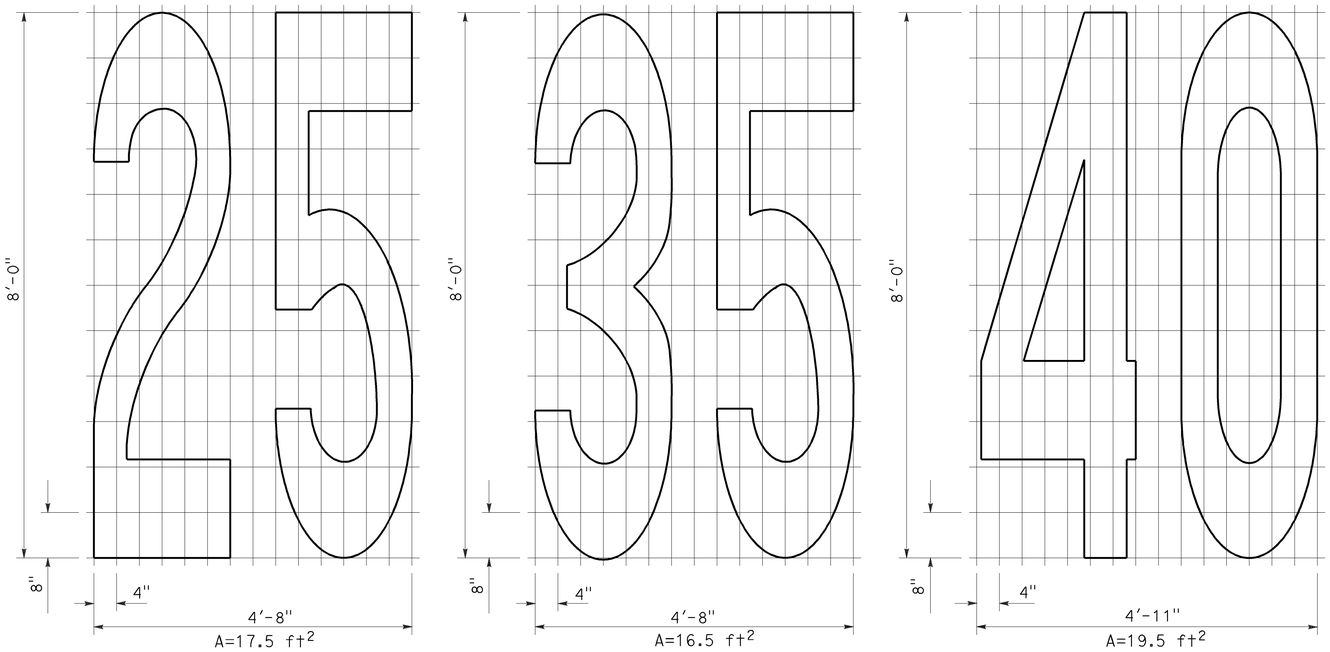

NUMERALS

STATE OF CALIFORNIA
DEPARTMENT OF TRANSPORTATION

PAVEMENT MARKINGS SYMBOLS AND NUMERALS

NO SCALE

RSP A24C DATED OCTOBER 19, 2012 SUPERSEDES STANDARD PLAN A24C DATED MAY 20, 2011 - PAGE 15 OF THE STANDARD PLANS BOOK DATED 2010.

REVISED STANDARD PLAN RSP A24C

2010 REVISED STANDARD PLAN RSP A24C

6-28-12

Dist	COUNTY	ROUTE	POST MILES TOTAL PROJECT	SHEET No.	TOTAL SHEETS
04	Ala	580	R33.4	48	91

Randell D. Hiatt
REGISTERED CIVIL ENGINEER

July 19, 2013
PLANS APPROVAL DATE

REGISTERED PROFESSIONAL ENGINEER
Randell D. Hiatt
No. C50200
Exp. 6-30-15
CIVIL
STATE OF CALIFORNIA

THE STATE OF CALIFORNIA OR ITS OFFICERS OR AGENTS SHALL NOT BE RESPONSIBLE FOR THE ACCURACY OR COMPLETENESS OF SCANNED COPIES OF THIS PLAN SHEET.

TO ACCOMPANY PLANS DATED 6-22-15

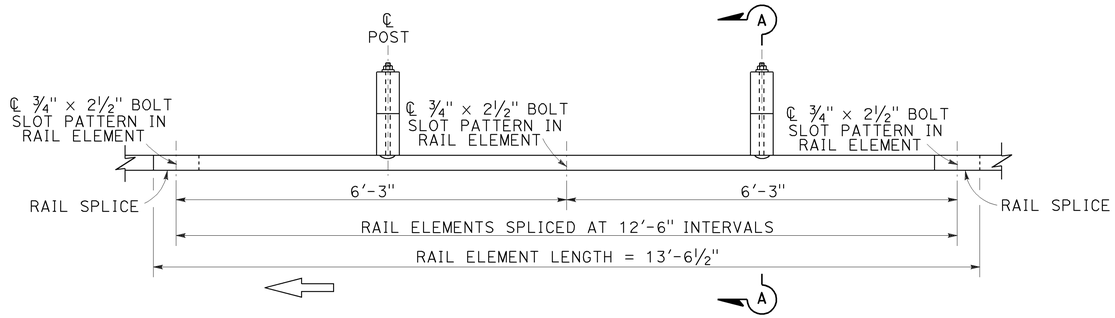

PLAN

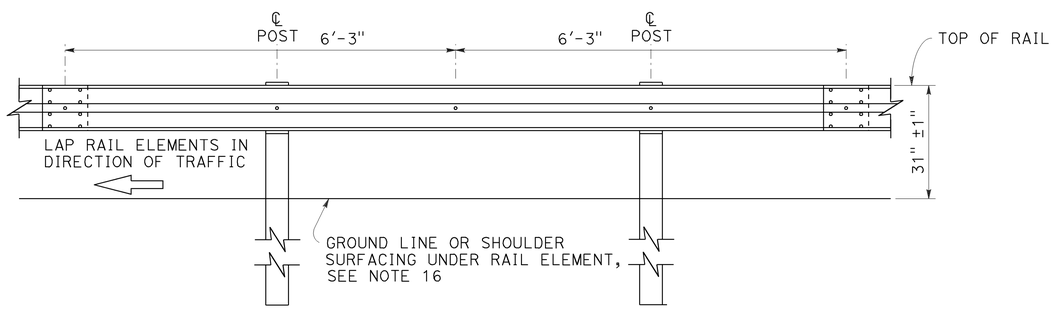

ELEVATION

MIDWEST GUARDRAIL SYSTEM WITH WOOD POST AND BLOCKS

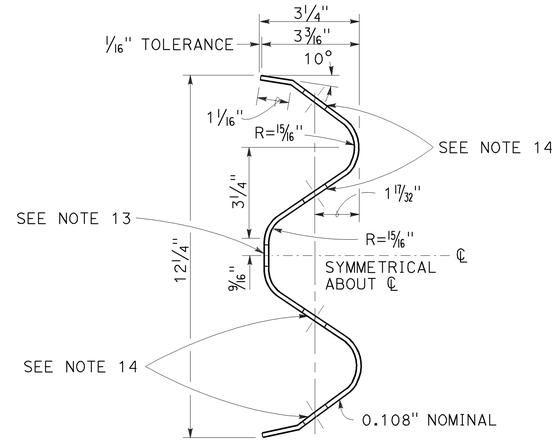

SECTION THRU RAIL ELEMENT

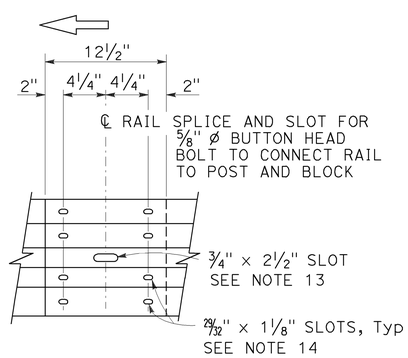

ELEVATION

RAIL ELEMENT SPLICE DETAIL

a) Connect the over lapped end of the rail elements with ⅝" ø × 1⅜" button head oval shoulder splice bolts inserted into the 29⁄32" × 1⅛" slots and bolted together with ⅝" ø recessed hex nuts. Recess of hex nut points toward rail element. A total of 8 bolts and nuts are to be used at each rail splice connection.

b) The ends of the rail elements are to be overlapped in the direction of traffic (see details).

c) Where end cap is to be attached to the end of a rail element, a total of 4 of the above described splice bolts and nuts are to be used.

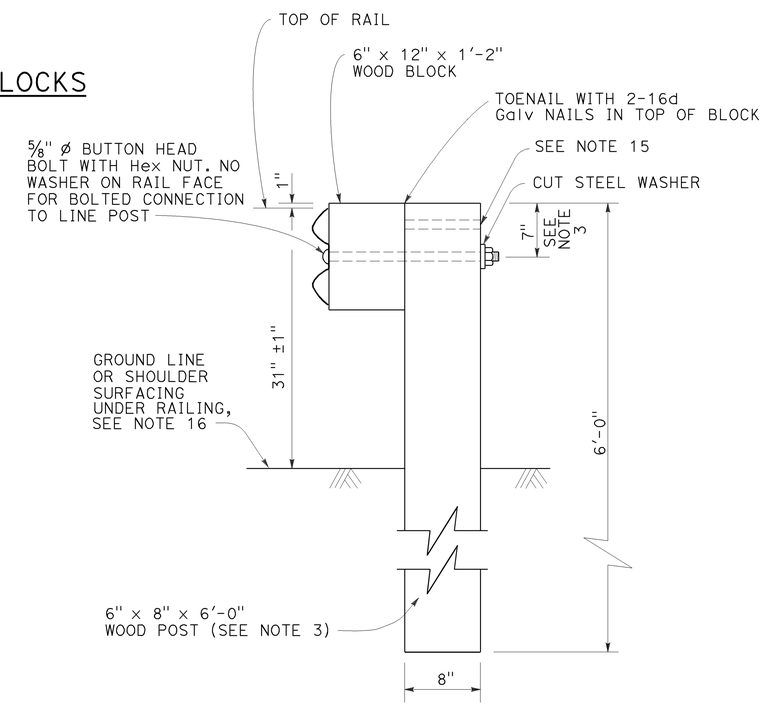

SECTION A-A

TYPICAL WOOD LINE POST INSTALLATION

See Note 4

NOTES:

1. For details of steel post installations, see Revised Standard Plan RSP A77L2.
2. For details of standard hardware used to construct MGS, see Revised Standard Plan RSP A77M1.
3. For details of wood posts and wood blocks used to construct MGS, see Revised Standard Plan RSP A77N1.
4. For additional installation details, see Revised Standard Plan RSP A77N3.
5. MGS post spacing to be 6'-3" center to center, except as otherwise noted.
6. For MGS typical layouts, see the A77P, A77Q and A77R Series of Standard Plans.
7. If railing is connected to terminal system end treatment, use 31" height terminal system end treatment.
8. For MGS end anchor details, see Revised Standard Plans RSP A77S1 and RSP A77T2.
9. For details of MGS transition to bridge railing, see Revised Standard Plan RSP A77U4.
10. For additional details of MSG connection to bridge railing, see Revised Standard Plans RSP A77U1, RSP A77U2 and RSP A77V1.
11. For MGS connection details to abutments and walls, see Revised Standard Plan RSP A77U3.
12. For typical MGS delineation and dike positioning details, see Revised Standard Plan RSP A77N4.
13. Slotted hole for bolted connection of rail element to block and post. See "Section Thru Rail Element".
14. Slotted holes for splice bolts to overlap ends of rail element. See "Section Thru Rail Element".
15. Additional hole in uppermost portion of line post is for potential future adjustments of railing height. See Revised Standard Plan RSP A77N1.
16. Install posts in soil.

STATE OF CALIFORNIA
DEPARTMENT OF TRANSPORTATION

MIDWEST GUARDRAIL SYSTEM STANDARD RAILING SECTION (WOOD POST WITH WOOD BLOCK)

NO SCALE

RSP A77L1 DATED JULY 19, 2013 SUPPLEMENTS STANDARD PLANS BOOK DATED 2010.

REVISED STANDARD PLAN RSP A77L1

2010 REVISED STANDARD PLAN RSP A77L1

7-3-13

Dist	COUNTY	ROUTE	POST MILES TOTAL PROJECT	SHEET No.	TOTAL SHEETS
04	Ala	580	R33.4	49	91

Randell D. Hiatt
REGISTERED CIVIL ENGINEER

July 19, 2013
PLANS APPROVAL DATE

REGISTERED PROFESSIONAL ENGINEER
Randell D. Hiatt
No. C50200
Exp. 6-30-15
CIVIL
STATE OF CALIFORNIA

THE STATE OF CALIFORNIA OR ITS OFFICERS OR AGENTS SHALL NOT BE RESPONSIBLE FOR THE ACCURACY OR COMPLETENESS OF SCANNED COPIES OF THIS PLAN SHEET.

TO ACCOMPANY PLANS DATED 6-22-15

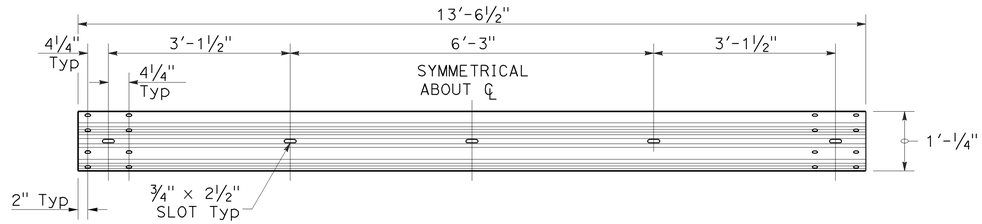

TYPICAL RAIL ELEMENT

NOTE:

1. Slotted holes for splice bolts to overlap ends of rail element.

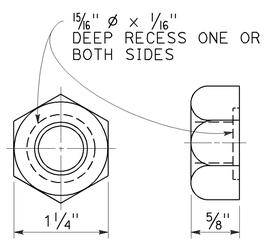

⅝" Ø RECESS NUT

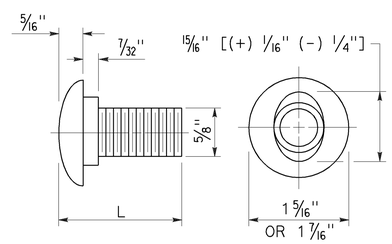

⅝" Ø BUTTON HEAD BOLT

BUTTON HEAD BOLT

L	THREAD LENGTH
1⅜"	FULL THREAD LENGTH
2"	FULL THREAD LENGTH
10"	4" Min THREAD LENGTH
18"	4" Min THREAD LENGTH
20"	4" Min THREAD LENGTH
22"	4" Min THREAD LENGTH
26"	4" Min THREAD LENGTH
36"	4" Min THREAD LENGTH
** 2¾"	2" Min THREAD LENGTH
** 19"	4" Min THREAD LENGTH

** For nested rail applications.

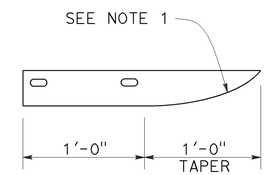

PLAN

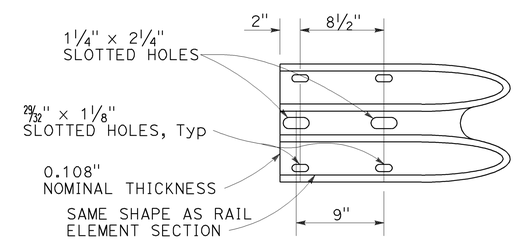

ELEVATION

END CAP
(TYPE A)

STATE OF CALIFORNIA
DEPARTMENT OF TRANSPORTATION

MIDWEST GUARDRAIL SYSTEM STANDARD HARDWARE

NO SCALE

RSP A77M1 DATED JULY 19, 2013 SUPPLEMENTS THE STANDARD PLANS BOOK DATED 2010.

REVISED STANDARD PLAN RSP A77M1

2010 REVISED STANDARD PLAN RSP A77M1

7-3-13

Dist	COUNTY	ROUTE	POST MILES TOTAL PROJECT	SHEET No.	TOTAL SHEETS
04	Ala	580	R33.4	50	91

Randell D. Hiatt
REGISTERED CIVIL ENGINEER

July 19, 2013
PLANS APPROVAL DATE

REGISTERED PROFESSIONAL ENGINEER
Randell D. Hiatt
No. C50200
Exp. 6-30-15
CIVIL
STATE OF CALIFORNIA

THE STATE OF CALIFORNIA OR ITS OFFICERS OR AGENTS SHALL NOT BE RESPONSIBLE FOR THE ACCURACY OR COMPLETENESS OF SCANNED COPIES OF THIS PLAN SHEET.

TO ACCOMPANY PLANS DATED 6-22-15

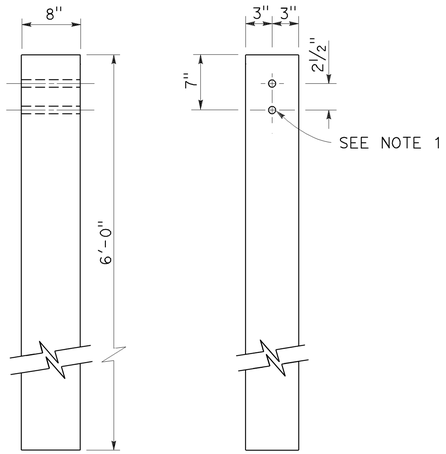

SIDE FRONT

6" x 8" WOOD POST
See Note 3

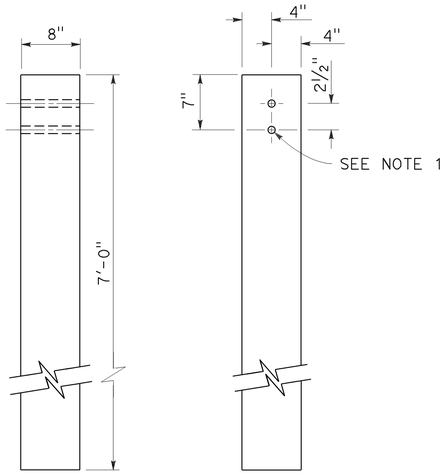

SIDE FRONT

8" x 8" WOOD POST
See Note 4

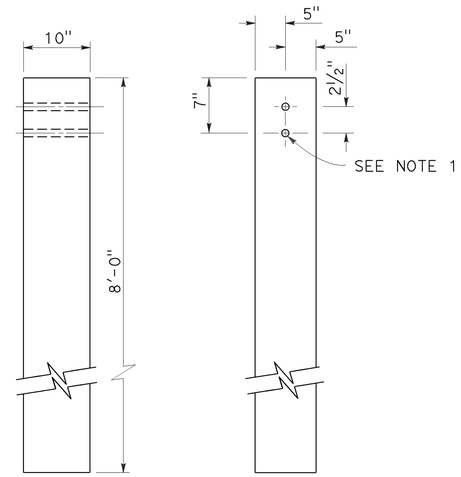

SIDE FRONT

10" x 10" WOOD POST
See Note 5

NOTES:

1. All holes in wood posts and blocks shall be 3/4" Dia ± 1/16".
2. Dimensions shown for wood post are nominal.
3. This post and block combination used for standard line post sections of MGS.
4. This post and 8" x 12" block combination used for line post sections of MGS on narrow roadways.
5. This post and 8" x 12" block combination is typically used where strengthened line post sections of MGS are warranted to shield fixed objects.
6. See Revised Standard Plan RSP A77L3 for use of 6" x 8" and 8" x 8" wood blocks.

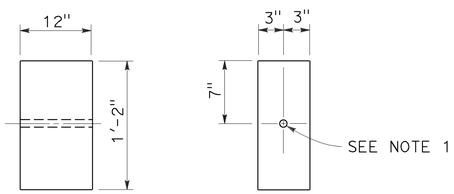

SIDE FRONT

6" x 12" WOOD BLOCK
See Note 3

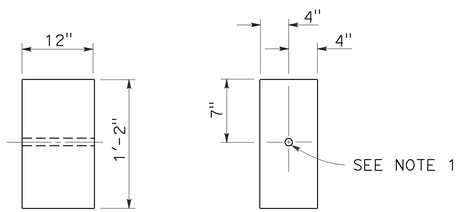

SIDE FRONT

8" x 12" WOOD BLOCK

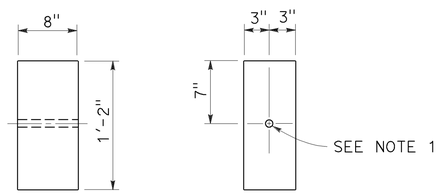

SIDE FRONT

6" x 8" WOOD BLOCK
Only for use with metal beam guard rail see Note 6

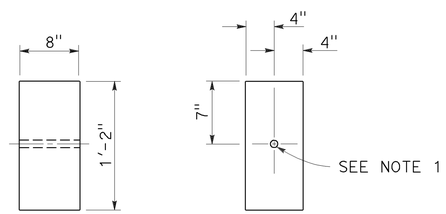

SIDE FRONT

8" x 8" WOOD BLOCK
Only for use with metal beam guard rail see Note 6

STATE OF CALIFORNIA
DEPARTMENT OF TRANSPORTATION

MIDWEST GUARDRAIL SYSTEM WOOD POST AND WOOD BLOCK DETAILS

NO SCALE

RSP A77N1 DATED JULY 19, 2013 SUPPLEMENTS THE STANDARD PLANS BOOK DATED 2010.

REVISED STANDARD PLAN RSP A77N1

2010 REVISED STANDARD PLAN RSP A77N1

7-3-13

Dist	COUNTY	ROUTE	POST MILES TOTAL PROJECT	SHEET No.	TOTAL SHEETS
04	Ala	580	R33.4	51	91

Randell D. Hiatt
REGISTERED CIVIL ENGINEER

November 15, 2013
PLANS APPROVAL DATE

REGISTERED PROFESSIONAL ENGINEER
Randell D. Hiatt
No. C50200
Exp. 6-30-15
CIVIL
STATE OF CALIFORNIA

THE STATE OF CALIFORNIA OR ITS OFFICERS OR AGENTS SHALL NOT BE RESPONSIBLE FOR THE ACCURACY OR COMPLETENESS OF SCANNED COPIES OF THIS PLAN SHEET.

TO ACCOMPANY PLANS DATED 6-22-15

2010 REVISED STANDARD PLAN RSP A77N3

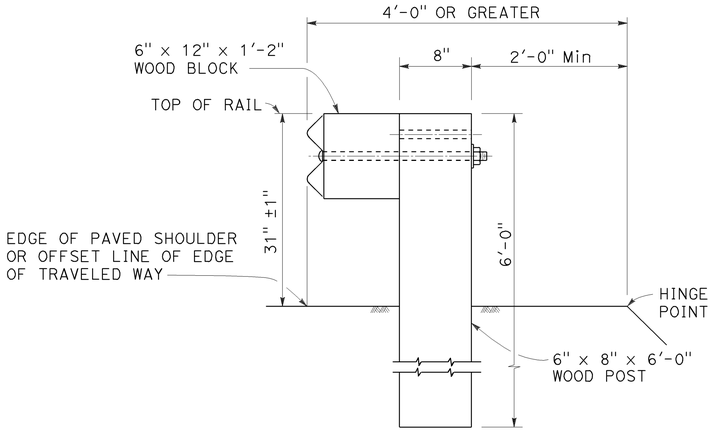

DETAIL A

TYPICAL ROADWAY INSTALLATION

See Note 1

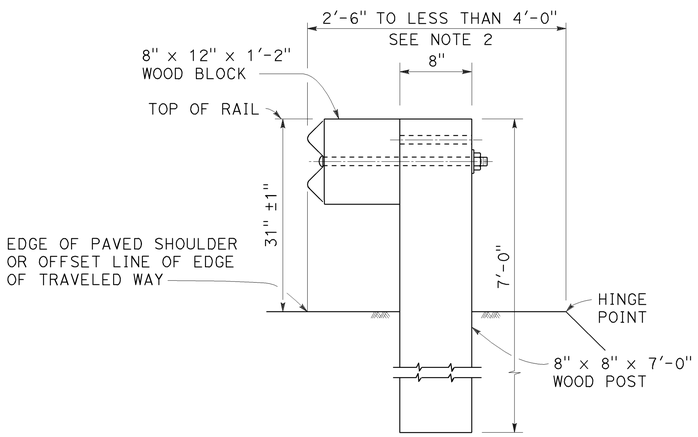

DETAIL B

NARROW ROADWAY INSTALLATION

See Note 1

POST EMBEDMENT

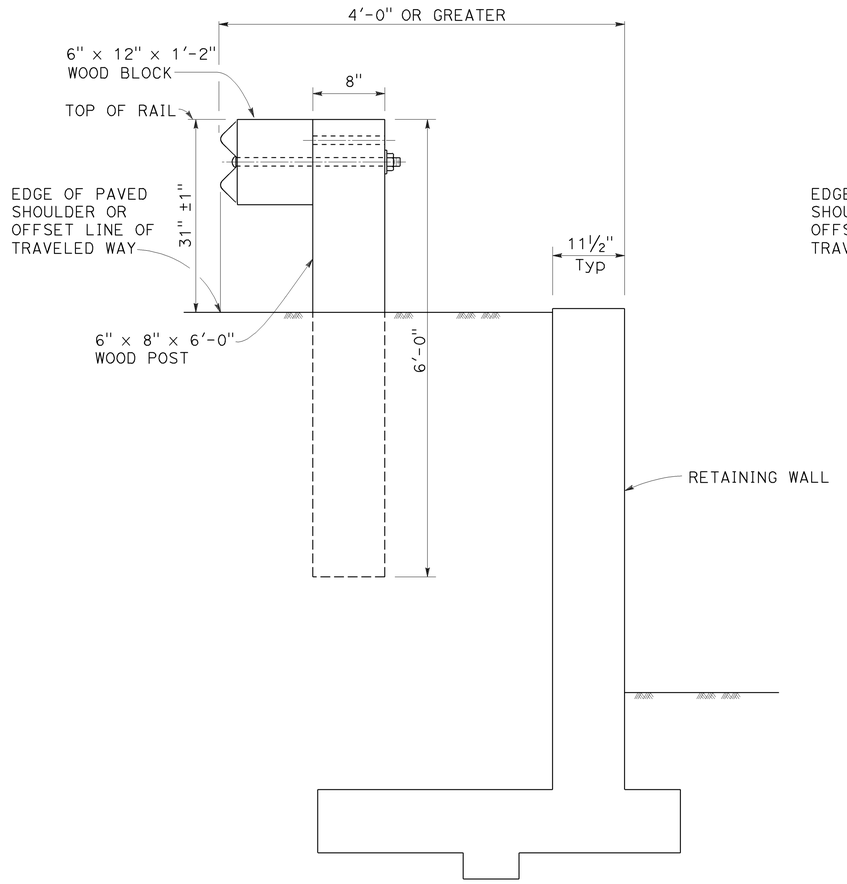

DETAIL C

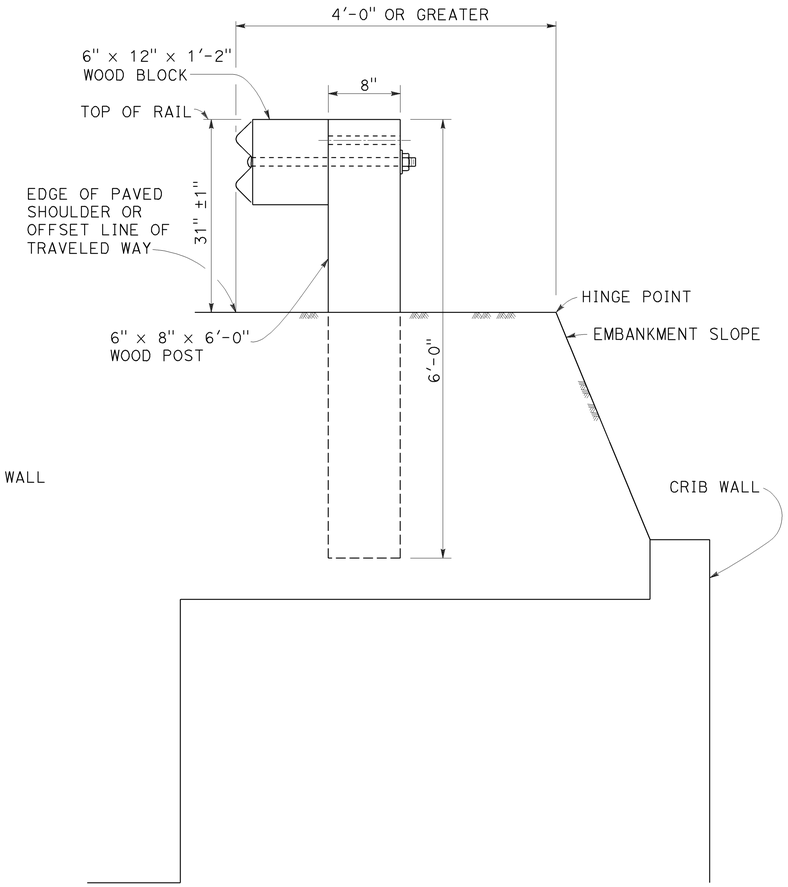

DETAIL D

INSTALLATION AT EARTH RETAINING WALLS

NOTES:

1. These installation details also applicable to steel line post installations. For Detail A, C, and D, where steel line post installations are constructed, W6 x 8.5 or W6 x 9 steel post, 6'-0" in length, with 6" x 12" x 1'-2" notched wood blocks or notched recycled plastic blocks are to be used in place of the size of wood post and wood block shown. For Detail B, where steel line post installations are constructed, W6 x 15 steel post, 8'-0" in length, with 8" x 12" x 1'-2" notched wood blocks or notched recycled plastic blocks are to be used in place of the size of wood post and wood block shown. For additional installation details, see Revised Standard Plan RSP A77L1 and RSP A77L2.
2. Where the distance between the face of the rail and the hinge point is less than 2'-6", see the Project Plans for special details.
3. For dike positioning with MGS installations, see Revised Standard Plan RSP A77N4.

STATE OF CALIFORNIA
DEPARTMENT OF TRANSPORTATION

MIDWEST GUARDRAIL SYSTEM TYPICAL LINE POST EMBEDMENT AND HINGE POINT OFFSET DETAILS

NO SCALE

RSP A77N3 DATED NOVEMBER 15, 2013 SUPERSEDES RSP A77N3
DATED JULY 19, 2013 THAT SUPPLEMENTS THE STANDARD PLANS BOOK DATED 2010.

REVISED STANDARD PLAN RSP A77N3

10-29-13

Dist	COUNTY	ROUTE	POST MILES TOTAL PROJECT	SHEET No.	TOTAL SHEETS
04	Ala	580	R33.4	52	91

Randell D. Hiatt
REGISTERED CIVIL ENGINEER

July 19, 2013
PLANS APPROVAL DATE

REGISTERED PROFESSIONAL ENGINEER
Randell D. Hiatt
No. C50200
Exp. 6-30-15
CIVIL
STATE OF CALIFORNIA

THE STATE OF CALIFORNIA OR ITS OFFICERS OR AGENTS SHALL NOT BE RESPONSIBLE FOR THE ACCURACY OR COMPLETENESS OF SCANNED COPIES OF THIS PLAN SHEET.

TO ACCOMPANY PLANS DATED 6-22-15

NOTES:

1. When necessary to place dike more than 7" in front of face of MGS, only Type C dike may be used. For dike details, see Revised Standard Plan RSP A87B.
2. For standard railing post embedment, see Revised Standard Plan RSP A77N3.
3. MGS delineation to be used where shown on the Project Plans.
4. When dike or curb is placed under MGS, the maximum height of the dike or curb shall be 6". Mountable dike should not be used. For dike and curb details, see Revised Standard Plans RSP A87A and RSP A87B.
5. For details of typical distance between the face of rail and hinge point, see Revised Standard Plan RSP A77N3.
6. For steel line posts, use 1/4 - 20 self-tapping screws in 0.22" diameter holes or 1/4" bolts in 9/32" diameter holes.

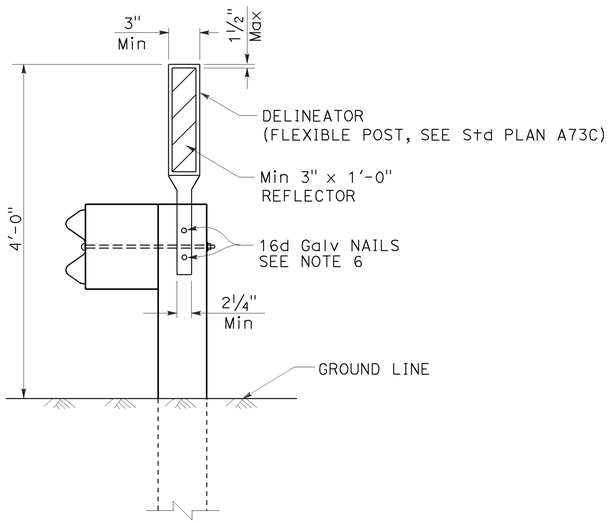

MGS DELINEATION

See Note 3

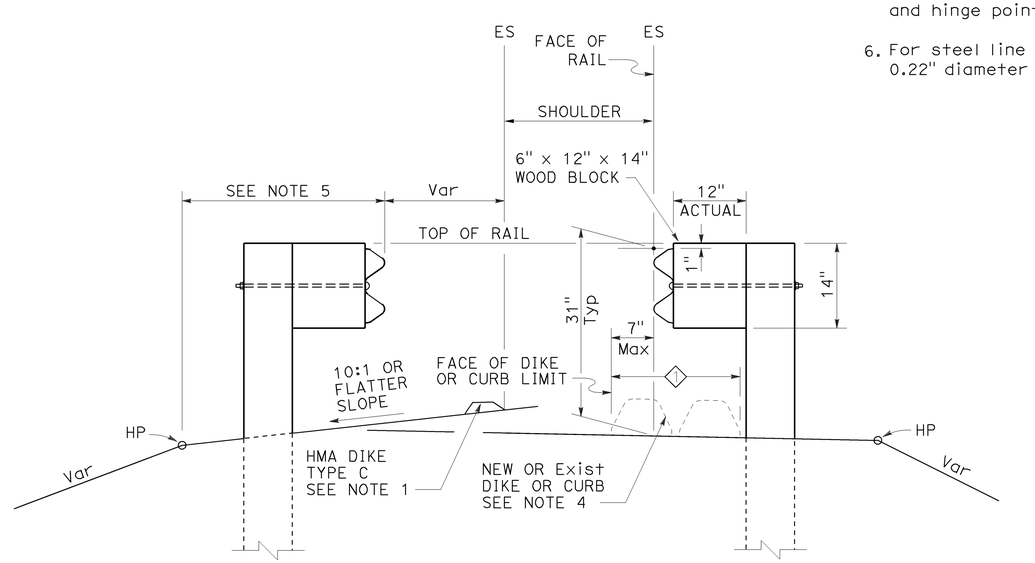

DIKE POSITIONING

See Note 1

1 PERMISSIBLE DIKE OR CURB PLACEMENT AREA

STATE OF CALIFORNIA
DEPARTMENT OF TRANSPORTATION

MIDWEST GUARDRAIL SYSTEM TYPICAL RAILING DELINEATION AND DIKE POSITIONING DETAILS

NO SCALE

RSP A77N4 DATED JULY 19, 2013 SUPPLEMENTS THE STANDARD PLANS BOOK DATED 2010.

REVISED STANDARD PLAN RSP A77N4

2010 REVISED STANDARD PLAN RSP A77N4

7-10-13

Dist	COUNTY	ROUTE	POST MILES TOTAL PROJECT	SHEET No.	TOTAL SHEETS
04	Ala	580	R33.4	53	91

Randell D. Hiatt
REGISTERED CIVIL ENGINEER

July 19, 2013
PLANS APPROVAL DATE

REGISTERED PROFESSIONAL ENGINEER
Randell D. Hiatt
No. C50200
Exp. 6-30-15
CIVIL
STATE OF CALIFORNIA

THE STATE OF CALIFORNIA OR ITS OFFICERS OR AGENTS SHALL NOT BE RESPONSIBLE FOR THE ACCURACY OR COMPLETENESS OF SCANNED COPIES OF THIS PLAN SHEET.

TO ACCOMPANY PLANS DATED 6-22-15

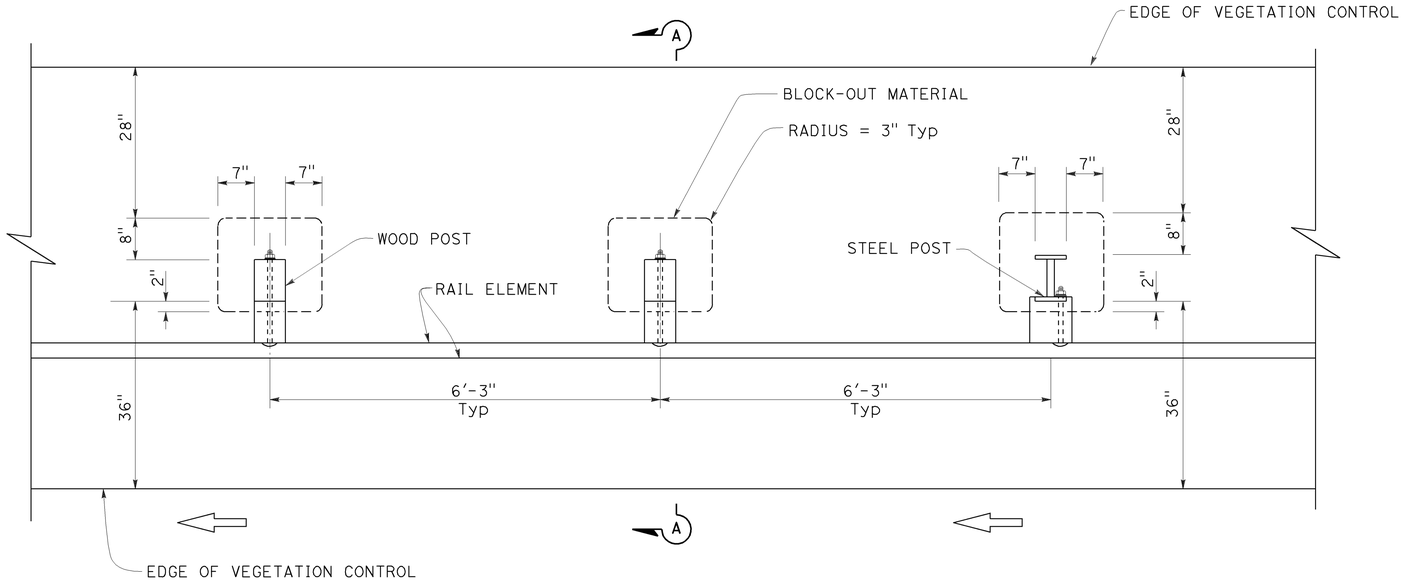

PLAN

NOTES:

1. Where the distance between back of post and hinge point is less than 42", construct vegetation control to 6" from hinge point while maintaining the 8" block-out at back of post. If the 8" block-out at back of post can not be maintained, construct vegetation control flush with the back edge of post.
2. Where dike is constructed under railing, construct vegetation control to back edge of dike. Where paved shoulder is constructed within 36" in front of the post, construct vegetation control to the edge of paved shoulder.
3. For wood post sizes, see Revised Standard Plan RSP A77N1.
4. For steel post sizes, see Revised Standard Plan RSP A77N2.
5. For details not shown, see Revised Standard Plans RSP A77L1 and RSP A77L2.

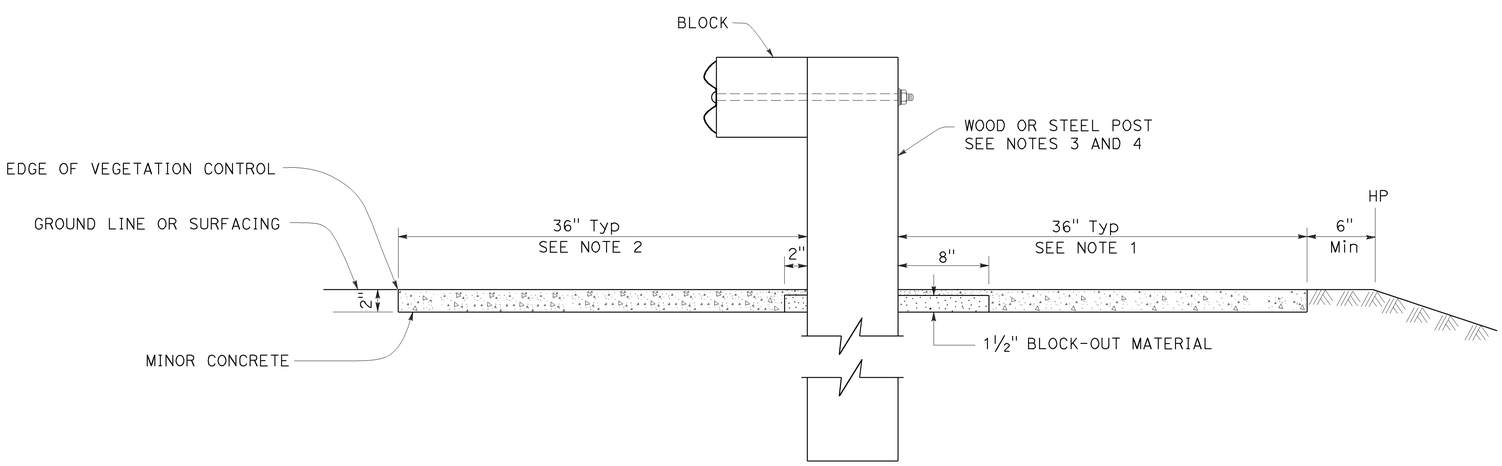

SECTION A-A

STATE OF CALIFORNIA
DEPARTMENT OF TRANSPORTATION

MIDWEST GUARDRAIL SYSTEM TYPICAL VEGETATION CONTROL STANDARD RAILING SECTION

NO SCALE

RSP A77N5 DATED JULY 19, 2013 SUPPLEMENTS THE STANDARD PLANS BOOK DATED 2010.

REVISED STANDARD PLAN RSP A77N5

2010 REVISED STANDARD PLAN RSP A77N5

7-3-13

Dist	COUNTY	ROUTE	POST MILES TOTAL PROJECT	SHEET No.	TOTAL SHEETS
04	Ala	580	R33.4	54	91

Randell D. Hiatt
REGISTERED CIVIL ENGINEER

July 19, 2013
PLANS APPROVAL DATE

REGISTERED PROFESSIONAL ENGINEER
Randell D. Hiatt
No. C50200
Exp. 6-30-15
CIVIL
STATE OF CALIFORNIA

THE STATE OF CALIFORNIA OR ITS OFFICERS OR AGENTS SHALL NOT BE RESPONSIBLE FOR THE ACCURACY OR COMPLETENESS OF SCANNED COPIES OF THIS PLAN SHEET.

TO ACCOMPANY PLANS DATED 6-22-15

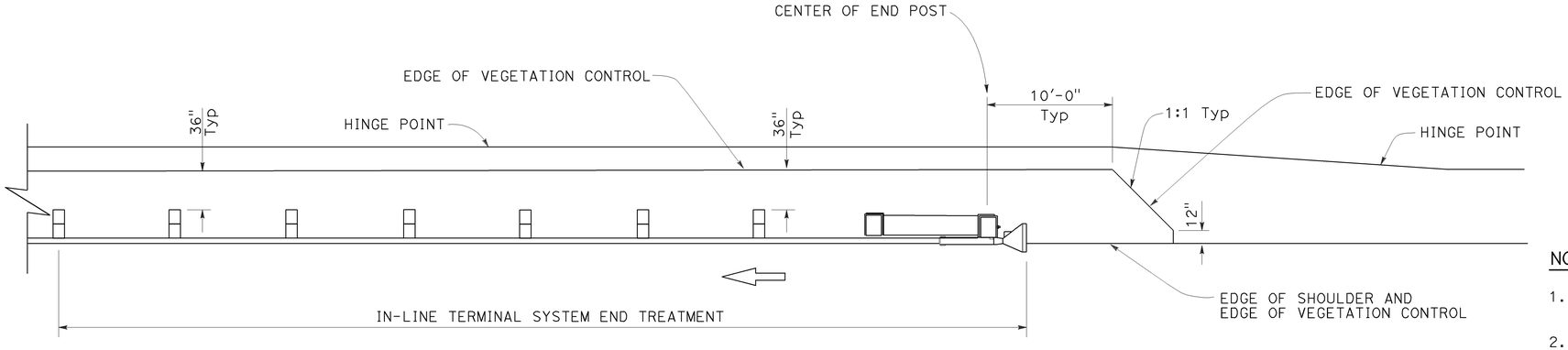

PLAN

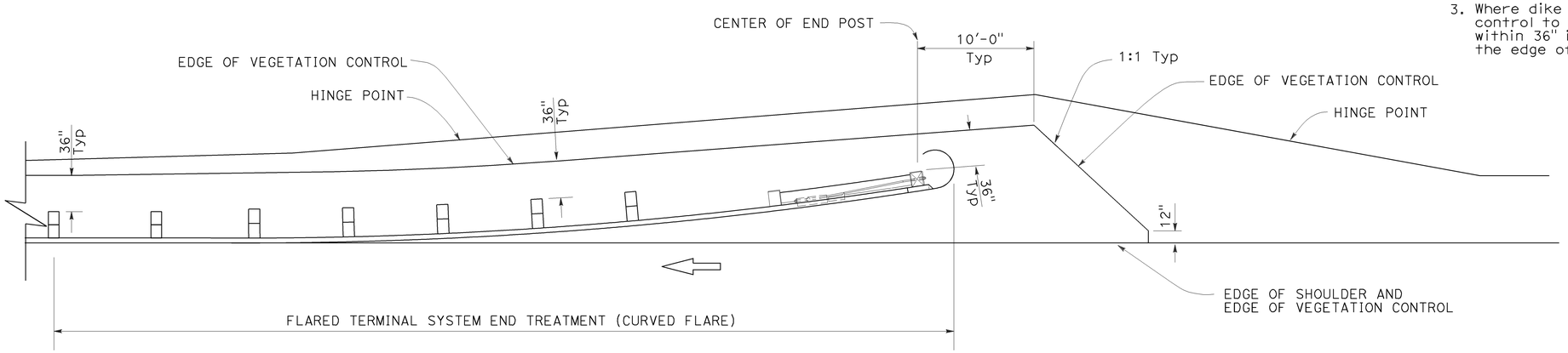

PLAN

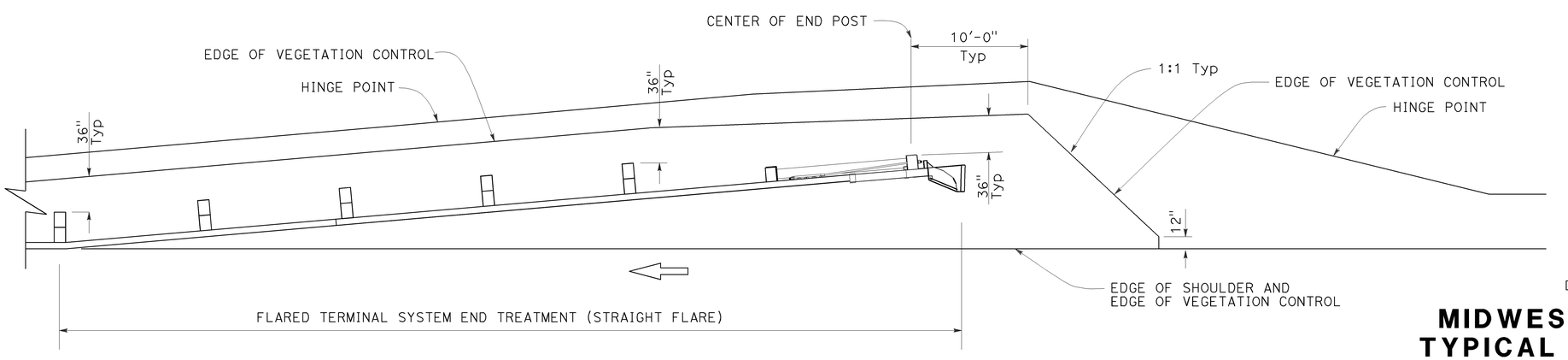

PLAN

NOTES:

1. See Revised Standard Plan RSP A77N5 for additional vegetation control details.
2. Where the distance between back of post and hinge point is less than 42", construct vegetation control to 6" from hinge point while maintaining the 8" block-out at back of post. If the 8" block-out at back of post can not be maintained, construct vegetation control flush with the back edge of post.
3. Where dike is constructed under railing, construct vegetation control to back edge of dike. Where paved shoulder is constructed within 36" in front of the post, construct vegetation control to the edge of paved shoulder.

STATE OF CALIFORNIA
DEPARTMENT OF TRANSPORTATION

MIDWEST GUARDRAIL SYSTEM TYPICAL VEGETATION CONTROL FOR TERMINAL SYSTEM END TREATMENTS

NO SCALE

RSP A77N6 DATED JULY 19, 2013 SUPPLEMENTS THE STANDARD PLANS BOOK DATED 2010.

REVISED STANDARD PLAN RSP A77N6

2010 REVISED STANDARD PLAN RSP A77N6

6-12-13

Dist	COUNTY	ROUTE	POST MILES TOTAL PROJECT	SHEET No.	TOTAL SHEETS
04	Ala	580	R33.4	55	91

Randell D. Hiatt
REGISTERED CIVIL ENGINEER

November 15, 2013
PLANS APPROVAL DATE

REGISTERED PROFESSIONAL ENGINEER
Randell D. Hiatt
No. C50200
Exp. 6-30-15
CIVIL
STATE OF CALIFORNIA

THE STATE OF CALIFORNIA OR ITS OFFICERS OR AGENTS SHALL NOT BE RESPONSIBLE FOR THE ACCURACY OR COMPLETENESS OF SCANNED COPIES OF THIS PLAN SHEET.

TO ACCOMPANY PLANS DATED 6-22-15

2010 REVISED STANDARD PLAN RSP A77P1

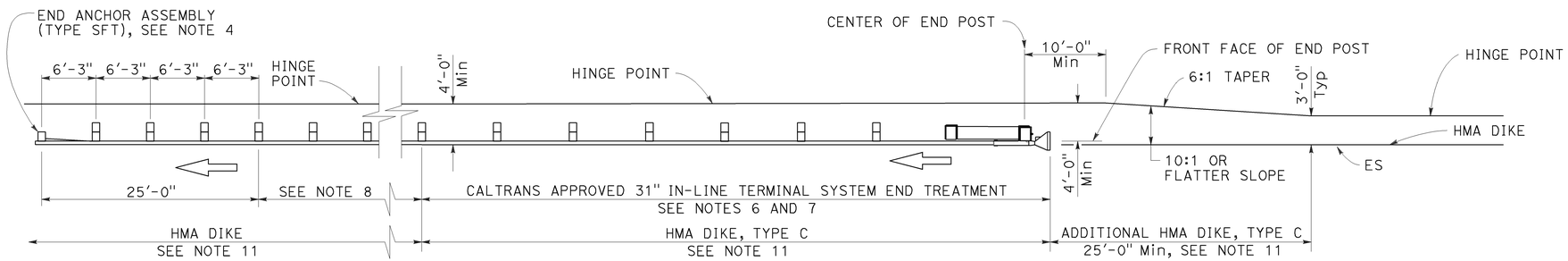

TYPE 11A LAYOUT

(Embankment MGS installation with 31" in-line end treatment at traffic approach end of railing) see Note 5

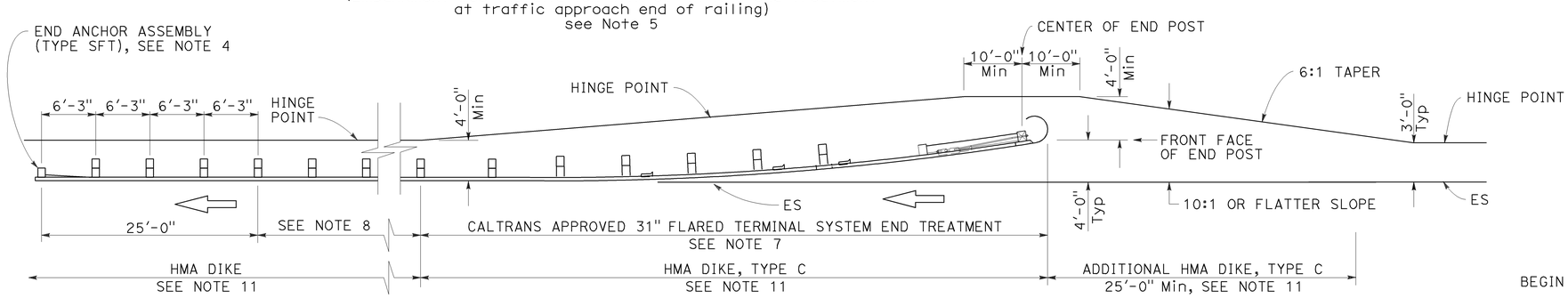

TYPE 11B LAYOUT

(Embankment MGS installation with 31" flared end treatment at traffic approach end of railing) see Note 5

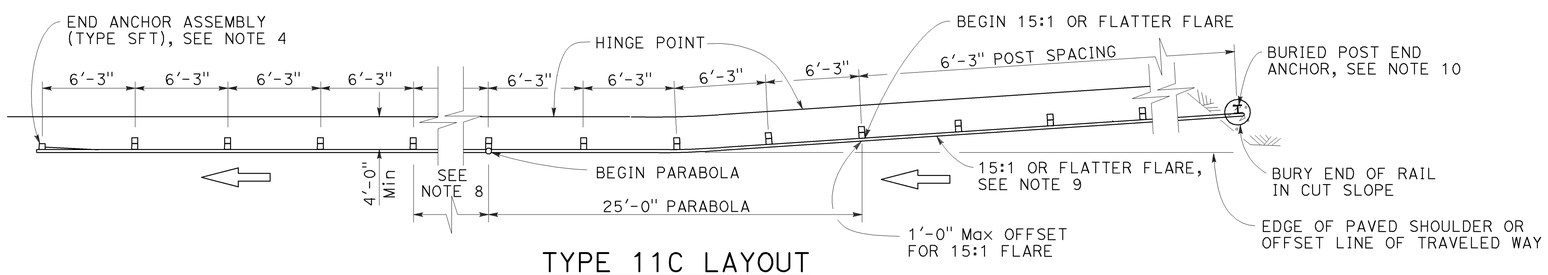

TYPE 11C LAYOUT

(Embankment MGS installation with buried end anchor treatment at traffic approach end of railing) see Notes 5 and 11

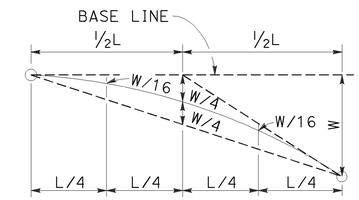

TYPICAL PARABOLIC LAYOUT

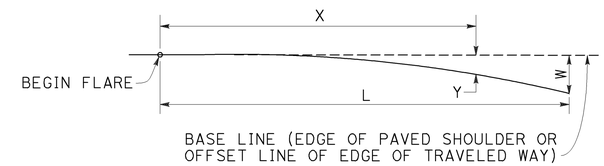

$$Y = \frac{WX^2}{L^2}$$

Y = OFFSET FROM BASE LINE
W = MAXIMUM OFFSET
X = DISTANCE ALONG BASE LINE
L = LENGTH OF FLARE

PARABOLIC FLARE OFFSETS

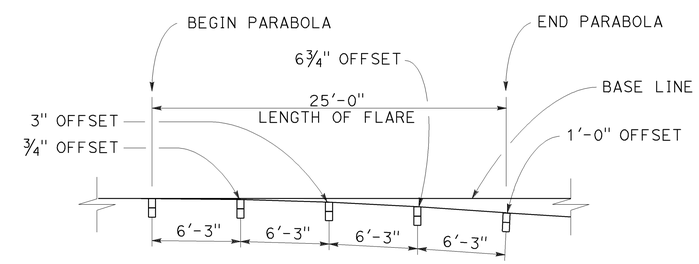

TYPICAL FLARE OFFSETS FOR 1 FOOT Max END OFFSET

NOTES:

1. Line post, blocks and hardware to be used are shown on Revised Standard Plans RSP A77L1, RSP A77L2, RSP A77M1, RSP A77N1 and RSP A77N2.
2. MGS post spacing to be 6'-3" center to center, except as otherwise noted.
3. Except as noted, line posts are 6" x 8" x 6'-0" wood with 6" x 12" x 1'-2" wood blocks. W6 x 8.5 or W6 x 9 steel posts, 6'-0" in length, with 6" x 12" x 1'-2" notched wood blocks or recycled plastic blocks may be used for 6" x 8" x 6'-0" wood post with 6" x 12" x 1'-2" wood blocks where applicable and when specified.
4. For End Anchor Assembly (Type SFT) details, see Revised Standard Plan RSP A77S1.
5. Layout Types 11A, 11B or 11C are typically used where MGS is recommended to shield embankment slopes and a crashworthy end treatment is required for only one direction of traffic.
6. 31" in-line terminal system end treatments are used where site conditions will not accommodate a flared end treatment.
7. The type of 31" terminal system end treatment to be used will be shown on the Project Plans.
8. Dependent on site conditions (embankment height and side slope), construction of additional MGS (length equal to multiples of 12'-6" with 6'-3" post spacing) may be advisable.
9. The 15:1 or flatter flare used with buried end anchors is based on the edge of the paved shoulder or offset line of edge of the traveled way. The length of MGS within the 15:1 or flatter flare is based on site conditions and should be a length equal to multiples of 12'-6".
10. For details of the buried post end anchor used with Type 11C Layout, see Revised Standard Plan RSP A77T2.
11. Where placement of dike is required with MGS installations, see Revised Standard Plan RSP A77N4 for dike positioning details.

STATE OF CALIFORNIA
DEPARTMENT OF TRANSPORTATION

MIDWEST GUARDRAIL SYSTEM TYPICAL LAYOUTS FOR EMBANKMENTS

NO SCALE

RSP A77P1 DATED NOVEMBER 15, 2013 SUPERSEDES RSP A77P1 DATED JULY 19, 2013 THAT SUPPLEMENTS THE STANDARD PLANS BOOK DATED 2010.

REVISED STANDARD PLAN RSP A77P1

10-4-13

Dist	COUNTY	ROUTE	POST MILES TOTAL PROJECT	SHEET No.	TOTAL SHEETS
04	Ala	580	R33.4	56	91

Randell D. Hiatt
REGISTERED CIVIL ENGINEER

July 19, 2013
PLANS APPROVAL DATE

REGISTERED PROFESSIONAL ENGINEER
Randell D. Hiatt
No. C50200
Exp. 6-30-15
CIVIL
STATE OF CALIFORNIA

THE STATE OF CALIFORNIA OR ITS OFFICERS OR AGENTS SHALL NOT BE RESPONSIBLE FOR THE ACCURACY OR COMPLETENESS OF SCANNED COPIES OF THIS PLAN SHEET.

TO ACCOMPANY PLANS DATED 6-22-15

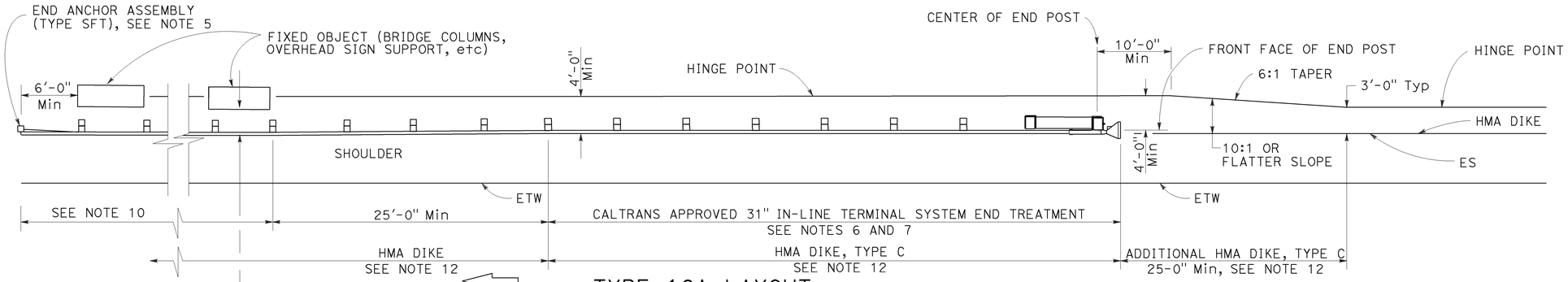

TYPE 16A LAYOUT

(MGS installation at roadside fixed object or objects with 31" in-line end treatment at traffic approach end of railing)
See Notes 11 and 12

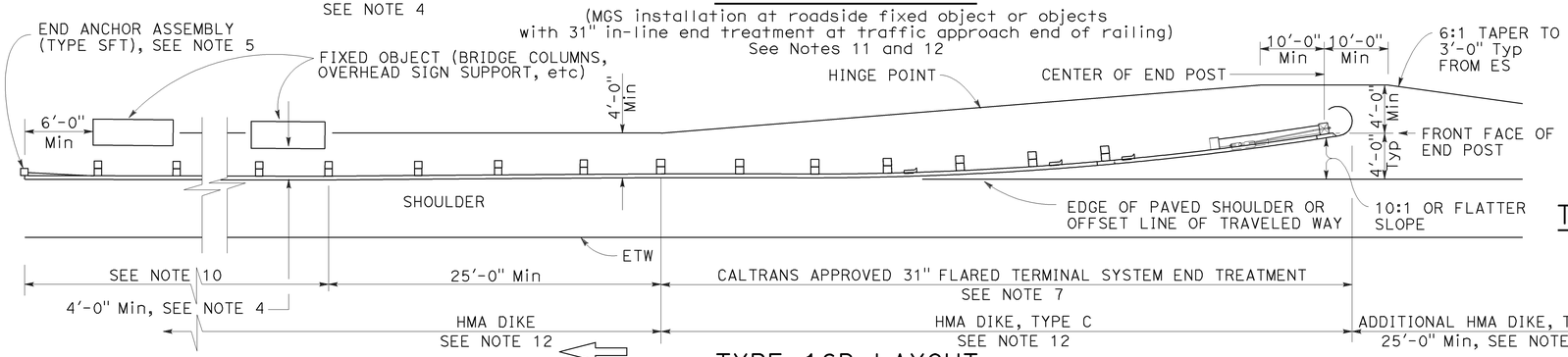

TYPE 16B LAYOUT

(MGS installation at roadside fixed object or objects with 31' flared end treatment at traffic approach end of railing)
See Notes 11 and 12

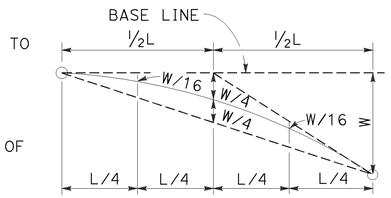

TYPIC AL PARABOLIC LAYOUT

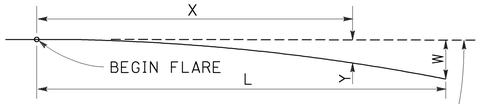

BASE LINE (EDGE OF PAVED SHOULDER OR OFFSET LINE OF EDGE OF TRAVELED WAY)

$$Y = \frac{WX^2}{L^2}$$

Y = OFFSET FROM BASE LINE
W = MAXIMUM OFFSET
X = DISTANCE ALONG BASE LINE
L = LENGTH OF FLARE

PARABOLIC FLARE OFFSETS

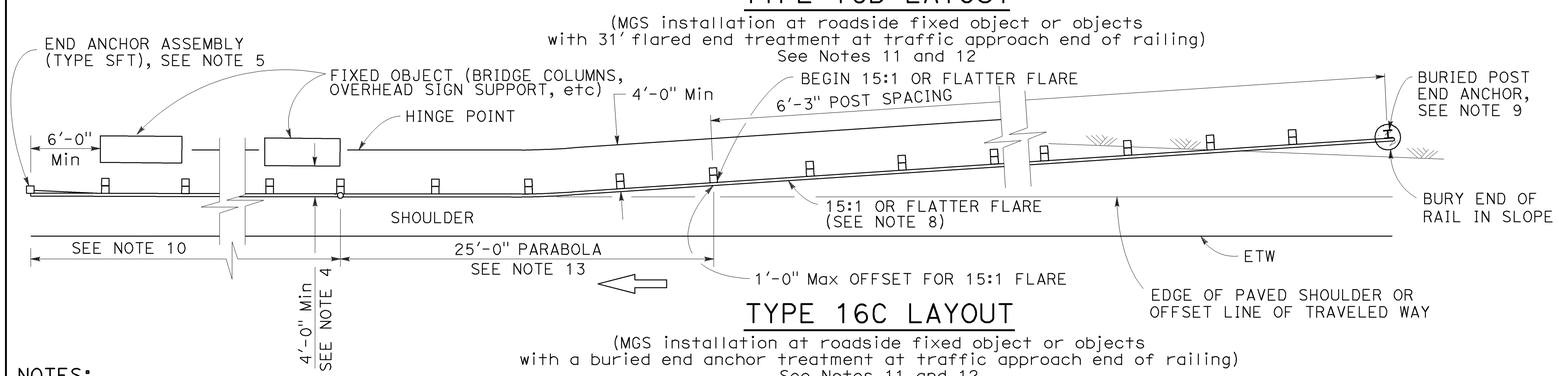

TYPE 16C LAYOUT

(MGS installation at roadside fixed object or objects with a buried end anchor treatment at traffic approach end of railing)
See Notes 11 and 12

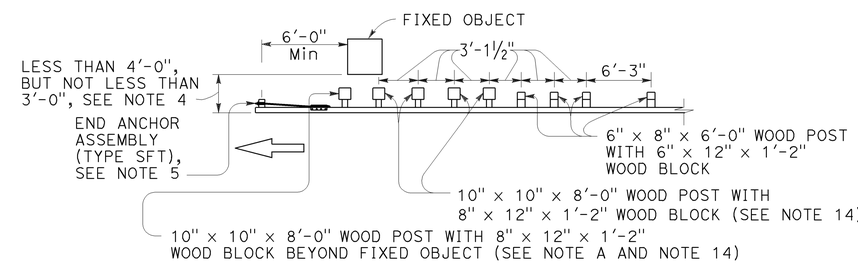

NOTE A: For a series of fixed objects (bridge columns, overhead sign supports, etc.) additional 10" x 10" x 8'-0" wood post with 8" x 12" x 1'-2" wood blocks at 3'-1½" center to center spacing are to be used between fixed objects.

STRENGTHENED MIDWEST GUARDRAIL SYSTEM SECTIONS FOR FIXED OBJECT

Use strengthened MGS sections with Types 16A, 16B or 16C layouts where minimum clearance between the face of the railing and fixed object(s) is less than 4'-0", but not less than 3'-0". See Note 4

NOTES:

1. Line post, blocks and hardware to be used are shown on Revised Standard Plans RSP A77L1, RSP A77L2, RSP A77M1, RSP A77N1 and RSP A77N2.
2. MGS post spacing to be 6'-3" center to center, except as otherwise noted.
3. Except as noted, line posts are 6" x 8" x 6'-0" wood with 6" x 12" x 1'-2" wood blocks. W6 x 8.5 or W6 x 9 steel posts, 6'-0" in length, with 6" x 12" x 1'-2" notched wood blocks or notched recycled plastic blocks may be used for 6" x 8" x 6'-0" wood line posts with 6" x 12" x 1'-2" wood blocks where applicable and when specified.
4. A 4'-0" minimum clearance is required between the face of the railing and the face of a fixed object located directly behind MGS sections with post spacing of 6'-3". Construct MGS as shown in the detail "Strengthened Midwest Guardrail System Sections for Fixed Object" on this plan, where the clearance between the face of the railing and the face of a fixed object is less than 4'-0", but not less than 3'-0". Where the clearance is less than 3'-0", a concrete wall or barrier should be constructed to shield the fixed object(s).
5. For End Anchor Assembly (Type SFT) details, see Revised Standard Plan RSP A77S1.
6. 31" in-line terminal system end treatments are used where site conditions will not accommodate a 31" flared end treatment.
7. The type of 31" terminal system to be used will be shown on the Project Plans.
8. The 15:1 or flatter flare used with Type 16C Layout is based on the edge of the paved shoulder or offset line of edge of the traveled way. The length of MGS within the 15:1 or flatter flare is based on site conditions and should be a length equal to multiples of 12'-6".
9. For details of the Buried Post End Anchor used with Type 16C Layout, see Revised Standard Plan RSP A77T2.
10. As site conditions dictate, construct additional MGS to shield fixed object(s). Additional MGS length equal to multiples of 12'-6". Post spacing at 6'-3" except as specified in Note 4.
11. Layout Types 16A, 16B or 16C are typically used where MGS is recommended to shield roadside fixed object(s) and a crashworthy 31" end treatment is required for only one direction of traffic.
12. Where placement of dike is required with MGS, see Revised Standard Plan RSP A77N4 for dike positioning details.
13. For typical flare offsets for 25'-0" length parabola with maximum offset of 1'-0", see Revised Standard Plan RSP A77P1.
14. W6 x 15 steel post, 8'-0" in length, with 8" x 12" x 1'-2" notched wood block or notched recycled plastic blocks may be used in place of the 10" x 10" x 8'-0" wood post with 8" x 12" x 1'-2" wood block shown in the detail "Strengthened Midwest Guardrail System Sections for Fixed Object".

STATE OF CALIFORNIA
DEPARTMENT OF TRANSPORTATION

MIDWEST GUARDRAIL SYSTEM TYPICAL LAYOUTS FOR ROADSIDE FIXED OBJECTS

NO SCALE

RSP A77R3 DATED JULY 19, 2013 SUPPLEMENTS THE STANDARD PLANS BOOK DATED 2010.

REVISED STANDARD PLAN RSP A77R3

2010 REVISED STANDARD PLAN RSP A77R3

6-20-13

Dist	COUNTY	ROUTE	POST MILES TOTAL PROJECT	SHEET No.	TOTAL SHEETS
04	Ala	580	R33.4	57	91

Randell D. Hiatt
REGISTERED CIVIL ENGINEER

November 15, 2013
PLANS APPROVAL DATE

REGISTERED PROFESSIONAL ENGINEER
Randell D. Hiatt
No. C50200
Exp. 6-30-15
CIVIL
STATE OF CALIFORNIA

THE STATE OF CALIFORNIA OR ITS OFFICERS OR AGENTS SHALL NOT BE RESPONSIBLE FOR THE ACCURACY OR COMPLETENESS OF SCANNED COPIES OF THIS PLAN SHEET.

TO ACCOMPANY PLANS DATED 6-22-15

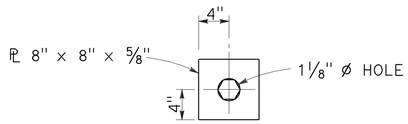

DETAIL "A"
CABLE CONNECTION
END PLATE

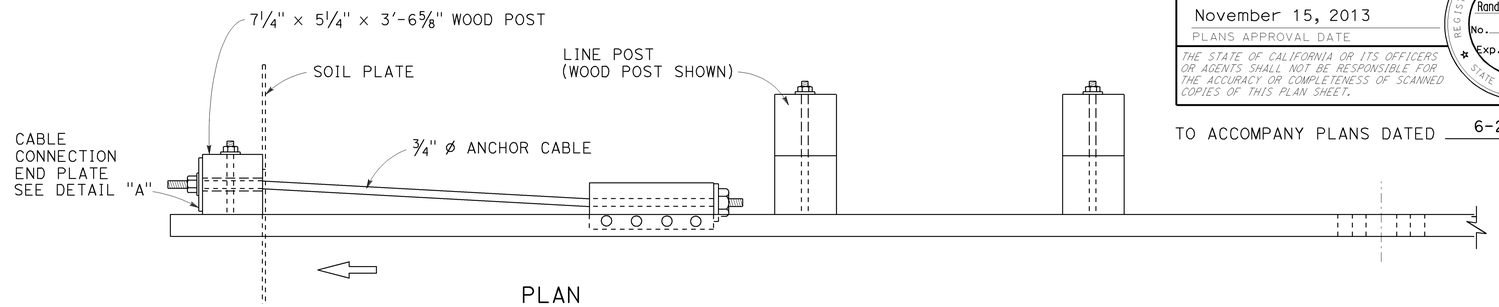

PLAN

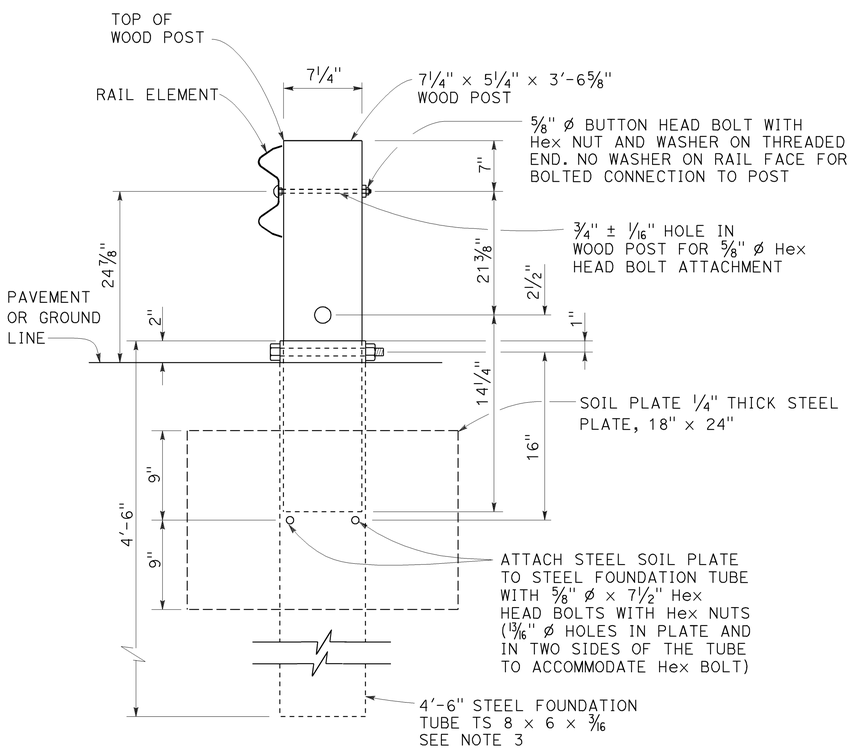

SECTION A-A

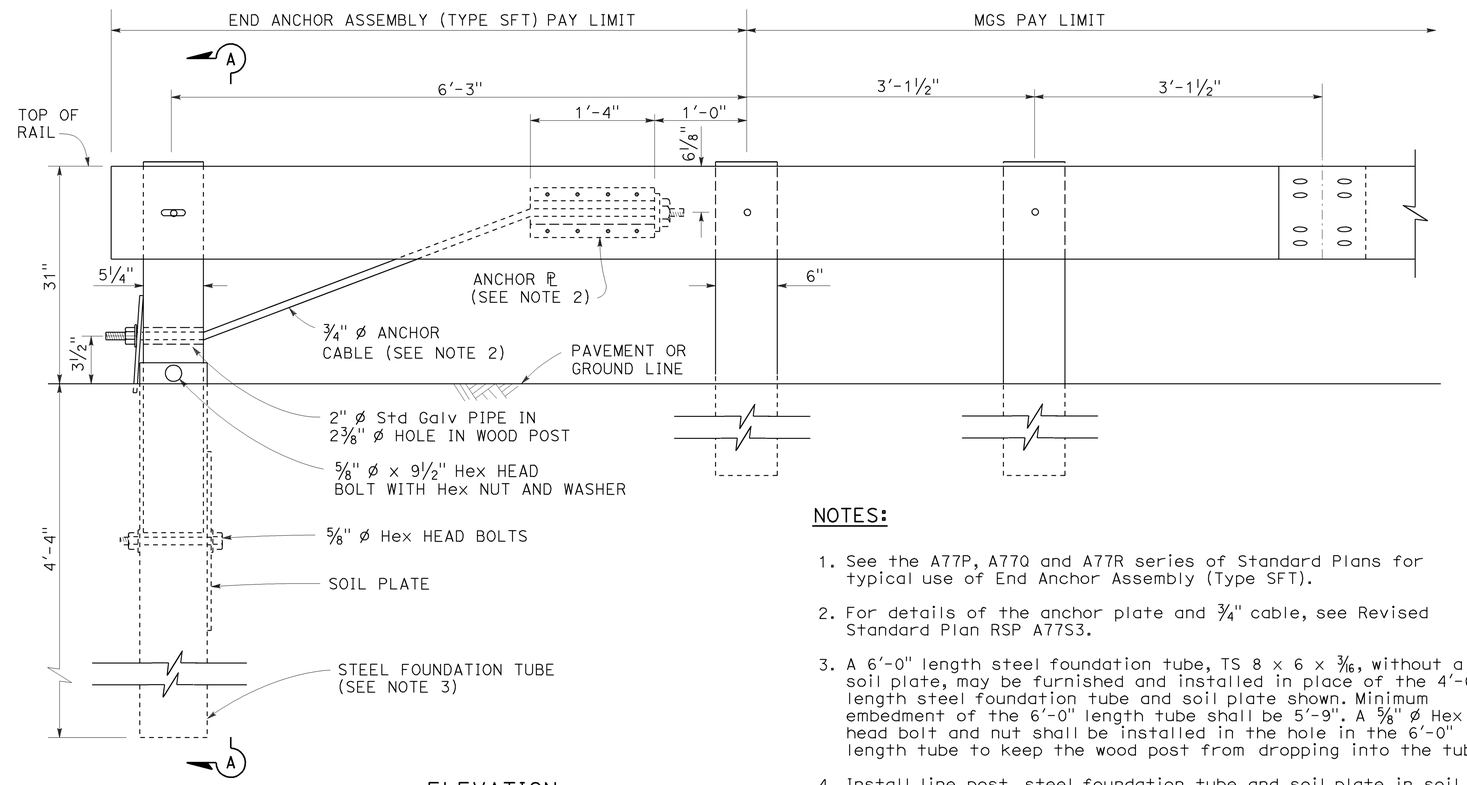

ELEVATION

END ANCHOR
ASSEMBLY (TYPE SFT)
See Note 1

NOTES:

1. See the A77P, A77Q and A77R series of Standard Plans for typical use of End Anchor Assembly (Type SFT).
2. For details of the anchor plate and 3/4" cable, see Revised Standard Plan RSP A77S3.
3. A 6'-0" length steel foundation tube, TS 8 x 6 x 3/16, without a soil plate, may be furnished and installed in place of the 4'-6" length steel foundation tube and soil plate shown. Minimum embedment of the 6'-0" length tube shall be 5'-9". A 5/8" Ø Hex head bolt and nut shall be installed in the hole in the 6'-0" length tube to keep the wood post from dropping into the tube.
4. Install line post, steel foundation tube and soil plate in soil.

STATE OF CALIFORNIA
DEPARTMENT OF TRANSPORTATION

MIDWEST GUARDRAIL SYSTEM END ANCHOR ASSEMBLY (TYPE SFT)

NO SCALE

RSP A77S1 DATED NOVEMBER 15, 2013 SUPERSEDES RSP A77S1
DATED JULY 19, 2013 THAT SUPPLEMENTS THE STANDARD PLANS BOOK DATED 2010.

REVISED STANDARD PLAN RSP A77S1

2010 REVISED STANDARD PLAN RSP A77S1

10-4-13

Dist	COUNTY	ROUTE	POST MILES TOTAL PROJECT	SHEET No.	TOTAL SHEETS
04	Ala	580	R33.4	58	91

Randell D. Hiatt
REGISTERED CIVIL ENGINEER

November 15, 2013
PLANS APPROVAL DATE

REGISTERED PROFESSIONAL ENGINEER
Randell D. Hiatt
No. C50200
Exp. 6-30-15
CIVIL
STATE OF CALIFORNIA

THE STATE OF CALIFORNIA OR ITS OFFICERS OR AGENTS SHALL NOT BE RESPONSIBLE FOR THE ACCURACY OR COMPLETENESS OF SCANNED COPIES OF THIS PLAN SHEET.

TO ACCOMPANY PLANS DATED 6-22-15

2010 REVISED STANDARD PLAN RSP A77S3

NOTE:

See Revised Standard Plans RSP A77S1, RSP A77S2 and RSP A77T1 for typical use of anchor cable and anchor plate.

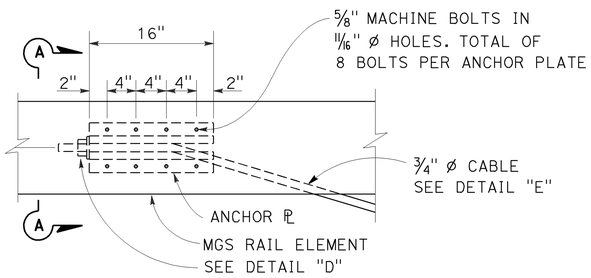

ANCHOR PLATE DETAIL
(MGS shown, TBB similar)

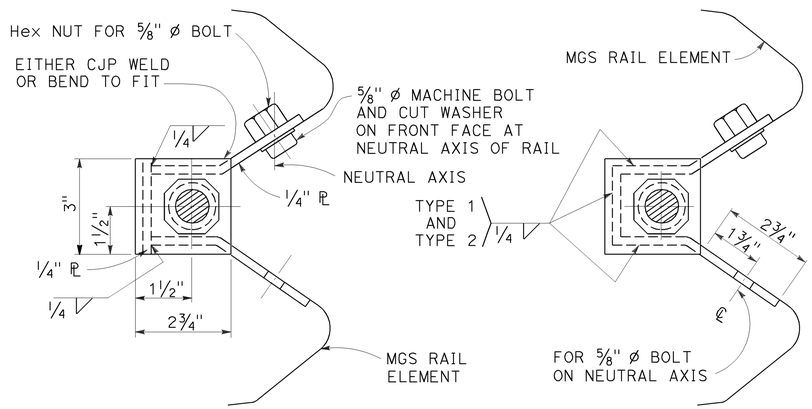

NOTE:
Dimensioning applies to both types.

SECTION A-A
(ALTERNATIVE TYPE 1)

SECTION A-A
(ALTERNATIVE TYPE 2)

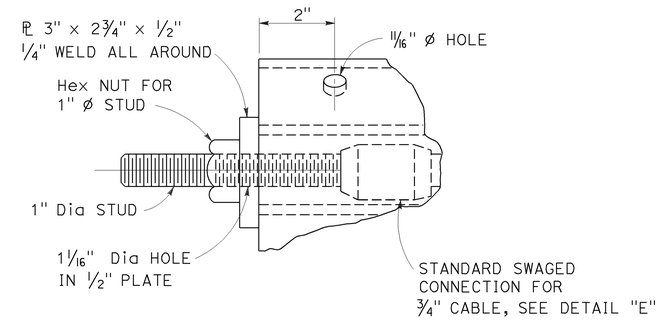

DETAIL "D"

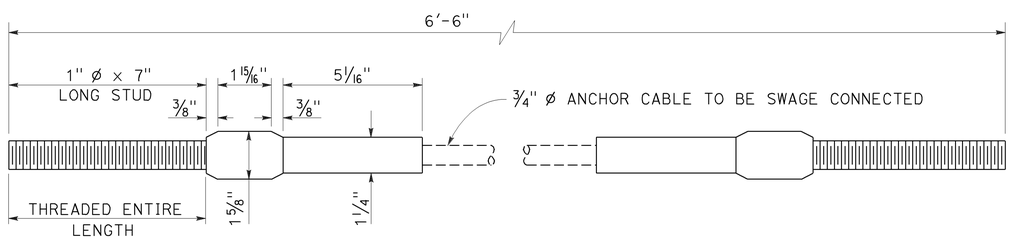

ANCHOR CABLE WITH
SWAGED FITTING AND STUD
DETAIL "E"

STATE OF CALIFORNIA
DEPARTMENT OF TRANSPORTATION

METAL RAILING ANCHOR CABLE AND ANCHOR PLATE DETAILS

NO SCALE

RSP A77S3 DATED NOVEMBER 15, 2013 SUPERSEDES RSP A77S3
DATED JULY 19, 2013 THAT SUPPLEMENTS THE STANDARD PLANS BOOK DATED 2010.

REVISED STANDARD PLAN RSP A77S3

10-4-13

Dist	COUNTY	ROUTE	POST MILES TOTAL PROJECT	SHEET No.	TOTAL SHEETS
04	Ala	580	R33.4	59	91

REGISTERED CIVIL ENGINEER

July 19, 2013
PLANS APPROVAL DATE

REGISTERED PROFESSIONAL ENGINEER Michael Janzen No. 44788 Exp. 03-31-14 CIVIL STATE OF CALIFORNIA

THE STATE OF CALIFORNIA OR ITS OFFICERS OR AGENTS SHALL NOT BE RESPONSIBLE FOR THE ACCURACY OR COMPLETENESS OF SCANNED COPIES OF THIS PLAN SHEET.

TO ACCOMPANY PLANS DATED 6-22-15

2010 REVISED STANDARD PLAN RSP A87A

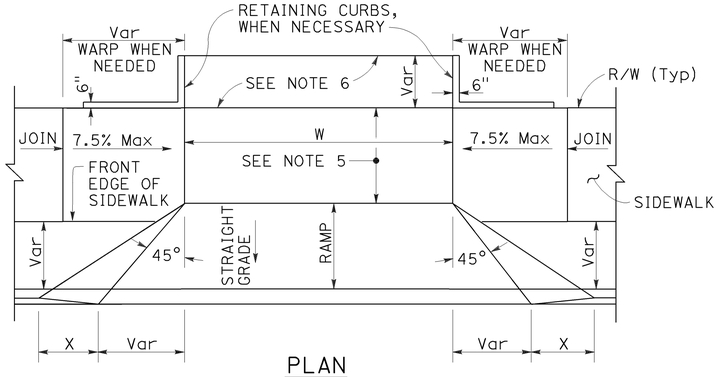

PLAN

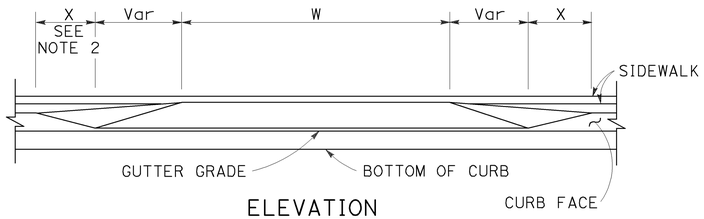

ELEVATION

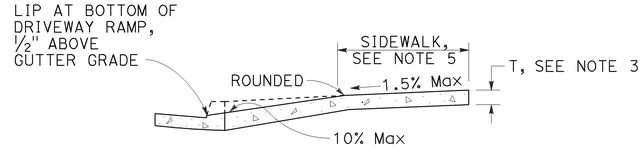

CASE A

Typical driveway, sidewalk not depressed

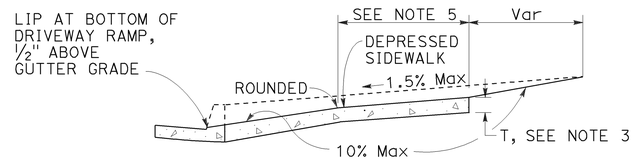

CASE B

Driveway with depressed sidewalk

SECTIONS

DRIVEWAYS

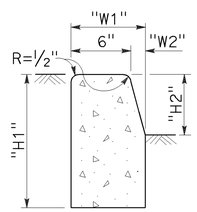

TYPE A1 CURBS

See Table A

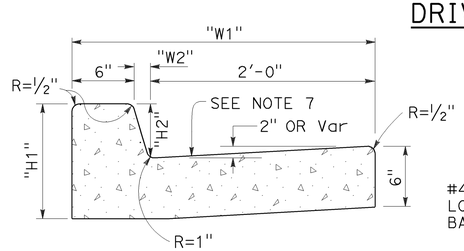

TYPE A2 CURBS

See Table A

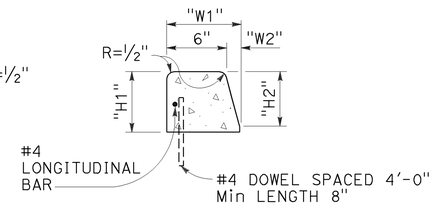

TYPE A3 CURBS

Superimposed on existing pavement
See Table A

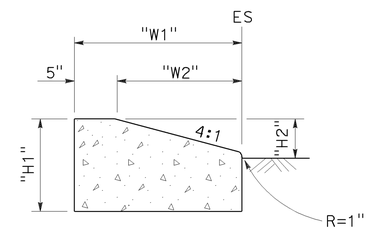

TYPE D CURBS

See Table A

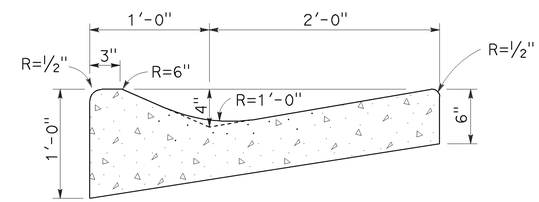

TYPE E CURB

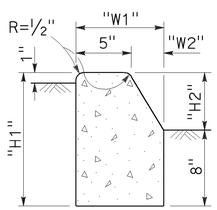

TYPE B1 CURBS

See Table A

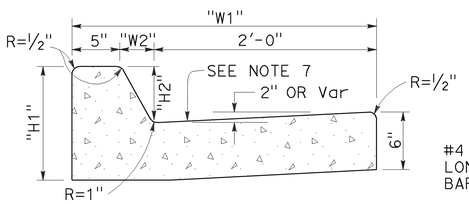

TYPE B2 CURBS

See Table A

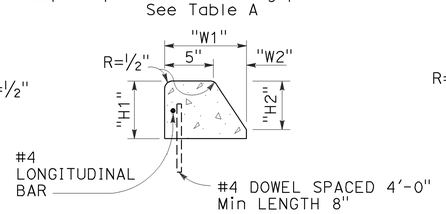

TYPE B3 CURBS

Superimposed on existing pavement
See Table A

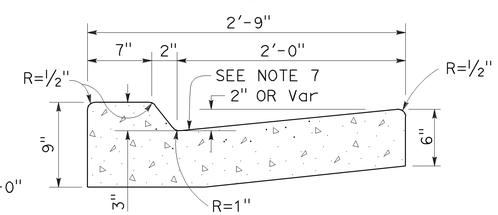

TYPE B4 CURBS

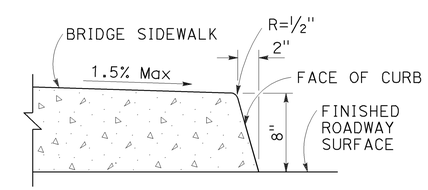

TYPE H CURB

On Bridges

CURBS

TABLE A

CURB TYPE	DIMENSIONS			
	"H1"	"H2"	"W1"	"W2"
A1-6	1'-2"	6"	7½"	1½"
A1-8	1'-4"	8"	8"	2"
A2-6	1'-0"	6"	2'-7½"	1½"
A2-8	1'-2"	8"	2'-8"	2"
A3-6	6"	5"	7¼"	1¼"
A3-8	8"	7"	7¾"	1¾"
B1-4	1'-0"	4"	7½"	2½"
B1-6	1'-2"	6"	9"	4"
B2-4	10"	4"	2'-7½"	2½"
B2-6	1'-0"	6"	2'-9"	4"
B3-4	4"	3"	7"	2"
B3-6	6"	5"	8½"	3½"
D-4	10"	4"	1'-6"	1'-1"
D-6	1'-0"	6"	2'-2"	1'-9"

CURB QUANTITIES

TYPE	CUBIC YARDS PER LINEAR FOOT
A1-6	0.02585
A1-8	0.03084
A2-6	0.05903
A2-8	0.06379
A3-6	0.01036
A3-8	0.01435
B1-4	0.02185
B1-6	0.02930
B2-4	0.05515
B2-6	0.06171
B3-4	0.00641
B3-6	0.01074
B4	0.05709
D-4	0.04083
D-6	0.06804
E	0.06661

NOTES:

1. Case A driveway section typically applies.
2. X=3'-0" except for curb heights over 10" where 4:1 slopes shall be used on curb slope.
3. Sidewalk and ramp thickness "T" at driveway shall be 4" for residental and 6" for commercial.
4. Difference in slope of the driveway ramp and the slope of a line between the gutter and a point on the roadway 5'-0" from gutter line shall not exceed 15%. Reduce driveway ramp slope, not gutter slope, where required.
5. Minimum width of clear passageway for sidewalk shall be 4'-2".
6. Retaining curbs and acquisition of construction easement may be necessary for narrow sidewalks or curb heights in excess of 6".
7. Across the pedestrian route at curb ramp locations, the gutter pan slope shall not exceed 1" of depth for each 2'-0" of width.

STATE OF CALIFORNIA
DEPARTMENT OF TRANSPORTATION

CURBS AND DRIVEWAYS

NO SCALE

RSP A87A DATED JULY 19, 2013 SUPERSEDES STANDARD PLAN A87A
DATED MAY 20, 2011 - PAGE 119 OF THE STANDARD PLANS BOOK DATED 2010.

REVISED STANDARD PLAN RSP A87A

7-8-13

Dist	COUNTY	ROUTE	POST MILES TOTAL PROJECT	SHEET No.	TOTAL SHEETS
04	Ala	580	R33.4	60	91

REGISTERED CIVIL ENGINEER

July 19, 2013
PLANS APPROVAL DATE

REGISTERED PROFESSIONAL ENGINEER
Michael Janzen
No. 44788
Exp. 03-31-14
CIVIL
STATE OF CALIFORNIA

THE STATE OF CALIFORNIA OR ITS OFFICERS OR AGENTS SHALL NOT BE RESPONSIBLE FOR THE ACCURACY OR COMPLETENESS OF SCANNED COPIES OF THIS PLAN SHEET.

TO ACCOMPANY PLANS DATED 6-22-15

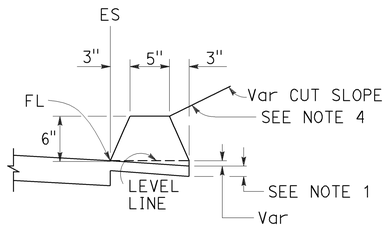

TYPE A
See Note 3

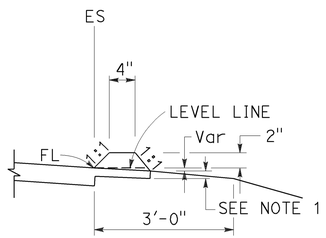

TYPE C

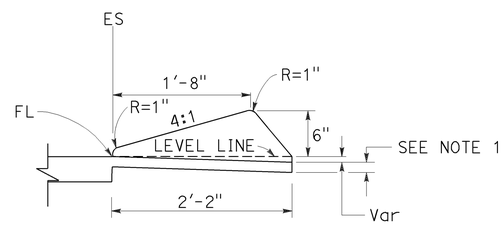

TYPE D

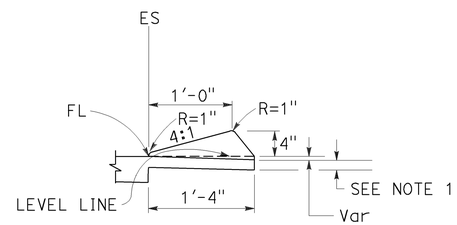

TYPE E

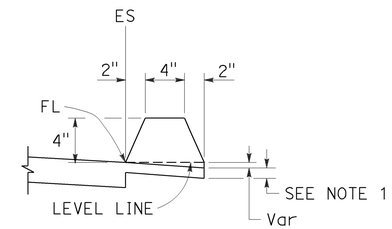

TYPE F
See Note 5

DIKES

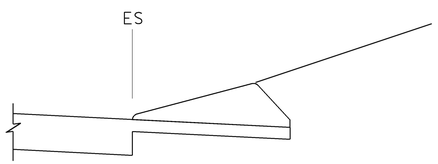

CASE C-1
Cut Slope

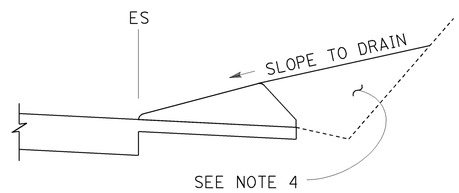

CASE C-2
Cut Slope

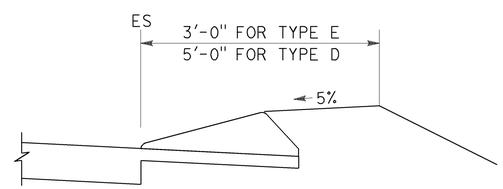

CASE F

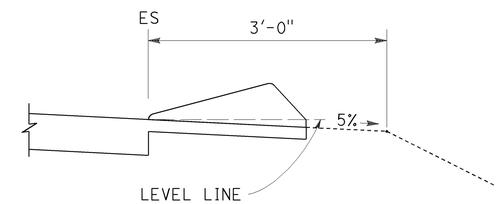

CASE R
See Note 2

TYPE D AND E BACKFILL DETAILS

NOTES:

1. For HMA shoulders only, extend top layer of HMA placed on the shoulder under dike with no joint at the ES. For projects with OGFC shoulders, do not extend OGFC under dike. See project plans for modified dike detail.
2. Case R applies to retrofit only projects where restrictive conditions do not provide enough width for Case F backfill.
3. Type A dike only to be used where restrictive slope conditions do not provide enough width to use Type D or Type E dike.
4. Fill and compact with excavated material to top of dike.
5. Use Type F dike, where dike is required with guard railing installations. See Revised Standard Plan RSP A77N4 for dike positioning details.

DIKE QUANTITIES

TYPE	CUBIC YARDS PER LINEAR FOOT
A	0.0135
C	0.0038
D	0.0293
E	0.0130
F	0.0066

Quantities based on 5% cross slope.

STATE OF CALIFORNIA
DEPARTMENT OF TRANSPORTATION

HOT MIX ASPHALT DIKES

NO SCALE

RSP A87B DATED JULY 19, 2013 SUPERSEDES STANDARD PLAN A87B DATED MAY 20, 2011 - PAGE 120 OF THE STANDARD PLANS BOOK DATED 2010.

REVISED STANDARD PLAN RSP A87B

2010 REVISED STANDARD PLAN RSP A87B

6-27-13

DIST	COUNTY	ROUTE	POST MILES TOTAL PROJECT	SHEET No.	TOTAL SHEETS
04	Ala	580	R33.4	61	91

REGISTERED CIVIL ENGINEER

November 15, 2013
PLANS APPROVAL DATE

REGISTERED PROFESSIONAL ENGINEER
Cornelis M. Hakim
No. C55610
Exp. 12-31-14
CIVIL
STATE OF CALIFORNIA

THE STATE OF CALIFORNIA OR ITS OFFICERS OR AGENTS SHALL NOT BE RESPONSIBLE FOR THE ACCURACY OR COMPLETENESS OF SCANNED COPIES OF THIS PLAN SHEET.

TO ACCOMPANY PLANS DATED 6-22-15

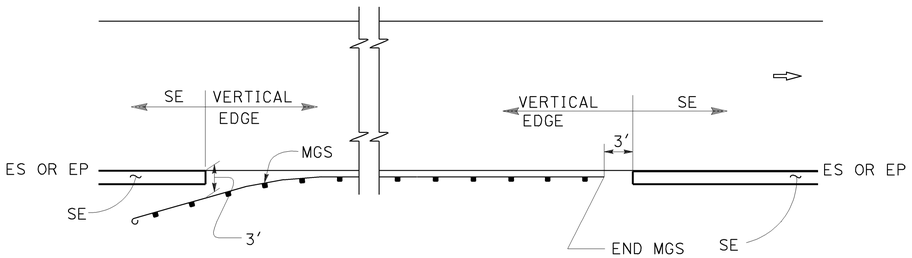

MGS

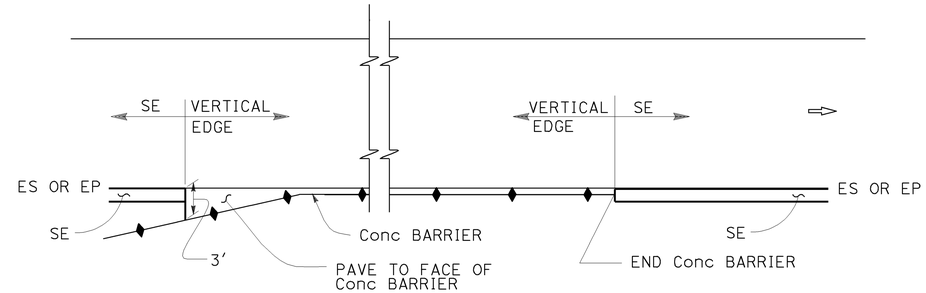

CONCRETE BARRIER

ABBREVIATIONS:

SE SAFETY EDGE

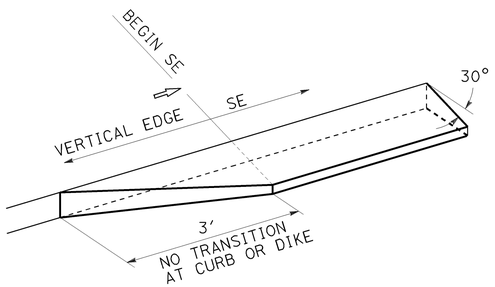

TRANSITION DETAIL FOR CONCRETE ONLY

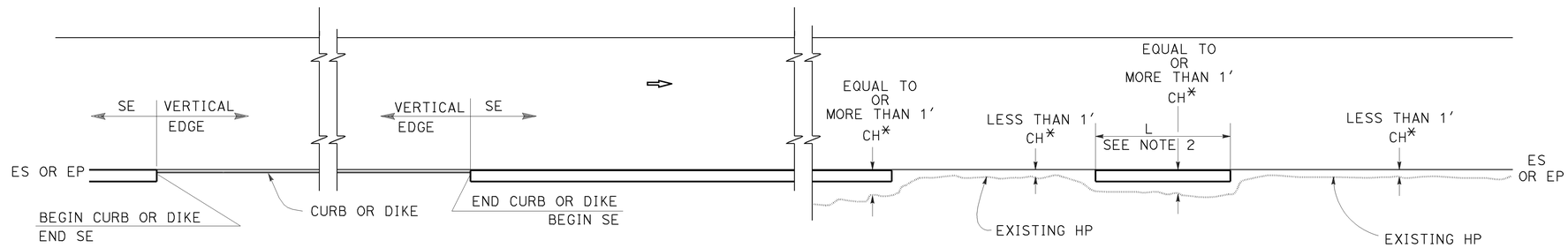

CURB OR DIKE

NARROW SIDE SLOPE

* CH = Distance from ES or EP to existing HP.

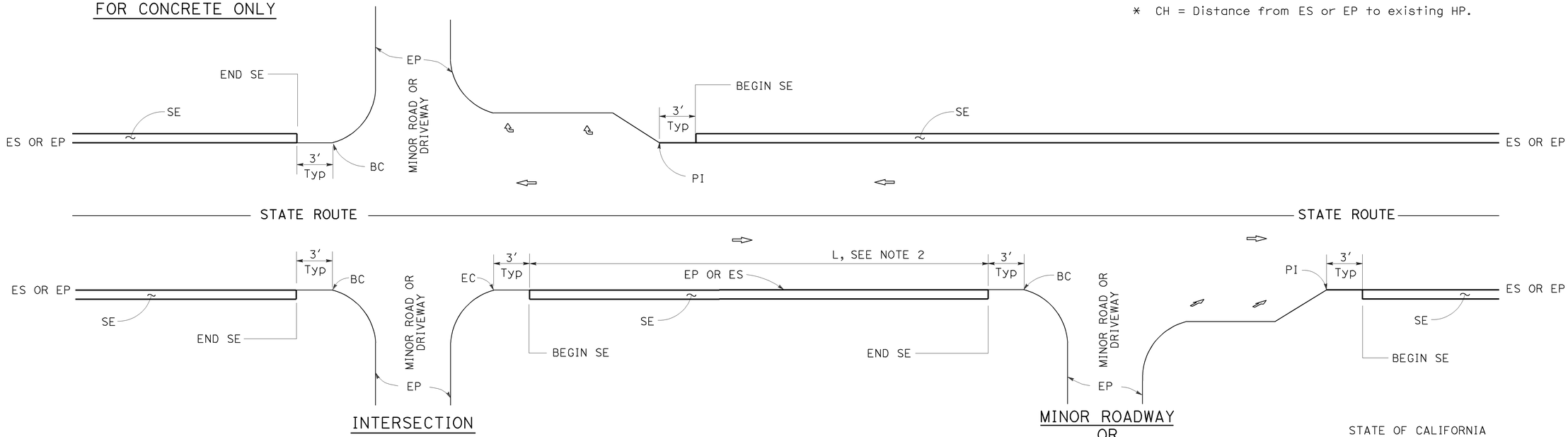

INTERSECTION

DRIVEWAY AND INTERSECTION

MINOR ROADWAY OR DRIVEWAY

NOTES:

1. For details not shown, see Revised Standard Plans RSP P75 and RSP P76.
2. Safety edge is optional when L is less than 30′.

STATE OF CALIFORNIA
DEPARTMENT OF TRANSPORTATION

PAVEMENT EDGE TREATMENTS

NO SCALE

RSP P74 DATED NOVEMBER 15, 2013 SUPERSEDES RSP P74 DATED JANUARY 20, 2012 THAT SUPPLEMENTS THE STANDARD PLANS BOOK DATED 2010.

REVISED STANDARD PLAN RSP P74

2010 REVISED STANDARD PLAN RSP P74

10-11-13

DIST	COUNTY	ROUTE	POST MILES TOTAL PROJECT	SHEET No.	TOTAL SHEETS
04	Ala	580	R33.4	62	91

REGISTERED CIVIL ENGINEER

November 15, 2013
PLANS APPROVAL DATE

REGISTERED PROFESSIONAL ENGINEER Cornelis M. Hakim No. C55610 Exp. 12-31-14 CIVIL STATE OF CALIFORNIA

THE STATE OF CALIFORNIA OR ITS OFFICERS OR AGENTS SHALL NOT BE RESPONSIBLE FOR THE ACCURACY OR COMPLETENESS OF SCANNED COPIES OF THIS PLAN SHEET.

TO ACCOMPANY PLANS DATED 6-22-15

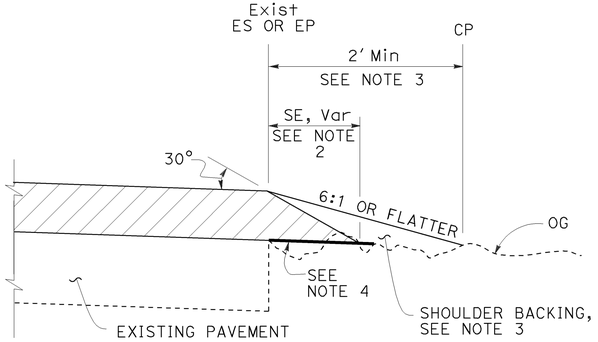

CASE A
Safety Edge

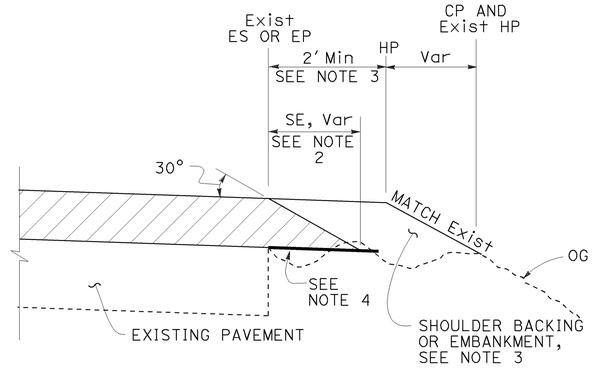

CASE B
Safety Edge

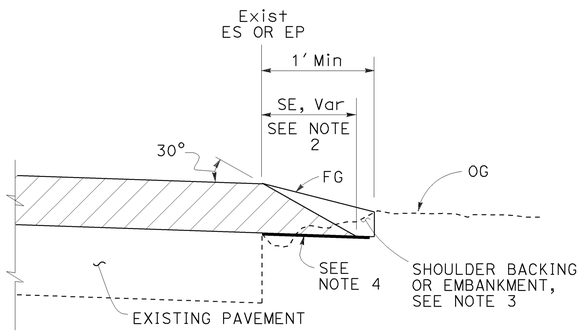

CASE C
Safety Edge

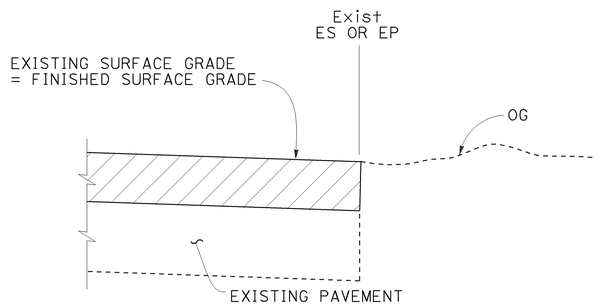

CASE D
Vertical Edge

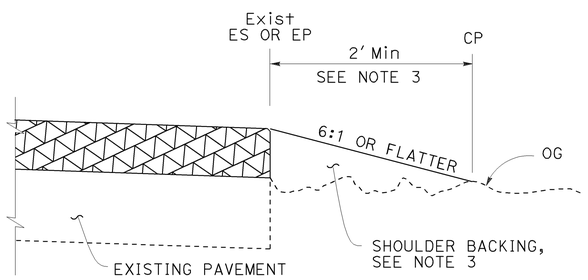

CASE E
Vertical Edge

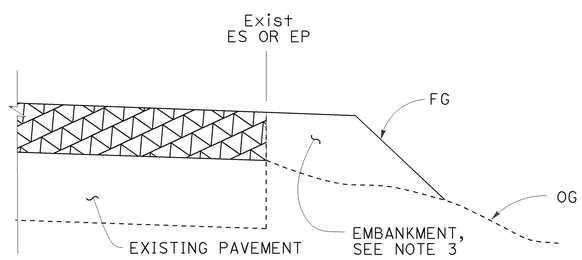

CASE F
Vertical Edge
* See Table A and Revised Std Plan RSP P74

LEGEND:

- HMA OVERLAY
- HMA OR CONCRETE OVERLAY
- CONCRETE OVERLAY

ABBREVIATIONS:

SE SAFETY EDGE
TT TOTAL THICKNESS OF SE

TABLE A
EDGE TREATMENT FOR VARIOUS OVERLAY THICKNESS AND CONDITIONS

	OVERLAY THICKNESS	
FIELD CONDITION	LESS THAN 0.15′	0.15′ OR MORE
Exist SLOPE 6:1 OR FLATTER	CASE E	CASE A
Exist SLOPE 3:1 TO 6:1	CASE E	CASE B
Exist SLOPE STEEPER THAN 3:1	CASE F	CASE F
CUT SECTION (REPLACE, COLD PLANE, MILL PAVEMENT)	CASE D	CASE C

ADDITIONAL HMA OR CONCRETE QUANTITIES FOR SE/SIDE/MILE

TYPICAL CROSS SECTION	TT	TOTAL ADDITIONAL MATERIAL FOR SE/SIDE/MILE		
		HMA (TON)	CONCRETE (CY)*	CONCRETE (CY)**
TT	0.15′	NA	NA	NA
	0.20′	13.7	NA	NA
	0.30′	30.9	NA	NA
	0.40′	54.9	NA	NA
	0.45′	69.4	NA	NA
TT 0.43′	0.50′	84.2	NA	NA
	0.60′	113.9	NA	NA
	0.70′	143.6	70.9	94.2
	0.80′	173.3	85.6	112.2
	0.90′	203.0	100.3	130.2
	1.00′	232.7	114.9	148.2
	1.10′	262.4	129.6	166.2
	1.20′	292.1	144.3	184.2

* For Detail "A"
** For Optional Detail "A"

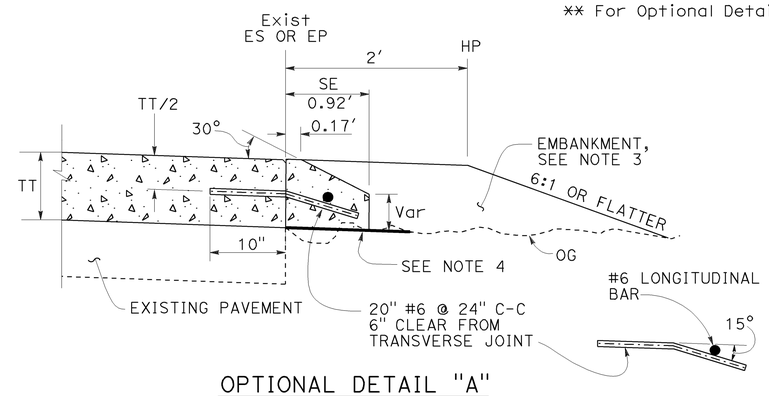

OPTIONAL DETAIL "A"
For concrete overlay
See Note 5

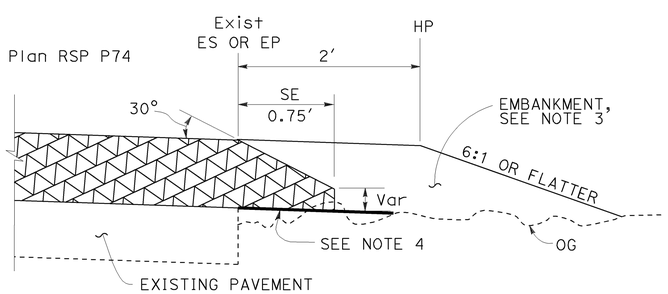

DETAIL "A"
For HMA overlay thickness more than 0.43′ or concrete overlay

NOTES:

1. For limits of safety edge and vertical edge treatments, see Revised Standard Plan RSP P74.
2. Details shown for HMA overlay thickness less than 0.43′. See Detail "A" for HMA overlay thickness more than 0.43′ or concrete overlay.
3. For locations and limits of shoulder backing or embankment see project plans.
4. Grade existing ground to place safety edge. 1′ minimum width
5. Safety edge transverse joint must match overlay transverse joint. End of #6 longitudinal bar must be 2" ±½" clear from transverse joint.
6. Safety edge is not needed in the area of MGS, barrier, right turn lane and acceleration lane. See Revised Standard Plan RSP P74.

STATE OF CALIFORNIA
DEPARTMENT OF TRANSPORTATION

PAVEMENT EDGE TREATMENTS-OVERLAYS

NO SCALE

RSP P75 DATED NOVEMBER 15, 2013 SUPERSEDES RSP P75 DATED JANUARY 20, 2012 THAT SUPPLEMENTS THE STANDARD PLANS BOOK DATED 2010.

REVISED STANDARD PLAN RSP P75

2010 REVISED STANDARD PLAN RSP P75

10-4-13

Dist	COUNTY	ROUTE	POST MILES TOTAL PROJECT	SHEET No.	TOTAL SHEETS
04	Ala	580	R33.4	63	91

LICENSED LANDSCAPE ARCHITECT

July 19, 2013
PLANS APPROVAL DATE

THE STATE OF CALIFORNIA OR ITS OFFICERS OR AGENTS SHALL NOT BE RESPONSIBLE FOR THE ACCURACY OR COMPLETENESS OF SCANNED COPIES OF THIS PLAN SHEET.

LICENSED LANDSCAPE ARCHITECT — Gregory A. Balzer — 2516 — 02-28-15 Renewal Date — 7-19-13 Date — STATE OF CALIFORNIA

TO ACCOMPANY PLANS DATED 6-22-15

A

AB	AGGREGATE BASE
ABS	ACRYLONITRILE-BUTADIENE-STYRENE
AC	ASPHALT CONCRETE
ACC	ARMOR-CLAD CONDUCTORS
Adj	ADJACENT/ADJUSTABLE
AIC	AUXILIARY IRRIGATION CONTROLLER
Alt	ALTERNATIVE
AMEND	AMENDMENT
ARV	AIR RELEASE VALVE
AUTO	AUTOMATIC
AUX	AUXILIARY
AVB	ATMOSPHERIC VACUUM BREAKER

B

B&B	BALLED AND BURLAPPED
B/B	BRASS/BRONZE
B/B/PL	BRASS/BRONZE/PLASTIC
B/PL	BRASS/PLASTIC
BFM	BONDED FIBER MATRIX
Bit Ctd	BITUMINOUS COATED
BP	BOOSTER PUMP
BPA	BACKFLOW PREVENTER ASSEMBLY
BPE	BACKFLOW PREVENTER ENCLOSURE
BV	BALL VALVE

C

C	CONDUIT
CAP	CORRUGATED ALUMINUM PIPE
CARV	COMBINATION AIR RELEASE VALVE
CB	COUPLING BAND
CCA	CAM COUPLER ASSEMBLY
CEC	CONTROLLER ENCLOSURE CABINET
CHDPE	CORRUGATED HIGH DENSITY POLYETHYLENE
CL	CHAIN LINK
CNC	CONTROL AND NEUTRAL CONDUCTORS
Conc	CONCRETE
CP	COPPER PIPE
CS	COMPOST SOCK
CSP	CORRUGATED STEEL PIPE
CST	CENTER STRIP
CV	CHECK VALVE

D

Dia	DIAMETER
DIP	DUCTILE IRON PIPE
DIT	DRIP IRRIGATION TUBING
DG	DECOMPOSED GRANITE
DN	DIAMETER NOMINAL
DVA	DRIP VALVE ASSEMBLY

E

EC	EROSION CONTROL
ECTC	EROSION CONTROL TECHNOLOGY COUNCIL
Elect	ELECTRIC/ELECTRICAL
Elev	ELEVATION
ELL	ELBOW
ENCL	ENCLOSURE
EP	EDGE OF PAVEMENT
ES	EDGE OF SHOULDER
EST	END STRIP
ESTB	ESTABLISHMENT
ETW	EDGE OF TRAVELED WAY

F

F	FULL CIRCLE
F/P	FULL/PART CIRCLE
FCV	FLOW CONTROL VALVE
FERT	FERTILIZER
FG	FINISHED GRADE
FH	FLEXIBLE HOSE
FIPT	FEMALE IRON PIPE THREAD
FIS	FERTILIZER INJECTOR SYSTEM
FL	FLOW LINE
FR	FIBER ROLL
FS	FLOW SENSOR
FSC	FLOW SENSOR CABLE
FV	FLUSH VALVE

G

Galv	GALVANIZED
GARV	GARDEN VALVE
GARVA	GARDEN VALVE ASSEMBLY
GM	GRAVEL MULCH
GPH	GALLONS PER HOUR
GPM	GALLONS PER MINUTE
GSP	GALVANIZED STEEL PIPE
GV	GATE VALVE

H

H	HALF CIRCLE
HDPE	HIGH DENSITY POLYETHYLENE
HP	HORSEPOWER/HINGE POINT
HPL	HIGH PRESSURE LINE
Hwy	HIGHWAY

I

IC	IRRIGATION CONTROLLER
ICC	IRRIGATION CONTROLLER(S) IN CONTROLLER ENCLOSURE CABINET
ID	INSIDE DIAMETER
IFS	IRRIGATION FILTRATION SYSTEM
IPS	IRON PIPE SIZE
IPT	IRON PIPE THREAD
Irr	IRRIGATION

L

L	LENGTH

M

Max	MAXIMUM
MBGR	METAL BEAM GUARD RAILING
MCV	MANUAL CONTROL VALVE
MIC	MASTER IRRIGATION CONTROLLER
Min	MINIMUM
MIPT	MALE IRON PIPE THREAD
Misc	MISCELLANEOUS
Mtl	MATERIAL
MVP	MAINTENANCE VEHICLE PULLOUT

N

NCN	NO COMMON NAME
NL	NOZZLE LINE
No.	NUMBER
NPT	NATIONAL PIPE THREAD

O

O/C	ON CENTER
OD	OUTSIDE DIAMETER
OL	OVERLAP

P

P	PART CIRCLE
PB	PULL BOX
PCC	PORTLAND CEMENT CONCRETE
PE	POLYETHYLENE
Pkt	PACKET
PL	PLASTIC
PLS	PURE LIVE SEED
PLT	PLANT/PLANTING
PLT ESTB	PLANT ESTABLISHMENT
PM	POST MILE
PR	PRESSURE RATED
PRLV	PRESSURE RELIEF VALVE
PRV	PRESSURE REGULATING VALVE
PVC	POLYVINYL CHLORIDE
Pvmt	PAVEMENT

Q

Q	QUARTER CIRCLE
QCV	QUICK COUPLING VALVE

R

R	RADIUS
RCP	REINFORCED CONCRETE PIPE
RCV	REMOTE CONTROL VALVE
RCVM	REMOTE CONTROL VALVE (MASTER)
RCVMF	REMOTE CONTROL VALVE (MASTER) W/FLOW SENSOR
RCVP	REMOTE CONTROL VALVE W/PRESSURE REGULATOR
RCW	RECYCLED WATER
RECP	ROLLED EROSION CONTROL PRODUCT
REQ	REQUIRED
RICS	REMOTE IRRIGATION CONTROL SYSTEM
R/W	RIGHT OF WAY

S

S	SLIP
SCH	SCHEDULE
SF	STATE-FURNISHED
Shld	SHOULDER
Sq	SQUARE
SST	SIDE STRIP
Sta	STATION
Std	STANDARD
SW	SIDEWALK/SOUND WALL

T

T	THIRD CIRCLE/THREAD
TLS	TRUCK LOADING STANDPIPE
TQ	THREE QUARTER CIRCLE
TRM	TURF REINFORCEMENT MAT
TT	TWO-THIRDS CIRCLE
TWSA	TREE WELL SPRINKLER ASSEMBLY
Typ	TYPICAL

U

UG	UNDERGROUND

W

W	WIDTH
W/	WITH
WM	WATER METER
WS	WYE STRAINER
WSA	WYE STRAINER ASSEMBLY
WSP	WELDED STEEL PIPE
WWM	WELDED WIRE MESH

NOTE:
For additional abbreviations, see Standard Plans A10A and A10B.

STATE OF CALIFORNIA
DEPARTMENT OF TRANSPORTATION

LANDSCAPE AND EROSION CONTROL ABBREVIATIONS

NO SCALE

RSP H1 DATED JULY 19, 2013 SUPERSEDES STANDARD PLAN H1 DATED MAY 20, 2011 - PAGE 218 OF THE STANDARD PLANS BOOK DATED 2010.

REVISED STANDARD PLAN RSP H1

2010 REVISED STANDARD PLAN RSP H1

6-28-13

Dist	COUNTY	ROUTE	POST MILES TOTAL PROJECT	SHEET No.	TOTAL SHEETS
04	Ala	580	R33.4	64	91

LICENSED LANDSCAPE ARCHITECT

November 15, 2013
PLANS APPROVAL DATE

Gregory A. Balzer 2576 — 02-28-15 Renewal Date — 11-15-13 Date — LICENSED LANDSCAPE ARCHITECT — STATE OF CALIFORNIA

THE STATE OF CALIFORNIA OR ITS OFFICERS OR AGENTS SHALL NOT BE RESPONSIBLE FOR THE ACCURACY OR COMPLETENESS OF SCANNED COPIES OF THIS PLAN SHEET.

TO ACCOMPANY PLANS DATED 6-22-15

EXISTING	NEW	ITEM DESCRIPTION
		WATER METER (WM)
		BACKFLOW PREVENTER ASSEMBLY (BPA)
		BACKFLOW PREVENTER ENCLOSURE (BPE)
		BOOSTER PUMP (BP)
		TRUCK LOADING STANDPIPE (TLS)
	FS	FLOW SENSOR (FS)
		MASTER IRRIGATION CONTROLLER (MIC)
		AUXILIARY IRRIGATION CONTROLLER (AIC)
		IRRIGATION CONTROLLER (IC) IRRIGATION CONTROLLER (IC) (BATTERY) IRRIGATION CONTROLLER (IC) (SOLAR) IRRIGATION CONTROLLER (IC) (TWO WIRE) IRRIGATION CONTROLLER(S) IN CONTROLLER ENCLOSURE CABINET (ICC)
acc	ACC	ARMOR-CLAD CONDUCTORS (ACC)
cnc	CNC	CONTROL AND NEUTRAL CONDUCTORS (CNC)
		IRRIGATION CONDUIT
		EXTEND IRRIGATION CONDUIT
dip	DIP	DUCTILE IRON PIPE (SUPPLY LINE) (MAIN) (DIP)
		GALVANIZED STEEL PIPE (SUPPLY LINE) (MAIN) (GSP)
		GALVANIZED STEEL PIPE (SUPPLY LINE) (LATERAL) (GSP)
		PLASTIC PIPE (SUPPLY LINE) (MAIN)
		PLASTIC PIPE (SUPPLY LINE) (LATERAL)
cp	CP	COPPER PIPE (SUPPLY LINE)
dit	DIT	DRIP IRRIGATION TUBING
		REMOTE CONTROL VALVE (RCV) REMOTE CONTROL VALVE (MASTER) (RCVM) REMOTE CONTROL VALVE (MASTER) W/FLOW METER (RCVMF)
P	P	REMOTE CONTROL VALVE W/PRESSURE REGULATOR (RCVP)
		EXISTING MANUAL CONTROL VALVE (MCV)
	V	DRIP VALVE ASSEMBLY (DVA)
	Y	WYE STRAINER ASSEMBLY (WSA)

EXISTING	NEW	ITEM DESCRIPTION
		GATE VALVE (GV)
		BALL VALVE (BV)
		QUICK COUPLING VALVE (QCV)
		CAM COUPLER ASSEMBLY (CCA)
		GARDEN VALVE ASSEMBLY (GARVA)
		PRESSURE REGULATING VALVE (PRV)
		PRESSURE RELIEF VALVE (PRLV)
		FLOW CONTROL VALVE (FCV)
		COMBINATION AIR RELEASE VALVE (CARV)
		CHECK VALVE (CV)
		FLUSH VALVE (FV)
		EXISTING NOZZLE LINE W/TURNING UNION
		EXISTING IRRIGATION SYSTEM
		EXISTING IRRIGATION SYSTEM TO BE REMOVED
		CHAIN LINK GATE
		QUICK COUPLING VALVE W/SPRINKLER PROTECTOR
3	3	SPRINKLER W/SPRINKLER PROTECTOR
	C	CONNECT TO EXISTING SYSTEM
		CAP
		CAP EXISTING
	FR	FIBER ROLL
	CS	COMPOST SOCK

- RCV SIZE
- IRRIGATION CONTROLLER
- CONTROLLER STATION
- VALVE IN PARALLEL (IF APPLICABLE)
- GPM
- QUANTITY OF SPRINKLERS (WHEN SHOWN)

* 2½"-A-2b-40-60

VALVE CODE

* VALVE CODES FOR EXISTING VALVES ARE SHOWN IN A DASHED ENCLOSURE.

STATE OF CALIFORNIA
DEPARTMENT OF TRANSPORTATION

LANDSCAPE AND EROSION CONTROL SYMBOLS

NO SCALE

RSP H2 DATED NOVEMBER 15, 2013 SUPERSEDES RSP H2 DATED JULY 19, 2013 AND STANDARD PLAN H2 DATED MAY 20, 2011 - PAGE 219 OF THE STANDARD PLANS BOOK DATED 2010.

REVISED STANDARD PLAN RSP H2

2010 REVISED STANDARD PLAN RSP H2

10-9-13

Dist	COUNTY	ROUTE	POST MILES TOTAL PROJECT	SHEET No.	TOTAL SHEETS
04	Ala	580	R33.4	65	91

Gregory A. Balzer
LICENSED LANDSCAPE ARCHITECT

July 19, 2013
PLANS APPROVAL DATE

LICENSED LANDSCAPE ARCHITECT Gregory A. Balzer 2576 Registered Expires 2-28-15 Renewal Date 7-19-13 Date STATE OF CALIFORNIA

THE STATE OF CALIFORNIA OR ITS OFFICERS OR AGENTS SHALL NOT BE RESPONSIBLE FOR THE ACCURACY OR COMPLETENESS OF SCANNED COPIES OF THIS PLAN SHEET.

TO ACCOMPANY PLANS DATED 6-22-15

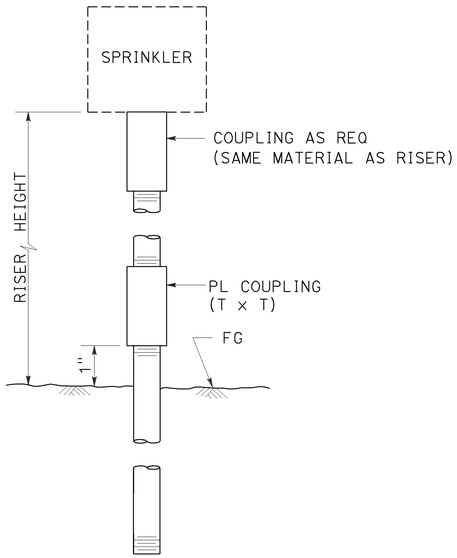

ELEVATION

RISER SPRINKLER ASSEMBLY TYPE I

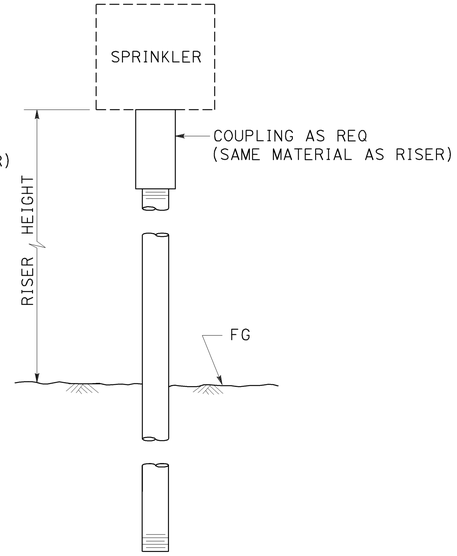

ELEVATION

RISER SPRINKLER ASSEMBLY TYPE II

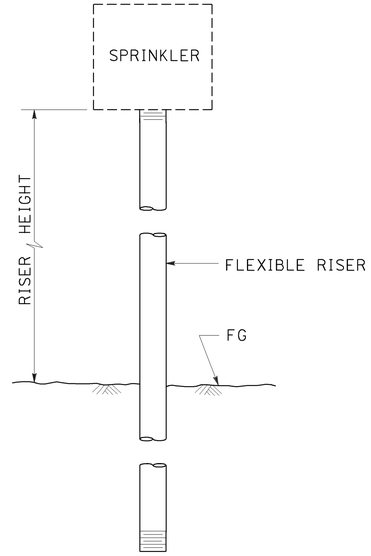

ELEVATION

RISER SPRINKLER ASSEMBLY TYPE III

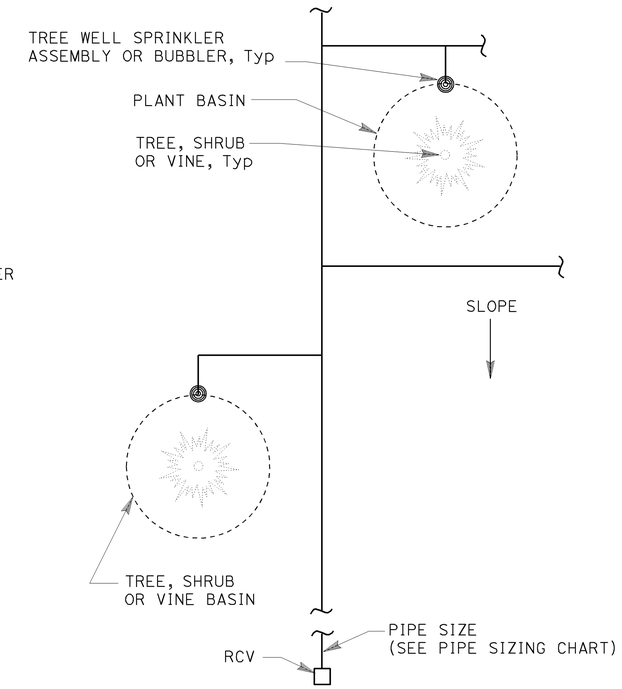

PLAN

NOTES:

1. Install tree well sprinkler assembly on up-hill side of plant when on slope.
2. Install bubbler within basin.

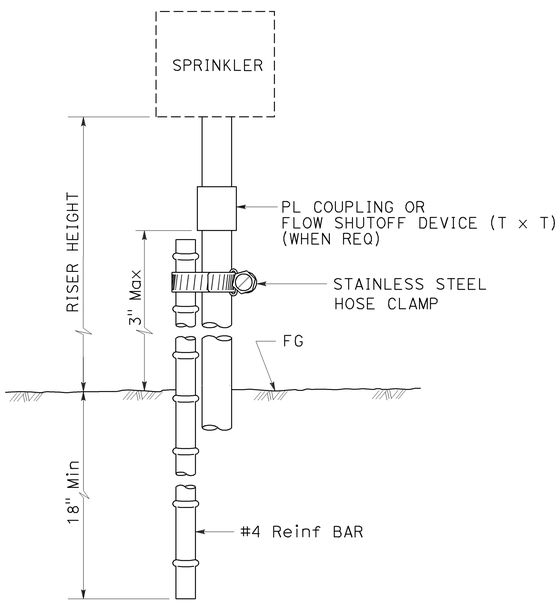

ELEVATION

RISER SPRINKLER ASSEMBLY TYPE IV

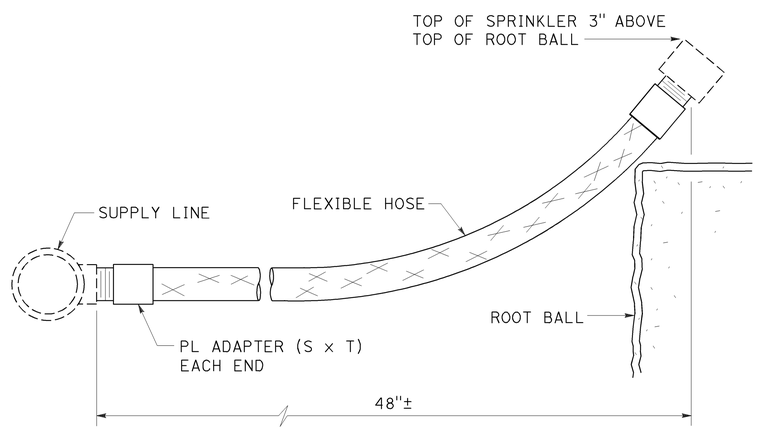

ELEVATION

RISER SPRINKLER ASSEMBLY TYPE V

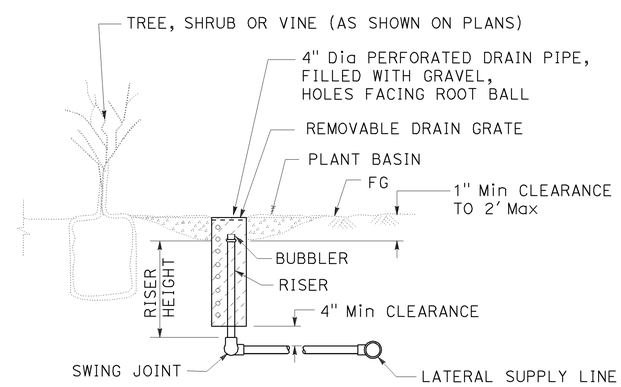

SECTION

TREE WELL SPRINKLER ASSEMBLY

STATE OF CALIFORNIA
DEPARTMENT OF TRANSPORTATION

LANDSCAPE DETAILS

NO SCALE

RSP H5 DATED JULY 19, 2013 SUPERSEDES STANDARD PLAN H5
DATED MAY 20, 2011 - PAGE 222 OF THE STANDARD PLANS BOOK DATED 2010.

REVISED STANDARD PLAN RSP H5

2010 REVISED STANDARD PLAN RSP H5

6-28-13

Dist	COUNTY	ROUTE	POST MILES TOTAL PROJECT	SHEET No.	TOTAL SHEETS
04	Ala	580	R33.4	66	91

LICENSED LANDSCAPE ARCHITECT

July 19, 2013
PLANS APPROVAL DATE

THE STATE OF CALIFORNIA OR ITS OFFICERS OR AGENTS SHALL NOT BE RESPONSIBLE FOR THE ACCURACY OR COMPLETENESS OF SCANNED COPIES OF THIS PLAN SHEET.

LICENSED LANDSCAPE ARCHITECT — Gregory A. Balzer — 2516 — Expiration Date 2-28-15 — Renewal Date 7-19-13 — Date — STATE OF CALIFORNIA

TO ACCOMPANY PLANS DATED 6-22-15

2010 REVISED STANDARD PLAN RSP H7

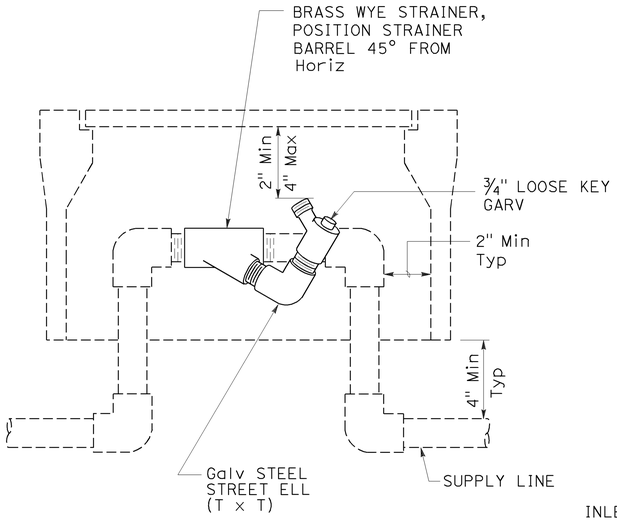

ELEVATION
WYE STRAINER ASSEMBLY

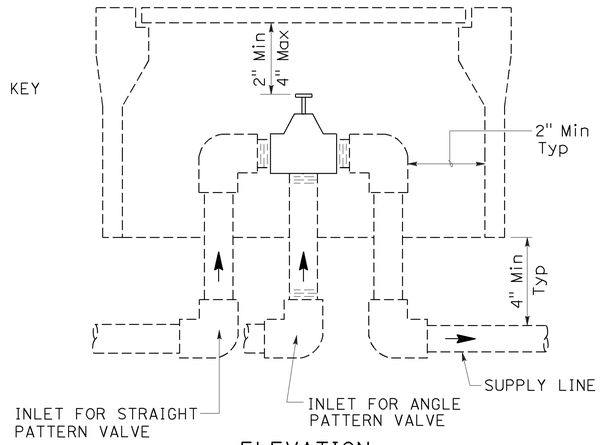

ELEVATION
VALVE

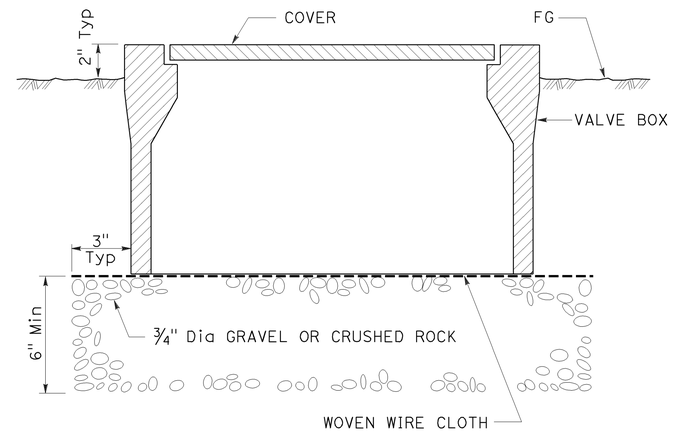

SECTION
VALVE BOX

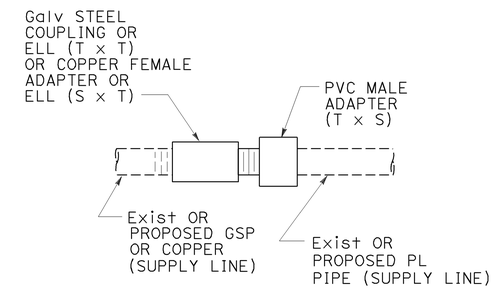

GALVANIZED OR COPPER PIPE CONNECTION TO PLASTIC PIPE

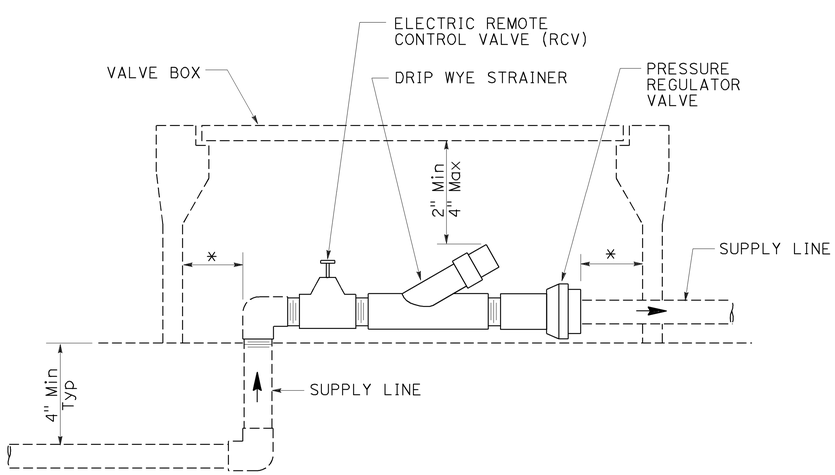

ELEVATION
DRIP VALVE ASSEMBLY

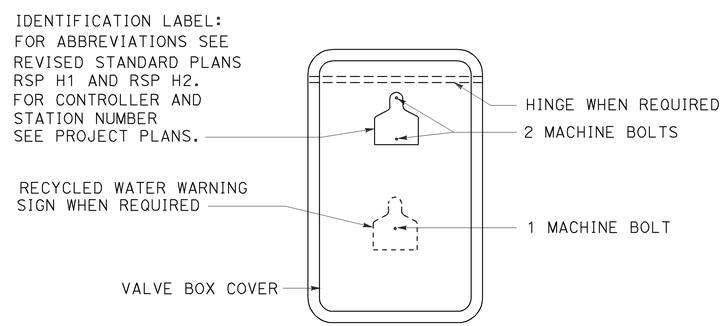

PLAN

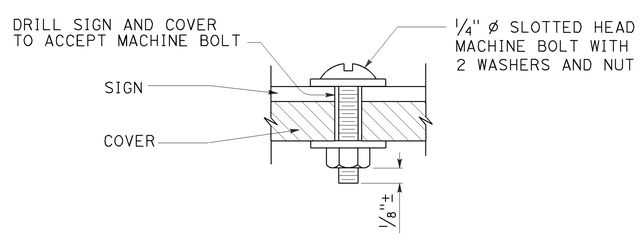

SECTION
VALVE BOX IDENTIFICATION

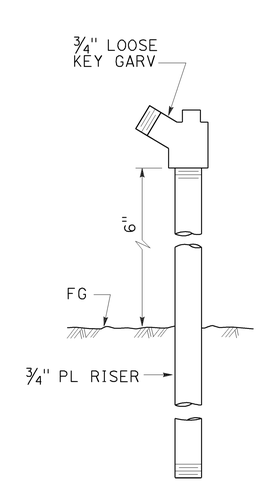

ELEVATION
GARDEN VALVE ASSEMBLY

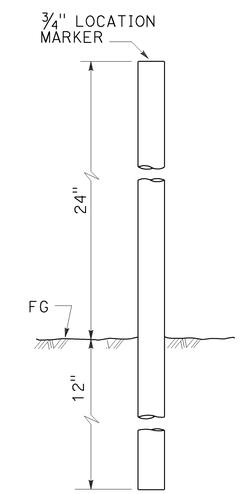

ELEVATION
LOCATION MARKER

GARDEN VALVE ASSEMBLY

STATE OF CALIFORNIA
DEPARTMENT OF TRANSPORTATION

LANDSCAPE DETAILS

NO SCALE

RSP H7 DATED JULY 19, 2013 SUPERSEDES STANDARD PLAN H7 DATED MAY 20, 2011 - PAGE 224 OF THE STANDARD PLANS BOOK DATED 2010.

REVISED STANDARD PLAN RSP H7

6-20-13

Dist	COUNTY	ROUTE	POST MILES TOTAL PROJECT	SHEET No.	TOTAL SHEETS
04	Ala	580	R33.4	67	91

LICENSED LANDSCAPE ARCHITECT

July 19, 2013
PLANS APPROVAL DATE

LICENSED LANDSCAPE ARCHITECT — Gregory A. Balzer — 2516 — Expires 2-28-15 — Renewal Date 7-19-13 — Date — STATE OF CALIFORNIA

THE STATE OF CALIFORNIA OR ITS OFFICERS OR AGENTS SHALL NOT BE RESPONSIBLE FOR THE ACCURACY OR COMPLETENESS OF SCANNED COPIES OF THIS PLAN SHEET.

TO ACCOMPANY PLANS DATED 6-22-15

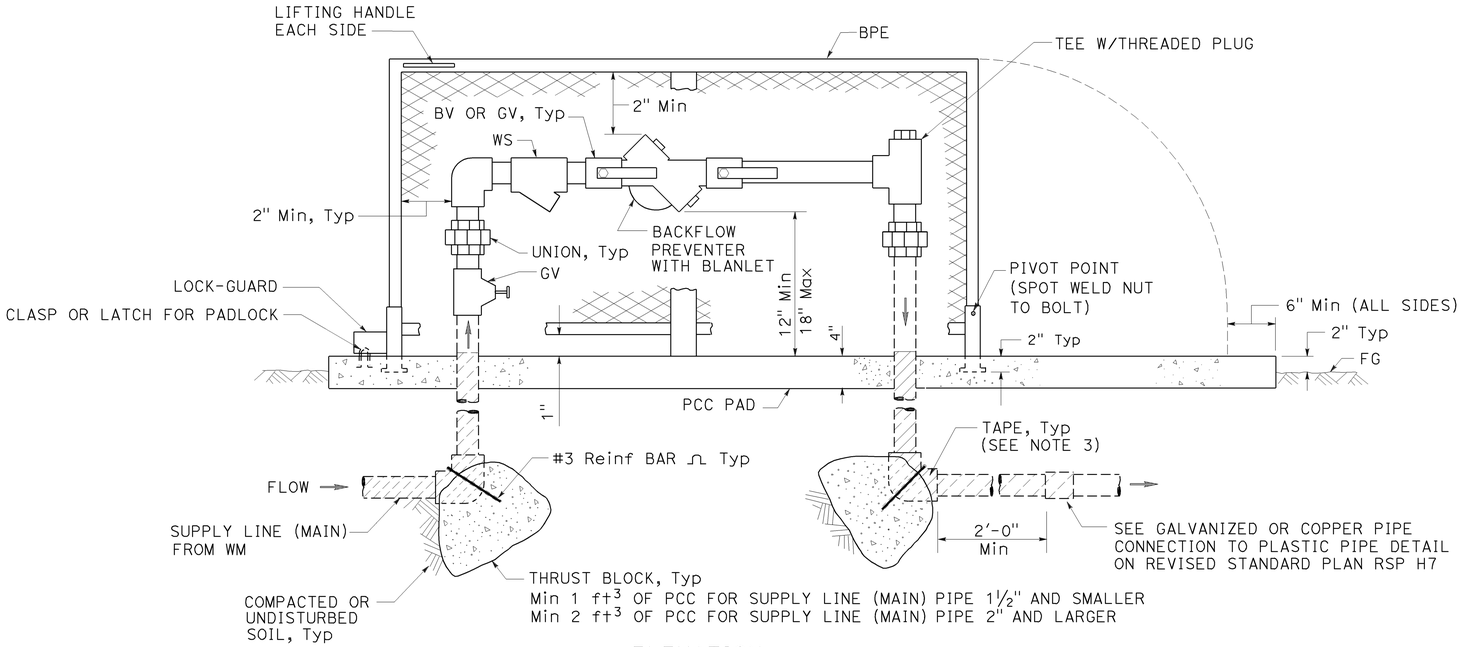

ELEVATION

BACKFLOW PREVENTER ASSEMBLY

IN ONE PIECE ENCLOSURE

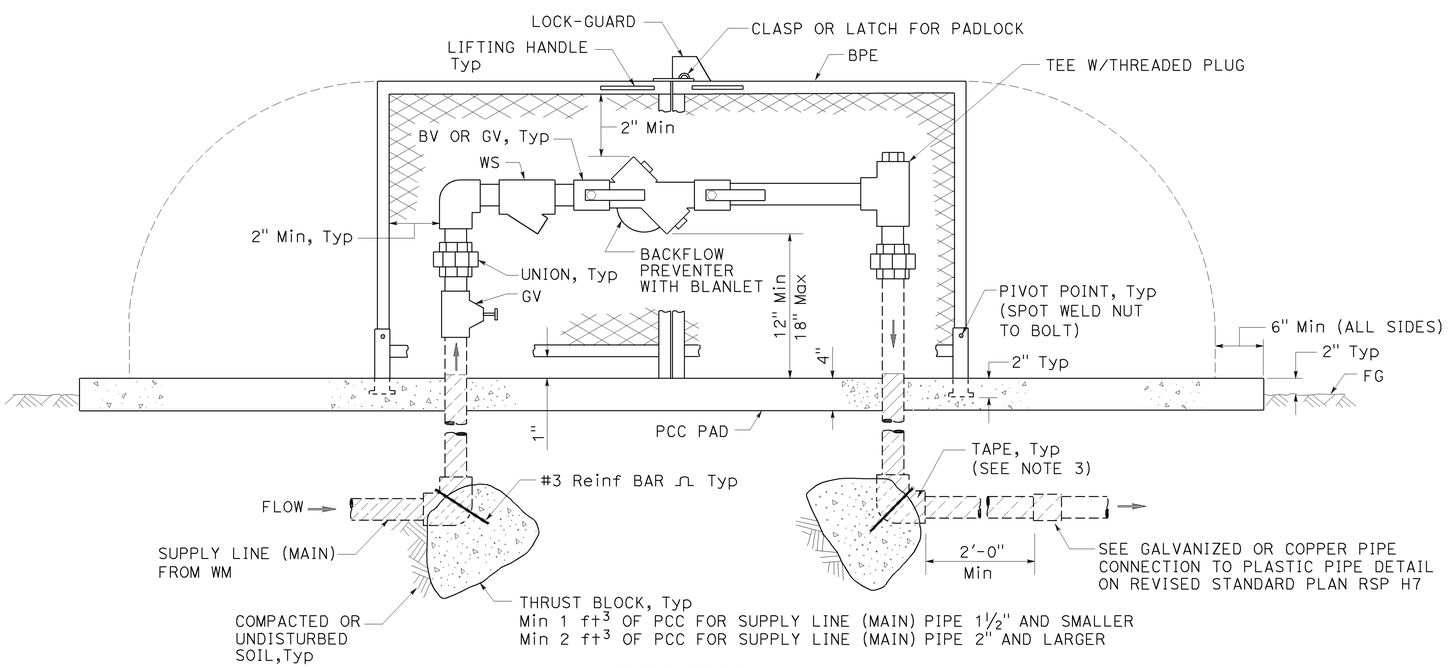

ELEVATION

BACKFLOW PREVENTER ASSEMBLY

IN TWO PIECE ENCLOSURE

NOTES:

1. Wye strainer and fittings must be the same size as the backflow preventer shown on the plans.
2. Backflow preventer assembly manifold pipe must be the same pipe as the supply line (main) pipe to be installed from the water meter to the backflow preventer assembly.
3. All metal in contact with soil and Portland Cement Concrete must be wrapped with 2" wide plastic backed adhesive polyethylene tape 20 mil thick with ½" overlap.

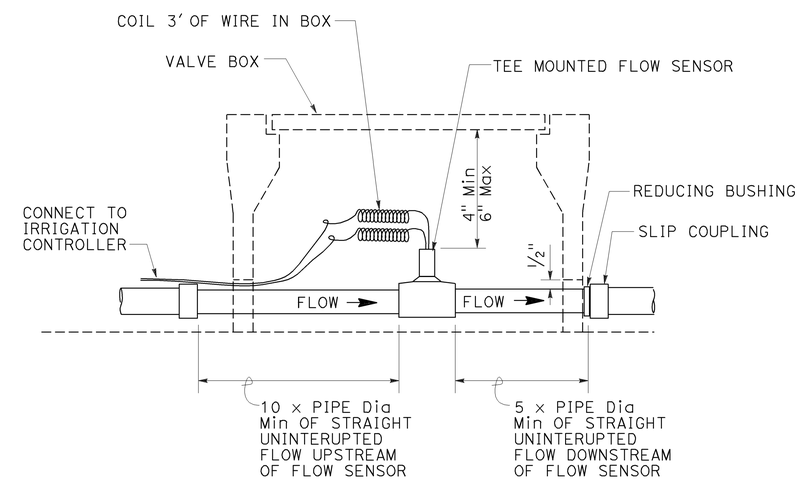

SECTION

FLOW SENSOR

STATE OF CALIFORNIA
DEPARTMENT OF TRANSPORTATION

LANDSCAPE DETAILS

NO SCALE

RSP H8 DATED JULY 19, 2013 SUPERSEDES STANDARD PLAN H8
DATED MAY 20, 2011 - PAGE 225 OF THE STANDARD PLANS BOOK DATED 2010.

REVISED STANDARD PLAN RSP H8

2010 REVISED STANDARD PLAN RSP H8

6-20-13

Dist	COUNTY	ROUTE	POST MILES TOTAL PROJECT	SHEET No.	TOTAL SHEETS
04	Ala	580	R33.4	68	91

LICENSED LANDSCAPE ARCHITECT

July 19, 2013
PLANS APPROVAL DATE

THE STATE OF CALIFORNIA OR ITS OFFICERS OR AGENTS SHALL NOT BE RESPONSIBLE FOR THE ACCURACY OR COMPLETENESS OF SCANNED COPIES OF THIS PLAN SHEET.

LICENSED LANDSCAPE ARCHITECT
Gregory A. Balzer 2576
Renewal Date 2-28-15
7-19-13
Date
STATE OF CALIFORNIA

TO ACCOMPANY PLANS DATED 6-22-15

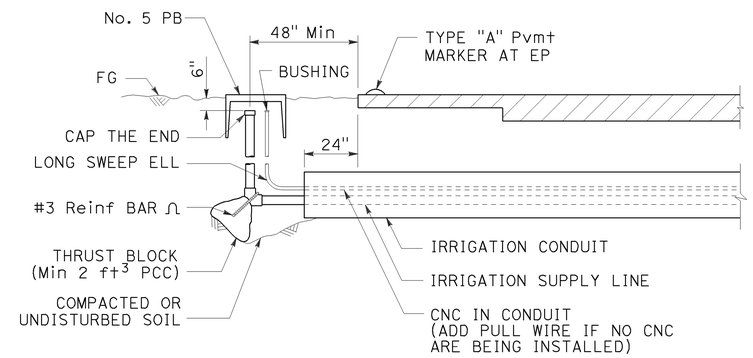

SECTION

IRRIGATION CONDUIT

UNDER TRAVELED WAY

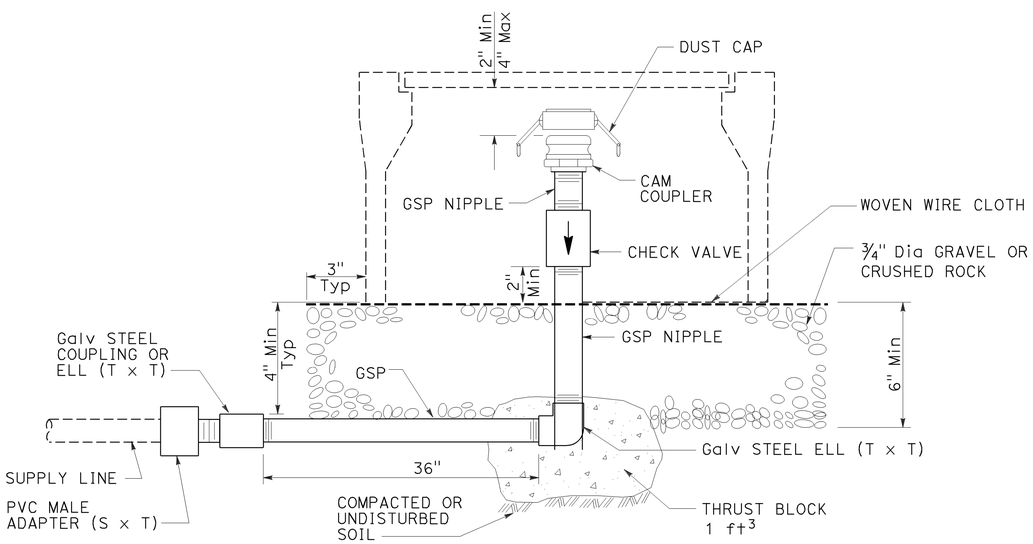

ELEVATION

CAM COUPLER ASSEMBLY

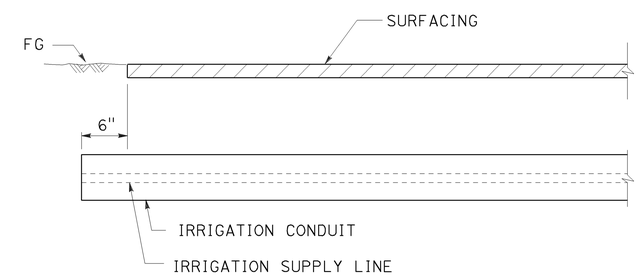

SECTION

IRRIGATION CONDUIT

UNDER SIDEWALKS, DRIVEWAYS AND PATHS

STATE OF CALIFORNIA
DEPARTMENT OF TRANSPORTATION

LANDSCAPE DETAILS

NO SCALE

RSP H9 DATED JULY 19, 2013 SUPERSEDES STANDARD PLAN H9
DATED MAY 20, 2011 - PAGE 226 OF THE STANDARD PLANS BOOK DATED 2010.

REVISED STANDARD PLAN RSP H9

2010 REVISED STANDARD PLAN RSP H9

6-28-13

Dist	COUNTY	ROUTE	POST MILES TOTAL PROJECT	SHEET No.	TOTAL SHEETS
04	Ala	580	R33.4	69	91

Gregory A. Balzer
LICENSED LANDSCAPE ARCHITECT

July 19, 2013
PLANS APPROVAL DATE

LICENSED LANDSCAPE ARCHITECT
Gregory A. Balzer 2576
Expires 2-28-15
Renewal Date
7-19-13
Date
STATE OF CALIFORNIA

THE STATE OF CALIFORNIA OR ITS OFFICERS OR AGENTS SHALL NOT BE RESPONSIBLE FOR THE ACCURACY OR COMPLETENESS OF SCANNED COPIES OF THIS PLAN SHEET.

TO ACCOMPANY PLANS DATED 6-22-15

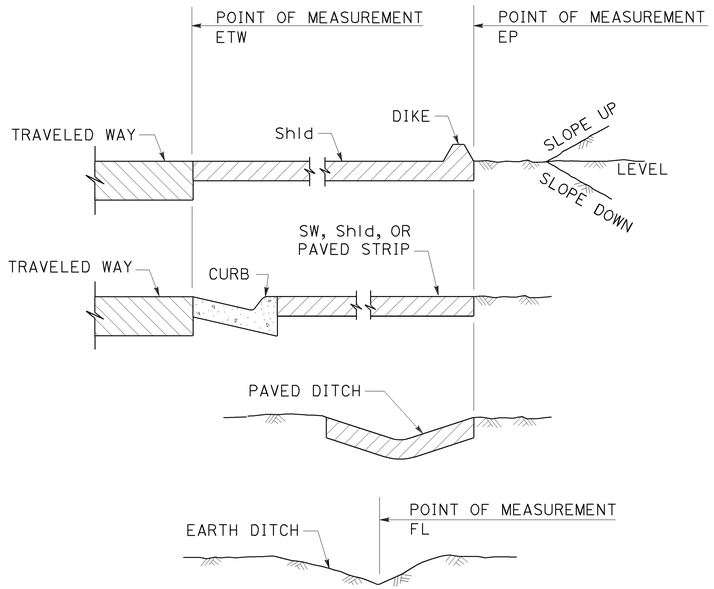

SECTION
POINTS OF MEASUREMENT

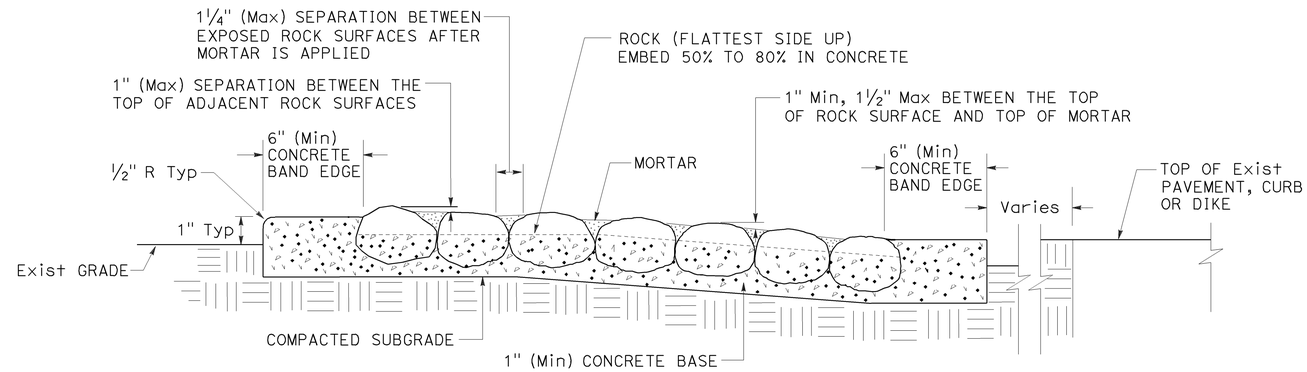

SECTION
ROCK BLANKET

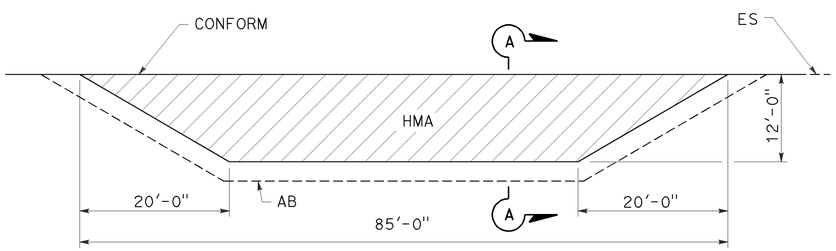

PLAN

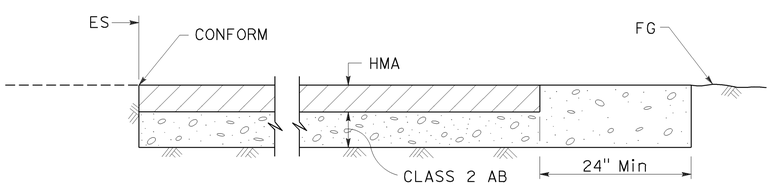

SECTION A-A
MAINTENANCE VEHICLE PULLOUT

STATE OF CALIFORNIA
DEPARTMENT OF TRANSPORTATION

LANDSCAPE DETAILS

NO SCALE

RSP H9A DATED JULY 19, 2013 SUPPLEMENTS THE STANDARD PLANS BOOK DATED 2010.

REVISED STANDARD PLAN RSP H9A

2010 REVISED STANDARD PLAN RSP H9A

6-21-13

TO ACCOMPANY PLANS DATED 6-22-15

Dist	COUNTY	ROUTE	POST MILES TOTAL PROJECT	SHEET No.	TOTAL SHEETS
04	Ala	580	R33.4	70	91

REGISTERED CIVIL ENGINEER

April 19, 2013
PLANS APPROVAL DATE

REGISTERED PROFESSIONAL ENGINEER Gurinderpal Bhullar No. C48815 Exp. 9-30-14 CIVIL STATE OF CALIFORNIA

THE STATE OF CALIFORNIA OR ITS OFFICERS OR AGENTS SHALL NOT BE RESPONSIBLE FOR THE ACCURACY OR COMPLETENESS OF SCANNED COPIES OF THIS PLAN SHEET.

NOTES:

See Revised Standard Plan RSP T9 for tables.

Use cone spacing X for taper segment, Y for tangent segment or Z for conflict situations, as approriate, per Table 1, unless X, Y, or Z cone spacing is shown on this sheet.

Unless otherwise specified in the special provisions, all temporary warning signs shall have black legend on fluorescent orange background.

California codes are designated by (CA). Otherwise, Federal (MUTCD) codes are shown.

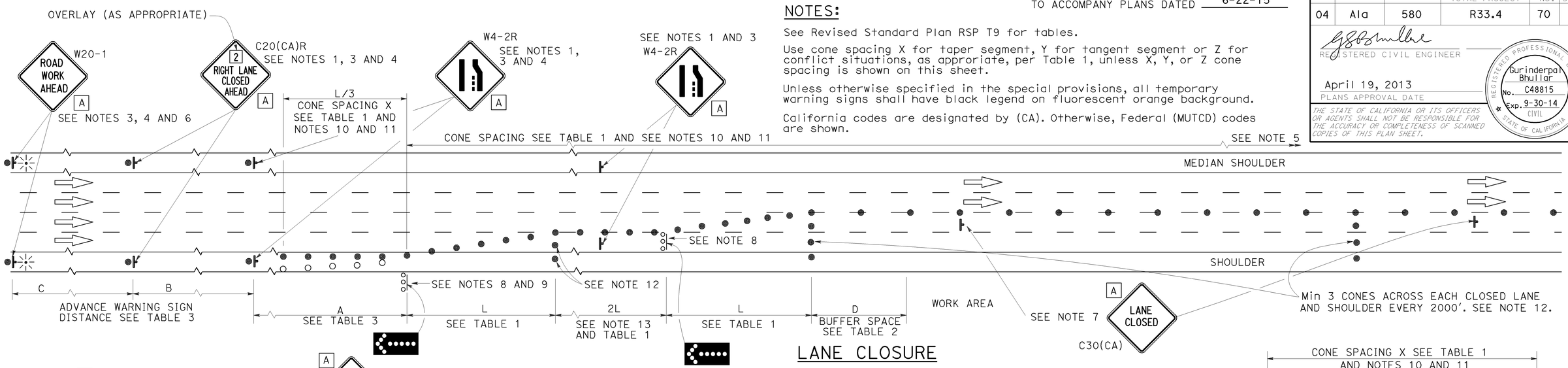

LANE CLOSURE

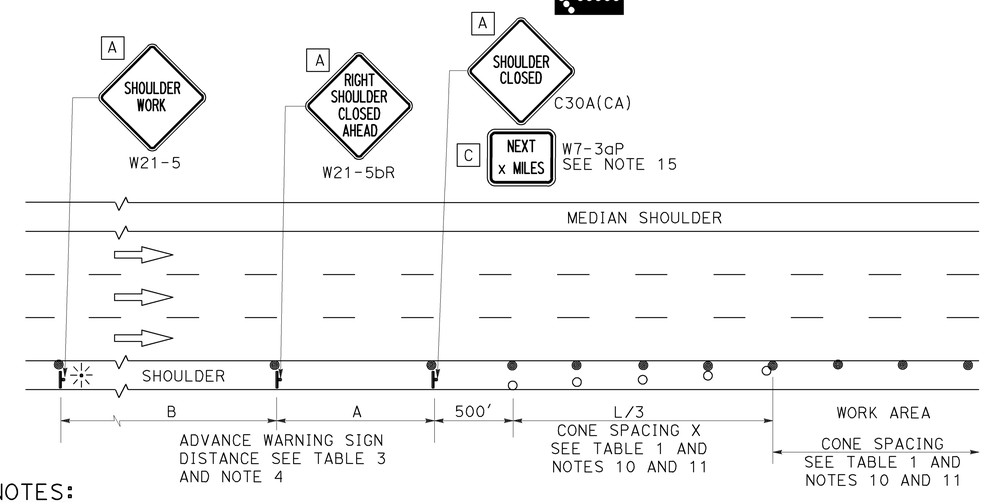

SHOULDER CLOSURE

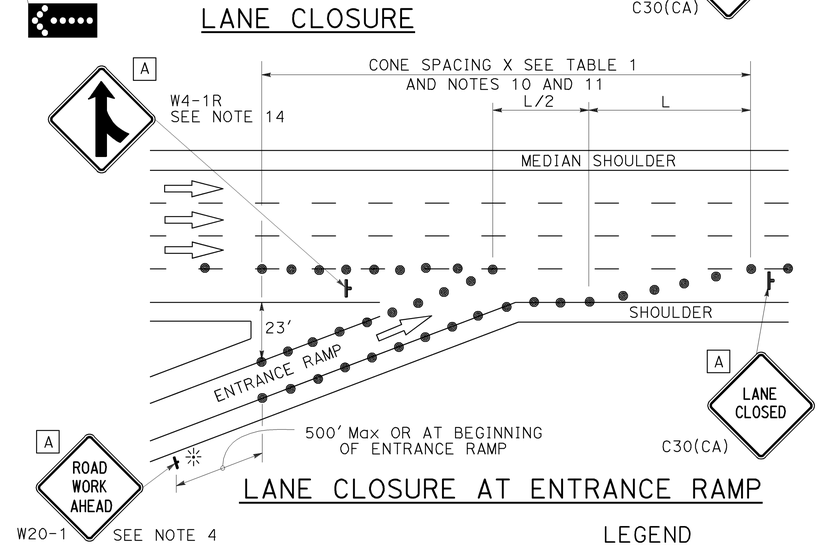

LANE CLOSURE AT ENTRANCE RAMP

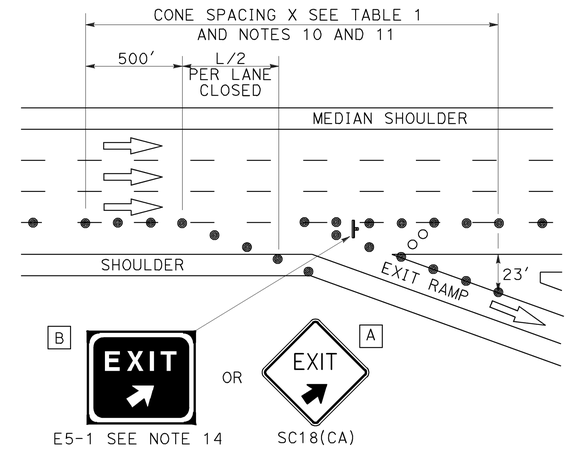

LANE CLOSURE AT EXIT RAMP

NOTES:

1. Median lane closures shall conform to the details as shown except that C20(CA)L and W4-2L signs shall be used.
2. At least one person shall be assigned to provide full time maintenance of traffic control devices for lane closures.
3. Duplicate sign installations are not required:
   a) On opposite shoulder if at least one-half of the available lanes remain open to traffic.
   b) In the median if the width of the median shoulder is less than 8' and the outside lanes are to be closed.
4. Each advance warning sign on each side of the roadway shall be equipped with at least two flags for daytime closure. Each flag shall be at least 16" x 16" in size and shall be orange or fluorescent red-orange in color. Flashing beacons shall be placed at the locations indicated for lane closure during hours of darkness.
5. A G20-2 "END ROAD WORK" sign, with minimum size of 48" x 24" as appropriate, shall be placed at the end of the lane closure unless the end of work area is obvious or ends within a larger project's limits.
6. If the W20-1 sign would follow within 2000' of a stationary W20-1 or G20-1 "ROAD WORK NEXT _____ MILES", use a C20(CA) sign for the first advance warning sign.
7. Place a C30(CA) sign every 2000' throughout length of lane closure.
8. One flashing arrow sign for each lane closed. The flashing arrow signs shall be Type I.
9. A minimum 1500' of sight distance shall be provided where possible for vehicles approaching the first flashing arrow sign. Lane closures shall not begin at top of crest vertical curve or on a horizontal curve.
10. All cones used for lane closures during the hours of darkness shall be fitted with retroreflective bands (or sleeves) as specified in the specifications.
11. Portable delineators, placed at one-half the spacing indicated for traffic cones may be used instead of cones for daytime closures only.
12. Unless otherwise specified in the special provisions, a minimum of 3 cones shall be placed transversely across each closed lane and shoulder at each location where a taper across a traffic lane ends and every 2000' as shown on the "Lane Closure" detail. Two Type II barricades may be used instead of the 3 cones. The transverse alignment of the cones or barricades on the closed shoulder may be shifted from the transverse alignment to provide access to the work.
13. Unless otherwise specified in the special provisions, the 2L tangent shown along lane lines shall be used between the L tapers required for each closed traffic lane.
14. Unless otherwise specified in the special provisions, the E5-1 or SC18(CA) and W4-1 signs shall be used as shown.
15. A W7-3aP "NEXT____ MILES" plaque must be used if theshoulder closure extends beyond the distance that can be perceived by road users.

LEGEND

- TRAFFIC CONE
- TRAFFIC CONE (OPTIONAL TAPER)
- TEMPORARY TRAFFIC CONTROL SIGN
- FLASHING ARROW SIGN (FAS)
- FAS SUPPORT OR TRAILER
- PORTABLE FLASHING BEACON

SIGN PANEL SIZE (Min)

A	48" x 48"
B	72" x 60"
C	36" x 30"

STATE OF CALIFORNIA
DEPARTMENT OF TRANSPORTATION

TRAFFIC CONTROL SYSTEM FOR LANE CLOSURE ON FREEWAYS AND EXPRESSWAYS

NO SCALE

RSP T10 DATED APRIL 19, 2013 SUPERSEDES STANDARD PLAN T10 DATED MAY 20, 2011 - PAGE 237 OF THE STANDARD PLANS BOOK DATED 2010.

REVISED STANDARD PLAN RSP T10

2010 REVISED STANDARD PLAN RSP T10

12-18-12

Dist	COUNTY	ROUTE	POST MILES TOTAL PROJECT	SHEET No.	TOTAL SHEETS
04	Ala	580	R33.4	71	91

REGISTERED CIVIL ENGINEER

April 19, 2013
PLANS APPROVAL DATE

REGISTERED PROFESSIONAL ENGINEER Gurinderpal Bhullar No. C48815 Exp. 9-30-14 CIVIL STATE OF CALIFORNIA

THE STATE OF CALIFORNIA OR ITS OFFICERS OR AGENTS SHALL NOT BE RESPONSIBLE FOR THE ACCURACY OR COMPLETENESS OF SCANNED COPIES OF THIS PLAN SHEET.

TO ACCOMPANY PLANS DATED 6-22-15

TYPICAL RAMP CLOSURES

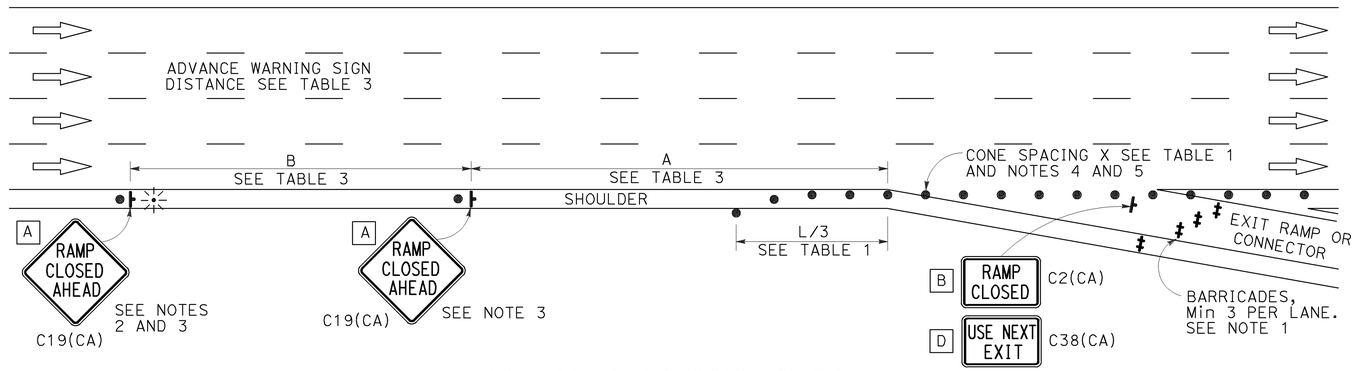

EXIT RAMP OR CONNECTOR

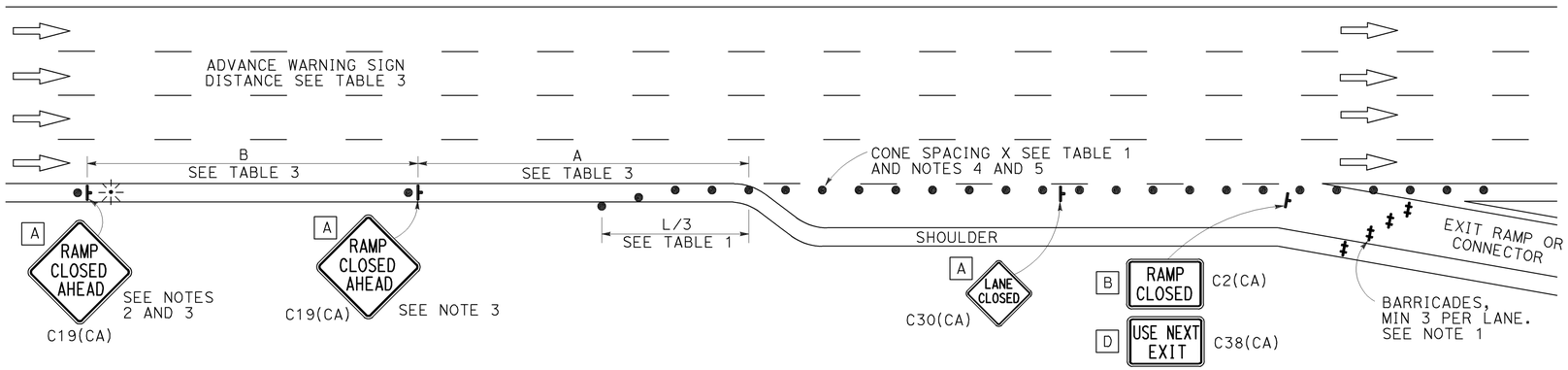

EXIT RAMP OR CONNECTOR WITH ADDITIONAL LANE

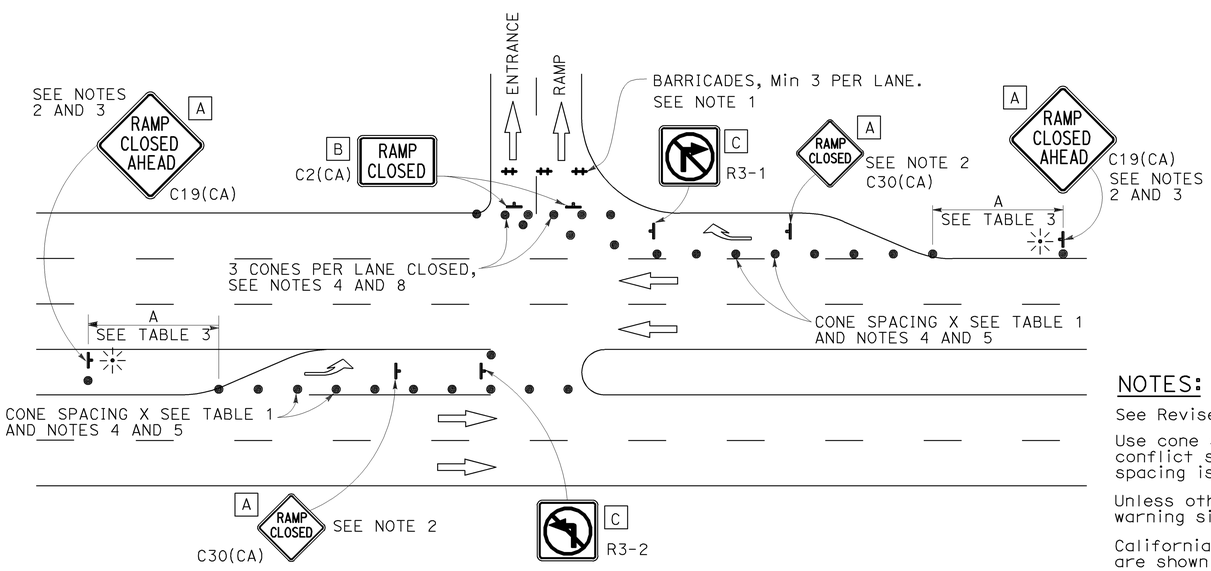

ENTRANCE RAMP WITH TURNING POCKETS

SIGN PANEL SIZE (Min)

- A 48" × 48"
- B 48" × 30"
- C 36" × 36"
- D 48" × 36"

LEGEND

- TRAFFIC CONE
- TEMPORARY TRAFFIC CONTROL SIGN
- BARRICADES
- PORTABLE FLASHING BEACON

NOTES:

1. Barricades shall be Type I, II, or III for closures lasting one week or less and Type III for closures lasting longer than one week.
2. In addition to placing the C19(CA) "RAMP CLOSED AHEAD" and C30(CA) "RAMP CLOSED" signs, black on orange overlay plates with the word "CLOSED" may be mounted, as directed by the Engineer, on all guide signs that refer to the closed ramp. The letter size on the overlay shall be the same as the guide sign.
3. Each advance C19(CA) "RAMP CLOSED AHEAD" sign shall be equipped with at least two flags for daytime closure. Each flag shall be at least 16" × 16" in size and shall be orange or fluorescent red-orange in color. A flashing beacon shall be placed on top of the first C19(CA) sign during hours of darkness.
4. All cones used for ramp closures during the hours of darkness shall be fitted with retroreflective bands (or sleeves) as specified in the specifications.
5. Portable delineators, placed at one-half the spacing indicated for traffic cones, may be used instead of cones for daytime ramp closures only.
6. At least one person shall be assigned to provide full time maintenance of traffic control devices, unless otherwise directed by the Engineer.
7. The existing "EXIT" signs shall be covered during ramp closures.
8. A minimum of 3 cones shall be placed transversely across each closed lane and shoulder.

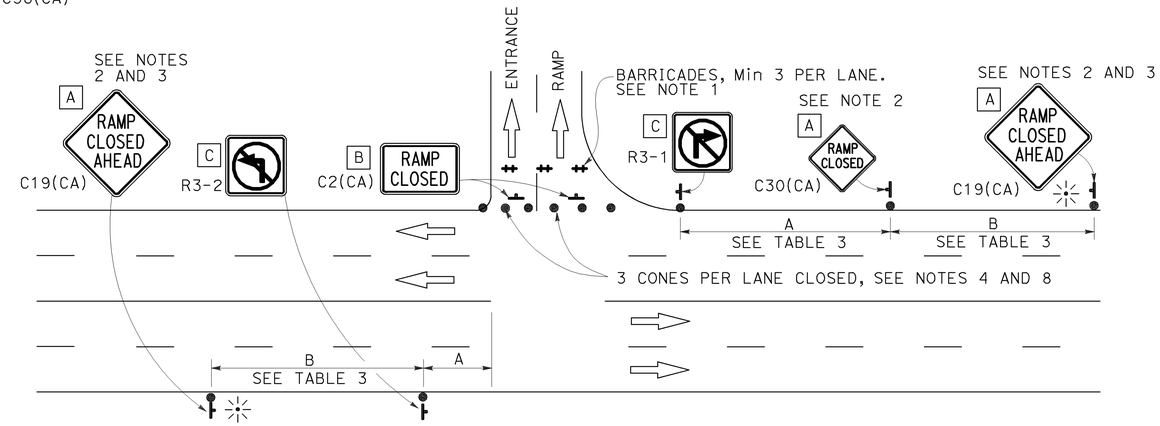

ENTRANCE RAMP WITHOUT TURNING POCKETS

NOTES:

See Revised Standard Plan RSP T9 for tables.

Use cone spacing X for taper segment, Y for tangent segment or Z for conflict situations, as approriate, per Table 1, unless X, Y, or Z cone spacing is shown on this sheet.

Unless otherwise specified in the special provisions, all temporary warning signs shall have black legend on fluorescent orange background.

California codes are designated by (CA). Otherwise, Federal (MUTCD) codes are shown.

STATE OF CALIFORNIA
DEPARTMENT OF TRANSPORTATION

TRAFFIC CONTROL SYSTEM FOR RAMP CLOSURE

NO SCALE

RSP T14 DATED APRIL 19, 2013 SUPERSEDES STANDARD PLAN T14
DATED MAY 20, 2011 - PAGE 242 OF THE STANDARD PLANS BOOK DATED 2010.

REVISED STANDARD PLAN RSP T14

2010 REVISED STANDARD PLAN RSP T14

12-18-12

Dist	COUNTY	ROUTE	POST MILES TOTAL PROJECT	SHEET No.	TOTAL SHEETS
04	Ala	580	R33.4	72	91

Theresa Gabriel
REGISTERED ELECTRICAL ENGINEER

July 19, 2013
PLANS APPROVAL DATE

REGISTERED PROFESSIONAL ENGINEER
Theresa Aziz Gabriel
No. E15129
Exp. 6-30-14
ELECTRICAL
STATE OF CALIFORNIA

THE STATE OF CALIFORNIA OR ITS OFFICERS OR AGENTS SHALL NOT BE RESPONSIBLE FOR THE ACCURACY OR COMPLETENESS OF SCANNED COPIES OF THIS PLAN SHEET.

TO ACCOMPANY PLANS DATED 6-22-15

LEGEND:

- AB — ABANDON. IF APPLIED TO CONDUIT, REMOVE CONDUCTORS
- BC — INSTALL PULL BOX IN EXISTING CONDUIT RUN
- BP — PEDESTRIAN BARRICADE, TYPE AS INDICATED ON PLAN
- CB — INSTALL CONDUIT INTO EXISTING PULL BOX
- CC — CONNECT NEW AND EXISTING CONDUIT. REMOVE EXISTING CONDUCTORS AND INSTALL CONDUCTORS AS INDICATED
- CF — CONDUIT TO REMAIN FOR FUTURE USE. REMOVE CONDUCTORS. INSTALL PULL TAPE
- DH — DETECTOR HANDHOLE
- FA — FOUNDATION TO BE ABANDONED
- IS — INSTALL SIGN ON SIGNAL MAST ARM
- NS — NO SLIP BASE ON STANDARD
- PEC — PHOTOELECTRIC CONTROL
- PEU — PHOTOELECTRIC UNIT
- RC — EQUIPMENT OR MATERIAL TO BE REMOVED AND BECOME THE PROPERTY OF THE CONTRACTOR
- RE — REMOVE ELECTROLIER, FUSES AND BALLAST. TAPE ENDS OF CONDUCTORS
- RL — RELOCATE EQUIPMENT
- RR — REMOVE AND REUSE EQUIPMENT
- RS — REMOVE AND SALVAGE EQUIPMENT
- SC — SPLICE NEW TO EXISTING CONDUCTORS
- SD — SERVICE DISCONNECT
- TSP — TELEPHONE SERVICE POINT

ABBREVIATIONS

APS	ACCESSIBLE PEDESTRIAN SIGNAL
BBS	BATTERY BACKUP SYSTEM
BC	BOLT CIRCLE
BPB	BICYCLE PUSH BUTTON
C	CONDUIT
CB	CIRCUIT BREAKER
CCTV	CLOSED CIRCUIT TELEVISION
Ckt	CIRCUIT
CMS	CHANGEABLE MESSAGE SIGN
Ctid	CALTRANS IDENTIFICATION
Comm	COMMUNICATION
DLC	LOOP DETECTOR LEAD-IN CABLE
EMS	EXTINGUISHABLE MESSAGE SIGN
EVUC	EMERGENCY VEHICLE UNIT CABLE
EVUD	EMERGENCY VEHICLE UNIT DETECTOR
FB	FLASHING BEACON
FBCA	FLASHING BEACON CONTROL ASSEMBLY
FBS	FLASHING BEACON WITH SLIP BASE
FO	FIBER OPTIC
G	EQUIPMENT GROUNDING CONDUCTOR
GB	GROUND BUS
GFCI	GROUND FAULT CIRCUIT INTERRUPTER
HAR	HIGHWAY ADVISORY RADIO
Hex	HEXAGONAL
HPS	HIGH PRESSURE SODIUM
IISNS	INTERNALLY ILLUMINATED STREET NAME SIGN
ISL	INDUCTION SIGN LIGHTING
LED	LIGHT EMITTING DIODE
LMA	LUMINAIRE MAST ARM
LPS	LOW PRESSURE SODIUM
Ltg	LIGHTING
Lum	LUMINAIRE
M	METERED
MAT	MAST ARM MOUNTING TOP ATTACHMENT
MAS	MAST ARM MOUNTING SIDE ATTACHMENT
M/M	MULTIPLE TO MULTIPLE TRANSFORMER
Mtg	MOUNTING
MV	MERCURY VAPOR LIGHTING FIXTURE
MVDS	MICROWAVE VEHICLE DETECTION SYSTEM
N	NEUTRAL (GROUNDED CONDUCTOR)
NB	NEUTRAL BUS
NC	NORMALLY CLOSE
NO	NORMALLY OPEN
P	CIRCUIT BREAKER'S POLE
PB	PULL BOX
PBA	PUSH BUTTON ASSEMBLY
PEC	PHOTOELECTRIC CONTROL
Ped	PEDESTRIAN
PEU	PHOTOELECTRIC UNIT
PT	CONDUIT WITH PULL TAPE
RE	RELOCATED EQUIPMENT
RM	RAMP METERING
RWIS	ROADSIDE WEATHER INFORMATION SYSTEM
SB	SLIP BASE
SIC	SIGNAL INTERCONNECT CABLE
Sig	SIGNAL
SMA	SIGNAL MAST ARM
SNS	STREET NAME SIGN
SP	SERVICE POINT
TDC	TELEPHONE DEMARCATION CABINET
TMS	TRAFFIC MONITORING STATION
TOS	TRAFFIC OPERATIONS SYSTEM
Veh	VEHICLE
VIVDS	VIDEO IMAGE VEHICLE DETECTION SYSTEM
WIM	WEIGH-IN-MOTION
Xfmr	TRANSFORMER

SOFFIT AND WALL MOUNTED LUMINAIRES

- PENDANT, 70 W HPS UNLESS OTHERWISE SPECIFIED
- FLUSH, 70 W HPS UNLESS OTHERWISE SPECIFIED
- WALL SURFACE, 70 W HPS UNLESS OTHERWISE SPECIFIED
- EXISTING SOFFIT OR WALL LUMINAIRE TO REMAIN UNMODIFIED
- EXISTING SOFFIT OR WALL LUMINAIRE TO BE MODIFIED AS SPECIFIED

NOTE:
Arrow indicates "street side" of luminaire.

MISCELLANEOUS ELECTROLIERS

NEW	EXISTING	
		LUMINAIRE ON WOOD POLE
		NON-STANDARD ELECTROLIER (SEE PROJECT NOTES OR PROJECT PLANS)
		CITY ELECTROLIER
		ELECTROLIER FOUNDATION (FUTURE INSTALLATION)

NOTES:

1. HPS luminaires shall be 310 W HPS when installed on Type 21, 21D, 30, 31 and 32 Standards, unless otherwise specified. HPS luminaires shall be 200 W when installed on other type standards or poles, unless otherwise specified.
2. LED luminaires shall be 235 W when installed on Type 21, 21D, 30, 31 and 32 Standards, unless otherwise specified. LED luminaires shall be 165 W when installed on other type standards or poles, unless otherwise specified.
3. Luminaires shall be the cutoff type, ANSI Type III medium cutoff lighting distribution, unless otherwise specified.

STANDARD ELECTROLIER

NEW	EXISTING	STANDARD TYPE
		15
		15D
		15 STRUCTURE
		15D STRUCTURE
		21
		21D
		21 STRUCTURE
		21D STRUCTURE
		30
		31
		32

COMMONLY USED SYMBOLS FOR UNITED STATES CUSTOMARY UNITS OF MEASUREMENT:

SYMBOL USED	DEFINITIONS
Ω	OHMS
min	MINUTE
s	SECOND
bps	BITS PER SECOND
Bps	BYTES PER SECOND
A	AMPERE
V	VOLT
V(dc)	VOLT (DIRECT CURRENT)
V(ac)	VOLT (ALTERNATING CURRENT)
FC	FOOT - CANDLE
W	WATTS
VA	VOLT-AMPERE
M	MEGA
k	KILO
m	MILLI
μ	MICRO
P	PICO
Hz	HERTZ

STATE OF CALIFORNIA
DEPARTMENT OF TRANSPORTATION

ELECTRICAL SYSTEMS (LEGEND AND ABBREVIATIONS)

NO SCALE

RSP ES-1A DATED JULY 19, 2013 SUPERSEDES STANDARD PLAN ES-1A DATED MAY 20, 2011 - PAGE 425 OF THE STANDARD PLANS BOOK DATED 2010.

REVISED STANDARD PLAN RSP ES-1A

2010 REVISED STANDARD PLAN RSP ES-1A

Dist	COUNTY	ROUTE	POST MILES TOTAL PROJECT	SHEET No.	TOTAL SHEETS
04	Ala	580	R33.4	73	91

Theresa Gabriel
REGISTERED ELECTRICAL ENGINEER

July 19, 2013
PLANS APPROVAL DATE

REGISTERED PROFESSIONAL ENGINEER
Theresa Aziz Gabriel
No. E15129
Exp. 6-30-14
ELECTRICAL
STATE OF CALIFORNIA

THE STATE OF CALIFORNIA OR ITS OFFICERS OR AGENTS SHALL NOT BE RESPONSIBLE FOR THE ACCURACY OR COMPLETENESS OF SCANNED COPIES OF THIS PLAN SHEET.

TO ACCOMPANY PLANS DATED 6-22-15

CONDUIT

NEW	EXISTING	
		LIGHTING CONDUIT, UNLESS OTHERWISE INDICATED OR NOTED
		TRAFFIC SIGNAL CONDUIT
C	c	COMMUNICATION CONDUIT
T	t	TELEPHONE CONDUIT
F	f	FIRE ALARM CONDUIT
FO	fo	FIBER OPTIC CONDUIT
		CONDUIT TERMINATION
R	r	CONDUIT RISER ATTACHED TO THE STRUCTURE OR SERVICE POLE

SERVICE EQUIPMENT

NEW	EXISTING	
OH	oh	OVERHEAD LINES
U	U	WOOD POLE, "U" INDICATES UTILITY OWNED
		POLE GUY WITH ANCHOR
		UTILITY TRANSFORMER - GROUND MOUNTED
III	III	SERVICE EQUIPMENT ENCLOSURE TYPE. DOOR INDICATES FRONT OF ENCLOSURE
T	t	TELEPHONE DEMARCATION CABINET

POLE-MOUNTED SERVICE DESIGNATION

TYPE H SERVICE, 28'-10" — TYPE OF INSTALLATION AND POLE HEIGHT ABOVE GRADE

FLASHING BEACON

NEW	EXISTING	
R	R	FLASHING BEACON (ONE VEHICLE SIGNAL HEAD WITH BACKPLATE AND VISOR) "R" INDICATES RED INDICATION, "Y" INDICATES YELLOW INDICATION
Y Y	Y Y	FLASHING BEACON WITH TYPE 15-FBS STANDARD AND A SIGN.
R R	R R	FLASHING BEACON WITH TYPES 9, 9A OR 9B SIGN UNLESS OTHERWISE SPECIFIED OR INDICATED

SIGNAL EQUIPMENT

NEW	EXISTING	
C	C	PEDESTRIAN SIGNAL HEAD "C" INDICATES COUNTDOWN PEDESTRIAN HEAD
		PUSH BUTTON ASSEMBLY POST
		PEDESTRIAN BARRICADE
		VEHICLE SIGNAL HEAD (WITH BACKPLATE AND 3-SECTIONS: RED, YELLOW AND GREEN)
		VEHICLE SIGNAL HEAD WITH ANGLE VISOR
PV	PV	MODIFICATIONS OF BASIC SYMBOL: "L" INDICATES ALL NON-ARROW SECTIONS LOUVERED "LG" INDICATES LOUVERED GREEN SECTION ONLY "PV" INDICATES ALL 12" SECTIONS PROGRAMMED VISIBILITY "8" INDICATES ALL 8" SECTIONS (ONLY WHEN SPECIFIED)
		VEHICLE SIGNAL HEAD CONSISTING OF RED, YELLOW AND GREEN LEFT ARROW SECTIONS
		VEHICLE SIGNAL HEAD CONSISTING OF RED AND YELLOW SECTIONS WITH AN UP GREEN ARROW SECTION
		VEHICLE SIGNAL HEAD (5 SECTION) CONSISTING OF RED, YELLOW AND GREEN SECTIONS WITH YELLOW AND GREEN RIGHT ARROW SECTIONS
		TYPE 15TS STANDARD WITH VEHICLE SIGNAL HEAD AND LUMINAIRE
		TYPE 21TS STANDARD WITH VEHICLE SIGNAL HEAD AND LUMINAIRE
		STANDARD WITH LUMINAIRE AND SIGNAL MAST ARMS AND ATTACHED VEHICLE SIGNAL HEADS
		TYPE 1 STANDARD WITH ATTACHED VEHICLE SIGNAL HEADS
		STANDARD WITH A SIGNAL MAST ARM, ATTACHED VEHICLE SIGNAL HEADS AND INTERNALLY ILLUMINATED STREET NAME SIGN
		CONTROLLER ASSEMBLY. DOOR INDICATES FRONT OF CABINET

SIGNAL EQUIPMENT Cont

NEW	EXISTING	
		GUARD POST
		TYPE 1 STANDARD WITH RAMP METERING SIGN
		OPTICAL DETECTOR FOR THE EMERGENCY VEHICLE DETECTION SYSTEM

NOTES:

1. All signal sections shall be 12" unless shown otherwise.
2. Signal heads shall be provided with backplates unless shown otherwise.

ILLUMINATED OVERHEAD SIGN

NEW	EXISTING	
		SINGLE POST, SINGLE ILLUMINATED SIGN, BALANCED BUTTERFLY
		SINGLE POST, DOUBLE ILLUMINATED SIGN, BALANCED BUTTERFLY
		SINGLE POST, SINGLE ILLUMINATED SIGN, FULL CANTILEVER
		DOUBLE POST, SINGLE ILLUMINATED SIGN
		SINGLE ILLUMINATED SIGN MOUNTED ON STRUCTURE
		DOUBLE POST, SINGLE ILLUMINATED SIGN WITH ELECTROLIER

STATE OF CALIFORNIA
DEPARTMENT OF TRANSPORTATION

ELECTRICAL SYSTEMS (LEGEND AND ABBREVIATIONS)

NO SCALE

RSP ES-1B DATED JULY 19, 2013 SUPERSEDES STANDARD PLAN ES-1B DATED MAY 20, 2011 - PAGE 426 OF THE STANDARD PLANS BOOK DATED 2010.

REVISED STANDARD PLAN RSP ES-1B

2010 REVISED STANDARD PLAN RSP ES-1B

7-15-13

Dist	COUNTY	ROUTE	POST MILES TOTAL PROJECT	SHEET No.	TOTAL SHEETS
04	Ala	580	R33.4	74	91

Theresa Gabriel
REGISTERED ELECTRICAL ENGINEER

July 19, 2013
PLANS APPROVAL DATE

REGISTERED PROFESSIONAL ENGINEER
Theresa Aziz Gabriel
No. E15129
Exp. 6-30-14
ELECTRICAL
STATE OF CALIFORNIA

THE STATE OF CALIFORNIA OR ITS OFFICERS OR AGENTS SHALL NOT BE RESPONSIBLE FOR THE ACCURACY OR COMPLETENESS OF SCANNED COPIES OF THIS PLAN SHEET.

TO ACCOMPANY PLANS DATED 6-22-15

EQUIPMENT IDENTIFICATION

ILLUMINATED SIGN IDENTIFICATION NUMBER:

SIGN No. 12345
10 ISL SCI 1.0

- SIGN NUMBER - PLACE ON POST OR STRUCTURE
- TRANSFORMER RATING (kVA)
- LIGHTING CONTROL TYPE
- NUMBER AND TYPE OF FIXTURES

DO NOT PLACE ON STANDARD OR STRUCTURE

ELECTROLIER OR EQUIPMENT IDENTIFICATION NUMBER:

12345 - 15'-0"

- MAST ARM LENGTH, IF SHOWN. DO NOT PLACE ON STANDARD OR STRUCTURE
- EQUIPMENT NUMBER - PLACE ON STANDARD OR STRUCTURE. EXISTING EQUIPMENT NUMBERS ARE SHOWN IN PARENTHESIS

CONDUIT AND CONDUCTOR IDENTIFICATION:

1½"C, 2#10, 15#14, 2 DLC, 12P#18

- PAIR
- NUMBER AND SIZE OF CONDUCTORS AND CABLES
- SIZE OF CONDUIT IN INCHES

ø1, ø2, ø2P, etc.	TRAFFIC PHASE IDENTIFICATION FOR SIGNAL FACES, DETECTORS AND PHASE DIAGRAMS
1 2 3	LEGEND NUMBERS
A B C	EQUIPMENT, SIGNAL POLES, INSTALLATION OR ITEMS
1 2 3	CONDUIT RUN NUMBERS

SIGNAL AND LIGHTING STANDARD (TYPICAL DESIGNATION):

19A - 3 - 100

- WIND VELOCITY = 100 mph
- CASE 3 ARM LOADING
- STANDARD TYPE
- STANDARD PLAN SHEET NUMBER
- DETAIL, NUMBER, SECTION, TYPE OR ELEVATION

MISCELLANEOUS EQUIPMENT

NEW	EXISTING	
CMS	cms	CHANGEABLE MESSAGE SIGN
		CLOSED CIRCUIT TELEVISION CAMERA
		HIGHWAY ADVISORY RADIO POLE AND ANTENNA
EMS	ems	EXTINGUISHABLE MESSAGE SIGN
M V	m v	DETECTION DEVICE M = MICROWAVE SENSOR V = VIDEO IMAGE SENSOR

WIRING DIAGRAM LEGEND

----	EXTERNAL CONDUCTOR
	CONDUCTOR OR BUS
	TIE POINT
	CONTACTOR COIL
	CONTACTOR, NO CONTACT
	TERMINAL BLOCKS
	CONTACTOR, NC CONTACT
	ENCLOSURE BOND
	GROUNDING ELECTRODE
	CIRCUIT BREAKER
	RECEPTACLE

PULL BOXES

NEW	EXISTING	
		PULL BOX, No. 5 UNLESS OTHERWISE INDICATED OR NOTED
3	9A(21)	PULL BOX, ADDITIONAL DESIGNATIONS OR DESCRIPTIONS

3 No. 3½ PULL BOX
5 No. 5 PULL BOX
6 No. 6 PULL BOX
7 No. 7 (CEILING PULL BOX)
8 No. 8 (PENDANT SOFFIT PULL BOX)
9 No. 9 PULL BOX
9A No. 9A PULL BOX

(C) COMMUNICATIONS PULL BOX
(E) PULL BOX WITH EXTENSION
(S) SPRINKLER CONTROL PULL BOX
(21) ANCHOR BOLTS AND CONDUIT FOR FUTURE INSTALLATION OF TYPE 21 STANDARD
(T) TRAFFIC PULL BOX

VEHICLE DETECTORS

5 J 9 U

- VEHICLE DETECTOR DESIGNATION
- U = UPPER
  L = LOWER
- SLOT NUMBER IN INPUT FILE
- INPUT FILE (I OR J)
- PHASE

NEW	EXISTING	
		TYPE A DETECTOR LOOP. OUTLINE OF SAWCUT SHOWN
		TYPE B DETECTOR LOOP. OUTLINE OF SAWCUT SHOWN
		TYPE C DETECTOR LOOP. OUTLINE OF SAWCUT SHOWN
		TYPE D DETECTOR LOOP. OUTLINE OF SAWCUT SHOWN
		TYPE E DETECTOR LOOP. OUTLINE OF SAWCUT SHOWN
		TYPE Q DETECTOR LOOP. OUTLINE OF SAWCUT SHOWN
		MAGNETIC DETECTOR
DH	dh	DETECTOR HANDHOLE
		MICROWAVE OR VIDEO DETECTION ZONE

STATE OF CALIFORNIA
DEPARTMENT OF TRANSPORTATION

ELECTRICAL SYSTEMS (LEGEND AND ABBREVIATIONS)

NO SCALE

RSP ES-1C DATED JULY 19, 2013 SUPERSEDES STANDARD PLAN ES-1C DATED MAY 20, 2011 - PAGE 427 OF THE STANDARD PLANS BOOK DATED 2010.

REVISED STANDARD PLAN RSP ES-1C

2010 REVISED STANDARD PLAN RSP ES-1C

7-11-13

DIST	COUNTY	ROUTE	POST MILES TOTAL PROJECT	SHEET NO.	TOTAL SHEETS
04	Ala	580	R33.4	75	91

Theresa Gabriel
REGISTERED ELECTRICAL ENGINEER

July 19, 2013
PLANS APPROVAL DATE

REGISTERED PROFESSIONAL ENGINEER Theresa Aziz Gabriel No. E15129 Exp. 6-30-14 ELECTRICAL STATE OF CALIFORNIA

THE STATE OF CALIFORNIA OR ITS OFFICERS OR AGENTS SHALL NOT BE RESPONSIBLE FOR THE ACCURACY OR COMPLETENESS OF SCANNED COPIES OF THIS PLAN SHEET.

TO ACCOMPANY PLANS DATED 6-22-15

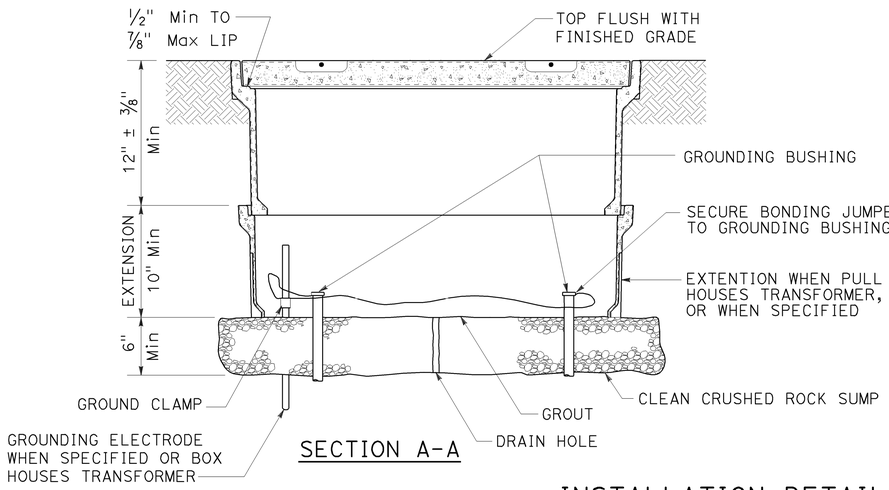

SECTION A-A

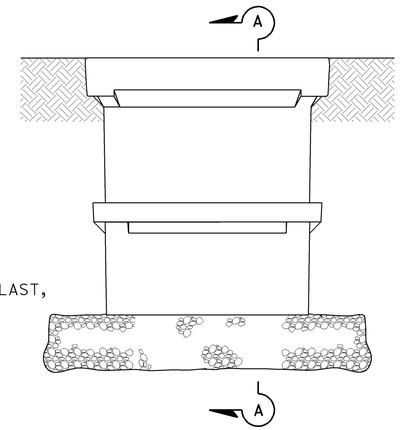

SIDE VIEW

INSTALLATION DETAILS

DETAIL A

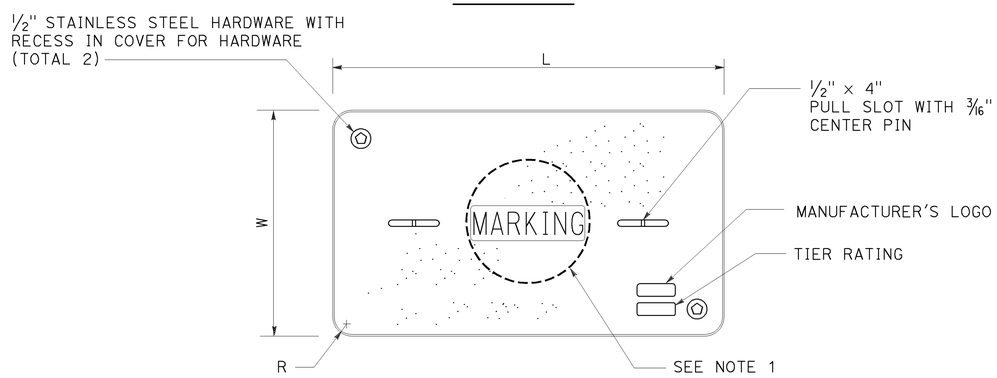

COVER TOP VIEW

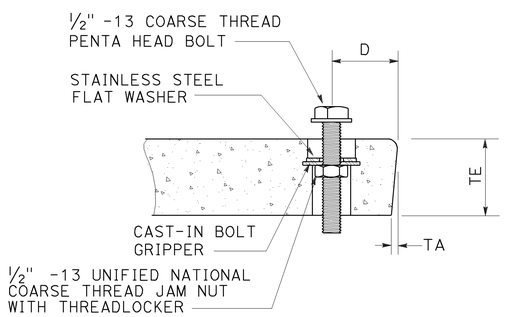

TYPICAL COVER CAPTIVE BOLT

OR SIMILAR

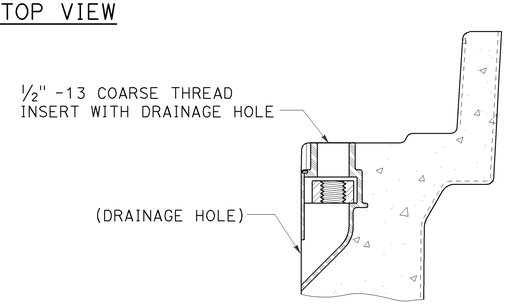

TYPICAL THREADED INSERT

OR SIMILAR

DIMENSION TABLE										
PULL BOX	PULL BOX			COVER						
	MINIMUM DEPTH BOX	MINIMUM DEPTH EXTENSION	MAXIMUM WEIGHT	L	W	R	TE	TA	D	MAXIMUM WEIGHT
No. 3½	12"	N/A	40 lb	1′ - 3⅜"	10⅛"	1⅜"	2"	⅛"	1¾"	30 lb
No. 5	12"	10"	55 lb	1′ - 11¼"	1′ - 1¾"	1⅜"	2"	⅛"	1¾"	60 lb
No. 6	12"	10"	70 lb	2′ - 6½"	1′ - 5½"	1⅜"	2"	⅛"	2"	85 lb

NOTES:

1. Pull box covers shall be marked as follows: "SERVICE" Service circuits between service point and service disconnect; "SPRINKLER-CONTROL" sprinkler control circuits, 50 V or less; "CALTRANS" on all pull boxes, except pull boxes marked "SPRINKLER-CONTROL"; and "TELEPHONE" Telephone service;
   - A) No. 3½ pull box.
     - 1) "SIGNAL" - Traffic signal circuits with or without lighting or sign lighting circuits.
     - 2) "LIGHTING" - Lighting or sign lighting circuits where voltage is under 600 V.
   - B) No. 5, 6, 9 or 9A pull box.
     - 1) "TRAFFIC SIGNAL" - Traffic signal circuits with or without lighting or sign lighting circuits.
     - 2) "LIGHTING" - Lighting or sign lighting circuits where voltage is under 600 V.
     - 3) "LIGHTING-HIGH VOLTAGE" - Lighting or sign lighting circuits where voltage is above 600 V.
     - 4) "IRRIGATION" - Circuits to irrigation controller 120 V or more.
     - 5) "RAMP METER" - Ramp meter circuits.
     - 6) "COUNT STATION" - Count or speed monitor circuits.
     - 7) "COMMUNICATIONS" - Communication circuits.
     - 8) "TOS COMMUNICATIONS" - TOS communication line.
     - 9) "TOS POWER" - TOS power.
     - 10) "TDC POWER" - Telephone demarcation cabinet power.
     - 11) "CCTV" - Closed circuit television circuits.
     - 12) "TMS" - Traffic monitoring station circuits.
     - 13) "CMS" - Changeable message sign circuits.
     - 14) "HAR" - Highway advisory radio circuits.
     - 15) "BOOSTER PUMP" - Booster pump circuit.
2. The nominal dimensions of the opening in which the cover sets shall be the same as the cover dimensions except the length and width dimensions shall be ⅛" greater.
3. Covers and boxes shall be interchangeable with California standard male and female gages. When interchanged with a standard male or female gage, the top surfaces shall be flush within ⅛". Top outside radius of covers and pull boxes shall have a ⅛" radius.
4. Pull box extension may be another pull box as long as the bottom edge of the pull box can fit into the cover opening.
5. All dimensions for the cover for non-traffic pull box are nominal values.

STATE OF CALIFORNIA
DEPARTMENT OF TRANSPORTATION

ELECTRICAL SYSTEMS (NON-TRAFFIC PULL BOX)

NO SCALE

RSP ES-8A DATED JULY 19, 2013 SUPERSEDES RSP ES-8A DATED JANUARY 20, 2012 THAT SUPPLEMENTS THE STANDARD PLANS BOOK DATED 2010.

REVISED STANDARD PLAN RSP ES-8A

2010 REVISED STANDARD PLAN RSP ES-8A

7-15-13

Dist	COUNTY	ROUTE	POST MILES TOTAL PROJECT	SHEET No.	TOTAL SHEETS
04	Ala	580	R33.4	76	91

Theresa Gabriel
REGISTERED ELECTRICAL ENGINEER

July 19, 2013
PLANS APPROVAL DATE

REGISTERED PROFESSIONAL ENGINEER
Theresa Aziz Gabriel
No. E15129
Exp. 6-30-14
ELECTRICAL
STATE OF CALIFORNIA

THE STATE OF CALIFORNIA OR ITS OFFICERS OR AGENTS SHALL NOT BE RESPONSIBLE FOR THE ACCURACY OR COMPLETENESS OF SCANNED COPIES OF THIS PLAN SHEET.

TO ACCOMPANY PLANS DATED 6-22-15

2010 REVISED STANDARD PLAN RSP ES-10A

ISOFOOTCANDLE CURVE - MINIMUM

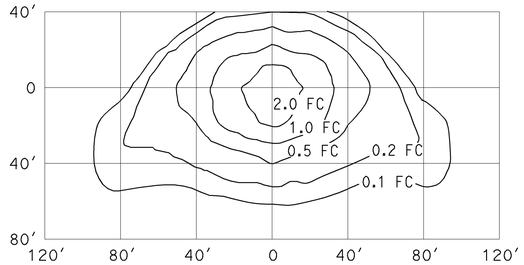

TYPE III MEDIUM CUTOFF

Cutoff Luminaire
34′ Mounting Height
Lamp operated at 22,000 lm
200-W high pressure sodium lamp
ANSI Designation S66

ISOFOOTCANDLE CURVE - MINIMUM

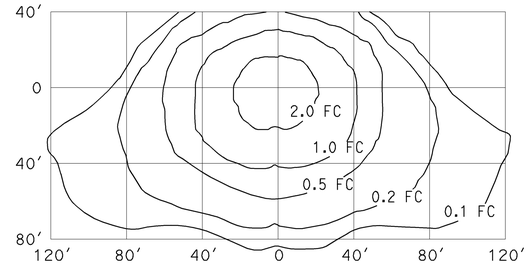

TYPE III MEDIUM CUTOFF

Cutoff Luminaire
40′ Mounting Height
Lamp operated at 37,000 lm
310-W high pressure sodium lamp
ANSI Designation S67

ISOFOOTCANDLE CURVE - MINIMUM

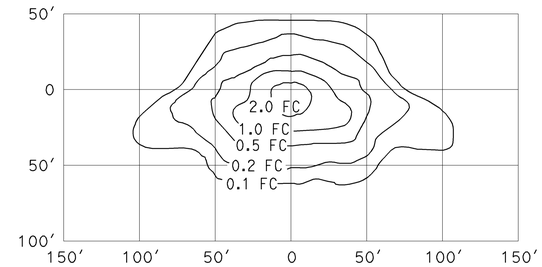

TYPE III MEDIUM CUTOFF

Cutoff Luminaire
30′ Mounting Height
Lamp operated at 16,000 lm
150-W high pressure sodium lamp
ANSI Designation S55

ISOFOOTCANDLE CURVE - MINIMUM

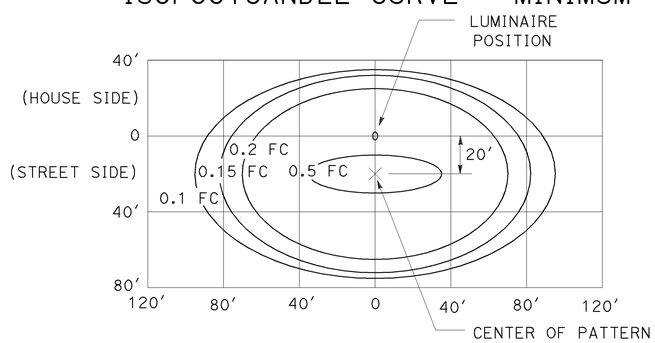

LED LUMINAIRE ROADWAY 1

165-W at 34′ Mounting Height

ISOFOOTCANDLE CURVE - MINIMUM

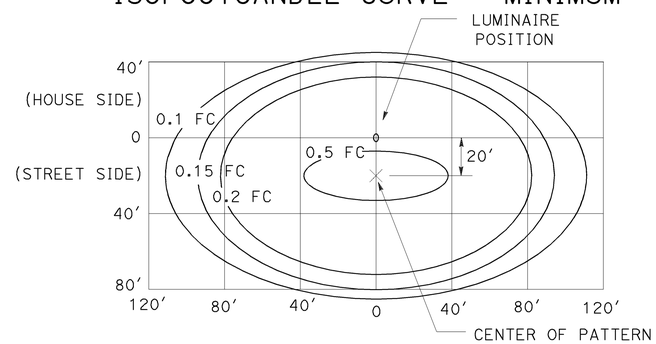

LED LUMINAIRE ROADWAY 2

235-W at 40′ Mounting Height

ISOFOOTCANDLE CURVE - MINIMUM

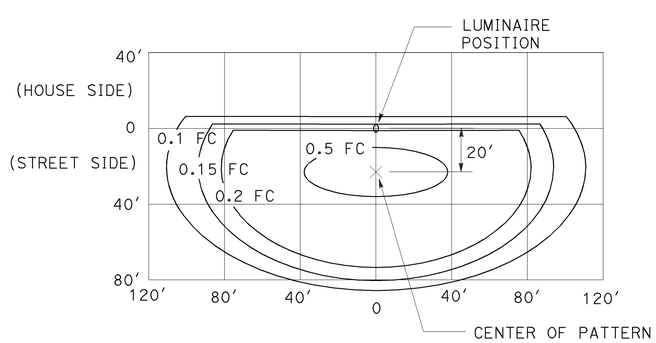

LED LUMINAIRE ROADWAY 3

235-W at 40′ Mounting Height
with back side control

ISOFOOTCANDLE CURVE - MINIMUM

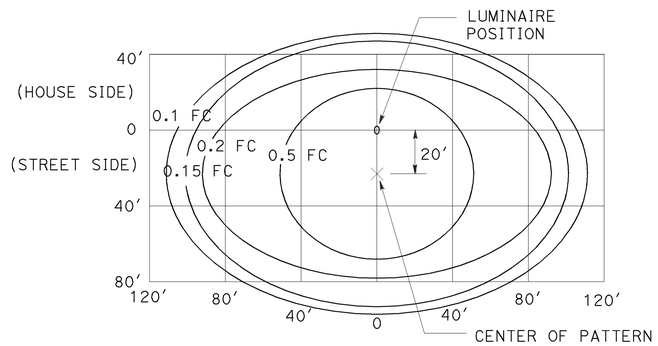

LED LUMINAIRE ROADWAY 4

300-W at 40′ Mounting Height

ISOFOOTCANDLE CURVE - MINIMUM

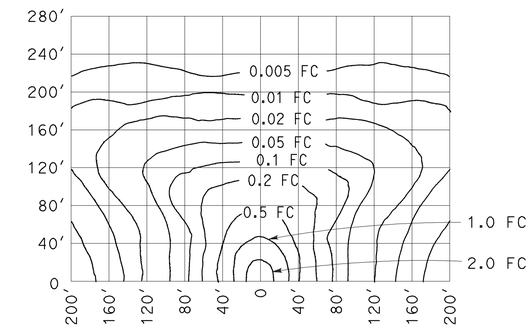

LOW PRESSURE SODIUM LUMINAIRE

40′ Mounting Height
Lamp operated at 33,000 lm
180-W low pressure sodium lamp

STATE OF CALIFORNIA
DEPARTMENT OF TRANSPORTATION

ELECTRICAL SYSTEMS (ISOFOOTCANDLE DIAGRAMS)

NO SCALE

RSP ES-10A DATED JULY 19, 2013 SUPERSEDES RSP ES-10A DATED JULY 20, 2012 THAT SUPPLEMENTS THE STANDARD PLANS BOOK DATED 2010.

REVISED STANDARD PLAN RSP ES-10A

Dist	COUNTY	ROUTE	POST MILES TOTAL PROJECT	SHEET No.	TOTAL SHEETS
04	Ala	580	R33.4	77	91

REGISTERED CIVIL ENGINEER

July 19, 2013
PLANS APPROVAL DATE

REGISTERED PROFESSIONAL ENGINEER
Stanley P. Johnson
No. C57793
Exp. 3-31-14
CIVIL
STATE OF CALIFORNIA

THE STATE OF CALIFORNIA OR ITS OFFICERS OR AGENTS SHALL NOT BE RESPONSIBLE FOR THE ACCURACY OR COMPLETENESS OF SCANNED COPIES OF THIS PLAN SHEET.

TO ACCOMPANY PLANS DATED 6-22-15

STANDARD TYPE	SETBACK (DIMENSION A)
32	30'-0" (Min)
31	20'-0" (Min)
15, 15D, 15-SB, 21, 21D, 30	ARM LENGTH (Min)

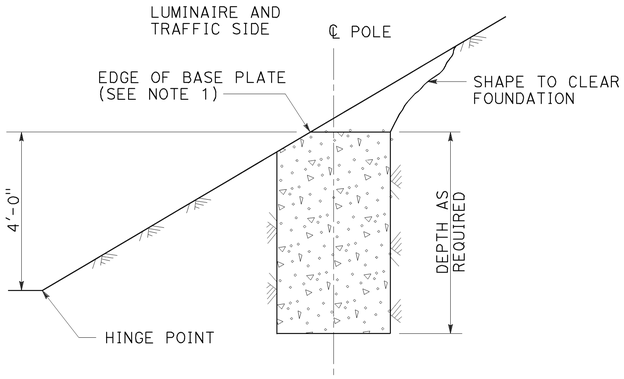

CUT SLOPES
STEEPER THAN 4:1,
LESS THAN 2:1
DETAIL A-1
See Note 2 and 3

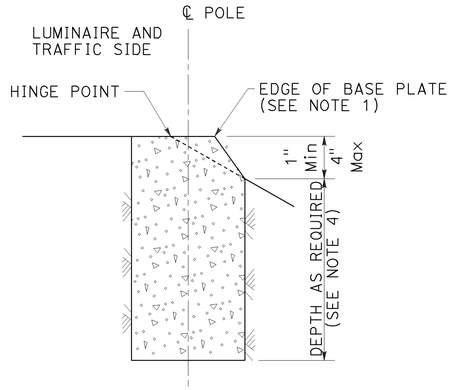

FILL SLOPES
STEEPER THAN 4:1,
LESS THAN 2:1
DETAIL A-2
See Note 2 and 3

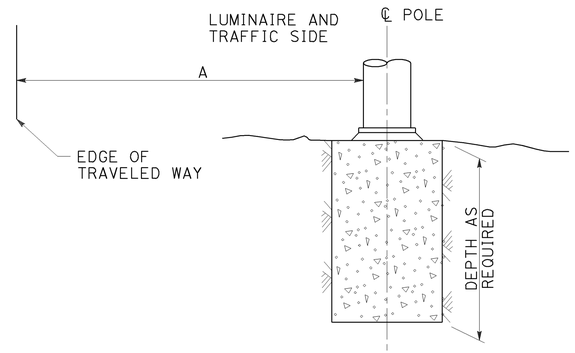

FLAT SECTIONS, CUT OR FILL SLOPES
4:1 OR FLATTER
DETAIL A-3
See Note 2

FOUNDATIONS ADJACENT TO ALL ROADWAYS EXCEPT
IN SIDEWALK, MEDIAN AND ISLAND AREAS
DETAIL A

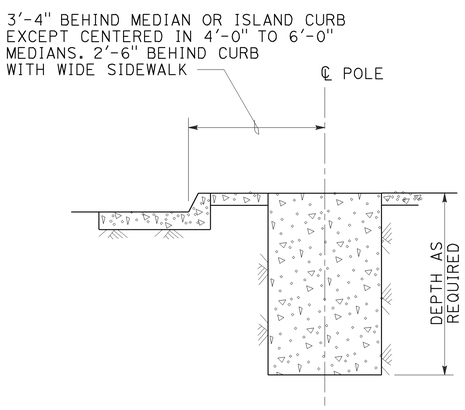

MEDIAN, ISLAND
OR WIDE SIDEWALK
DETAIL B-1
7' Wide and wider

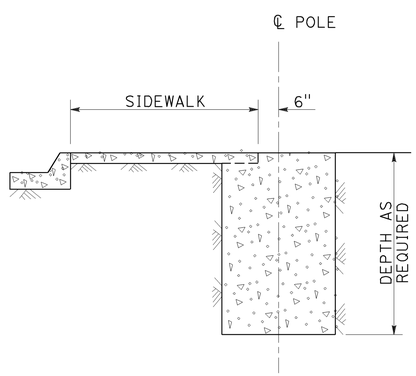

NARROW SIDEWALK
DETAIL B-2
Less than 7' wide

FOUNDATIONS IN SIDEWALK, MEDIAN AND ISLAND AREAS
DETAIL B

NOTES:

1. Where a portion of the foundation is above grade, the top edges shall have a 1" chamfer.
2. Slopes shall be horizontal to vertical ratio (Horizontal : Vertical).
3. Horizontal setbacks on cut and fill slopes steeper than 4:1 shall not exceed the distance shown for flat sections.
4. CIDH embedment depth shall be increased beyond standard depths by the diameter of the CIDH.

STATE OF CALIFORNIA
DEPARTMENT OF TRANSPORTATION

ELECTRICAL SYSTEMS (FOUNDATION INSTALLATIONS)

NO SCALE

RSP ES-11 DATED JULY 19, 2013 SUPERSEDES STANDARD PLAN ES-11
DATED MAY 20, 2011 - PAGE 488 OF THE STANDARD PLANS BOOK DATED 2010.

REVISED STANDARD PLAN RSP ES-11

2010 REVISED STANDARD PLAN RSP ES-11

7-9-13

DIST	COUNTY	ROUTE	POST MILES TOTAL PROJECT	SHEET No.	TOTAL SHEETS
04	Ala	580	R33.4	78	91

REGISTERED CIVIL ENGINEER — DATE 2-7-14

6-22-15
PLANS APPROVAL DATE

REGISTERED PROFESSIONAL ENGINEER — ISAIAS D. YALAN — No. 68269 — Exp. 9/30/15 — CIVIL — STATE OF CALIFORNIA

The State of California or its officers or agents shall not be responsible for the accuracy or completeness of electronic copies of this plan sheet.

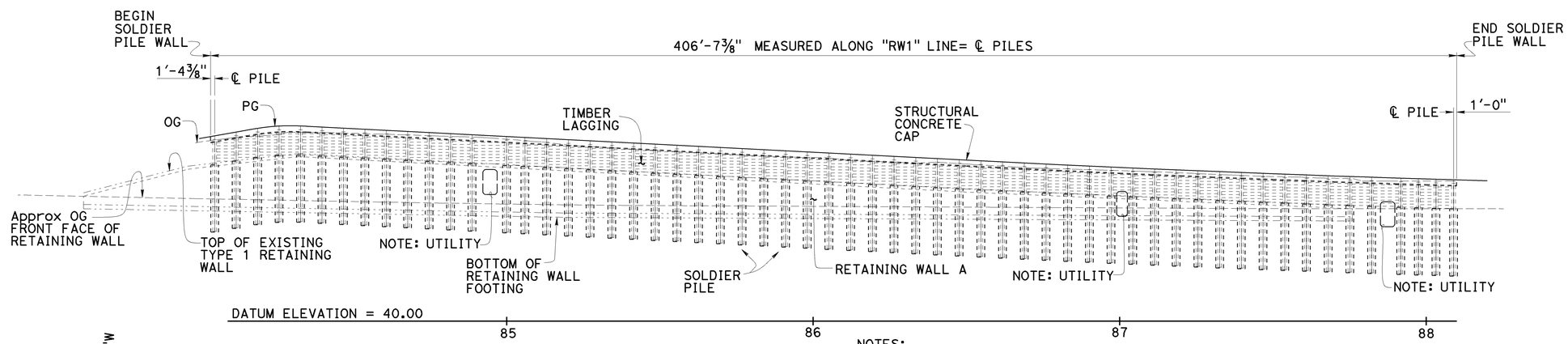

ELEVATION
1" = 20'

NOTES:
1. Existing MBGR not shown
2. Existing Retaining wall piles not shown

QUANTITIES

CONCRETE BACKFILL (SOLDIER PILE WALL)	229	CY
STEEL SOLDIER PILE (HP 14 X 117)	1,740	LF
30" DRILLED HOLE	1,257	LF
STRUCTURAL CONCRETE, CAP	55	CY
BAR REINFORCING STEEL (RETAINING WALL)	12,839	LB
TREATED TIMBER LAGGING	21	MFBM
CLEAN AND PAINT STEEL SOLDIER PILING	LUMP SUM	

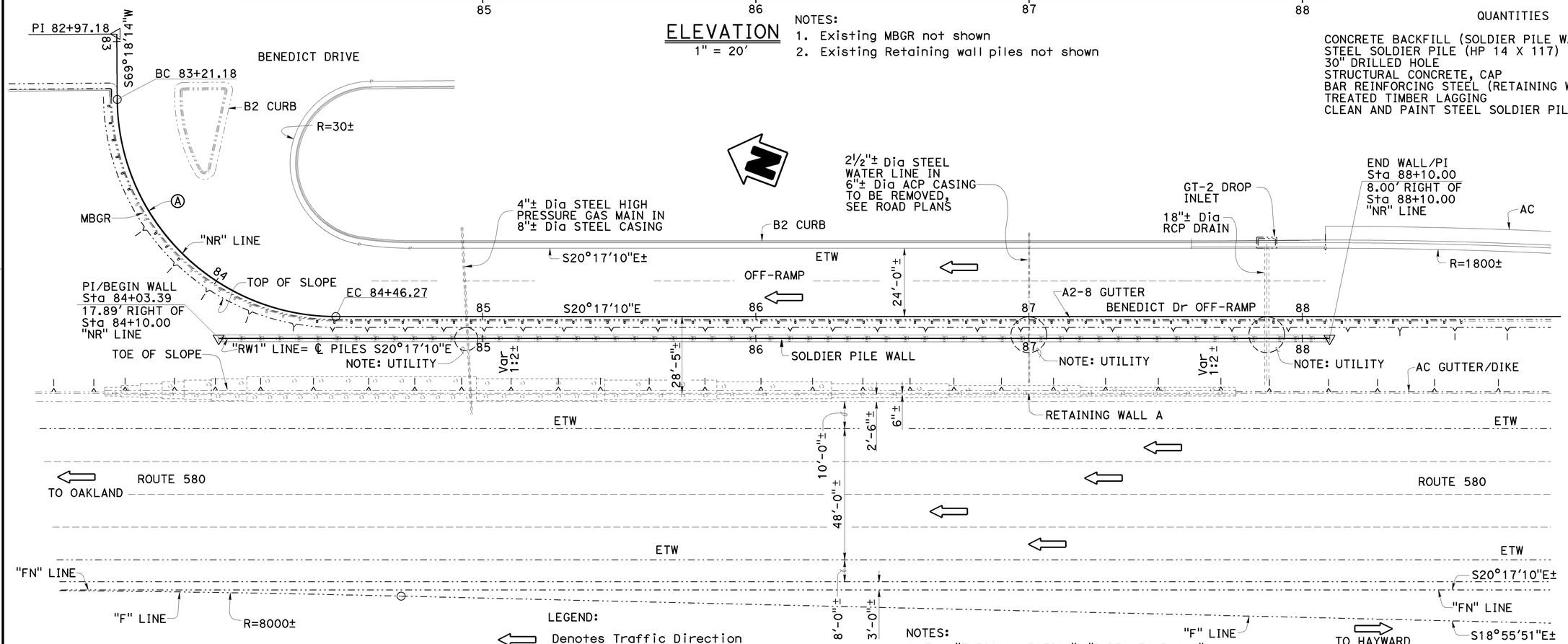

LEGEND:
- Denotes Traffic Direction
- Denotes Existing
- Denotes New Construction

PLAN
1" = 20'

NOTES:
1. For "TYPICAL SECTION", "INDEX TO PLANS", and "STANDARD PLANS LIST" see "GENERAL PLAN No. 2" sheet.
2. For "GENERAL NOTES" see "TYPICAL SECTION" sheet

UTILITY:
For utility through lagging details see "WALL DETAILS No. 2" sheet

NOTE:
THE CONTRACTOR SHALL VERIFY ALL CONTROLLING FIELD DIMENSIONS BEFORE ORDERING OR FABRICATING ANY MATERIAL.

CURVE DATA

No.	R	Δ	T	L
Ⓐ	80.00	89°35'24"	79.43	125.09

NOTE: No curve data shown for other curves.

DESIGN	BY Isaias Yalan	CHECKED M. Van De Pol	LOAD & RESISTANCE FACTOR DESIGN	LIVE LOAD SURCHARGE
DETAILS	BY M. Van De Pol/T. Fairall	CHECKED M. Van De Pol	LAYOUT	BY M. Van De Pol/T. Fairall — CHECKED I. Yalan
QUANTITIES	BY Isaias Yalan	CHECKED Nasser Tachta	SPECIFICATIONS	BY Mary Kopsa — PLANS AND SPECS COMPARED Mary Kopsa

Gordon Danke
DESIGN ENGINEER

ORIGINAL SCALE IN INCHES FOR REDUCED PLANS 0 1 2 3

STATE OF CALIFORNIA
DEPARTMENT OF TRANSPORTATION

DIVISION OF ENGINEERING SERVICES
STRUCTURE DESIGN
DESIGN BRANCH 9

BRIDGE NO. 33E0225
POST MILE 33.40

BENEDICT DRIVE SOLDIER PILE WALL
GENERAL PLAN No. 1

UNIT: 3594
PROJECT NUMBER & PHASE: 04120000091
CONTRACT NO.: 04-2G8604

DISREGARD PRINTS BEARING EARLIER REVISION DATES

REVISION DATES: 5-24-13 | 12-31-13 | 2-07-14

SHEET 1 OF 14

USERNAME => s114701 DATE PLOTTED => 01-APR-2014 TIME PLOTTED => 13:21

Dist	COUNTY	ROUTE	POST MILES TOTAL PROJECT	SHEET No.	TOTAL SHEETS
04	Ala	580	R33.4	79	91

REGISTERED CIVIL ENGINEER — DATE 2-7-14

6-22-15
PLANS APPROVAL DATE

REGISTERED PROFESSIONAL ENGINEER — ISAIAS D. YALAN — No. 68269 — Exp. 9/30/15 — CIVIL — STATE OF CALIFORNIA

The State of California or its officers or agents shall not be responsible for the accuracy or completeness of scanned copies of this plan sheet.

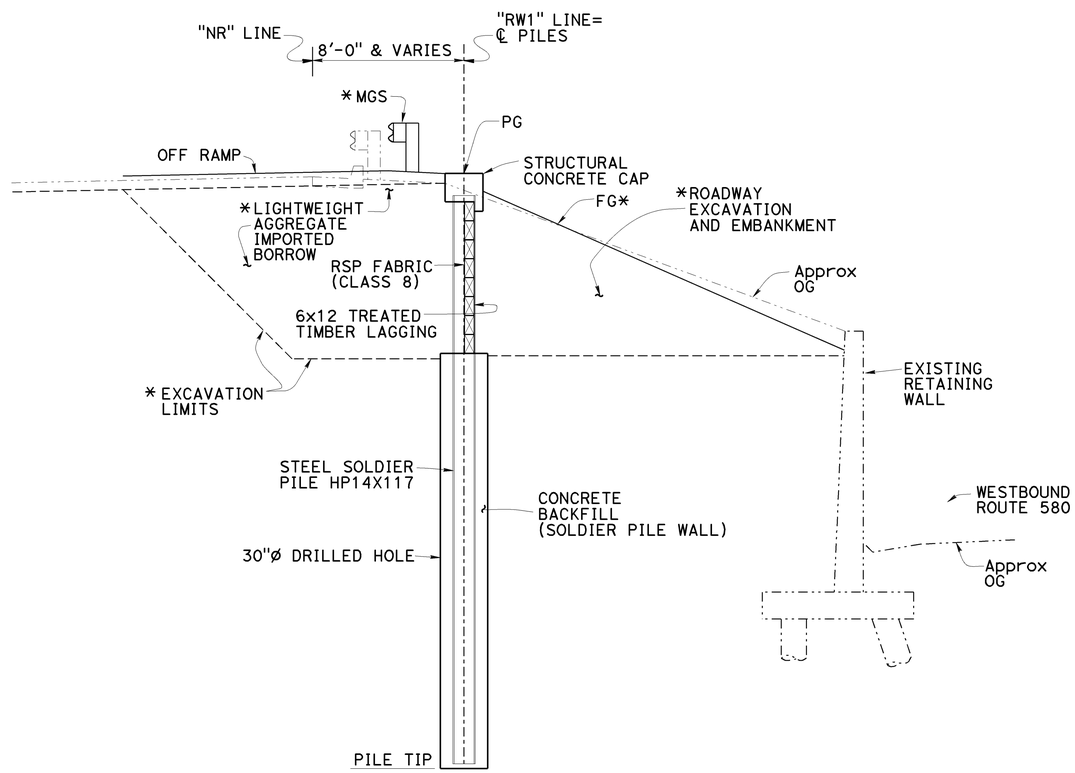

TYPICAL SECTION

1/4" = 1'-0"

LEGEND:
- Denotes Existing
- Denotes New Construction
- * See "Road Plans"

INDEX TO PLANS

SHEET No.	TITLE
1	GENERAL PLAN No. 1
2	GENERAL PLAN No. 2
3	STRUCTURE PLAN No. 1
4	STRUCTURE PLAN No. 2
5	FOUNDATION PLAN
6	STAGE CONSTRUCTION No. 1
7	STAGE CONSTRUCTION No. 2 AND No. 3
8	STAGE CONSTRUCTION No. 4
9	TYPICAL SECTION
10	WALL DETAILS No. 1
11	WALL DETAILS No. 2
12	LOG OF TEST BORINGS 1 OF 3
13	LOG OF TEST BORINGS 2 OF 3
14	LOG OF TEST BORINGS 3 OF 3

STANDARD PLANS 2010

A10A	ABBREVIATIONS (SHEET 1 OF 2)
RSP A10B	ABBREVIATIONS (SHEET 2 OF 2)
A10C	LINES AND SYMBOLS (SHEET 1 OF 3)
A10D	LINES AND SYMBOLS (SHEET 2 OF 3)
A10E	LINES AND SYMBOLS (SHEET 3 OF 3)
A10F	LEGEND - SOIL (SHEET 1 OF 2)
A10G	LEGEND - SOIL (SHEET 2 OF 2)
A10H	LEGEND - ROCK

STANDARD PLAN SHEET No.

DETAIL No.

NOTE:
THE CONTRACTOR SHALL VERIFY ALL CONTROLLING FIELD DIMENSIONS BEFORE ORDERING OR FABRICATING ANY MATERIAL.

Gordon Danke
DESIGN ENGINEER

	BY	CHECKED			
DESIGN	Isaias Yalan	M. Van De Pol	LOAD & RESISTANCE FACTOR DESIGN	LIVE LOADING: LIVE LOAD SURCHARGE	
DETAILS	M. Van De Pol/T. Fairall	M. Van De Pol	LAYOUT	Mike Van De Pol	Isaias Yalan
QUANTITIES	Isaias Yalan	Nasser Tachta	SPECIFICATIONS	Mary Kopsa	Mary Kopsa

ORIGINAL SCALE IN INCHES FOR REDUCED PLANS 0 1 2 3

STATE OF CALIFORNIA
DEPARTMENT OF TRANSPORTATION

DIVISION OF ENGINEERING SERVICES
STRUCTURE DESIGN
DESIGN BRANCH 9

BRIDGE No. 33E0225
POST MILE 33.40

BENEDICT DRIVE SOLDIER PILE WALL
GENERAL PLAN No. 2

UNIT: 3594
PROJECT NUMBER & PHASE: 04120000091
CONTRACT No.: 04-2G8604

DISREGARD PRINTS BEARING EARLIER REVISION DATES

REVISION DATES: 6-19-13 12-31-13 2-06-14

SHEET 2 OF 14

USERNAME => s114701 DATE PLOTTED => 01-APR-2014 TIME PLOTTED => 13:21

STRUCTURES DESIGN GENERAL PLAN SHEET (ENGLISH) (REV.09-01-10)

FILE => 30e0225-a-gp02.dgn

DIST	COUNTY	ROUTE	POST MILES TOTAL PROJECT	SHEET No.	TOTAL SHEETS
04	Ala	580	R33.4	80	91

REGISTERED CIVIL ENGINEER — DATE 2-7-14

6-22-15
PLANS APPROVAL DATE

REGISTERED PROFESSIONAL ENGINEER — ISAIAS D. YALAN — No. 68269 — Exp. 9/30/15 — CIVIL — STATE OF CALIFORNIA

The State of California or its officers or agents shall not be responsible for the accuracy or completeness of scanned copies of this plan sheet.

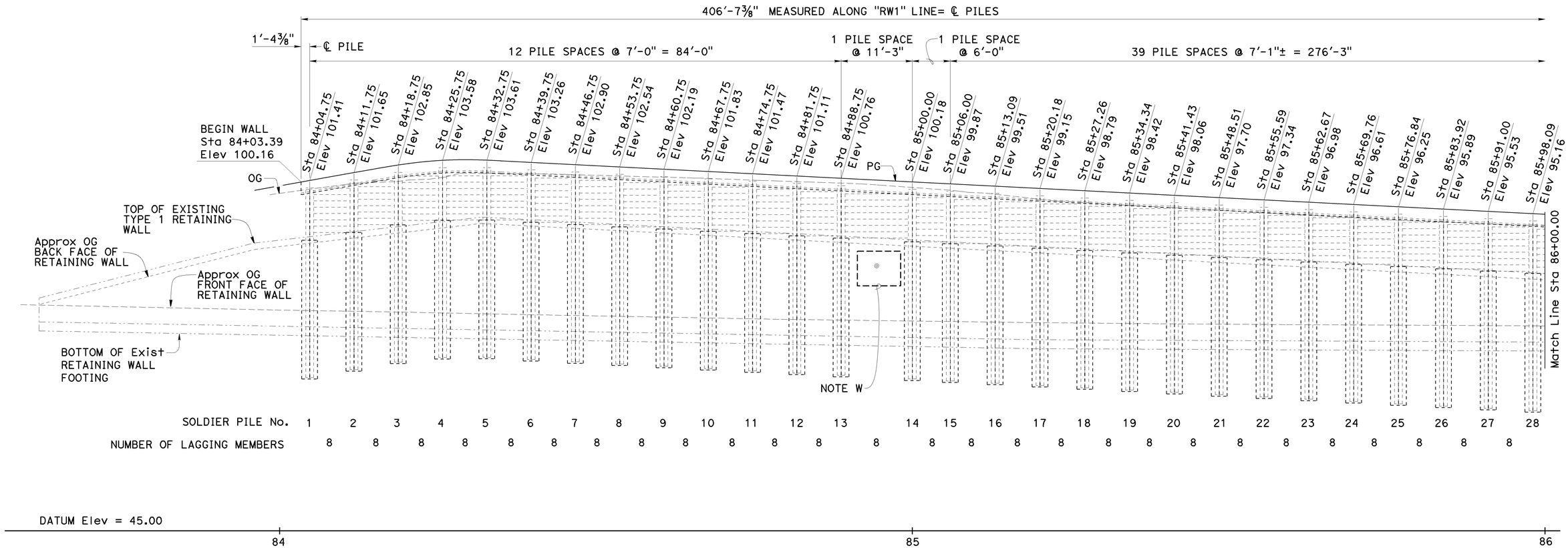

ELEVATION

⅛" = 1'-0

LEGEND:
-·-·-·- Denotes Existing
——— Denotes New Construction

NOTES:
1. MGS not shown
2. Existing retaining wall piles not shown
3. Station/elevation called out at PI centerline of drilled hole and "RW1" LINE at top of structural concrete cap

NOTE W:
Approximate location of existing 4" Dia steel high pressure gas main in 8" Dia steel casing:
Sta 84+94.50± "RW1" Line
Elevation = 87.22± ft

For utility through lagging details see "WALL DETAILS No. 2" sheet

NOTE:
THE CONTRACTOR SHALL VERIFY ALL CONTROLLING FIELD DIMENSIONS BEFORE ORDERING OR FABRICATING ANY MATERIAL.

	BY	CHECKED
DESIGN	Isaias Yalan	M. Van De Pol
DETAILS	Tim Fairall	M. Van De Pol
QUANTITIES	Isaias Yalan	Nasser Tachta

STATE OF CALIFORNIA
DEPARTMENT OF TRANSPORTATION

DIVISION OF ENGINEERING SERVICES
STRUCTURE DESIGN
DESIGN BRANCH 9

BRIDGE No. 33E0225
POST MILE 33.40

BENEDICT DRIVE SOLDIER PILE WALL
STRUCTURE PLAN No. 1

STRUCTURES DESIGN DETAIL SHEET (ENGLISH) (REV. 09-01-10)

ORIGINAL SCALE IN INCHES FOR REDUCED PLANS 0 1 2 3

UNIT: 3594
PROJECT NUMBER & PHASE: 04120000091
CONTRACT No.: 04-2G8604

DISREGARD PRINTS BEARING EARLIER REVISION DATES

REVISION DATES: 5-31-13 12-31-13 2-06-14

SHEET 3 OF 14

FILE => 30e0225-c-sp01.dgn

USERNAME => s114701 DATE PLOTTED => 01-APR-2014 TIME PLOTTED => 13:21

DIST	COUNTY	ROUTE	POST MILES TOTAL PROJECT	SHEET No.	TOTAL SHEETS
04	Ala	580	R33.4	81	91

REGISTERED CIVIL ENGINEER — DATE 2-7-14

6-22-15
PLANS APPROVAL DATE

REGISTERED PROFESSIONAL ENGINEER — ISAIAS D. YALAN — No. 68269 — Exp. 9/30/15 — CIVIL — STATE OF CALIFORNIA

The State of California or its officers or agents shall not be responsible for the accuracy or completeness of scanned copies of this plan sheet.

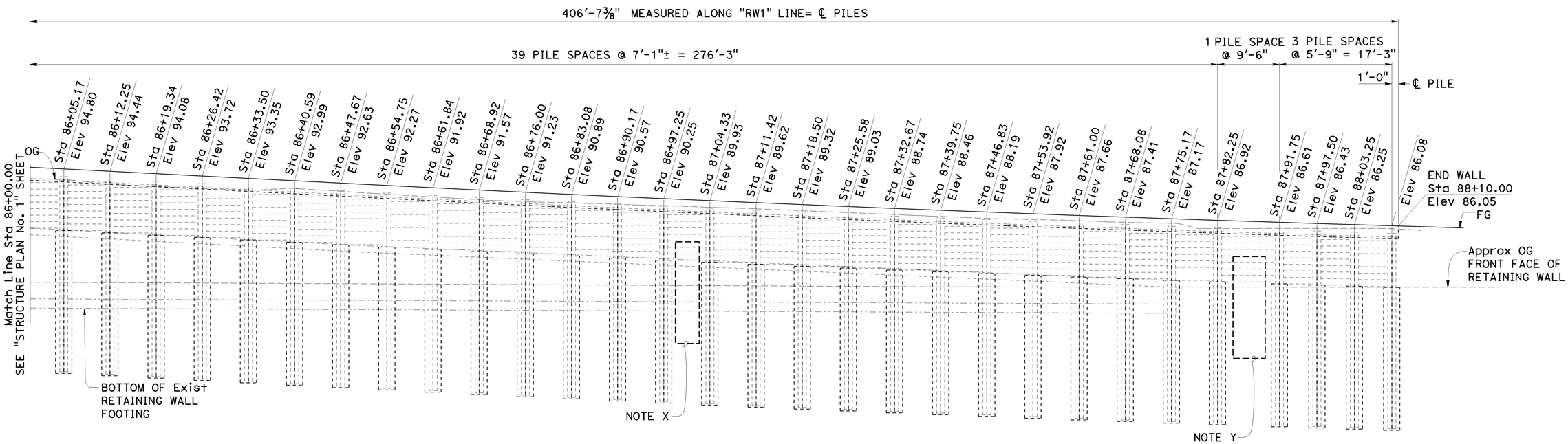

LEGEND:
- Denotes Existing
- Denotes New Construction

ELEVATION
⅛" = 1'-0

NOTES:
1. MGS not shown
2. Existing retaining wall piles not shown
3. Station/elevation called out at PI centerline of drilled hole and "RW1" LINE at top of structural concrete cap

NOTE X:
Approximate location of existing 2½" Dia steel water line in 6" Dia ACP casing. To be removed, see "Road Plans"

NOTE Y:
Approximate location of existing 18" Dia RCP drain. For utility through lagging details see "WALL DETAILS No. 2" sheet

NOTE:
THE CONTRACTOR SHALL VERIFY ALL CONTROLLING FIELD DIMENSIONS BEFORE ORDERING OR FABRICATING ANY MATERIAL.

	BY	CHECKED
DESIGN	Isaias Yalan	M. Van De Pol
DETAILS	Tim Fairall	M. Van De Pol
QUANTITIES	Isaias Yalan	Nasser Tachta

STATE OF CALIFORNIA
DEPARTMENT OF TRANSPORTATION

DIVISION OF ENGINEERING SERVICES
STRUCTURE DESIGN
DESIGN BRANCH 9

BRIDGE No. 33E0225
POST MILE 33.40

BENEDICT DRIVE SOLDIER PILE WALL
STRUCTURE PLAN No. 2

STRUCTURES DESIGN DETAIL SHEET (ENGLISH) (REV. 09-01-10)

ORIGINAL SCALE IN INCHES FOR REDUCED PLANS 0 1 2 3

UNIT: 3594
PROJECT NUMBER & PHASE: 04120000091
CONTRACT No.: 04-2G8604

DISREGARD PRINTS BEARING EARLIER REVISION DATES

REVISION DATES: 5-31-13 10-31-13

SHEET 4 OF 14

FILE => 30e0225-c-sp02.dgn

USERNAME => s114701 DATE PLOTTED => 01-APR-2014 TIME PLOTTED => 13:21

DIST	COUNTY	ROUTE	POST MILES TOTAL PROJECT	SHEET No.	TOTAL SHEETS
04	Ala	580	R33.4	82	91

REGISTERED CIVIL ENGINEER — DATE 2-7-14

6-22-15
PLANS APPROVAL DATE

REGISTERED PROFESSIONAL ENGINEER — ISAIAS YALAN — No. 68269 — Exp. 9/30/15 — CIVIL — STATE OF CALIFORNIA

The State of California or its officers or agents shall not be responsible for the accuracy or completeness of electronic copies of this plan sheet.

CURVE DATA

No.	R	Δ	T	L
Ⓐ	80.00	89°35'24"	79.43	125.09

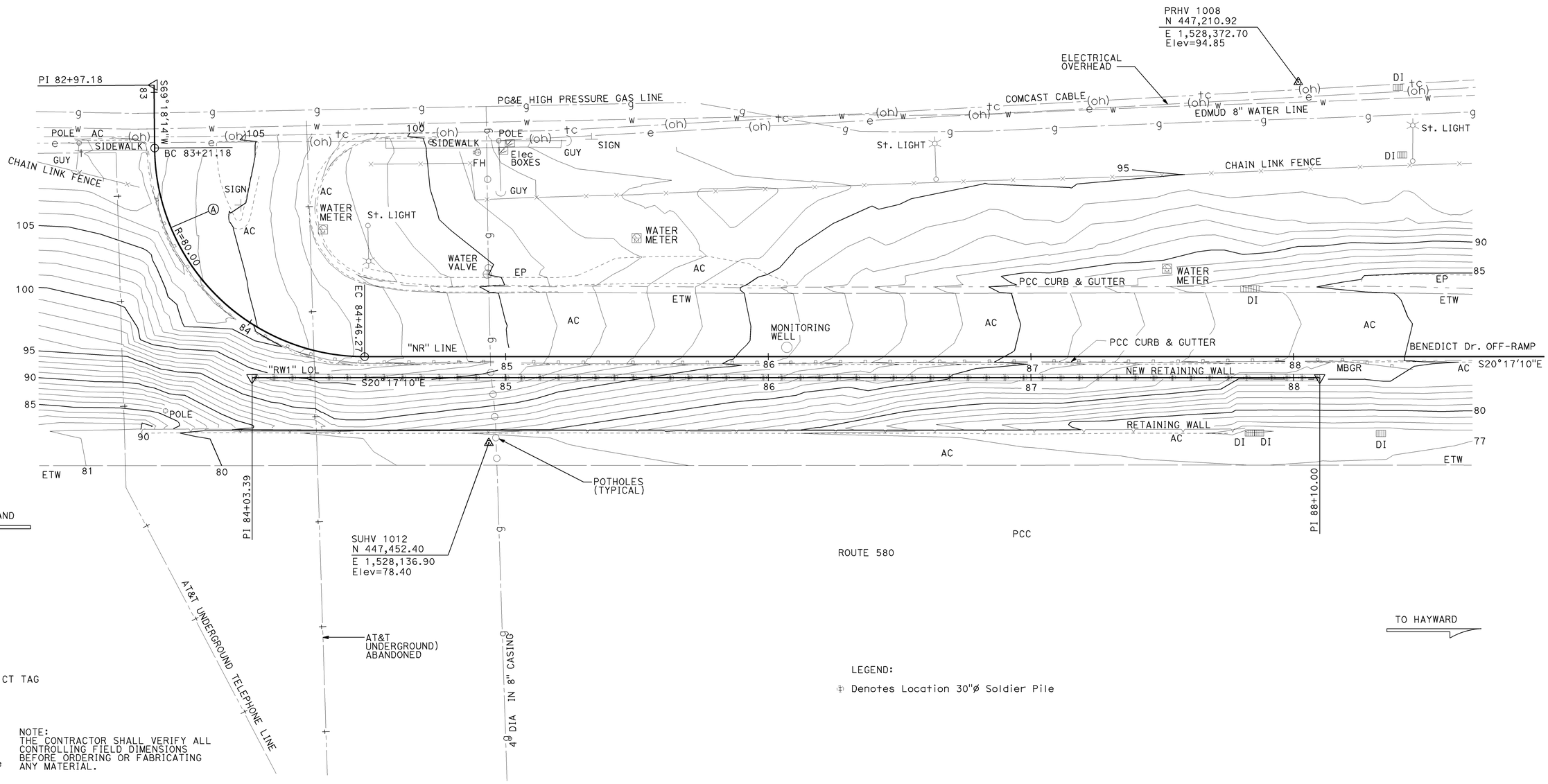

SURVEY CONTROL

SUHV 1012
Fnd SET P.K. WITH CT TAG
32.87' Rt "NR" Line
Sta 84+93.58
N 447,452.40
E 1,528,136.90
Elev=78.40

PRHV 1008
Fnd MINI DISC
104.58' Lt "NR" Line
Sta 88+01.83
N 447,210.92
E 1,528,372.70
Elev=94.85

NOTE:
THE CONTRACTOR SHALL VERIFY ALL CONTROLLING FIELD DIMENSIONS BEFORE ORDERING OR FABRICATING ANY MATERIAL.

NOTE: ALL UTILITY LINES ARE PER DISTRICT UTILITY PLAN

LEGEND:
⊕ Denotes Location 30"ø Soldier Pile

PRELIMINARY INVESTIGATION SECTION

SCALE	VERT.DATUM NAVD88	PHOTOGRAMMETRY AS OF: X			
1"=20'	HORZ.DATUM NAD83	SURVEYED	BY X	CHECKED	BY DON IVY 06/2013
ALIGNMENT TIES Dist. Traverse Sheet		DRAFTED	BY SHARON ZHENG 06/2013	CHECKED	BY SANG SOU 06/2013

DESIGN	BY Isaias Yalan	CHECKED	M. Van De Pol
DETAILS	BY Tim Fariall	CHECKED	M. Van De Pol
QUANTITIES	BY Isaias Yalan	CHECKED	Nasser Tachta

STATE OF CALIFORNIA
DEPARTMENT OF TRANSPORTATION

DIVISION OF ENGINEERING SERVICES
STRUCTURE DESIGN
DESIGN BRANCH 9

BRIDGE NO. 33E0225
POST MILE 33.40

BENEDICT DRIVE SOLDIER PILE WALL
FOUNDATION PLAN

STRUCTURES FOUNDATION PLAN SHEET (ENGLISH) (REV. 09-01-10)

ORIGINAL SCALE IN INCHES FOR REDUCED PLANS 0 1 2 3

UNIT: 3646
PROJECT NUMBER & PHASE: 04 1200 0009 1 CONTRACT NO.: 04-2G8604

DISREGARD PRINTS BEARING EARLIER REVISION DATES

REVISION DATES 6/28/13 11/12/13 01/10/14 — SHEET 5 OF 14

FILE => 30e0225-e-fp.dgn

USERNAME => s114701 DATE PLOTTED => 01-APR-2014 TIME PLOTTED => 13:23

DIST	COUNTY	ROUTE	POST MILES TOTAL PROJECT	SHEET No.	TOTAL SHEETS
04	Ala	580	R33.4	83	91

REGISTERED CIVIL ENGINEER 2-7-14 DATE

6-22-15
PLANS APPROVAL DATE

REGISTERED PROFESSIONAL ENGINEER
ISAIAS D. YALAN
No. 68269
Exp. 9/30/15
CIVIL
STATE OF CALIFORNIA

The State of California or its officers or agents shall not be responsible for the accuracy or completeness of scanned copies of this plan sheet.

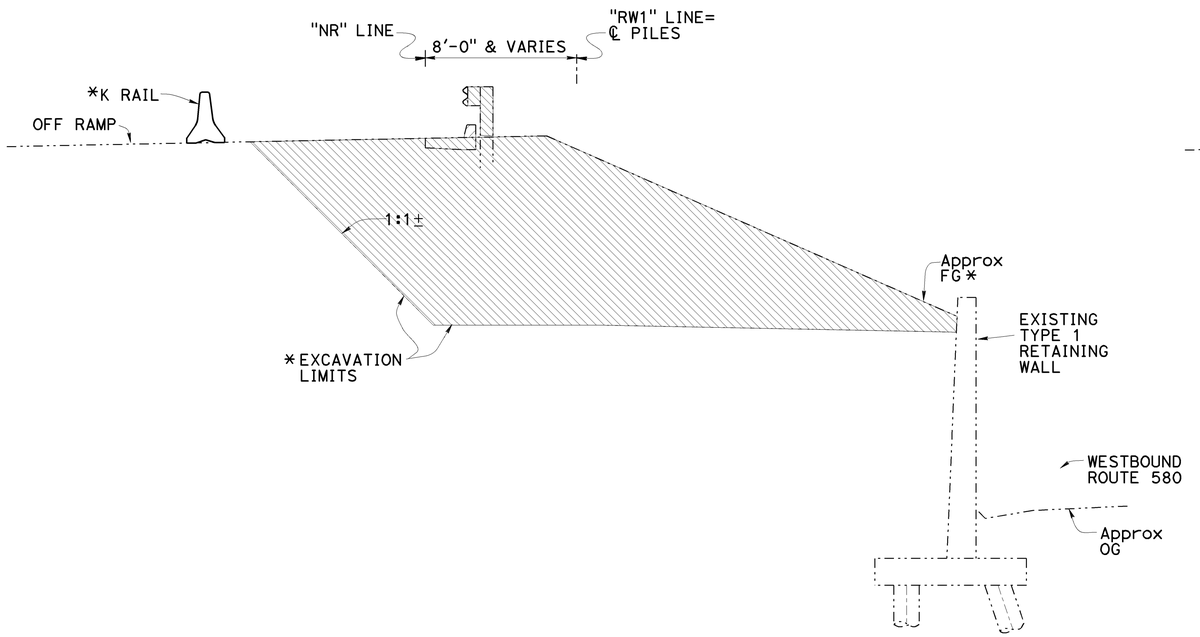

REMOVAL/EXCAVATION
STAGE 1
1/4" = 1'-0"

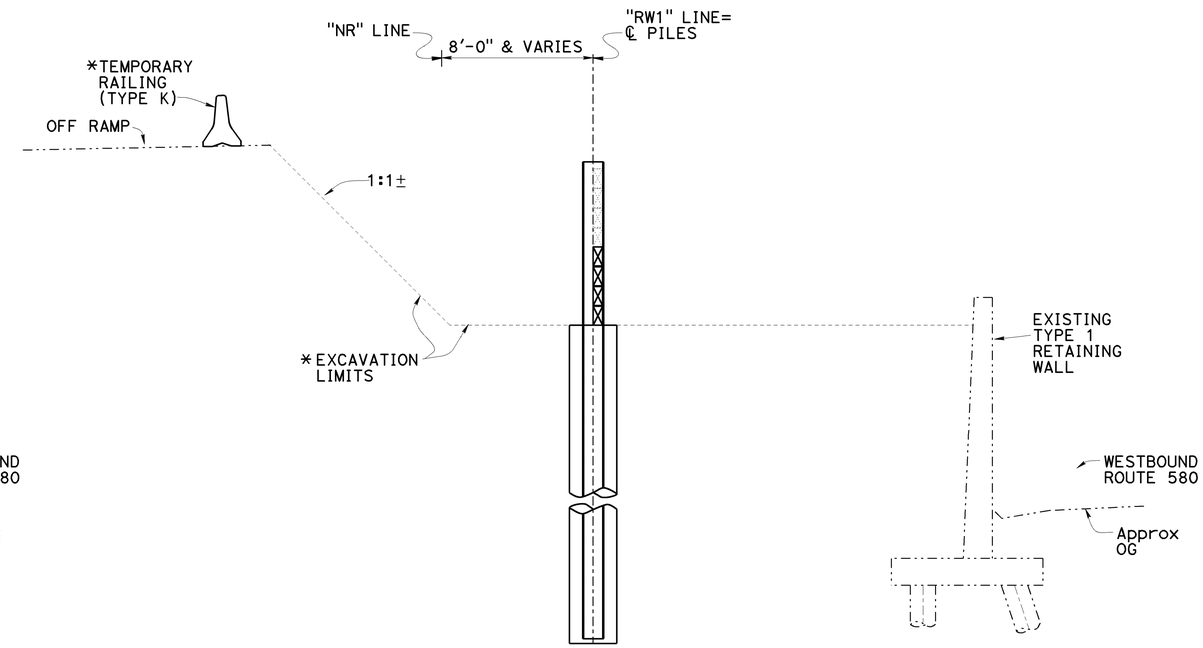

CONSTRUCTION
STAGE 1
1/4" = 1'-0"

NOTE:
Drill holes, place soldier pile and backfill around piles with concrete backfill

LEGEND:
Denotes Existing
Denotes New Construction
* See "Road Plans"
DENOTES APPROXIMATE LIMITS OF REMOVAL/ROADWAY EXCAVATION

NOTE: These construction stages only apply to the structure plans

NOTE:
THE CONTRACTOR SHALL VERIFY ALL CONTROLLING FIELD DIMENSIONS BEFORE ORDERING OR FABRICATING ANY MATERIAL.

	BY	CHECKED
DESIGN	Isaias Yalan	M. Van De Pol
DETAILS	Tim Fairall	M. Van De Pol
QUANTITIES	Isaias Yalan	Nasser Tachta

STATE OF CALIFORNIA
DEPARTMENT OF TRANSPORTATION

DIVISION OF ENGINEERING SERVICES
STRUCTURE DESIGN
DESIGN BRANCH 9

BRIDGE No. 33E0225
POST MILE 33.40

BENEDICT DRIVE SOLDIER PILE WALL
STAGE CONSTRUCTION No. 1

STRUCTURES DESIGN DETAIL SHEET (ENGLISH) (REV. 09-01-10)

ORIGINAL SCALE IN INCHES FOR REDUCED PLANS 0 1 2 3

UNIT: 3594
PROJECT NUMBER & PHASE: 04120000091
CONTRACT No.: 04-2G8604

DISREGARD PRINTS BEARING EARLIER REVISION DATES

REVISION DATES: 6-19-13 | 11-18-13 | 02-6-14

SHEET 6 OF 14

FILE => 30e0225-f-stg01.dgn

USERNAME => s114701 DATE PLOTTED => 01-APR-2014 TIME PLOTTED => 13:22

DIST	COUNTY	ROUTE	POST MILES TOTAL PROJECT	SHEET No.	TOTAL SHEETS
04	Ala	580	R33.4	84	91

REGISTERED CIVIL ENGINEER 2-7-14 DATE

6-22-15
PLANS APPROVAL DATE

REGISTERED PROFESSIONAL ENGINEER
ISAIAS D. YALAN
No. 68269
Exp. 9/30/15
CIVIL
STATE OF CALIFORNIA

The State of California or its officers or agents shall not be responsible for the accuracy or completeness of scanned copies of this plan sheet.

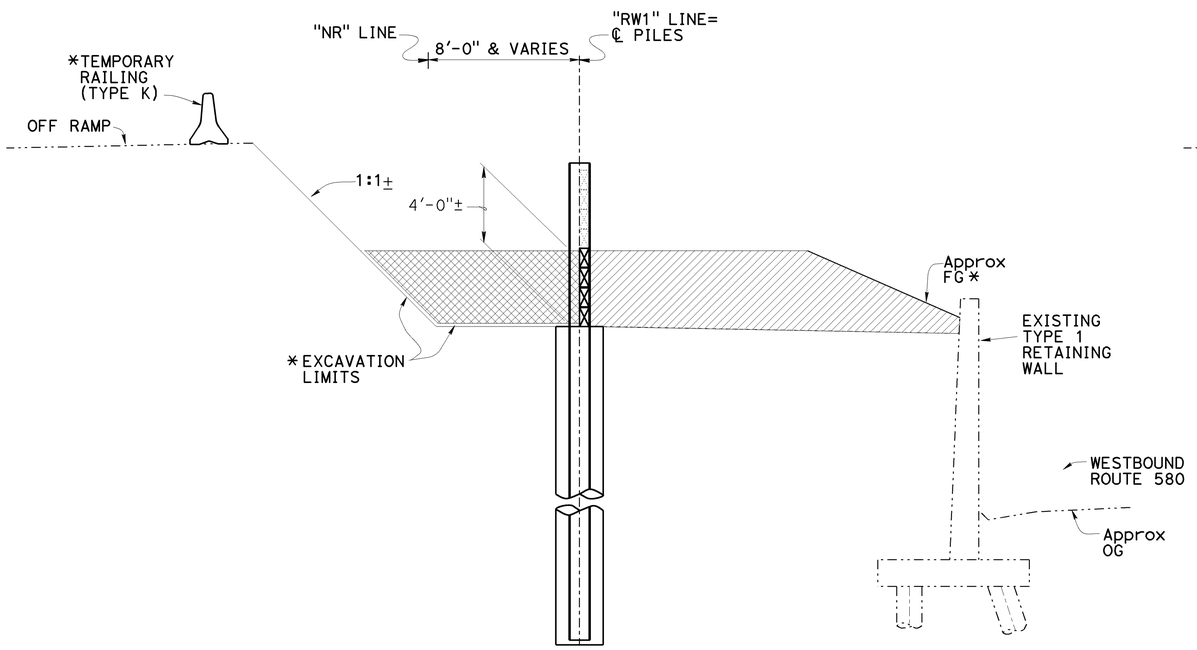

CONSTRUCTION
STAGE 2
1/4" = 1'-0"

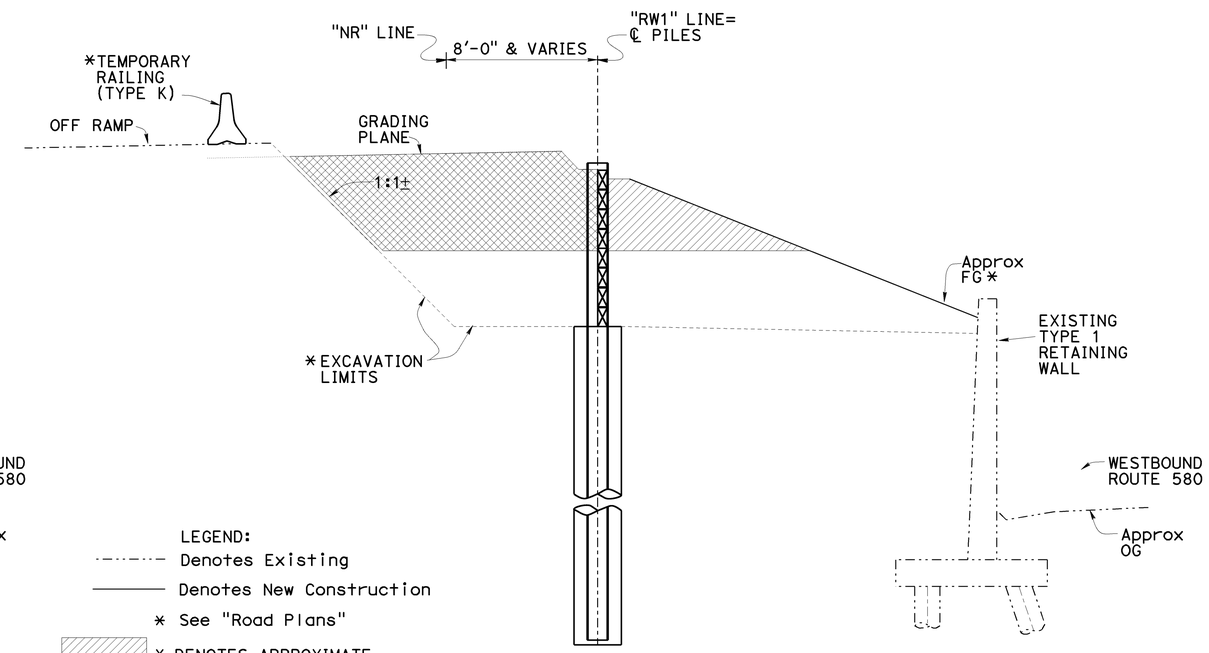

CONSTRUCTION
STAGE 3
1/4" = 1'-0"

LEGEND:
Denotes Existing
Denotes New Construction
* See "Road Plans"
* DENOTES APPROXIMATE LIMITS OF EMBANKMENT
* DENOTES APPROXIMATE LIMITS OF LIGHTWEIGHT AGGREGATE IMPORTED BORROW

NOTE:
THE CONTRACTOR SHALL VERIFY ALL CONTROLLING FIELD DIMENSIONS BEFORE ORDERING OR FABRICATING ANY MATERIAL.

NOTE: These construction stages only apply to the structure plans

	BY	CHECKED
DESIGN	Isaias Yalan	M. Van De Pol
DETAILS	Tim Fairall	M. Van De Pol
QUANTITIES	Isaias Yalan	Nasser Tachta

STATE OF CALIFORNIA
DEPARTMENT OF TRANSPORTATION

DIVISION OF ENGINEERING SERVICES
STRUCTURE DESIGN
DESIGN BRANCH 9

BRIDGE No. 33E0225
POST MILE 33.40

BENEDICT DRIVE SOLDIER PILE WALL
STAGE CONSTRUCTION No. 2 AND No. 3

STRUCTURES DESIGN DETAIL SHEET (ENGLISH) (REV. 09-01-10)

ORIGINAL SCALE IN INCHES FOR REDUCED PLANS 0 1 2 3

UNIT: 3594
PROJECT NUMBER & PHASE: 04120000091
CONTRACT No.: 04-2G8604

DISREGARD PRINTS BEARING EARLIER REVISION DATES

REVISION DATES: 6-19-13 12-31-13 02-6-14

SHEET 7 OF 14

FILE => 30e0225-f-stg02.dgn

USERNAME => s114701 DATE PLOTTED => 01-APR-2014 TIME PLOTTED => 13:22

DIST	COUNTY	ROUTE	POST MILES TOTAL PROJECT	SHEET No.	TOTAL SHEETS
04	Ala	580	R33.4	85	91

REGISTERED CIVIL ENGINEER 2-7-14 DATE

6-22-15
PLANS APPROVAL DATE

REGISTERED PROFESSIONAL ENGINEER
ISAIAS D. YALAN
No. 68269
Exp. 9/30/15
CIVIL
STATE OF CALIFORNIA

The State of California or its officers or agents shall not be responsible for the accuracy or completeness of scanned copies of this plan sheet.

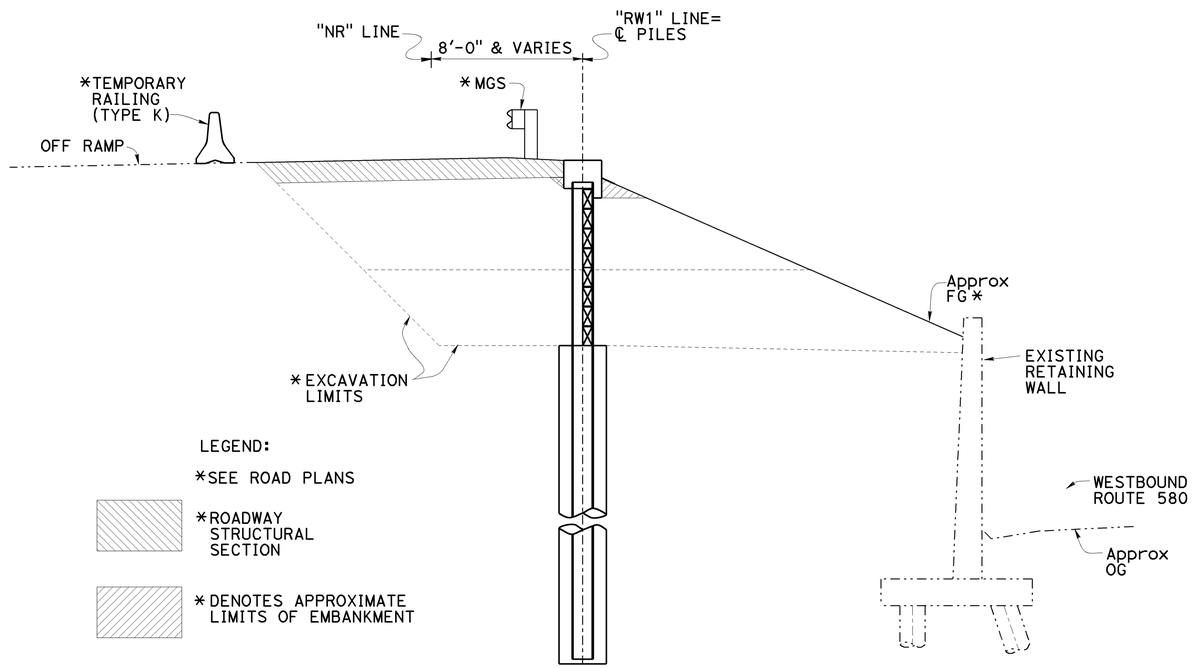

LEGEND:

*SEE ROAD PLANS

*ROADWAY STRUCTURAL SECTION

*DENOTES APPROXIMATE LIMITS OF EMBANKMENT

* DENOTES APPROXIMATE LIMITS OF LIGHTWEIGHT AGGREGATE IMPORTED BORROW

CONSTRUCTION STAGE 4

1/4" = 1'-0"

NOTE:
1. Complete structural concrete cap.
2. Complete roadway structure section, overlay and MGS see "Roadway Plans"
3. These construction stages only apply to the structure plans

LEGEND:
-·-·-·- Denotes Existing
——— Denotes New Construction
* See "Road Plans"

NOTE:
THE CONTRACTOR SHALL VERIFY ALL CONTROLLING FIELD DIMENSIONS BEFORE ORDERING OR FABRICATING ANY MATERIAL.

	BY	CHECKED
DESIGN	Isaias Yalan	M. Van De Pol
DETAILS	Tim Fairall	M. Van De Pol
QUANTITIES	Isaias Yalan	Nasser Tachta

STATE OF CALIFORNIA
DEPARTMENT OF TRANSPORTATION

DIVISION OF ENGINEERING SERVICES
STRUCTURE DESIGN
DESIGN BRANCH 9

BRIDGE No. 33E0225
POST MILE 33.40

BENEDICT DRIVE SOLDIER PILE WALL
STAGE CONSTRUCTION No. 4

STRUCTURES DESIGN DETAIL SHEET (ENGLISH) (REV. 09-01-10)

ORIGINAL SCALE IN INCHES FOR REDUCED PLANS 0 1 2 3

UNIT: 3594
PROJECT NUMBER & PHASE: 04120000091
CONTRACT No.: 04-2G8604

DISREGARD PRINTS BEARING EARLIER REVISION DATES

REVISION DATES: 6-19-13 12-31-13 02-6-14

SHEET 8 OF 14

FILE => 30e0225-f-stg03.dgn

USERNAME => s114701 DATE PLOTTED => 01-APR-2014 TIME PLOTTED => 13:22

DIST	COUNTY	ROUTE	POST MILES TOTAL PROJECT	SHEET No.	TOTAL SHEETS
04	Ala	580	R33.4	86	91

REGISTERED CIVIL ENGINEER 2-7-14 DATE

6-22-15
PLANS APPROVAL DATE

REGISTERED PROFESSIONAL ENGINEER ISAIAS D. YALAN No. 68269 Exp. 9/30/15 CIVIL STATE OF CALIFORNIA

The State of California or its officers or agents shall not be responsible for the accuracy or completeness of scanned copies of this plan sheet.

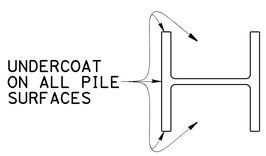

LIMITS OF CLEAN & PAINT STEEL SOLDIER PILING

1" = 1'-0"

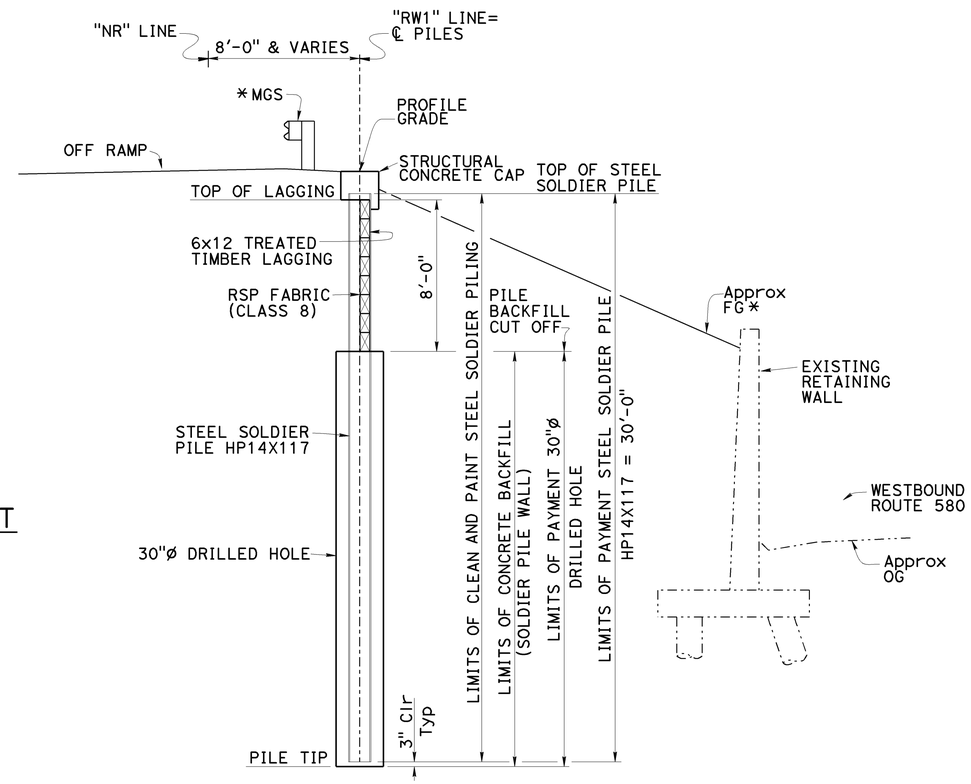

TYPICAL SECTION

¼" = 1'-0"

LEGEND:
-·-·-·- Denotes Existing
——— Denotes New Construction
* See "Road Plans"

GENERAL NOTES

DESIGN:
AASHTO LRFD Bridge Design Specifications, 4th Edition with California Amendments.

LIVE LOAD:
240 psf equivalent to 2 feet soil weight

SOIL PARAMETERS:

ACTIVE PRESSURE:

Unit Weight (γ) = 125 pcf
Cohesion (C) = 50 psf
Friction angle (ø) = 20 degree

PASSIVE PRESSURE:

Unit Weight (γ) = 125 pcf
Cohesion (C) = 50 psf
Friction angle (ø) = 30 degree

SEISMIC LOADING:
Triangular stress distribution = 38 H psf as maximum

STRUCTURAL STEEL:
ASTM A709/A709M Grade 50
fy = 50 ksi

STRUCTURAL TIMBER:
Treated Douglas Fir, Grade No. 1 or better.
Timber to be full sawn

Reinforced Concrete
fy = 60 ksi
f'c = 3.6 ksi
n = 8

NOTE:
THE CONTRACTOR SHALL VERIFY ALL CONTROLLING FIELD DIMENSIONS BEFORE ORDERING OR FABRICATING ANY MATERIAL.

DESIGN	BY Isaias Yalan	CHECKED M. Van De Pol	
DETAILS	BY Tim Fairall	CHECKED M. Van De Pol	
QUANTITIES	BY Isaias Yalan	CHECKED Nasser Tachta	

STATE OF CALIFORNIA
DEPARTMENT OF TRANSPORTATION

DIVISION OF ENGINEERING SERVICES
STRUCTURE DESIGN
DESIGN BRANCH 9

BRIDGE No. 33E0225
POST MILE 33.40

BENEDICT DRIVE SOLDIER PILE WALL
TYPICAL SECTION

STRUCTURES DESIGN DETAIL SHEET (ENGLISH) (REV. 09-01-10)

ORIGINAL SCALE IN INCHES FOR REDUCED PLANS 0 1 2 3

UNIT: 3594
PROJECT NUMBER & PHASE: 04120000091
CONTRACT No.: 04-2G8604

DISREGARD PRINTS BEARING EARLIER REVISION DATES

REVISION DATES 7-25-13 12-31-13 02-6-14

SHEET 9 OF 14

FILE => 30e0225-k-ts01.dgn

USERNAME => s114701 DATE PLOTTED => 01-APR-2014 TIME PLOTTED => 13:22

DIST	COUNTY	ROUTE	POST MILES TOTAL PROJECT	SHEET No.	TOTAL SHEETS
04	Ala	580	R33.4	87	91

REGISTERED CIVIL ENGINEER 2-7-14 DATE

6-22-15
PLANS APPROVAL DATE

REGISTERED PROFESSIONAL ENGINEER ISAIAS D. YALAN No. 68269 Exp. 9/30/15 CIVIL STATE OF CALIFORNIA

The State of California or its officers or agents shall not be responsible for the accuracy or completeness of scanned copies of this plan sheet.

DIMENSION:	"A"
BEGIN SOLDIER PILE WALL	1'-4⅜"
END SOLDIER PILE WALL	1'-0"

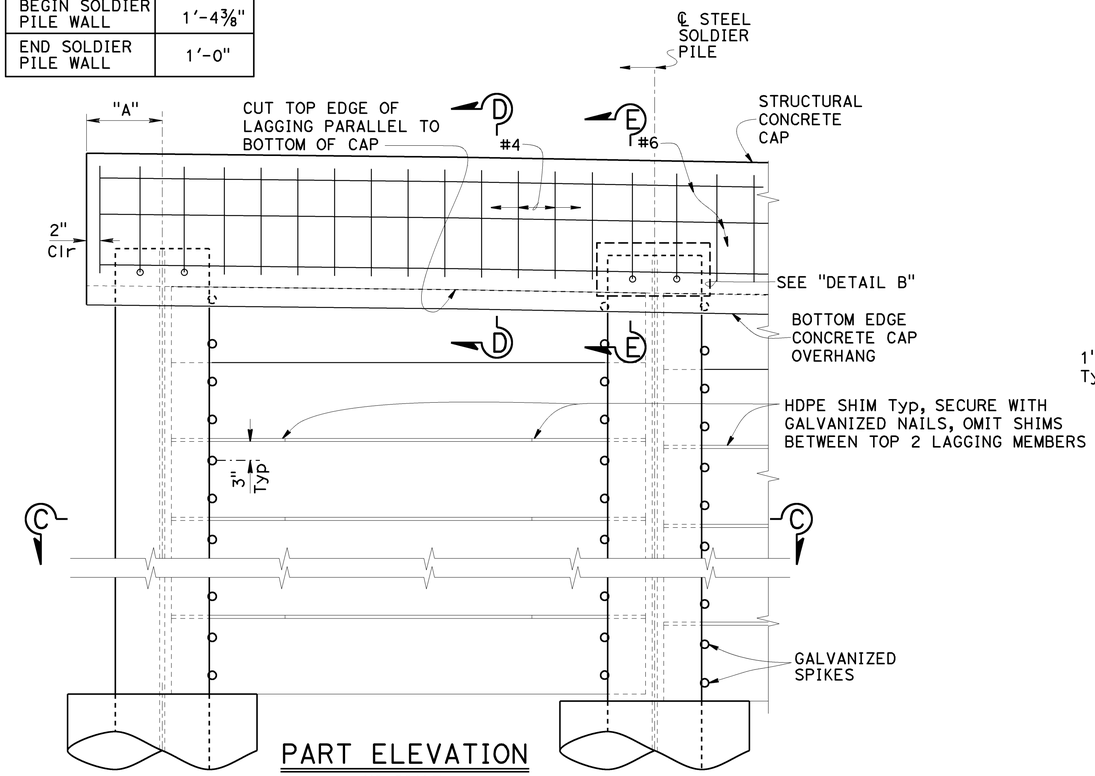

PART ELEVATION
NO SCALE

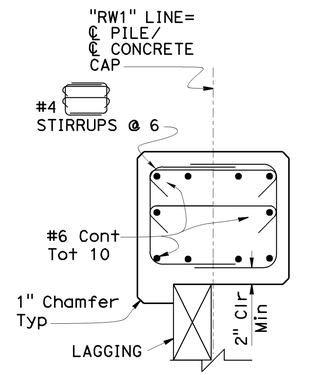

SECTION D-D
1" = 1'-0"

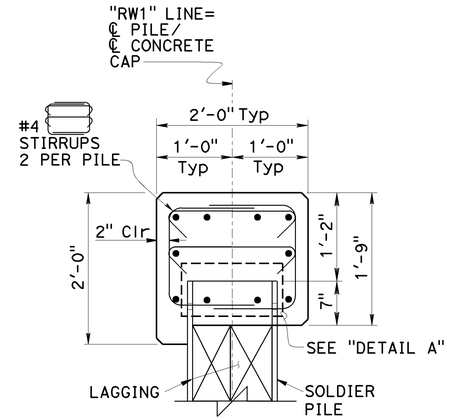

SECTION E-E
1" = 1'-0"

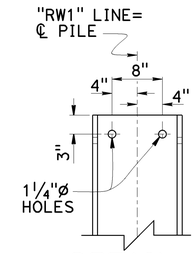

DETAIL A
1" = 1'-0"

NOTE:
Holes for continuous #6 placement

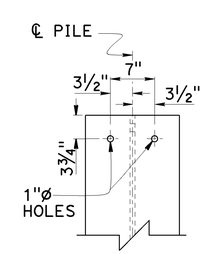

DETAIL B
1" = 1'-0"

NOTE:
Holes for #4 stirrups placement

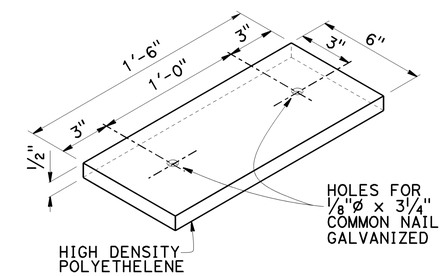

HDPE SHIM DETAIL
NO SCALE

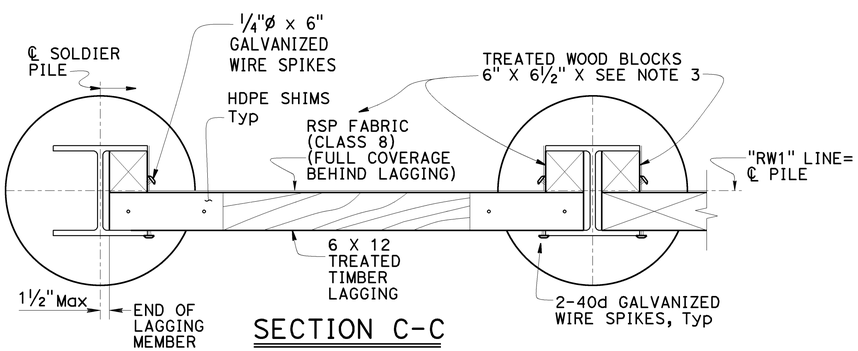

SECTION C-C
NO SCALE

NOTES:

1. No clipping of timber lagging corners allowed
2. Spikes shall not be bent
3. Length varies with location. Cut and place vertical blocks to fill gap behind horizontal lagging members and flange of H pile. Retain with ¼"Ø x 6" galvanized wire spikes.

	BY	CHECKED
DESIGN	Isaias Yalan	M. Van De Pol
DETAILS	Tim Fairall	M. Van De Pol
QUANTITIES	Isaias Yalan	Nasser Tachta

STATE OF CALIFORNIA
DEPARTMENT OF TRANSPORTATION

DIVISION OF ENGINEERING SERVICES
STRUCTURE DESIGN
DESIGN BRANCH 9

BRIDGE No. 33E0225
POST MILE 33.40

BENEDICT DRIVE SOLDIER PILE WALL
WALL DETAILS No. 1

STRUCTURES DESIGN DETAIL SHEET (ENGLISH) (REV. 09-01-10)

ORIGINAL SCALE IN INCHES FOR REDUCED PLANS 0 1 2 3

UNIT: 3594
PROJECT NUMBER & PHASE: 04120000091
CONTRACT No.: 04-2G8604

DISREGARD PRINTS BEARING EARLIER REVISION DATES

REVISION DATES 5-31-13

SHEET 10 OF 14

FILE => 30e0225-1-det01.dgn

USERNAME => s114701 DATE PLOTTED => 01-APR-2014 TIME PLOTTED => 13:22

DIST	COUNTY	ROUTE	POST MILES TOTAL PROJECT	SHEET No.	TOTAL SHEETS
04	Ala	580	R33.4	88	91

REGISTERED CIVIL ENGINEER 2-7-14 DATE

6-22-15
PLANS APPROVAL DATE

REGISTERED PROFESSIONAL ENGINEER ISAIAS D. YALAN No. 68269 Exp. 9/30/15 CIVIL STATE OF CALIFORNIA

The State of California or its officers or agents shall not be responsible for the accuracy or completeness of scanned copies of this plan sheet.

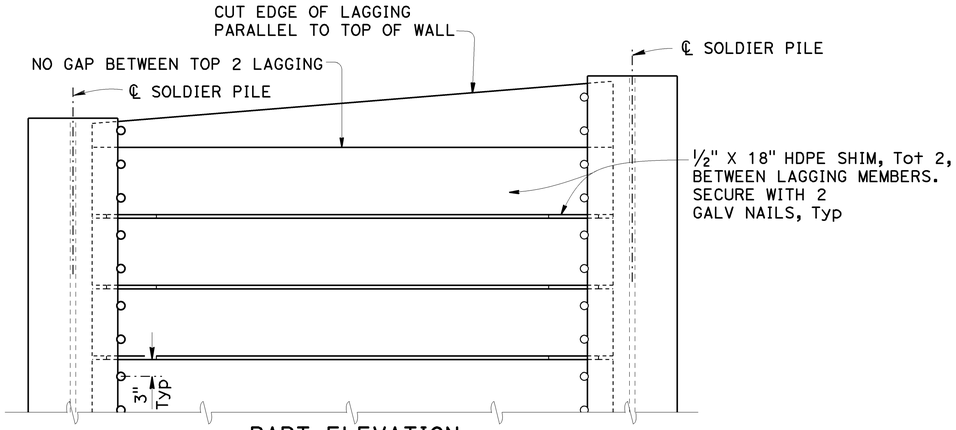

PART ELEVATION

LAGGING DETAILS (ALTERNATIVE 1)

NO SCALE

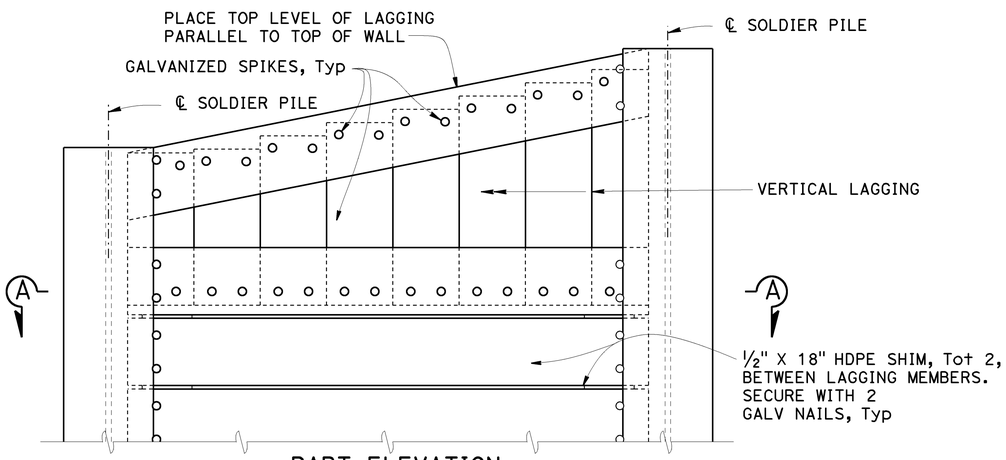

PART ELEVATION

LAGGING DETAILS (ALTERNATIVE 2)

NO SCALE

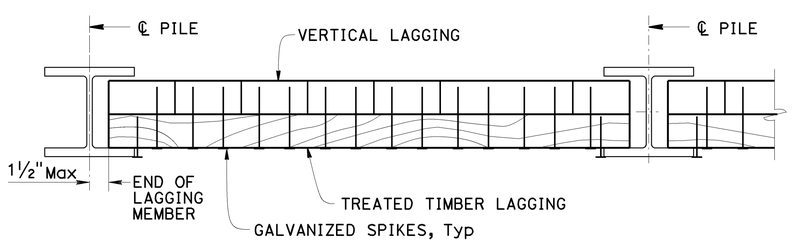

SECTION A-A

NO SCALE

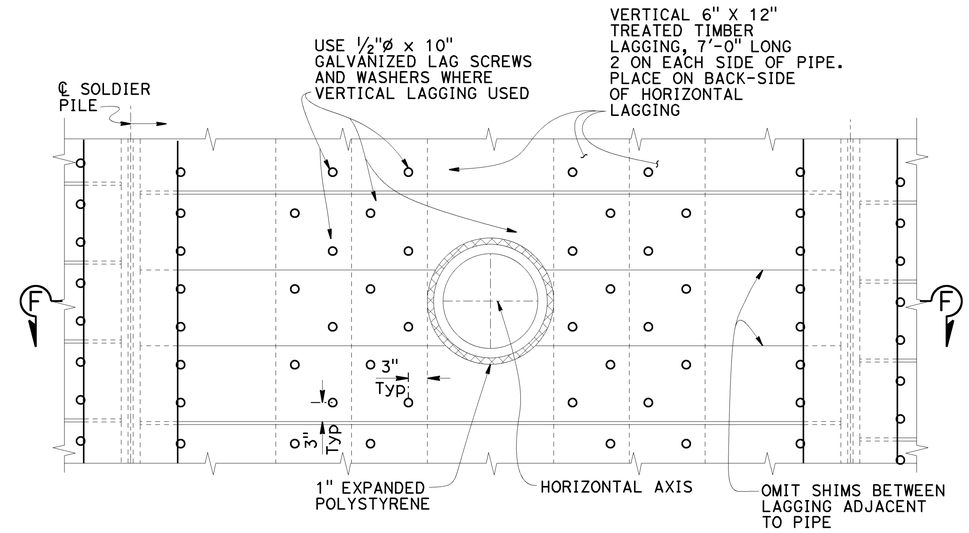

OPENING FOR 18"ø OD RCP PIPE

UTILITY THROUGH LAGGING DETAIL

1" = 1'-0"

NOTE:

For details not shown see "WALL DETAILS No. 1" sheet

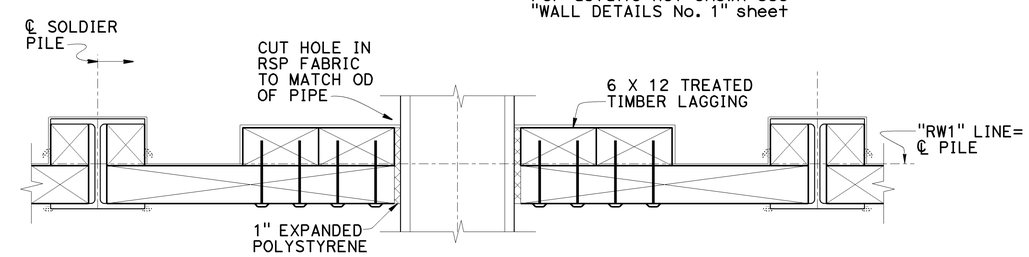

SECTION F-F

1" = 1'-0"

NOTES:

1. No clipping of timber lagging corners allowed
2. Use 40d Galv wire spikes for 6 x 12 lagging
3. Spikes shall not be bent
4. Structural concrete cap not shown
5. For lagging details (Alternative 1) and (Alternative 2) vertical lagging length varies with location

DESIGN	BY Isaias Yalan	CHECKED M. Van De Pol	
DETAILS	BY Tim Fairall	CHECKED M. Van De Pol	
QUANTITIES	BY Isaias Yalan	CHECKED Nasser Tachta	

STATE OF CALIFORNIA
DEPARTMENT OF TRANSPORTATION

DIVISION OF ENGINEERING SERVICES
STRUCTURE DESIGN
DESIGN BRANCH 9

BRIDGE No. 30E0225
POST MILE 33.40

BENEDICT DRIVE SOLDIER PILE WALL
WALL DETAILS No. 2

STRUCTURES DESIGN DETAIL SHEET (ENGLISH) (REV. 09-01-10)

ORIGINAL SCALE IN INCHES FOR REDUCED PLANS 0 1 2 3

UNIT: 3594
PROJECT NUMBER & PHASE: 04120000091
CONTRACT No.: 04-2G8604

DISREGARD PRINTS BEARING EARLIER REVISION DATES

REVISION DATES 5-21-13

SHEET 11 OF 14

FILE => 30e0225-1-det02.dgn

USERNAME => s114701 DATE PLOTTED => 01-APR-2014 TIME PLOTTED => 13:22

DIST	COUNTY	ROUTE	POST MILES TOTAL PROJECT	SHEET No	TOTAL SHEETS
04	Ala	580	R33.4	89	91

M. Momenzadeh. 4-9-13
REGISTERED GEOTECHNICAL ENGINEER

6-22-15
PLANS APPROVAL DATE

REGISTERED PROFESSIONAL ENGINEER
Mahmood Momenzadeh
No. 2685
Exp. 12-31-13
GEOTECHNICAL
STATE OF CALIFORNIA

The State of California or its officers or agents shall not be responsible for the accuracy or completeness of electronic copies of this plan sheet.

This LOTB sheet was prepared in accordance with the Caltrans Soil & Rock Logging, Classification, & Presentation Manual (2010 Edition).

See 2010 Standard Plans A10F and A10G for Soil Legend, and A10H for Rock Legend.

BENCH MARK

SUHV 1014 PK/CT TAG on ramp
30.5 ft left of "NR" Line, Sta 85+62.7
N: 1528220.289
E: 447409.506
Elev 96.904
NAVD: 88

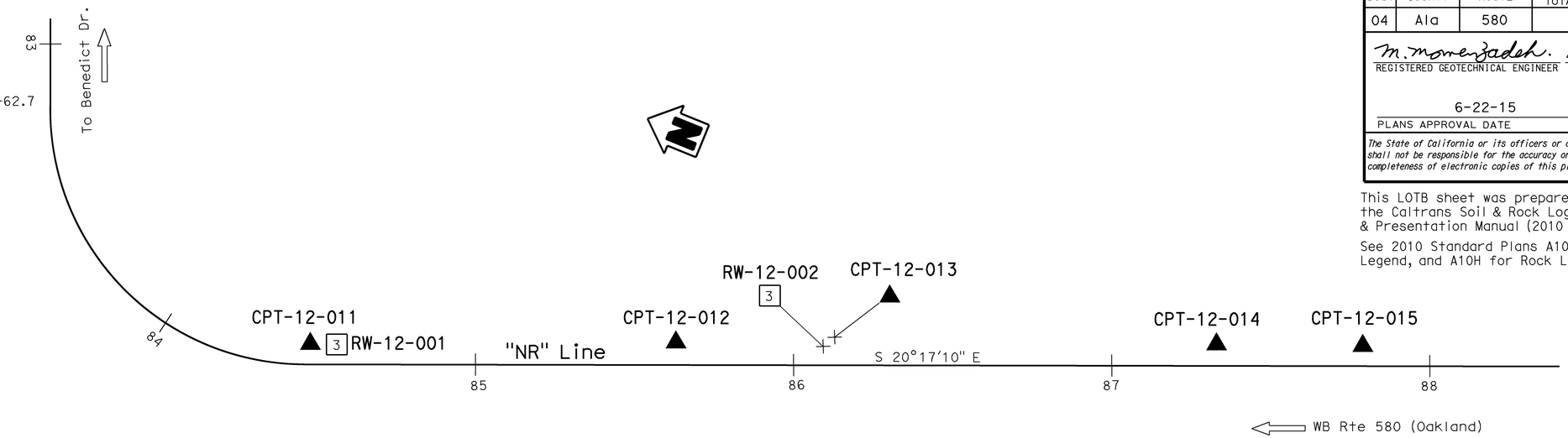

PLAN
1" = 20'

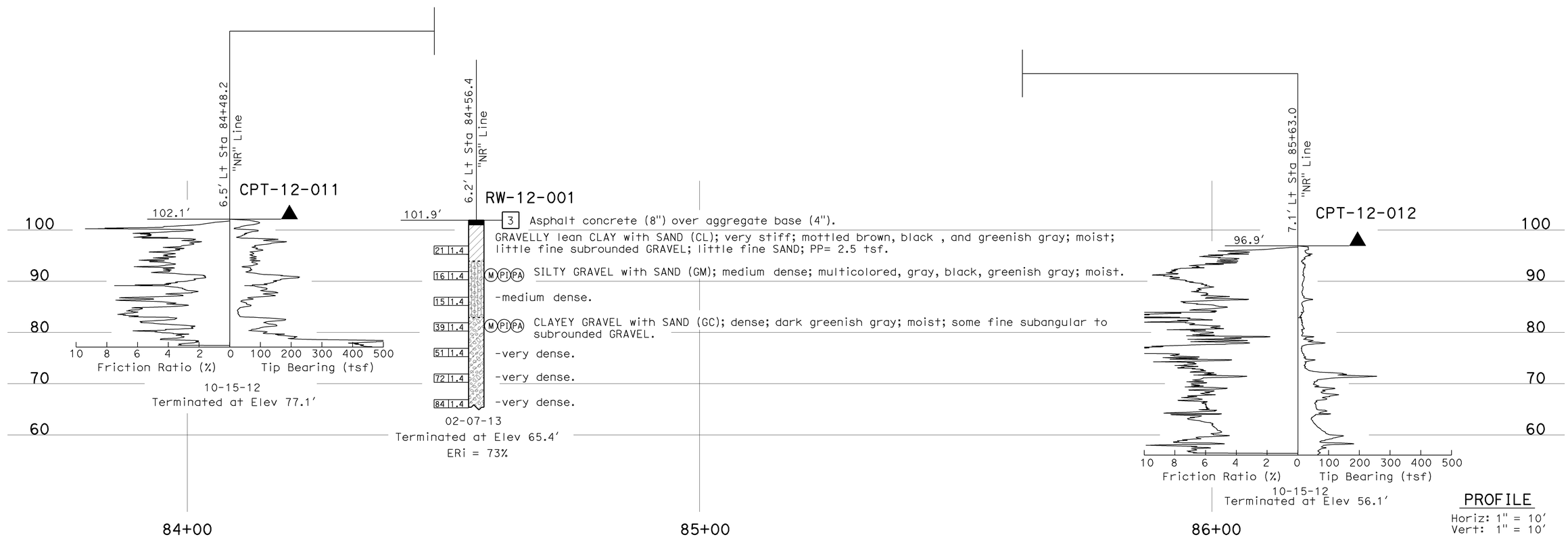

PROFILE
Horiz: 1" = 10'
Vert: 1" = 10'

ENGINEERING SERVICES	MATERIALS AND GEOTECHNICAL SERVICES	STATE OF CALIFORNIA DEPARTMENT OF TRANSPORTATION	DIVISION OF ENGINEERING SERVICES STRUCTURE DESIGN DESIGN BRANCH 9	BRIDGE NO. 33E0225 POST MILE 33.4	BENEDICT DRIVE SOLDIER PILE WALL LOG OF TEST BORINGS 1 OF 3
FUNCTIONAL SUPERVISOR NAME: T. Pokrywka	DRAWN BY: F. Nguyen CHECKED BY: J. Moore	FIELD INVESTIGATION BY: D. Nesbitt			

OGS CIVIL LOG OF TEST BORINGS SHEET

ORIGINAL SCALE IN INCHES FOR REDUCED PLANS 0 1 2 3

UNIT: 3643
PROJECT NUMBER & PHASE: 04120000091
CONTRACT NO.: 04-2G8604

DISREGARD PRINTS BEARING EARLIER REVISION DATES

REVISION DATES: 03-13-13 04-04-13

SHEET 12 OF 14

FILE => 30e0225-z-1tb01.dgn

USERNAME => s114701 DATE PLOTTED => 01-APR-2014 TIME PLOTTED => 13:22

DIST	COUNTY	ROUTE	POST MILES TOTAL PROJECT	SHEET No	TOTAL SHEETS
04	Ala	580	R33.4	90	91

M. Momenzadeh. 4-9-13
REGISTERED GEOTECHNICAL ENGINEER

6-22-15
PLANS APPROVAL DATE

REGISTERED PROFESSIONAL ENGINEER
Mahmood Momenzadeh
No. 2685
Exp. 12-31-13
GEOTECHNICAL
STATE OF CALIFORNIA

The State of California or its officers or agents shall not be responsible for the accuracy or completeness of electronic copies of this plan sheet.

This LOTB sheet was prepared in accordance with the Caltrans Soil & Rock Logging, Classification, & Presentation Manual (2010 Edition).

See 2010 Standard Plans A10F and A10G for Soil Legend, and A10H for Rock Legend.

FOR PLAN VIEW, SEE
"LOG OF TEST BORINGS 1 OF 3"

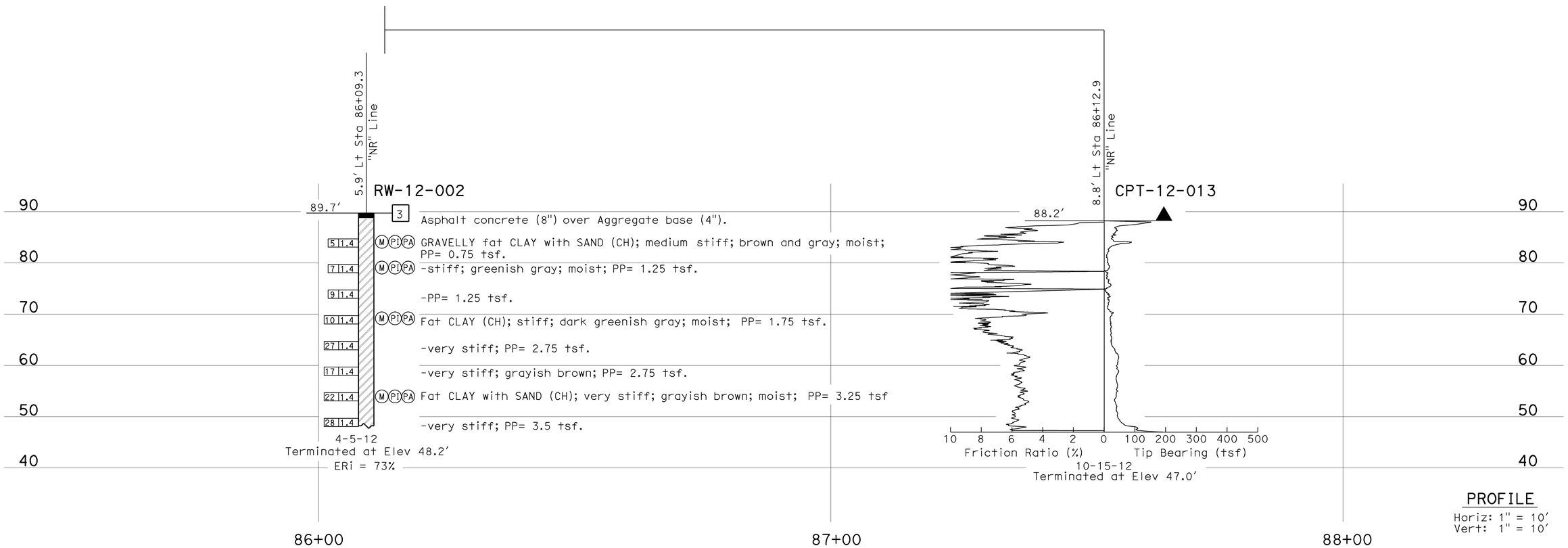

PROFILE
Horiz: 1" = 10'
Vert: 1" = 10'

ENGINEERING SERVICES	MATERIALS AND GEOTECHNICAL SERVICES	STATE OF CALIFORNIA DEPARTMENT OF TRANSPORTATION	DIVISION OF ENGINEERING SERVICES STRUCTURE DESIGN DESIGN BRANCH 9	BRIDGE NO. 33E0225 POST MILE 33.4	BENEDICT DRIVE SOLDIER PILE WALL LOG OF TEST BORINGS 2 OF 3
FUNCTIONAL SUPERVISOR NAME: T. Pokrywka	DRAWN BY: F. Nguyen CHECKED BY: J. Moore	FIELD INVESTIGATION BY: D. Nesbitt			

OGS CIVIL LOG OF TEST BORINGS SHEET

ORIGINAL SCALE IN INCHES FOR REDUCED PLANS 0 1 2 3

UNIT: 3643
PROJECT NUMBER & PHASE: 04120000091 CONTRACT NO.: 04-2G8604

DISREGARD PRINTS BEARING EARLIER REVISION DATES

REVISION DATES: 03-13-13 04-04-13 | SHEET 13 OF 14

FILE => 30e0225-z-1tb02.dgn

USERNAME => s114701 DATE PLOTTED => 01-APR-2014 TIME PLOTTED => 13:22

DIST	COUNTY	ROUTE	POST MILES TOTAL PROJECT	SHEET No.	TOTAL SHEETS
04	Ala	580	R33.4	91	91

M. Momenzadeh. 4-9-13
REGISTERED GEOTECHNICAL ENGINEER

6-22-15
PLANS APPROVAL DATE

REGISTERED PROFESSIONAL ENGINEER
Mahmood Momenzadeh
No. 2685
Exp. 12-31-13
GEOTECHNICAL
STATE OF CALIFORNIA

The State of California or its officers or agents shall not be responsible for the accuracy or completeness of electronic copies of this plan sheet.

This LOTB sheet was prepared in accordance with the Caltrans Soil & Rock Logging, Classification, & Presentation Manual (2010 Edition).

See 2010 Standard Plans A10F and A10G for Soil Legend, and A10H for Rock Legend.

FOR PLAN VIEW, SEE
"LOG OF TEST BORINGS 1 OF 3"

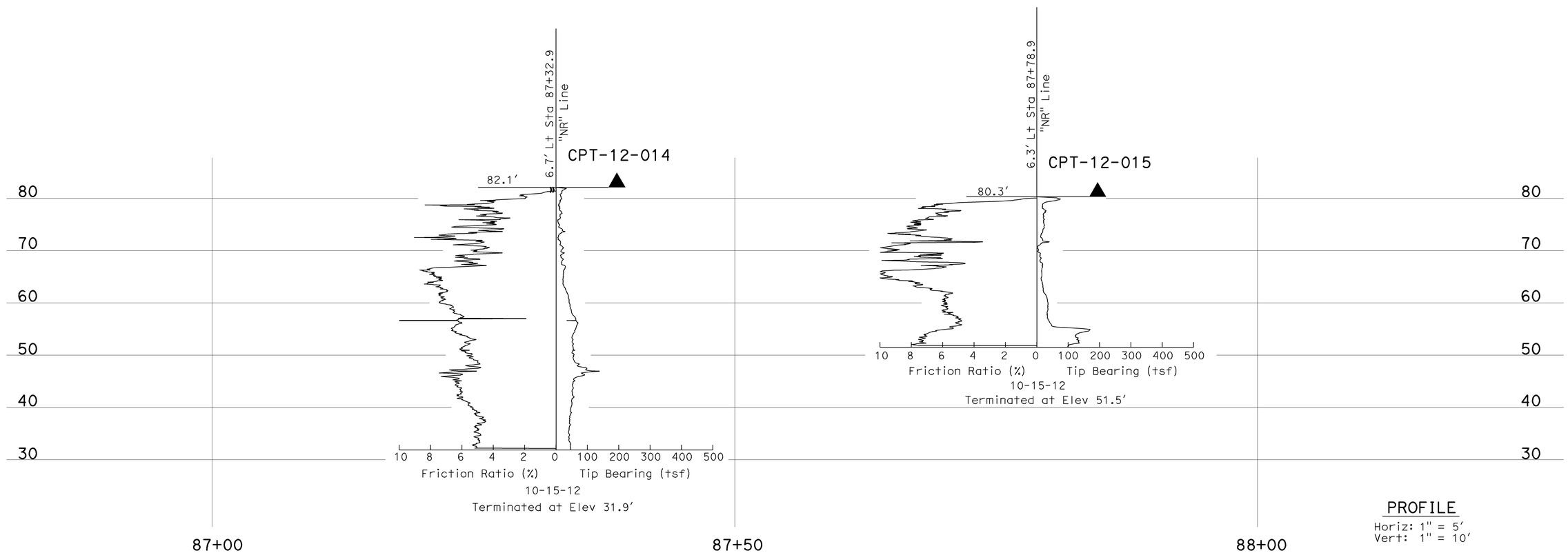

PROFILE
Horiz: 1" = 5'
Vert: 1" = 10'

ENGINEERING SERVICES	MATERIALS AND GEOTECHNICAL SERVICES	STATE OF CALIFORNIA DEPARTMENT OF TRANSPORTATION	DIVISION OF ENGINEERING SERVICES STRUCTURE DESIGN DESIGN BRANCH 9	BRIDGE NO. 33E0225 POST MILE 33.4	BENEDICT DRIVE SOLDIER PILE WALL
FUNCTIONAL SUPERVISOR NAME: T. Pokrywka	DRAWN BY: F. Nguyen CHECKED BY: J. Moore	FIELD INVESTIGATION BY: D. Nesbitt			LOG OF TEST BORINGS 3 OF 3

OGS CIVIL LOG OF TEST BORINGS SHEET

ORIGINAL SCALE IN INCHES FOR REDUCED PLANS 0 1 2 3

UNIT: 3643
PROJECT NUMBER & PHASE: 04120000091 CONTRACT NO.:

DISREGARD PRINTS BEARING EARLIER REVISION DATES → 03-13-13 04-04-13

SHEET 14 OF 14

FILE => 30e0225-z-1tb03.dgn

USERNAME => s114701 DATE PLOTTED => 01-APR-2014 TIME PLOTTED => 13:22