Dist	COUNTY	ROUTE	POST MILES TOTAL PROJECT	SHEET No.	TOTAL SHEETS
04	Ala	580	R4.0	1	58

ACNHI-5801(066)

STATE OF CALIFORNIA
DEPARTMENT OF TRANSPORTATION

PROJECT PLANS FOR CONSTRUCTION ON
STATE HIGHWAY
IN ALAMEDA COUNTY
NEAR LIVERMORE
2.0 MILES EAST OF NORTH FLYNN ROAD
AT STONE CUT UNDERPASS

TO BE SUPPLEMENTED BY STANDARD PLANS DATED 2010

INDEX OF PLANS

SHEET No.	DESCRIPTION
1	TITLE SHEET
2	TYPICAL CROSS SECTIONS
3	LAYOUT
4 - 9	CONSTRUCTION DETAILS
10	TEMPORARY WATER POLLUTION CONTROL PLAN
11 - 14	DRAINAGE PLAN, PROFILES, DETAILS AND QUANTITIES
15	CONSTRUCTION AREA SIGNS
16 - 17	STAGE CONSTRUCTION AND TRAFFIC HANDLING PLAN
18 - 20	PAVEMENT DELINEATION PLAN AND QUANTITIES
21 - 22	SUMMARY OF QUANTITIES
23 - 25	EROSION CONTROL LEGEND, PLAN AND DETAILS
26 - 45	REVISED STANDARD PLANS
	STRUCTURE PLANS
46 - 56	GROUND ANCHOR SOLDIER PILE WALL
57 - 58	LOG OF TEST BORINGS

THE STANDARD PLANS LIST APPLICABLE TO THIS CONTRACT IS INCLUDED IN THE NOTICE TO BIDDERS AND SPECIAL PROVISIONS BOOK.

LOCATION MAP

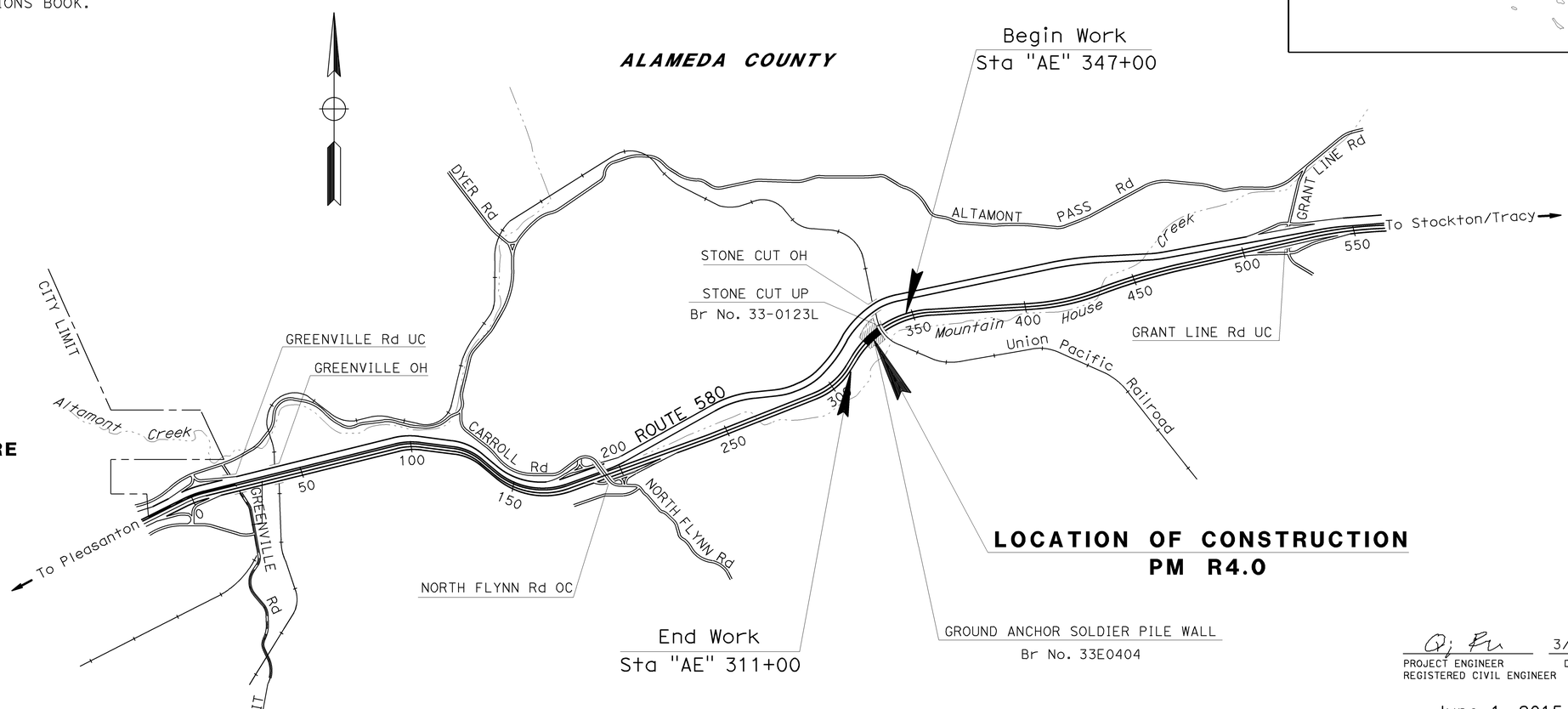

NO SCALE

THE CONTRACTOR SHALL POSSESS THE CLASS (OR CLASSES) OF LICENSE AS SPECIFIED IN THE "NOTICE TO BIDDERS."

PROJECT MANAGER: JAY HAGHPARAST
DESIGN MANAGER: KENDALL KITAMURA

Qi Fu 3/10/15
PROJECT ENGINEER REGISTERED CIVIL ENGINEER DATE

June 1, 2015
PLANS APPROVAL DATE

REGISTERED PROFESSIONAL ENGINEER — Qi Fu No. 73343 Exp. 12-31-16 CIVIL — STATE OF CALIFORNIA

THE STATE OF CALIFORNIA OR ITS OFFICERS OR AGENTS SHALL NOT BE RESPONSIBLE FOR THE ACCURACY OR COMPLETENESS OF SCANNED COPIES OF THIS PLAN SHEET.

CONTRACT No.	04-2G8504
PROJECT ID	0412000008

LAST REVISION 05-18-15
DATE PLOTTED => 09-JUL-2015
TIME PLOTTED => 09:48

Dist	COUNTY	ROUTE	POST MILES TOTAL PROJECT	SHEET No.	TOTAL SHEETS
04	Ala	580	R4.0	2	58

REGISTERED CIVIL ENGINEER — DATE 3/10/15

6-1-15
PLANS APPROVAL DATE

REGISTERED PROFESSIONAL ENGINEER — Qi Fu No. 73343 Exp. 12-31-16 CIVIL — STATE OF CALIFORNIA

THE STATE OF CALIFORNIA OR ITS OFFICERS OR AGENTS SHALL NOT BE RESPONSIBLE FOR THE ACCURACY OR COMPLETENESS OF SCANNED COPIES OF THIS PLAN SHEET.

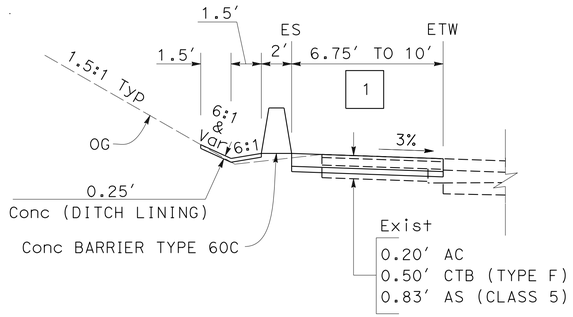

"AE" 341+00 TO 343+25

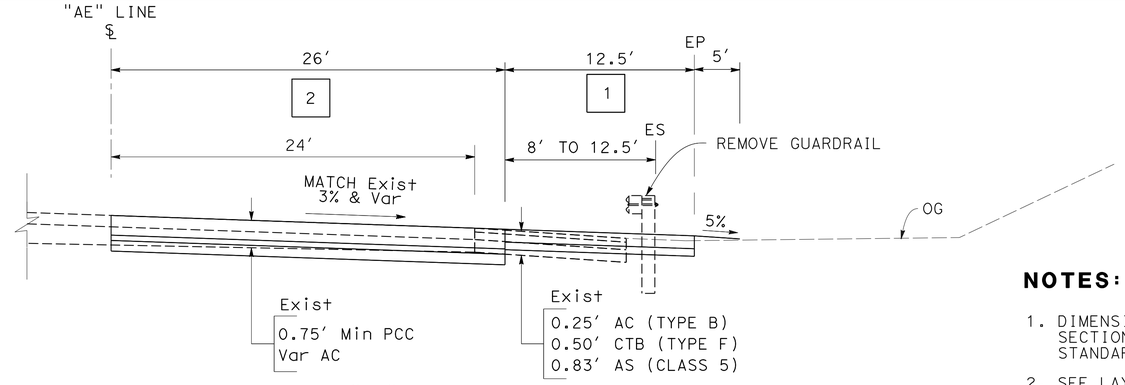

"AE" 343+00 TO 343+25

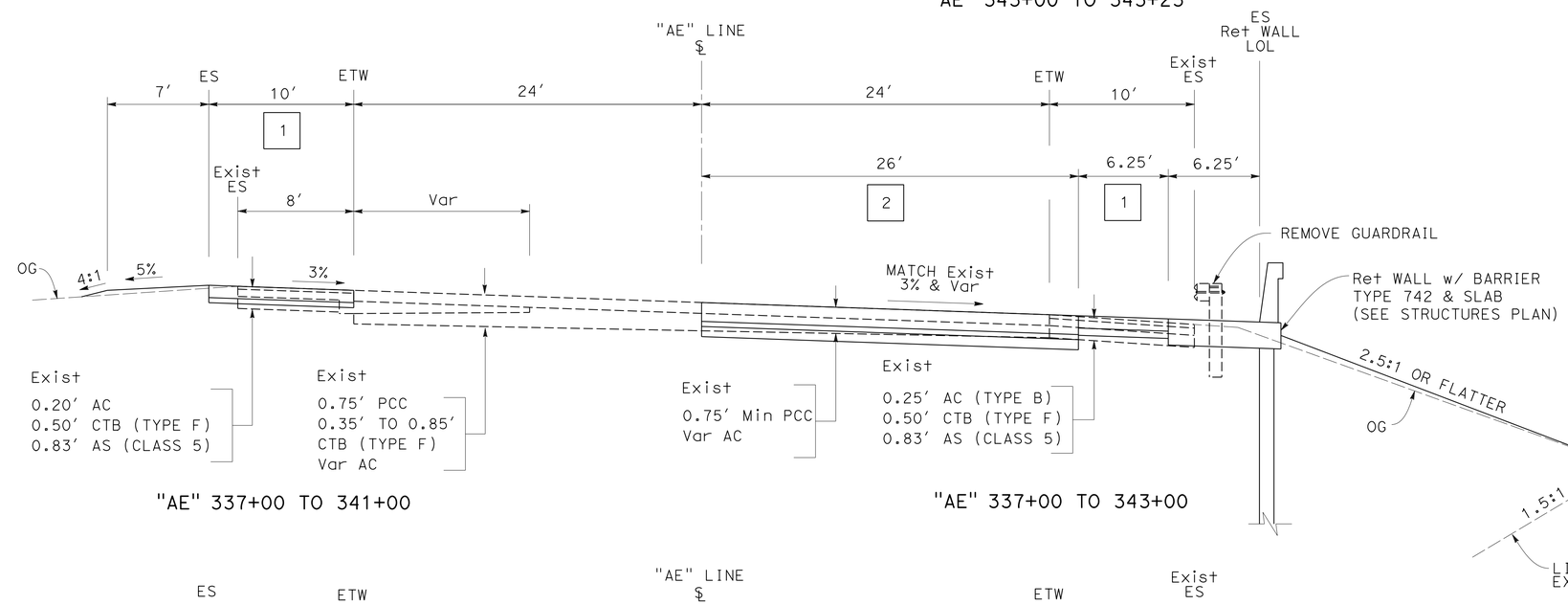

"AE" 337+00 TO 341+00

"AE" 337+00 TO 343+00

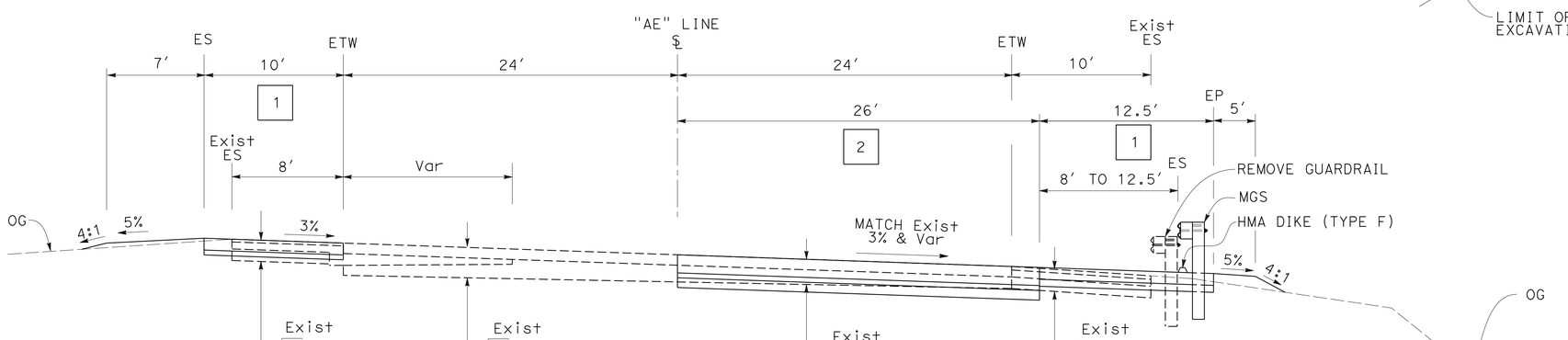

"AE" 336+25 TO 337+00

NOTES:

1. DIMENSIONS OF THE PAVEMENT STRUCTURES (STRUCTURAL SECTIONS) ARE SUBJECT TO TOLERANCES SPECIFIED IN THE STANDARD SPECIFICATIONS.
2. SEE LAYOUT FOR CONCRETE LINED DITCH, CONCRETE BARRIER, HMA DIKE, AND MGS LOCATIONS.

PAVEMENT STRUCTURAL SECTIONS:

1	0.85' HMA (TYPE A) 0.50' AS (CLASS 2)
2	1.30' JPCP (RSC) 0.50' LCBRS 0.70 AS (CLASS 2)

ABBREVIATIONS:

&	AND
LCBRS	LEAN CONCRETE BASE RAPID SETTING
RSC	RAPID STRENGTH CONCRETE
w/	WITH

TYPICAL CROSS SECTIONS

NO SCALE

EB ROUTE 580

X-1

STATE OF CALIFORNIA - DEPARTMENT OF TRANSPORTATION
Caltrans® DESIGN

FUNCTIONAL SUPERVISOR: KENDALL KITAMURA
CALCULATED-DESIGNED BY: QI FU — REVISED BY: QF
CHECKED BY: KIRT MORET — DATE REVISED: 11/18/14

LAST REVISION 03-16-15 — DATE PLOTTED => 09-JUN-2015 — TIME PLOTTED => 15:49

Dist	COUNTY	ROUTE	POST MILES TOTAL PROJECT	SHEET No.	TOTAL SHEETS
04	Ala	580	R4.0	3	58

REGISTERED CIVIL ENGINEER 3/10/15 DATE

6-1-15
PLANS APPROVAL DATE

REGISTERED PROFESSIONAL ENGINEER Qi Fu No. 73343 Exp. 12-31-16 CIVIL STATE OF CALIFORNIA

THE STATE OF CALIFORNIA OR ITS OFFICERS OR AGENTS SHALL NOT BE RESPONSIBLE FOR THE ACCURACY OR COMPLETENESS OF SCANNED COPIES OF THIS PLAN SHEET.

NOTE:

FOR ACCURATE RIGHT OF WAY DATA, CONTACT RIGHT OF WAY ENGINEERING AT THE DISTRICT OFFICE.

LEGEND:

- VEGETATION CONTROL
- REMOVE Exist RSP
- Exist RSP
- DESTROY WELL

NOTE:

1. SEE LOG OF TEST BORING ON STRUCTURE PLAN FOR ADDITIONAL EXISTING WELL INFORMATION.
2. SEE SHEET C-3 FOR ENVIRONMENTALLY SENSITIVE AREA AND TEMPORARY REINFORCED SILT FENCE.

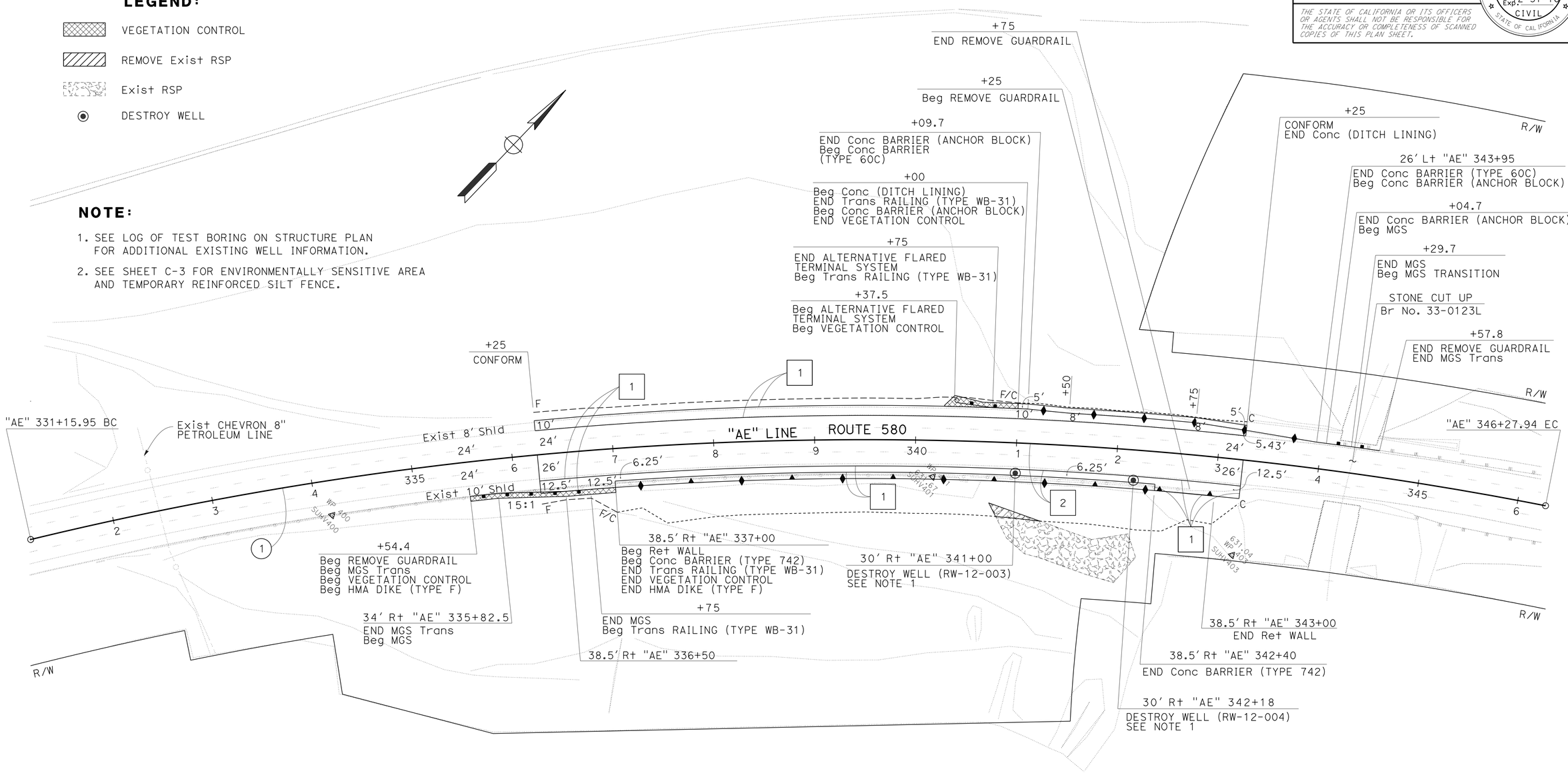

CURVE DATA

No. ⊕	R	Δ	T	L	N-COORDINATE	E-COORDINATE
1	3500'	24° 45' 06"	767.98'	1511.99'	2088306.52	6236918.31

LAYOUT
SCALE: 1" = 50'

L-1

STATE OF CALIFORNIA - DEPARTMENT OF TRANSPORTATION
Caltrans® DESIGN

FUNCTIONAL SUPERVISOR: KENDALL KITAMURA
CALCULATED-DESIGNED BY: Qi Fu
CHECKED BY: KIRT MORET
REVISED BY: QF
DATE REVISED: 11/18/14

LAST REVISION 03-06-15
DATE PLOTTED => 09-JUN-2015
TIME PLOTTED => 15:49

Dist	COUNTY	ROUTE	POST MILES TOTAL PROJECT	SHEET No.	TOTAL SHEETS
04	Ala	580	R4.0	4	58

REGISTERED CIVIL ENGINEER 3/10/15 DATE

6-1-15
PLANS APPROVAL DATE

REGISTERED PROFESSIONAL ENGINEER Qi Fu No. 73343 Exp. 12-31-16 CIVIL STATE OF CALIFORNIA

THE STATE OF CALIFORNIA OR ITS OFFICERS OR AGENTS SHALL NOT BE RESPONSIBLE FOR THE ACCURACY OR COMPLETENESS OF SCANNED COPIES OF THIS PLAN SHEET.

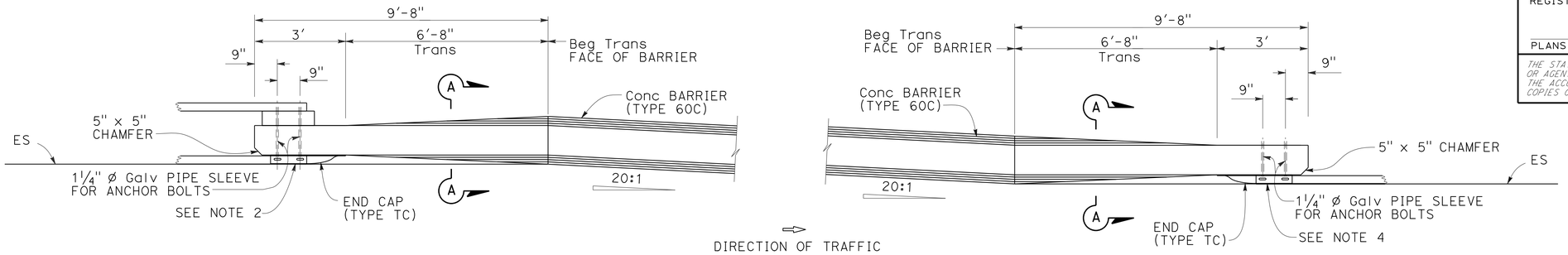

PLAN

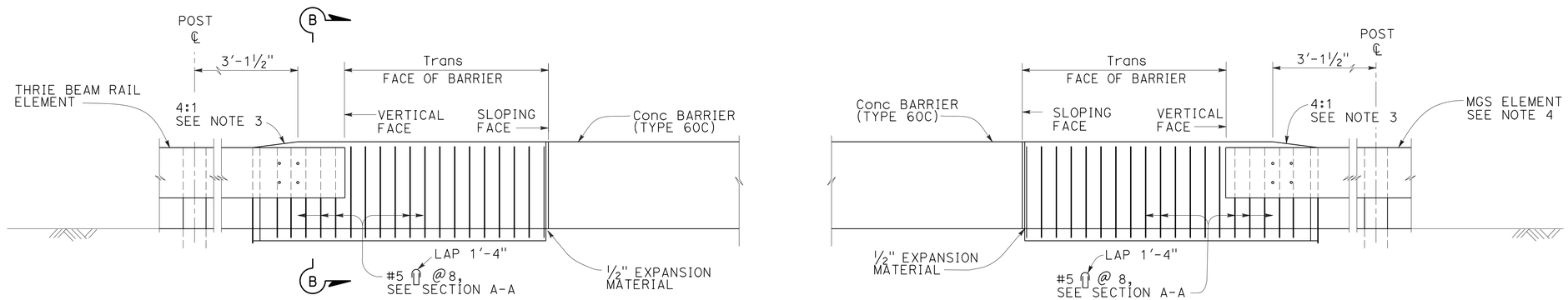

ELEVATION

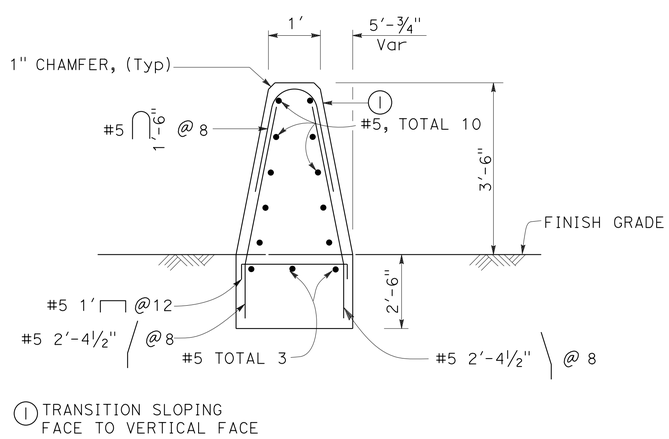

SECTION A-A

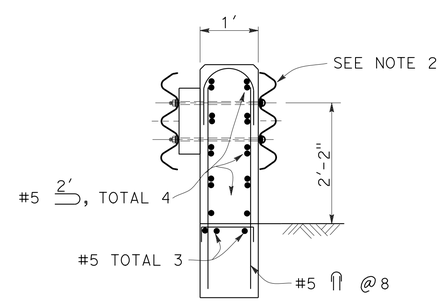

SECTION B-B

NOTES:

1. CLEARANCE TO REINFORCING STEEL IN BARRIER TO BE 1", EXCEPT AS NOTED. LONGITUDINAL REINFORCEMENT TO STOP AT ALL EXPANSION JOINTS.
2. FOR TYPICAL METAL RAILING CONNECTION DETAILS NOT SHOWN, SEE REVISED STANDARD PLAN A77U4.
3. TAPER TOP OF THE ANCHOR BLOCK AT 4:1 TO MATCH THE TOP ELEVATION OF THE THRIE BEAM RAIL ELEMENT.
4. CONCRETE BARRIER (ANCHOR BLOCK) CONNECTION TO MGS NOT SHOWN, SEE CONNECTION DETAIL BB IN REVISED STANDARD PLAN A77U1.

CONSTRUCTION DETAILS
CONCRETE BARRIER (ANCHOR BLOCK)

NO SCALE

C-1

STATE OF CALIFORNIA - DEPARTMENT OF TRANSPORTATION
Caltrans®
DESIGN
FUNCTIONAL SUPERVISOR: KENDALL KITAMURA
CALCULATED-DESIGNED BY: QI FU
CHECKED BY: KIRT MORET
REVISED BY: QF
DATE REVISED: 11/18/14

LAST REVISION 03-06-15
DATE PLOTTED => 09-JUN-2015
TIME PLOTTED => 15:49

Dist	COUNTY	ROUTE	POST MILES TOTAL PROJECT	SHEET No.	TOTAL SHEETS
04	Ala	580	R4.0	5	58

REGISTERED CIVIL ENGINEER 3/10/15 DATE

6-1-15
PLANS APPROVAL DATE

REGISTERED PROFESSIONAL ENGINEER Qi Fu No. 73343 Exp. 12-31-16 CIVIL STATE OF CALIFORNIA

THE STATE OF CALIFORNIA OR ITS OFFICERS OR AGENTS SHALL NOT BE RESPONSIBLE FOR THE ACCURACY OR COMPLETENESS OF SCANNED COPIES OF THIS PLAN SHEET.

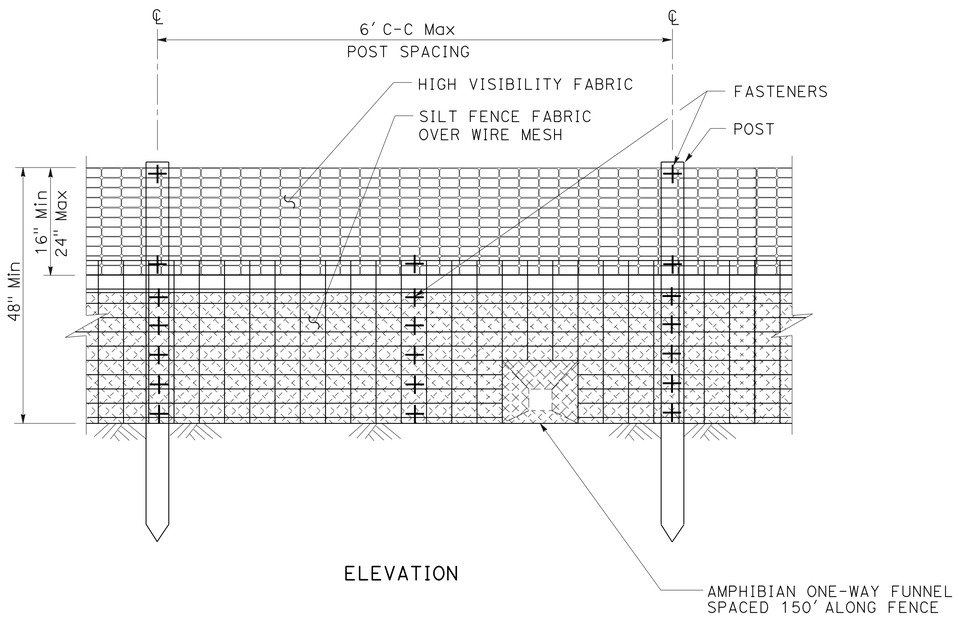

ELEVATION

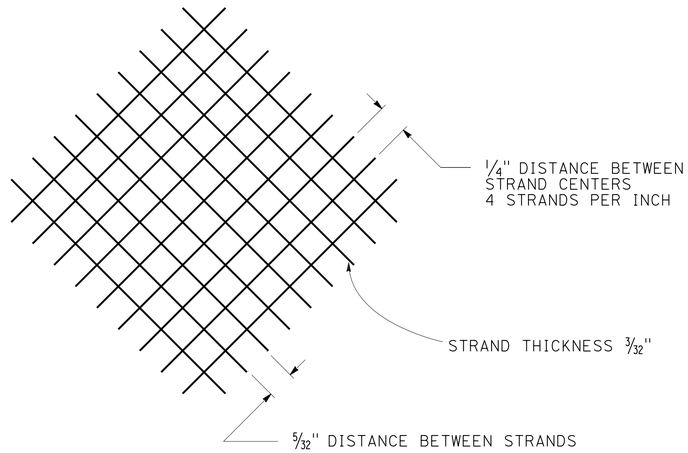

TYPICAL POLYMER MATRIX FABRIC DETAIL
(NOMINAL DIMENSIONS)

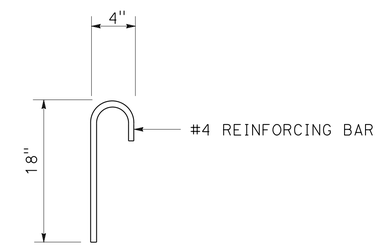

ANCHOR

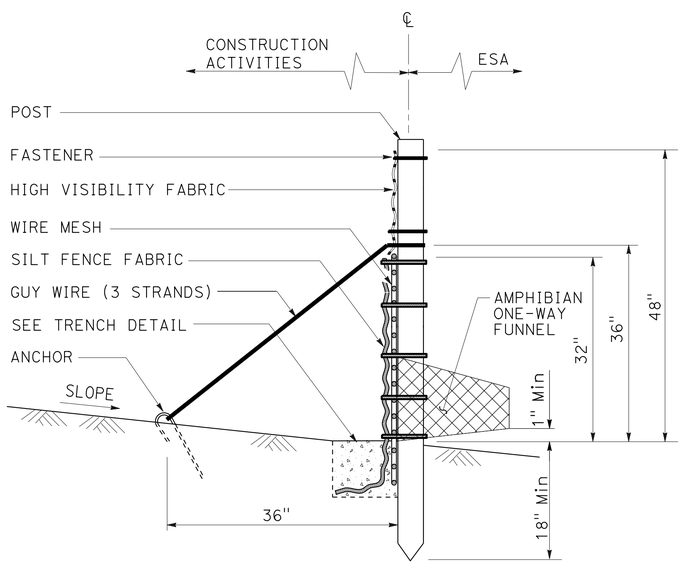

SECTION

TEMPORARY REINFORCED SILT FENCE

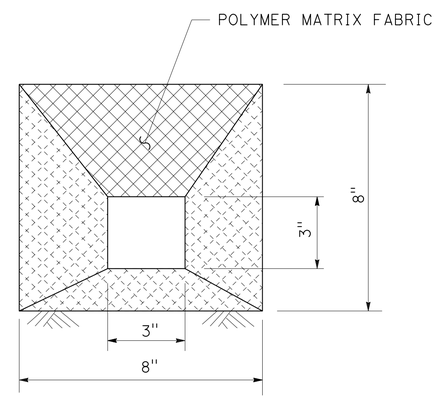

AMPHIBIAN ONE-WAY FUNNEL DETAIL

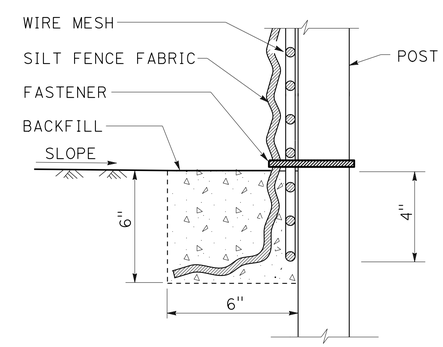

SECTION

TRENCH DETAIL

CONSTRUCTION DETAILS
(TEMPORARY REINFORCED SILT FENCE)

NO SCALE

C-2

QF	11/18/14
REVISED BY	DATE REVISED
QI FU	KIRT MORET
CALCULATED-DESIGNED BY	CHECKED BY
FUNCTIONAL SUPERVISOR	KENDALL KITAMURA

STATE OF CALIFORNIA - DEPARTMENT OF TRANSPORTATION
Caltrans
DESIGN

LAST REVISION 11-13-14 | DATE PLOTTED => 09-JUN-2015 | TIME PLOTTED => 15:49

Dist	COUNTY	ROUTE	POST MILES TOTAL PROJECT	SHEET No.	TOTAL SHEETS
04	Ala	580	R4.0	6	58

REGISTERED CIVIL ENGINEER DATE 3/10/15

6-1-15
PLANS APPROVAL DATE

REGISTERED PROFESSIONAL ENGINEER Qi Fu No. 73343 Exp. 12-31-16 CIVIL STATE OF CALIFORNIA

THE STATE OF CALIFORNIA OR ITS OFFICERS OR AGENTS SHALL NOT BE RESPONSIBLE FOR THE ACCURACY OR COMPLETENESS OF SCANNED COPIES OF THIS PLAN SHEET.

NOTE:

FOR ACCURATE RIGHT OF WAY DATA, CONTACT RIGHT OF WAY ENGINEERING AT THE DISTRICT OFFICE.

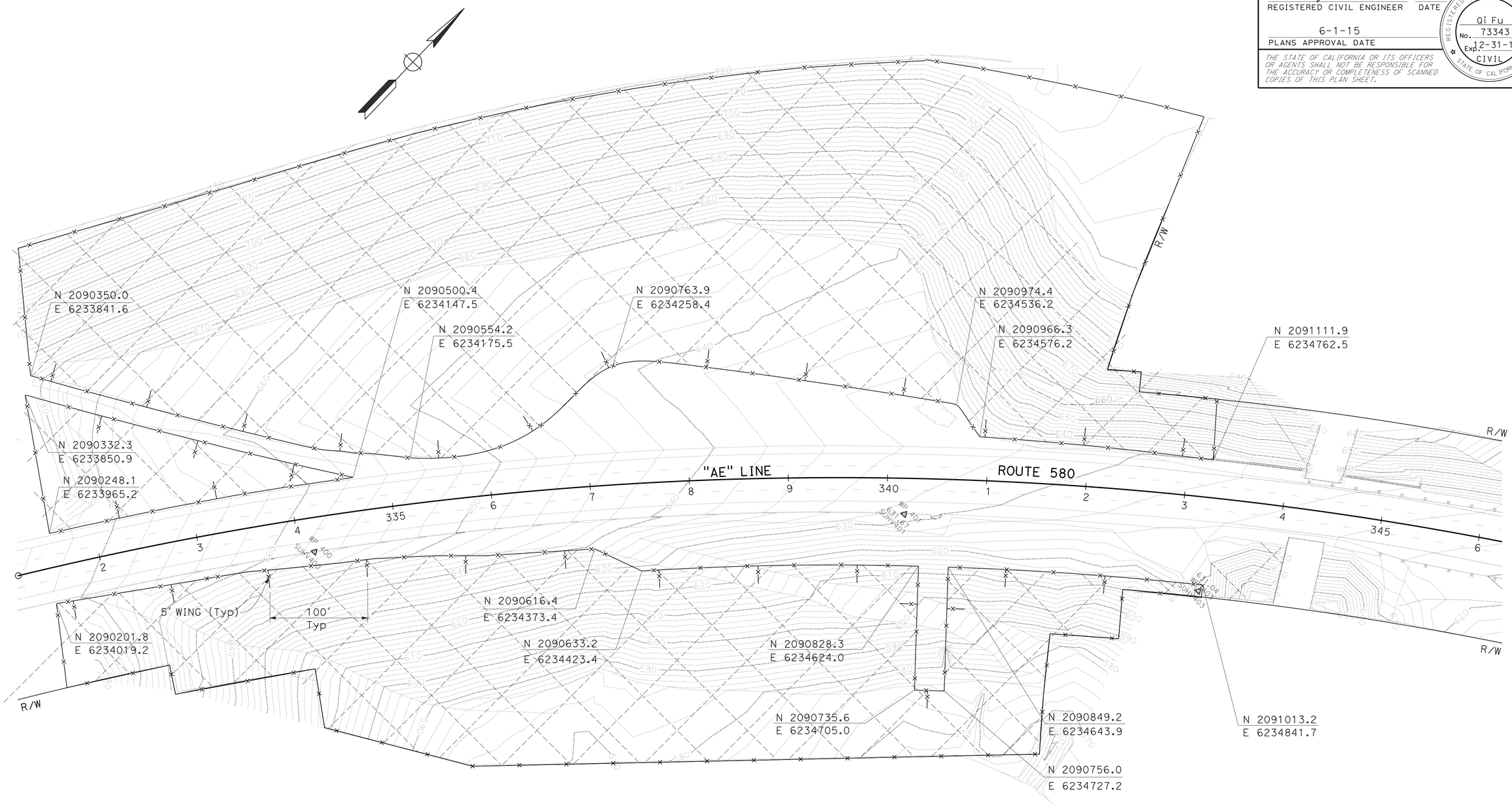

LEGEND:

TEMPORARY REINFORCED SILT FENCE

ENVIRONMENTALLY SENSITIVE AREA

CONSTRUCTION DETAILS
ENVIRONMENTALLY SENSITIVE AREA

SCALE: 1" = 50'

C-3

STATE OF CALIFORNIA - DEPARTMENT OF TRANSPORTATION
Caltrans
DESIGN

FUNCTIONAL SUPERVISOR: KENDALL KITAMURA
CALCULATED-DESIGNED BY: Qi Fu
CHECKED BY: KIRT MORET
REVISED BY: QF
DATE REVISED: 11/18/14

LAST REVISION 05-18-15
DATE PLOTTED => 09-JUN-2015
TIME PLOTTED => 15:49

Dist	COUNTY	ROUTE	POST MILES TOTAL PROJECT	SHEET No.	TOTAL SHEETS
04	Ala	580	R4.0	7	58

REGISTERED CIVIL ENGINEER DATE 3/10/15

6-1-15
PLANS APPROVAL DATE

REGISTERED PROFESSIONAL ENGINEER Qi Fu No. 73343 Exp. 12-31-16 CIVIL STATE OF CALIFORNIA

THE STATE OF CALIFORNIA OR ITS OFFICERS OR AGENTS SHALL NOT BE RESPONSIBLE FOR THE ACCURACY OR COMPLETENESS OF SCANNED COPIES OF THIS PLAN SHEET.

NOTE:

FOR ACCURATE RIGHT OF WAY DATA, CONTACT RIGHT OF WAY ENGINEERING AT THE DISTRICT OFFICE.

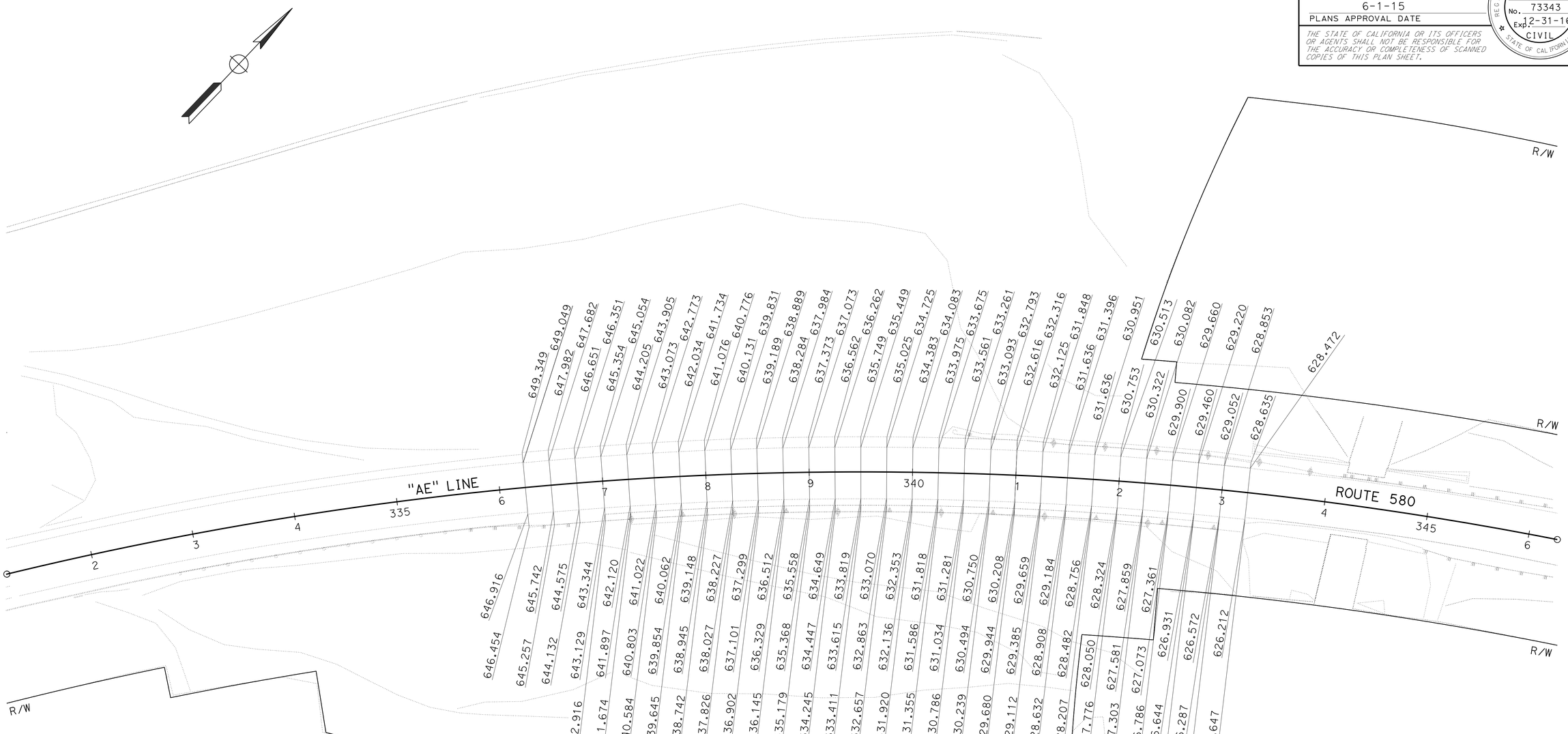

CONSTRUCTION DETAILS
PAVEMENT ELEVATION PLAN

SCALE: 1" = 50'

APPROVED FOR PAVEMENT ELEVATION WORK ONLY

C-4

STATE OF CALIFORNIA - DEPARTMENT OF TRANSPORTATION
Caltrans
DESIGN

FUNCTIONAL SUPERVISOR: KENDALL KITAMURA
CALCULATED-DESIGNED BY: QI FU
CHECKED BY: KIRT MORET
REVISED BY: QF
DATE REVISED: 11/18/14

LAST REVISION 11-17-14
DATE PLOTTED => 09-JUN-2015
TIME PLOTTED => 15:49

Dist	COUNTY	ROUTE	POST MILES TOTAL PROJECT	SHEET No.	TOTAL SHEETS
04	Ala	580	R4.0	8	58

Christopher R. Wilson 3/10/15
REGISTERED CIVIL ENGINEER DATE

6-1-15
PLANS APPROVAL DATE

REGISTERED PROFESSIONAL ENGINEER
Christopher Wilson
No. 49882
Exp. 9-30-16
CIVIL
STATE OF CALIFORNIA

THE STATE OF CALIFORNIA OR ITS OFFICERS OR AGENTS SHALL NOT BE RESPONSIBLE FOR THE ACCURACY OR COMPLETENESS OF SCANNED COPIES OF THIS PLAN SHEET.

NOTE:

FOR ACCURATE RIGHT OF WAY DATA, CONTACT RIGHT OF WAY ENGINEERING AT THE DISTRICT OFFICE.

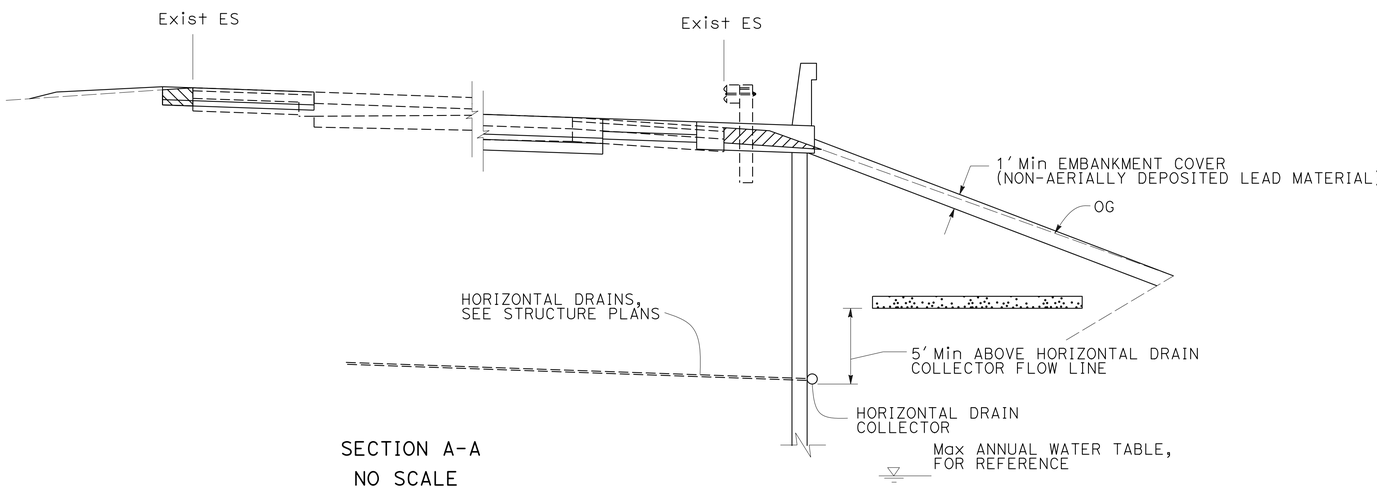

SECTION A-A
NO SCALE

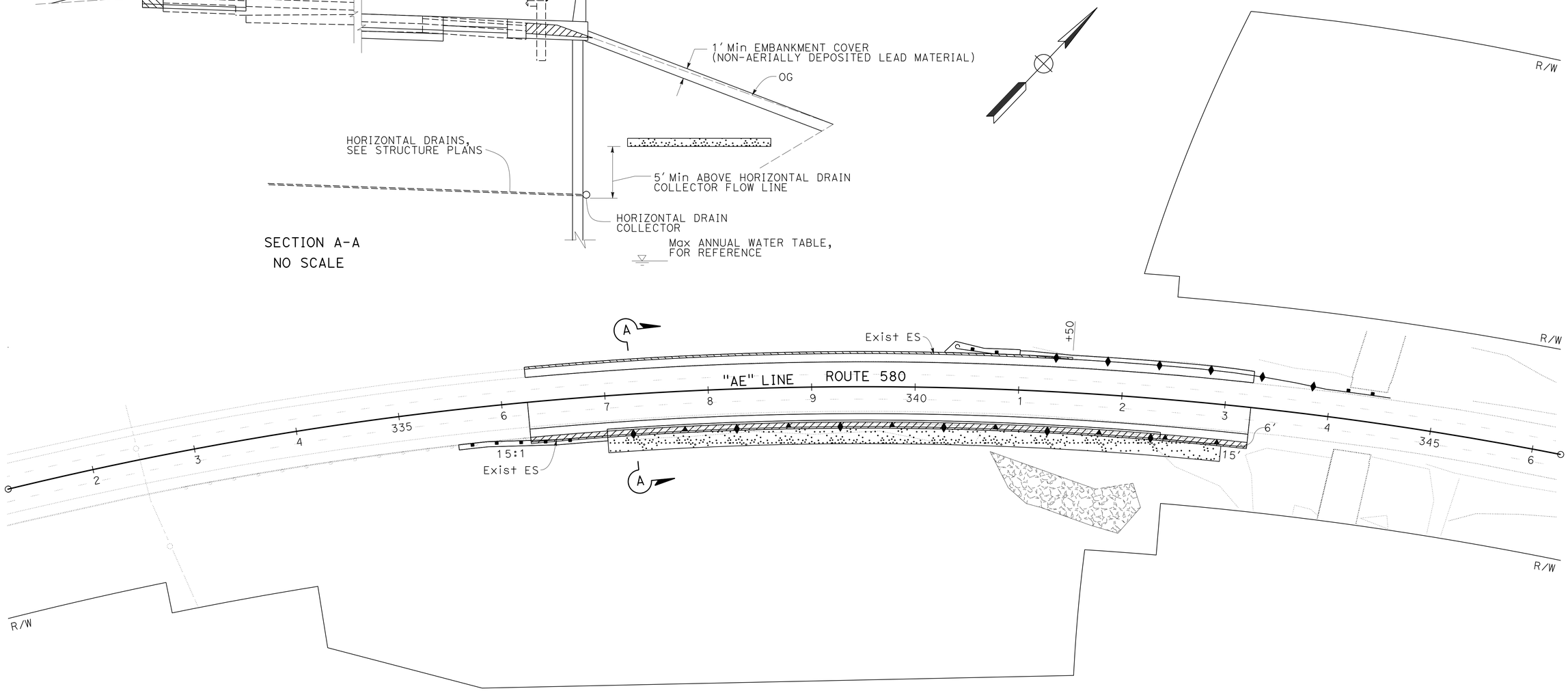

LEGEND:

- BURIAL LOCATION FOR ROADWAY EXCAVATION (TYPE Y-1) (AERIALLY DEPOSITED LEAD)
- OG-1', ROADWAY EXCAVATION (TYPE Y-1) (AERIALLY DEPOSITED LEAD)
- OG-1.5', ROADWAY EXCAVATION (TYPE Z-2) (AERIALLY DEPOSITED LEAD)

CONSTRUCTION DETAILS
AERIALLY DEPOSITED LEAD

SCALE: 1" = 50'

C-5

STATE OF CALIFORNIA - DEPARTMENT OF TRANSPORTATION
Caltrans
HAZARDOUS WASTE

FUNCTIONAL SUPERVISOR: ALLEN BARADAR
CALCULATED-DESIGNED BY: KEITH FANG
CHECKED BY: QI FU
REVISED BY: KF
DATE REVISED: 11/18/14

LAST REVISION 05-19-15
DATE PLOTTED => 09-JUN-2015
TIME PLOTTED => 15:49

Dist	COUNTY	ROUTE	POST MILES TOTAL PROJECT	SHEET No.	TOTAL SHEETS
04	Ala	580	R4.0	9	58

Qi Fu 3/10/15
REGISTERED CIVIL ENGINEER DATE

6-1-15
PLANS APPROVAL DATE

REGISTERED PROFESSIONAL ENGINEER
Qi Fu
No. 73343
Exp. 12-31-16
CIVIL
STATE OF CALIFORNIA

THE STATE OF CALIFORNIA OR ITS OFFICERS OR AGENTS SHALL NOT BE RESPONSIBLE FOR THE ACCURACY OR COMPLETENESS OF SCANNED COPIES OF THIS PLAN SHEET.

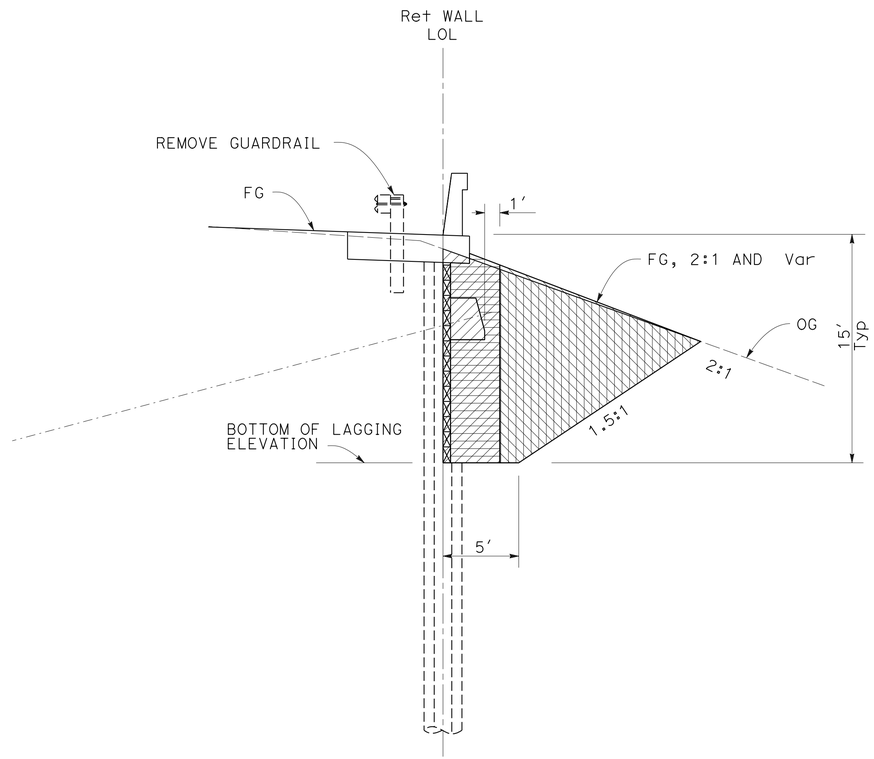

LEGEND: (FOR THIS SHEET ONLY)

- ROADWAY EXCAVATION
- ROADWAY EMBANKMENT
- STRUCTURE EXCAVATION (SOLDIER PILE WALL), SEE STRUCTURE PLAN
- STRUCTURE BACKFILL (SOLDIER PILE WALL), SEE STRUCTURE PLAN

CONSTRUCTION DETAILS
RETAINING WALL EARTHWORK LIMITS

NO SCALE

C-6

STATE OF CALIFORNIA - DEPARTMENT OF TRANSPORTATION
Caltrans
DESIGN

FUNCTIONAL SUPERVISOR: KENDALL KITAMURA
CALCULATED-DESIGNED BY: QI FU
CHECKED BY: KIRT MORET
REVISED BY: QF
DATE REVISED: 11/18/14

LAST REVISION 03-05-15
DATE PLOTTED => 09-JUN-2015
TIME PLOTTED => 15:49

Dist	COUNTY	ROUTE	POST MILES TOTAL PROJECT	SHEET No.	TOTAL SHEETS
04	Ala	580	R4.0	10	58

REGISTERED CIVIL ENGINEER 3/10/15 DATE

6-1-15
PLANS APPROVAL DATE

REGISTERED PROFESSIONAL ENGINEER Sharon X. Yuan No. 58701 Exp 2-31-16 CIVIL STATE OF CALIFORNIA

THE STATE OF CALIFORNIA OR ITS OFFICERS OR AGENTS SHALL NOT BE RESPONSIBLE FOR THE ACCURACY OR COMPLETENESS OF SCANNED COPIES OF THIS PLAN SHEET.

NOTE:

FOR ACCURATE RIGHT OF WAY DATA, CONTACT RIGHT OF WAY ENGINEERING AT THE DISTRICT OFFICE.

LEGEND:

TEMPORARY EROSION CONTROL (BFM)

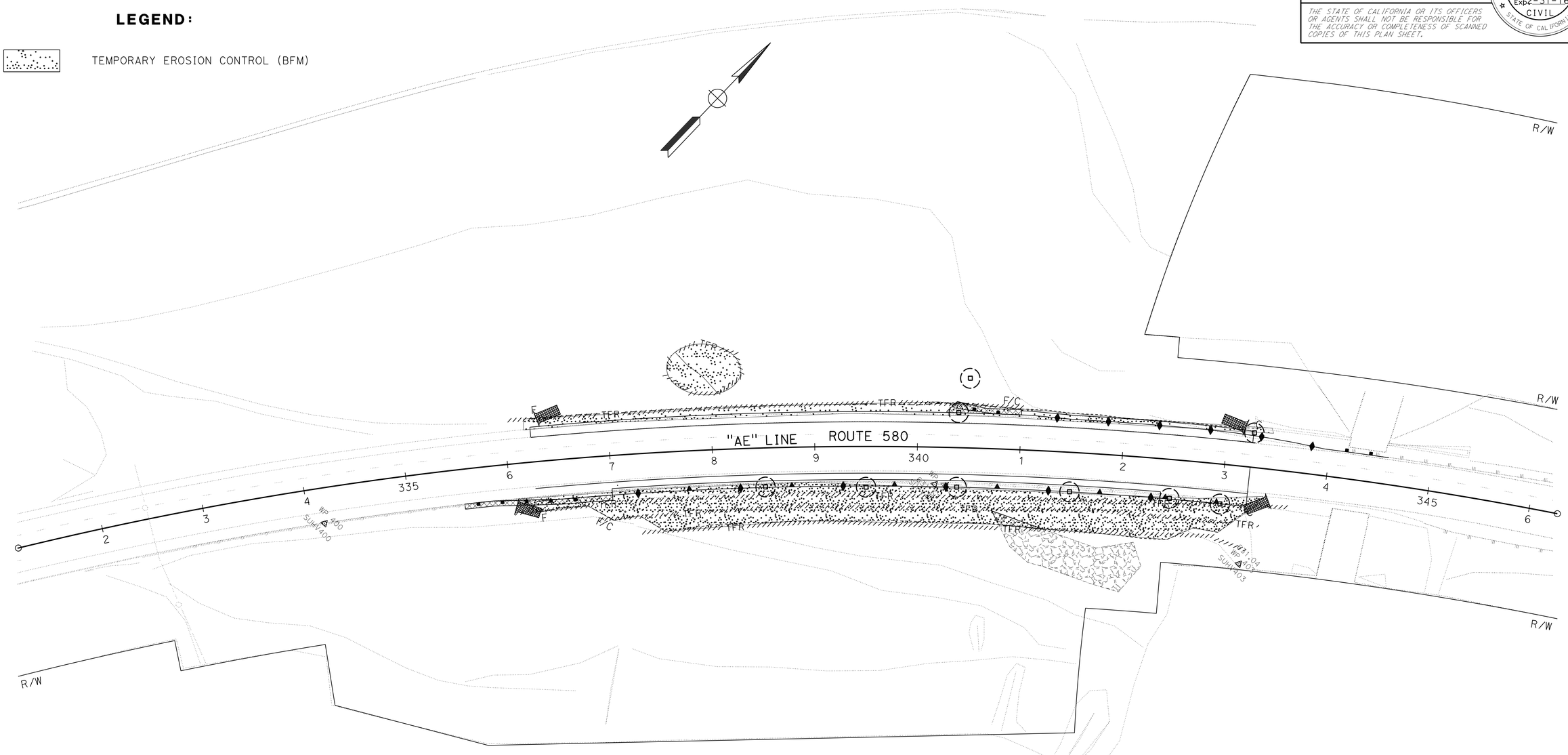

TEMPORARY WATER POLLUTION CONTROL AND ESA FENCE QUANTITIES

LOCATION	TEMPORARY HYDRAULIC MULCH (BONDED FIBER MATRIX)	TEMPORARY COVER	TEMPORARY DRAINAGE INLET PROTECTION	TEMPORARY FIBER ROLL	TEMPORARY REINFORCED SILT FENCE	TEMPORARY CONSTRUCTION ENTRANCE
	SQYD		EA	LF		EA
"AE" 311+00 TO 347+00	4000	400	9	3000	4120	4

TEMPORARY WATER POLLUTION CONTROL PLAN

SCALE 1" = 50'

APPROVED FOR TEMPORARY WATER POLLUTION CONTROL WORK ONLY

WPC-1

STATE OF CALIFORNIA - DEPARTMENT OF TRANSPORTATION
Caltrans® WATER QUALITY

FUNCTIONAL SUPERVISOR: KAMRAN NAKHJIRI
CALCULATED-DESIGNED BY: SHARON YUAN
CHECKED BY: KAMRAN NAKHJIRI
REVISED BY: SY
DATE REVISED: 2/2/15

LAST REVISION 05-18-15
DATE PLOTTED => 09-JUN-2015
TIME PLOTTED => 15:49

Dist	COUNTY	ROUTE	POST MILES TOTAL PROJECT	SHEET No.	TOTAL SHEETS
04	Ala	580	R4.0	11	58

REGISTERED CIVIL ENGINEER 3/11/15 DATE

6-1-15
PLANS APPROVAL DATE

REGISTERED PROFESSIONAL ENGINEER Carlos M. Mora No. 61224 Exp. 6-30-15 CIVIL STATE OF CALIFORNIA

THE STATE OF CALIFORNIA OR ITS OFFICERS OR AGENTS SHALL NOT BE RESPONSIBLE FOR THE ACCURACY OR COMPLETENESS OF SCANNED COPIES OF THIS PLAN SHEET.

NOTE:

FOR ACCURATE RIGHT OF WAY DATA, CONTACT RIGHT OF WAY ENGINEERING AT THE DISTRICT OFFICE.

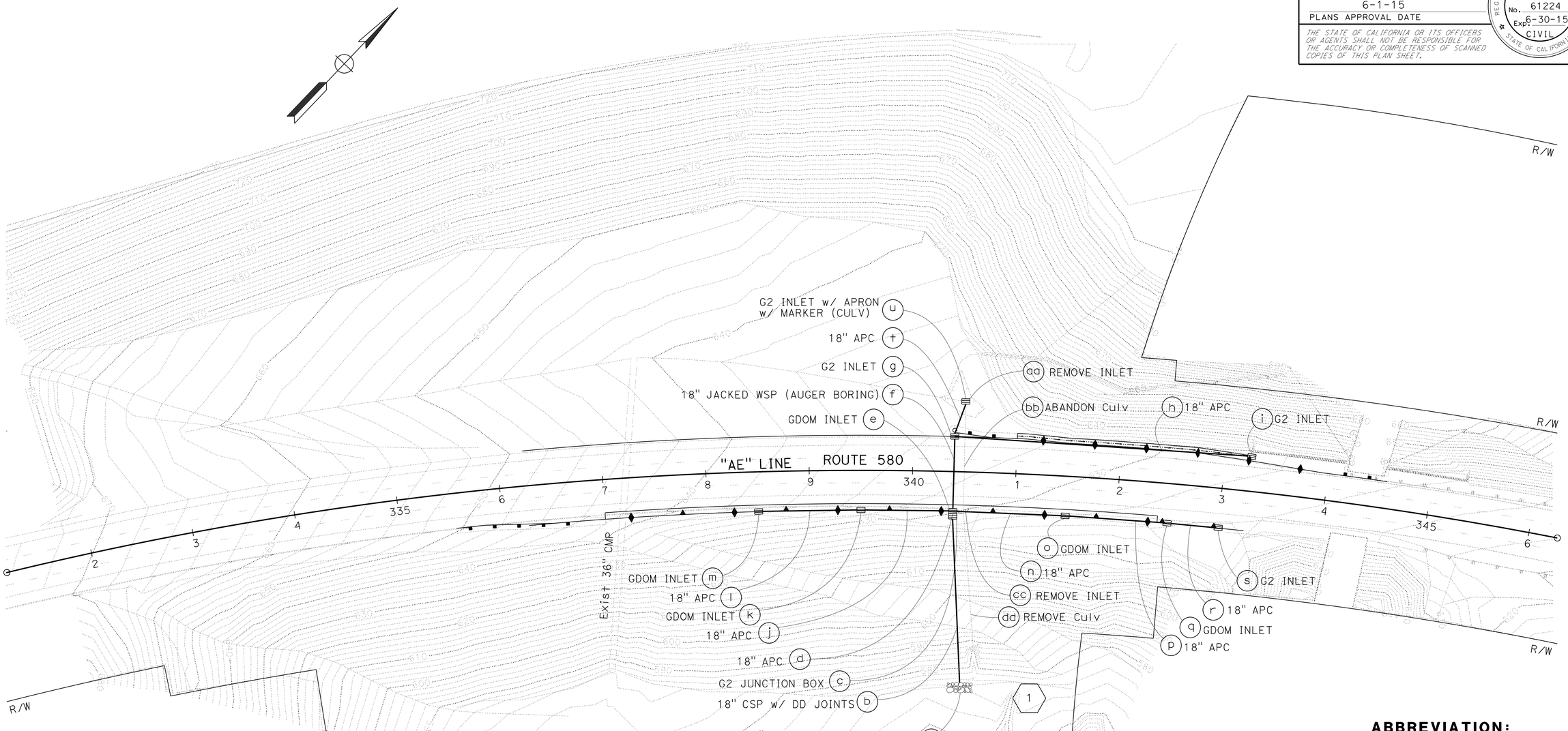

ABBREVIATION:

w/ WITH

LEGEND:

RSP

DRAINAGE PLAN

SCALE: 1" = 50'

APPROVED FOR DRAINAGE WORK ONLY

D-1

REVISED BY	CM
DATE REVISED	7/30/14
CARLOS M. MORA	
CRAIG TOMIMATSU	
CALCULATED-DESIGNED BY	
CHECKED BY	
FUNCTIONAL SUPERVISOR	CRAIG TOMIMATSU

STATE OF CALIFORNIA - DEPARTMENT OF TRANSPORTATION

Caltrans

HYDRAULICS

LAST REVISION 04-15-15 | DATE PLOTTED => 09-JUN-2015 | TIME PLOTTED => 15:49

Dist	COUNTY	ROUTE	POST MILES TOTAL PROJECT	SHEET No.	TOTAL SHEETS
04	Ala	580	R4.0	12	58

REGISTERED CIVIL ENGINEER DATE 3/10/15

6-1-15
PLANS APPROVAL DATE

REGISTERED PROFESSIONAL ENGINEER Qi Fu No. 73343 Exp. 12-31-16 CIVIL STATE OF CALIFORNIA

THE STATE OF CALIFORNIA OR ITS OFFICERS OR AGENTS SHALL NOT BE RESPONSIBLE FOR THE ACCURACY OR COMPLETENESS OF SCANNED COPIES OF THIS PLAN SHEET.

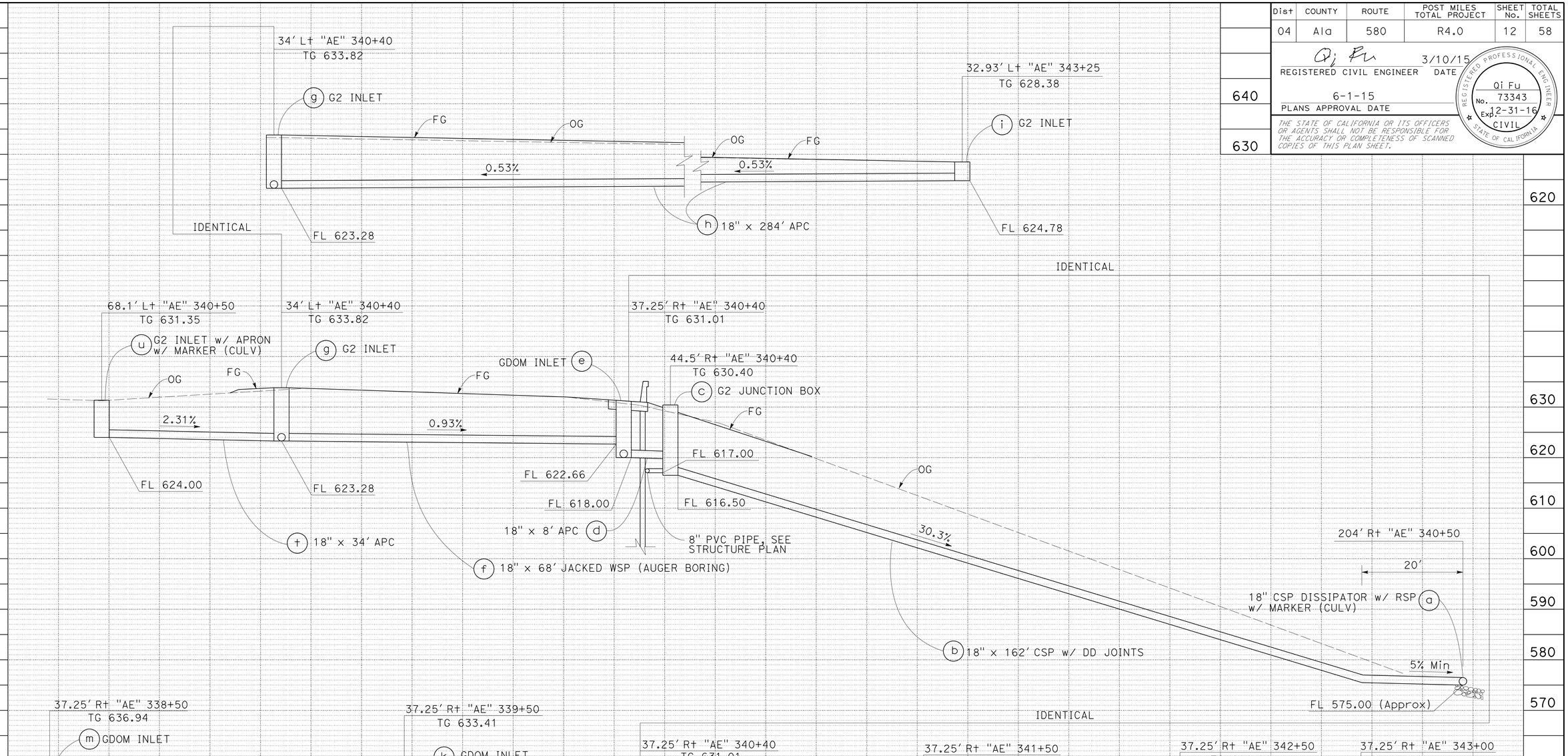

DRAINAGE SYSTEM No. 1

DRAINAGE PROFILES

SCALE: Horiz 1" = 10'
Vert 1" = 10'

DP-1

REVISED BY	DATE REVISED
QF	11/18/14

CALCULATED-DESIGNED BY	CHECKED BY
QI FU	KIRT MORET

FUNCTIONAL SUPERVISOR: KENDALL KITAMURA

STATE OF CALIFORNIA - DEPARTMENT OF TRANSPORTATION
Caltrans®
DESIGN

LAST REVISION 04-27-15 | DATE PLOTTED => 09-JUN-2015 | TIME PLOTTED => 15:49

Dist	COUNTY	ROUTE	POST MILES TOTAL PROJECT	SHEET No.	TOTAL SHEETS
04	Ala	580	R4.0	13	58

REGISTERED CIVIL ENGINEER 3/11/15 DATE

6-1-15
PLANS APPROVAL DATE

REGISTERED PROFESSIONAL ENGINEER Carlos M. Mora No. 61224 Exp. 6-30-15 CIVIL STATE OF CALIFORNIA

THE STATE OF CALIFORNIA OR ITS OFFICERS OR AGENTS SHALL NOT BE RESPONSIBLE FOR THE ACCURACY OR COMPLETENESS OF SCANNED COPIES OF THIS PLAN SHEET.

NOTE:
FOR FRAME AND GRATE DETAILS NOT SHOWN,
SEE REVISED STANDARD PLAN D77A.

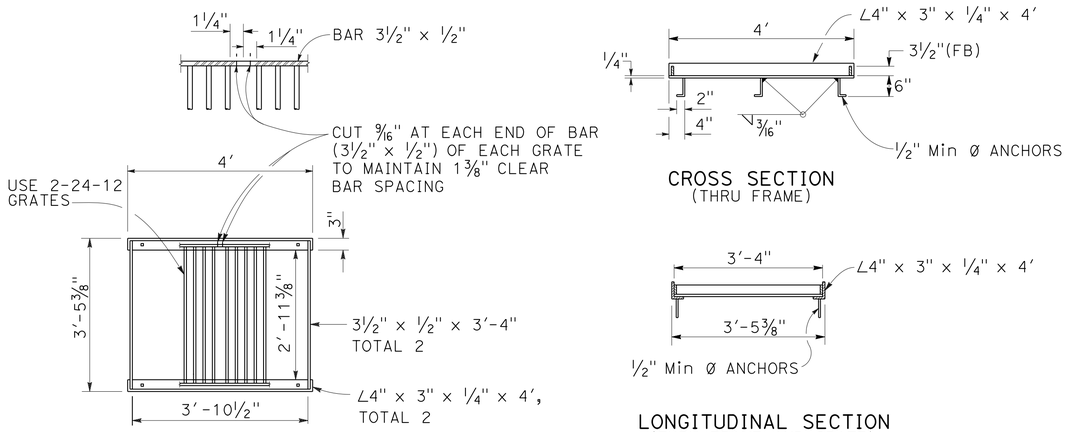

MODIFIED GRATE FRAME DETAIL

1 e k m o q

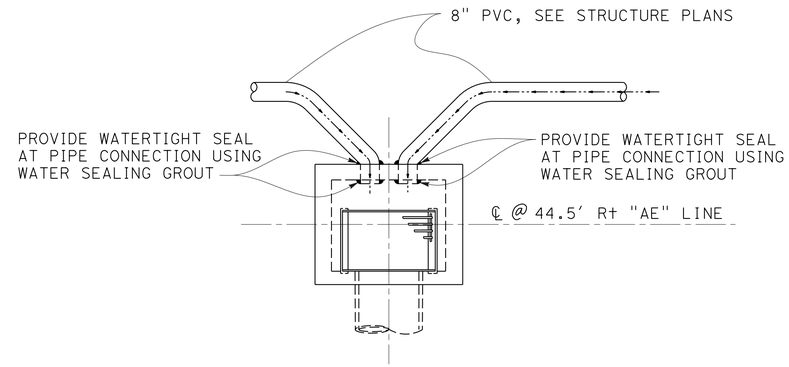

HORIZONTAL DRAIN COLLECTOR TO G2 JUNCTION BOX

1 c

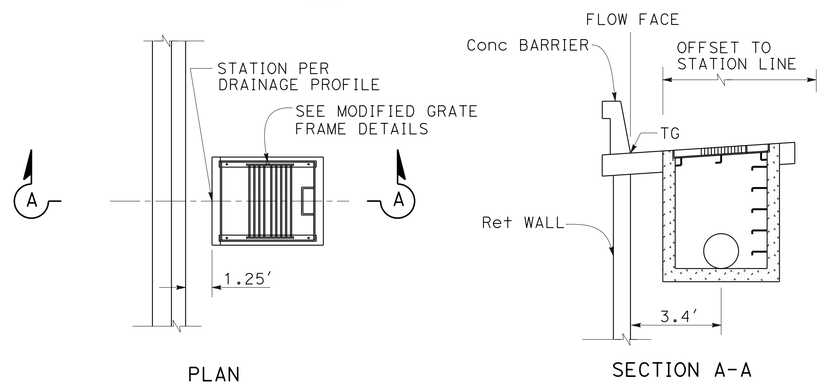

NOTE:
FOR INLET DETAILS NOT SHOWN,
SEE STANDARD PLAN D74B.

GDOM AND G2 INLETS

1 e k m o q s

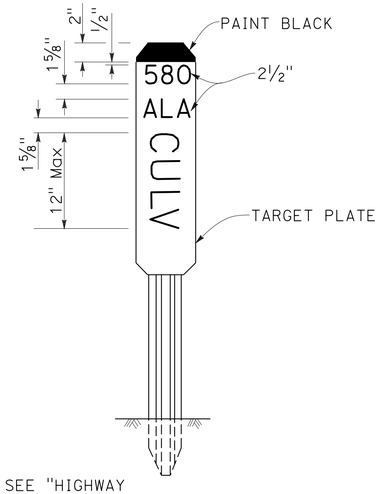

NOTE:
FOR DETAILS NOT SHOWN, SEE "HIGHWAY POST MARKER", STANDARD PLAN A73B.

FRONT

CULVERT MARKER

1 a u

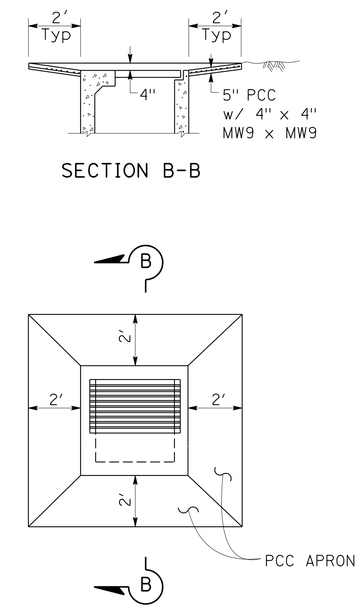

G2 INLET WITH DEPRESSION APRON IN UNPAVED AREA

1 u

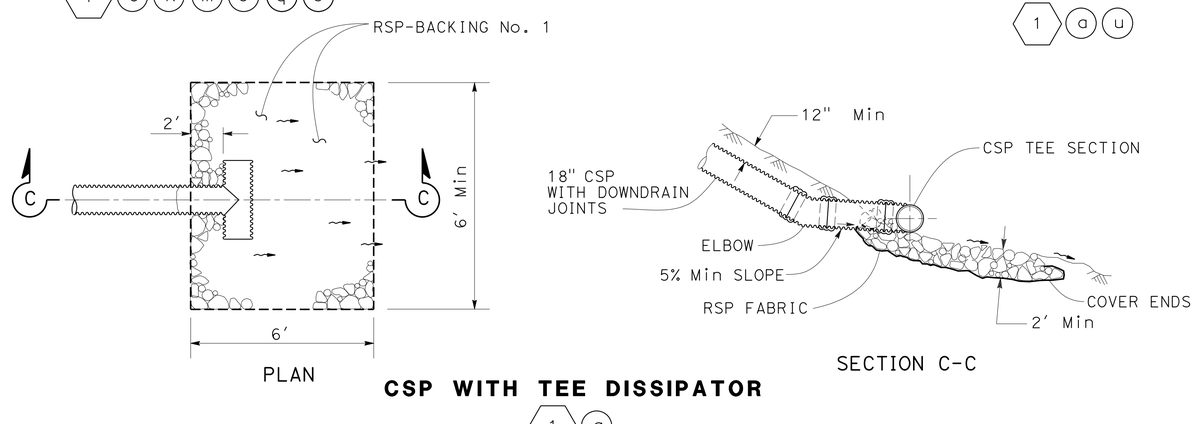

CSP WITH TEE DISSIPATOR

1 a

DRAINAGE DETAILS

NO SCALE

DD-1

NOTE:
FOR INLET DETAILS NOT SHOWN,
SEE STANDARD PLAN D74B.

STATE OF CALIFORNIA - DEPARTMENT OF TRANSPORTATION
Caltrans
HYDRAULICS

FUNCTIONAL SUPERVISOR: CRAIG TOMIMATSU
CALCULATED-DESIGNED BY: CARLOS M. MORA
CHECKED BY: CRAIG TOMIMATSU
REVISED BY: CM
DATE REVISED: 7/30/14

LAST REVISION 04-27-15
DATE PLOTTED => 09-JUN-2015
TIME PLOTTED => 15:49

Dist	COUNTY	ROUTE	POST MILES TOTAL PROJECT	SHEET No.	TOTAL SHEETS
04	Ala	580	R4.0	14	58

REGISTERED CIVIL ENGINEER DATE 3/10/15

6-1-15
PLANS APPROVAL DATE

REGISTERED PROFESSIONAL ENGINEER Qi Fu No. 73343 Exp. 12-31-16 CIVIL STATE OF CALIFORNIA

THE STATE OF CALIFORNIA OR ITS OFFICERS OR AGENTS SHALL NOT BE RESPONSIBLE FOR THE ACCURACY OR COMPLETENESS OF SCANNED COPIES OF THIS PLAN SHEET.

APC ALLOWABLE PIPE MATERIAL AND PROTECTION

DESIGNATION	RCP **	PLASTIC (TYPE S OR C) ***	CSP POLY SHEET COATED * THICK (INCHES)
18" APC	YES	YES	0.064

CSP POLYSHEET COATED

* EITHER HELICAL OR ANNULAR CORRUGATIONS ARE ALLOWABLE.

** FOR MINIMUM ALLOWABLE CLASS OF RCP, SEE STANDARD PLAN A62D.

*** ALLOWABLE PLASTIC PIPE OPTION SHALL BE SMOOTH INTERIOR WALL TYPES OR CORRUGATED INTERIOR WALL TYPES.

DRAINAGE QUANTITIES

DRAINAGE SHEET No.	DRAINAGE SYSTEM No. ⬡	DRAINAGE UNIT ○	TYPE 24-12 FRAME AND GRATE (N)	MISCELLANEOUS IRON AND STEEL	ROCK SLOPE PROTECTION FABRIC (CLASS 8)	ROCK SLOPE PROTECTION (BACKING No. 1 METHOD B)	MINOR CONCRETE (MINOR STRUCTURE)	MINOR CONCRETE (MISCELLANEOUS CONSTRUCTION)	PIPE JOINT CLASSIFICATION (N)	MAXIMUM COVER (N)	HEIGHT OF INLET	18" CSP (0.079' THICK)	18" APC	18" JACKED WSP (AUGER BORING)	MARKER (CULV)	REMOVE INLET	REMOVE CULVERT	ABANDON CULVERT	DESCRIPTION	STATION	DRAINAGE SYSTEM No. ⬡	DRAINAGE UNIT ○
			EA	LB	SQYD	CY				LF					EA							
D-1	1	a			5.5	2.7						6			1				18" CSP DISSIPATOR w/ RSP w/ MARKER (CULV)	204' Rt "AE" 340+50	1	a
		b							DD	13.90		162							18" CSP w/ DD JOINTS			b
		c	1	326			5.6				13.90								G2 JUNCTION BOX	44.5' Rt "AE" 340+40		c
		d							S	11.51			8						18" APC			d
		e	2	634			6.6				13.01								GDOM INLET	37.25' Rt "AE" 340+40		e
		f							S	10.54				68					18" JACKED WSP (AUGER BORING)			f
		g	1	326			4.4				10.54								G2 INLET	34' Lt "AE" 340+40		g
		h							S	10.54			284						18" APC			h
		i	1	326			1.5				3.71								G2 INLET	32.93' Lt "AE" 343+25		i
		j							S	11.51			88						18" APC			j
		k	2	634			6.6				13.01								GDOM INLET	37.25' Rt "AE" 339+50		k
		l							S	11.51			98						18" APC			l
		m	2	634			6.6				13.01								GDOM INLET	37.25' Rt "AE" 338+50		m
		n							S	11.51			108						18" APC			n
		o	2	634			5.3				10.08								GDOM INLET	37.25' Rt "AE" 341+50		o
		p							S	8.58			98						18" APC			p
		q	2	634			3.2				7.93								GDOM INLET	37.25' Rt "AE" 342+50		q
		r							S	6.43			52						18" APC			r
		s	1	326			2.5				7.55								G2 INLET	37.25' Rt "AE" 343+00		s
		t							S	10.54			34						18" APC			t
		u	1	326			2.4	1.04			7.35				1				G2 INLET w/ APRON w/ MARKER (CULV)	68.1' Lt "AE" 340+50		u
		aa														1			REMOVE INLET			aa
		bb																1	REMOVE INLET			bb
		cc														1			REMOVE INLET			cc
		dd															1		REMOVE INLET			dd
TOTAL				4800	5.5	2.7	44.7	1.04				168	770	68	2	2	1	1	TOTAL			

(N) NOT A SEPARATE PAY ITEM, FOR INFORMATION ONLY

DRAINAGE QUANTITIES

DQ-1

STATE OF CALIFORNIA - DEPARTMENT OF TRANSPORTATION
Caltrans® DESIGN

FUNCTIONAL SUPERVISOR: KENDALL KITAMURA
CALCULATED-DESIGNED BY: QI FU
CHECKED BY: KIRT MORET
REVISED BY: QF
DATE REVISED: 11/18/14

LAST REVISION 04-27-15 | DATE PLOTTED => 09-JUN-2015 | TIME PLOTTED => 15:49

Dist	COUNTY	ROUTE	POST MILES TOTAL PROJECT	SHEET No.	TOTAL SHEETS
04	Ala	580	R4.0	15	58

Jeri-Paul Fabian 3/11/15
REGISTERED CIVIL ENGINEER DATE

6-1-15
PLANS APPROVAL DATE

REGISTERED PROFESSIONAL ENGINEER Jeri-Paul F. Fabian No. 81174 Exp. 9-30-15 CIVIL STATE OF CALIFORNIA

THE STATE OF CALIFORNIA OR ITS OFFICERS OR AGENTS SHALL NOT BE RESPONSIBLE FOR THE ACCURACY OR COMPLETENESS OF SCANNED COPIES OF THIS PLAN SHEET.

CONSTRUCTION AREA SIGNS

SIGN No.	MUTCD CODE	MESSAGE	PANEL SIZE	NUMBER OF POST AND SIZE	No. OF SIGNS	REMARKS
A	W20-1	ROAD WORK AHEAD	48" x 48"	(ONE) 4" x 6"	2	
B	G20-2	END ROAD WORK	48" x 24"	(ONE) 4" x 4"	1	
1	W21-5	SHOULDER WORK	48" x 48"	(ONE) 4" x 6"	2	SEE SHEETS SC-1 AND 2
2	W21-5bR	RIGHT SHOULDER CLOSED AHEAD	48" x 48"	(ONE) 4" x 6"	1	SEE SHEET SC-1
3	W21-5bL	LEFT SHOULDER CLOSED AHEAD	48" x 48"	(ONE) 4" x 6"	1	SEE SHEET SC-2
4	C30A(CA)	SHOULDER CLOSED	48" x 48"	(ONE) 6" x 6"	2	SEE SHEETS SC-1 AND 2
	W16-4	NEXT 1000 FT	30" x 24"			

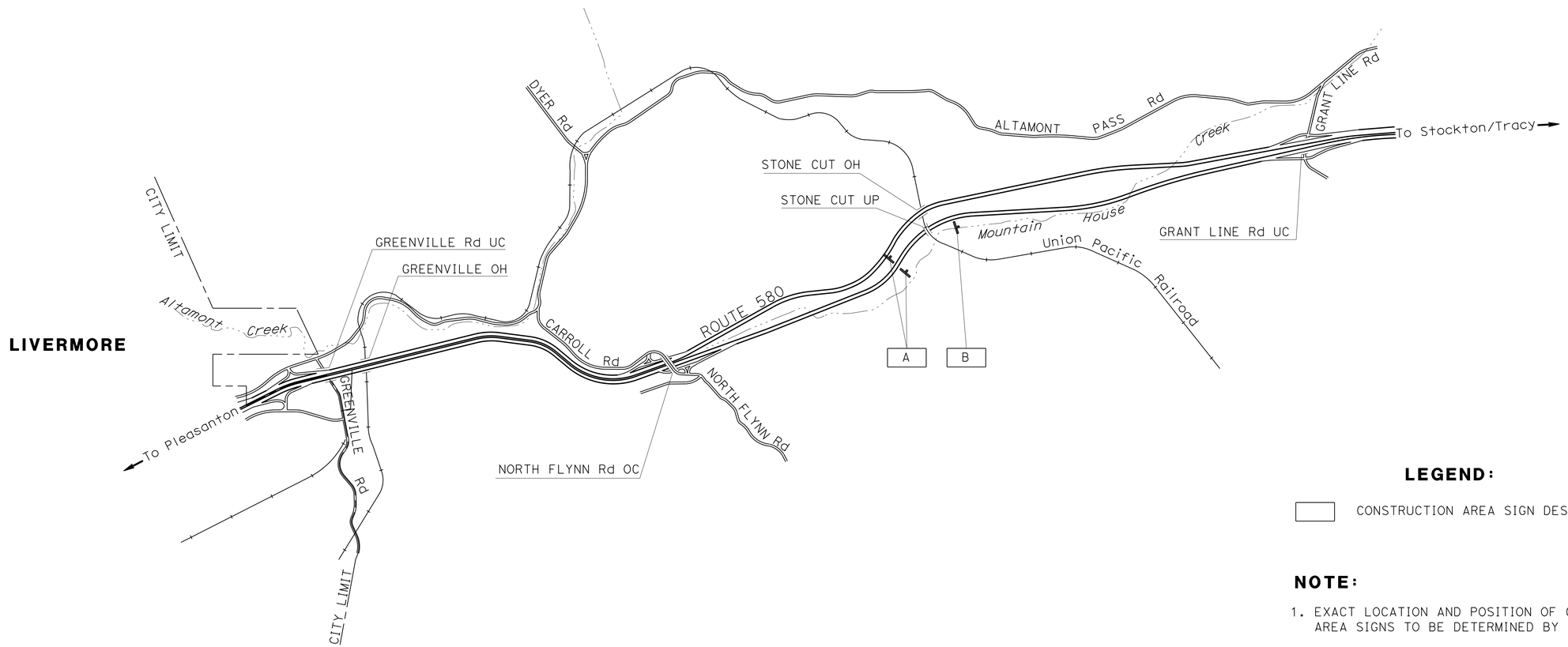

LEGEND:

☐ CONSTRUCTION AREA SIGN DESIGNATION

NOTE:

1. EXACT LOCATION AND POSITION OF CONSTRUCTION AREA SIGNS TO BE DETERMINED BY THE ENGINEER.

APPROVED FOR CONSTRUCTION AREA SIGN WORK ONLY

CONSTRUCTION AREA SIGNS

NO SCALE

CS-1

JERI-PAUL FABIAN	JF
REVISED BY	DATE REVISED 11/18/14
CALCULATED-DESIGNED BY	CLAUDIA FANG
CHECKED BY	
FUNCTIONAL SUPERVISOR	LOURDES DAVID

STATE OF CALIFORNIA - DEPARTMENT OF TRANSPORTATION
Caltrans
TRAFFIC

LAST REVISION 11-18-14 | DATE PLOTTED => 09-JUN-2015 | TIME PLOTTED => 15:49

Dist	COUNTY	ROUTE	POST MILES TOTAL PROJECT	SHEET No.	TOTAL SHEETS
04	Ala	580	R4.0	16	58

REGISTERED CIVIL ENGINEER 3/10/15 DATE

6-1-15
PLANS APPROVAL DATE

REGISTERED PROFESSIONAL ENGINEER Qi Fu No. 73343 Exp. 12-31-16 CIVIL STATE OF CALIFORNIA

THE STATE OF CALIFORNIA OR ITS OFFICERS OR AGENTS SHALL NOT BE RESPONSIBLE FOR THE ACCURACY OR COMPLETENESS OF SCANNED COPIES OF THIS PLAN SHEET.

STAGE 1 CONSTRUCTION

1a CONSTRUCT RETAINING WALL WITH CONCRETE SLAB
1b CONSTRUCT CONCRETE BARRIER (TYPE 742)
1c CONSTRUCT AC OUTSIDE SHOULDER
1d JACK 18" WSP (AUGER BORING)
1e DRAINAGE ELEMENTS AT OUTSIDE

STAGE 2 CONSTRUCTION

2a CONSTRUCT AC INSIDE SHOULDER
2b CONSTRUCT DRAINING ELEMENTS AT INSIDE
2c CONSTRUCT CONCRETE BARRIER (TYPE 60C)

STAGE 3 CONSTRUCTION

3a CONSTRUCT CONCRETE PAVEMENT (JPCP-RSC)
3b PAVEMENT DELINEATION

LEGEND:

TEMPORARY CRASH CUSHION ARRAY "TS14"
CHANNELIZER
OBJECT MARKER (TYPE P)
PORTABLE FLASHING BEACON
CONSTRUCTION
No. CONSTRUCTION AREA SIGN NUMBER

NOTES:

1. SEE CONSTRUCTION AREA SIGNS (CS-1) FOR TEMPORARY SIGNS.
2. EXACT LOCATION AND POSITION OF CONSTRUCTION AREA SIGNS TO BE DETERMINED BY THE ENGINEER.
3. FOR DETAIL 13MS, SEE SHEET PD-1.

ABBREVIATION:

RSP RAPID STRENGTH CONCRETE

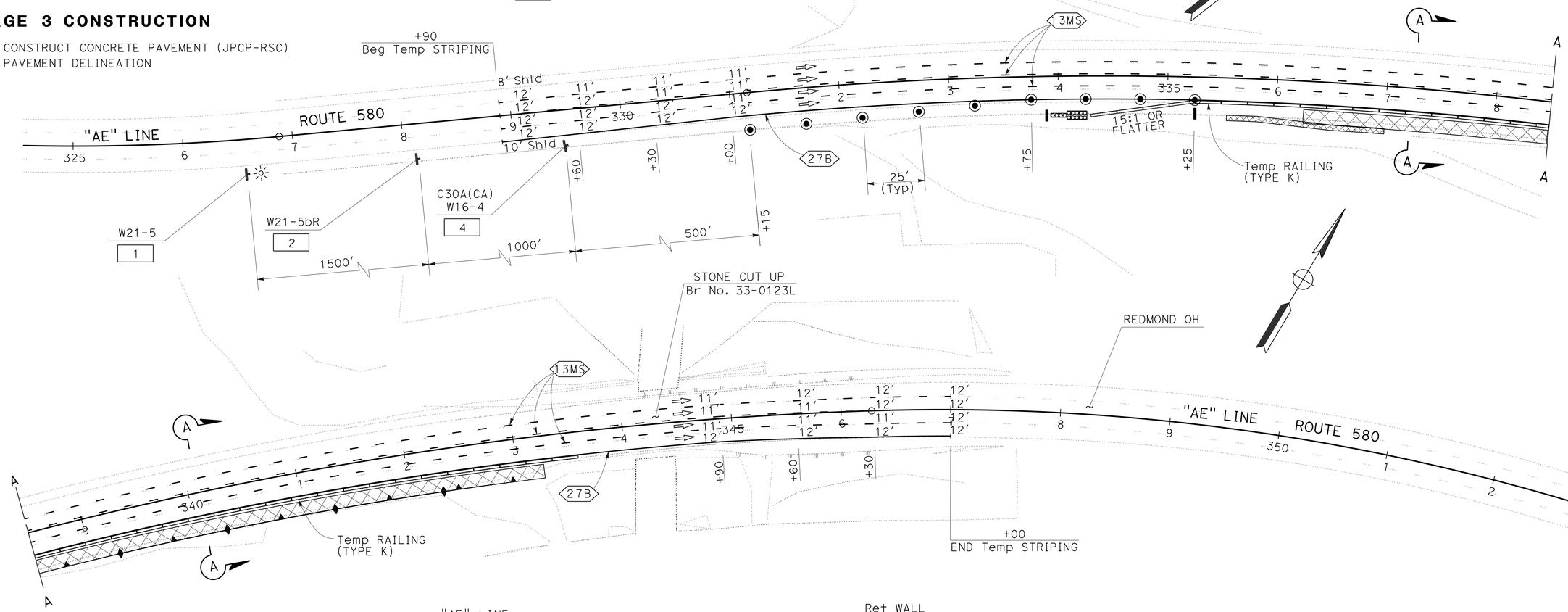

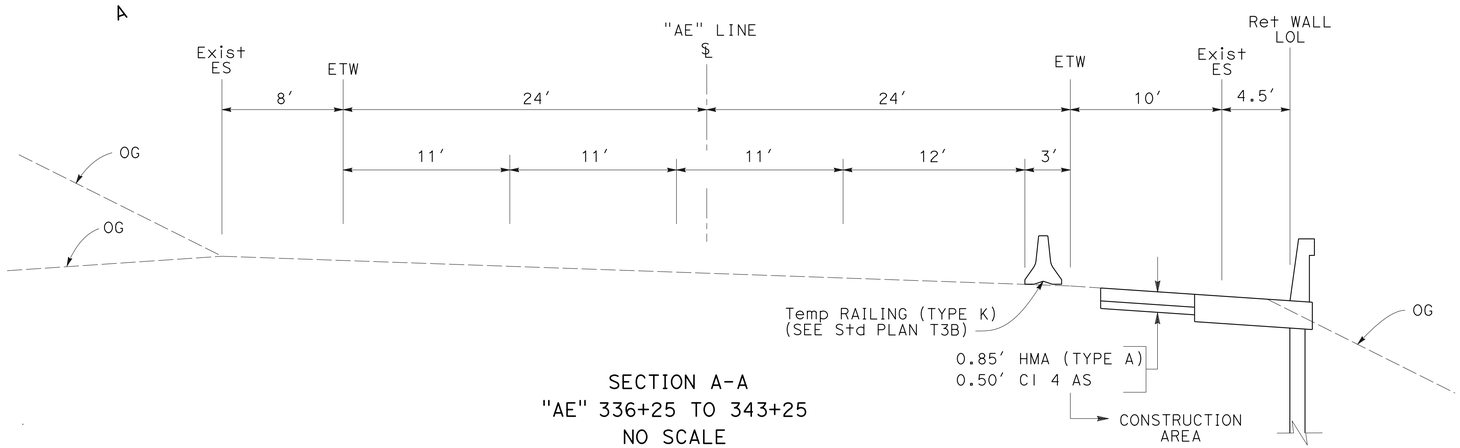

SECTION A-A
"AE" 336+25 TO 343+25
NO SCALE

APPROVED FOR STAGE CONSTRUCTION AND TRAFFIC HANDLING WORK ONLY

STAGE CONSTRUCTION AND TRAFFIC HANDLING PLAN
STAGE 1
SCALE: 1" = 50'

SC-1

REVISED BY	DATE REVISED
QF	11/18/14

CALCULATED-DESIGNED BY: QI FU
CHECKED BY: KIRT MORET
FUNCTIONAL SUPERVISOR: KENDALL KITAMURA

STATE OF CALIFORNIA - DEPARTMENT OF TRANSPORTATION
Caltrans
DESIGN

LAST REVISION 05-11-15
DATE PLOTTED => 09-JUN-2015
TIME PLOTTED => 15:49

Dist	COUNTY	ROUTE	POST MILES TOTAL PROJECT	SHEET No.	TOTAL SHEETS
04	Ala	580	R4.0	17	58

REGISTERED CIVIL ENGINEER DATE 3/10/15

6-1-15
PLANS APPROVAL DATE

REGISTERED PROFESSIONAL ENGINEER Qi Fu No. 73343 Exp. 12-31-16 CIVIL STATE OF CALIFORNIA

THE STATE OF CALIFORNIA OR ITS OFFICERS OR AGENTS SHALL NOT BE RESPONSIBLE FOR THE ACCURACY OR COMPLETENESS OF SCANNED COPIES OF THIS PLAN SHEET.

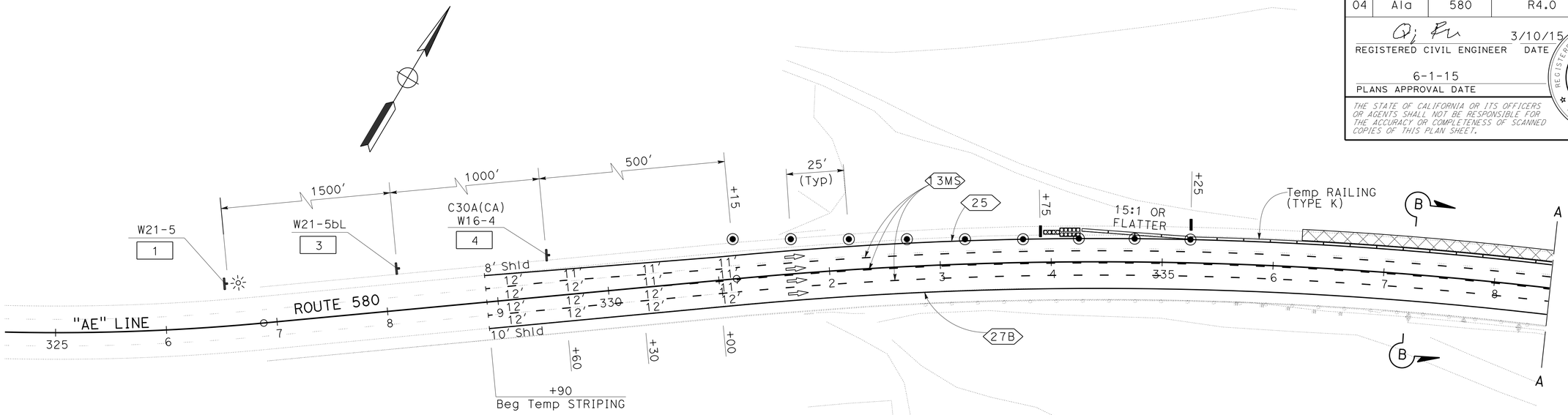

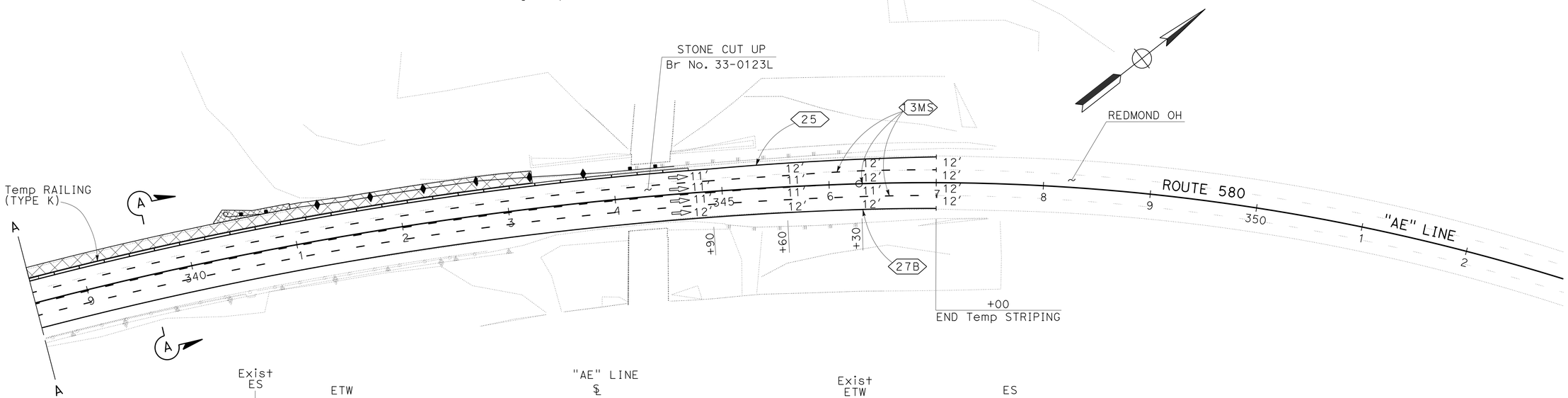

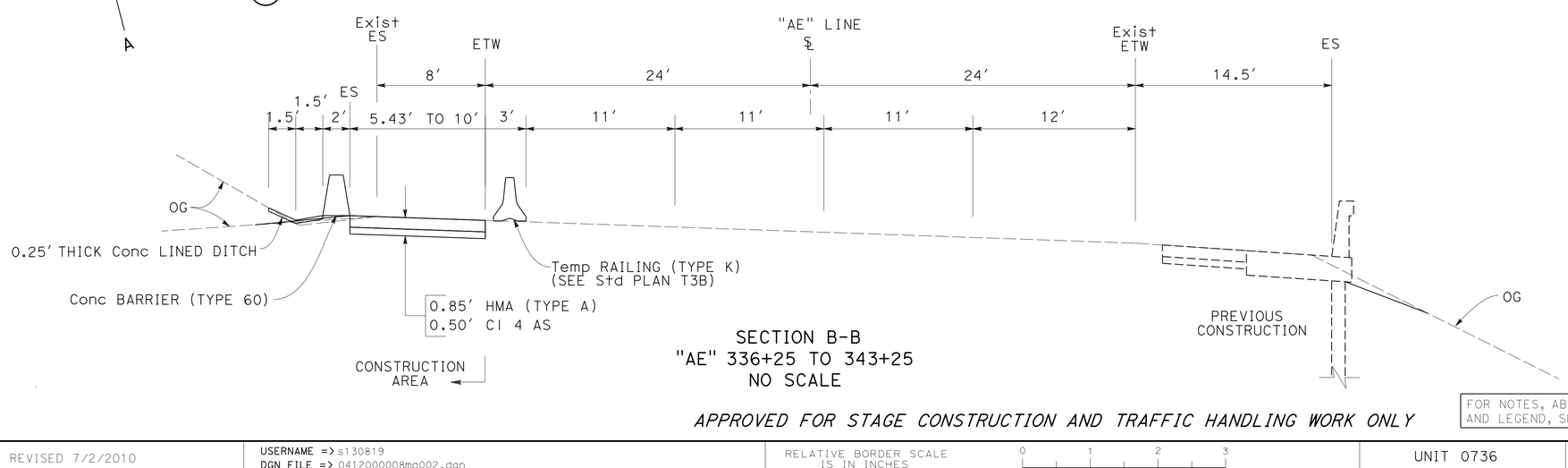

SECTION B-B
"AE" 336+25 TO 343+25
NO SCALE

STAGE CONSTRUCTION AND TRAFFIC HANDLING PLAN

STAGE 2

SCALE: 1" = 50'

APPROVED FOR STAGE CONSTRUCTION AND TRAFFIC HANDLING WORK ONLY

FOR NOTES, ABBREVIATIONS AND LEGEND, SEE SHEET SC-1

SC-2

QF	11/18/14
REVISED BY	DATE REVISED
QI FU	KIRT MORET
CALCULATED-DESIGNED BY	CHECKED BY
FUNCTIONAL SUPERVISOR	KENDALL KITAMURA

STATE OF CALIFORNIA - DEPARTMENT OF TRANSPORTATION

Caltrans

DESIGN

LAST REVISION 03-06-15 | DATE PLOTTED => 09-JUN-2015 | TIME PLOTTED => 15:49

Dist	COUNTY	ROUTE	POST MILES TOTAL PROJECT	SHEET No.	TOTAL SHEETS
04	Ala	580	R4.0	18	58

REGISTERED CIVIL ENGINEER 3/11/15 DATE

6-1-15
PLANS APPROVAL DATE

REGISTERED PROFESSIONAL ENGINEER Shi F. Lam No. 50970 Exp. 9-30-15 CIVIL STATE OF CALIFORNIA

THE STATE OF CALIFORNIA OR ITS OFFICERS OR AGENTS SHALL NOT BE RESPONSIBLE FOR THE ACCURACY OR COMPLETENESS OF SCANNED COPIES OF THIS PLAN SHEET.

NOTE:

FOR ACCURATE RIGHT OF WAY DATA, CONTACT RIGHT OF WAY ENGINEERING AT THE DISTRICT OFFICE.

LEGEND:

BG BG CONCRETE BARRIER MARKER TYPE (F AND G)

RG RG GUARD RAILING DELINEATOR TYPE (F AND G)

L-1 OBJECT MARKER (TYPE L-1)

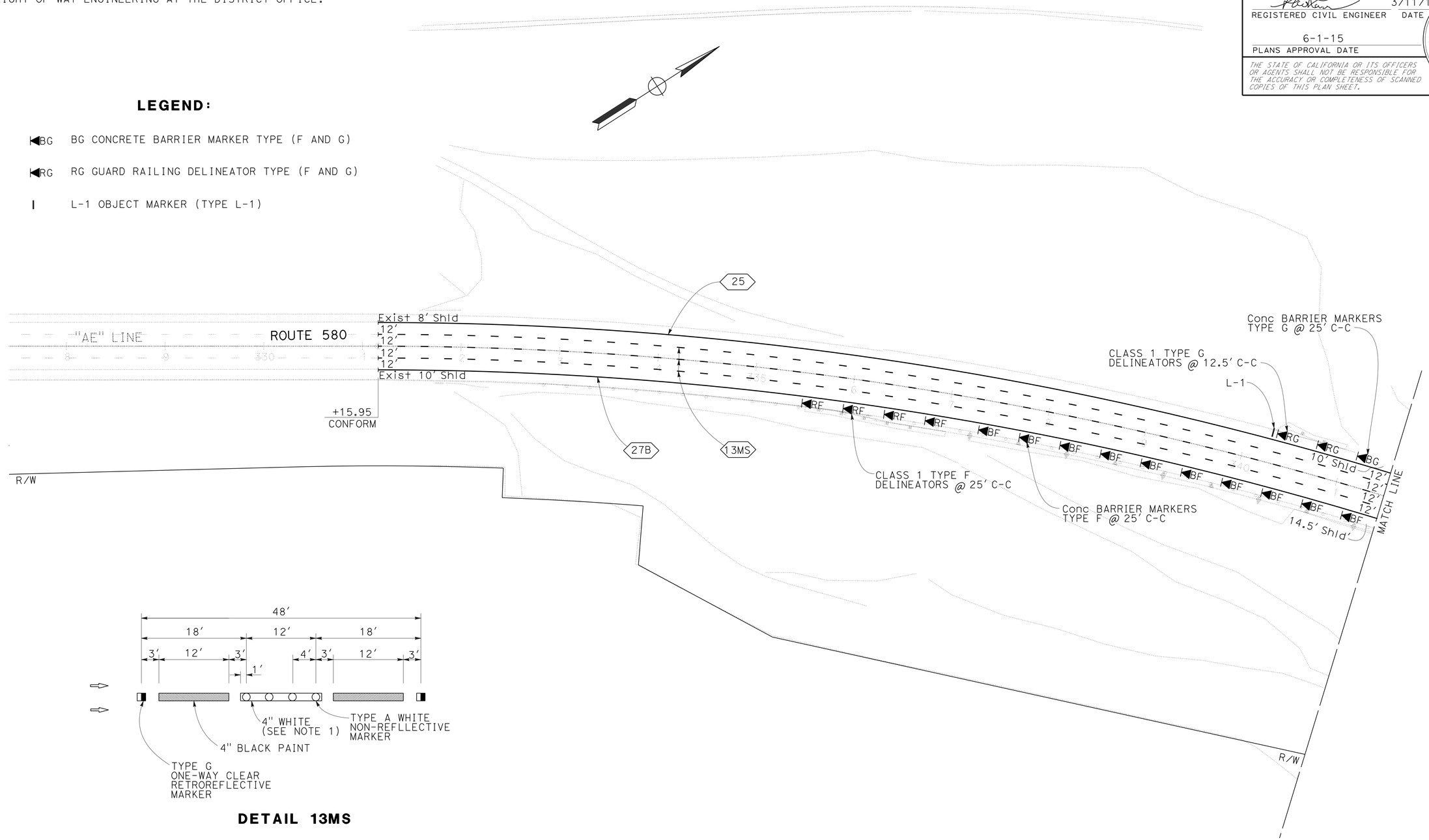

DETAIL 13MS

NOTES:

1. INSTALL 4" WHITE AFTER INSTALLING PAVEMENT MARKERS.
2. FOR DETAILS NOT SHOWN, SEE STANDARD PLAN A20A.

PAVEMENT DELINEATION PLAN

SCALE: 1" = 50'

APPROVED FOR PAVEMENT DELINEATION WORK ONLY

PD-1

STATE OF CALIFORNIA - DEPARTMENT OF TRANSPORTATION
Caltrans
TRAFFIC

FUNCTIONAL SUPERVISOR: EMILY TANG
CALCULATED-DESIGNED BY: SHI LAM
CHECKED BY: QI FU
REVISED BY: SL
DATE REVISED: 11/18/14

LAST REVISION 11-18-14 | DATE PLOTTED => 09-JUN-2015 | TIME PLOTTED => 15:49

Dist	COUNTY	ROUTE	POST MILES TOTAL PROJECT	SHEET No.	TOTAL SHEETS
04	Ala	580	R4.0	19	58

REGISTERED CIVIL ENGINEER 3/11/15 DATE

6-1-15
PLANS APPROVAL DATE

REGISTERED PROFESSIONAL ENGINEER Shi F. Lam No. 50970 Exp. 9-30-15 CIVIL STATE OF CALIFORNIA

THE STATE OF CALIFORNIA OR ITS OFFICERS OR AGENTS SHALL NOT BE RESPONSIBLE FOR THE ACCURACY OR COMPLETENESS OF SCANNED COPIES OF THIS PLAN SHEET.

NOTE:

FOR ACCURATE RIGHT OF WAY DATA, CONTACT RIGHT OF WAY ENGINEERING AT THE DISTRICT OFFICE.

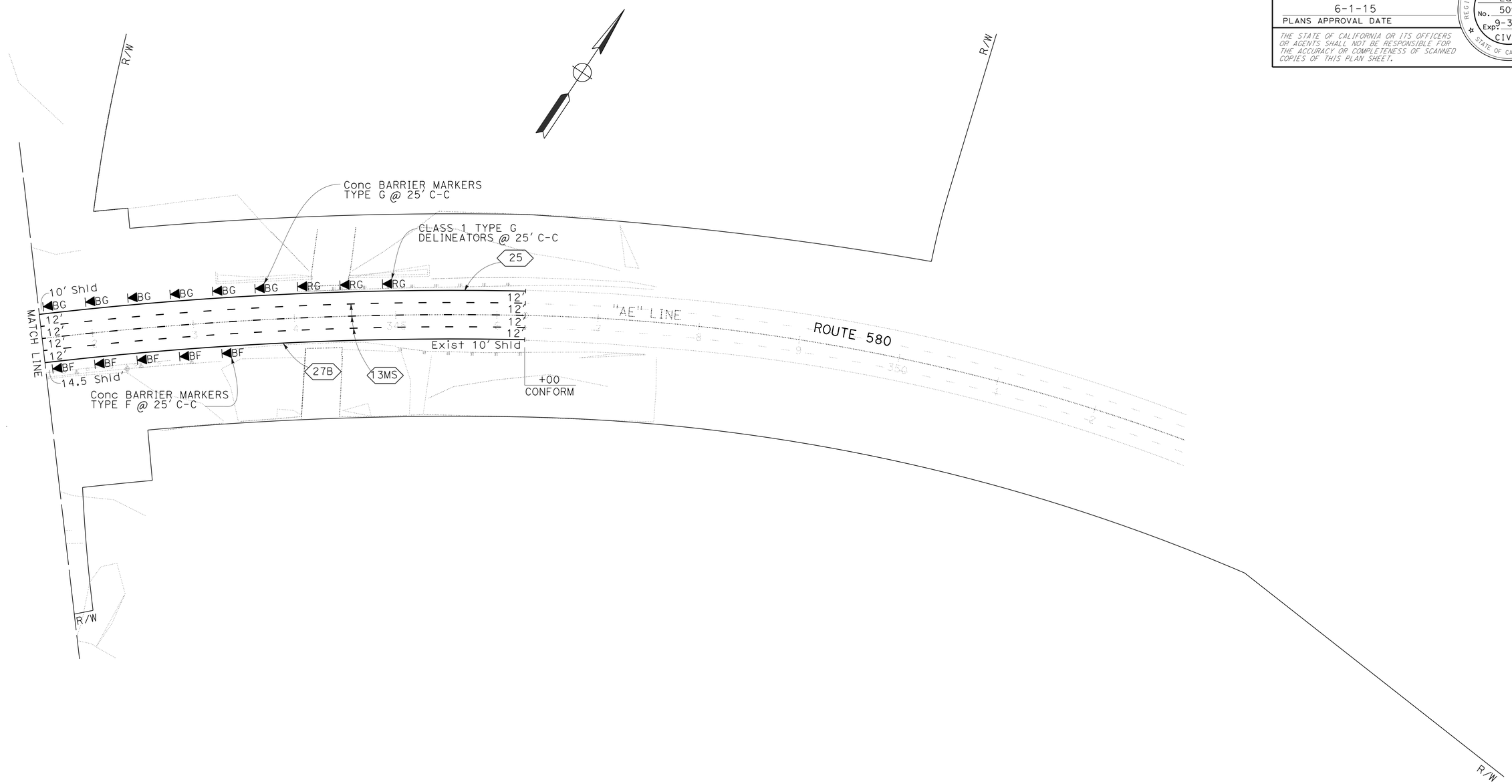

PAVEMENT DELINEATION PLAN

SCALE: 1" = 50'

APPROVED FOR PAVEMENT DELINEATION WORK ONLY

FOR NOTES, ABBREVIATIONS AND LEGEND, SEE SHEET PD-1

PD-2

STATE OF CALIFORNIA - DEPARTMENT OF TRANSPORTATION

Caltrans®

TRAFFIC

FUNCTIONAL SUPERVISOR: EMILY TANG

CALCULATED-DESIGNED BY: SHI LAM

CHECKED BY: QI FU

REVISED BY: SL

DATE REVISED: 11/18/14

LAST REVISION: 11-18-14

DATE PLOTTED => 09-JUN-2015

TIME PLOTTED => 15:49

Dist	COUNTY	ROUTE	POST MILES TOTAL PROJECT	SHEET No.	TOTAL SHEETS
04	Ala	580	R4.0	20	58

Qi Fu 3/10/15
REGISTERED CIVIL ENGINEER DATE

6-1-15
PLANS APPROVAL DATE

REGISTERED PROFESSIONAL ENGINEER Qi Fu No. 73343 Exp. 12-31-16 CIVIL STATE OF CALIFORNIA

THE STATE OF CALIFORNIA OR ITS OFFICERS OR AGENTS SHALL NOT BE RESPONSIBLE FOR THE ACCURACY OR COMPLETENESS OF SCANNED COPIES OF THIS PLAN SHEET.

TRAFFIC STRIPES AND PAVEMENT MARKERS

STATION	DETAIL No.	4" THERMOPLASTIC TRAFFIC STRIPE (ENHANCED WET NIGHT VISIBILITY)			PAINT TRAFFIC STRIPE (2-COAT)	PAVEMENT MARKER			OBJECT MARKER				
		4" YELLOW	4" WHITE	4" WHITE (BROKEN 34-14)	BLACK (BROKEN 18-12-6-12)	NON-REFLECTIVE TYPE A	RETROREFLECTIVE TYPE G	RETROREFLECTIVE TYPE H	GUARD RAIL DELINEATOR TYPE F	GUARD RAIL DELINEATOR TYPE G	CONCRETE BARRIER TYPE F	CONCRETE BARRIER TYPE G	TYPE L-1 (CA)
		LF				EA			EA				
"AE" 328+90 TO 347+00	25	1810						39					
"AE" 328+90 TO 347+00	27B		1810										
"AE" 328+90 TO 347+00	13MS			5340	5340	452	113						
"AE" 335+54.4 TO 337+00									7				
"AE" 337+00 TO 342+40											23		
"AE" 340+37.5 TO 341+00										26			1
"AE" 341+00 TO 344+04.7												13	
"AE" 344+04.7 TO 344+57.8									5				
TOTAL		8960			5340	452	152		74				1

PAVEMENT DELINEATION QUANTITIES

PDQ-1

QF	11/18/14	QI FU	KIRT MORET
REVISED BY	DATE REVISED	CALCULATED-DESIGNED BY	CHECKED BY

FUNCTIONAL SUPERVISOR: KENDALL KITAMURA

STATE OF CALIFORNIA - DEPARTMENT OF TRANSPORTATION
Caltrans
DESIGN

LAST REVISION 11-18-14 | DATE PLOTTED => 09-JUN-2015 | TIME PLOTTED => 15:49

Dist	COUNTY	ROUTE	POST MILES TOTAL PROJECT	SHEET No.	TOTAL SHEETS
04	Ala	580	R4.0	21	58

REGISTERED CIVIL ENGINEER DATE 3/10/15

6-1-15
PLANS APPROVAL DATE

REGISTERED PROFESSIONAL ENGINEER Qi Fu No. 73343 Exp. 12-31-16 CIVIL STATE OF CALIFORNIA

THE STATE OF CALIFORNIA OR ITS OFFICERS OR AGENTS SHALL NOT BE RESPONSIBLE FOR THE ACCURACY OR COMPLETENESS OF SCANNED COPIES OF THIS PLAN SHEET.

ABBREVIATION:

RSC RAPID STRENGTH CONCRETE

ROADWAY EARTHWORK AND PAVEMENT QUANTITIES

SHEET No.	LOCATION	ROADWAY EXCAVATION (TYPE Y-1) (AERIALLY DEPOSITED LEAD)	ROADWAY EXCAVATION (TYPE Z-2) (AERIALLY DEPOSITED LEAD)	ROADWAY EXCAVATION	ROADWAY EMBANKMENT (N)	REMOVE CONCRETE PAVEMENT AND BASE	REMOVE BASE AND SURFACING	REMOVE ROCK SLOPE PROTECTION	CLASS 2 AGGREGATE SUBBASE	LEAN CONCRETE BASE RAPID SETTING	JOINTED PLAIN CONCRETE PAVEMENT (RSC)	HOT MIX ASPHALT (TYPE A)
		CY										TON
L-1	"AE" 336+25 TO 343+25	130	53	2339	2084	1556	340	69	676	338	877	705
	HMA DIKE AND Misc AREA											2.5
TOTAL		130	53	2339		1556	340	69	676	338	877	707.5

(N) NOT A SEPARATE PAY ITEM, FOR INFORMATION ONLY

GUARDRAIL AND CONCRETE BARRIER QUANTITIES

SHEET No.	LOCATION	TREATED WOOD WASTE	REMOVE GUARDRAIL	MIDWEST GUARDRAIL SYSTEM (WOOD POST)	CONCRETE BARRIER (TYPE 60C)	CONCRETE BARRIER (ANCHOR BLOCK)	ALTERNATIVE FLARED TERMINAL SYSTEM	TRANSITION RAILING (TYPE WB-31)	VEGETATION CONTROL (MINOR CONCRETE)
		LB	LF			EA			SQYD
L-1	"AE" 335+54.4 TO 342+75		721						
	"AE" 342+25 TO 344+57.8	5000	233						
	"AE" 341+00 TO 344+04.7				285	20			
	"AE" 335+54.4 TO 337+00			121				1	80
	"AE" 340+37.5 TO 341+00						1	1	51
	"AE" 344+04.7 TO 344+57.8			54					
TOTAL		5000	954	175	285	20	1	2	131

SUMMARY OF QUANTITIES

Q-1

STATE OF CALIFORNIA - DEPARTMENT OF TRANSPORTATION
DESIGN
Caltrans
FUNCTIONAL SUPERVISOR KENDALL KITAMURA
CALCULATED-DESIGNED BY Qi FU
CHECKED BY KIRT MORET
REVISED BY QF
DATE REVISED 11/18/14

LAST REVISION 05-18-15 | DATE PLOTTED => 09-JUN-2015 | TIME PLOTTED => 15:49

Dist	COUNTY	ROUTE	POST MILES TOTAL PROJECT	SHEET No.	TOTAL SHEETS
04	Ala	580	R4.0	22	58

Qi Fu 3/10/15
REGISTERED CIVIL ENGINEER DATE

6-1-15
PLANS APPROVAL DATE

REGISTERED PROFESSIONAL ENGINEER Qi Fu No. 73343 Exp. 12-31-16 CIVIL STATE OF CALIFORNIA

THE STATE OF CALIFORNIA OR ITS OFFICERS OR AGENTS SHALL NOT BE RESPONSIBLE FOR THE ACCURACY OR COMPLETENESS OF SCANNED COPIES OF THIS PLAN SHEET.

HMA DIKE AND CONCRETE DITCH QUANTITIES

LOCATION	HMA DIKE (TYPE F)	PLACE HMA (Misc AREA)	HMA	CONCRETE (DITCH LINING)	DITCH EXCAVATION
	LF	SQYD	TON	CY	
"AE" 335+54.4 TO 337+00	146	8	2.5		
"AE" 341+00 TO 343+25				6.5	9.5
TOTAL	146	8	2.5	6.5	9.5

MISCELLANEOUS QUANTITIES

SHEET No.	DESTROY WELL
	EA
L-1	2

TRAFFIC HANDLING QUANTITIES

SHEET No.	LOCATION	REMOVE THERMOPLASTIC TRAFFIC STRIPE	TEMPORARY RAILING (TYPE K)	TEMPORARY CRASH CUSHION MODULE	CHANNELIZER (SURFACE MOUNTED)	FLASHING BEACON (PORTABLE)	OBJECT MARKER (TYPE P) (N)
		LF		EA			
SC-1	"AE" 331+15 TO 343+50	3394	950	14	17	1	2
SC-2	"AE" 333+75 TO 344+75		1100	14	17	1	2
TOTAL		3394	2050	28	34	2	

(N) NOT A SEPARATE PAY ITEM, FOR INFORMATION ONLY

TEMPORARY TRAFFIC STRIPES AND PAVEMENT MARKERS

SHEET No.	LOCATION	DETAIL No.	TEMPORARY TRAFFIC STRIPE (PAINT)				PAVEMENT MARKER		
			4" YELLOW	4" WHITE	4" BLACK (BROKEN 18-12-6-12)	4" WHITE (BROKEN 34-14)	NON-REFLECTIVE	RETROREFLECTIVE	
							TYPE A	TYPE G	TYPE H
			LF				EA		
SC-1	"AE" 328+90 TO 347+00	13MS, 27B		1810	5430	5430	456	115	39
SC-2	"AE" 328+90 TO 347+00	13MS, 25, 27B	1810	1810	5430	5430	456	115	39
SUBTOTAL			1810	3620	10860	10860	912	230	78
TOTAL			27150				1220		

SUMMARY OF QUANTITIES

Q-2

REVISED BY	DATE REVISED
QF	11/18/14

CALCULATED-DESIGNED BY	CHECKED BY
QI FU	KIRT MORET

FUNCTIONAL SUPERVISOR: KENDALL KITAMURA

STATE OF CALIFORNIA - DEPARTMENT OF TRANSPORTATION
Caltrans
DESIGN

LAST REVISION 03-06-15 | DATE PLOTTED => 09-JUN-2015 | TIME PLOTTED => 15:49

Dist	COUNTY	ROUTE	POST MILES TOTAL PROJECT	SHEET No.	TOTAL SHEETS
04	Ala	580	R4.0	23	58

LICENSED LANDSCAPE ARCHITECT

6-1-15
PLANS APPROVAL DATE

LICENSED LANDSCAPE ARCHITECT
SALLY BANG No. 5280
Expiration Date 11-30-15
Renewal Date 5-24-15
Date
STATE OF CALIFORNIA

THE STATE OF CALIFORNIA OR ITS OFFICERS OR AGENTS SHALL NOT BE RESPONSIBLE FOR THE ACCURACY OR COMPLETENESS OF SCANNED COPIES OF THIS PLAN SHEET.

EROSION CONTROL TYPE 1

SEQUENCE	ITEM	MATERIAL		APPLICATION RATE
		DESCRIPTION	TYPE	
STEP 1	COMPOST	COMPOST	MEDIUM	67 CY/ACRE
STEP 2	HYDROSEED	SEED	MIX 1	49 LB/ACRE
		FIBER	WOOD	1000 LB/ACRE
STEP 3	HYDROMULCH	FIBER	COMBINATION	1000 LB/ACRE
		TACKIFIER	GUAR	125 LB/ACRE

EROSION CONTROL TYPE 2

SEQUENCE	ITEM	MATERIAL		APPLICATION RATE
		DESCRIPTION	TYPE	
STEP 1	RECP (NETTING)	WOVEN COIR	TYPE B	-
STEP 2	HYDROSEED	SEED	MIX 1	49 LB/ACRE
		FIBER	WOOD	1000 LB/ACRE
STEP 3	HYDROMULCH	FIBER	COMBINATION	1000 LB/ACRE
		TACKIFIER	GUAR	125 LB/ACRE

FIBER ROLLS

SEQUENCE	ITEM	MATERIAL		REMARKS
		DESCRIPTION	TYPE	
FIBER ROLLS MUST BE INSTALLED BEFORE HYDROSEEDING	FIBER ROLLS	FIBER ROLL	TYPE B 8" TO 10" Dia	TYPE 2 FIBER ROLL INSTALLATION

SEED MIX 1

BOTANICAL NAME (COMMON NAME)	PERCENT GERMINATION (MINIMUM)	POUNDS PURE LIVE SEED PER ACRE (SLOPE MEASUREMENT)
ACHILLEA MILLEFOLIUM (WESTERN YARROW)	50	3
BROMUS CARINATUS (CALIFORNIA BROME)	40	8
ERIOGONUM FASCICULATUM (CALIFORNIA BUCKWHEAT)	10	2
ESCHSCHOLZIA CALIFORNICA (CALIFORNIA POPPY)	35	2
LUPINUS ARBOREUS (YELLOW BUSH LUPINE)	50	8
SALVIA MELLIFERA (BLACK SAGE)	33	3
STIPA CERNUA (NODDING NEEDLEGRASS)	40	8
STIPA PULCHRA (PURPLE NEEDLEGRASS)	40	10
VULPIA MICROSTACHYS (THREE WEEKS FESCUE)	50	5
TOTAL		49

EROSION CONTROL LEGEND

ECL-1

REVISED BY	DATE REVISED
AK	2/4/15

SALLY BANG — ANGELA KWAN

CALCULATED-DESIGNED BY — CHECKED BY

SENIOR LANDSCAPE ARCHITECT — DAVID YAM

STATE OF CALIFORNIA - DEPARTMENT OF TRANSPORTATION

Caltrans® WATER QUALITY

LAST REVISION 02-04-15 | DATE PLOTTED => 09-JUN-2015 | TIME PLOTTED => 15:50

Dist	COUNTY	ROUTE	POST MILES TOTAL PROJECT	SHEET No.	TOTAL SHEETS
04	Ala	580	R4.0	24	58

Sally Bang
LICENSED LANDSCAPE ARCHITECT

6-1-15
PLANS APPROVAL DATE

LICENSED LANDSCAPE ARCHITECT
SALLY BANG No. 5980
Sally Bang
Signature
11-30-15
Renewal Date
5-24-15
Date
STATE OF CALIFORNIA

THE STATE OF CALIFORNIA OR ITS OFFICERS OR AGENTS SHALL NOT BE RESPONSIBLE FOR THE ACCURACY OR COMPLETENESS OF SCANNED COPIES OF THIS PLAN SHEET.

NOTE:

FOR ACCURATE RIGHT OF WAY DATA, CONTACT RIGHT OF WAY ENGINEERING AT THE DISTRICT OFFICE.

LEGEND:

EROSION CONTROL (TYPE 1)

EROSION CONTROL (TYPE 2)

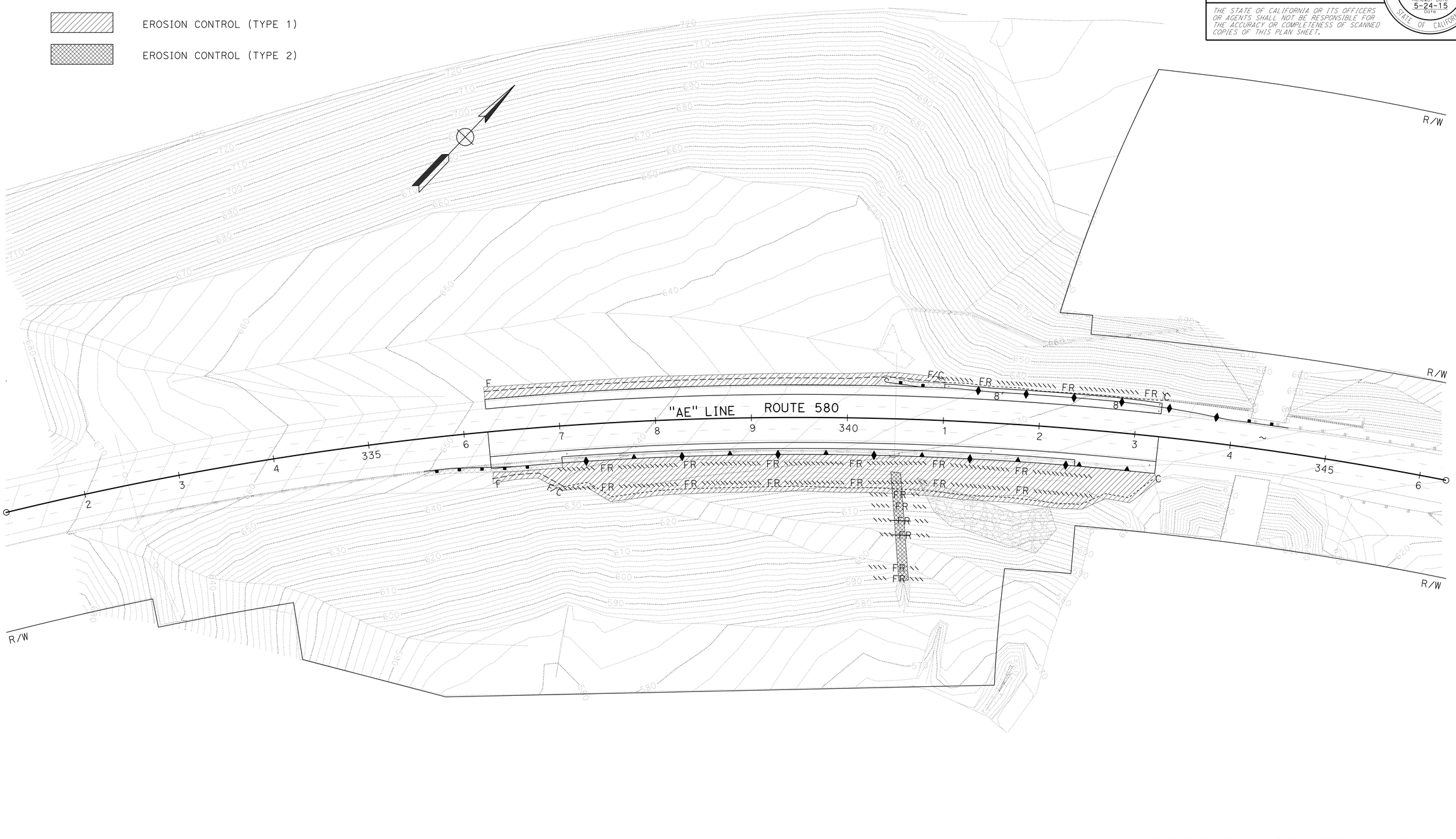

EROSION CONTROL PLAN

SCALE: 1"=50'

APPROVED FOR EROSION CONTROL WORK ONLY

EC-1

REVISED BY	DATE REVISED
AK	2/4/15

CALCULATED-DESIGNED BY: SALLY BANG
CHECKED BY: ANGELA KWAN
SENIOR LANDSCAPE ARCHITECT: DAVID YAM

STATE OF CALIFORNIA - DEPARTMENT OF TRANSPORTATION
Caltrans®
WATER QUALITY

LAST REVISION 02-04-15
DATE PLOTTED => 09-JUN-2015
TIME PLOTTED => 15:50

Dist	COUNTY	ROUTE	POST MILES TOTAL PROJECT	SHEET No.	TOTAL SHEETS
04	Ala	580	R4.0	25	58

LICENSED LANDSCAPE ARCHITECT

6-1-15
PLANS APPROVAL DATE

LICENSED LANDSCAPE ARCHITECT
SALLY BANG No. 5980
Signature
11-30-15
Renewal Date
5-24-15
Date
STATE OF CALIFORNIA

THE STATE OF CALIFORNIA OR ITS OFFICERS OR AGENTS SHALL NOT BE RESPONSIBLE FOR THE ACCURACY OR COMPLETENESS OF SCANNED COPIES OF THIS PLAN SHEET.

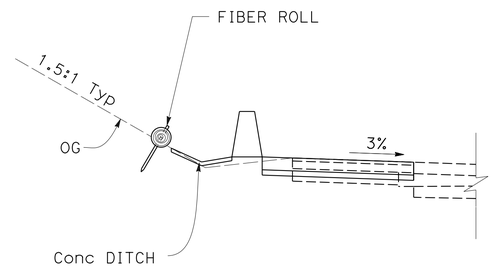

FIBER ROLL INSTALLATION AT CONCRETE DITCH (TYPICAL)

EROSION CONTROL QUANTITIES

SHEET No.	COMPOST	HYDROSEED	HYDROMULCH	ROLLED EROSION CONTROL PRODUCT (NETTING)	FIBER ROLLS
	SQFT				LF
EC-1	30,000	31,000	31,000	1130	1465
TOTAL	30,000	31,000	31,000	1130	1465

EROSION CONTROL DETAILS AND QUANTITIES

NO SCALE

ECD-1

STATE OF CALIFORNIA - DEPARTMENT OF TRANSPORTATION
Caltrans® **WATER QUALITY**

SENIOR LANDSCAPE ARCHITECT: DAVID YAM
CALCULATED-DESIGNED BY: SALLY BANG
CHECKED BY: ANGELA KWAN
REVISED BY: AK
DATE REVISED: 2/4/15

LAST REVISION 02-04-15
DATE PLOTTED => 09-JUN-2015
TIME PLOTTED => 15:50

M

Maint	MAINTENANCE
Max	MAXIMUM
MB	METAL BEAM
MBB	METAL BEAM BARRIER
MBGR	METAL BEAM GUARD RAILING
Med	MEDIAN
MGS	MIDWEST GUARDRAIL SYSTEM
MH	MANHOLE
Min	MINIMUM
Misc	MISCELLANEOUS
Misc I & S	MISCELLANEOUS IRON AND STEEL
Mkr	MARKER
Mod	MODIFIED,
	MODIFY
Mon	MONUMENT
MP	METAL PLATE
MPGR	METAL PLATE GUARD RAILING
MR	MOVEMENT RATING
MSE	MECHANICALLY STABILIZED EMBANKMENT
Mt	MOUNTAIN, MOUNT
Mtl	MATERIAL
MVP	MAINTENANCE VEHICLE PULLOUT

N

N	NORTH
NB	NORTHBOUND
No.	NUMBER (MUST HAVE PERIOD)
Nos.	NUMBERS (MUST HAVE PERIOD)
NPS	NOMINAL PIPE SIZE
NS	NEAR SIDE
NSP	NEW STANDARD PLAN
NTS	NOT TO SCALE

O

Oblr	OBLITERATE
OC	OVERCROSSING
OD	OUTSIDE DIAMETER
OF	OUTSIDE FACE
OG	ORIGINAL GROUND
OGAC	OPEN GRADED ASPHALT CONCRETE
OGFC	OPEN GRADED FRICTION COURSE
OH	OVERHEAD
OHWM	ORDINARY HIGH WATER MARK
O-O	OUT TO OUT
Opp	OPPOSITE
OSD	OVERSIDE DRAIN

P

P	PAGE
PAP	PERFORATED ALUMINUM PIPE
PB	PULL BOX
PC	POINT OF CURVATURE,
	PRECAST
PCC	POINT OF COMPOUND CURVE,
	PORTLAND CEMENT CONCRETE
PCMS	PORTABLE CHANGEABLE MESSAGE SIGN
PCP	PERFORATED CONCRETE PIPE,
	PRESTRESSED CONCRETE PIPE
PCVC	POINT OF COMPOUND VERTICAL CURVE
PEC	PERMIT TO ENTER AND CONSTRUCT
Ped	PEDESTRIAN
Ped OC	PEDESTRIAN OVERCROSSING
Ped UC	PEDESTRIAN UNDERCROSSING
Perm Mtl	PERMEABLE MATERIAL

P continued

PG	PROFILE GRADE
PI	POINT OF INTERSECTION
PJP	PARTIAL JOINT PENETRATION
Pkwy	PARKWAY
ℙ,PL	PLATE
P/L	PROPERTY LINE
PM	POST MILE,
	TIME FROM NOON TO MIDNIGHT
PN	PAVING NOTCH
POC	POINT OF HORIZONTAL CURVE
POT	POINT OF TANGENT
POVC	POINT OF VERTICAL CURVE
PP	PIPE PILE,
	PLASTIC PIPE,
	POWER POLE
PPL	PREFORMED PERMEABLE LINER
PPP	PERFORATED PLASTIC PIPE
PRC	POINT OF REVERSE CURVE
PRF	PAVEMENT REINFORCING FABRIC
PRVC	POINT OF REVERSE VERTICAL CURVE
PS&E	PLANS, SPECIFICATIONS AND ESTIMATES
PS, P/S	PRESTRESSED
PSP	PERFORATED STEEL PIPE
PT	POINT OF TANGENCY
PVC	POLYVINYL CHLORIDE
Pvmt	PAVEMENT

Q

Qty	QUANTITY

R

R	RADIUS
R & D	REMOVE AND DISPOSE
R & S	REMOVE AND SALVAGE
R/C	RATE OF CHANGE
RCA	REINFORCED CONCRETE ARCH
RCB	REINFORCED CONCRETE BOX
RCP	REINFORCED CONCRETE PIPE
RCPA	REINFORCED CONCRETE PIPE ARCH
Rd	ROAD
Reinf	REINFORCED,
	REINFORCEMENT,
	REINFORCING
Rel	RELOCATE
Repl	REPLACEMENT
Ret	RETAINING
Rev	REVISED, REVISION
Rdwy	ROADWAY
RHMA	RUBBERIZED HOT MIX ASPHALT
Riv	RIVER
RM	ROAD-MIXED
RP	RADIUS POINT,
	REFERENCE POINT
RR	RAILROAD
RSP	ROCK SLOPE PROTECTION,
	REVISED STANDARD PLAN
Rt	RIGHT
Rte	ROUTE
RW	REDWOOD,
	RETAINING WALL
R/W	RIGHT OF WAY
Rwy	RAILWAY

S

S	SOUTH,
	SUPPLEMENT
SAE	STRUCTURE APPROACH EMBANKMENT
Salv	SALVAGE
SAPP	STRUCTURAL ALUMINUM PLATE PIPE
SB	SOUTHBOUND
SC	SAND CUSHION
SCSP	SLOTTED CORRUGATED STEEL PIPE
SD	STORM DRAIN
Sec	SECOND,
	SECTION
Sep	SEPARATION
SG	SUBGRADE
Shld	SHOULDER
Sht	SHEET
Sim	SIMILAR
℄	STATION LINE
SM	SELECTED MATERIAL
Spec	SPECIAL,
	SPECIFICATIONS
SPP	SLOTTED PLASTIC PIPE
SS	SLOPE STAKE
SSBM	STRAP AND SADDLE BRACKET METHOD
SSD	STRUCTURAL SECTION DRAIN
SSPA	STRUCTURAL STEEL PLATE ARCH
SSPP	STRUCTURAL STEEL PLATE PIPE
SSPPA	STRUCTURAL STEEL PLATE PIPE ARCH
SSRP	STEEL SPIRAL RIB PIPE
St	STREET
Sta	STATION
STBB	SINGLE THRIE BEAM BARRIER
Std	STANDARD
Str	STRUCTURE
Surf	SURFACING
SW	SIDEWALK,
	SOUND WALL
Swr	SEWER
Sym	SYMMETRICAL
S4S	SURFACE 4 SIDES

T

T	SEMI-TANGENT
Tan	TANGENT
TBB	THRIE BEAM BARRIER
Tbr	TIMBER
TC	TOP OF CURB
TCB	TRAFFIC CONTROL BOX
TCE	TEMPORARY CONSTRUCTION EASEMENT
Tel	TELEPHONE
Temp	TEMPORARY
TG	TOP OF GRADE
Tot	TOTAL
TP	TELEPHONE POLE
TPB	TREATED PERMEABLE BASE
TPM	TREATED PERMEABLE MATERIAL
Trans	TRANSITION

T continued

TS	TRANSVERSE,
	TRAFFIC SIGNAL,
	TUBULAR STEEL
Typ	TYPICAL

U

UC	UNDERCROSSING
UD	UNDERDRAIN
UG	UNDERGROUND
UON	UNLESS OTHERWISE NOTED
UP	UNDERPASS

V

V	VALVE,
	DESIGN SPEED
Var	VARIABLE,
	VARIES
VC	VERTICAL CURVE
VCP	VITRIFIED CLAY PIPE
Vert	VERTICAL
Via	VIADUCT
Vol	VOLUME

W

W	WEST,
	WIDTH
WB	WESTBOUND
WH	WEEP HOLE
WM	WIRE MESH
WS	WATER SURFACE
WSP	WELDED STEEL PIPE
Wt	WEIGHT
WV	WATER VALVE
WW	WINGWALL
WWLOL	WINGWALL LAYOUT LINE

X

X Sec	CROSS SECTION
Xing	CROSSING

Y

Yr	YEAR
Yrs	YEARS

Dist	COUNTY	ROUTE	POST MILES TOTAL PROJECT	SHEET No.	TOTAL SHEETS
04	Ala	580	R4.0	26	58

Grace M. Tsushima
REGISTERED CIVIL ENGINEER

July 19, 2013
PLANS APPROVAL DATE

REGISTERED PROFESSIONAL ENGINEER
Grace M. Tsushima
No. C49814
Exp. 9-30-14
CIVIL
STATE OF CALIFORNIA

THE STATE OF CALIFORNIA OR ITS OFFICERS OR AGENTS SHALL NOT BE RESPONSIBLE FOR THE ACCURACY OR COMPLETENESS OF SCANNED COPIES OF THIS PLAN SHEET.

TO ACCOMPANY PLANS DATED 6-1-15

UNIT OF MEASUREMENT SYMBOLS:

Some of the symbols used in the project plan quantity tables and in the Bid Item List are:

TABLE A

SYMBOL USED	DEFINITIONS
ACRE	ACRE
CF	CUBIC FOOT
CY	CUBIC YARD
EA	EACH
GAL	GALLON
LB	POUND
LF	LINEAR FOOT
SQFT	SQUARE FOOT
SQYD	SQUARE YARD
STA	100 FEET
TAB	TABLET
TON	2,000 POUNDS

Some of the symbols used in the plans other than in the project plan quantity tables are:

TABLE B

SYMBOL USED	DEFINITIONS
ksi	KIPS PER SQUARE INCH
ksf	KIPS PER SQUARE FOOT
psi	POUNDS PER SQUARE INCH
psf	POUNDS PER SQUARE FOOT
lb/ft^3, pcf	POUNDS PER CUBIC FOOT
tsf	TONS PER SQUARE FOOT
mph, MPH *	MILES PER HOUR
ø	NOMINAL DIAMETER
oz	OUNCE
lb	POUND
kip	1,000 POUNDS
cal	CALORIE
ft	FOOT OR FEET
gal	GALLON

* For use on a sign panel only

STATE OF CALIFORNIA
DEPARTMENT OF TRANSPORTATION

ABBREVIATIONS (SHEET 2 OF 2)

NO SCALE

RSP A10B DATED JULY 19, 2013 SUPERSEDES STANDARD PLAN A10B DATED MAY 20, 2011 - PAGE 2 OF THE STANDARD PLANS BOOK DATED 2010.

REVISED STANDARD PLAN RSP A10B

2010 REVISED STANDARD PLAN RSP A10B

6-7-13

Dist	COUNTY	ROUTE	POST MILES TOTAL PROJECT	SHEET No.	TOTAL SHEETS
04	Ala	580	R4.0	27	58

Randell D. Hiatt
REGISTERED CIVIL ENGINEER

July 19, 2013
PLANS APPROVAL DATE

REGISTERED PROFESSIONAL ENGINEER
Randell D. Hiatt
No. C50200
Exp. 6-30-15
CIVIL
STATE OF CALIFORNIA

THE STATE OF CALIFORNIA OR ITS OFFICERS OR AGENTS SHALL NOT BE RESPONSIBLE FOR THE ACCURACY OR COMPLETENESS OF SCANNED COPIES OF THIS PLAN SHEET.

TO ACCOMPANY PLANS DATED 6-1-15

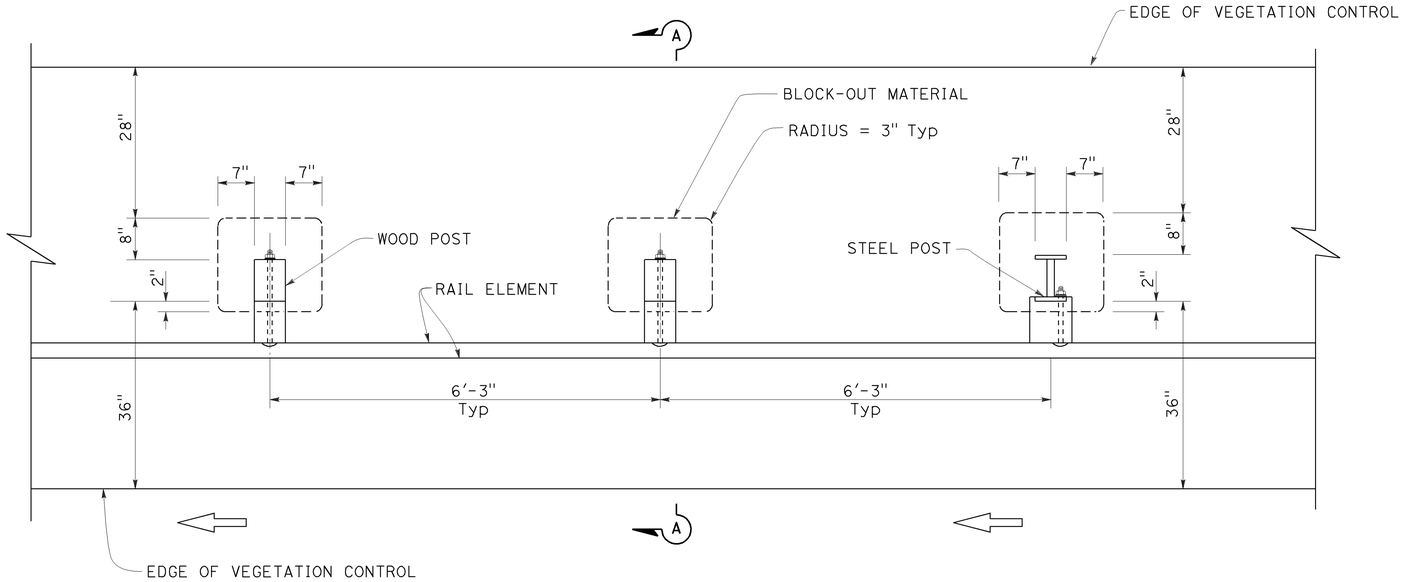

PLAN

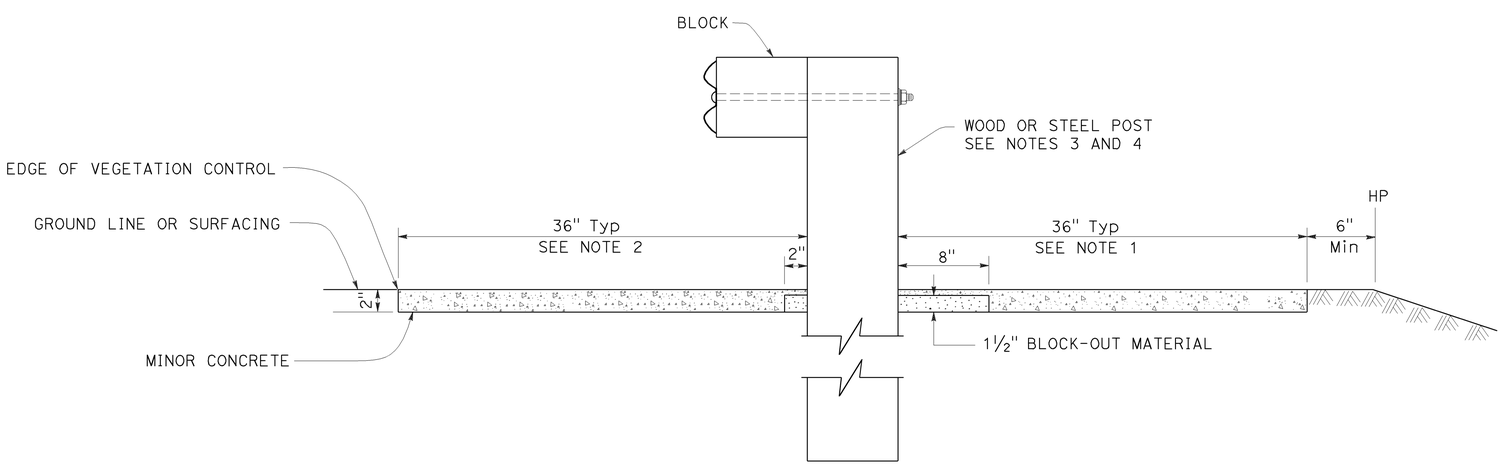

SECTION A-A

NOTES:

1. Where the distance between back of post and hinge point is less than 42", construct vegetation control to 6" from hinge point while maintaining the 8" block-out at back of post. If the 8" block-out at back of post can not be maintained, construct vegetation control flush with the back edge of post.
2. Where dike is constructed under railing, construct vegetation control to back edge of dike. Where paved shoulder is constructed within 36" in front of the post, construct vegetation control to the edge of paved shoulder.
3. For wood post sizes, see Revised Standard Plan RSP A77N1.
4. For steel post sizes, see Revised Standard Plan RSP A77N2.
5. For details not shown, see Revised Standard Plans RSP A77L1 and RSP A77L2.

STATE OF CALIFORNIA
DEPARTMENT OF TRANSPORTATION

MIDWEST GUARDRAIL SYSTEM TYPICAL VEGETATION CONTROL STANDARD RAILING SECTION

NO SCALE

RSP A77N5 DATED JULY 19, 2013 SUPPLEMENTS THE STANDARD PLANS BOOK DATED 2010.

REVISED STANDARD PLAN RSP A77N5

2010 REVISED STANDARD PLAN RSP A77N5

7-3-13

Dist	COUNTY	ROUTE	POST MILES TOTAL PROJECT	SHEET No.	TOTAL SHEETS
04	Ala	580	R4.0	28	58

Randell D. Hiatt
REGISTERED CIVIL ENGINEER

July 19, 2013
PLANS APPROVAL DATE

REGISTERED PROFESSIONAL ENGINEER
Randell D. Hiatt
No. C50200
Exp. 6-30-15
CIVIL
STATE OF CALIFORNIA

THE STATE OF CALIFORNIA OR ITS OFFICERS OR AGENTS SHALL NOT BE RESPONSIBLE FOR THE ACCURACY OR COMPLETENESS OF SCANNED COPIES OF THIS PLAN SHEET.

TO ACCOMPANY PLANS DATED 6-1-15

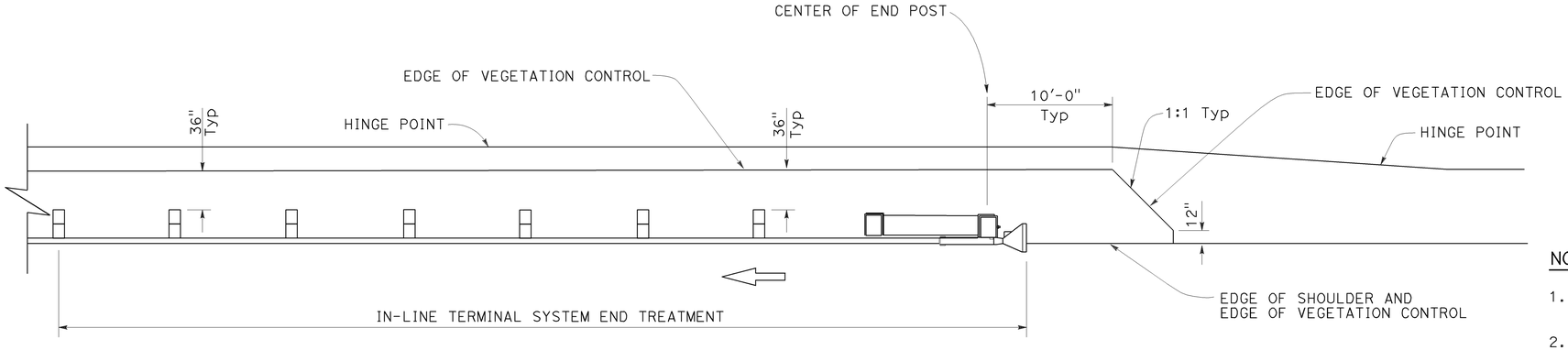

PLAN

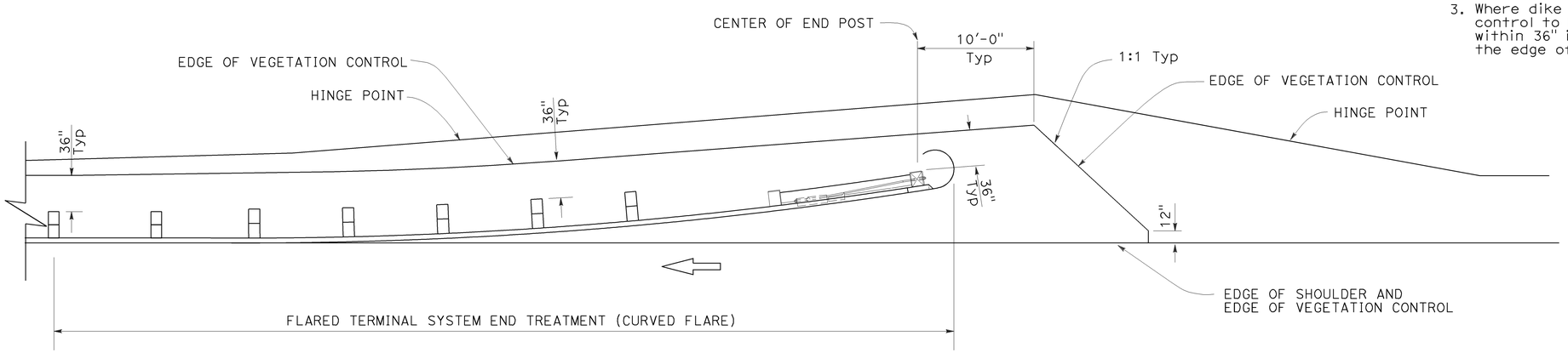

PLAN

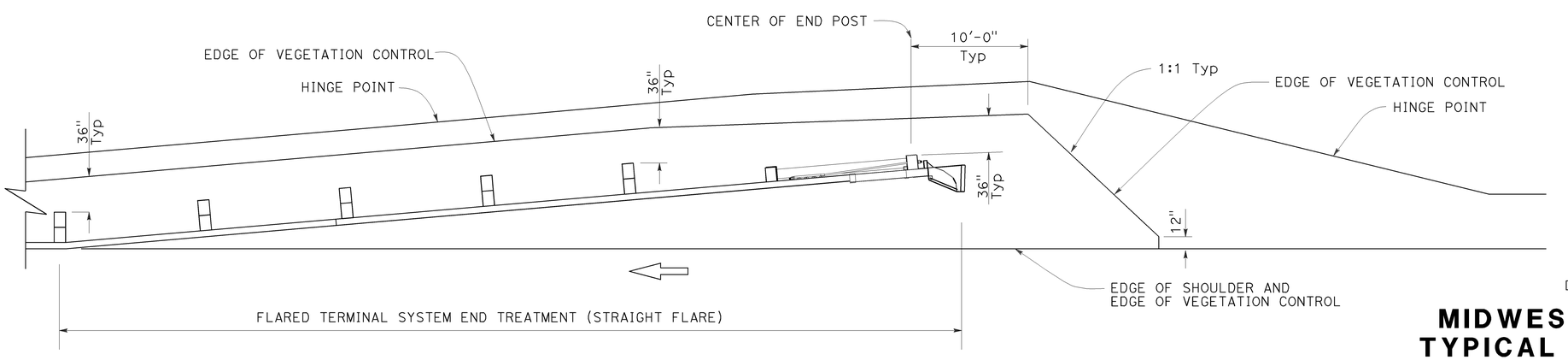

PLAN

NOTES:

1. See Revised Standard Plan RSP A77N5 for additional vegetation control details.
2. Where the distance between back of post and hinge point is less than 42", construct vegetation control to 6" from hinge point while maintaining the 8" block-out at back of post. If the 8" block-out at back of post can not be maintained, construct vegetation control flush with the back edge of post.
3. Where dike is constructed under railing, construct vegetation control to back edge of dike. Where paved shoulder is constructed within 36" in front of the post, construct vegetation control to the edge of paved shoulder.

STATE OF CALIFORNIA
DEPARTMENT OF TRANSPORTATION

MIDWEST GUARDRAIL SYSTEM TYPICAL VEGETATION CONTROL FOR TERMINAL SYSTEM END TREATMENTS

NO SCALE

RSP A77N6 DATED JULY 19, 2013 SUPPLEMENTS THE STANDARD PLANS BOOK DATED 2010.

REVISED STANDARD PLAN RSP A77N6

2010 REVISED STANDARD PLAN RSP A77N6

Dist	COUNTY	ROUTE	POST MILES TOTAL PROJECT	SHEET No.	TOTAL SHEETS
04	Ala	580	R4.0	29	58

Randell D. Hiatt
REGISTERED CIVIL ENGINEER

July 19, 2013
PLANS APPROVAL DATE

REGISTERED PROFESSIONAL ENGINEER
Randell D. Hiatt
No. C50200
Exp. 6-30-15
CIVIL
STATE OF CALIFORNIA

THE STATE OF CALIFORNIA OR ITS OFFICERS OR AGENTS SHALL NOT BE RESPONSIBLE FOR THE ACCURACY OR COMPLETENESS OF SCANNED COPIES OF THIS PLAN SHEET.

TO ACCOMPANY PLANS DATED 6-1-15

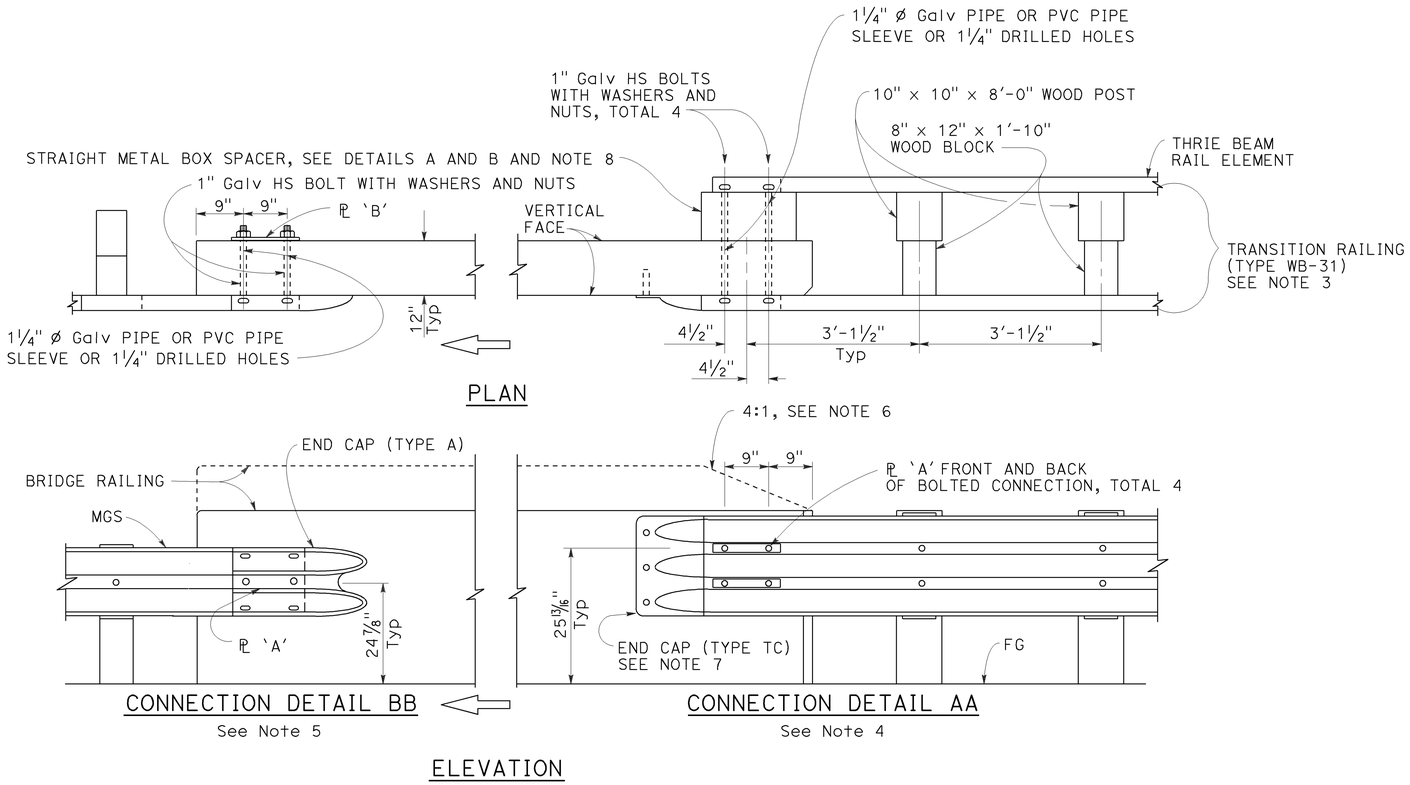

MIDWEST GUARDRAIL SYSTEM CONNECTION TO BRIDGE RAILING WITHOUT SIDEWALK

NOTES:

1. See Revised Standard Plan RSP A77U2 for additional connection details to bridges without sidewalks.
2. Additional details of posts, blocks and hardware are shown on Revised Standard Plans RSP A77M1, RSP A77N1 and RSP A77N2.
3. For additional details of Transition Railing (Type WB-31), see Revised Standard Plan RSP A77U4. Transition Railing (Type WB-31) transitions the 12 gauge MGS railing section to a heavier gage nested thrie beam railing section which is connected to the concrete bridge railing.
4. For typical use of Connection Detail AA, see Layout Types 12A and 12B on Revised Standard Plan RSP A77Q1, Layout Types 12C and 12D on Revised Standard Plan RSP A77Q2, and Layout Type 12E on Revised Standard Plan RSP A77Q3.
5. For typical use of Connection Detail BB, see Layout Type 12D (structure departure railing connection) on Revised Standard Plan RSP A77Q2 and Layout Type 12DD on Revised Standard Plan RSP A77Q5.
6. Where the height of the bridge railing exceeds the height of the thrie beam railing by more than 1" at Connection Detail AA, taper the top of the end of the bridge railing at 4:1 to match the top elevation of the thrie beam rail.
7. For details of End Cap (Type TC), see Revised Standard Plan RSP A77U4.
8. See Revised Standard Plan RSP A77U4 for additional details regarding depth dimension for straight metal box spacer.

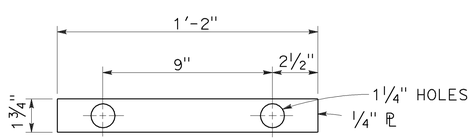

PLATE 'A'

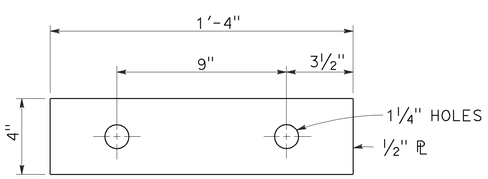

PLATE 'B'
(For backside of connection BB)

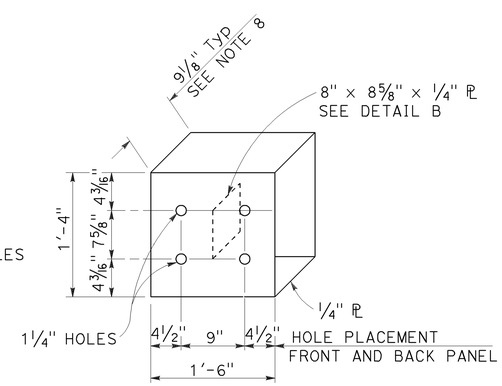

DETAIL A

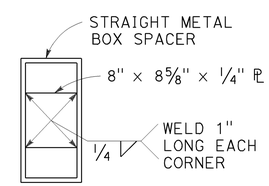

DETAIL B

STRAIGHT METAL BOX SPACER

STATE OF CALIFORNIA
DEPARTMENT OF TRANSPORTATION

MIDWEST GUARDRAIL SYSTEM CONNECTIONS TO BRIDGE RAILINGS WITHOUT SIDEWALKS DETAILS No. 1

NO SCALE

RSP A77U1 DATED JULY 19, 2013 SUPPLEMENTS THE STANDARD PLANS BOOK DATED 2010.

REVISED STANDARD PLAN RSP A77U1

2010 REVISED STANDARD PLAN RSP A77U1

7-8-13

Dist	COUNTY	ROUTE	POST MILES TOTAL PROJECT	SHEET No.	TOTAL SHEETS
04	Ala	580	R4.0	30	58

Randell D. Hiatt
REGISTERED CIVIL ENGINEER

January 23, 2015
PLANS APPROVAL DATE

REGISTERED PROFESSIONAL ENGINEER
Randell D. Hiatt
No. C50200
Exp. 6-30-15
CIVIL
STATE OF CALIFORNIA

THE STATE OF CALIFORNIA OR ITS OFFICERS OR AGENTS SHALL NOT BE RESPONSIBLE FOR THE ACCURACY OR COMPLETENESS OF SCANNED COPIES OF THIS PLAN SHEET.

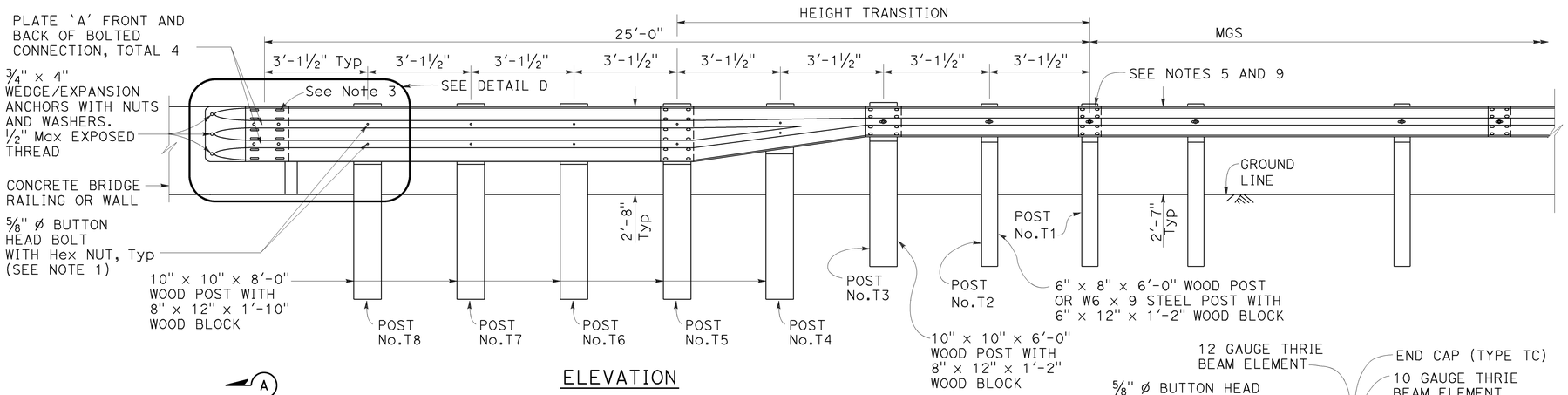

ELEVATION

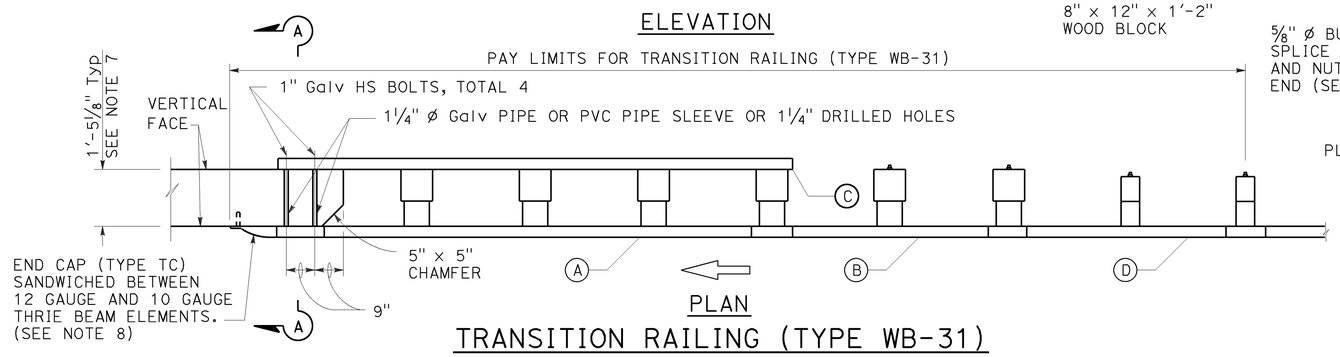

PLAN

TRANSITION RAILING (TYPE WB-31)

(No Blockout Attachment)

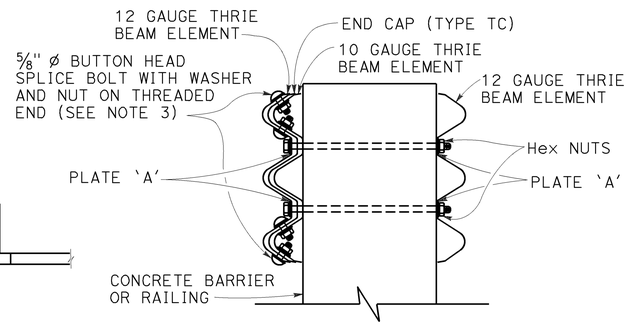

SECTION A-A

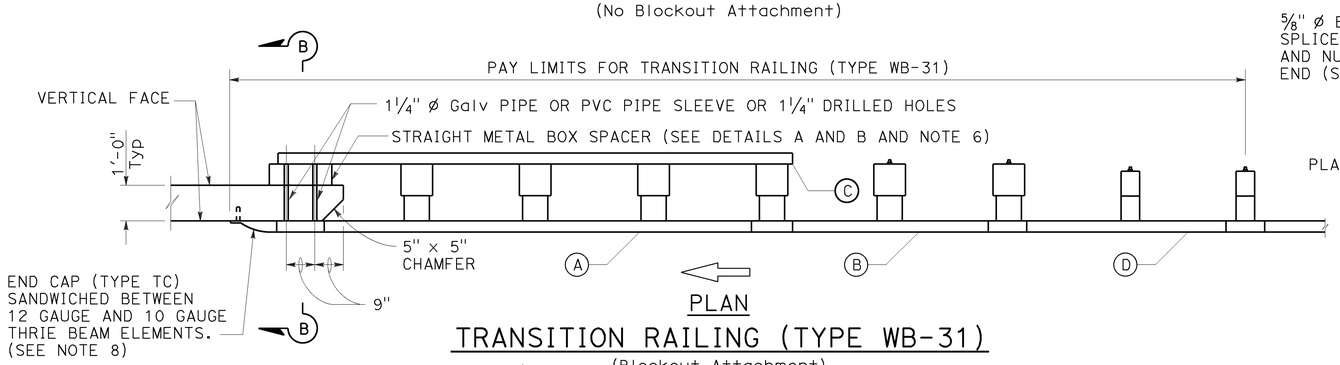

PLAN

TRANSITION RAILING (TYPE WB-31)

(Blockout Attachment)

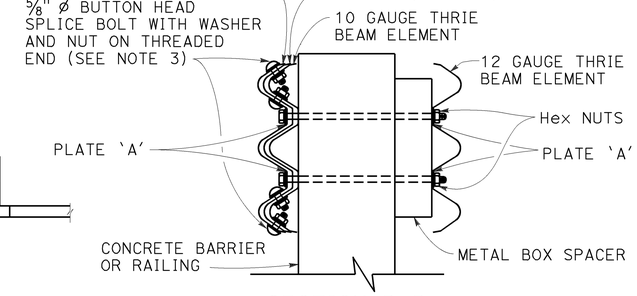

SECTION B-B

LEGEND:

- (A) NESTED THRIE BEAM ELEMENTS (ONE 12 GAUGE ELEMENT NESTED OVER ONE 10 GAUGE ELEMENT).
- (B) ONE ASYMMETRICAL 10 GAUGE "W" BEAM TO THRIE BEAM ELEMENT.
- (C) ONE 12 GAUGE THRIE BEAM ELEMENT.
- (D) ONE 10 GAUGE "W" BEAM RAIL ELEMENT (7'-3 1/2"LENGTH)

10 GAUGE = 0.138" THICK
12 GAUGE = 0.108" THICK

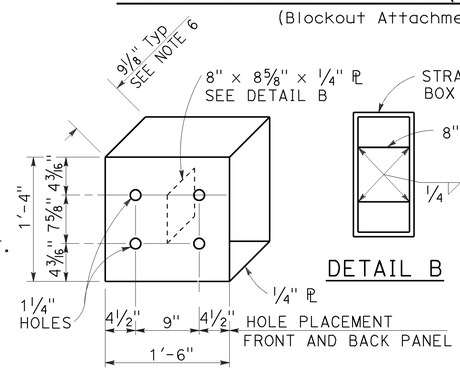

DETAIL A

STRAIGHT METAL BOX SPACER

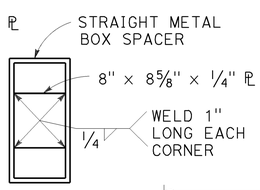

DETAIL B

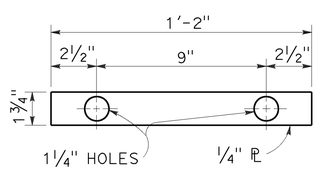

DETAIL C

PLATE 'A'

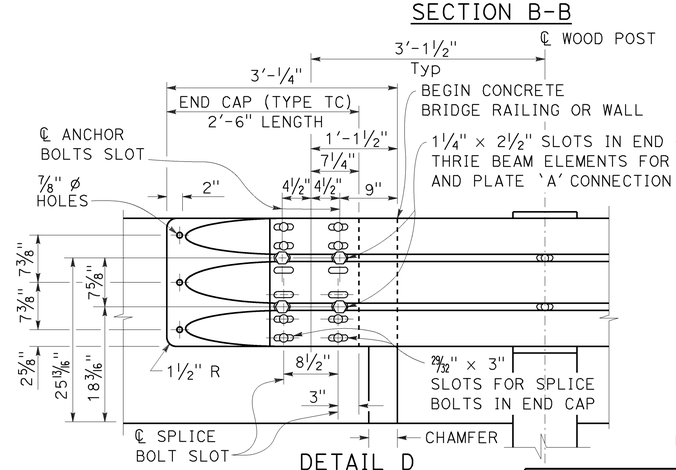

DETAIL D

NOTES:

TO ACCOMPANY PLANS DATED 6-1-15

1. Use 5/8" ø Button head bolts and hex nuts for connections to posts. No washer on rail face for bolted connections to post.
2. The nested rail elements, end cap, and 'W' beam to thrie beam element may be spliced together prior to bolting the elements to the wood post and concrete barrier or railing.
3. Exterior splice bolt holes for rail element splices at Post No. T5 and the connection to the concrete barrier or railing shall be the standard 29/32" x 1 1/8" slot size. Interior splice bolt holes at these locations may be increased up to 1 1/4" ø. Only the top 4 and the bottom 4 splice bolts with washers and nuts are required for rail splices at Post No. T5 and the connection to the concrete barrier or railing.
4. The top elevation of Posts No. T2 through No. T7 shall not project more than 1" above the top elevation of the rail element.
5. Typically, the railing connected to Transition Railing (Type WB-31) will be either standard railing section of MGS with height transition ratio of 150:1 or a Caltrans approved 31" end treatment attached to Post No. T1.
6. The depth of the metal box spacer varies from the 9 1/8" to 1 1/2" and is dependent on the width of the concrete railing or wall. The combined dimension for the depth of the metal box spacer plus the width of railing or wall is typically 21 1/8". Where the space between the backside of the concrete railing or wall and the rear thrie beam element is less than 1 1/2", metal plates similar to Plate 'A' are to be used as spacers.
7. Where the width of the concrete railing or wall is greater than 17 1/8", wood blocks are to be used to fill the space created between the backside of Posts No. T5 through No. T8 and the rear thrie beam element. These wood blocks shall be 8" in width and 1'-2" in length. The dimension between the front thrie beam element and the rear thrie beam element is to match the width of the concrete railing or wall.
8. End cap may be installed over 12 gauge and 10 gauge thrie beam elements where transition railing is installed on the departure end of bridge railing.
9. Conform standard railing section height to 31" at Post No. T1 using height transition ratio of 150:1.

STATE OF CALIFORNIA
DEPARTMENT OF TRANSPORTATION

MIDWEST GUARDRAIL SYSTEM TRANSITION RAILING (TYPE WB-31)

NO SCALE

RSP A77U4 DATED JANUARY 23, 2015 SUPERSEDES RSP A77U4 DATED NOVEMBER 15, 2013 AND RSP A77U4 DATED JULY 19, 2013 THAT SUPPLEMENTS THE STANDARD PLANS BOOK DATED 2010.

REVISED STANDARD PLAN RSP A77U4

2010 REVISED STANDARD PLAN RSP A77U4

1-8-15

Dist	COUNTY	ROUTE	POST MILES TOTAL PROJECT	SHEET No.	TOTAL SHEETS
04	Ala	580	R4.0	31	58

Randell D. Hiatt
REGISTERED CIVIL ENGINEER

July 19, 2013
PLANS APPROVAL DATE

REGISTERED PROFESSIONAL ENGINEER
Randell D. Hiatt
No. C50200
Exp. 6-30-15
CIVIL
STATE OF CALIFORNIA

THE STATE OF CALIFORNIA OR ITS OFFICERS OR AGENTS SHALL NOT BE RESPONSIBLE FOR THE ACCURACY OR COMPLETENESS OF SCANNED COPIES OF THIS PLAN SHEET.

TO ACCOMPANY PLANS DATED 6-1-15

NOTES:

1. Refer to Revised Standard Plans RSP A77L1 and RSP A77L2 for component details for MGS not shown on this plan.
2. All posts for any standard barrier run shall be of the same type: Wood or Steel.
3. Install posts in soil.

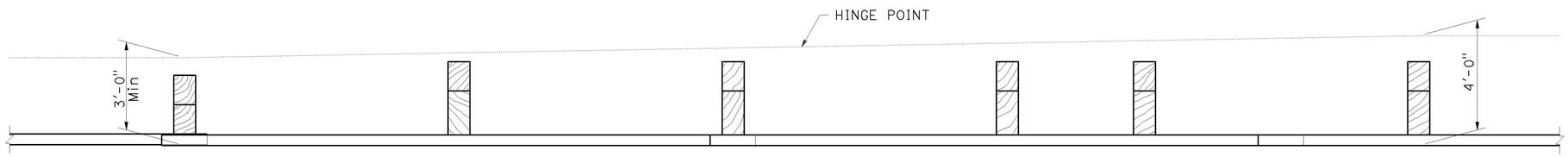

PLAN

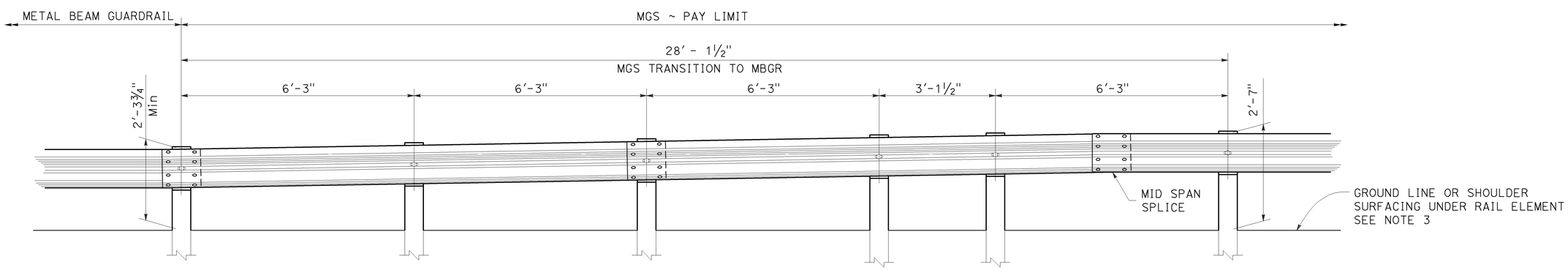

ELEVATION

STATE OF CALIFORNIA
DEPARTMENT OF TRANSPORTATION

MIDWEST GUARDRAIL SYSTEM TRANSITION TO METAL BEAM GUARDRAIL

NO SCALE

RSP A77U5 DATED JULY 19, 2013 SUPPLEMENTS THE STANDARD PLANS BOOK DATED 2010.

REVISED STANDARD PLAN RSP A77U5

2010 REVISED STANDARD PLAN RSP A77U5

Dist	COUNTY	ROUTE	POST MILES TOTAL PROJECT	SHEET No.	TOTAL SHEETS
04	Ala	580	R4.0	32	58

REGISTERED CIVIL ENGINEER

July 19, 2013
PLANS APPROVAL DATE

REGISTERED PROFESSIONAL ENGINEER — William K. Farnbach — No. C49042 — Exp. 9-30-14 — CIVIL — STATE OF CALIFORNIA

THE STATE OF CALIFORNIA OR ITS OFFICERS OR AGENTS SHALL NOT BE RESPONSIBLE FOR THE ACCURACY OR COMPLETENESS OF SCANNED COPIES OF THIS PLAN SHEET.

TO ACCOMPANY PLANS DATED 6-1-15

2010 REVISED STANDARD PLAN RSP P3B

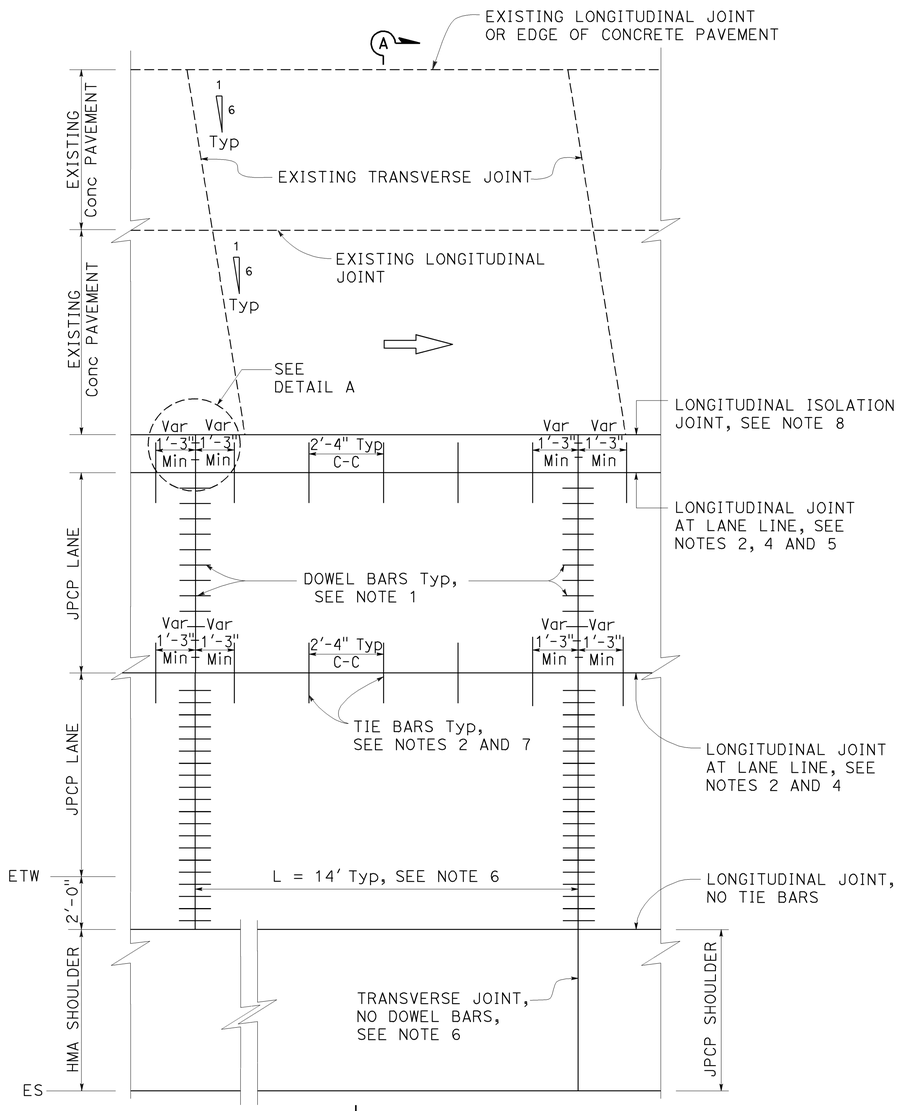

A PLAN
ISOLATED
See Note 3

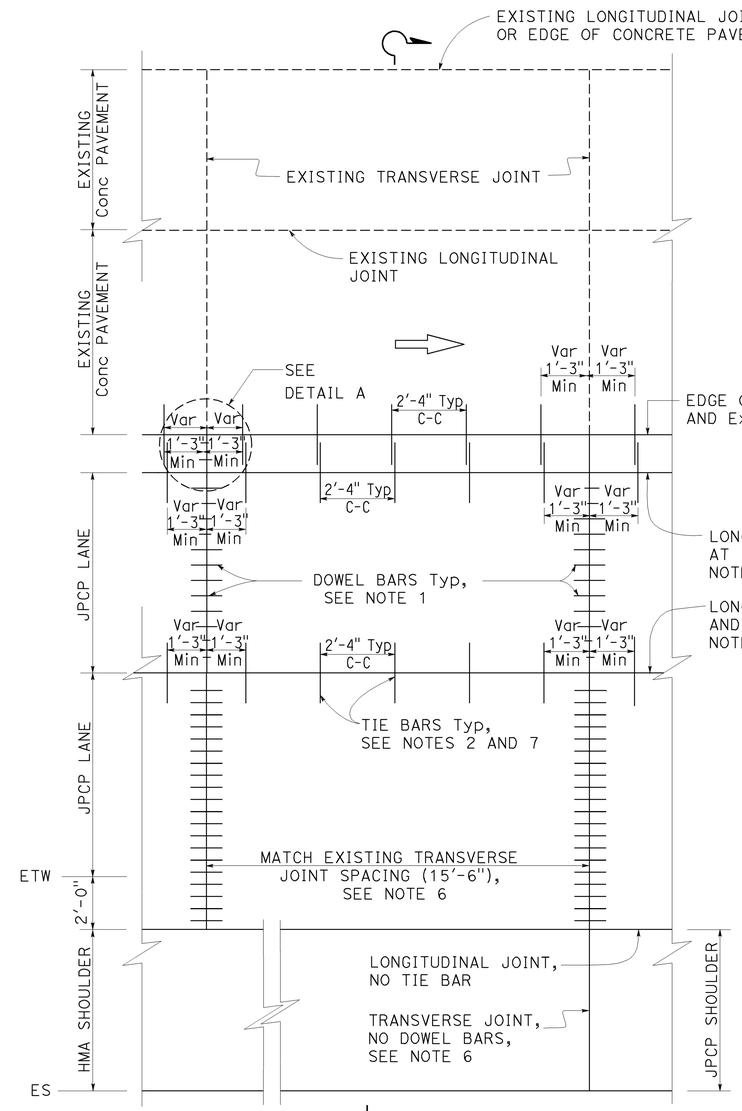

B PLAN
TIED
See Note 3

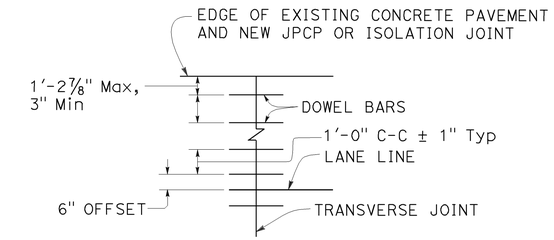

DETAIL A

NOTES:

1. For transverse joint and dowel bar details not shown, see Revised Standard Plan RSP P10.
2. For longitudinal joint and tie bar details not shown, see Revised Standard Plan RSP P15.
3. For joint layout at intersections, see Project Plans.
4. For additional longitudinal joint details, see Revised Standard Plan RSP P18.
5. Omit longitudinal joint when edge of new concrete pavement is 3'-3" or less from JPCP lane line.
6. Transverse joint spacing may be adjusted to no less than 10' and no more than 15'-6" to conform to bridges, change in pavement type and existing pavement.
7. For dowel bars at longitudinal joint. see Revised Standard Plan RSP P18.
8. For isolation joints, see Detail A on Revised Standard Plan RSP P18.

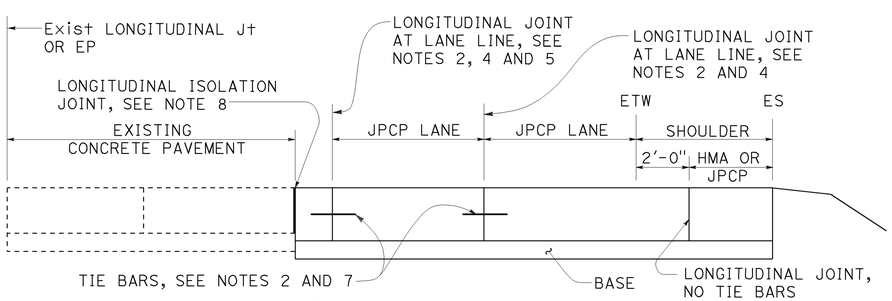

SECTION A-A

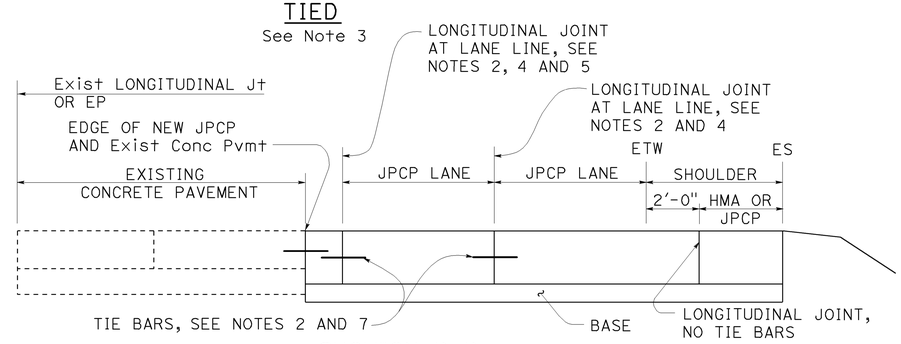

SECTION B-B

STATE OF CALIFORNIA
DEPARTMENT OF TRANSPORTATION

JOINTED PLAIN CONCRETE PAVEMENT (WIDENED LANE) LANE AND SHOULDER ADDITION OR REPLACEMENT

NO SCALE

RSP P3B DATED JULY 19, 2013 SUPPLEMENTS THE STANDARD PLANS BOOK DATED 2010.

REVISED STANDARD PLAN RSP P3B

5-31-13

Dist	COUNTY	ROUTE	POST MILES TOTAL PROJECT	SHEET No.	TOTAL SHEETS
04	Ala	580	R4.0	33	58

William K. Farnbach
REGISTERED CIVIL ENGINEER

July 19, 2013
PLANS APPROVAL DATE

REGISTERED PROFESSIONAL ENGINEER William K. Farnbach No. C49042 Exp. 9-30-14 CIVIL STATE OF CALIFORNIA

THE STATE OF CALIFORNIA OR ITS OFFICERS OR AGENTS SHALL NOT BE RESPONSIBLE FOR THE ACCURACY OR COMPLETENESS OF SCANNED COPIES OF THIS PLAN SHEET.

TO ACCOMPANY PLANS DATED 6-1-15

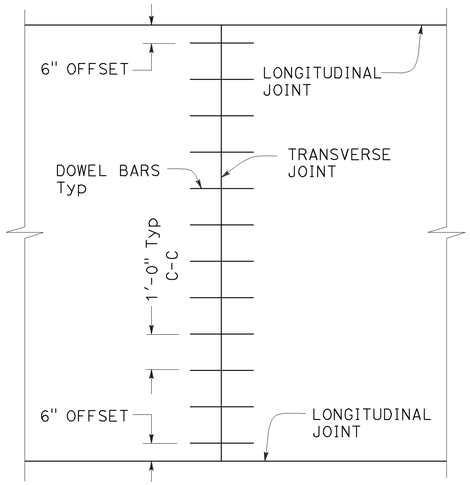

TRANSVERSE JOINT DOWEL BAR LAYOUT

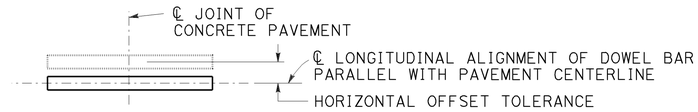

PLAN

HORIZONTAL OFFSET TOLERANCE

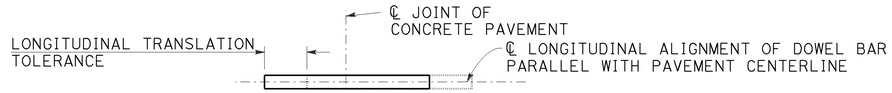

PLAN

LONGITUDINAL TRANSLATION TOLERANCE

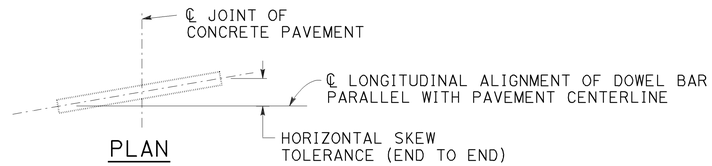

PLAN

HORIZONTAL SKEW TOLERANCE

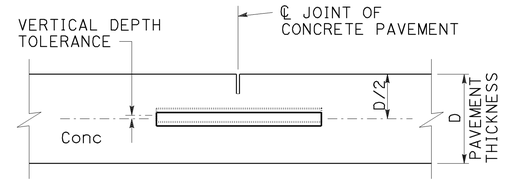

ELEVATION

VERTICAL DEPTH TOLERANCE

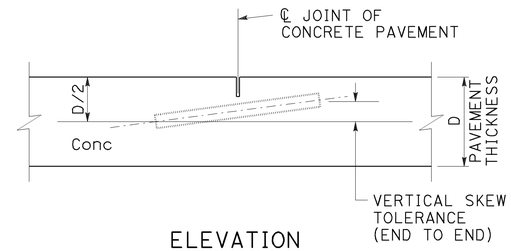

ELEVATION

VERTICAL SKEW TOLERANCE

NOTES:

1. See Revised Standard Plan RSP P1 for typical dowel bar placement and locations.
2. Where fresh concrete pavement is placed against new concrete or existing concrete pavement, rounding the corner of the existing concrete pavement is not required.
3. May also use ¾" Dia dowel bars 2'-4" ± ¼" in length. Center the length of dowel bars at the centerline of longitudinal joint.

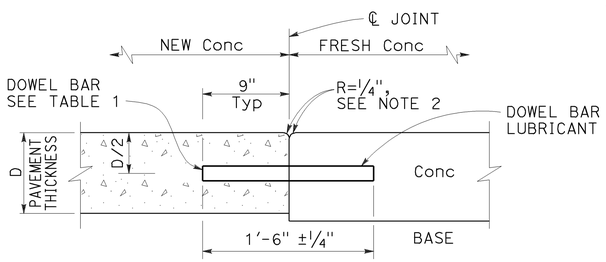

TRANSVERSE CONSTRUCTION JOINT DETAIL

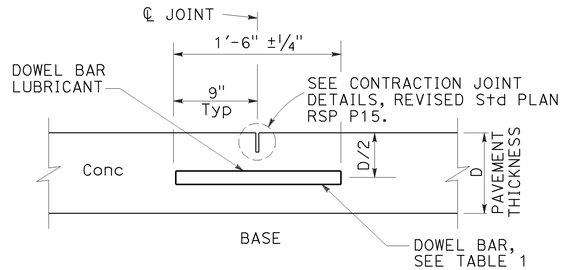

TRANSVERSE CONTRACTION JOINT

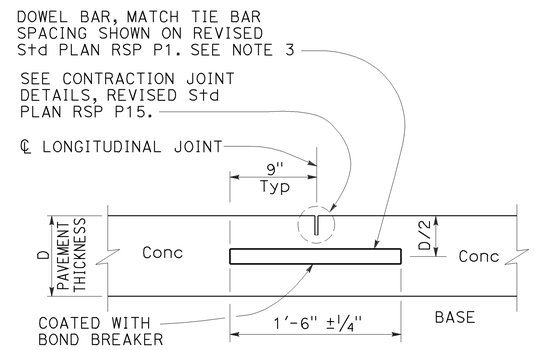

LONGITUDINAL CONTRACTION JOINT WITH DOWEL BARS

See Revised Std Plan RSP P18

TABLE 1

DOWEL BAR DIAMETER TABLE			
PAVEMENT THICKNESS	0.65'	> 0.65' - 0.85'	> 0.85'
MINIMUM DOWEL * BAR DIAMETER	1"	1¼"	1½"

* The drilled hole diameter must be ⅛" to 3/16" larger than the bar diameter.

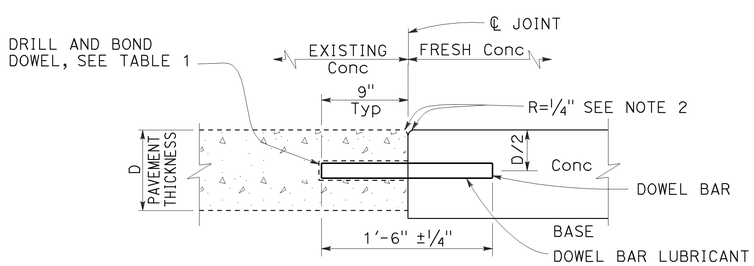

TRANSVERSE CONSTRUCTION JOINT FOR EXISTING CONCRETE PAVEMENT

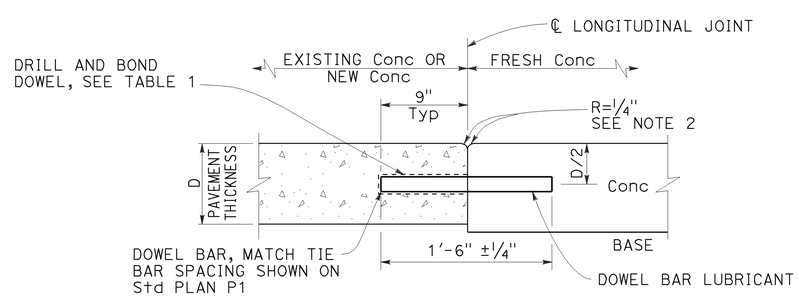

LONGITUDINAL CONSTRUCTION JOINT WITH DOWEL BARS

See Revised Std Plan RSP P18

STATE OF CALIFORNIA
DEPARTMENT OF TRANSPORTATION

CONCRETE PAVEMENT DOWEL BAR DETAILS

NO SCALE

RSP P10 DATED JULY 19, 2013 SUPERSEDES RSP P10 DATED APRIL 20, 2012 AND STANDARD PLAN P10 DATED MAY 20, 2011 - PAGE 131 OF THE STANDARD PLANS BOOK DATED 2010.

REVISED STANDARD PLAN RSP P10

2010 REVISED STANDARD PLAN RSP P10

5-31-13

Dist	COUNTY	ROUTE	POST MILES TOTAL PROJECT	SHEET No.	TOTAL SHEETS
04	Ala	580	R4.0	34	58

William K. Farnbach
REGISTERED CIVIL ENGINEER

July 19, 2013
PLANS APPROVAL DATE

REGISTERED PROFESSIONAL ENGINEER William K. Farnbach No. C49042 Exp. 9-30-14 CIVIL STATE OF CALIFORNIA

THE STATE OF CALIFORNIA OR ITS OFFICERS OR AGENTS SHALL NOT BE RESPONSIBLE FOR THE ACCURACY OR COMPLETENESS OF SCANNED COPIES OF THIS PLAN SHEET.

TO ACCOMPANY PLANS DATED 6-1-15

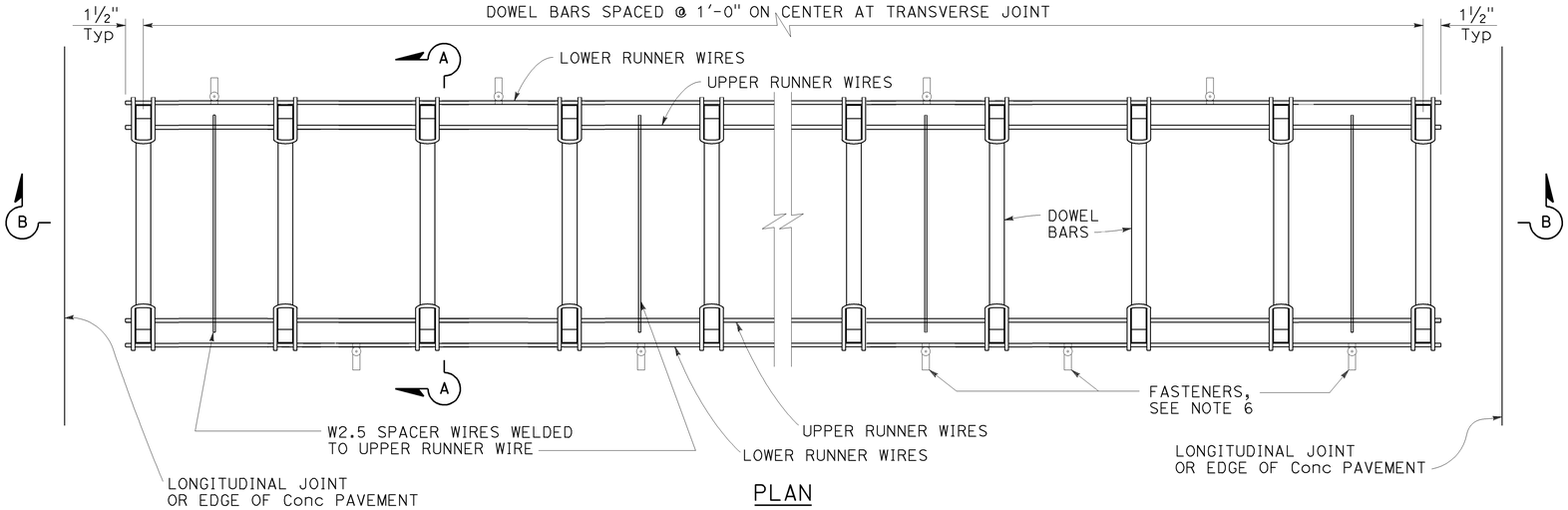

PLAN

DOWEL BAR BASKET (TRANSVERSE JOINT)

See Note 1

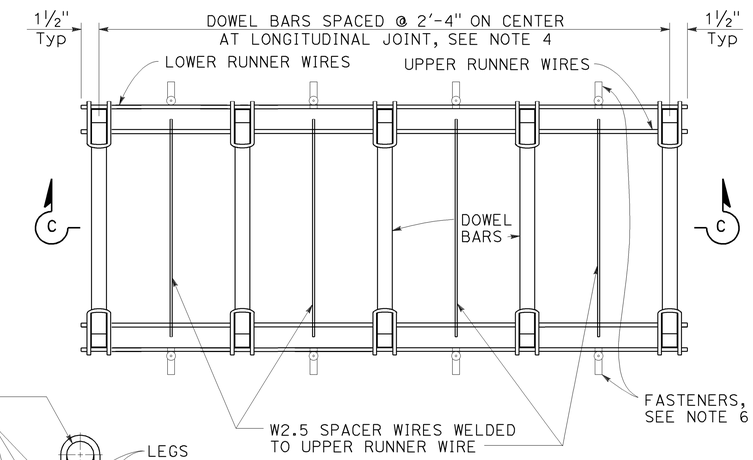

PLAN

DOWEL BAR BASKET (LONGITUDINAL JOINT)

See Note 1

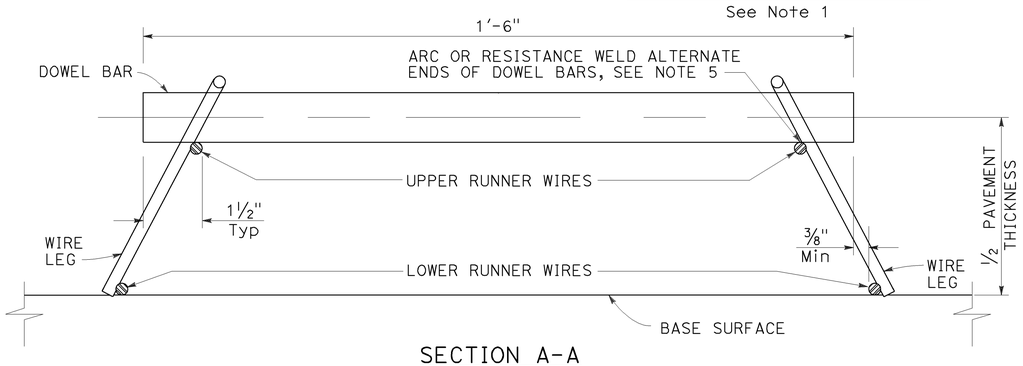

SECTION A-A

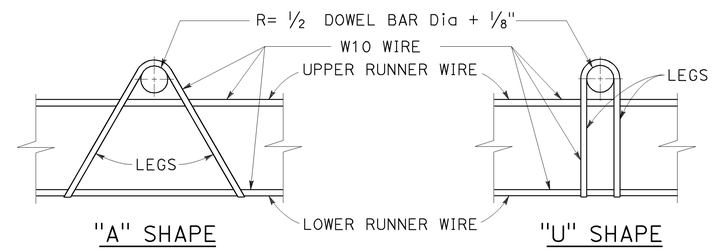

ASSEMBLY FRAME DETAILS

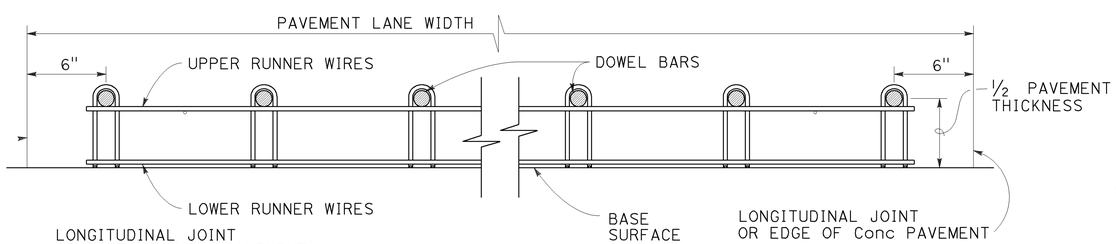

SECTION B-B

See Note 1

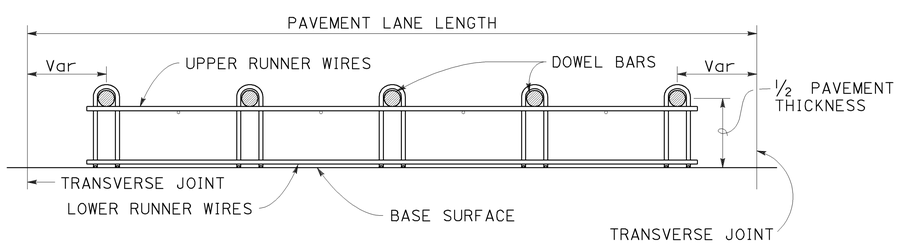

SECTION C-C

See Notes 1 and 4

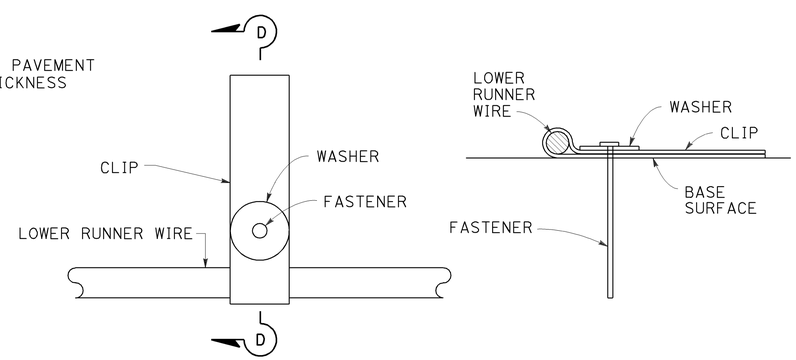

PLAN

SECTION D-D

FASTENER DETAIL

See Note 6

NOTES:

1. "U" frame shape assembly shown. Use either "U" frame shape or "A" frame shape.
2. Wire sizes shown are the minimum required.
3. All wire intersections must be resistance welded.
4. Use tie bar spacing for longitudinal dowel bar locations. See Revised Standard Plans RSP P1, RSP P2, RSP P3A, and RSP P3B for tie bar requirements.
5. Weld may be at the top or bottom of the dowel bar.
6. Use anchor pins where soil or granular base is used. See Revised Standard Plan RSP P17 for Anchor Pin Detail.

STATE OF CALIFORNIA
DEPARTMENT OF TRANSPORTATION

CONCRETE PAVEMENT DOWEL BAR BASKET DETAILS

NO SCALE

RSP P12 DATED JULY 19, 2013 SUPERSEDES STANDARD PLAN P12 DATED MAY 20, 2011 - PAGE 132 OF THE STANDARD PLANS BOOK DATED 2010.

REVISED STANDARD PLAN RSP P12

2010 REVISED STANDARD PLAN RSP P12

5-31-13

Dist	COUNTY	ROUTE	POST MILES TOTAL PROJECT	SHEET No.	TOTAL SHEETS
04	Ala	580	R4.0	35	58

William K. Farnbach
REGISTERED CIVIL ENGINEER

July 19, 2013
PLANS APPROVAL DATE

REGISTERED PROFESSIONAL ENGINEER
William K. Farnbach
No. C49042
Exp. 9-30-14
CIVIL
STATE OF CALIFORNIA

THE STATE OF CALIFORNIA OR ITS OFFICERS OR AGENTS SHALL NOT BE RESPONSIBLE FOR THE ACCURACY OR COMPLETENESS OF SCANNED COPIES OF THIS PLAN SHEET.

TO ACCOMPANY PLANS DATED 6-1-15

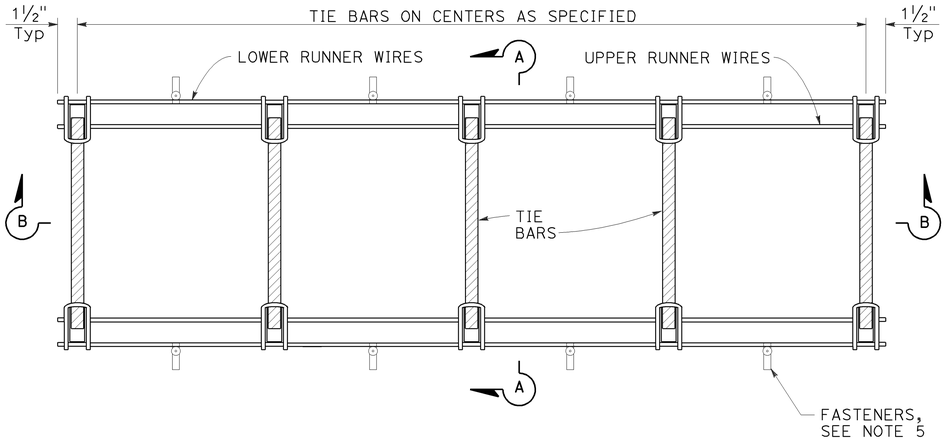

PLAN

TIE BAR BASKET

(Tie bars at longitudinal joint)
See Note 1

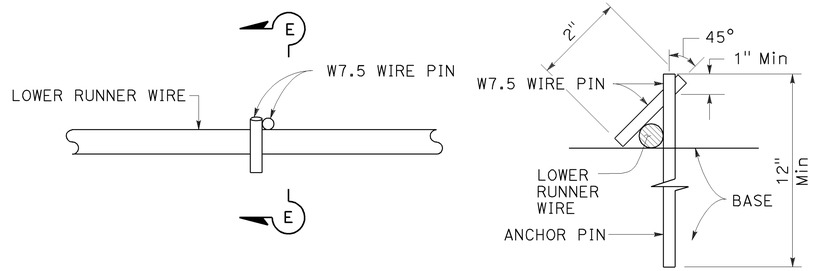

PLAN

SECTION E-E

ANCHOR PIN DETAIL

See Note 5

NOTES:

1. "U" frame shape assembly shown. Use either "U" frame shape or "A" frame shape.
2. Wire sizes shown are the minimum required.
3. All wire intersections must be resistance welded.
4. Weld may be at top or bottom of tie bars.
5. Use anchor pins where soil or granular base is used.

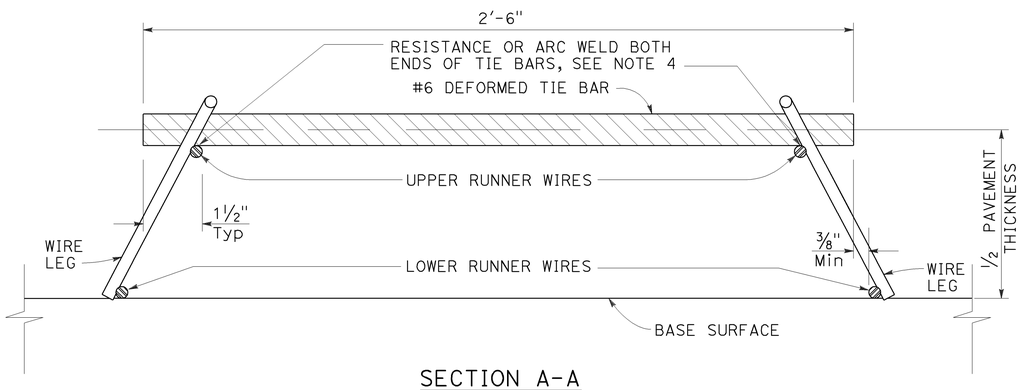

SECTION A-A

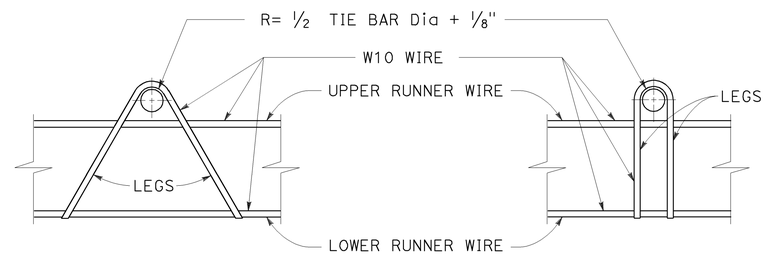

"A" SHAPE

"U" SHAPE

ASSEMBLY FRAME DETAILS

See Note 1

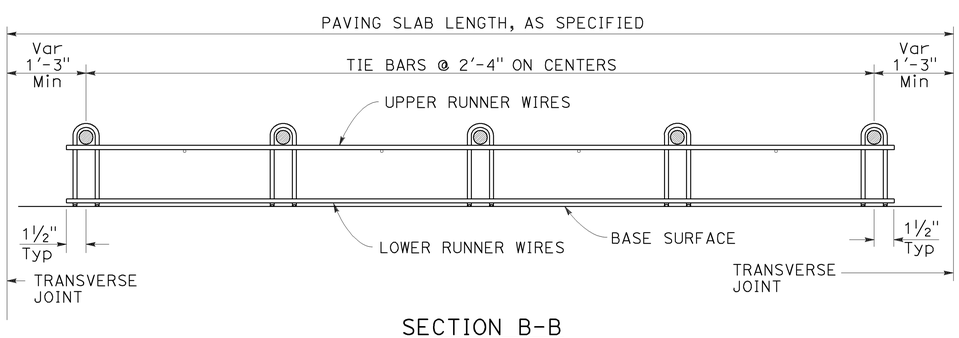

SECTION B-B

See Note 1

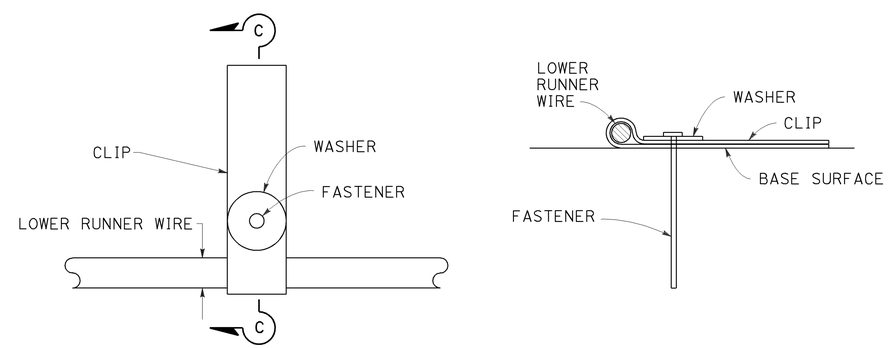

PLAN

SECTION C-C

FASTENER DETAIL

STATE OF CALIFORNIA
DEPARTMENT OF TRANSPORTATION

CONCRETE PAVEMENT TIE BAR BASKET DETAILS

NO SCALE

RSP P17 DATED JULY 19, 2013 SUPERSEDES STANDARD PLAN P17
DATED MAY 20, 2011 - PAGE 134 OF THE STANDARD PLANS BOOK DATED 2010.

REVISED STANDARD PLAN RSP P17

2010 REVISED STANDARD PLAN RSP P17

5-31-13

Dist	COUNTY	ROUTE	POST MILES TOTAL PROJECT	SHEET No.	TOTAL SHEETS
04	Ala	580	R4.0	36	58

William K. Farnbach
REGISTERED CIVIL ENGINEER

July 19, 2013
PLANS APPROVAL DATE

REGISTERED PROFESSIONAL ENGINEER William K. Farnbach No. C49042 Exp. 9-30-14 CIVIL STATE OF CALIFORNIA

THE STATE OF CALIFORNIA OR ITS OFFICERS OR AGENTS SHALL NOT BE RESPONSIBLE FOR THE ACCURACY OR COMPLETENESS OF SCANNED COPIES OF THIS PLAN SHEET.

TO ACCOMPANY PLANS DATED 6-1-15

2010 REVISED STANDARD PLAN RSP P18

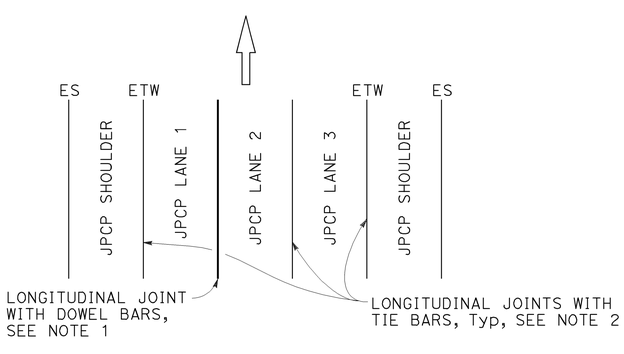

3 LANES WITH CONCRETE SHOULDERS
PLAN

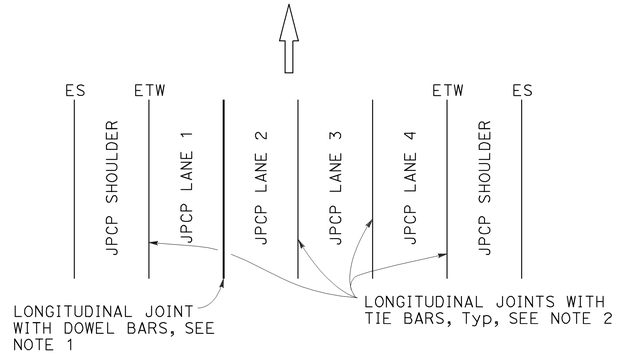

4 LANES WITH CONCRETE SHOULDERS
PLAN

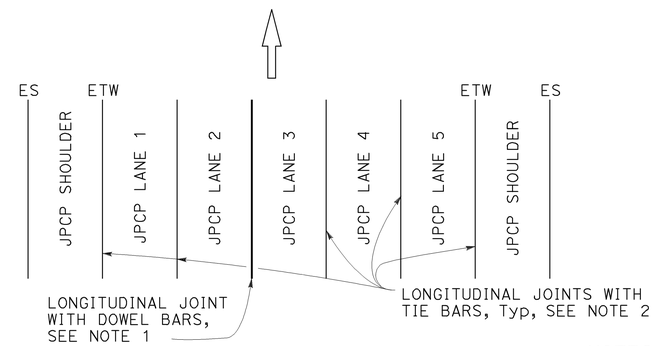

5 LANES WITH CONCRETE SHOULDERS
PLAN

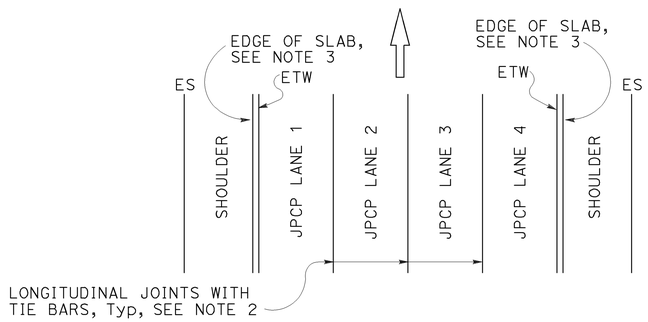

4 LANES OR LESS WITH AC SHOULDERS
PLAN

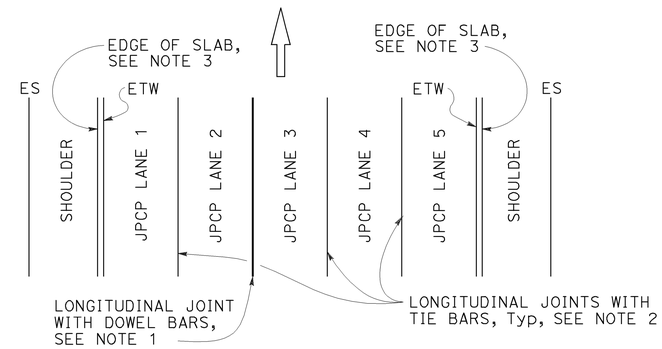

5 LANES WITH AC SHOULDERS
PLAN

NEW CONSTRUCTION

Location of Longitudinal Joints
For JPCP

NOTES:

1. See Revised Standard Plan RSP P10 for longitudinal joint with dowel bars.
2. See Revised Standard Plan RSP P15 for longitudinal joint with tie bars.
3. S= Reservoir depth.
   S= 7/8" ± 1/16" for asphalt rubber seals
   S= 9/16" ± 1/16" for silicone seals
   Preformed compression seals must be 13/16" wide and S= 1 11/16" ± 1/16"

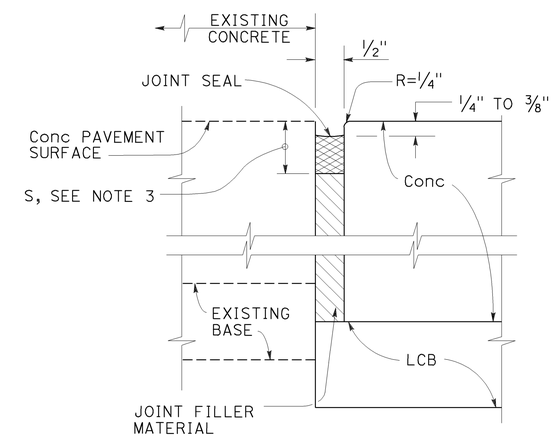

DETAIL "A"

ISOLATION JOINT

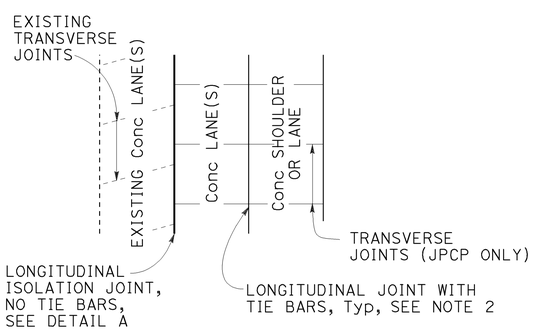

CASE 1
PLAN

Transverse Joints do not align between new and existing.

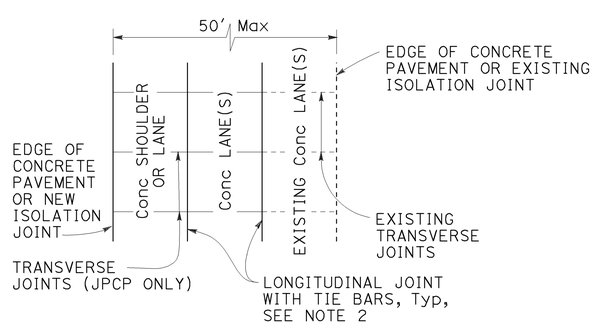

CASE 2
PLAN

Transverse Joints align between new and existing.
(For JPCP only)

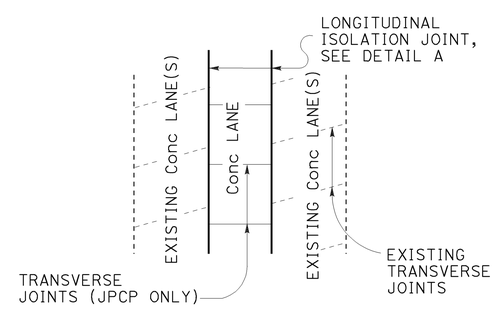

CASE 3 (INTERIOR LANE REPLACEMENT)
PLAN

Transverse Joints do not align between new and existing.

LANE/SHOULDER ADDITION OR RECONSTRUCTION

For JPCP and CRCP

STATE OF CALIFORNIA
DEPARTMENT OF TRANSPORTATION

CONCRETE PAVEMENT LANE SCHEMATICS AND ISOLATION JOINT DETAIL

NO SCALE

RSP P18 DATED JULY 19, 2013 SUPERSEDES RSP P18 DATED APRIL 20, 2012 AND STANDARD PLAN P18 DATED MAY 20, 2011 - PAGE 135 OF THE STANDARD PLANS BOOK DATED 2010.

REVISED STANDARD PLAN RSP P18

5-31-13

Dist	COUNTY	ROUTE	POST MILES TOTAL PROJECT	SHEET No.	TOTAL SHEETS
04	Ala	580	R4.0	37	58

William K. Farnbach
REGISTERED CIVIL ENGINEER

July 19, 2013
PLANS APPROVAL DATE

REGISTERED PROFESSIONAL ENGINEER
William K. Farnbach
No. C49042
Exp. 9-30-14
CIVIL
STATE OF CALIFORNIA

THE STATE OF CALIFORNIA OR ITS OFFICERS OR AGENTS SHALL NOT BE RESPONSIBLE FOR THE ACCURACY OR COMPLETENESS OF SCANNED COPIES OF THIS PLAN SHEET.

TO ACCOMPANY PLANS DATED 6-1-15

2010 REVISED STANDARD PLAN RSP P20

NOTES:

1. Details do not apply to isolation joints and longitudinal construction joints.
2. Tie bars, dowel bars, and bar reinforcement are not shown.
3. Depths are measured from the final concrete pavement surface elevation after any grinding.

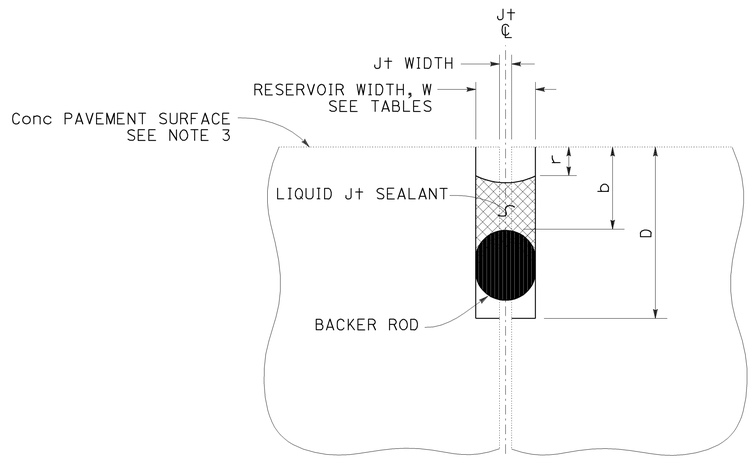

LIQUID JOINT SEALANT

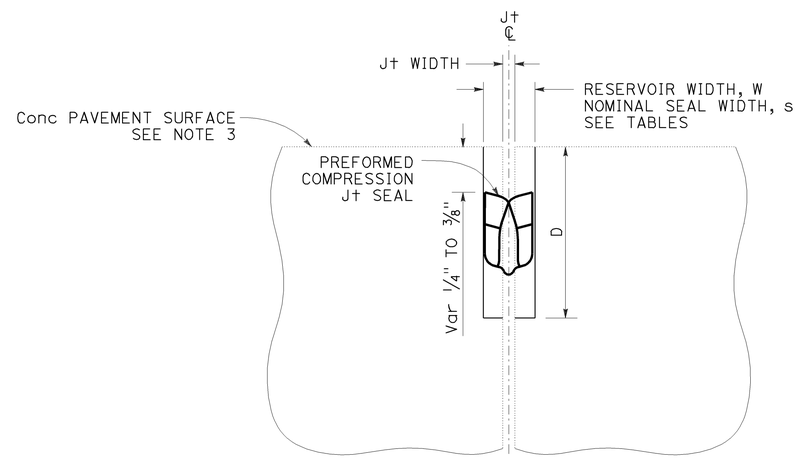

PREFORMED COMPRESSION JOINT SEAL

Const SEASON	Min RESERVOIR WIDTH * W ± 1/16"
WINTER	1/4"
SPRING	3/8"
SUMMER	3/8"
FALL	3/8"

* Minimum reservoir width for replace joint seal = existing joint width + 1/8"

RESERVOIR WIDTH W ±1/16"	LIQUID JOINT SEALANT DIMENSIONS					
	BACKER ROD NOMINAL Dia *	DEPTHS (ASPHALT RUBBER) **		DEPTHS (SILICONE)		
		RESERVOIR D ± 1/4"	BACKER ROD b ± 1/16"	RESERVOIR D ± 1/4"	BACKER ROD b ± 1/16"	RECESS r ± 1/16"
1/4"	3/8"	1 3/4"	7/8"	1 3/8"	1/2"	1/4"
3/8"	1/2"	1 7/8"	7/8"	1 1/2"	1/2"	1/4"
1/2"	3/4"	2"	7/8"	1 3/4"	9/16"	5/16"
5/8"	7/8"	2 1/4"	1"	2"	5/8"	5/16"
3/4"	1"	2 3/4"	1 1/8"	2 1/4"	3/4"	3/8"
7/8"	1 1/4"	3"	1 1/4"	2 1/2"	13/16"	3/8"
1"	1 1/2"	3 1/4"	1 3/8"	2 5/8"	7/8"	3/8"
1 1/8"	1 1/2"	3 1/2"	1 1/2"	2 13/16"	1"	1/2"

* Larger diameter backer rods may be substituted according to manufacturer recommendations if reservoir depth is increased equivalently.

** Asphalt rubber sealant recess depth "r" varies from 1/4" to 3/8"

RESERVOIR WIDTH W ±1/16"	PREFORMED COMPRESSION JOINT SEAL DIMENSIONS	
	NOMINAL SEAL WIDTH s	RESERVOIR DEPTH D ± 1/4"
1/4"	7/16"	1 1/4"
3/8"	11/16"	1 7/16"
1/2"	13/16"	1 11/16"
5/8"	1"	1 7/8"
3/4"	1 1/4"	2 1/8"
7/8"	1 5/8"	2 5/8"
1"	1 5/8"	2 5/8"
1 1/8"	2"	2 7/8"

STATE OF CALIFORNIA
DEPARTMENT OF TRANSPORTATION

JOINT SEALS

NO SCALE

RSP P20 DATED JULY 19, 2013 SUPERSEDES STANDARD PLAN P20
DATED MAY 20, 2011 - PAGE 136 OF THE STANDARD PLANS BOOK DATED 2010.

REVISED STANDARD PLAN RSP P20

6-17-13

TO ACCOMPANY PLANS DATED 6-1-15

Dist	COUNTY	ROUTE	POST MILES TOTAL PROJECT	SHEET No.	TOTAL SHEETS
04	Ala	580	R4.0	38	58

REGISTERED CIVIL ENGINEER

October 19, 2012
PLANS APPROVAL DATE

REGISTERED PROFESSIONAL ENGINEER Glenn DeCou No. C34547 Exp. 9-30-13 CIVIL STATE OF CALIFORNIA

THE STATE OF CALIFORNIA OR ITS OFFICERS OR AGENTS SHALL NOT BE RESPONSIBLE FOR THE ACCURACY OR COMPLETENESS OF SCANNED COPIES OF THIS PLAN SHEET.

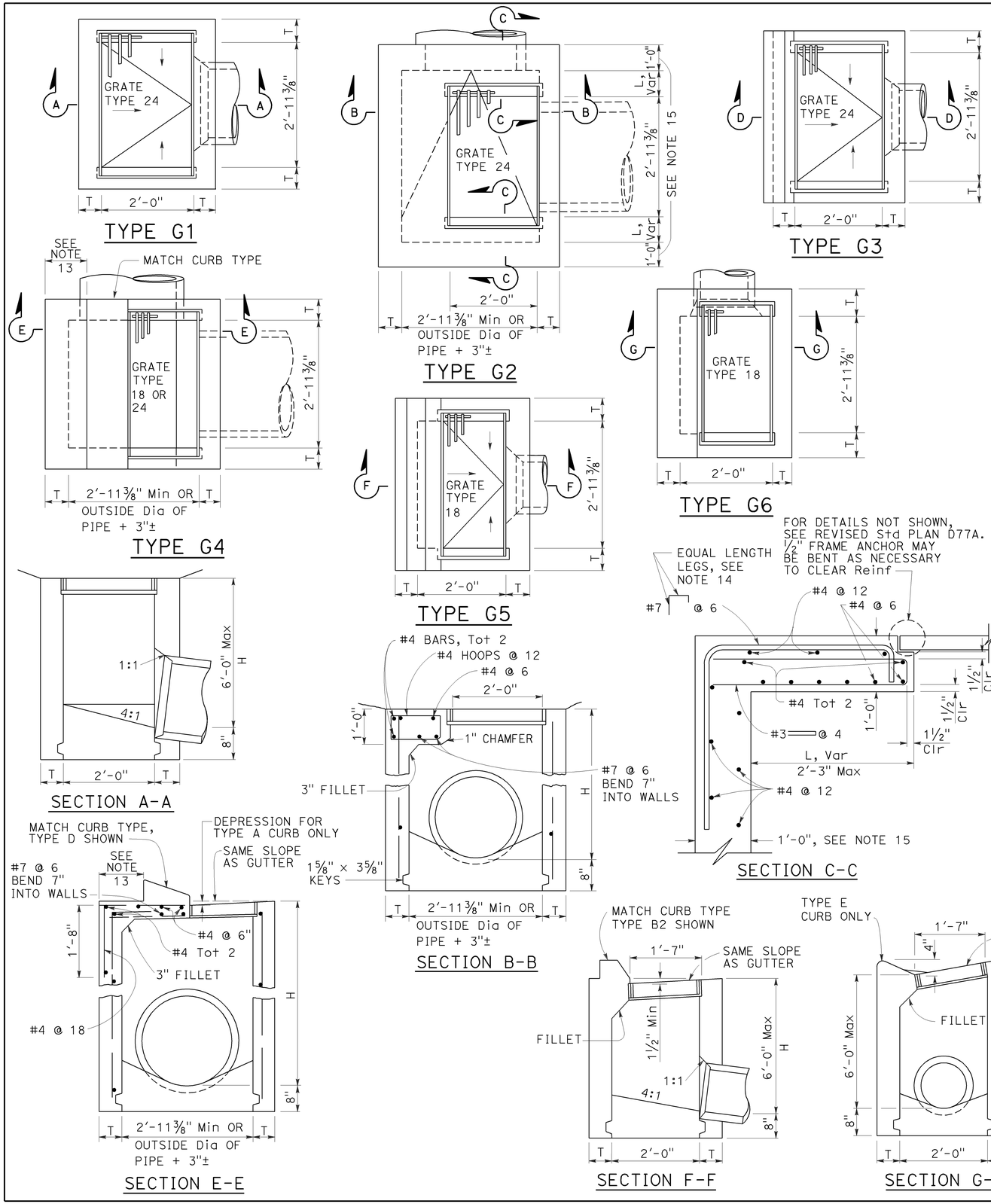

NOTES:

1. "H" is the difference in elevation between the outlet pipe flow line and the normal gutter grade line undepressed.
2. For "T" wall thickness, see Table A below.
3. Wall reinforcing not required when "H" is 8'-0" or less and the unsupported width or length is 7'-0" or less. Walls exceeding these limits shall be reinforced with #4 bars @ 1'-6" ± centers placed 1½" clear to inside of box unless otherwise shown.
4. Inlet bottom reinforcing not required. See Standard Plan D74C for alternative reinforced bottom and alternative half round bottom.
5. Steps-None required where "H" is less than 2'-6". Where "H" is 2'-6" or more, install steps with lowest rung 1'-0" above the floor and highest rung not more than 6" below top of inlet. The distance between steps shall not exceed 1'-0" and shall be uniform throughout the length of the wall. Place steps in the wall without an opening. Steps inserts may be substituted for the bar steps. Step inserts shall comply with State Industrial Safety requirements. See Standard Plan D74C for step details.
6. Details shown apply to both metal and concrete pipe.
7. Pipe(s) can be placed in any wall.
8. Curb section shall match adjacent curb.
9. Basin floors shall have wood trowel finish and a minimum slope of 12:3 from all directions toward outlet pipe.
10. Set inlet so that grate bars are parallel to direction of principal surface flow.
11. See Revised Standard Plans D77A and D77B for grate and frame details and weights of miscellaneous iron and steel.
12. See Standard Plan D78A for gutter depression details.
13. This dimenison will vary with different grates, curbs types, box width and wall thickness.
14. Bar may be rotated as necessary to clear opening. Where "L" is 6" or less, bar may be omitted.
15. Where "L" is 6" or less, wall thickness shall be as shown in Table A.
16. Cast-in-place inlets to be formed around all pipes/stubs intersecting the inlet, and concrete poured in one continuous operation. Precast inlets shall have mortared connections conforming to details for Type GCP Inlet shown on Standard Plan D75B. See Standard Specifications for mortar composition.

TABLE A

CONCRETE QUANTITIES				
TYPE	H=3'-0" TO 8'-0" (T=6")		H=8'-1" TO 20'-0" (T=8")	
	H=3'-0" (CY)	ADDITIONAL PCC PER FOOT (CY)	H=8'-1" (CY)	ADDITIONAL PCC PER FOOT (CY)
G-1	0.95	0.220	See Note A	SEE NOTE A
G-2*	1.31	0.255	3.50	0.357
G-3	1.03	0.220	See Note A	SEE NOTE A
G-4* (TYPE 24)	1.27	0.255	3.48	0.357
G-4* (TYPE 18)	1.30	0.255	3.50	0.357
G-5	1.02	0.220	SEE NOTE A	SEE NOTE A
G-6	1.04	0.220	SEE NOTE A	SEE NOTE A

TABLE BASED ON 8" FLOOR SLAB. NO DEDUCTIONS ARE TO BE MADE TO THESE QUANTITIES BECAUSE OF PIPE OPENINGS, DIFFERENT FLOOR ALTERNATIVES OR DIFFERENT CURB TYPES. * QUANTITIES FOR TYPE G-2 AND G-4 INLETS BASED ON THE MINIMUM INTERIOR DIMENSIONS.

NOTE A:

Maximum allowable height 6'-0".

STATE OF CALIFORNIA
DEPARTMENT OF TRANSPORTATION

DRAINAGE INLETS

NO SCALE

RSP D73 DATED OCTOBER 19, 2012 SUPERSEDES STANDARD PLAN D73 DATED MAY 20, 2011 - PAGE 156 OF THE STANDARD PLANS BOOK DATED 2010.

REVISED STANDARD PLAN RSP D73

2010 REVISED STANDARD PLAN RSP D73

7-19-12

Dist	COUNTY	ROUTE	POST MILES TOTAL PROJECT	SHEET No.	TOTAL SHEETS
04	Ala	580	R4.0	39	58

Raymond Don Tsztoo
REGISTERED CIVIL ENGINEER

April 19, 2013
PLANS APPROVAL DATE

REGISTERED PROFESSIONAL ENGINEER Raymond Don Tsztoo No. C37332 Exp. 6-30-14 CIVIL STATE OF CALIFORNIA

THE STATE OF CALIFORNIA OR ITS OFFICERS OR AGENTS SHALL NOT BE RESPONSIBLE FOR THE ACCURACY OR COMPLETENESS OF SCANNED COPIES OF THIS PLAN SHEET.

TO ACCOMPANY PLANS DATED 6-1-15

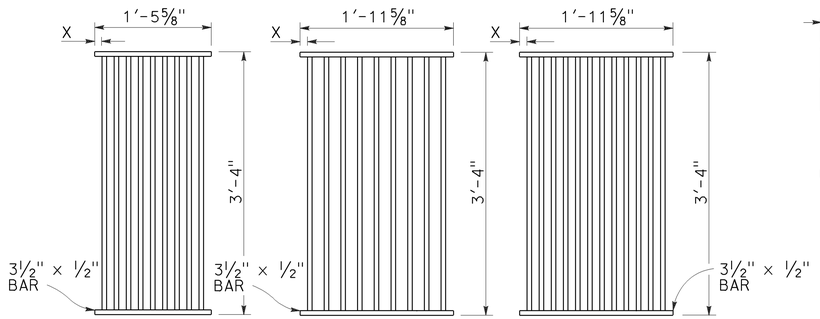

TYPE 18-9

1⅜" Clear spacing. Use within the roadbed on highways where bicycles and pedestrians are excluded.

TYPE 24-9

2" Clear spacing. Use in locations off the roadbed on all types of highways.

TYPE 24-12

1⅜" Clear spacing. Use within the roadbed on highways where bicycles and pedestrians are excluded.

RECTANGULAR GRATE DETAILS

(See table below)

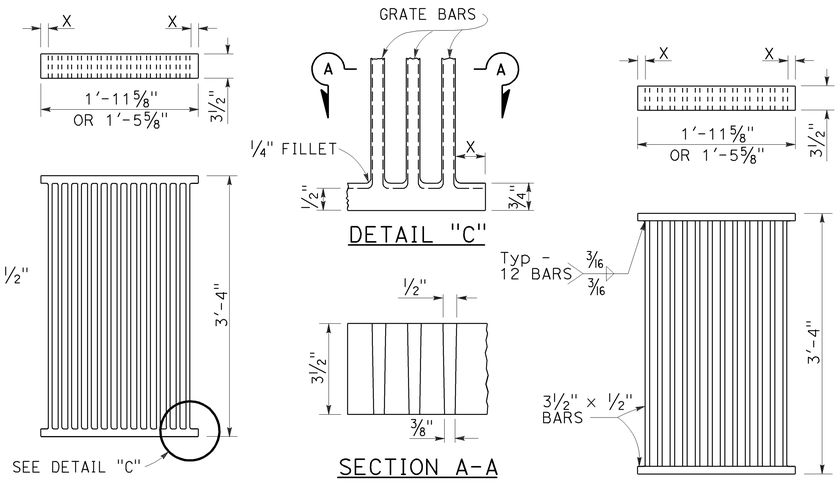

ALTERNATIVE CAST DUCTILE IRON GRATE OR CAST CARBON STEEL GRATE

ALTERNATIVE WELDED GRATE

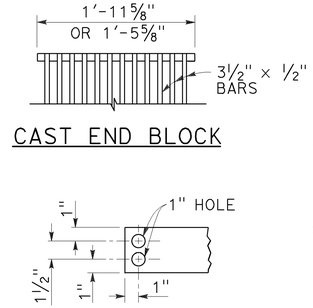

CAST END BLOCK

END OF BAR

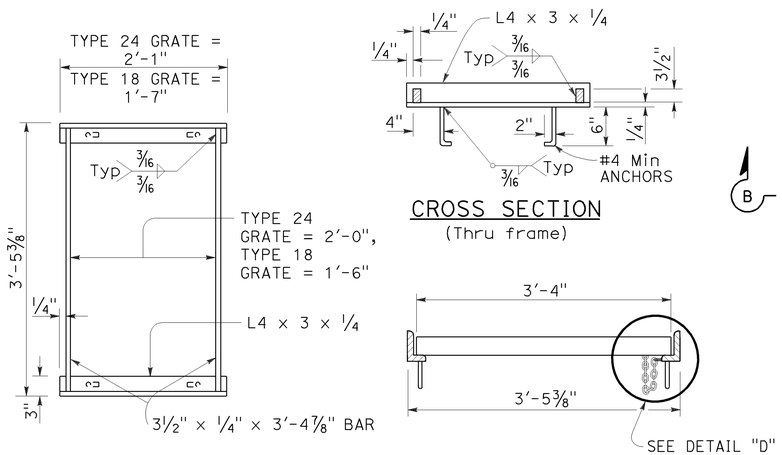

TYPICAL FRAME

CROSS SECTION
(Thru frame)

LONGITUDINAL SECTION
(Thru frame and grate)

RECTANGULAR FRAME DETAILS

(For all rectangular grates)

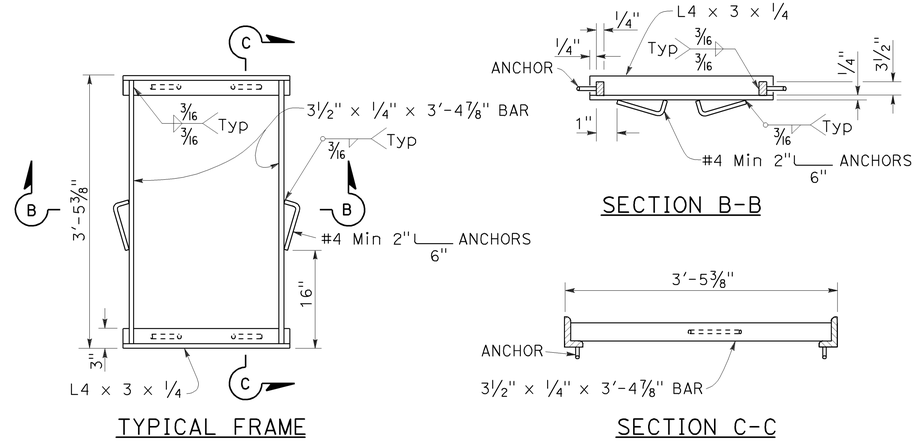

TYPICAL FRAME

SECTION B-B

SECTION C-C

ALTERNATIVE ANCHOR FOR RECTANGULAR FRAME

(For details not shown, See Rectangular Frame Details)

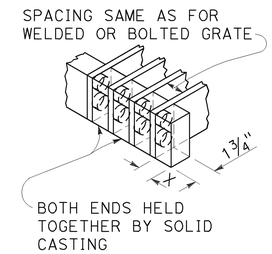

ALTERNATIVE CAST DUCTILE IRON OR CAST CARBON STEEL END BLOCK GRATE

NOTES:

1. Grate type numbers refer to approximate width of grate in inches and number of bars, respectively.
2. Contractor has the option of using cast ductile iron, cast carbon steel, welded, bolted, or cast end block grate.
3. Rounded top of bars optional on all grates.
4. Pipe inlets with a grate shall be placed so that bars parallel direction of principle surface flow.
5. Complete joint penetration butt welds may be substituted for the fillet welds on all anchors.
6. Standard square, hexagon, round or equivalent headed anchors may be substituted for the right angle hooks on the anchors shown on this plan.
7. Grate and frame weights are based on welded grates (weights of face angles, steps, protection bars, etc. are not included).
8. Connect chain to grate and frame only at locations shown on the plans. When chain is required, do not use cast ductile iron grates.

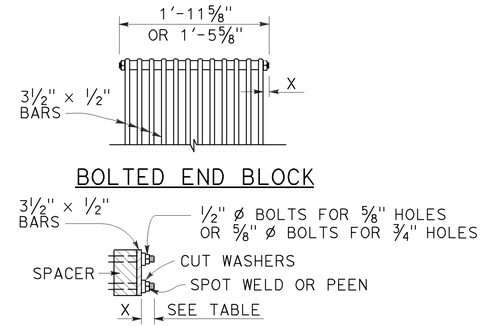

ALTERNATIVE BOLTED GRATE

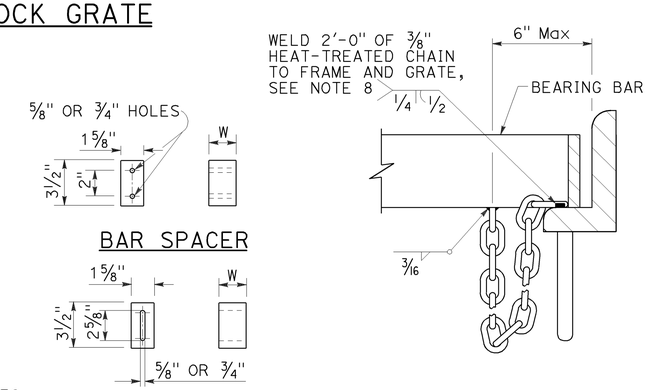

GRATE BAR SPACING TABLE

TYPE	No. OF BARS	CLEAR BAR SPACING	X
18-9	9	1⅜"	1 1/16"
24-9	9	2"	1 9/16"
24-12	12	1⅜"	1¼"

INLET TYPE	COVER TYPE	WEIGHT LB
OS	PLATE	174
OL-7	PLATE	170
OL-10	PLATE	170
OL-14	PLATE	170
OL-21	PLATE	170
OCP	PLATE	112
OCPI	PLATE	112
OCPI	REDWOOD	42
OMP	PLATE	177
OMPI	PLATE	177

INLET TYPE	GRATE TYPE	No. OF GRATES	WEIGHT LB
GDO	24-12	2	634
GOL-7	24-12	1	326
GOL-10	24-12	1	326
GO,G1,G2,G3,G4 (TYPE 24)	24-9	1	263
	24-12	1	326
G4 (TYPE 18),G5,G6	18-9	1	249
GT1	18-9	2	498
GT2	18-9	2	498
GT3	24-12	2	652
GT4	24-12	2	652
TRASH RACK			22
GRATE CHAIN			3

BASIS FOR Misc IRON & STEEL FINAL PAY WEIGHTS FOR DRAINAGE INLETS

(See Note 7)

STATE OF CALIFORNIA
DEPARTMENT OF TRANSPORTATION

GRATE DETAILS No. 1

NO SCALE

RSP D77A DATED APRIL 19, 2013 SUPERSEDES RSP D77A DATED JULY 20, 2012 AND STANDARD PLAN D77A DATED MAY 20, 2011 - PAGE 164 OF THE STANDARD PLANS BOOK DATED 2010.

REVISED STANDARD PLAN RSP D77A

2010 REVISED STANDARD PLAN RSP D77A

4-4-13

Dist	COUNTY	ROUTE	POST MILES TOTAL PROJECT	SHEET No.	TOTAL SHEETS
04	Ala	580	R4.0	40	58

REGISTERED CIVIL ENGINEER

July 19, 2013
PLANS APPROVAL DATE

REGISTERED PROFESSIONAL ENGINEER Gurinderpal Bhullar No. C48815 Exp. 9-30-14 CIVIL STATE OF CALIFORNIA

THE STATE OF CALIFORNIA OR ITS OFFICERS OR AGENTS SHALL NOT BE RESPONSIBLE FOR THE ACCURACY OR COMPLETENESS OF SCANNED COPIES OF THIS PLAN SHEET.

TO ACCOMPANY PLANS DATED 6-1-15

TABLE 1

TAPER LENGTH CRITERIA AND CHANNELIZING DEVICE SPACING

SPEED (S)	MINIMUM TAPER LENGTH * FOR WIDTH OF OFFSET 12 FEET (W)				MAXIMUM CHANNELIZING DEVICE SPACING		
					X	Y	Z **
	TANGENT 2L	MERGING L	SHIFTING L/2	SHOULDER L/3	TAPER	TANGENT	CONFLICT
mph	ft	ft	ft	ft	ft	ft	ft
20	160	80	40	27	20	40	10
25	250	125	63	42	25	50	12
30	360	180	90	60	30	60	15
35	490	245	123	82	35	70	17
40	640	320	160	107	40	80	20
45	1080	540	270	180	45	90	22
50	1200	600	300	200	50	100	25
55	1320	660	330	220	55	110	27
60	1440	720	360	240	60	120	30
65	1560	780	390	260	65	130	32
70	1680	840	420	280	70	140	35

* - For other offsets, use the following merging taper length formula for L:
For speed of 40 mph or less, $L = WS^2/60$
For speed of 45 mph or more, $L = WS$

Where: L = Taper length in feet
W = Width of offset in feet
S = Posted speed limit, off-peak 85th-percentile speed prior to work starting, or the anticipated operating speed in mph

** - Use for taper and tangent sections where there are no pavement markings or where there is a conflict between existing pavement markings and channelizers (CA).

TABLE 2

LONGITUDINAL BUFFER SPACE AND FLAGGER STATION SPACING

SPEED *	Min D **	DOWNGRADE Min D ***		
		-3%	-6%	-9%
mph	ft	ft	ft	ft
20	115	116	120	126
25	155	158	165	173
30	200	205	215	227
35	250	257	271	287
40	305	315	333	354
45	360	378	400	427
50	425	446	474	507
55	495	520	553	593
60	570	598	638	686
65	645	682	728	785
70	730	771	825	891

* - Speed is posted speed limit, off-peak 85th-percentile speed prior to work starting, or the anticipated operating speed in mph

** - Longitudinal buffer space or flagger station spacing

*** - Use on sustained downgrade steeper than -3 percent and longer than 1 mile.

TABLE 3

ADVANCE WARNING SIGN SPACING

ROAD TYPE	DISTANCE BETWEEN SIGNS *		
	A	B	C
	ft	ft	ft
URBAN - 25 mph OR LESS	100	100	100
URBAN - MORE THAN 25 mph TO 40 mph	250	250	250
URBAN - MORE THAN 40 mph	350	350	350
RURAL	500	500	500
EXPRESSWAY / FREEWAY	1000	1500	2640

* - The distances are approximate, are intended for guidance purposes only, and should be applied with engineering judgment. These distances should be adjusted by the Engineer for field conditions, if necessary, by increasing or decreasing the recommmended distances.

STATE OF CALIFORNIA
DEPARTMENT OF TRANSPORTATION

TRAFFIC CONTROL SYSTEM TABLES FOR LANE AND RAMP CLOSURES

NO SCALE

RSP T9 DATED JULY 19, 2013 SUPERSEDES RSP T9 DATED APRIL 19, 2013 THAT SUPPLEMENTS THE STANDARD PLANS BOOK DATED 2010.

REVISED STANDARD PLAN RSP T9

2010 REVISED STANDARD PLAN RSP T9

4-30-13

Dist	COUNTY	ROUTE	POST MILES TOTAL PROJECT	SHEET No.	TOTAL SHEETS
04	Ala	580	R4.0	41	58

REGISTERED CIVIL ENGINEER

April 19, 2013
PLANS APPROVAL DATE

REGISTERED PROFESSIONAL ENGINEER Gurinderpal Bhullar No. C48815 Exp. 9-30-14 CIVIL STATE OF CALIFORNIA

THE STATE OF CALIFORNIA OR ITS OFFICERS OR AGENTS SHALL NOT BE RESPONSIBLE FOR THE ACCURACY OR COMPLETENESS OF SCANNED COPIES OF THIS PLAN SHEET.

TO ACCOMPANY PLANS DATED 6-1-15

NOTES:

See Revised Standard Plan RSP T9 for tables.

Use cone spacing X for taper segment, Y for tangent segment or Z for conflict situations, as approriate, per Table 1, unless X, Y, or Z cone spacing is shown on this sheet.

Unless otherwise specified in the special provisions, all temporary warning signs shall have black legend on fluorescent orange background.

California codes are designated by (CA). Otherwise, Federal (MUTCD) codes are shown.

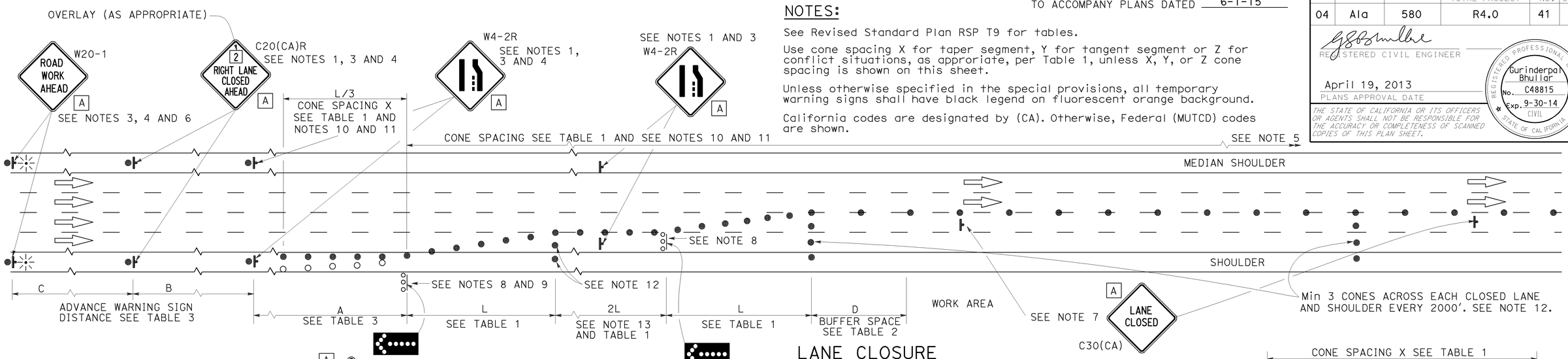

LANE CLOSURE

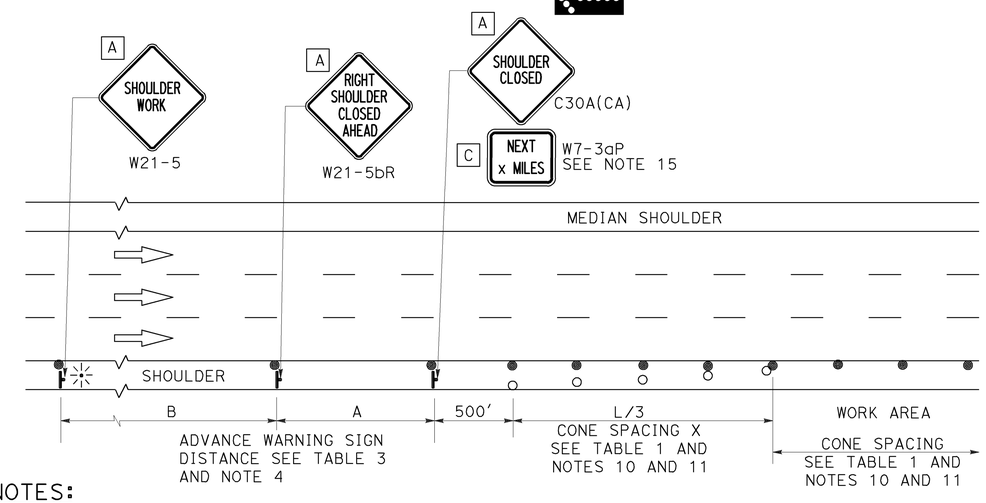

SHOULDER CLOSURE

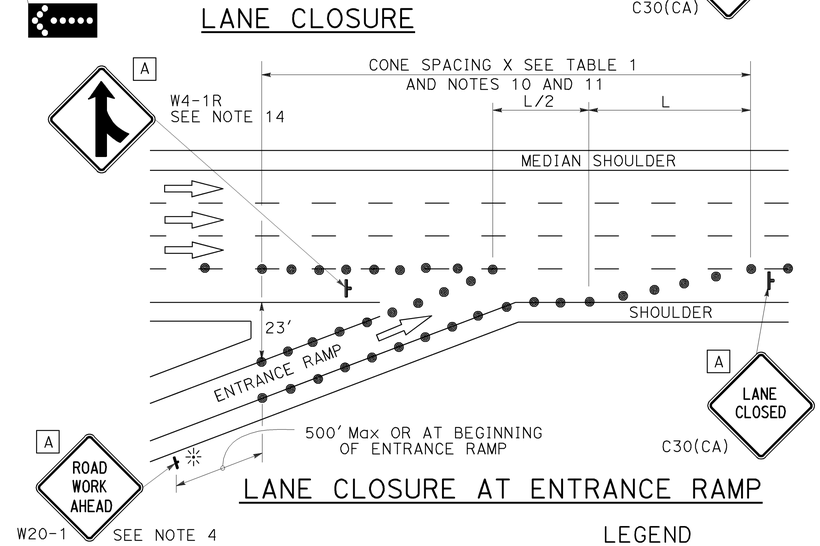

LANE CLOSURE AT ENTRANCE RAMP

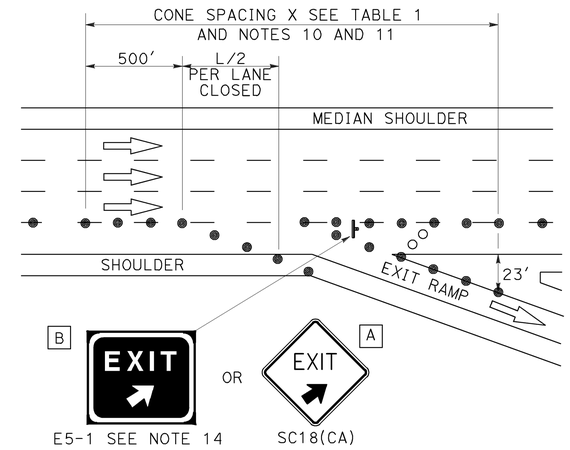

LANE CLOSURE AT EXIT RAMP

NOTES:

1. Median lane closures shall conform to the details as shown except that C20(CA)L and W4-2L signs shall be used.
2. At least one person shall be assigned to provide full time maintenance of traffic control devices for lane closures.
3. Duplicate sign installations are not required:
   a) On opposite shoulder if at least one-half of the available lanes remain open to traffic.
   b) In the median if the width of the median shoulder is less than 8' and the outside lanes are to be closed.
4. Each advance warning sign on each side of the roadway shall be equipped with at least two flags for daytime closure. Each flag shall be at least 16" x 16" in size and shall be orange or fluorescent red-orange in color. Flashing beacons shall be placed at the locations indicated for lane closure during hours of darkness.
5. A G20-2 "END ROAD WORK" sign, with minimum size of 48" x 24" as appropriate, shall be placed at the end of the lane closure unless the end of work area is obvious or ends within a larger project's limits.
6. If the W20-1 sign would follow within 2000' of a stationary W20-1 or G20-1 "ROAD WORK NEXT _____ MILES", use a C20(CA) sign for the first advance warning sign.
7. Place a C30(CA) sign every 2000' throughout length of lane closure.
8. One flashing arrow sign for each lane closed. The flashing arrow signs shall be Type I.
9. A minimum 1500' of sight distance shall be provided where possible for vehicles approaching the first flashing arrow sign. Lane closures shall not begin at top of crest vertical curve or on a horizontal curve.
10. All cones used for lane closures during the hours of darkness shall be fitted with retroreflective bands (or sleeves) as specified in the specifications.
11. Portable delineators, placed at one-half the spacing indicated for traffic cones may be used instead of cones for daytime closures only.
12. Unless otherwise specified in the special provisions, a minimum of 3 cones shall be placed transversely across each closed lane and shoulder at each location where a taper across a traffic lane ends and every 2000' as shown on the "Lane Closure" detail. Two Type II barricades may be used instead of the 3 cones. The transverse alignment of the cones or barricades on the closed shoulder may be shifted from the transverse alignment to provide access to the work.
13. Unless otherwise specified in the special provisions, the 2L tangent shown along lane lines shall be used between the L tapers required for each closed traffic lane.
14. Unless otherwise specified in the special provisions, the E5-1 or SC18(CA) and W4-1 signs shall be used as shown.
15. A W7-3aP "NEXT____ MILES" plaque must be used if theshoulder closure extends beyond the distance that can be perceived by road users.

LEGEND

- TRAFFIC CONE
- TRAFFIC CONE (OPTIONAL TAPER)
- TEMPORARY TRAFFIC CONTROL SIGN
- FLASHING ARROW SIGN (FAS)
- FAS SUPPORT OR TRAILER
- PORTABLE FLASHING BEACON

SIGN PANEL SIZE (Min)

A	48" x 48"
B	72" x 60"
C	36" x 30"

STATE OF CALIFORNIA
DEPARTMENT OF TRANSPORTATION

TRAFFIC CONTROL SYSTEM FOR LANE CLOSURE ON FREEWAYS AND EXPRESSWAYS

NO SCALE

RSP T10 DATED APRIL 19, 2013 SUPERSEDES STANDARD PLAN T10 DATED MAY 20, 2011 - PAGE 237 OF THE STANDARD PLANS BOOK DATED 2010.

REVISED STANDARD PLAN RSP T10

2010 REVISED STANDARD PLAN RSP T10

12-18-12

TO ACCOMPANY PLANS DATED 6-1-15

Dist	COUNTY	ROUTE	POST MILES TOTAL PROJECT	SHEET No.	TOTAL SHEETS
04	Ala	580	R4.0	42	58

REGISTERED CIVIL ENGINEER

April 19, 2013
PLANS APPROVAL DATE

REGISTERED PROFESSIONAL ENGINEER Gurinderpal Bhullar No. C48815 Exp. 9-30-14 CIVIL STATE OF CALIFORNIA

THE STATE OF CALIFORNIA OR ITS OFFICERS OR AGENTS SHALL NOT BE RESPONSIBLE FOR THE ACCURACY OR COMPLETENESS OF SCANNED COPIES OF THIS PLAN SHEET.

NOTES: See Revised Standard Plan RSP T9 for tables.

Use cone spacing X for taper segment, Y for tangent segment or Z for conflict situations, as approriate, per Table 1, unless X, Y, or Z cone spacing is shown on this sheet.

Unless otherwise specified in the special provisions, all temporary warning signs shall have black legend on fluorescent orange background.

California codes are designated by (CA). Otherwise, Federal (MUTCD) codes are shown.

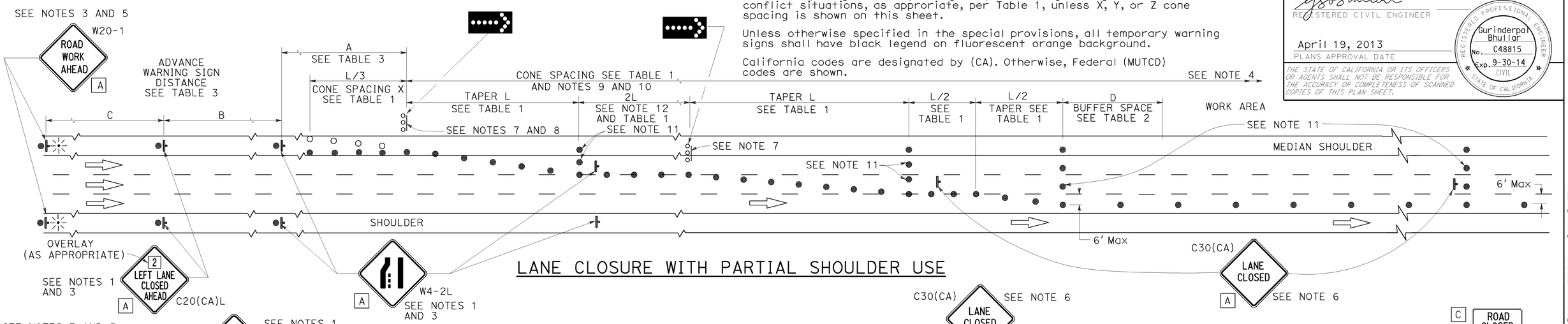

LANE CLOSURE WITH PARTIAL SHOULDER USE

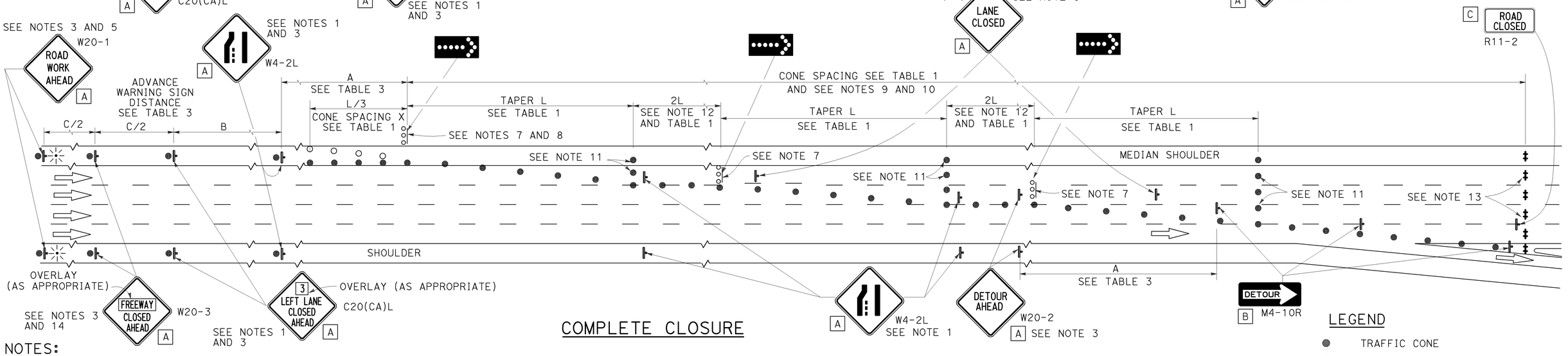

COMPLETE CLOSURE

NOTES:

1. Lane closures on the right side using partial median shoulder as a traffic lane shall conform to the details as shown except that C20(CA)R and W4-2R signs shall be used.
2. At least one person shall be assigned to provide full time maintenance of traffic control devices for lane closures.
3. Each advance warning sign on each side of the roadway shall be equipped with at least two flags for daytime closure. Each flag shall be at least 16" X 16" in size and shall be orange or fluorescent red-orange in color. Flashing beacons shall be placed at the locations indicated for lane closure during hours of darkness.
4. A G20-2 "END ROAD WORK" sign, with minimum size of 48" x 24" as appropriate, shall be placed at the end of the lane closure unless the end of work area is obvious or ends within a larger project's limits.
5. If the W20-1 sign would follow within 2000' of a stationary W20-1 or G20-1 "ROAD WORK NEXT ___ MILES", use a C20(CA) sign for the first advance warning sign.
6. Place a C30(CA) sign every 2000' throughout length of lane closure.
7. One flashing arrow sign for each lane closed. The flashing arrow signs shall be Type I.
8. A minimum 1500' of sight distance shall be provided where possible for vehicles approaching the first flashing arrow sign. Lane closures shall not begin at the top of crest vertical curve or on a horizontal curve.
9. All cones used for lane closures during the hours of darkness shall be fitted with retroreflective bands (or sleeves) as specified in the specifications.
10. Portable delineators, placed at one-half the spacing indicated for traffic cones, may be used instead of cones for daytime closures only.
11. Unless otherwise specified in the special provisions, a minimum of 3 cones shall be placed transversely across each closed lane and shoulder at each location where a taper across a traffic lane ends and every 2000' as shown on the "Lane Closure With Partial Shoulder Use" detail. Two Type II barricades may be used instead of the 3 cones. The transverse alignment of the cones or barricades on the closed shoulder may be shifted from the transverse alignment to provide access to the work.
12. Unless otherwise specified in the special provisions, the 2L tangent shown along lane lines shall be used between the L tapers required for each closed traffic lane.
13. A minimum of Two Type II or III barricades shall be placed across each closed lane and shoulder at the location shown and every 2000' within the complete closure area. Within the complete closure area, the transverse alignment of the barricades on the closed shoulder may be shifted from the transverse alignment to provide access to the work.
14. When specified in the special provisions, a W20-2 "DETOUR AHEAD" sign is to be used in place of the W20-3 "FREEWAY CLOSED AHEAD" sign.

SIGN PANEL SIZE (Min)

A	48" x 48"
B	48" x 18"
C	48" x 30"

LEGEND

- TRAFFIC CONE
- TRAFFIC CONE (OPTIONAL TAPER)
- TEMPORARY TRAFFIC CONTROL SIGN
- FLASHING ARROW SIGN (FAS)
- FAS SUPPORT OR TRAILER
- PORTABLE FLASHING BEACON

STATE OF CALIFORNIA
DEPARTMENT OF TRANSPORTATION

TRAFFIC CONTROL SYSTEM FOR LANE CLOSURES ON FREEWAYS AND EXPRESSWAYS

NO SCALE

RSP T10A DATED APRIL 19, 2013 SUPERSEDES STANDARD PLAN T10A DATED MAY 20, 2011 - PAGE 238 OF THE STANDARD PLANS BOOK DATED 2010.

REVISED STANDARD PLAN RSP T10A

2010 REVISED STANDARD PLAN RSP T10A

12-18-12

Dist	COUNTY	ROUTE	POST MILES TOTAL PROJECT	SHEET No.	TOTAL SHEETS
04	Ala	580	R4.0	43	58

REGISTERED CIVIL ENGINEER

April 19, 2013
PLANS APPROVAL DATE

REGISTERED PROFESSIONAL ENGINEER
Gurinderpal Bhullar
No. C48815
Exp. 9-30-14
CIVIL
STATE OF CALIFORNIA

THE STATE OF CALIFORNIA OR ITS OFFICERS OR AGENTS SHALL NOT BE RESPONSIBLE FOR THE ACCURACY OR COMPLETENESS OF SCANNED COPIES OF THIS PLAN SHEET.

TO ACCOMPANY PLANS DATED 6-1-15

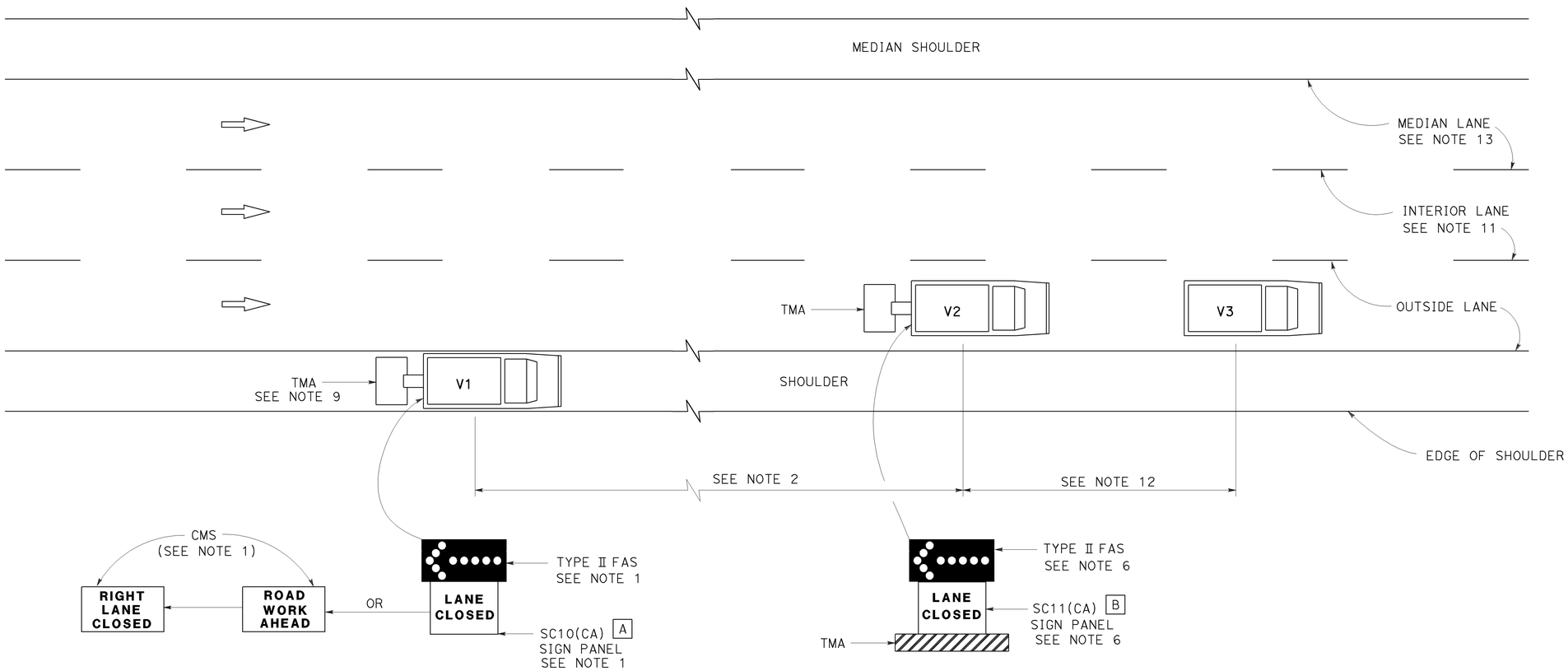

MOVING LANE CLOSURE ON MEDIAN LANE OR OUTSIDE LANE OF MULTILANE HIGHWAYS

SIGN PANEL SIZE (Min)

A 66" x 36"

B 54" x 42"

LEGEND

V1	SIGN VEHICLE
V2	SHADOW VEHICLE
V3	WORK/APPLICATION VEHICLE
	FLASHING ARROW SIGN (FAS)
CMS	CHANGEABLE MESSAGE SIGN
TMA	TRUCK-MOUNTED ATTENUATOR

NOTES:

1. Either a changeable message sign or a SC10(CA) sign panel and a Type II flashing arrow sign shall be mounted on the rear of sign vehicle V1. The changeable message sign shall be sequenced to show the "ROAD WORK AHEAD" message first, followed by the "RIGHT LANE CLOSED" message. For median lane closure, the flashing arrow symbol shall be reversed with the arrowhead on the right and the changeable message sign shall show "LEFT LANE CLOSED".
2. If traffic queues develop, sign vehicle V1 should be positioned upstream from the end of queue. Sign vehicle V1 shall be positioned where highly visible when shoulders are not available.
3. A minimum sight distance of 1500′ should be provided in advance of sign vehicle V1.
4. Sign vehicle V1 should remain at the beginning of horizontal or vertical curves until the other vehicles (V2 and V3) are far enough beyond the curve to resume the minimum sight distance of 1500′.
5. Vehicle-mounted sign panels shall have Type III or above retroreflective sheeting, black on white, or black on fluorescent orange, with 6" minimum series D letters per Caltrans sign specifications.
6. Shadow vehicle V2 shall be equipped with a truck-mounted attenuator. The sign panel shown and a Type II flashing arrow sign shall be mounted on the rear of shadow vehicle V2. For median lane closure the flashing arrow sign symbol shall be displayed with the arrowhead on the right.
7. All vehicles used for lane closures shall be equipped with two-way radios, and the vehicle operators shall maintain communication during the work or application operation.
8. All vehicles shall be equipped with flashing or rotating amber lights.
9. If sign vehicle V1 encroaches into the traffic lane due to insufficient shoulder width, sign vehicle V1 shall be equipped with a truck-mounted attenuator. Sign vehicle V1 shall stay as close to the edge of shoulder as practicable.
10. Where workers would be on foot in the work area, a stationary type lane closure (Revised Standard Plan T10, T11, etc., as applicable) shall be used instead of this plan.
11. For moving lane closure on interior lane of multilane highways, use Revised Standard Plan T16.
12. The spacing between work vehicle(s) and the shadow vehicles, and between each shadow vehicle should be minimized to deter road users from driving in between.
13. When the work/application vehicle V3 occupies the median lane, sign vehicle V1 should drive in the median shoulder and indicate left lane closed ahead.

STATE OF CALIFORNIA
DEPARTMENT OF TRANSPORTATION

TRAFFIC CONTROL SYSTEM FOR MOVING LANE CLOSURE ON MULTILANE HIGHWAYS

NO SCALE

RSP T15 DATED APRIL 19, 2013 SUPERSEDES STANDARD PLAN T15
DATED MAY 20, 2011 - PAGE 243 OF THE STANDARD PLANS BOOK DATED 2010.

REVISED STANDARD PLAN RSP T15

2010 REVISED STANDARD PLAN RSP T15

12-18-12

Dist	COUNTY	ROUTE	POST MILES TOTAL PROJECT	SHEET No.	TOTAL SHEETS
04	Ala	580	R4.0	44	58

REGISTERED CIVIL ENGINEER

April 19, 2013
PLANS APPROVAL DATE

REGISTERED PROFESSIONAL ENGINEER Gurinderpal Bhullar No. C48815 Exp. 9-30-14 CIVIL STATE OF CALIFORNIA

THE STATE OF CALIFORNIA OR ITS OFFICERS OR AGENTS SHALL NOT BE RESPONSIBLE FOR THE ACCURACY OR COMPLETENESS OF SCANNED COPIES OF THIS PLAN SHEET.

TO ACCOMPANY PLANS DATED 6-1-15

2010 REVISED STANDARD PLAN RSP T16

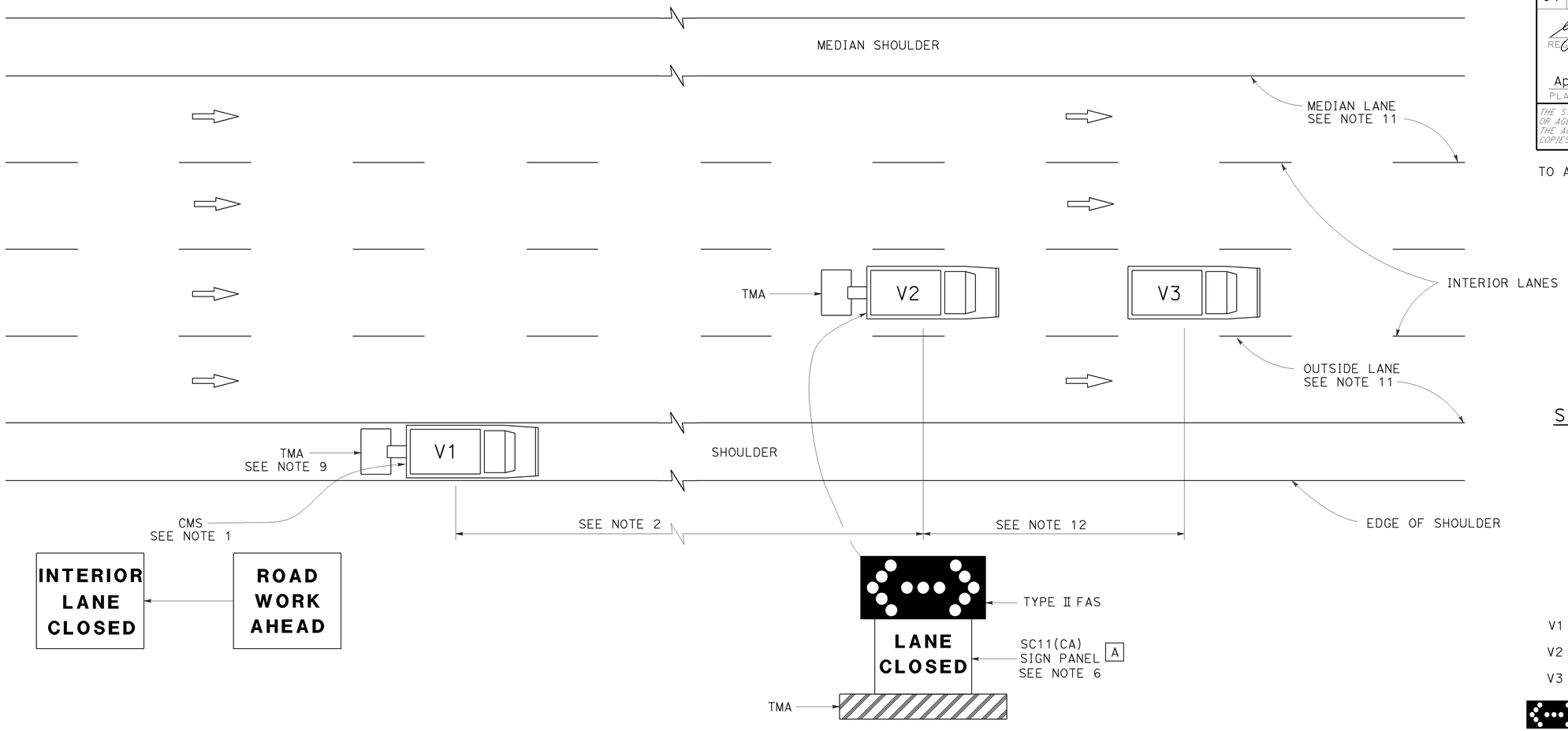

MOVING LANE CLOSURE ON INTERIOR LANE OF MULTILANE HIGHWAYS

SIGN PANEL SIZE (Min)

A 54" x 42"

LEGEND

V1	SIGN VEHICLE
V2	SHADOW VEHICLE
V3	WORK/APPLICATION VEHICLE
	FLASHING ARROW SIGN (FAS) IN FLASHING DOUBLE ARROW MODE
CMS	CHANGEABLE MESSAGE SIGN
TMA	TRUCK-MOUNTED ATTENUATOR

NOTES:

1. A changeable message sign shall be mounted on the rear of sign vehicle V1. The changeable message sign shall be sequenced to show the "ROAD WORK AHEAD" message first, followed by the "INTERIOR LANE CLOSED" message. The message "CENTER LANE CLOSED" may be used in place of the "INTERIOR LANE CLOSED" message.
2. If traffic queues develop, sign vehicle V1 should be positioned upstream from the end of queue. Sign vehicle V1 shall be positioned where highly visible when shoulders are not available.
3. A minimum sight distance of 1500′ should be provided in advance of sign vehicle V1.
4. Sign vehicle V1 should remain at the beginning of horizontal or vertical curves until the other vehicles (V2 and V3) are far enough beyond the curve to resume the minimum sight distance of 1500′.
5. Vehicle-mounted sign panels shall have Type III or above retroreflective sheeting, black on white, or black on fluorescent orange, with 6" minimum series D letters per Caltrans sign specifications.
6. Shadow vehicle V2 shall be equipped with a truck-mounted attenuator. The sign panel shown and a Type II flashing arrow sign shall be mounted on the rear of shadow vehicle V2.
7. All vehicles used for lane closures shall be equipped with two-way radios, and the vehicle operators shall maintain communication during the work or application operation.
8. All vehicles shall be equipped with flashing or rotating amber lights.
9. If sign vehicle V1 encroaches into the traffic lane due to insufficient shoulder width, sign vehicle V1 shall be equipped with a truck-mounted attenuator. Sign vehicle V1 shall stay as close to the edge of shoulder as practicable.
10. Where workers would be on foot in the work area, a stationary type lane closure (Revised Standard Plan T10, T11 etc., as applicable) shall be used instead of this plan.
11. For moving lane closure on median lane or outside lane of multilane highways, use Revised Standard Plan T15.
12. The spacing between work vehicle(s) and the shadow vehicles, and between each shadow vehicle should be minimized to deter road users from driving in between.

STATE OF CALIFORNIA
DEPARTMENT OF TRANSPORTATION

TRAFFIC CONTROL SYSTEM FOR MOVING LANE CLOSURE ON MULTILANE HIGHWAYS

NO SCALE

RSP T16 DATED APRIL 19, 2013 SUPERSEDES STANDARD PLAN T16
DATED MAY 20, 2011 - PAGE 244 OF THE STANDARD PLANS BOOK DATED 2010.

REVISED STANDARD PLAN RSP T16

12-18-12

Dist	COUNTY	ROUTE	POST MILES TOTAL PROJECT	SHEET No.	TOTAL SHEETS
04	Ala	580	R4.0	45	58

REGISTERED CIVIL ENGINEER

November 15, 2013
PLANS APPROVAL DATE

REGISTERED PROFESSIONAL ENGINEER
Tillat Satter
No. C42892
Exp. 3-31-14
CIVIL
STATE OF CALIFORNIA

THE STATE OF CALIFORNIA OR ITS OFFICERS OR AGENTS SHALL NOT BE RESPONSIBLE FOR THE ACCURACY OR COMPLETENESS OF SCANNED COPIES OF THIS PLAN SHEET.

TO ACCOMPANY PLANS DATED 6-1-15

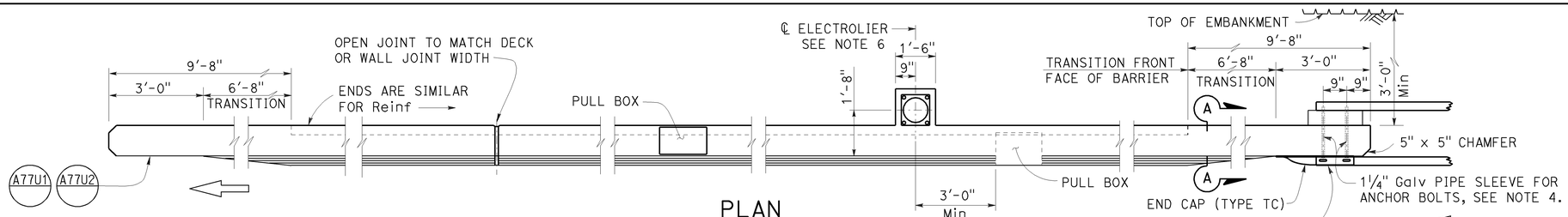

PLAN

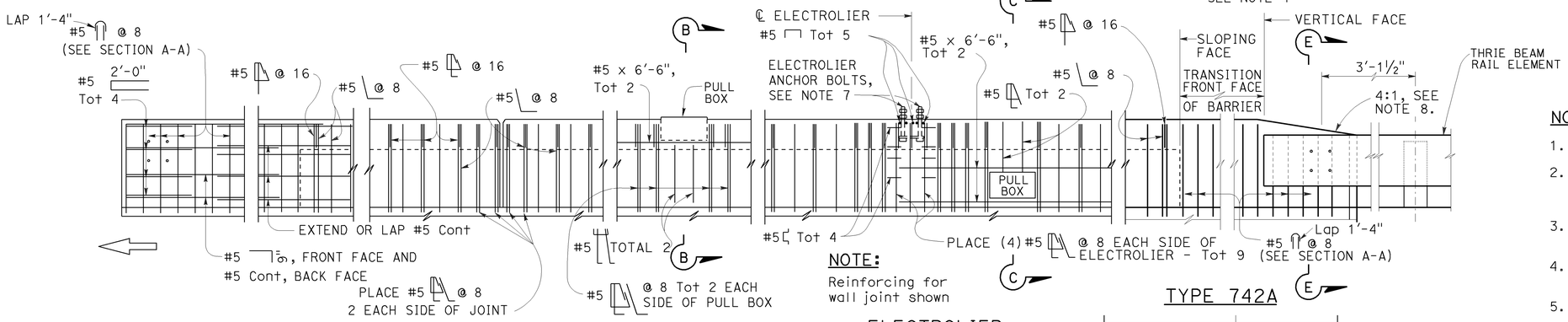

NOTE:
Reinforcing for wall joint shown

METAL RAILING CONNECTION

DECK OR WALL JOINT

ELEVATION

ELECTROLIER
(See Note 5)

TYPE 742A

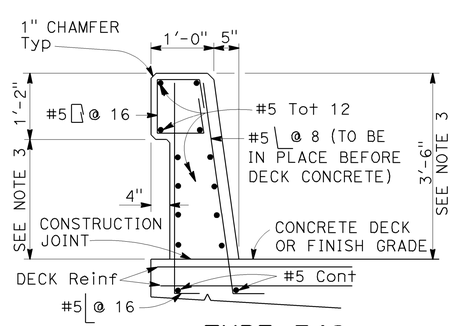

TYPE 742

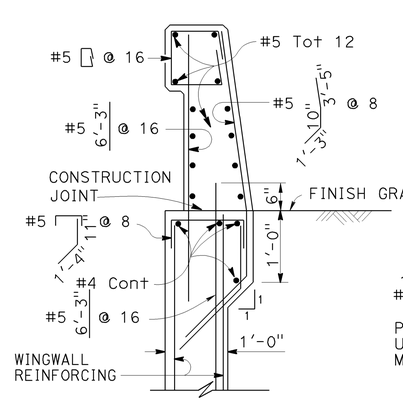

TYPE 742A

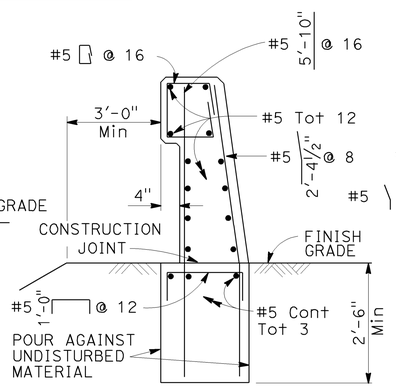

TYPE 742B

NOTE:
Types 742A & 742B are similar to Type 742 except as noted

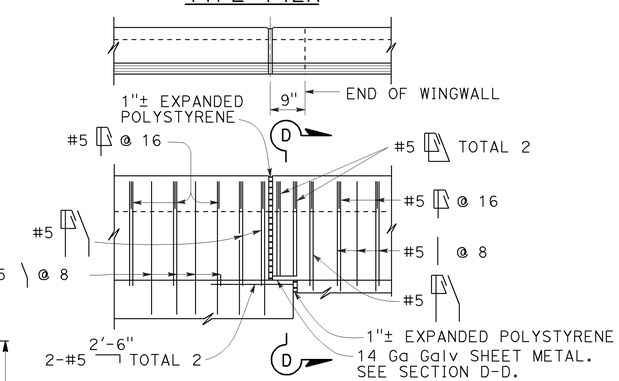

TYPE 742A TYPE 742B

NOTES:

1. Walls are to be backfilled before barrier is placed.
2. Clearance to reinforcing steel in barrier to be 1", except as noted. Longitudinal reinforcement to stop at all expansion joints.
3. Dimensions may vary with roadway cross slope and with certain thickness of surfacing. See Project Plans.
4. For typical metal railing connection details not shown, see Revised Standard Plans RSP A77U1 and RSP A77U2.
5. See Standard Plans ES-9A, ES-9B, ES-9C, ES-9D and ES-9E for electrical details. The maximum number of conduits in the barrier is limited to two 2" conduits along with one 3" conduit. When a 3" conduit is used, it is restricted to the base of the barrier.
6. For electrolier mounting details, See Standard Plans ES-6A and ES-6B.
7. Minimum concrete edge distance, to the reinforcing shown, shall be maintained. Edge distance may be adjusted to accommodate increase in concrete cover for architectual treatment.
8. Taper the top of the end of the bridge railing at 4:1 to match the top elevation of the thrie beam rail element.

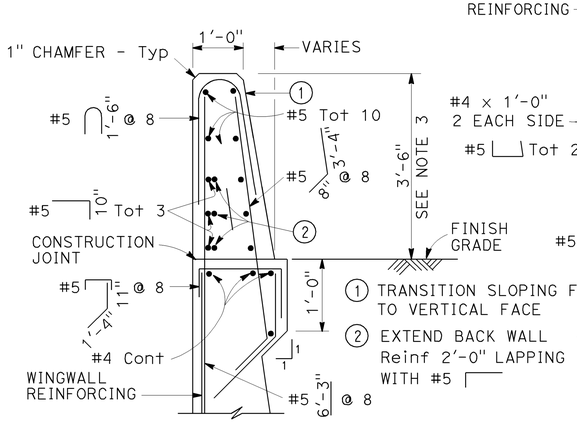

SECTION A-A

Details shown for barrier anchorage to Type 742A. Anchorage for barrier Types 742 and 742A are similar to their respective details.

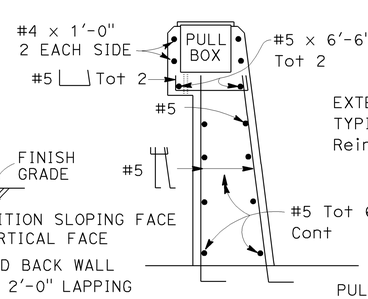

SECTION B-B

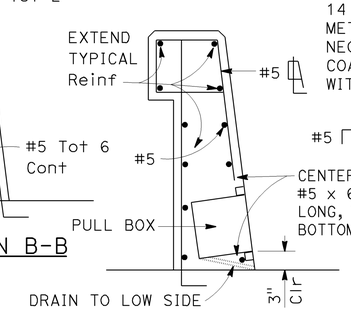

SECTION C-C
See Notes

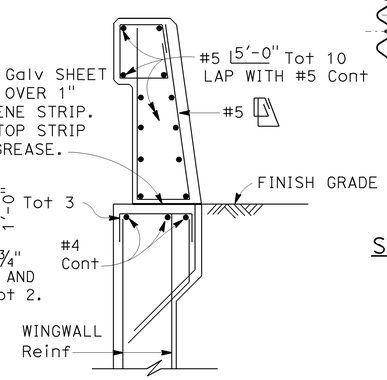

SECTION D-D

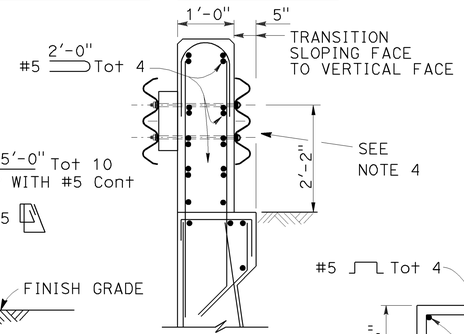

SECTION E-E
See Note 4

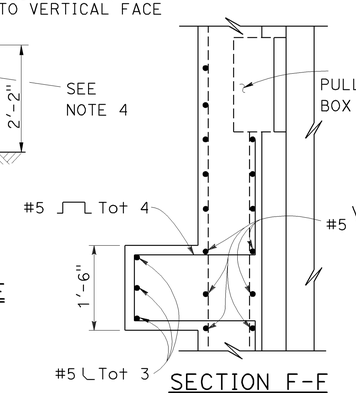

SECTION F-F

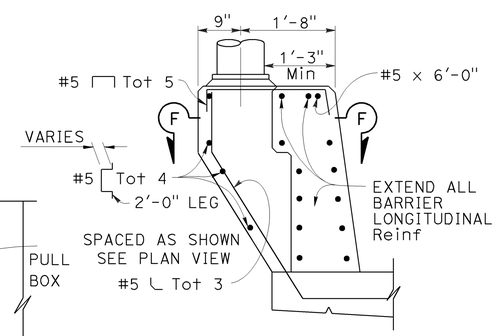

PEDESTAL ELEVATION

STATE OF CALIFORNIA
DEPARTMENT OF TRANSPORTATION

CONCRETE BARRIER TYPE 742

NO SCALE

RSP B11-57 DATED NOVEMBER 15, 2013 SUPERSEDES RSP B11-57 DATED JULY 19, 2013 AND STANDARD PLAN B11-57 DATED MAY 20, 2011 - PAGE 299 OF THE STANDARD PLANS BOOK DATED 2010.

REVISED STANDARD PLAN RSP B11-57

2010 REVISED STANDARD PLAN RSP B11-57

10-4-13

DIST	COUNTY	ROUTE	POST MILES TOTAL PROJECT	SHEET No.	TOTAL SHEETS
04	Ala	580	R4.0	46	58

REGISTERED CIVIL ENGINEER 2-25-15 DATE

6-1-15
PLANS APPROVAL DATE

REGISTERED PROFESSIONAL ENGINEER LINAN WANG No. 54714 Exp. 12-31-15 CIVIL STATE OF CALIFORNIA

The State of California or its officers or agents shall not be responsible for the accuracy or completeness of scanned copies of this plan sheet.

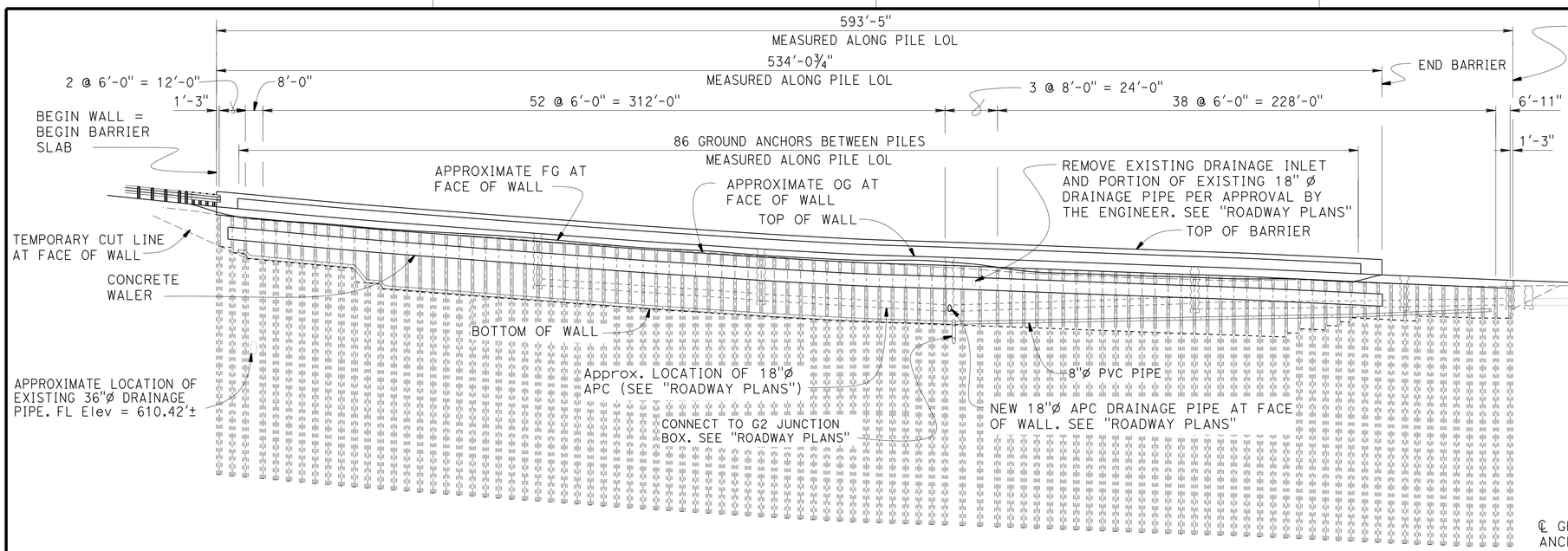

ELEVATION

HORIZONTAL : 1" = 30'
VERTICAL: 1" = 15'

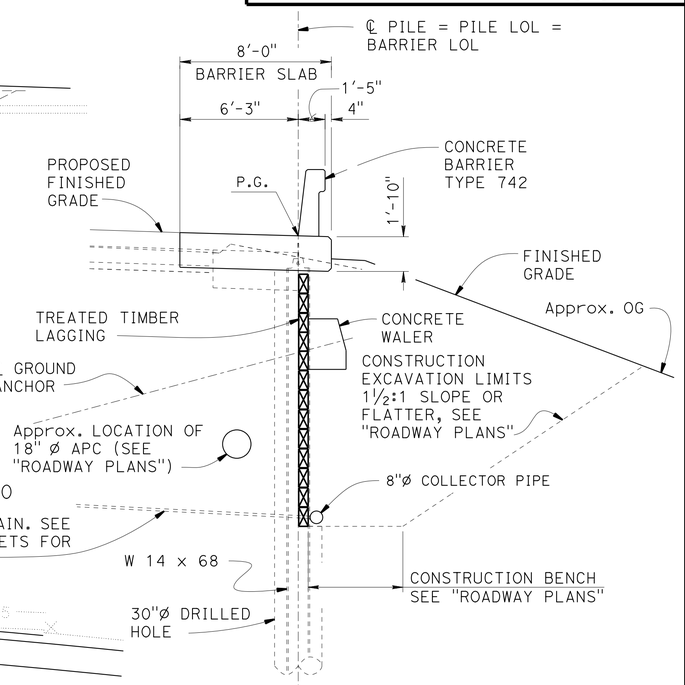

TYPICAL SECTION

¼" = 1'-0"

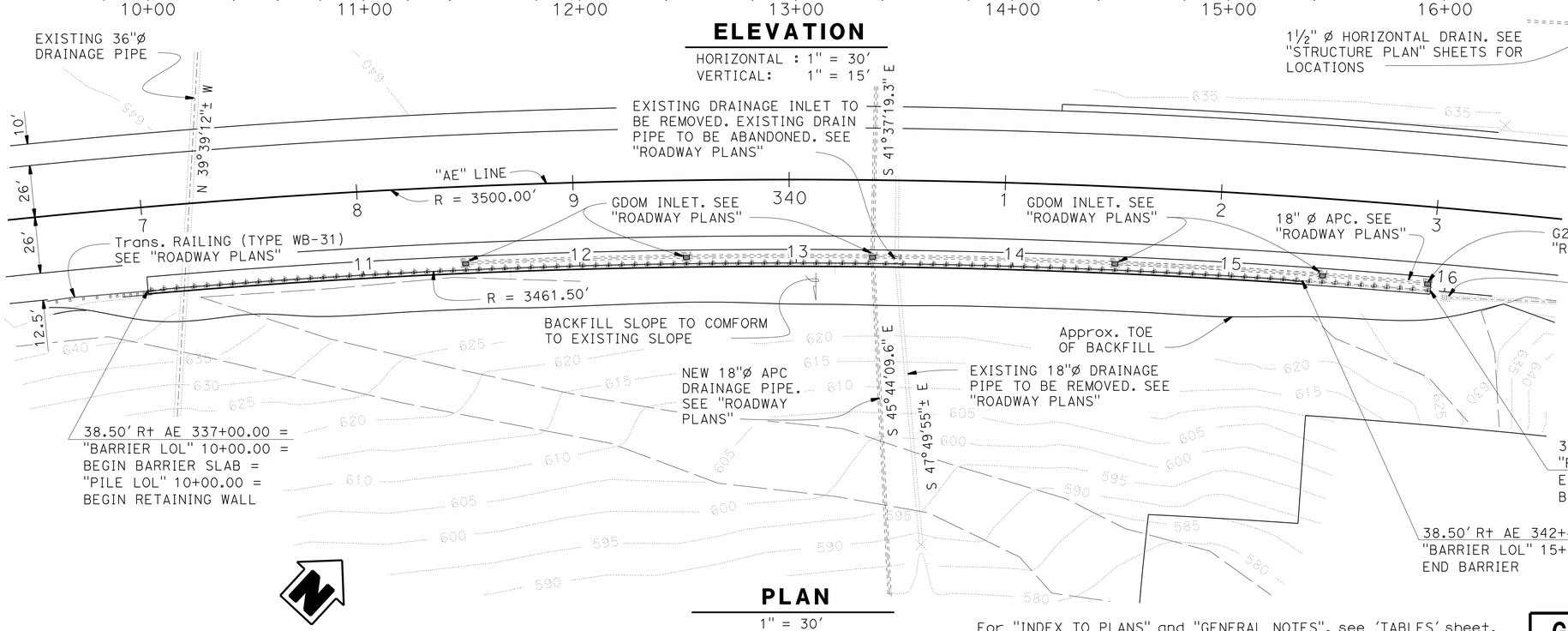

PLAN

1" = 30'

NOTE
For "CURVE DATA" see "ROADWAY PLANS".

For "INDEX TO PLANS" and "GENERAL NOTES", see 'TABLES' sheet.

GROUND ANCHOR SOLDIER PILE WALL
RETAINING WALL AT P.M. 3.9 (EB 580)
GENERAL PLAN

X
DESIGN ENGINEER

	BY	CHECKED				
DESIGN	Ben Nguyen	Rafael Salazar	LOAD & RESISTANCE FACTOR DESIGN			
DETAILS	Jeff Thorne	Ben Nguyen	LAYOUT	Ben Nguyen	Linan Wang	
QUANTITIES	Ben Nguyen	Linan Wang	SPECIFICATIONS	X	PLANS AND SPECS COMPARED X	

STATE OF CALIFORNIA
DEPARTMENT OF TRANSPORTATION

DIVISION OF ENGINEERING SERVICES
STRUCTURE DESIGN
DESIGN BRANCH 4

BRIDGE NO. 33E0404
POST MILE 3.9

ORIGINAL SCALE IN INCHES FOR REDUCED PLANS 0 1 2 3

UNIT: 59-3579
PROJECT NUMBER & PHASE: 0412000008 4
CONTRACT NO.: 04-2G8504

DISREGARD PRINTS BEARING EARLIER REVISION DATES

REVISION DATES: 4-29-15 ~~7-1-14~~ ~~3-13-14~~ ~~4-9-15~~

SHEET 1 OF 13

USERNAME => s130819 DATE PLOTTED => 09-JUN-2015 TIME PLOTTED => 15:50

STRUCTURES DESIGN GENERAL PLAN SHEET (ENGLISH) (REV.09-01-10)

FILE => 33e0404-a-gp01.dgn

DIST	COUNTY	ROUTE	POST MILES TOTAL PROJECT	SHEET No.	TOTAL SHEETS
04	Ala	580	R4.0	47	58

REGISTERED CIVIL ENGINEER 2-25-15 DATE

6-1-15
PLANS APPROVAL DATE

REGISTERED PROFESSIONAL ENGINEER LINAN WANG No. 54714 Exp. 12-31-15 CIVIL STATE OF CALIFORNIA

The State of California or its officers or agents shall not be responsible for the accuracy or completeness of scanned copies of this plan sheet.

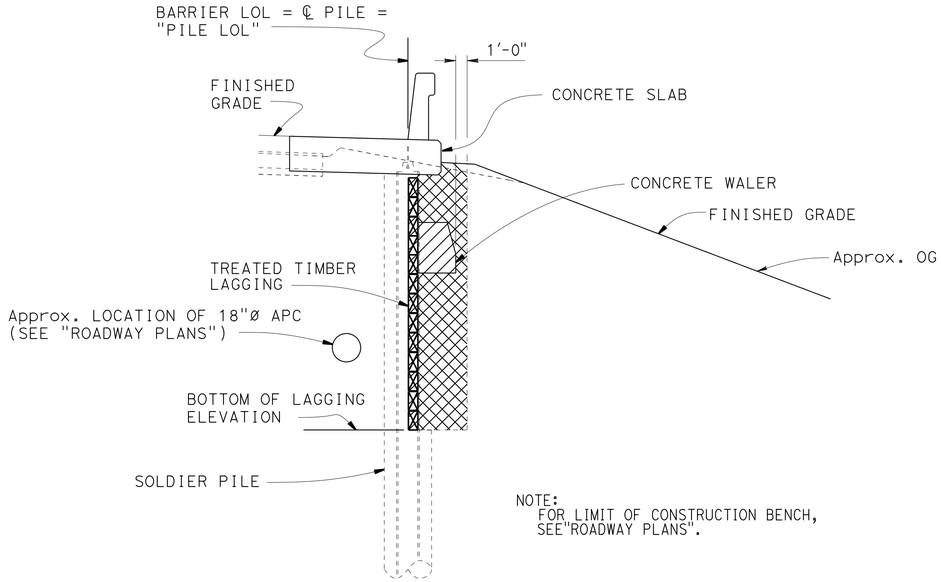

TYPICAL SECTION AT SOLDIER PILE

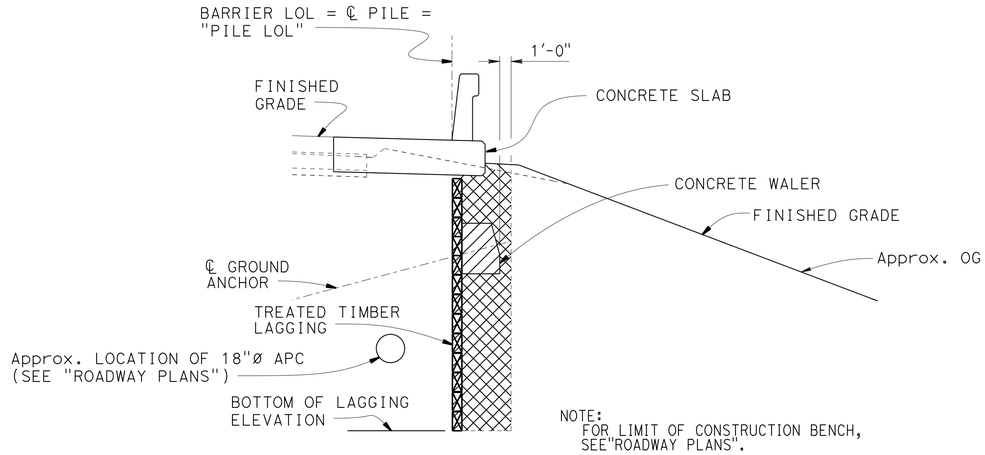

TYPICAL SECTION BETWEEN SOLDIER PILES

LIMITS OF EXCAVATION AND BACKFILL

NO SCALE

GENERAL NOTES
LOAD AND RESISTANCE FACTOR DESIGN

DESIGN:
* AASHTO LRFD Bridge Design Specifications, Forth Edition with the 2010, 2011, Interims and the California Amendments.

LIVE LOADING:
2'-0" Soil Surcharge

SEISMIC LOADING:
Ground Anchor - 14 H psf: (Rectangular Pressure Diagram)
H = Design Height of wall.

CONCRETE:
fy = 60 ksi
f'c = 3.6 ksi

STRUCTURAL STEEL (new construction):
fy = Grade 36 minimum

STRUCTURAL TIMBER:
Treated Douglas Fir, Grade No. 1 or better.
Timber to be full sawn.
Timber Lagging Size: 6" (deep) x 12" (wide)

SOIL PARAMETERS:
GROUND ANCHOR WALL:
SLIDE ZONE - ø = 15° C = 350 psf ɣ = 120 pcf

PRESTRESSING STEEL (GROUND ANCHOR):
See 'SUB HORIZONTAL GROUND ANCHOR DETAILS' sheet

LEGEND :

Structure Excavation

Structure Backfill

QUANTITIES

STRUCTURE EXCAVATION (SOLDIER PILE WALL)	1,135	CY
STRUCTURE BACKFILL (SOLDIER PILE WALL)	825	CY
CONCRETE BACKFILL (SOLDIER PILE WALL)	445	CY
LEAN CONCRETE BACKFILL	428	CY
GROUND ANCHOR (SUBHORIZONTAL)	86	EA
STEEL SOLDIER PILE (W 14 X 68)	4,900	LF
30" DRILLED HOLE	4,950	LF
STRUCTURAL CONCRETE, WALER	108	CY
STRUCTURAL CONCRETE, BARRIER SLAB	293	CY
BAR REINFORCING STEEL (WALER)	33,100	LB
TIMBER LAGGING	40	MFBM
CLEAN AND PAINT STEEL SOLDIER PILING	LUMP	SUM
PREPARE AND STAIN CONCRETE	3,400	SQFT
FURNISH AND INSTALL DRAIN PIPE (HORIZONTAL DRAIN)	2,891	LF
DRILL HOLE (HORIZONTAL DRAIN)	2,891	LF
MISCELLANEOUS METAL (RETAINING WALL)	1,600	LB
CONCRETE BARRIER (TYPE 742)	534	LF

INDEX TO PLANS

1. GENERAL PLAN
2. GENERAL NOTES
3. STRUCTURE PLAN NO. 1
4. STRUCTURE PLAN NO. 2
5. STRUCTURE PLAN NO. 3
6. TYPICAL SECTION
7. MISCELLANEOUS DETAILS NO. 1
8. MISCELLANEOUS DETAILS NO. 2
9. RETAINING WALL DETAILS NO. 1
10. RETAINING WALL DETAILS NO. 2
11. SUB HORIZONTAL GROUND ANCHOR DETAILS
12. LOG OF TEST BORINGS 1 OF 2
13. LOG OF TEST BORINGS 2 OF 2

STANDARD PLANS DATED 2010

A10A	ACRONYMS AND ABBREVIATIONS (SHEET 1 OF 2)
RSP A10B	ACRONYMS AND ABBREVIATIONS (SHEET 2 OF 2)
A10F	LEGEND - SOIL (SHEET 1 OF 2)
A10G	LEGEND - SOIL (SHEET 2 OF 2)
B11-57	CONCRETE BARRIER TYPE 742

Notes

1. For Concrete Coping details, see "TYPICAL SECTION" sheet.
2. For Right of Way, see 'ROADWAY PLANS'

STANDARD PLAN SHEET NO.

DETAIL NO.

	BY	CHECKED
DESIGN	Ben Nguyen	Rafael Salazar
DETAILS	Jeff Thorne	Ben Nguyen
QUANTITIES	Ben Nguyen	Linan Wang

STATE OF CALIFORNIA
DEPARTMENT OF TRANSPORTATION

DIVISION OF ENGINEERING SERVICES
STRUCTURE DESIGN
DESIGN BRANCH 4

BRIDGE NO. 33E0404
POST MILE 3.9

GROUND ANCHOR SOLDIER PILE WALL
RETAINING WALL AT P.M. 3.9 (EB 580)
GENERAL NOTES

STRUCTURES DESIGN DETAIL SHEET (ENGLISH) (REV. 09-01-10)

ORIGINAL SCALE IN INCHES FOR REDUCED PLANS 0 1 2 3

UNIT: X
PROJECT NUMBER & PHASE: 0412000008 4
CONTRACT NO.: 04-2G8504

DISREGARD PRINTS BEARING EARLIER REVISION DATES

REVISION DATES 3-7-14 4-8-15 5-18-15 3-4-15

SHEET 2 OF 13

FILE => 33e0404-a-notes.dgn

USERNAME => s130819 DATE PLOTTED => 09-JUN-2015 TIME PLOTTED => 15:51

DIST	COUNTY	ROUTE	POST MILES TOTAL PROJECT	SHEET No.	TOTAL SHEETS
04	Ala	580	R4.0	48	58

REGISTERED CIVIL ENGINEER 2-25-15 DATE

6-1-15
PLANS APPROVAL DATE

REGISTERED PROFESSIONAL ENGINEER LINAN WANG No. 54714 Exp. 12-31-15 CIVIL STATE OF CALIFORNIA

The State of California or its officers or agents shall not be responsible for the accuracy or completeness of scanned copies of this plan sheet.

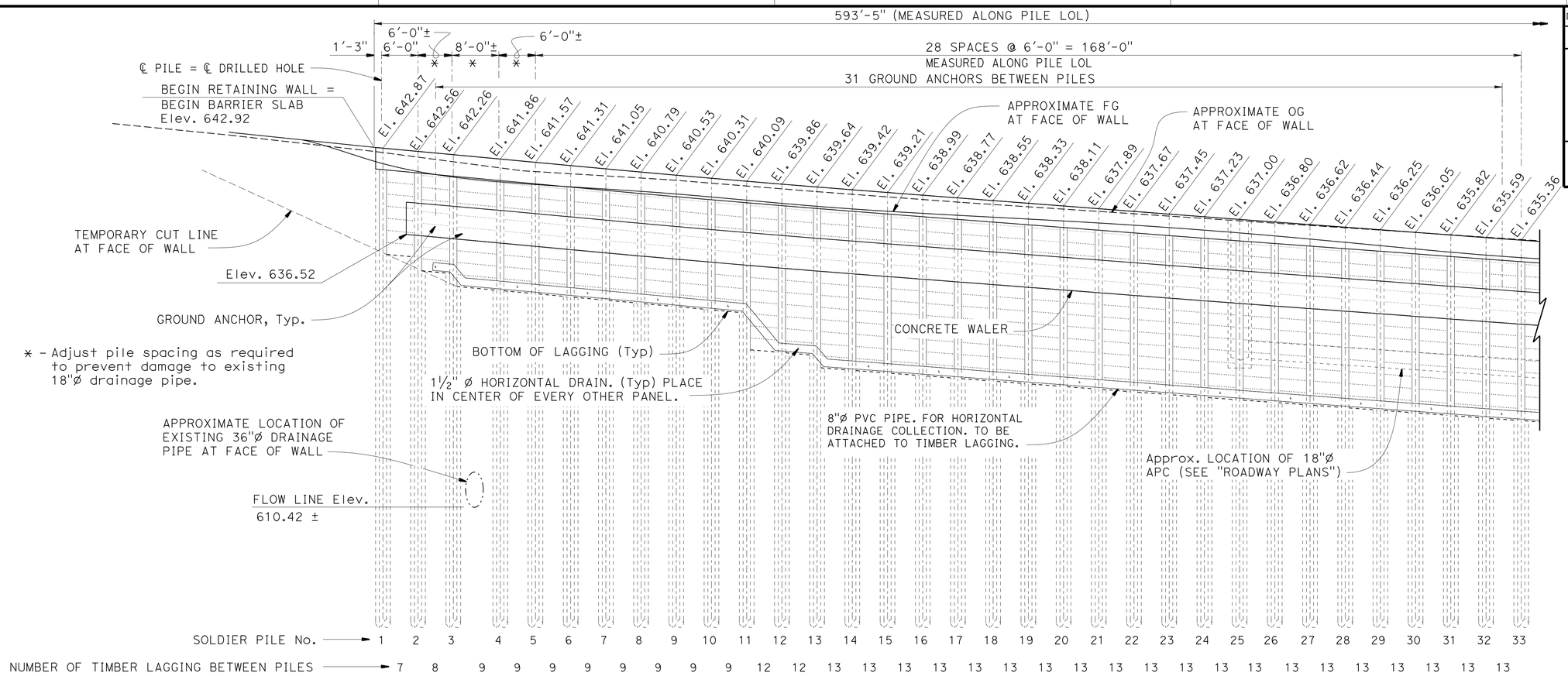

NOTES

1. Concrete Barrier Type 742 not shown for clarity.
2. The top of wall elevations shown are measured at Profile Grade.
3. Contractor shall locate existing 36"Ø Drainage pipe before drilling the hole for CIDH Pile construction.

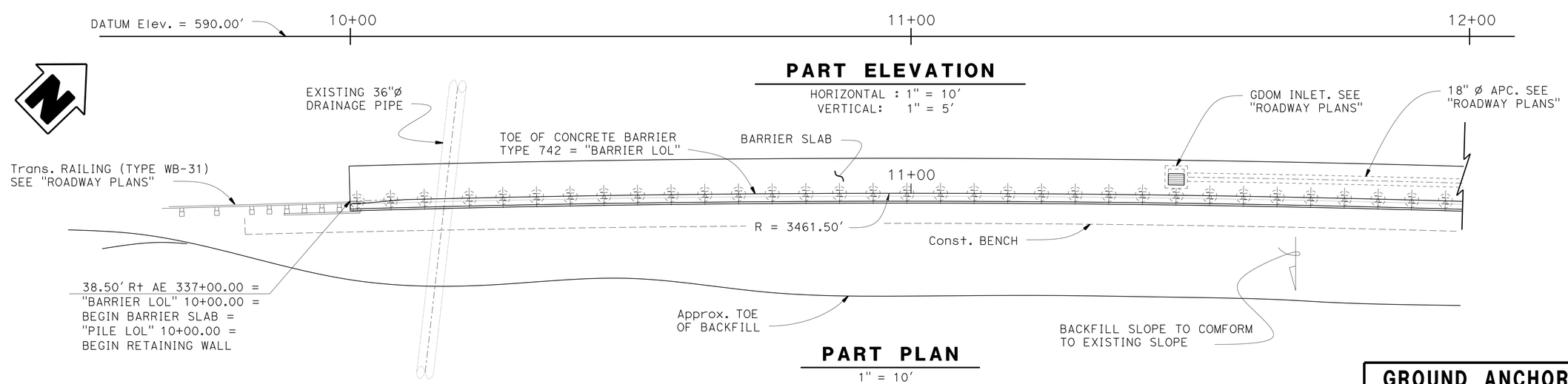

PART ELEVATION

HORIZONTAL : 1" = 10'
VERTICAL: 1" = 5'

PART PLAN

1" = 10'

	BY	CHECKED
DESIGN	Ben Nguyen	Rafael Salazar
DETAILS	Jeff Thorne	Ben Nguyen
QUANTITIES	Ben Nguyen	Linan Wang

STATE OF CALIFORNIA
DEPARTMENT OF TRANSPORTATION

DIVISION OF ENGINEERING SERVICES
STRUCTURE DESIGN
DESIGN BRANCH 4

BRIDGE NO. 33E0404
POST MILE 3.9

GROUND ANCHOR SOLDIER PILE WALL
RETAINING WALL AT P.M. 3.9 (EB 580)
STRUCTURE PLAN NO. 1

STRUCTURES DESIGN DETAIL SHEET (ENGLISH) (REV. 09-01-10)

ORIGINAL SCALE IN INCHES FOR REDUCED PLANS 0 1 2 3

UNIT: 59-3579
PROJECT NUMBER & PHASE: 0412000008 4
CONTRACT NO.: 04-2G8504

DISREGARD PRINTS BEARING EARLIER REVISION DATES

REVISION DATES: 9-18-14 4-8-15 12-8-14 2-2-15

SHEET 3 OF 13

FILE => 33e0404-a-sp01.dgn

USERNAME => s130819 DATE PLOTTED => 09-JUN-2015 TIME PLOTTED => 13:51

DIST	COUNTY	ROUTE	POST MILES TOTAL PROJECT	SHEET No.	TOTAL SHEETS
04	Ala	580	R4.0	49	58

REGISTERED CIVIL ENGINEER 2-25-15 DATE

6-1-15
PLANS APPROVAL DATE

REGISTERED PROFESSIONAL ENGINEER LINAN WANG No. 54714 Exp. 12-31-15 CIVIL STATE OF CALIFORNIA

The State of California or its officers or agents shall not be responsible for the accuracy or completeness of scanned copies of this plan sheet.

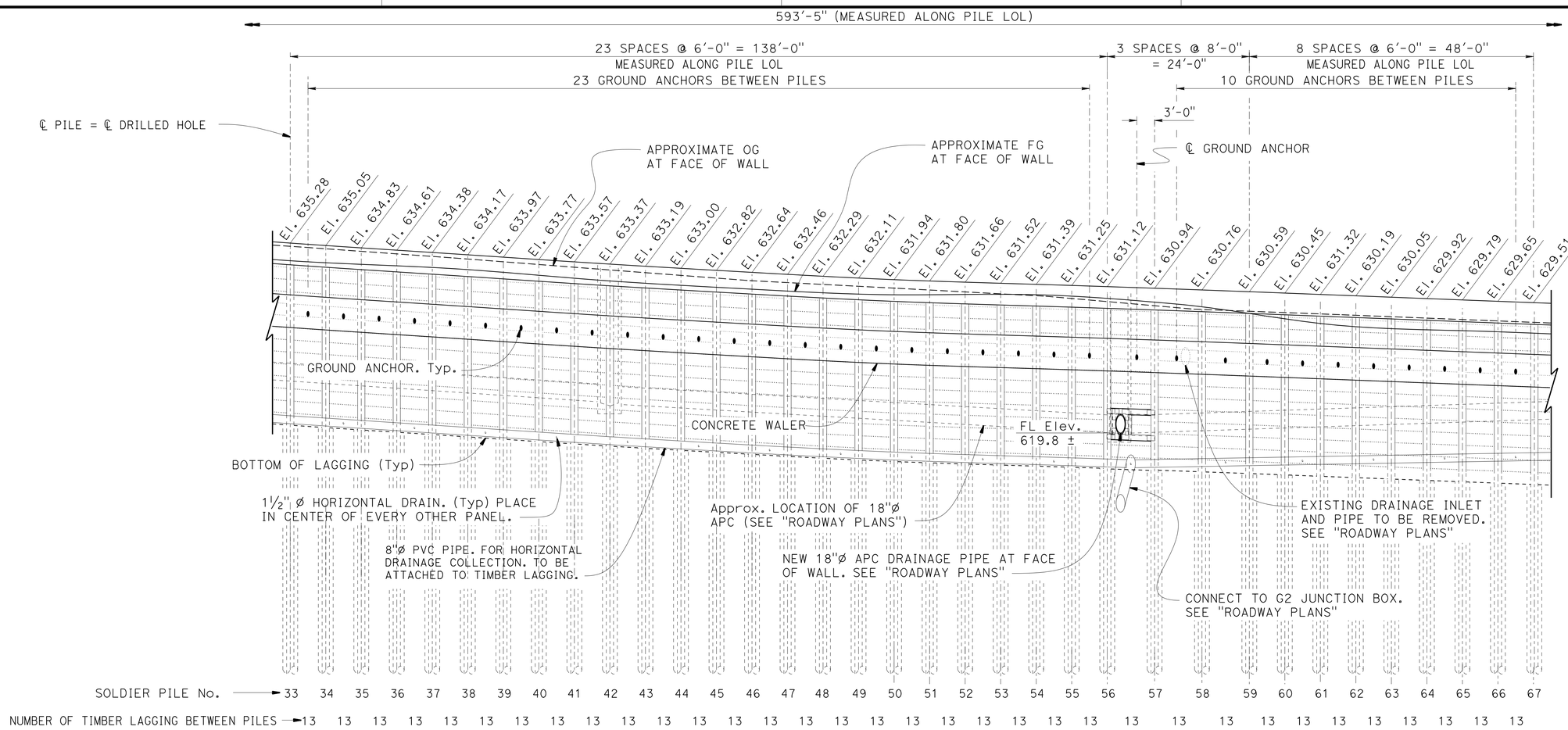

NOTES

1. Concrete Barrier Type 742 not shown for clarity.
2. The top elevations shown are measured at Profile Grade.

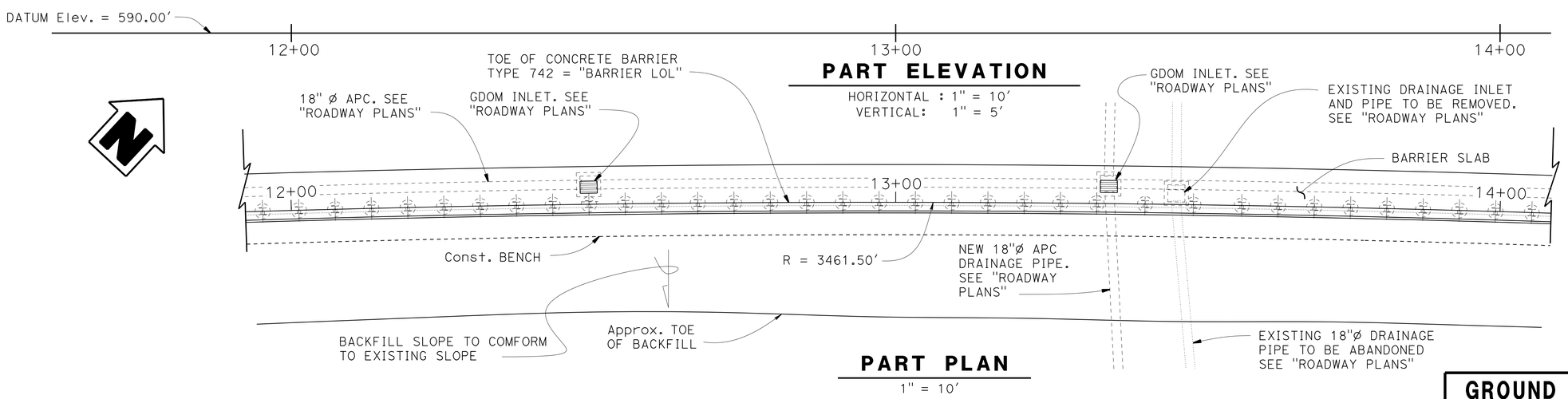

PART ELEVATION

HORIZONTAL : 1" = 10'
VERTICAL: 1" = 5'

PART PLAN

1" = 10'

	BY	CHECKED
DESIGN	Ben Nguyen	Rafael Salazar
DETAILS	Jeff Thorne	Ben Nguyen
QUANTITIES	Ben Nguyen	Linan Wang

STATE OF CALIFORNIA
DEPARTMENT OF TRANSPORTATION

DIVISION OF ENGINEERING SERVICES
STRUCTURE DESIGN
DESIGN BRANCH 4

BRIDGE NO. 33E0404
POST MILE 3.9

GROUND ANCHOR SOLDIER PILE WALL
RETAINING WALL AT P.M. 3.9 (EB 580)
STRUCTURE PLAN NO. 2

STRUCTURES DESIGN DETAIL SHEET (ENGLISH) (REV. 09-01-10)

ORIGINAL SCALE IN INCHES FOR REDUCED PLANS 0 1 2 3

UNIT: 59-3579
PROJECT NUMBER & PHASE: 0412000008 4
CONTRACT NO.: 04-2G8504

DISREGARD PRINTS BEARING EARLIER REVISION DATES

REVISION DATES: 4-29-15 11-18-14 2-4-15 6-8-15

SHEET 4 OF 13

FILE => 33e0404-a-sp02.dgn

USERNAME => s130819 DATE PLOTTED => 09-JUN-2015 TIME PLOTTED => 15:51

DIST	COUNTY	ROUTE	POST MILES TOTAL PROJECT	SHEET No.	TOTAL SHEETS
04	Ala	580	R4.0	50	58

REGISTERED CIVIL ENGINEER 2-25-15 DATE

6-1-15
PLANS APPROVAL DATE

REGISTERED PROFESSIONAL ENGINEER
LINAN WANG
No. 54714
Exp. 12-31-15
CIVIL
STATE OF CALIFORNIA

The State of California or its officers or agents shall not be responsible for the accuracy or completeness of scanned copies of this plan sheet.

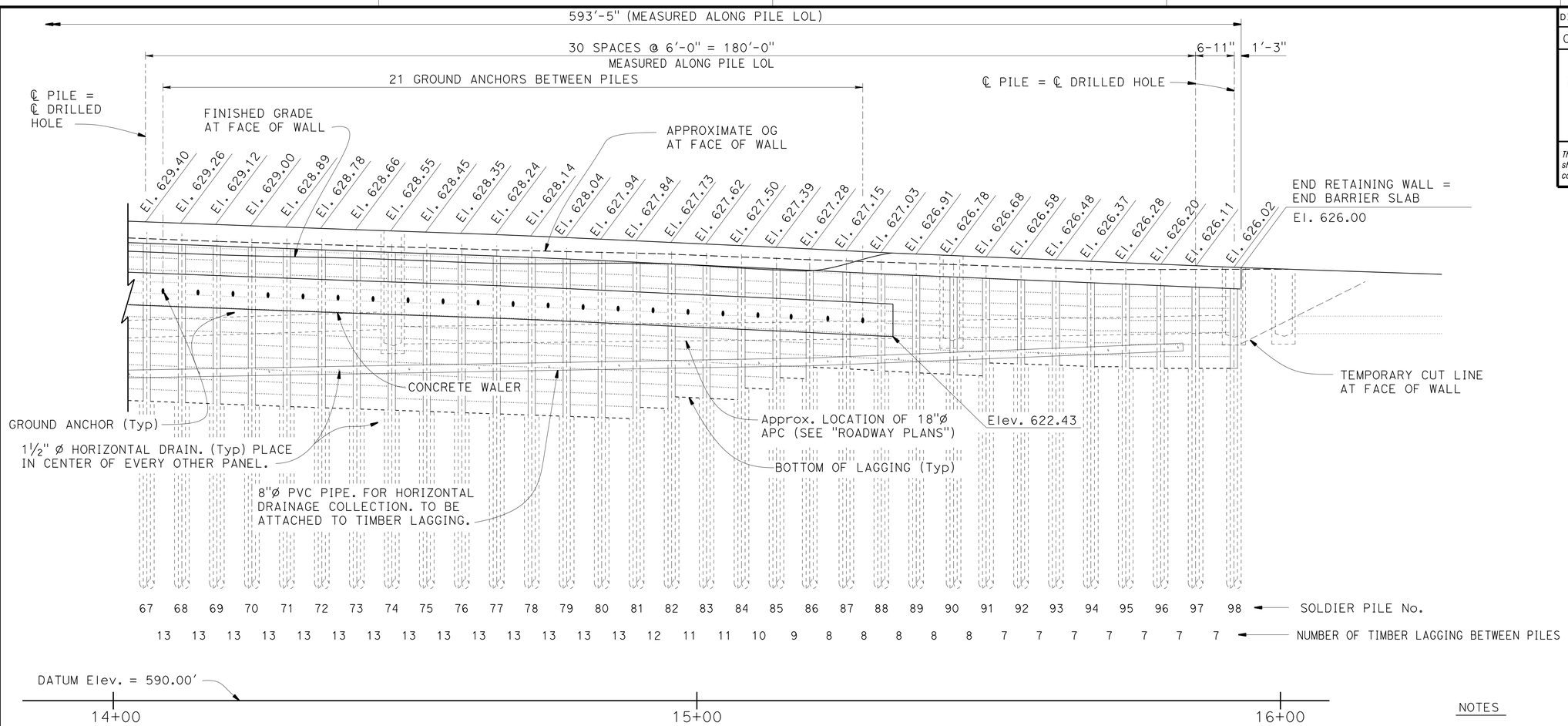

PART ELEVATION

HORIZONTAL : 1" = 10'
VERTICAL: 1" = 5'

NOTES

1. Concrete Barrier Type 742 not shown for clarity.
2. The top of wall elevations shown are measured at Profile Grade.

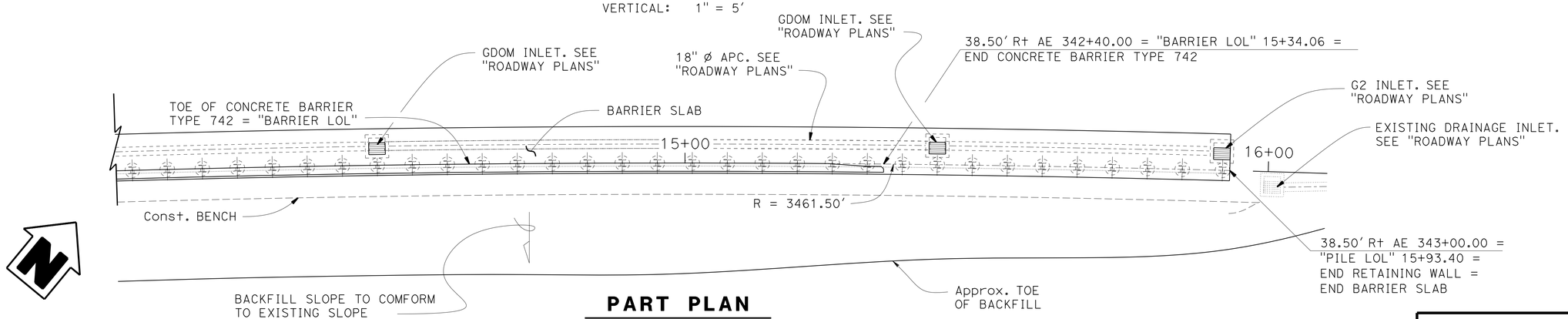

PART PLAN

1" = 10'

DESIGN	BY Ben Nguyen	CHECKED Qi Zhao	
DETAILS	BY Jeff Thorne	CHECKED Qi Zhao	
QUANTITIES	BY X	CHECKED X	

STATE OF CALIFORNIA
DEPARTMENT OF TRANSPORTATION

DIVISION OF ENGINEERING SERVICES
STRUCTURE DESIGN
DESIGN BRANCH 4

BRIDGE NO. 33E0404
POST MILE 3.9

GROUND ANCHOR SOLDIER PILE WALL
RETAINING WALL AT P.M. 3.9 (EB 580)
STRUCTURE PLAN NO. 3

STRUCTURES DESIGN DETAIL SHEET (ENGLISH) (REV. 09-01-10)

ORIGINAL SCALE IN INCHES FOR REDUCED PLANS 0 1 2 3

UNIT: 59-3579
PROJECT NUMBER & PHASE: 0412000008 4
CONTRACT NO.: 04-2G8504

DISREGARD PRINTS BEARING EARLIER REVISION DATES

REVISION DATES: 9-18-14 11-18-14 2-4-15 4-29-15

SHEET 5 OF 13

FILE => 33e0404-a-sp03.dgn

USERNAME => s130819 DATE PLOTTED => 09-JUN-2015 TIME PLOTTED => 15:51

DIST	COUNTY	ROUTE	POST MILES TOTAL PROJECT	SHEET No.	TOTAL SHEETS
04	Ala	580	R4.0	51	58

REGISTERED CIVIL ENGINEER 2-25-15 DATE

6-1-15
PLANS APPROVAL DATE

REGISTERED PROFESSIONAL ENGINEER LINAN WANG No. 54714 Exp. 12-31-15 CIVIL STATE OF CALIFORNIA

The State of California or its officers or agents shall not be responsible for the accuracy or completeness of electronic copies of this plan sheet.

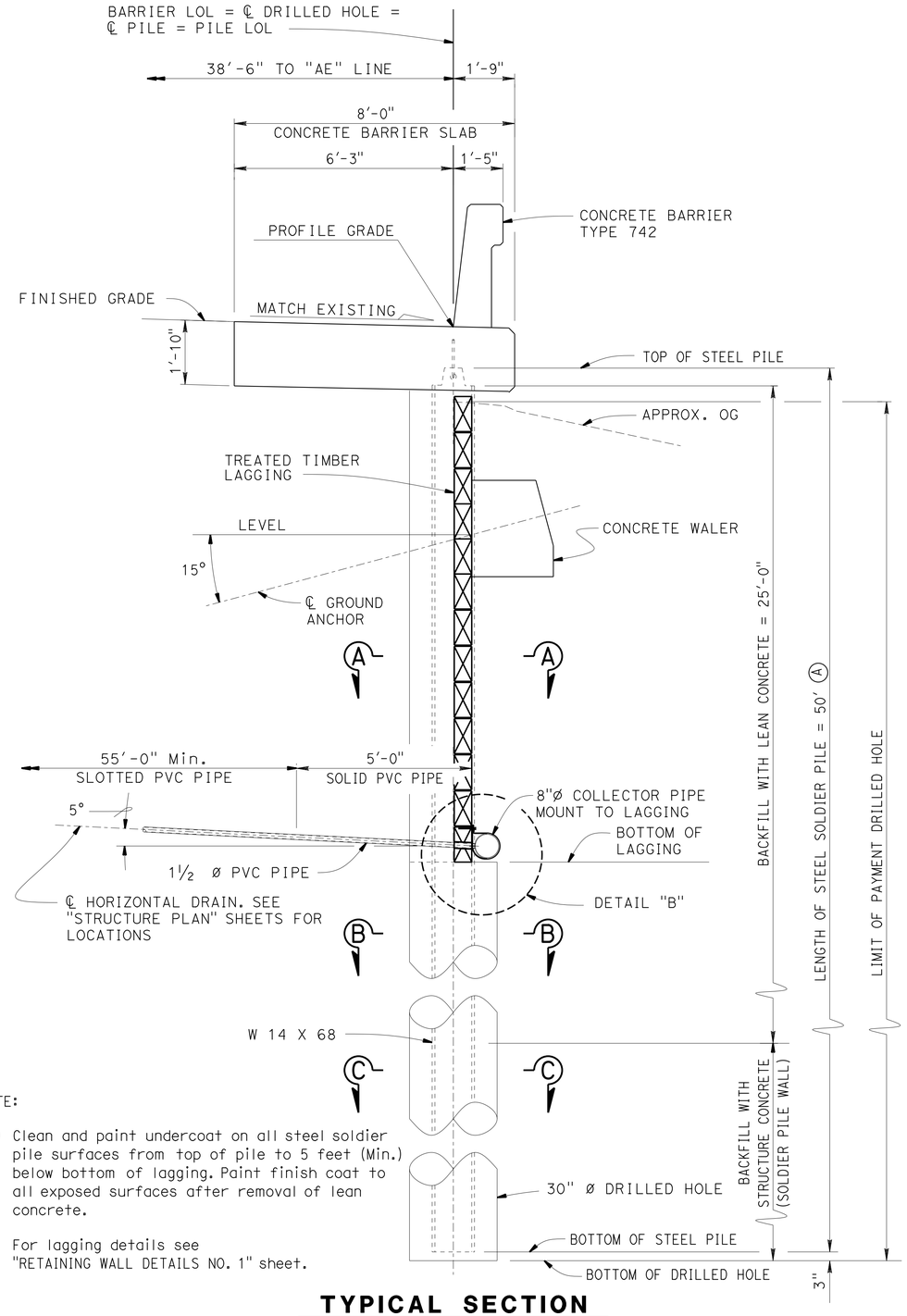

TYPICAL SECTION

½" = 1'-0"

NOTE:

(A) Clean and paint undercoat on all steel soldier pile surfaces from top of pile to 5 feet (Min.) below bottom of lagging. Paint finish coat to all exposed surfaces after removal of lean concrete.

For lagging details see "RETAINING WALL DETAILS NO. 1" sheet.

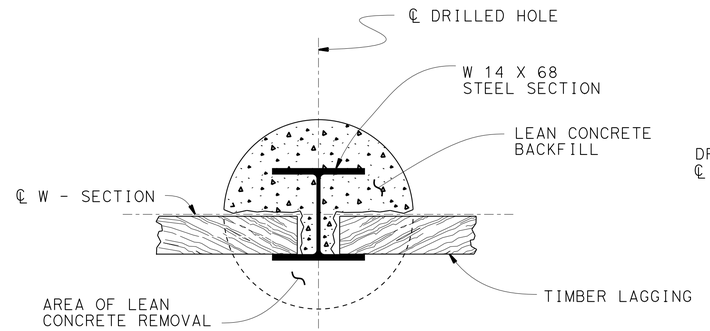

SECTION A-A

1" = 1'-0"

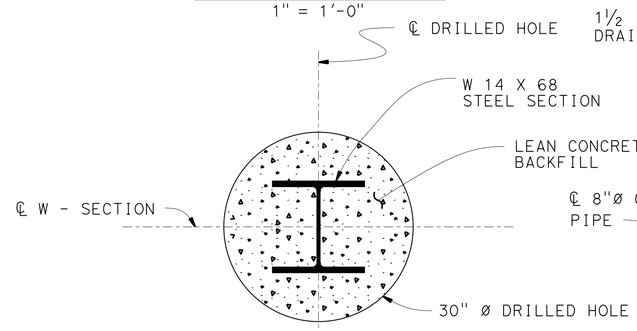

SECTION B-B

1" = 1'-0"

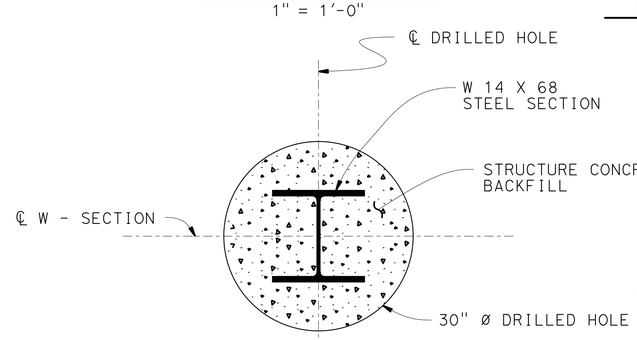

SECTION C-C

1" = 1'-0"

NOTES:

1. Single vee-groove and square groove permitted for all positions
2. Single bevel-groove permitted for horizontal joints only
3. For purposes of non-destructive testing, pile shall be considered a main tension member from top of pile to 5 feet below bottom of lagging. The remaining embedded portion of the pile shall be considered a main compression member.

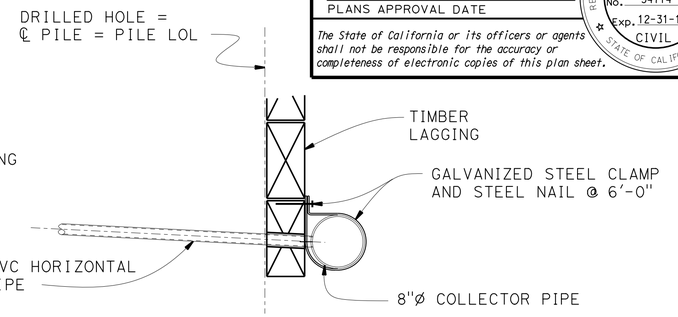

DETAIL "B"

1" = 1'-0"

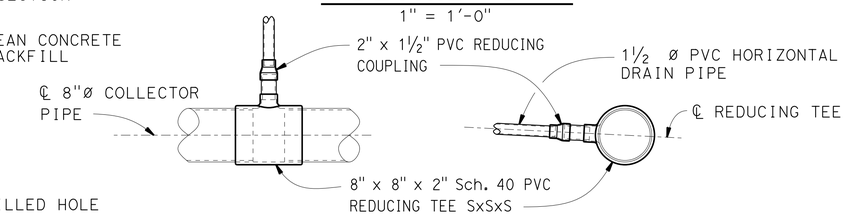

PLAN SECTION

HORIZONTAL DRAIN CONNECTION DETAIL

1" = 1'-0"

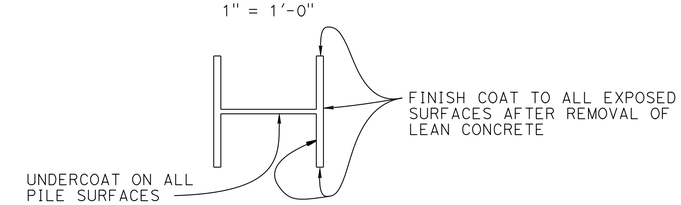

LIMITS OF CLEAN & PAINT STEEL SOLDIER PILE

NO SCALE

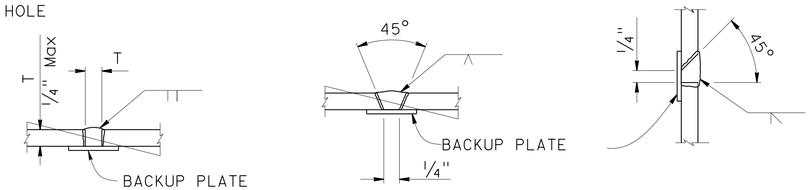

SQUARE GROOVE SINGLE VEE-GROOVE SINGLE BEVEL-GROOVE

PILE WELDING DETAIL-BUTT JOINTS

NO SCALE

DESIGN	BY Ben Nguyen	CHECKED Rafael Salazar	
DETAILS	BY Jeff Thorne	CHECKED Ben Nguyen	
QUANTITIES	BY Ben Nguyen	CHECKED Linan Wang	

STATE OF CALIFORNIA
DEPARTMENT OF TRANSPORTATION

DIVISION OF ENGINEERING SERVICES
STRUCTURE DESIGN
DESIGN BRANCH 4

BRIDGE NO. 33E0404
POST MILE 3.9

GROUND ANCHOR SOLDIER PILE WALL
RETAINING WALL AT P.M. 3.9 (EB 580)
TYPICAL SECTION

STRUCTURES DESIGN DETAIL SHEET (ENGLISH) (REV. 09-01-10)

ORIGINAL SCALE IN INCHES FOR REDUCED PLANS 0 1 2 3

UNIT: 59-3579
PROJECT NUMBER & PHASE: 0412000008 4
CONTRACT NO.: 04-2G8504

DISREGARD PRINTS BEARING EARLIER REVISION DATES

REVISION DATES: 9-18-14 11-18-14 2-4-15 9-9-14

SHEET 6 OF 13

FILE => 33e0404-b-typ.dgn

USERNAME => s130819 DATE PLOTTED => 09-JUN-2015 TIME PLOTTED => 15:51

DIST	COUNTY	ROUTE	POST MILES TOTAL PROJECT	SHEET No.	TOTAL SHEETS
04	Ala	580	R4.0	52	58

REGISTERED CIVIL ENGINEER 2-25-15 DATE

6-1-15
PLANS APPROVAL DATE

REGISTERED PROFESSIONAL ENGINEER LINAN WANG No. 54714 Exp. 12-31-15 CIVIL STATE OF CALIFORNIA

The State of California or its officers or agents shall not be responsible for the accuracy or completeness of electronic copies of this plan sheet.

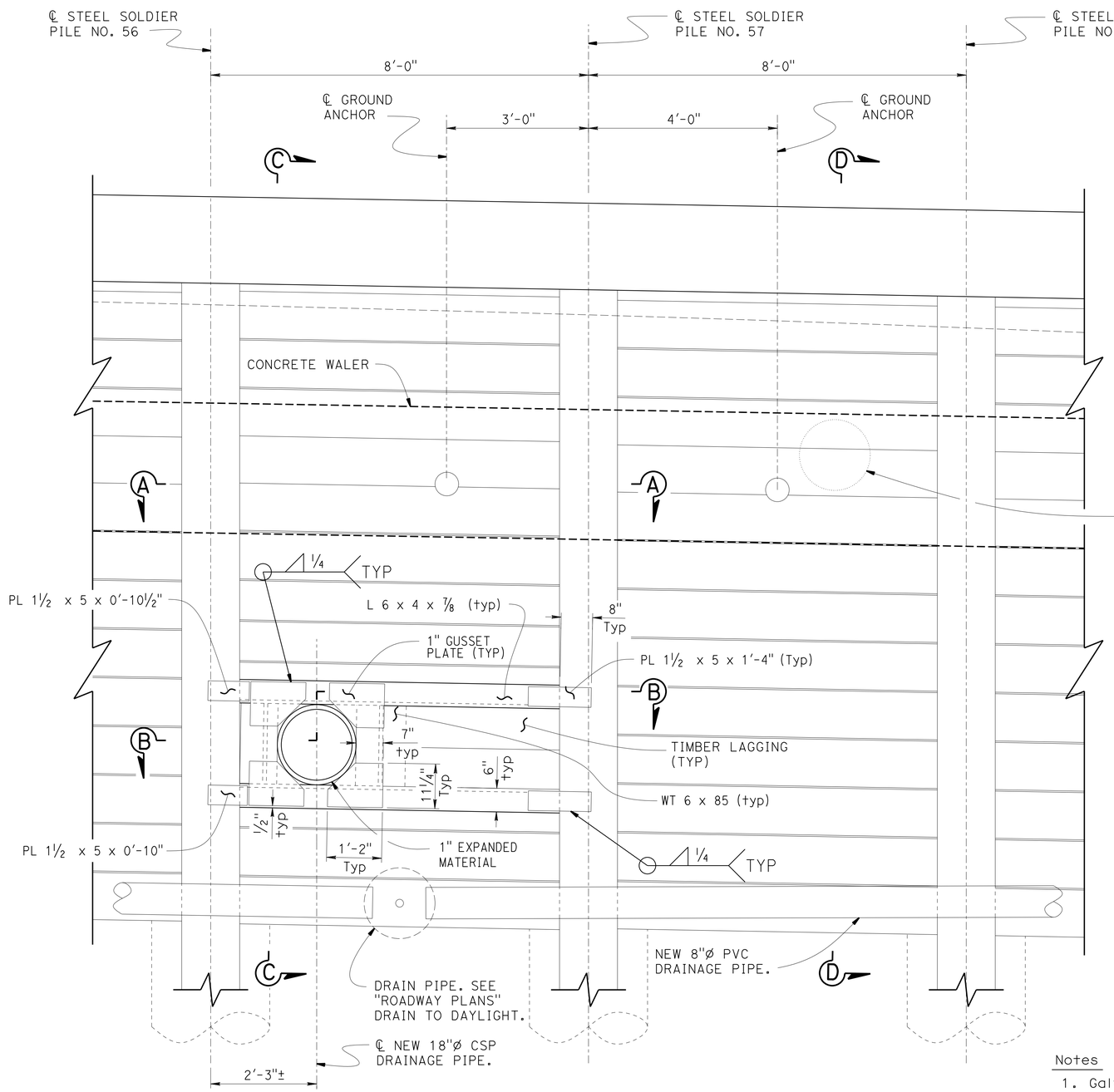

ELEVATION @ 18"DIA. PIPE OPENING

¾" = 1'-0"

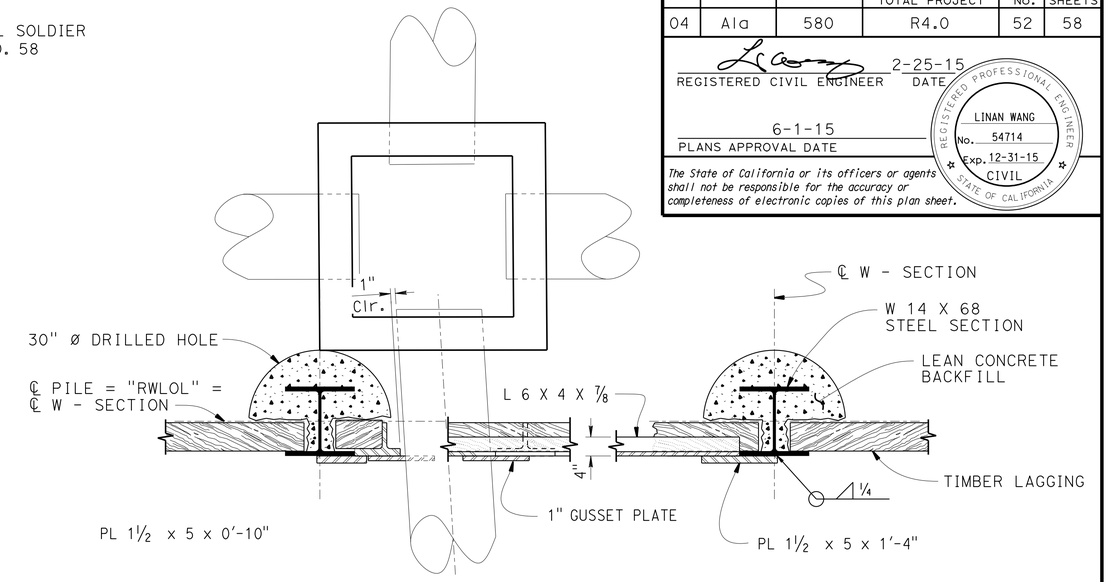

SECTION B-B

¾" = 1'-0"

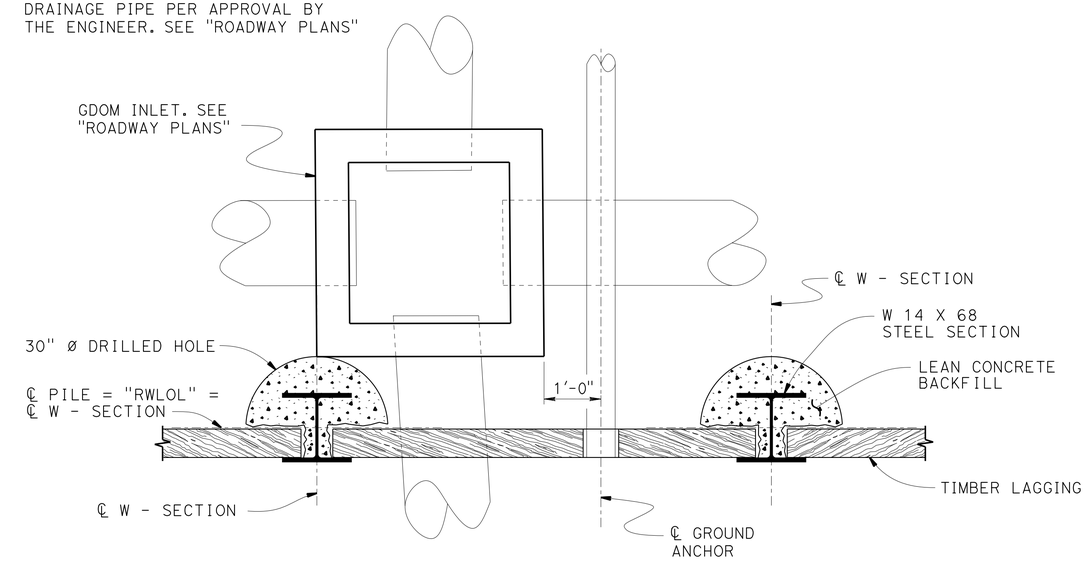

SECTION A-A

¾" = 1'-0"

Notes

1. Galvanize and paint all structure plates, angles and tees.
2. For "SECTION C-C", "SECTION D-D" and details and dimensions not shown, see "MISCELLANEOUS DETAILS NO. 2" sheet.

	BY	CHECKED
DESIGN	Ben Nguyen	Rafael Salazar
DETAILS	Jeff Thorne	Ben Nguyen
QUANTITIES	Ben Nguyen	Linan Wang

STATE OF CALIFORNIA
DEPARTMENT OF TRANSPORTATION

DIVISION OF ENGINEERING SERVICES
STRUCTURE DESIGN
DESIGN BRANCH 4

BRIDGE NO. 33E0404
POST MILE 3.9

GROUND ANCHOR SOLDIER PILE WALL
RETAINING WALL AT P.M. 3.9 (EB 580)
MISCELLANEOUS DETAILS NO. 1

STRUCTURES DESIGN DETAIL SHEET (ENGLISH) (REV. 09-01-10)

ORIGINAL SCALE IN INCHES FOR REDUCED PLANS 0 1 2 3

UNIT: 59-3579
PROJECT NUMBER & PHASE: 0412000008 4
CONTRACT NO.: 04-2G8504

DISREGARD PRINTS BEARING EARLIER REVISION DATES

REVISION DATES: 9-15-14 2-4-15 8-3-14 9-9-14

SHEET 7 OF 13

FILE => 33e0404-c-mscdts01.dgn

USERNAME => s130819 DATE PLOTTED => 09-JUN-2015 TIME PLOTTED => 15:51

DIST	COUNTY	ROUTE	POST MILES TOTAL PROJECT	SHEET No.	TOTAL SHEETS
04	Ala	580	R4.0	53	58

REGISTERED CIVIL ENGINEER 2-25-15 DATE

6-1-15
PLANS APPROVAL DATE

REGISTERED PROFESSIONAL ENGINEER LINAN WANG No. 54714 Exp. 12-31-15 CIVIL STATE OF CALIFORNIA

The State of California or its officers or agents shall not be responsible for the accuracy or completeness of electronic copies of this plan sheet.

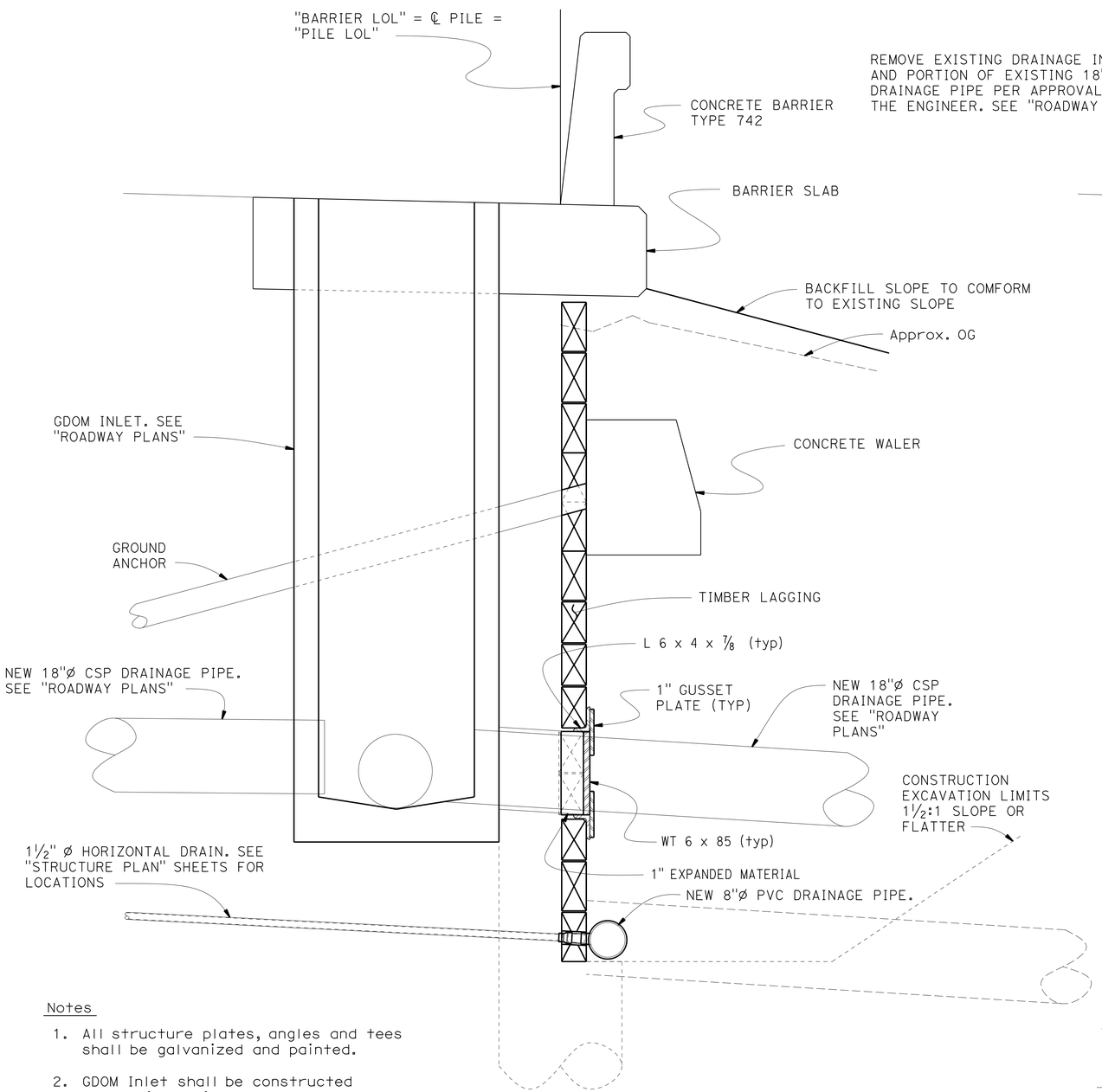

Notes

1. All structure plates, angles and tees shall be galvanized and painted.
2. GDOM Inlet shall be constructed before installing ground anchors.

SECTION C-C

¾" = 1'-0"

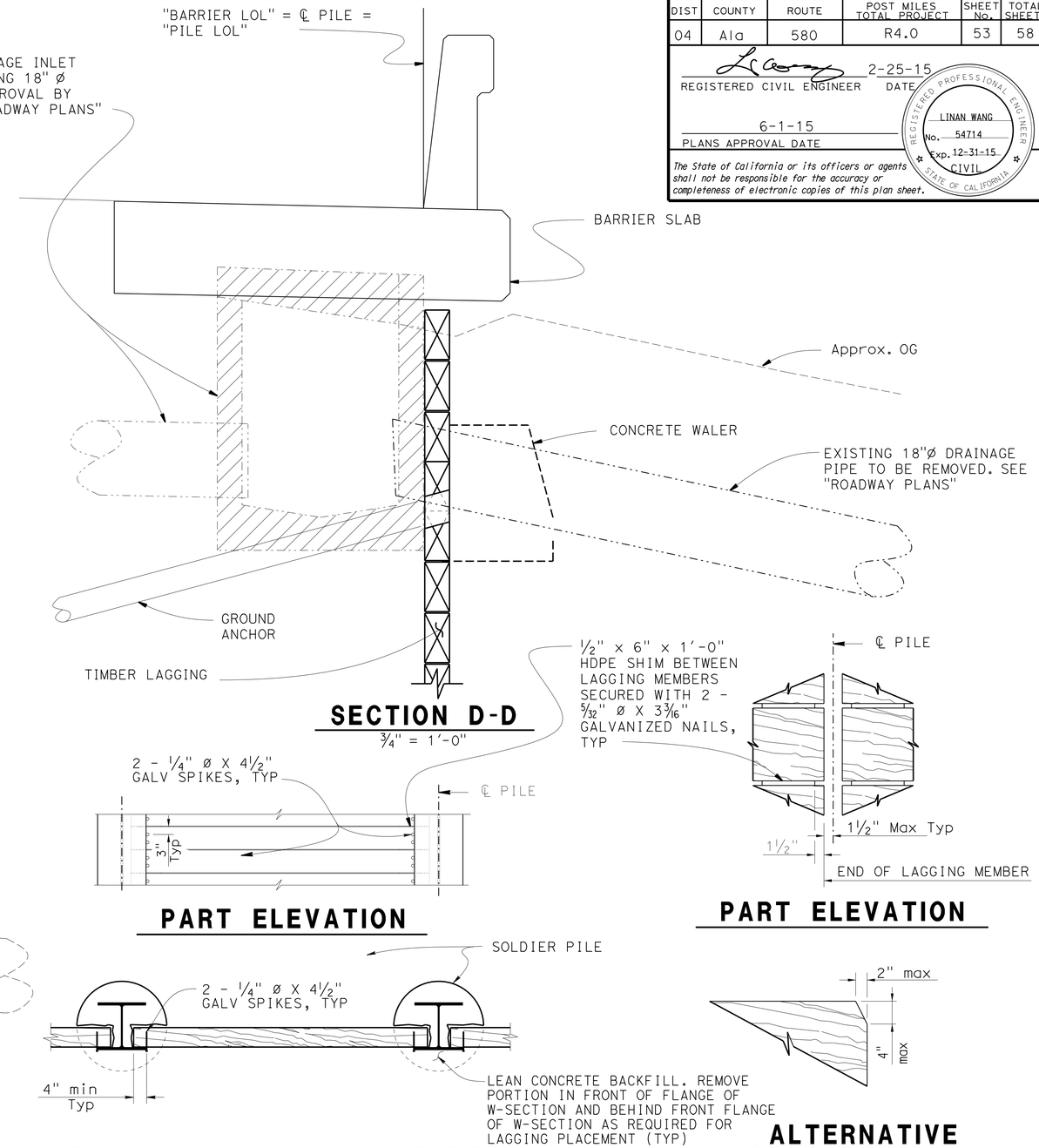

SECTION D-D

¾" = 1'-0"

PART ELEVATION

PART ELEVATION

PART PLAN OF LAGGING MEMBER

ALTERNATIVE INSTALLATION DETAIL

Note:
Diagonally opposite corners may be clipped to facilitate placement

LAGGING DETAILS

No Scale

	BY	CHECKED
DESIGN	Ben Nguyen	Rafael Salazar
DETAILS	Jeff Thorne	Ben Nguyen
QUANTITIES	Ben Nguyen	Linan Wang

STATE OF CALIFORNIA
DEPARTMENT OF TRANSPORTATION

DIVISION OF ENGINEERING SERVICES
STRUCTURE DESIGN
DESIGN BRANCH 4

BRIDGE NO. 33E0404
POST MILE 3.9

GROUND ANCHOR SOLDIER PILE WALL
RETAINING WALL AT P.M. 3.9 (EB 580)
MISCELLANEOUS DETAILS NO. 2

STRUCTURES DESIGN DETAIL SHEET (ENGLISH) (REV. 09-01-10)

ORIGINAL SCALE IN INCHES FOR REDUCED PLANS 0 1 2 3

UNIT: 59-3579
PROJECT NUMBER & PHASE: 0412000008 4
CONTRACT NO.: 04-2G8504

DISREGARD PRINTS BEARING EARLIER REVISION DATES

REVISION DATES: 9-9-14 11-12-14 12-1-14 2-4-15

SHEET 8 OF 13

FILE => 33e0404-c-mscdts02.dgn

USERNAME => s130819 DATE PLOTTED => 09-JUN-2015 TIME PLOTTED => 15:51

DIST	COUNTY	ROUTE	POST MILES TOTAL PROJECT	SHEET No.	TOTAL SHEETS
04	Ala	580	R4.0	54	58

REGISTERED CIVIL ENGINEER 2-25-15 DATE

6-1-15
PLANS APPROVAL DATE

REGISTERED PROFESSIONAL ENGINEER LINAN WANG No. 54714 Exp. 12-31-15 CIVIL STATE OF CALIFORNIA

The State of California or its officers or agents shall not be responsible for the accuracy or completeness of scanned copies of this plan sheet.

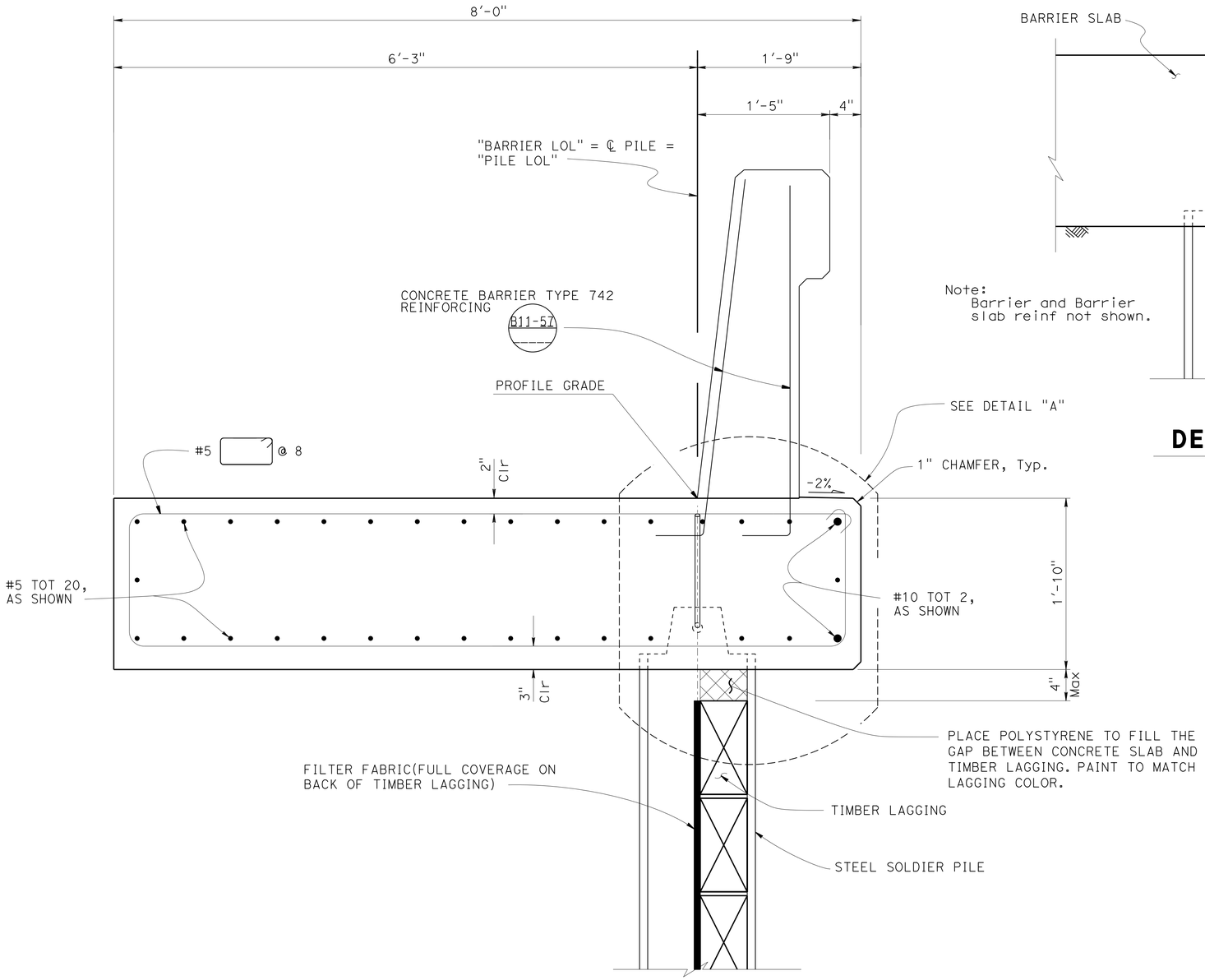

CONCRETE BARRIER SLAB DETAILS

1½" = 1'-0"

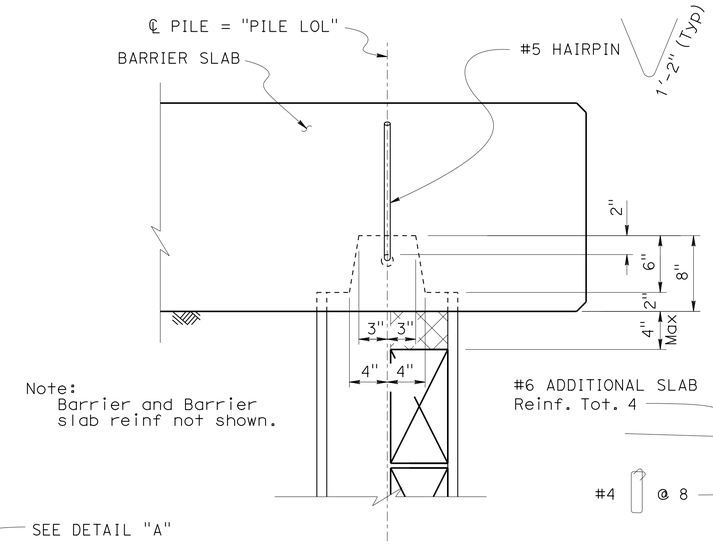

Note:
Barrier and Barrier slab reinf not shown.

DETAIL "A"

1½" = 1'-0"

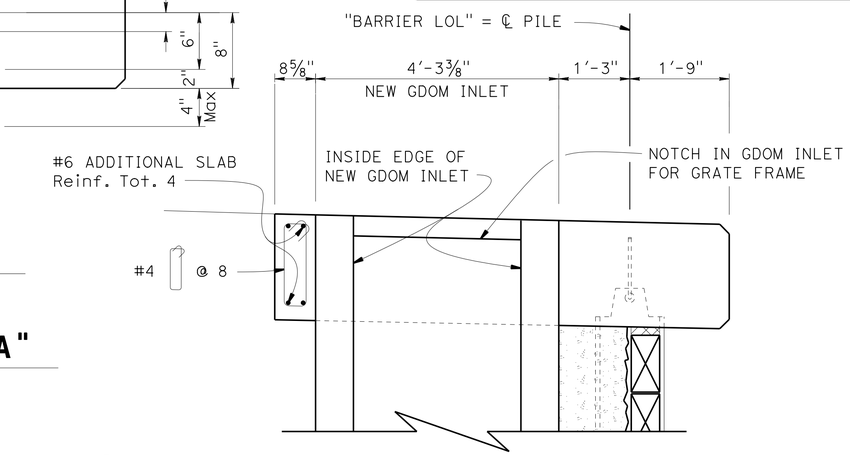

SECTION A-A

¾" = 1'-0"

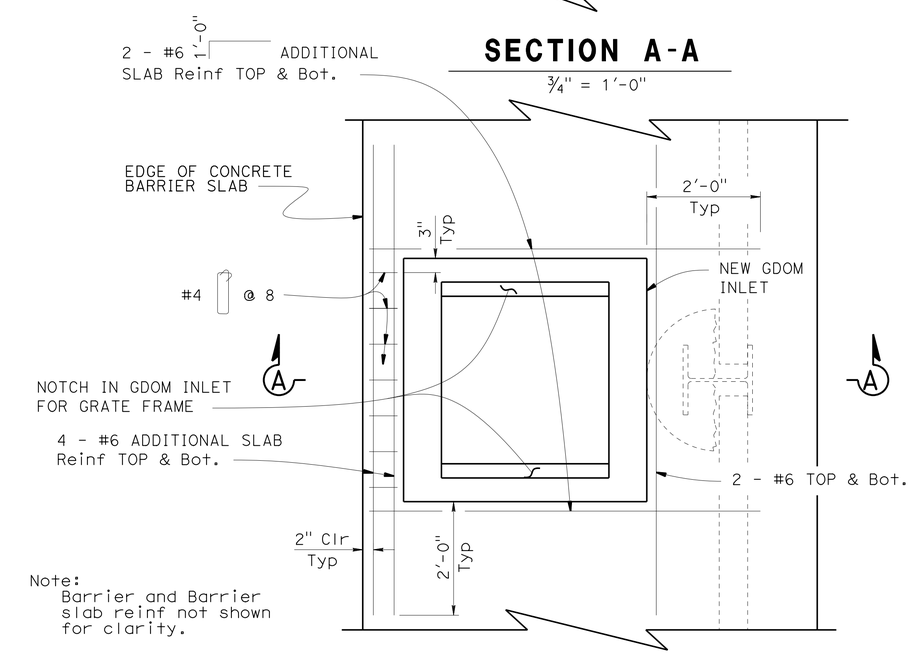

Note:
Barrier and Barrier slab reinf not shown for clarity.

ADDITIONAL BARRIER SLAB REINFORCING AT OPENNING OF GDOM INLET

¾" = 1'-0"

GROUND ANCHOR SOLDIER PILE WALL
RETAINING WALL AT P.M. 3.9 (EB 580)
RETAINING WALL DETAILS NO. 1

	BY	CHECKED
DESIGN	Ben Nguyen	Rafael Salazar
DETAILS	Jeff Thorne	Ben Nguyen
QUANTITIES	Ben Nguyen	Linan Wang

STATE OF CALIFORNIA
DEPARTMENT OF TRANSPORTATION

DIVISION OF ENGINEERING SERVICES
STRUCTURE DESIGN
DESIGN BRANCH 4

BRIDGE NO. 33E0404
POST MILE 3.9

STRUCTURES DESIGN DETAIL SHEET (ENGLISH) (REV. 09-01-10)

ORIGINAL SCALE IN INCHES FOR REDUCED PLANS 0 1 2 3

UNIT: 59-3579
PROJECT NUMBER & PHASE: 0412000008 4
CONTRACT NO.: 04-2g8504

DISREGARD PRINTS BEARING EARLIER REVISION DATES

REVISION DATES 11-12-14 12-2-14 2-4-15 9-18-14

SHEET 9 OF 13

FILE => 33e0404-e-rwdts01.dgn

USERNAME => s130819 DATE PLOTTED => 09-JUN-2015 TIME PLOTTED => 15:51

DIST	COUNTY	ROUTE	POST MILES TOTAL PROJECT	SHEET No.	TOTAL SHEETS
04	Ala	580	R4.0	55	58

REGISTERED CIVIL ENGINEER 2-25-15 DATE

6-1-15
PLANS APPROVAL DATE

REGISTERED PROFESSIONAL ENGINEER LINAN WANG No. 54714 Exp. 12-31-15 CIVIL STATE OF CALIFORNIA

The State of California or its officers or agents shall not be responsible for the accuracy or completeness of scanned copies of this plan sheet.

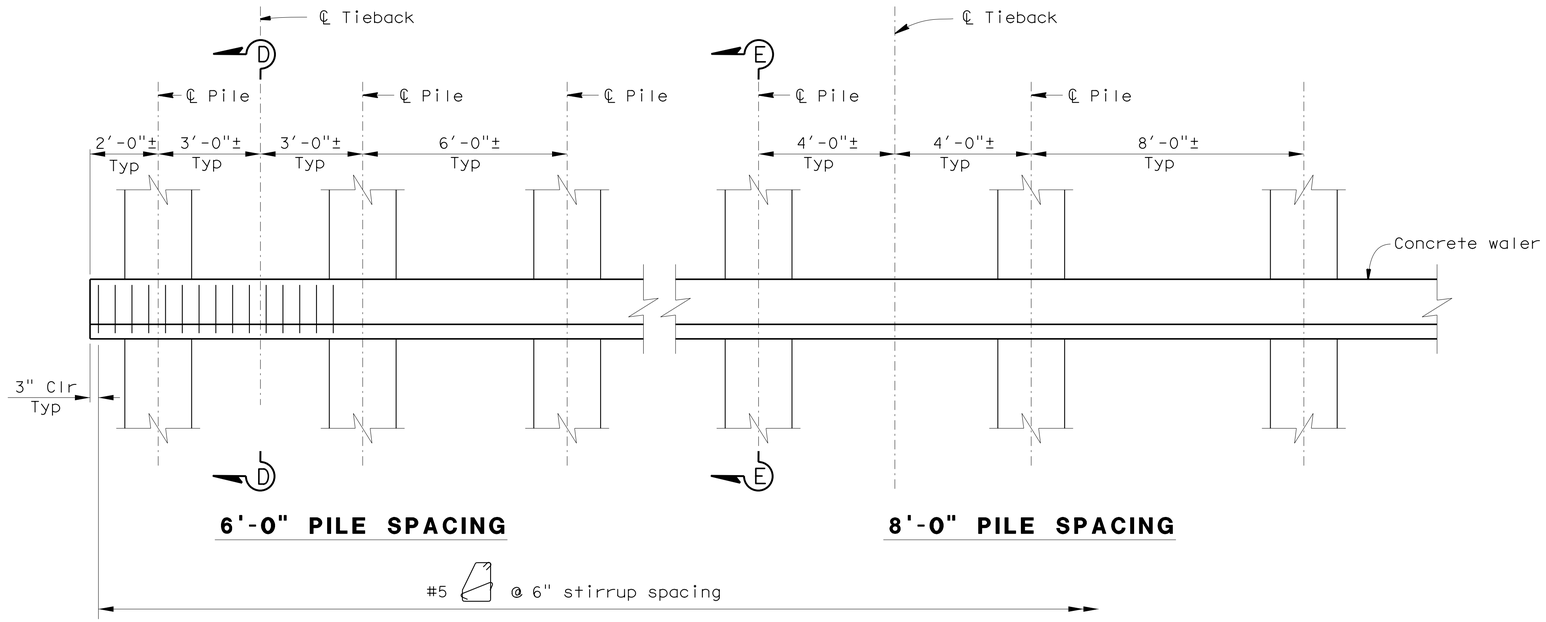

6'-0" PILE SPACING

8'-0" PILE SPACING

PART ELEVATION

No scale

Note: Timber lagging not shown

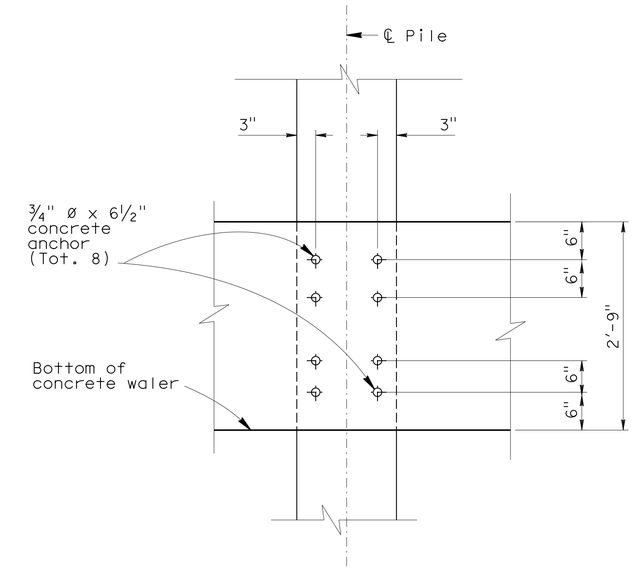

CONCRETE ANCHOR PLACEMENT

No Scale

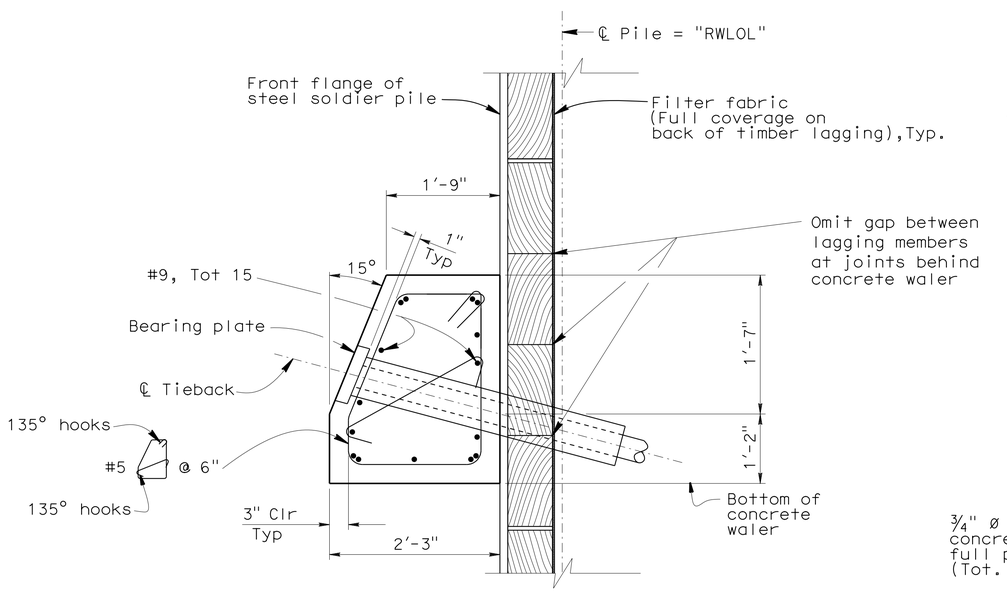

SECTION D-D

No scale

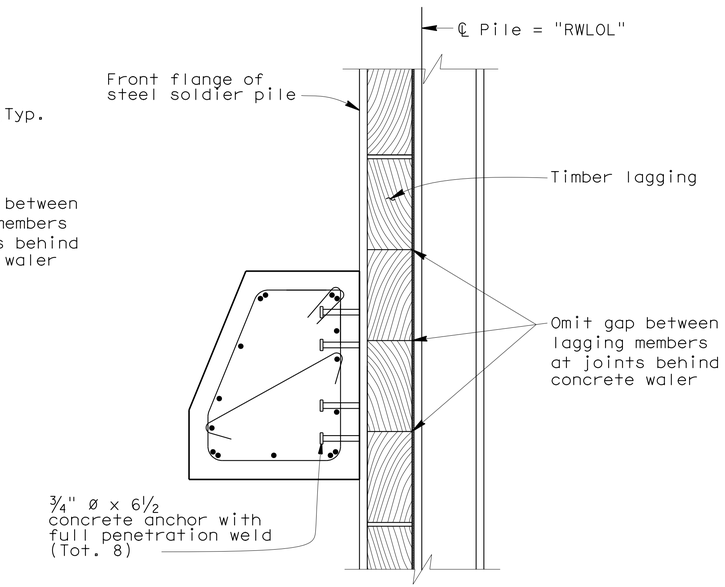

SECTION E-E

No scale

Note: For details and dimensions not shown. See "SECTION D-D"

NOTE:
THE CONTRACTOR SHALL VERIFY ALL CONTROLLING FIELD DIMENSIONS BEFORE ORDERING OR FABRICATING ANY MATERIAL.

NOTES

1. Prepare and stain Concrete Waler
2. Treat the hole surface after cutting the lagging for Ground Anchors.

GROUND ANCHOR SOLDIER PILE WALL

RETAINING WALL AT P.M. 3.9 (EB 580)

RETAINING WALL DETAILS NO. 2

	BY	CHECKED
DESIGN	Ben Nguyen	Rafael Salazar
DETAILS	Jeff Thorne	Ben Nguyen
QUANTITIES	Ben Nguyen	Linan Wang

STATE OF CALIFORNIA
DEPARTMENT OF TRANSPORTATION

DIVISION OF ENGINEERING SERVICES
STRUCTURE DESIGN
DESIGN BRANCH 4

BRIDGE NO. 33E0404
POST MILE 3.9

STRUCTURES DESIGN DETAIL SHEET (ENGLISH) (REV. 09-01-10)

ORIGINAL SCALE IN INCHES FOR REDUCED PLANS 0 1 2 3

UNIT: X
PROJECT NUMBER & PHASE: 0412000008 4
CONTRACT NO.: 04-2G8504

DISREGARD PRINTS BEARING EARLIER REVISION DATES

REVISION DATES: 12-3-14 ~~7-7-14~~ ~~9-8-14~~ ~~9-15-14~~

SHEET 10 OF 13

FILE => 33e0404-g-rwdts02.dgn

USERNAME => s130819 DATE PLOTTED => 09-JUN-2015 TIME PLOTTED => 15:51

DIST	COUNTY	ROUTE	POST MILES TOTAL PROJECT	SHEET No.	TOTAL SHEETS
04	Ala	580	R4.0	56	58

REGISTERED CIVIL ENGINEER 2-25-15 DATE

6-1-15
PLANS APPROVAL DATE

REGISTERED PROFESSIONAL ENGINEER LINAN WANG No. 54714 Exp. 12-31-15 CIVIL STATE OF CALIFORNIA

The State of California or its officers or agents shall not be responsible for the accuracy or completeness of electronic copies of this plan sheet.

GENERAL NOTES

1

PRESTRESSING STEEL:

Bars - ASTM Designation: A722 Type II (150 ksi)

Strand Tendons-ASTM Designation: A416 (270 Ksi Low Relaxation steel)

T = 69 kips (per anchor) 1

fpu = Minimum tensile strength of prestressing steel

As = Minimum cross sectional area of prestressing steel in ground anchor (square inch)

$$As(Min) = \frac{1.3\ T}{0.75\ fpu} \quad \text{(Strands)}$$

$$As(Min) = \frac{1.3\ T}{0.80\ fpu} \quad \text{(Bars)}$$

NOTES:

(A) Level of initial grouting for drill hole 6" in diameter or smaller

(B) Level of secondary grouting

(C) Level of initial grouting inside corrugated sheathing

(D) Bonded length shall be determined by the contractor

2 (E)

(F) For inclination, see PROJECT PLANS

(G) Face of Wall Excavation

NOTES:

1. Anchorage enclosure shall only be used when anchor head assembly is not enclosed in concrete.
2. Anchorage enclosure shall have provisions to allow injecting grout at low end and venting at high end. Galvanize after fabrication.
3. Silicone sealant to cover full width of flange.
4. Steel tube (Min thickness = 1/4") welded to bearing plate. Galvanize assembly after fabrication
5. Steel tube welded to bearing plate. Inside diameter of steel tube (Min thickness = 1/4") to be 1" greater than outside diameter of smooth sheathing.
6. Galvanize assembly after fabrication.
7. For other wall details, see PROJECT PLANS.

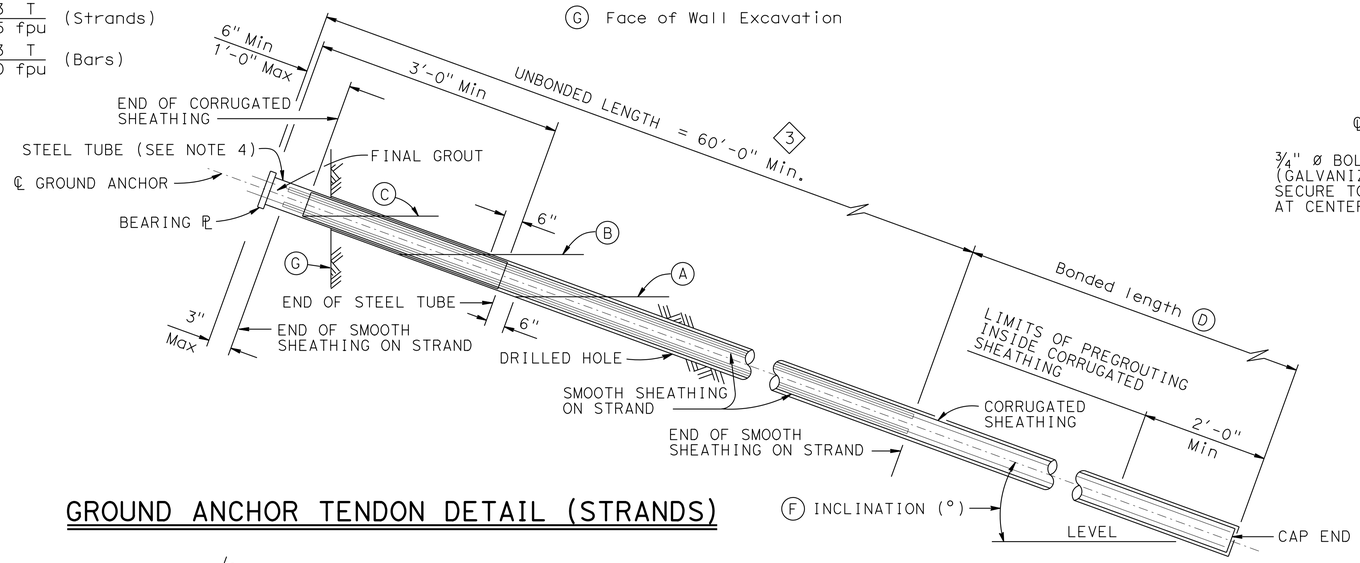

GROUND ANCHOR TENDON DETAIL (STRANDS)

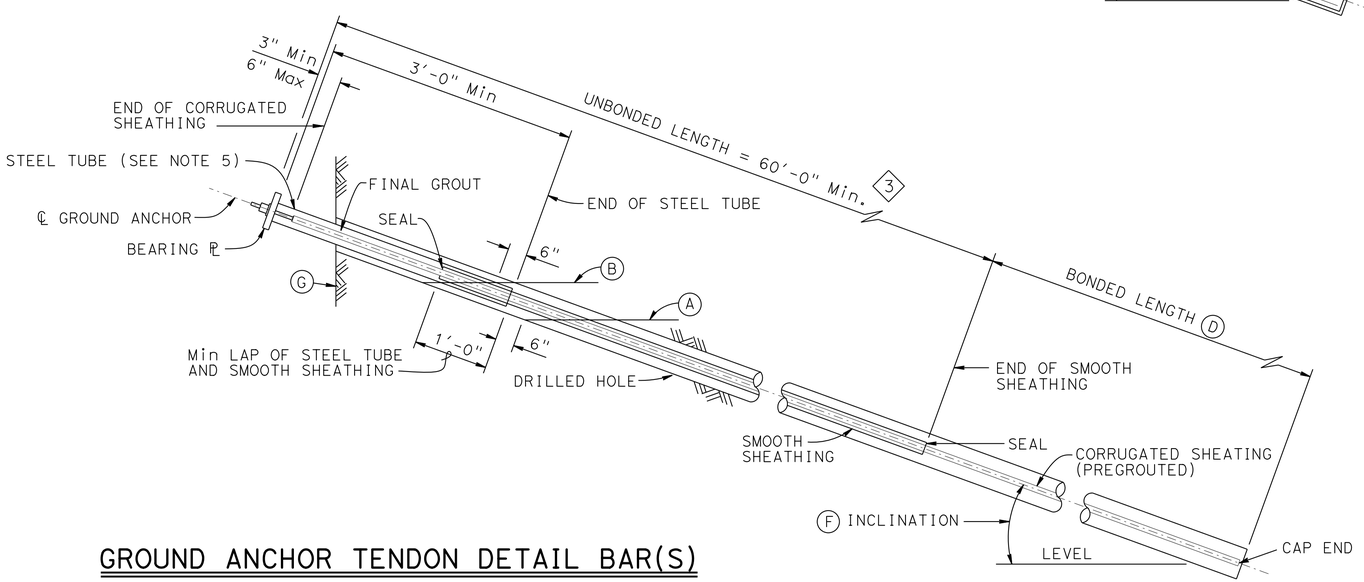

GROUND ANCHOR TENDON DETAIL BAR(S)

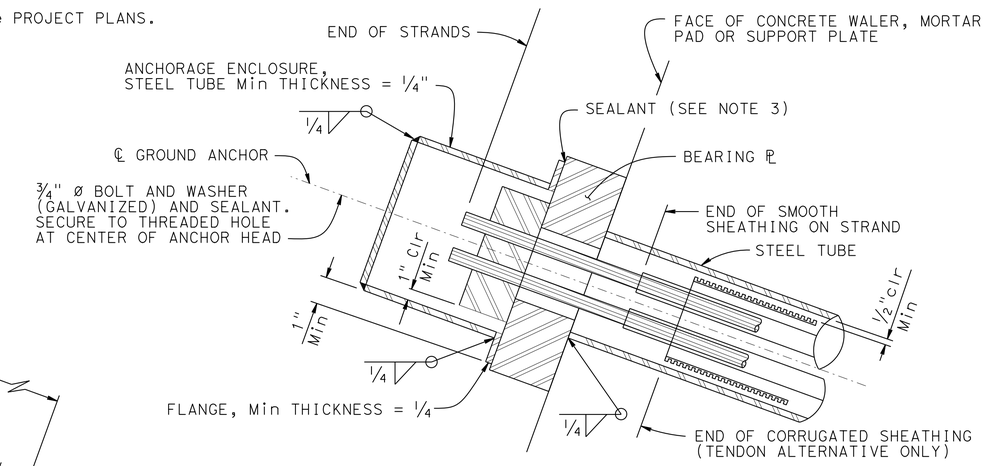

ALTERNATIVE X

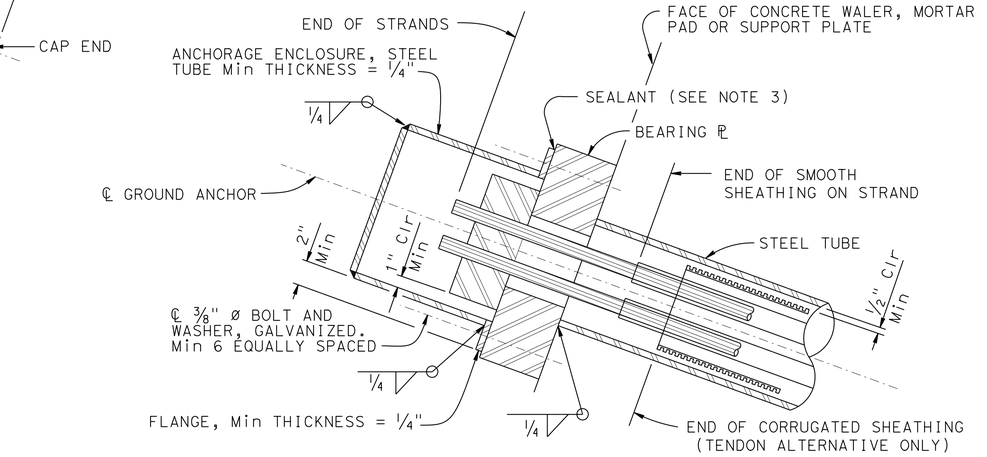

ALTERNATIVE Y

ANCHORAGE ENCLOSURE DETAILS

NO SCALE

REVISED STANDARD DRAWING

FILE NO. xs12-040

APPROVAL DATE July 2011

1 Revised General Notes. 3 Revised dimension.
2 Deleted Note (E)

STATE OF CALIFORNIA DEPARTMENT OF TRANSPORTATION

DIVISION OF ENGINEERING SERVICES

BRIDGE NO. 33E0404
POST MILE 3.9

GROUND ANCHOR SOLDIER PILE WALL
RETAINING WALL AT P.M. 3.9 (EB 580)
SUB HORIZONTAL GROUND ANCHOR DETAILS

DS OSD 2147A (ENGLISH STANDARD DRAWING "XS" BORDER REV. (02-02-11)

ORIGINAL SCALE IN INCHES FOR REDUCED PLANS 0 1 2 3

UNIT: 59-3579
PROJECT NUMBER & PHASE: 0412000008 4
CONTRACT NO.: 04-2G8504

DISREGARD PRINTS BEARING EARLIER REVISION DATES

REVISION DATES 4-14-14 7-7-14 9-8-14 9-15-14

SHEET 11 OF 13

FILE => 33e0404-xs12-040.dgn

USERNAME => s130813 DATE PLOTTED => 09-JUN-2015 TIME PLOTTED => 15:51

DIST	COUNTY	ROUTE	POST MILES TOTAL PROJECT	SHEET No	TOTAL SHEETS
04	Ala	580	R4.0	57	58

REGISTERED CIVIL ENGINEER 02-12-13

6-1-15
PLANS APPROVAL DATE

REGISTERED PROFESSIONAL ENGINEER John C. Moore No. C61792 Exp. 6-30-13 CIVIL STATE OF CALIFORNIA

The State of California or its officers or agents shall not be responsible for the accuracy or completeness of electronic copies of this plan sheet.

This LOTB sheet was prepared in accordance with the Caltrans Soil & Rock Logging, Classification, & Presentation Manual (2010 Edition).

NOTE: 1. The closest BENCH MARK is not within the project limits.

2. PP=unconfined compressive strength (tsf) as measured by pocket penetrometer.

BENCH MARK

CT 265 Elev. 731.99′
N. 2,089,191.585 E. 6,233,142.624
NAV088

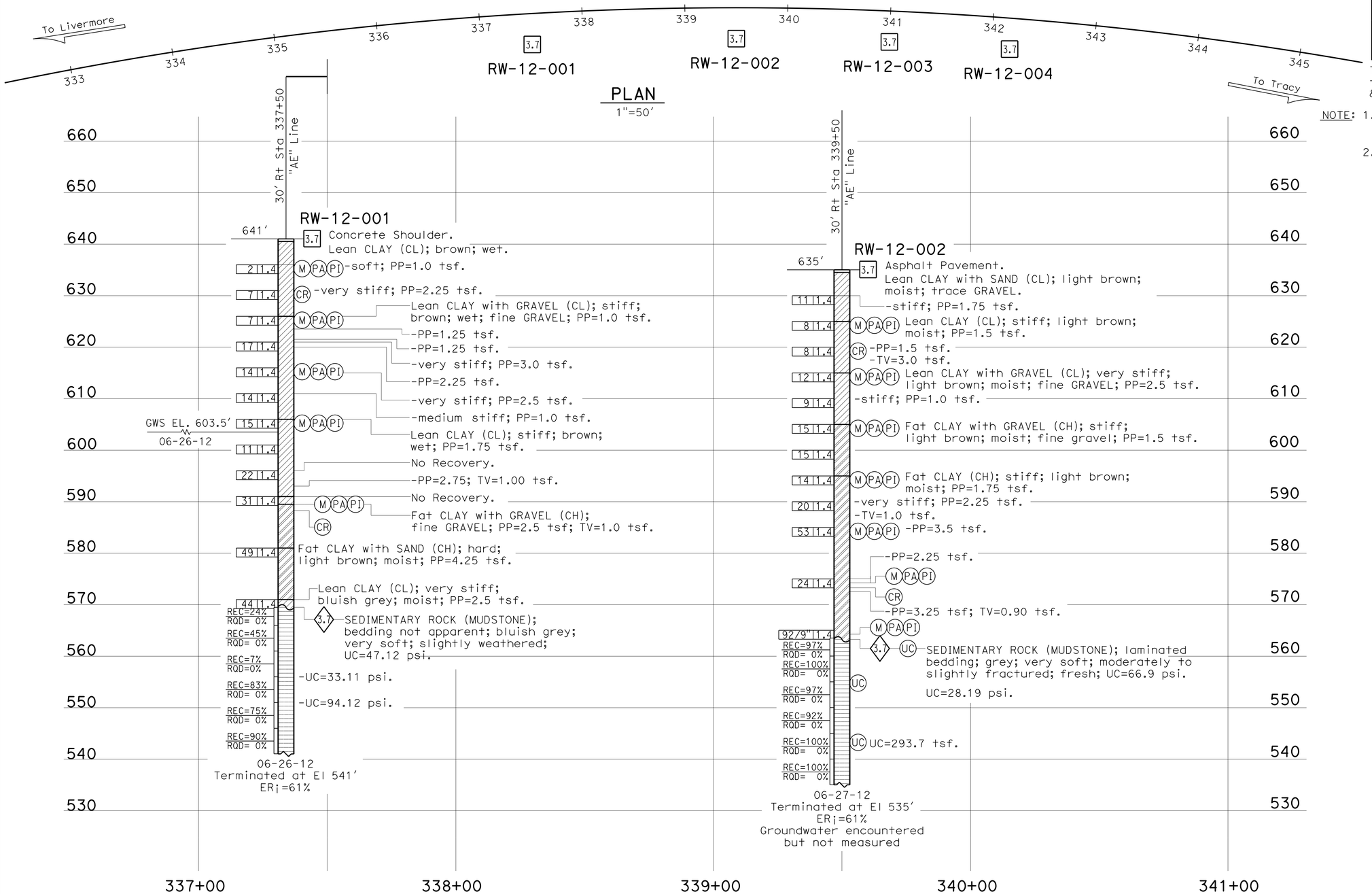

PROFILE

HOR. 1"=20′
VER. 1"=10′

ENGINEERING SERVICES		GEOTECHNICAL SERVICES	STATE OF CALIFORNIA DEPARTMENT OF TRANSPORTATION	DIVISION OF ENGINEERING SERVICES OFFICE OF GEOTECHNICAL DESIGN BRANCH	BRIDGE NO. / POST MILES 3.9	EAST BOUND I-580 RETAINING WALL
FUNCTIONAL SUPERVISOR	DRAWN BY: M. Reynolds 12/12	FIELD INVESTIGATION BY: J. Moore				LOG OF TEST BORINGS 1 OF 2
NAME: M. Momenzadeh	CHECKED BY: D. Nesbitt					

OGS CIVIL LOG OF TEST BORINGS SHEET

ORIGINAL SCALE IN INCHES FOR REDUCED PLANS 0 1 2 3

UNIT: 3660
PROJECT NUMBER & PHASE: 0412000008 4 CONTRACT NO.: 04-2G8504

DISREGARD PRINTS BEARING EARLIER REVISION DATES → 03-25-13

REVISION DATES | SHEET 12 | OF 13

FILE => 33e0404-xx-lotb01.dgn

USERNAME => s130819 DATE PLOTTED => 09-JUN-2015 TIME PLOTTED => 15:51

DIST	COUNTY	ROUTE	POST MILES TOTAL PROJECT	SHEET No	TOTAL SHEETS
04	Ala	580	R4.0	58	58

John C. Moore 02-12-13
REGISTERED CIVIL ENGINEER

6-1-15
PLANS APPROVAL DATE

REGISTERED PROFESSIONAL ENGINEER John C. Moore No. C61792 Exp. 6-30-13 CIVIL STATE OF CALIFORNIA

The State of California or its officers or agents shall not be responsible for the accuracy or completeness of electronic copies of this plan sheet.

This LOTB sheet was prepared in accordance with the Caltrans Soil & Rock Logging, Classification, & Presentation Manual (2010 Edition).

NOTE: 1. The closest BENCH MARK is not within the project limits.

2. PP=unconfined compressive strength (tsf) as measured by pocket penetrometer.

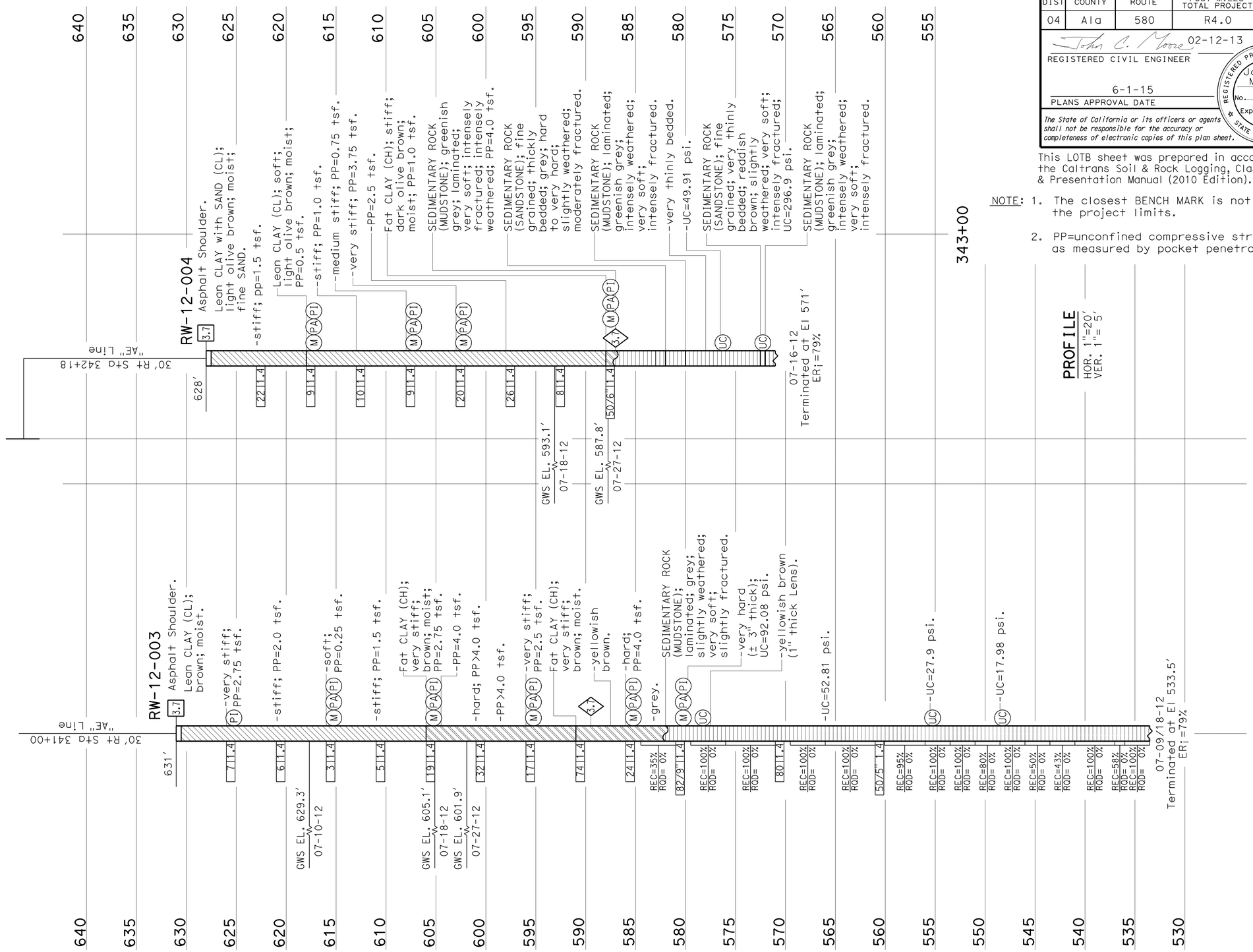

ENGINEERING SERVICES	GEOTECHNICAL SERVICES	STATE OF CALIFORNIA DEPARTMENT OF TRANSPORTATION	DIVISION OF ENGINEERING SERVICES OFFICE OF GEOTECHNICAL DESIGN BRANCH	BRIDGE NO. / POST MILES 3.9	EAST BOUND I-580 RETAINING WALL
FUNCTIONAL SUPERVISOR	DRAWN BY: M. Reynolds 12/12	FIELD INVESTIGATION BY: J. Moore			LOG OF TEST BORINGS 2 OF 2
NAME: M. Momenzadeh	CHECKED BY: D. Nesbitt				

OGS CIVIL LOG OF TEST BORINGS SHEET

ORIGINAL SCALE IN INCHES FOR REDUCED PLANS 0 1 2 3

UNIT: 3660
PROJECT NUMBER & PHASE: 0412000008 4 CONTRACT NO.: 04-2G8504

DISREGARD PRINTS BEARING EARLIER REVISION DATES → 03-25-13

REVISION DATES | SHEET 13 OF 13

FILE => 33e0404-xx-lotb02.dgn

USERNAME => s130819 DATE PLOTTED => 09-JUN-2015 TIME PLOTTED => 15:51