Dist	COUNTY	ROUTE	POST MILES TOTAL PROJECT	SHEET No.	TOTAL SHEETS
04	Ala, SCl	85, 101, 880	Var	1	42

STATE OF CALIFORNIA

DEPARTMENT OF TRANSPORTATION

PROJECT PLANS FOR CONSTRUCTION ON

STATE HIGHWAY

IN SANTA CLARA AND ALAMEDA COUNTIES

AT VARIOUS LOCATIONS

TO BE SUPPLEMENTED BY STANDARD PLANS DATED MAY 2006

INDEX OF PLANS

SHEET No.	DESCRIPTION
1	TITLE AND LOCATION MAP
2 & 3	TYPICAL CROSS SECTIONS
4-6	LAYOUTS
7-9	STAGE CONSTRUCTION AND TRAFFIC HANDLING PLAN
10-17	SIGN PLANS AND CONSTRUCTION AREA SIGN, DETAILS AND QUANTITIES
18	SUMMARY OF QUANTITIES
19-21	ELECTRICAL PLANS
22-24	LOG OF TEST BORING
25-42	NEW AND REVISED STANDARD PLANS

THE STANDARD PLANS LIST APPLICABLE TO THIS CONTRACT IS INCLUDED IN THE NOTICE TO BIDDERS AND SPECIAL PROVISIONS BOOK.

LOCATIONS OF CONSTRUCTION

No. (X)	COUNTY	ROUTE	POST MILE	DESCRIPTION
1	SCl	101	44.0	LAWRENCE Exp SB OFF-RAMP
2	SCl	85	19.9	FREMONT Ave SB OFF-RAMP
3	Ala	880	20.8	WASHINGTON Ave NB OFF-RAMP

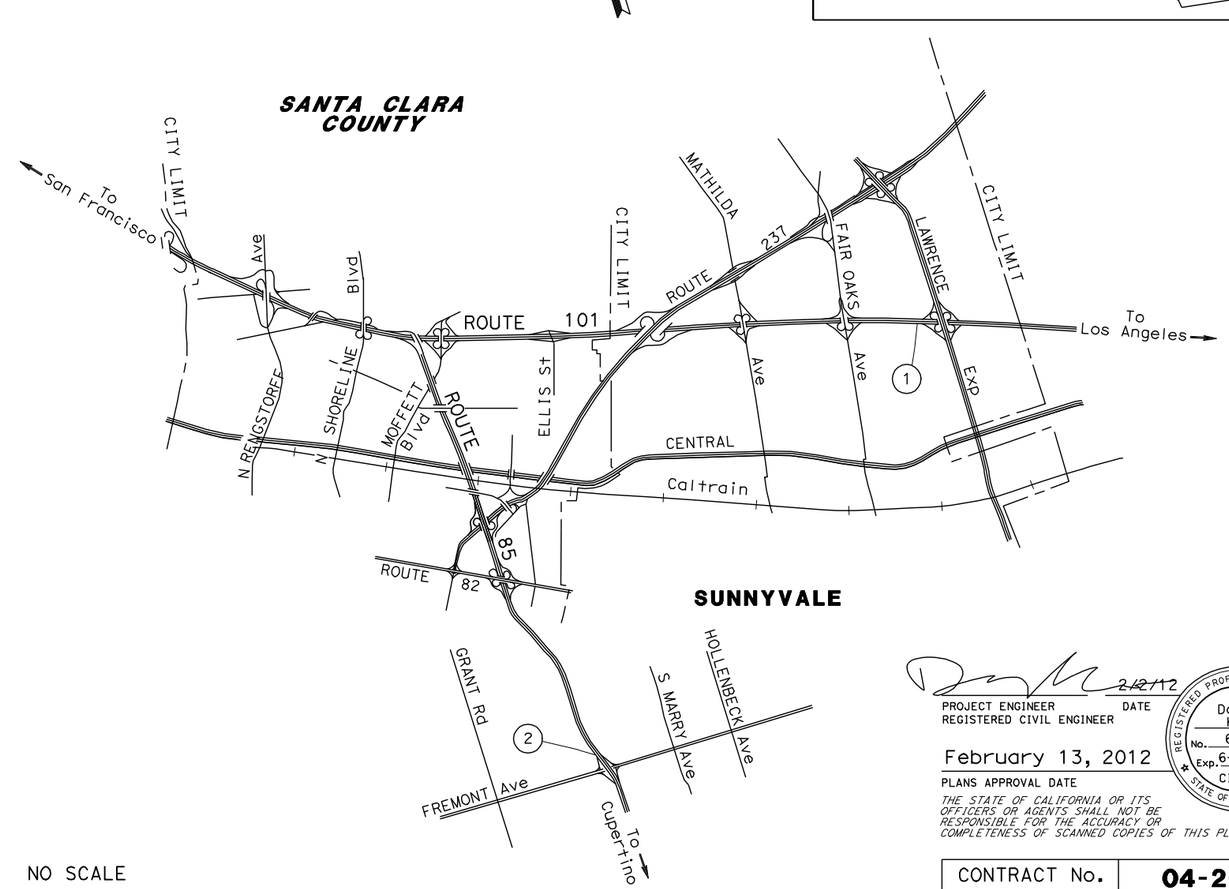

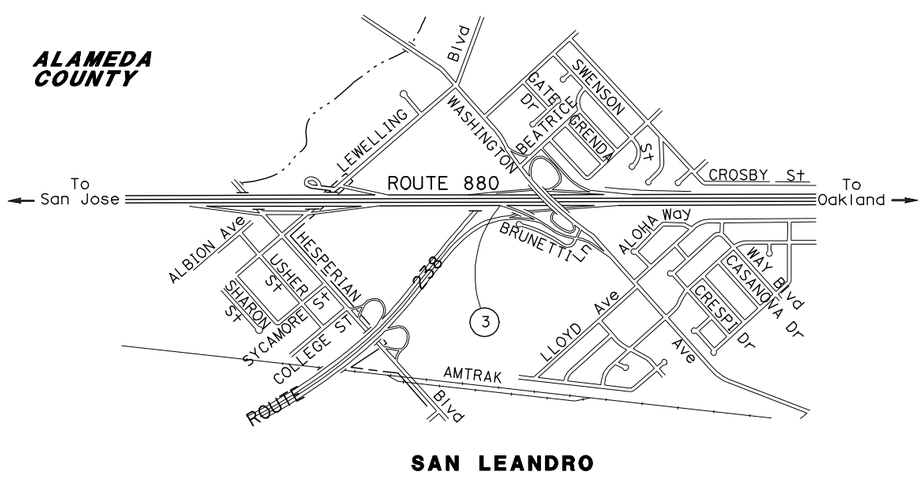

NO SCALE

THE CONTRACTOR SHALL POSSESS THE CLASS (OR CLASSES) OF LICENSE AS SPECIFIED IN THE "NOTICE TO BIDDERS."

PROJECT ENGINEER DATE
REGISTERED CIVIL ENGINEER

2/12/12

February 13, 2012
PLANS APPROVAL DATE

REGISTERED PROFESSIONAL ENGINEER Danny Kao No. 61646 Exp. 6-30-12 CIVIL STATE OF CALIFORNIA

THE STATE OF CALIFORNIA OR ITS OFFICERS OR AGENTS SHALL NOT BE RESPONSIBLE FOR THE ACCURACY OR COMPLETENESS OF SCANNED COPIES OF THIS PLAN SHEET.

CONTRACT No.	04-2G5904
PROJECT ID	0412000003

PROJECT MANAGER: RAMSES SARGISS
DESIGN ENGINEER: DANNY KAO

LAST REVISION 02-01-12
DATE PLOTTED => 16-FEB-2012
TIME PLOTTED => 09:21

Dist	COUNTY	ROUTE	POST MILES TOTAL PROJECT	SHEET No.	TOTAL SHEETS
04	Ala, SCl	85,101, 880	Var	2	42

REGISTERED CIVIL ENGINEER DATE 2/2/12

2-13-12
PLANS APPROVAL DATE

REGISTERED PROFESSIONAL ENGINEER Danny Kao No. 61646 Exp. 6-30-12 CIVIL STATE OF CALIFORNIA

THE STATE OF CALIFORNIA OR ITS OFFICERS OR AGENTS SHALL NOT BE RESPONSIBLE FOR THE ACCURACY OR COMPLETENESS OF SCANNED COPIES OF THIS PLAN SHEET.

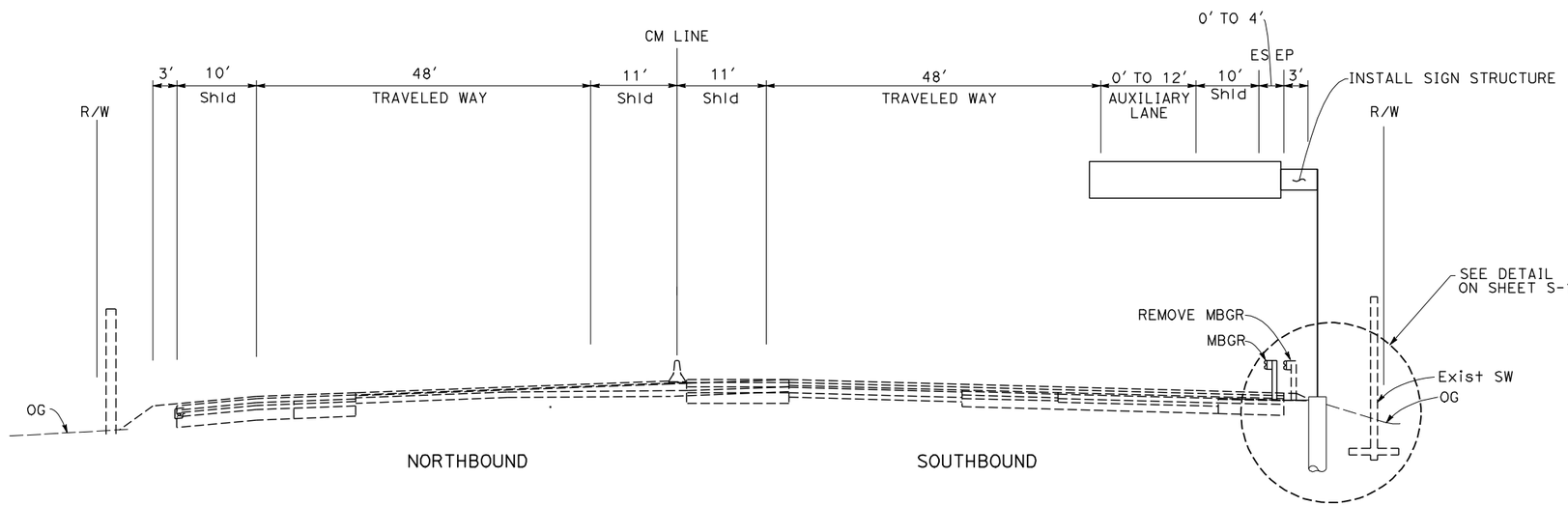

ROUTE 101
AT LAWRENCE EXPRESSWAY OFF-RAMP
CM 455+00 TO 460+00

TYPICAL CROSS SECTIONS
NO SCALE

X-1

N. NGO	REVISED BY
D. KAO	DATE REVISED
N N	
2/1/12	
CALCULATED-DESIGNED BY	
CHECKED BY	
FUNCTIONAL SUPERVISOR	
EDMUND CHOY	

STATE OF CALIFORNIA - DEPARTMENT OF TRANSPORTATION
Caltrans
DESIGN

LAST REVISION 02-02-12 DATE PLOTTED => 16-FEB-2012 TIME PLOTTED => 09:21

Dist	COUNTY	ROUTE	POST MILES TOTAL PROJECT	SHEET No.	TOTAL SHEETS
04	Ala, SCl	85,101, 880	Var	3	42

REGISTERED CIVIL ENGINEER DATE 2/13/12

2-13-12
PLANS APPROVAL DATE

REGISTERED PROFESSIONAL ENGINEER Danny Kao No. 61646 Exp. 6-30-12 CIVIL STATE OF CALIFORNIA

THE STATE OF CALIFORNIA OR ITS OFFICERS OR AGENTS SHALL NOT BE RESPONSIBLE FOR THE ACCURACY OR COMPLETENESS OF SCANNED COPIES OF THIS PLAN SHEET.

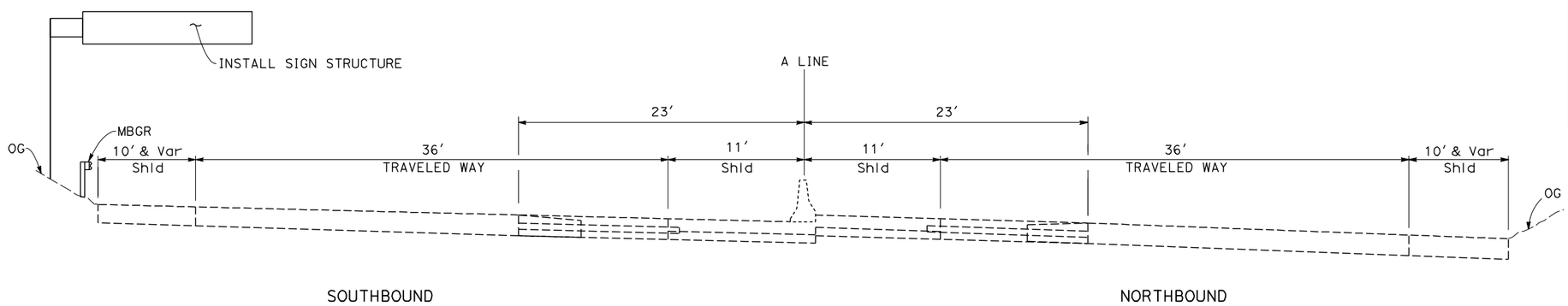

ROUTE 85
AT FREMONT Ave OFF-RAMP
A 528+50 TO 541+50

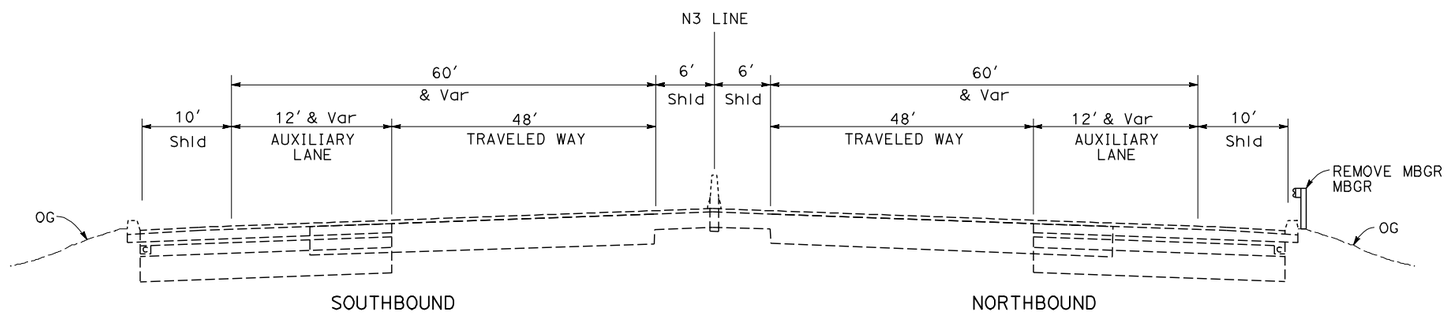

ROUTE 880
AT WASHINGTON Ave OFF-RAMP
N3 210+00 TO 213+25

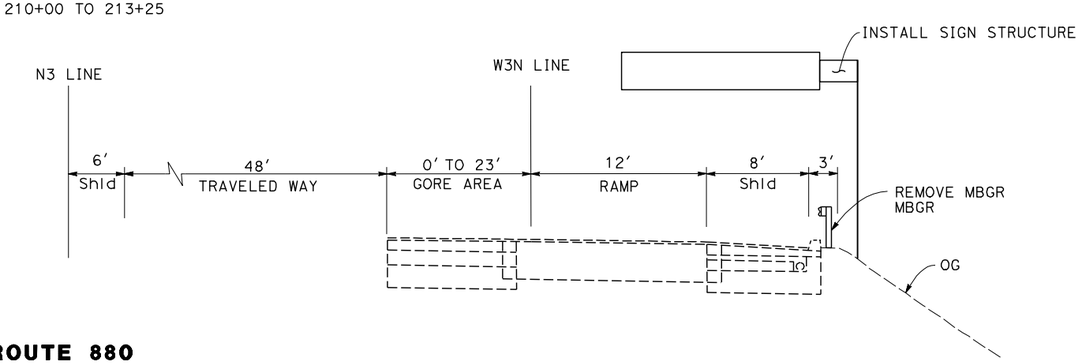

ROUTE 880
AT WASHINGTON Ave OFF-RAMP
W3N 213+25 TO 215+95

TYPICAL CROSS SECTIONS
NO SCALE

X-2

CALCULATED-DESIGNED BY	N. NGO
CHECKED BY	D. KAO
REVISED BY	N N
DATE REVISED	2/1/12
FUNCTIONAL SUPERVISOR	EDMUND CHOY

STATE OF CALIFORNIA - DEPARTMENT OF TRANSPORTATION
Caltrans
DESIGN

LAST REVISION 02-02-12
DATE PLOTTED => 16-FEB-2012
TIME PLOTTED => 09:21

NOTE:

FOR ACCURATE RIGHT OF WAY DATA, CONTACT
RIGHT OF WAY ENGINEERING AT THE DISTRICT OFFICE.

Dist	COUNTY	ROUTE	POST MILES TOTAL PROJECT	SHEET No.	TOTAL SHEETS
04	Ala, SCl	85,101, 880	Var	4	42

REGISTERED CIVIL ENGINEER DATE 2/13/12

2-13-12
PLANS APPROVAL DATE

REGISTERED PROFESSIONAL ENGINEER Danny Kao No. 61646 Exp. 6-30-12 CIVIL STATE OF CALIFORNIA

THE STATE OF CALIFORNIA OR ITS OFFICERS OR AGENTS SHALL NOT BE RESPONSIBLE FOR THE ACCURACY OR COMPLETENESS OF SCANNED COPIES OF THIS PLAN SHEET.

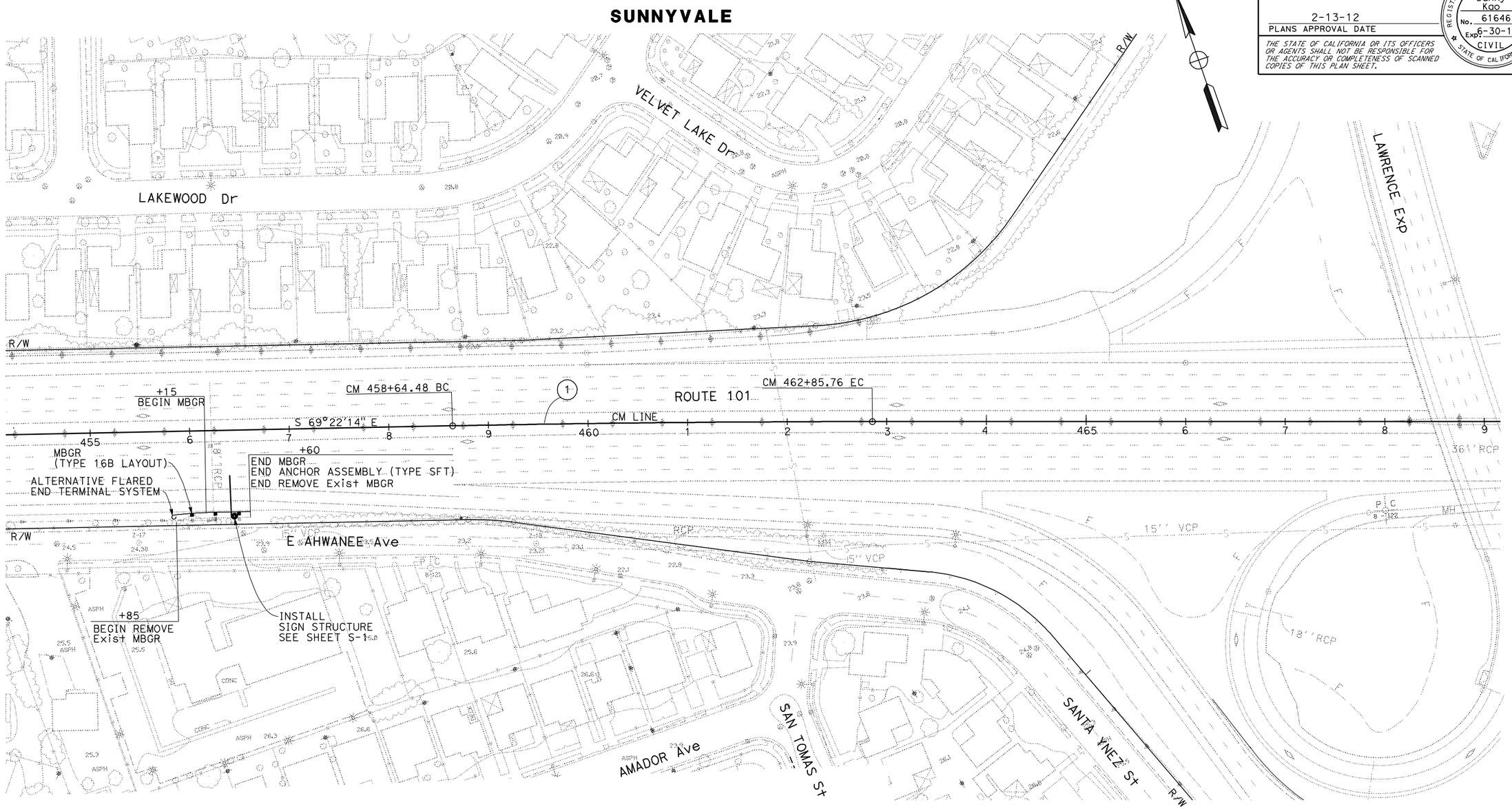

CURVE DATA

No. ⊕	R	Δ	T	L	N-COORDINATE	E-COORDINATE
1	21000′	1°08′58"	210.65′	421.28′	308707.81	1557329.58

LOCATION No. 1
OVERHEAD SIGN FOR LAWRENCE EXPRESSWAY SB OFF-RAMP

LAYOUT
SCALE: 1" = 50′

L-1

REVISED BY	DATE REVISED
N N	2/1/12

CALCULATED- N. NGO
DESIGNED BY D. KAO
CHECKED BY

FUNCTIONAL SUPERVISOR EDMUND CHOY

STATE OF CALIFORNIA - DEPARTMENT OF TRANSPORTATION
Caltrans DESIGN

LAST REVISION 02-02-12
DATE PLOTTED => 16-FEB-2012
TIME PLOTTED => 09:21

Dist	COUNTY	ROUTE	POST MILES TOTAL PROJECT	SHEET No.	TOTAL SHEETS
04	Ala, SCl	85,101, 880	Var	5	42

REGISTERED CIVIL ENGINEER DATE 2/13/12

2-13-12
PLANS APPROVAL DATE

REGISTERED PROFESSIONAL ENGINEER Danny Kao No. 61646 Exp. 6-30-12 CIVIL STATE OF CALIFORNIA

THE STATE OF CALIFORNIA OR ITS OFFICERS OR AGENTS SHALL NOT BE RESPONSIBLE FOR THE ACCURACY OR COMPLETENESS OF SCANNED COPIES OF THIS PLAN SHEET.

NOTE:

FOR ACCURATE RIGHT OF WAY DATA, CONTACT RIGHT OF WAY ENGINEERING AT THE DISTRICT OFFICE.

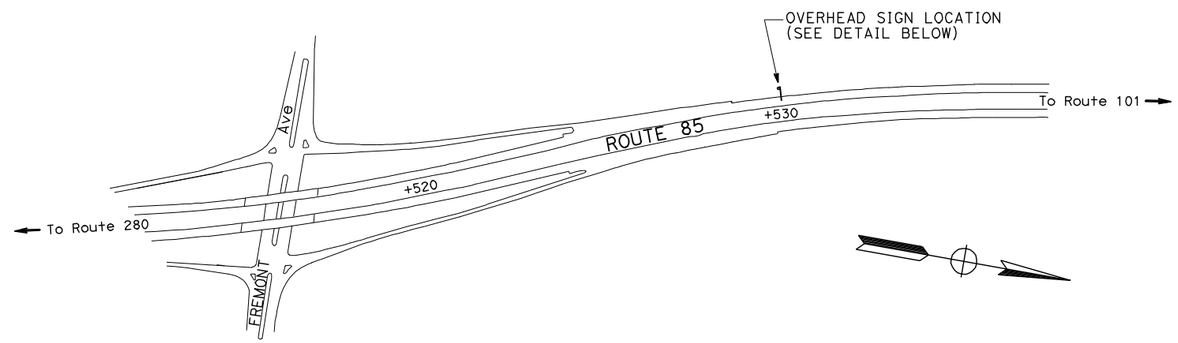

SUNNYVALE

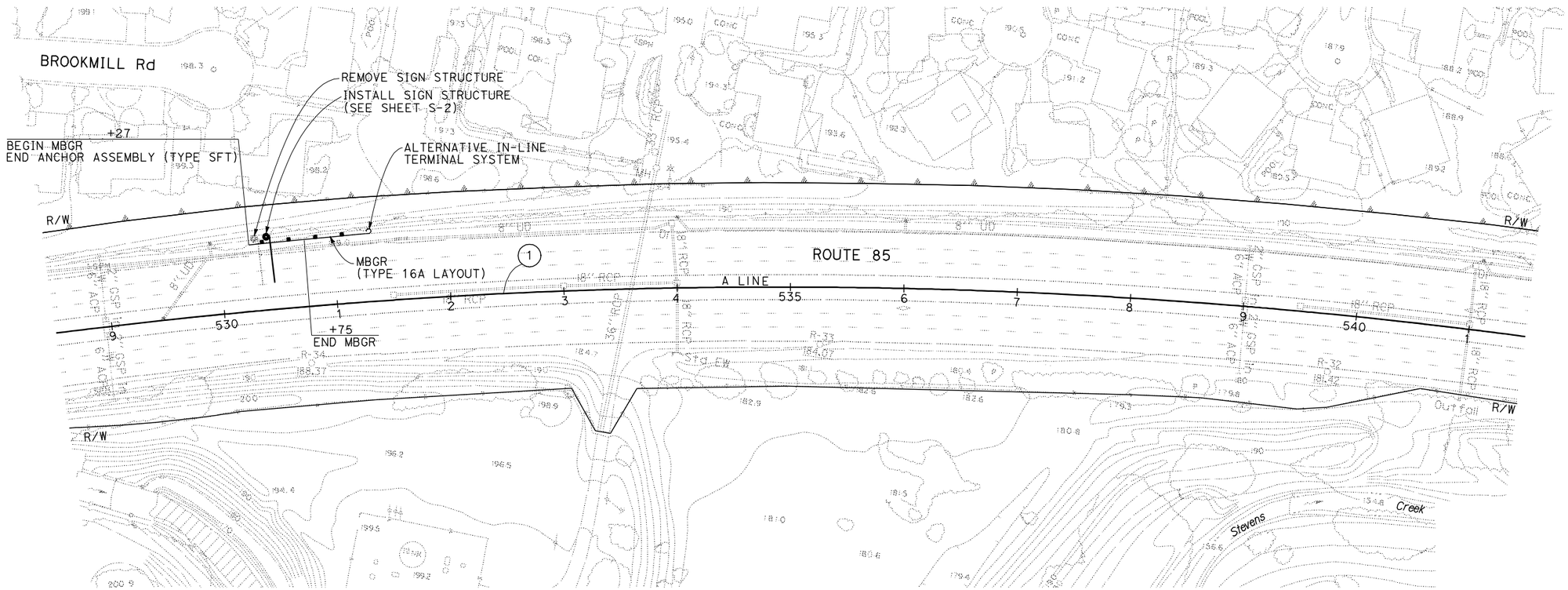

CURVE DATA (FROM Sta A 530+00 TO 540+00)

No. (X)	R	Δ	T	L	N-COORDINATE	E-COORDINATE
1	5000′	11°27′33"	501.67′	1000.00′	315890.977	1546115.734

LOCATION No. (2)
OVERHEAD SIGN FOR FREMONT Ave SB OFF-RAMP

FOR NOTES, ABBREVIATIONS AND LEGEND, SEE SHEET L-1

LAYOUT
SCALE: 1" = 50′

L-2

N N	2/1/12
REVISED BY	DATE REVISED
N. NGO	D. KAO
CALCULATED-DESIGNED BY	CHECKED BY
FUNCTIONAL SUPERVISOR	EDMUND CHOY

STATE OF CALIFORNIA - DEPARTMENT OF TRANSPORTATION
Caltrans
DESIGN

LAST REVISION 02-02-12 | DATE PLOTTED => 16-FEB-2012 TIME PLOTTED => 09:21

Dist	COUNTY	ROUTE	POST MILES TOTAL PROJECT	SHEET No.	TOTAL SHEETS
04	Ala, SCl	85,101, 880	Var	6	42

REGISTERED CIVIL ENGINEER DATE 2/13/12

2-13-12
PLANS APPROVAL DATE

REGISTERED PROFESSIONAL ENGINEER Danny Kao No. 61646 Exp. 6-30-12 CIVIL STATE OF CALIFORNIA

THE STATE OF CALIFORNIA OR ITS OFFICERS OR AGENTS SHALL NOT BE RESPONSIBLE FOR THE ACCURACY OR COMPLETENESS OF SCANNED COPIES OF THIS PLAN SHEET.

NOTE:

FOR ACCURATE RIGHT OF WAY DATA, CONTACT RIGHT OF WAY ENGINEERING AT THE DISTRICT OFFICE.

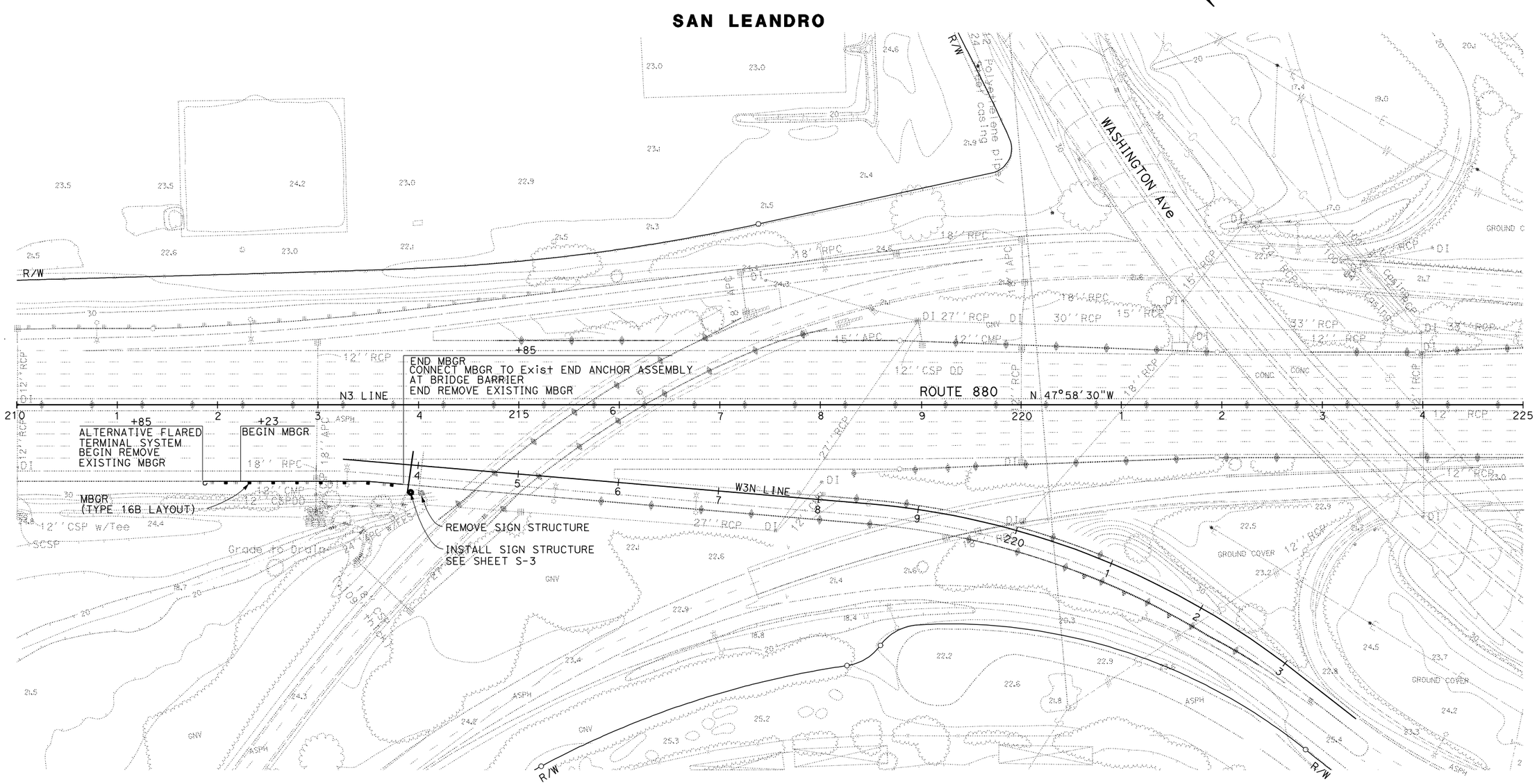

LOCATION No. 3

OVERHEAD SIGN FOR WASHINGTON Ave NB OFF-RAMP

FOR NOTES, ABBREVIATIONS AND LEGEND, SEE SHEET L-1

LAYOUT

SCALE: 1" = 50'

L-3

N N	2/1/12	REVISED BY / DATE REVISED
N. NGO	D. KAO	CALCULATED-DESIGNED BY / CHECKED BY
EDMUND CHOY		FUNCTIONAL SUPERVISOR

STATE OF CALIFORNIA - DEPARTMENT OF TRANSPORTATION

Caltrans® DESIGN

LAST REVISION 02-02-12 DATE PLOTTED => 16-FEB-2012 TIME PLOTTED => 09:21

BORDER LAST REVISED 7/2/2010 | USERNAME => s136183 DGN FILE => 0412000003ea003.dgn | RELATIVE BORDER SCALE IS IN INCHES 0 1 2 3 | UNIT 0721 | PROJECT NUMBER & PHASE 04120000031

Dist	COUNTY	ROUTE	POST MILES TOTAL PROJECT	SHEET No.	TOTAL SHEETS
04	Ala, SCl	85,101, 880	Var	7	42

REGISTERED CIVIL ENGINEER DATE 2/13/12

2-13-12
PLANS APPROVAL DATE

REGISTERED PROFESSIONAL ENGINEER Danny Kao No. 61646 Exp 6-30-12 CIVIL STATE OF CALIFORNIA

THE STATE OF CALIFORNIA OR ITS OFFICERS OR AGENTS SHALL NOT BE RESPONSIBLE FOR THE ACCURACY OR COMPLETENESS OF SCANNED COPIES OF THIS PLAN SHEET.

NOTES:

1. FOR ACCURATE RIGHT OF WAY DATA, CONTACT RIGHT OF WAY ENGINEERING AT THE DISTRICT OFFICE.
2. Temp CHANNELIZER (SURFACE MOUNTED) AT 25 FEET POST SPACING.

LEGEND

- TEMPORARY RAILING (TYPE K)
- CHANNELIZERS (SURFACE MOUNTED)
- Temp CRASH CUSHION MODULES

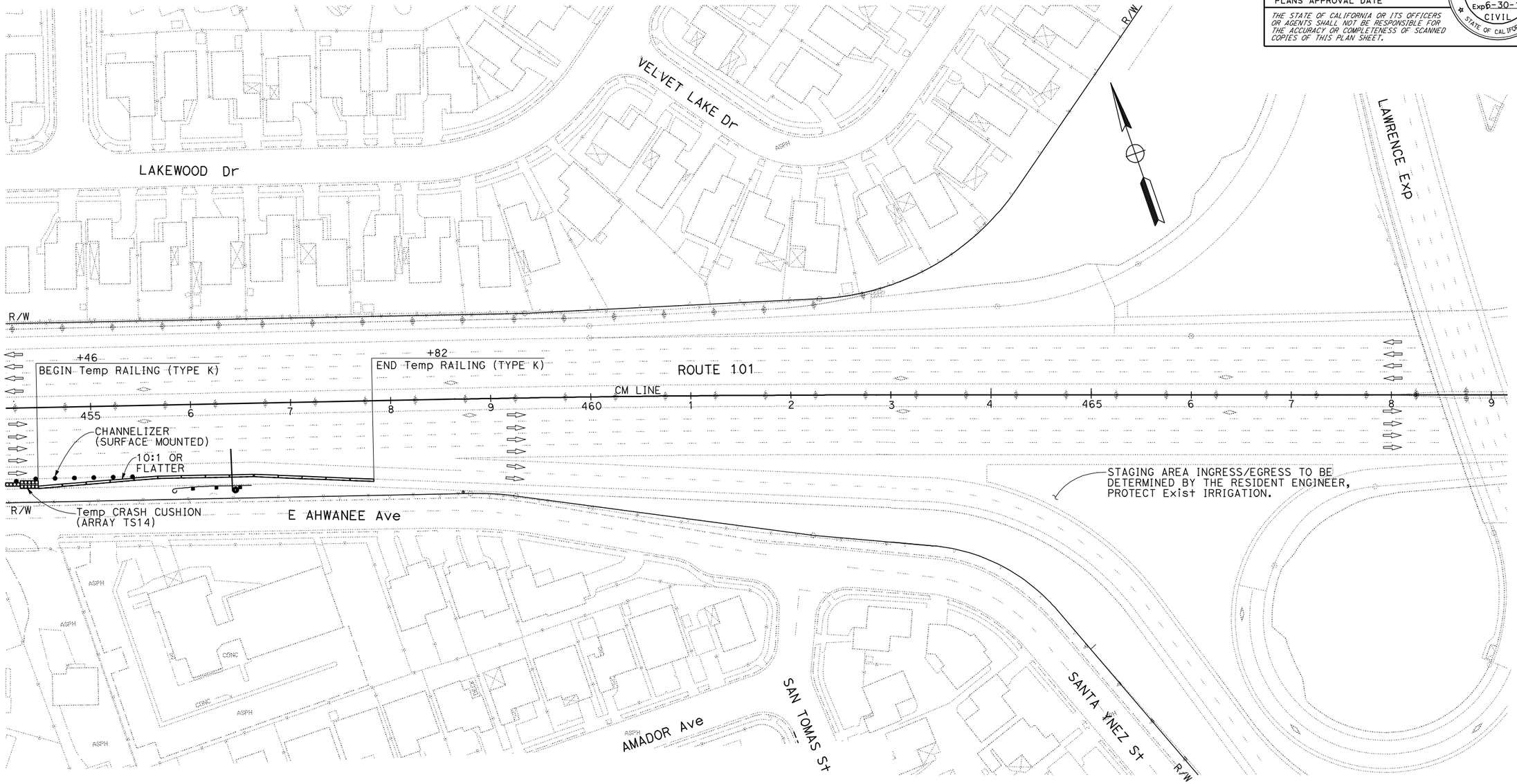

LOCATION No. 1

OVERHEAD SIGN FOR LAWRENCE EXPRESSWAY SB OFF-RAMP

STAGE CONSTRUCTION AND TRAFFIC HANDLING PLAN

SCALE: 1" = 50'

APPROVED FOR STAGE CONSTRUCTION AND TRAFFIC HANDLING WORK ONLY

SC-1

REVISED BY	N N
DATE REVISED	2/1/12
CALCULATED-DESIGNED BY	N. NGO
CHECKED BY	D. KAO
FUNCTIONAL SUPERVISOR	EDMUND CHOY

STATE OF CALIFORNIA - DEPARTMENT OF TRANSPORTATION
Caltrans
DESIGN

LAST REVISION 02-02-12
DATE PLOTTED => 16-FEB-2012
TIME PLOTTED => 09:21

Dist	COUNTY	ROUTE	POST MILES TOTAL PROJECT	SHEET No.	TOTAL SHEETS
04	Ala, SCl	85,101, 880	Var	8	42

REGISTERED CIVIL ENGINEER DATE 2/13/12

2-13-12
PLANS APPROVAL DATE

REGISTERED PROFESSIONAL ENGINEER Danny Kao No. 61646 Exp 6-30-12 CIVIL STATE OF CALIFORNIA

THE STATE OF CALIFORNIA OR ITS OFFICERS OR AGENTS SHALL NOT BE RESPONSIBLE FOR THE ACCURACY OR COMPLETENESS OF SCANNED COPIES OF THIS PLAN SHEET.

NOTE:

FOR ACCURATE RIGHT OF WAY DATA, CONTACT RIGHT OF WAY ENGINEERING AT THE DISTRICT OFFICE.

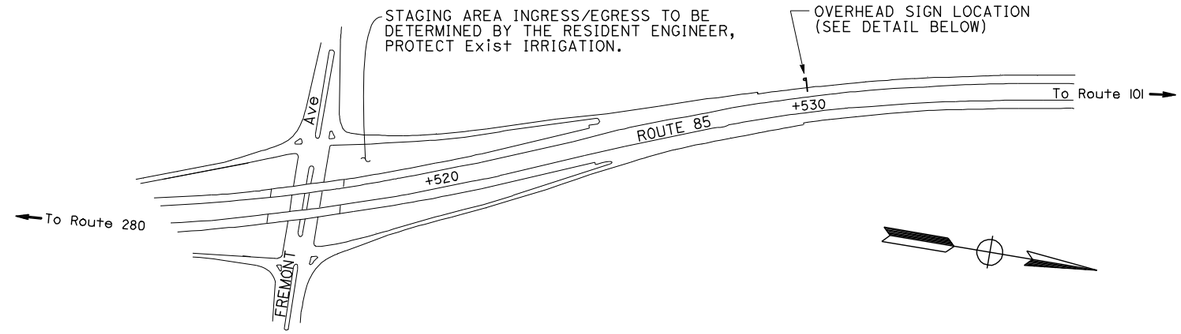

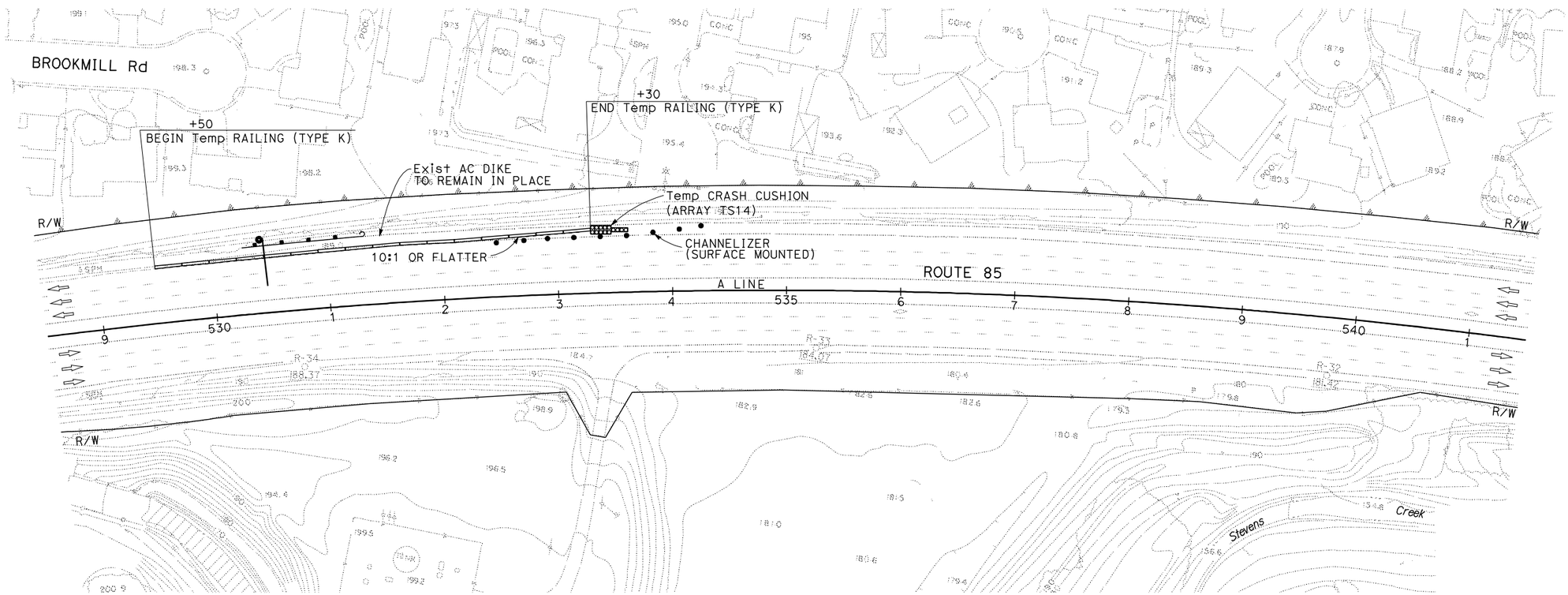

LOCATION No. 2

OVERHEAD SIGN FOR FREMONT Ave SB OFF-RAMP

APPROVED FOR STAGE CONSTRUCTION AND TRAFFIC HANDLING WORK ONLY

STAGE CONSTRUCTION AND TRAFFIC HANDLING PLAN

SCALE: 1" = 50'

FOR NOTES, ABBREVIATIONS AND LEGEND, SEE SHEET SC-1

SC-2

REVISED BY	DATE REVISED
N N	2/1/12

CALCULATED-DESIGNED BY: N. NGO
CHECKED BY: D. KAO
FUNCTIONAL SUPERVISOR: EDMUND CHOY

STATE OF CALIFORNIA - DEPARTMENT OF TRANSPORTATION
Caltrans DESIGN

LAST REVISION 02-02-12
DATE PLOTTED => 16-FEB-2012
TIME PLOTTED => 09:21

Dist	COUNTY	ROUTE	POST MILES TOTAL PROJECT	SHEET No.	TOTAL SHEETS
04	Ala, SCl	85,101, 880	Var	9	42

REGISTERED CIVIL ENGINEER DATE 2/13/12

2-13-12
PLANS APPROVAL DATE

REGISTERED PROFESSIONAL ENGINEER Danny Kao No. 61646 Exp 6-30-12 CIVIL STATE OF CALIFORNIA

THE STATE OF CALIFORNIA OR ITS OFFICERS OR AGENTS SHALL NOT BE RESPONSIBLE FOR THE ACCURACY OR COMPLETENESS OF SCANNED COPIES OF THIS PLAN SHEET.

NOTE:

FOR ACCURATE RIGHT OF WAY DATA, CONTACT RIGHT OF WAY ENGINEERING AT THE DISTRICT OFFICE.

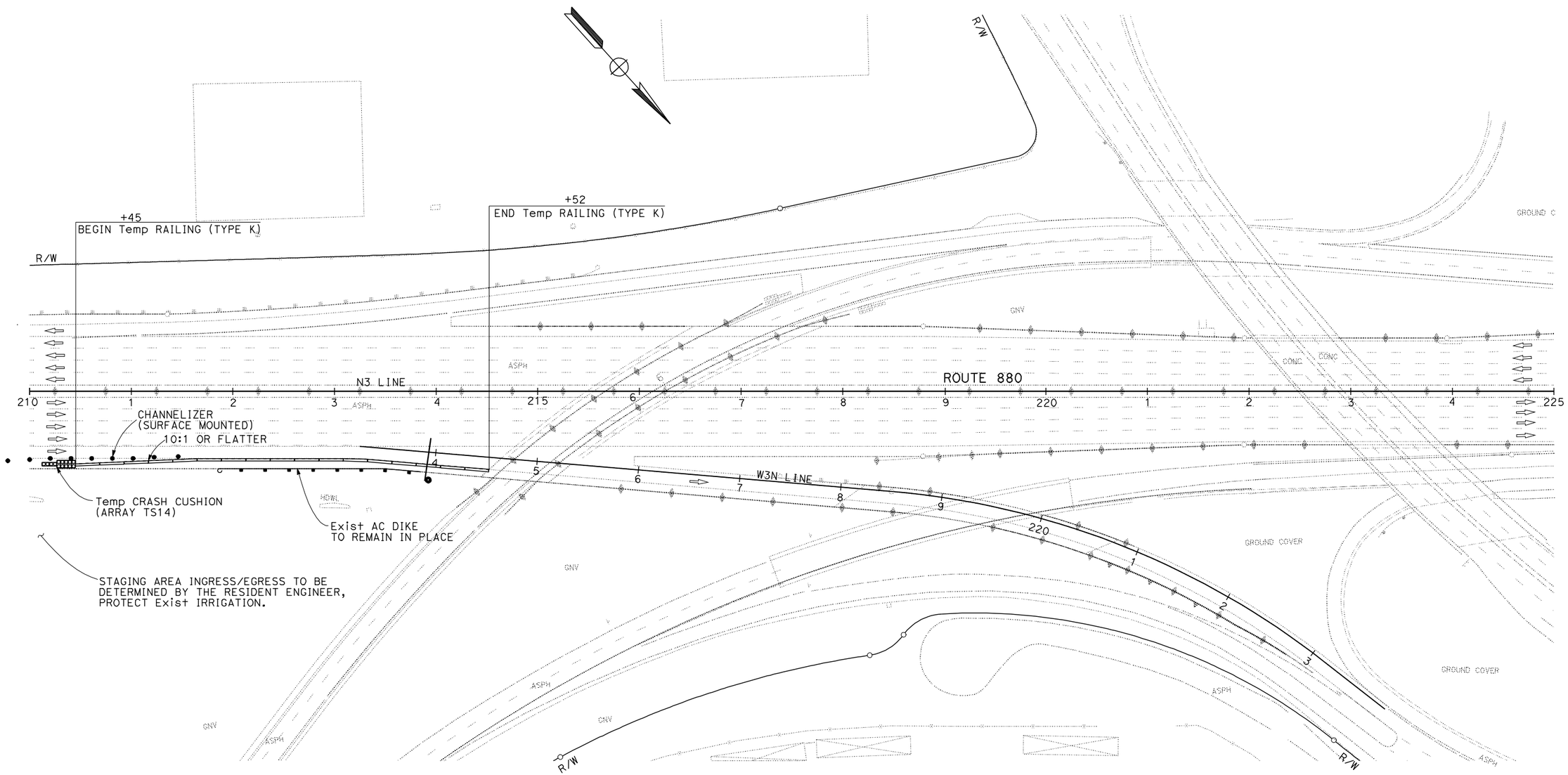

LOCATION No. 3

OVERHEAD SIGN FOR WASHINGTON Ave NB OFF-RAMP

APPROVED FOR STAGE CONSTRUCTION AND TRAFFIC HANDLING WORK ONLY

STAGE CONSTRUCTION AND TRAFFIC HANDLING PLAN

SCALE: 1" = 50'

FOR NOTES, ABBREVIATIONS AND LEGEND, SEE SHEET SC-1

SC-3

STATE OF CALIFORNIA - DEPARTMENT OF TRANSPORTATION
Caltrans® DESIGN

FUNCTIONAL SUPERVISOR: EDMUND CHOY

CALCULATED-DESIGNED BY: N. NGO
CHECKED BY: D. KAO

REVISED BY: N N
DATE REVISED: 2/1/12

LAST REVISION 02-02-12
DATE PLOTTED => 16-FEB-2012
TIME PLOTTED => 09:21

Dist	COUNTY	ROUTE	POST MILES TOTAL PROJECT	SHEET No.	TOTAL SHEETS
04	Ala, SCl	85,101, 880	Var	10	42

REGISTERED CIVIL ENGINEER 2/3/12 DATE

2-13-12
PLANS APPROVAL DATE

REGISTERED PROFESSIONAL ENGINEER Jerilyn L. Struven No. 49964 Exp. 12-31-12 CIVIL STATE OF CALIFORNIA

THE STATE OF CALIFORNIA OR ITS OFFICERS OR AGENTS SHALL NOT BE RESPONSIBLE FOR THE ACCURACY OR COMPLETENESS OF SCANNED COPIES OF THIS PLAN SHEET.

NOTE:

FOR ACCURATE RIGHT OF WAY DATA, CONTACT RIGHT OF WAY ENGINEERING AT THE DISTRICT OFFICE.

LEGEND:

- [No.] CONSTRUCTION AREA SIGNS
- (No.) ROADSIDE SIGN NUMBER
- ■ REMOVE ROADSIDE SIGN
- ◇(L) OVERHEAD SIGN LETTER

NOTES:

1. EXACT LOCATION AND POSITION OF SIGNS TO BE DETERMINED BY THE ENGINEER.
2. CONSTRUCTION AREA SIGNS TO BE STATIONARY MOUNTED.
3. ALL OVERHEAD SIGNS ARE FORMED PANELS UNLESS OTHERWISE NOTED.

ABBREVIATIONS

FRP FIBERGLASS REINFORCED PLASTIC
RSPF REMOVABLE SIGN PANEL FRAME

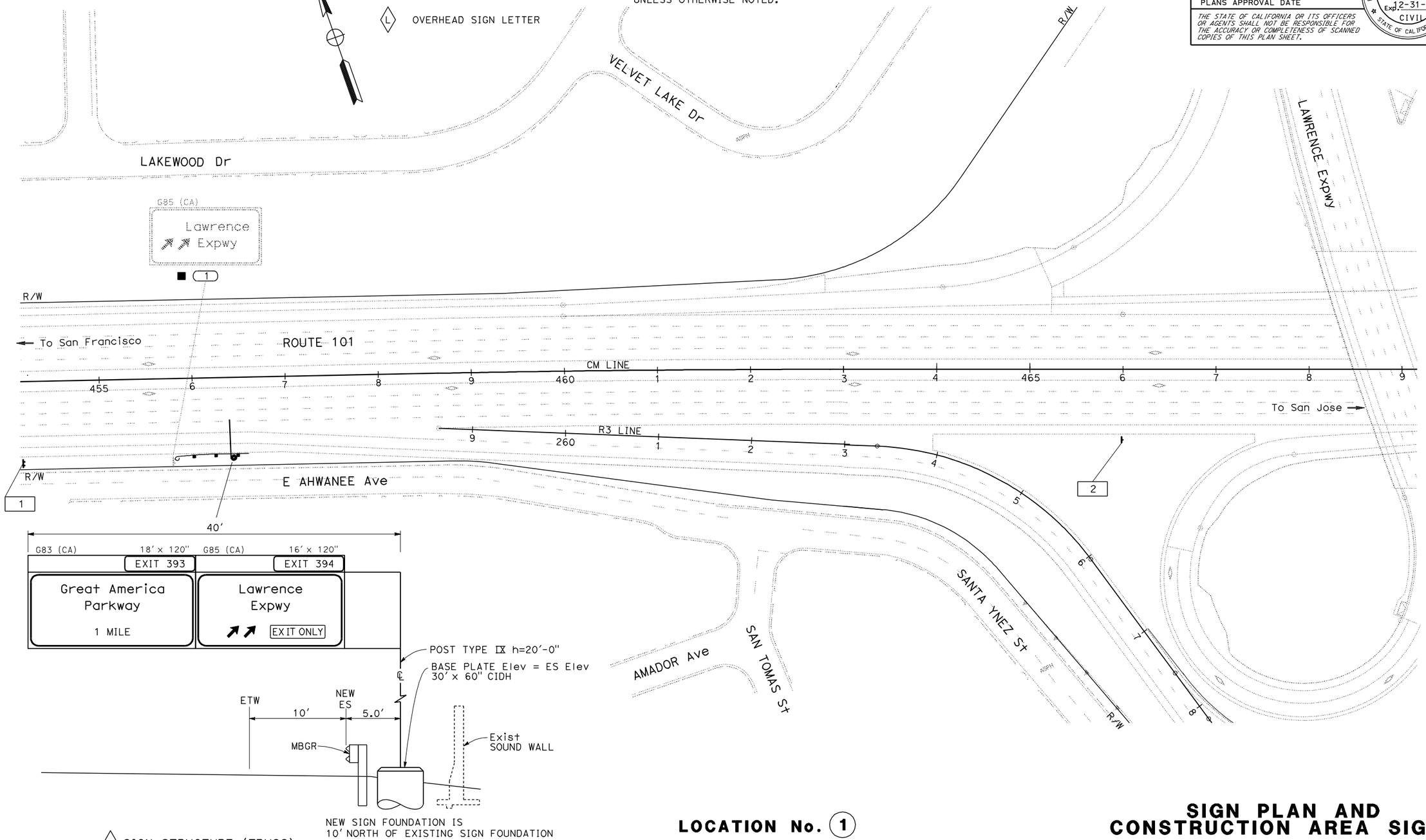

◇(A) SIGN STRUCTURE (TRUSS)
CM 456+50 FSBT

LOCATION No. (1)

OVERHEAD SIGN FOR LAWRENCE EXPRESSWAY SB OFF-RAMP

APPROVED FOR SIGN WORK ONLY

SIGN PLAN AND CONSTRUCTION AREA SIGNS

NO SCALE

S-1

REVISED BY	H R	HERMINIO RUIDERA	JERILYN L. STRUVEN
DATE REVISED	2/2/12	CALCULATED-DESIGNED BY	CHECKED BY
FUNCTIONAL SUPERVISOR	ROLAND AU-YEUNG		

STATE OF CALIFORNIA - DEPARTMENT OF TRANSPORTATION
Caltrans® TRAFFIC

LAST REVISION 02-02-12 | DATE PLOTTED => 16-FEB-2012 | TIME PLOTTED => 09:21

Dist	COUNTY	ROUTE	POST MILES TOTAL PROJECT	SHEET No.	TOTAL SHEETS
04	Ala, SCl	85,101, 880	Var	11	42

REGISTERED CIVIL ENGINEER 2/3/12 DATE

2-13-12
PLANS APPROVAL DATE

REGISTERED PROFESSIONAL ENGINEER Jerilyn L. Struven No. 49964 Exp. 12-31-12 CIVIL STATE OF CALIFORNIA

THE STATE OF CALIFORNIA OR ITS OFFICERS OR AGENTS SHALL NOT BE RESPONSIBLE FOR THE ACCURACY OR COMPLETENESS OF SCANNED COPIES OF THIS PLAN SHEET.

NOTE:

FOR ACCURATE RIGHT OF WAY DATA, CONTACT RIGHT OF WAY ENGINEERING AT THE DISTRICT OFFICE.

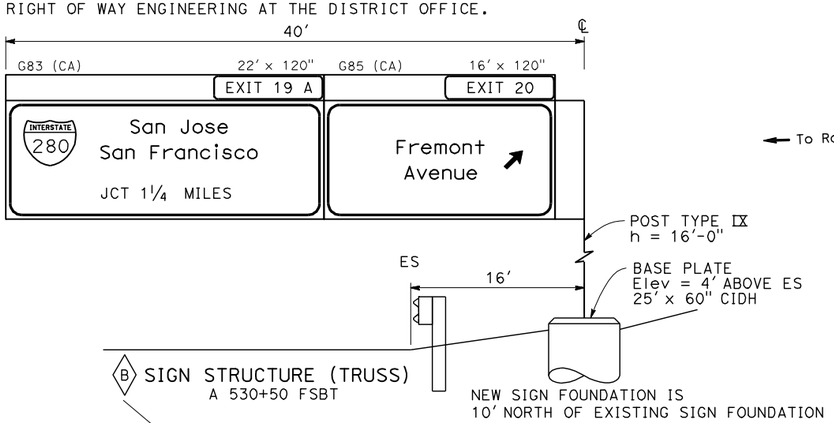

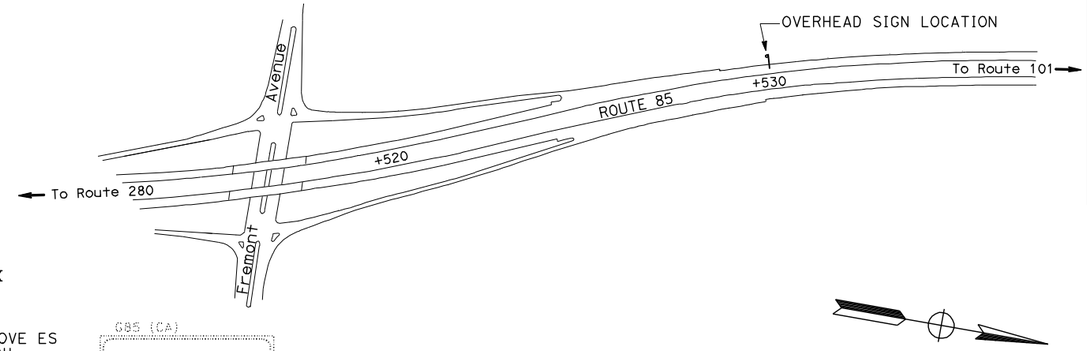

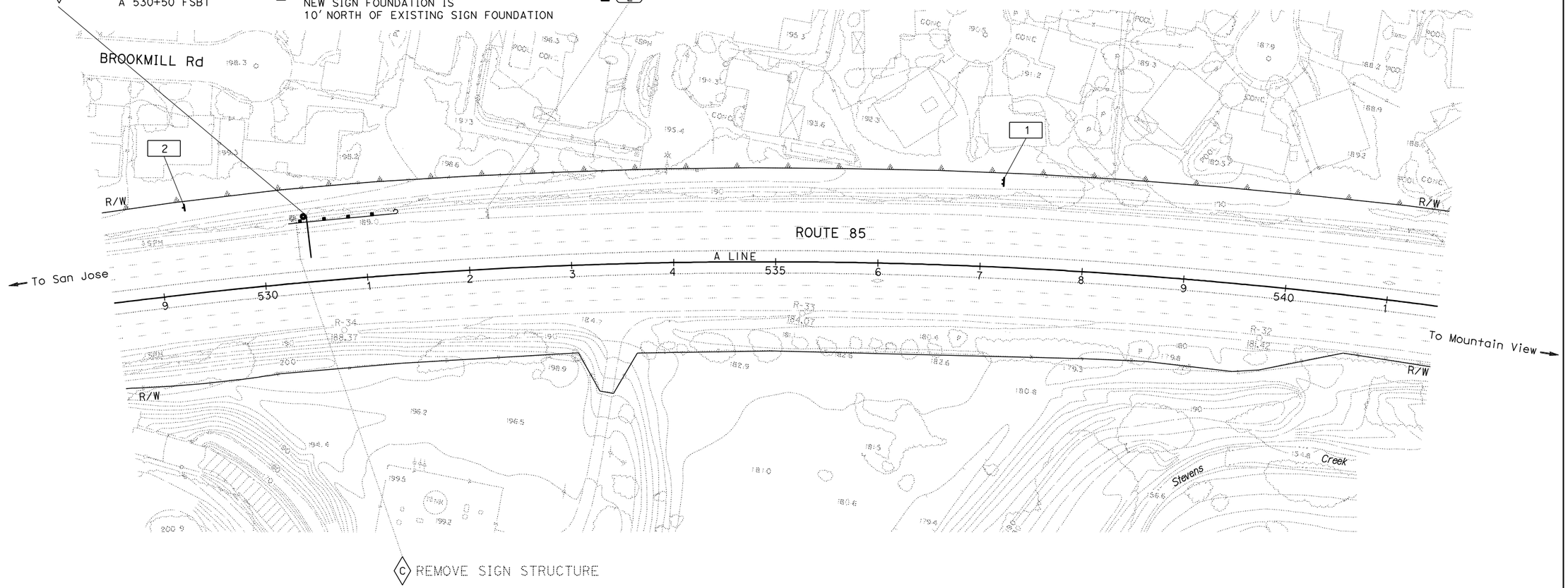

LOCATION No. 2

OVERHEAD SIGN FOR FREMONT Ave SB OFF-RAMP

SIGN PLAN AND CONSTRUCTION AREA SIGNS

NO SCALE

APPROVED FOR SIGN WORK ONLY

S-2

REVISED BY	H R
DATE REVISED	2/2/12
HERMINIO RUIDERA	JERILYN L. STRUVEN
CALCULATED-DESIGNED BY	CHECKED BY
FUNCTIONAL SUPERVISOR	ROLAND AU-YEUNG

STATE OF CALIFORNIA - DEPARTMENT OF TRANSPORTATION

Caltrans® TRAFFIC

LAST REVISION DATE PLOTTED => 16-FEB-2012 TIME PLOTTED => 09:21

02-02-12

Dist	COUNTY	ROUTE	POST MILES TOTAL PROJECT	SHEET No.	TOTAL SHEETS
04	Ala, SCl	85,101, 880	Var	12	42

REGISTERED CIVIL ENGINEER 2/3/12 DATE

2-13-12
PLANS APPROVAL DATE

REGISTERED PROFESSIONAL ENGINEER Jerilyn L. Struven No. 49964 Exp. 12-31-12 CIVIL STATE OF CALIFORNIA

THE STATE OF CALIFORNIA OR ITS OFFICERS OR AGENTS SHALL NOT BE RESPONSIBLE FOR THE ACCURACY OR COMPLETENESS OF SCANNED COPIES OF THIS PLAN SHEET.

NOTE:

FOR ACCURATE RIGHT OF WAY DATA, CONTACT RIGHT OF WAY ENGINEERING AT THE DISTRICT OFFICE.

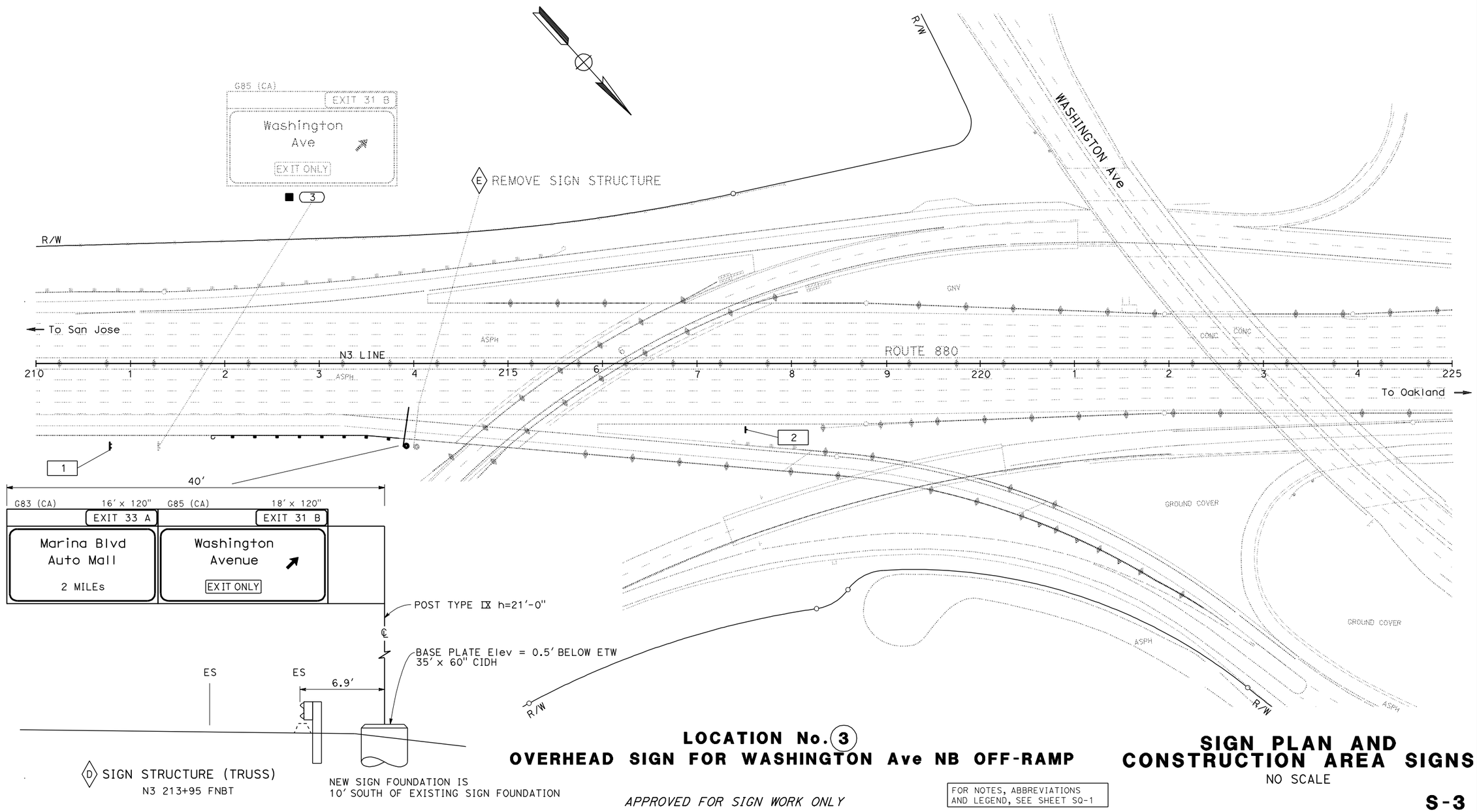

LOCATION No. 3
OVERHEAD SIGN FOR WASHINGTON Ave NB OFF-RAMP

APPROVED FOR SIGN WORK ONLY

FOR NOTES, ABBREVIATIONS AND LEGEND, SEE SHEET SQ-1

SIGN PLAN AND CONSTRUCTION AREA SIGNS

NO SCALE

S-3

CALCULATED-DESIGNED BY	HERMINIO RUIDERA	REVISED BY	H R
CHECKED BY	JERILYN L. STRUVEN	DATE REVISED	2/2/12
FUNCTIONAL SUPERVISOR	ROLAND AU-YEUNG		

STATE OF CALIFORNIA - DEPARTMENT OF TRANSPORTATION
Caltrans® TRAFFIC

LAST REVISION 02-02-12 DATE PLOTTED => 16-FEB-2012 TIME PLOTTED => 09:21

Dist	COUNTY	ROUTE	POST MILES TOTAL PROJECT	SHEET No.	TOTAL SHEETS
04	Ala, SCl	85,101, 880	Var	13	42

REGISTERED CIVIL ENGINEER 2/3/12 DATE

2-13-12
PLANS APPROVAL DATE

REGISTERED PROFESSIONAL ENGINEER Jerilyn L. Struven No. 49964 Exp. 12-31-12 CIVIL STATE OF CALIFORNIA

THE STATE OF CALIFORNIA OR ITS OFFICERS OR AGENTS SHALL NOT BE RESPONSIBLE FOR THE ACCURACY OR COMPLETENESS OF SCANNED COPIES OF THIS PLAN SHEET.

6.0" RADIUS, 2.0" BORDER, WHITE ON GREEN;
[EXIT] E; [393] E;
12.0" RADIUS, 2.0" BORDER, WHITE ON GREEN;
[GREAT AMERICA] E MOD; [PARKWAY] E MOD; [1] E; [MILE] E;

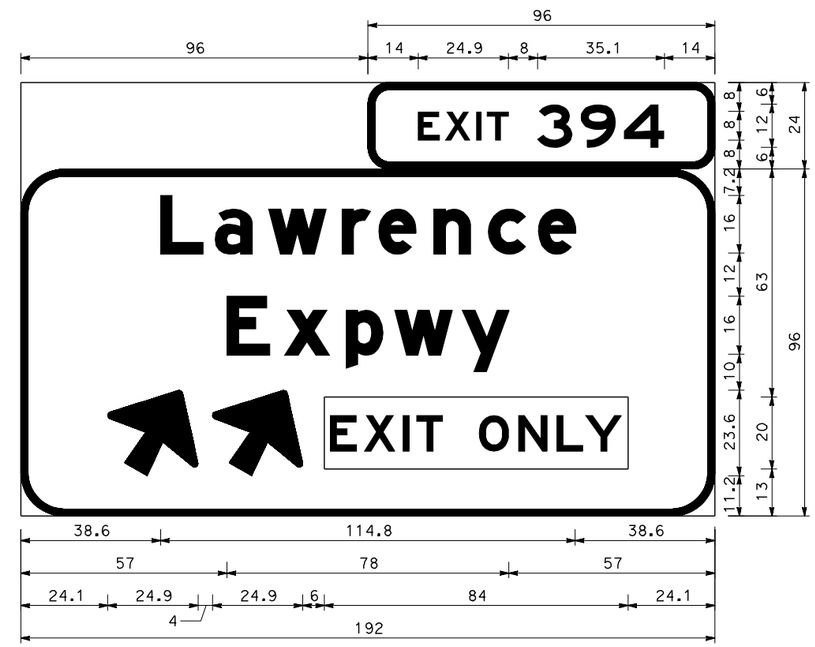

6.0" RADIUS, 2.0" BORDER, WHITE ON GREEN;
[EXIT] E; [394] E;
12.0" RADIUS, 2.0" BORDER, WHITE ON GREEN;
[LAWRENCE] E MOD; [EXPWY] E MOD; ARROW 16CAP-2LH - 25.0" 60°;
ARROW 16CAP-2LH - 25.0" 60°; W61C(CA);

SIGN DETAILS
NO SCALE

SD-1

REVISED BY	H R
DATE REVISED	2/2/12
CALCULATED-DESIGNED BY	HERMINIO RUIDERA
CHECKED BY	JERILYN L. STRUVEN
FUNCTIONAL SUPERVISOR	ROLAND AU-YEUNG

STATE OF CALIFORNIA - DEPARTMENT OF TRANSPORTATION
Caltrans
TRAFFIC

LAST REVISION 02-02-12 | DATE PLOTTED => 16-FEB-2012 | TIME PLOTTED => 09:21

Dist	COUNTY	ROUTE	POST MILES TOTAL PROJECT	SHEET No.	TOTAL SHEETS
04	Ala, SCl	85,101, 880	Var	14	42

REGISTERED CIVIL ENGINEER 2/3/12 DATE

2-13-12
PLANS APPROVAL DATE

REGISTERED PROFESSIONAL ENGINEER Jerilyn L. Struven No. 49964 Exp. 12-31-12 CIVIL STATE OF CALIFORNIA

THE STATE OF CALIFORNIA OR ITS OFFICERS OR AGENTS SHALL NOT BE RESPONSIBLE FOR THE ACCURACY OR COMPLETENESS OF SCANNED COPIES OF THIS PLAN SHEET.

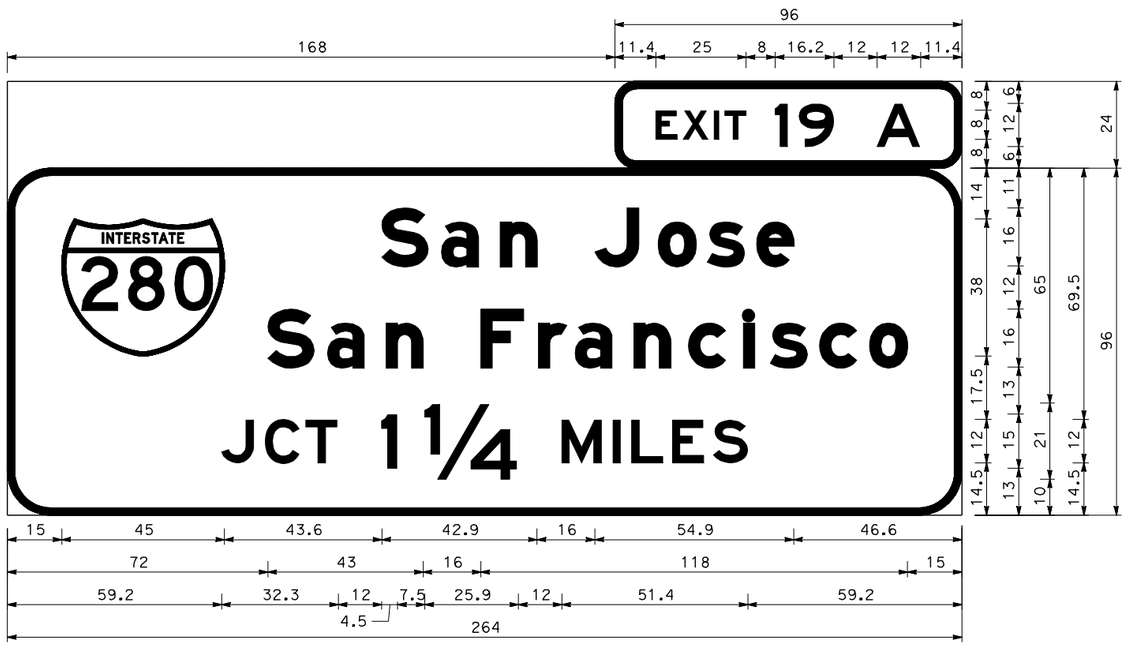

6.0" RADIUS, 2.0" BORDER, WHITE ON GREEN;
[EXIT] E; [19 A] E;
12.0" RADIUS, 2.0" BORDER, WHITE ON GREEN;
[SAN JOSE] E MOD; [SAN FRANCISCO] E MOD; [JCT] E; [1] E; [5/64] E; [MILES] E;

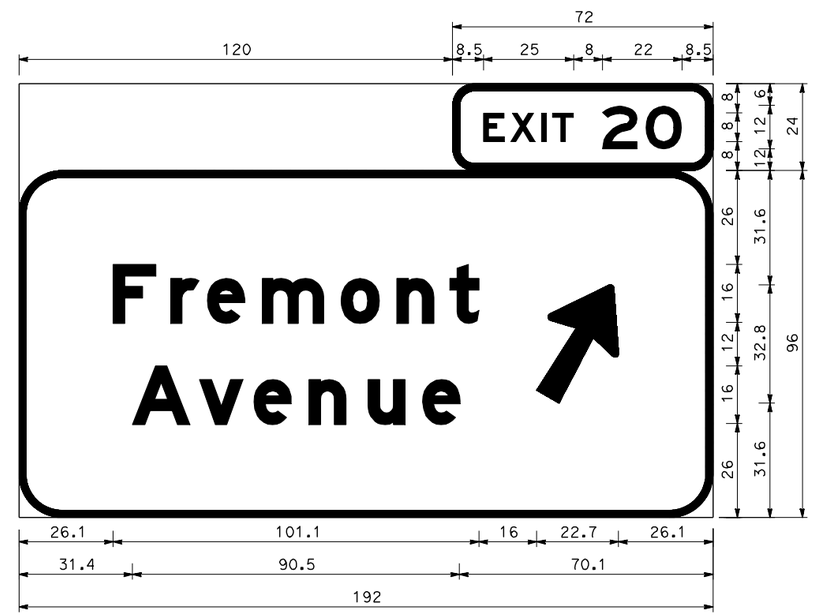

6.0" RADIUS, 2.0" BORDER, WHITE ON GREEN;
[EXIT] E; [20] E;
12.0" RADIUS, 2.0" BORDER, WHITE ON GREEN;
[FREMONT] E MOD; [AVENUE] E MOD; ARROW 16CAP-2LV - 35.6" 60°;

SIGN DETAILS
NO SCALE

SD-2

HERMINIO RUIDERA	REVISED BY: H R
JERILYN L. STRUVEN	DATE REVISED: 2/2/12
CALCULATED-DESIGNED BY	
CHECKED BY	
FUNCTIONAL SUPERVISOR: ROLAND AU-YEUNG	

STATE OF CALIFORNIA - DEPARTMENT OF TRANSPORTATION
Caltrans® TRAFFIC

LAST REVISION 02-02-12 | DATE PLOTTED => 16-FEB-2012 | TIME PLOTTED => 09:22

Dist	COUNTY	ROUTE	POST MILES TOTAL PROJECT	SHEET No.	TOTAL SHEETS
04	Ala, SCl	85,101, 880	Var	15	42

REGISTERED CIVIL ENGINEER 2/3/12 DATE

2-13-12
PLANS APPROVAL DATE

REGISTERED PROFESSIONAL ENGINEER Jerilyn L. Struven No. 49964 Exp. 12-31-12 CIVIL STATE OF CALIFORNIA

THE STATE OF CALIFORNIA OR ITS OFFICERS OR AGENTS SHALL NOT BE RESPONSIBLE FOR THE ACCURACY OR COMPLETENESS OF SCANNED COPIES OF THIS PLAN SHEET.

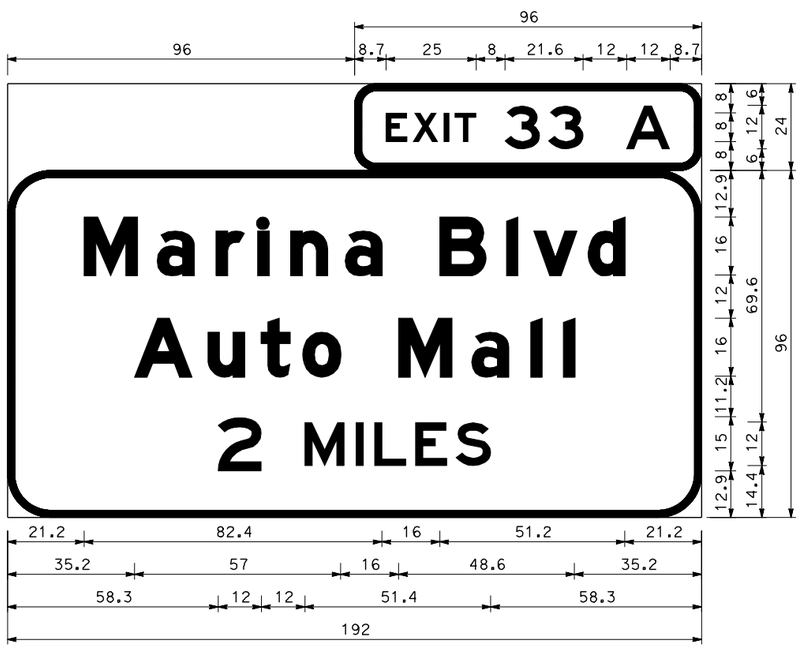

6.0" RADIUS, 2.0" BORDER, WHITE ON GREEN;
[EXIT] E; [33 A] E;
12.0" RADIUS, 2.0" BORDER, WHITE ON GREEN;
[MARINA BLVD] E MOD; [AUTO MALL] E MOD; [2] E; [MILES] E;

6.0" RADIUS, 2.0" BORDER, WHITE ON GREEN;
[EXIT] E; [31 B] E;
12.0" RADIUS, 2.0" BORDER, WHITE ON GREEN;
[WASHINGTON] E MOD; [AVENUE] E MOD; W61C(CA);
ARROW 16CAP-2LV - 35.6" 60°;

SIGN DETAILS
NO SCALE

SD-3

REVISED BY	H R
DATE REVISED	2/2/12
CALCULATED-DESIGNED BY	HERMINIO RUIDERA
CHECKED BY	JERILYN L. STRUVEN
FUNCTIONAL SUPERVISOR	ROLAND AU-YEUNG

STATE OF CALIFORNIA - DEPARTMENT OF TRANSPORTATION
Caltrans® TRAFFIC

LAST REVISION 02-02-12 | DATE PLOTTED => 16-FEB-2012 | TIME PLOTTED => 09:22

Dist	COUNTY	ROUTE	POST MILES TOTAL PROJECT	SHEET No.	TOTAL SHEETS
04	Ala, SCl	85,101, 880	Var	16	42

REGISTERED CIVIL ENGINEER 2/3/12 DATE

2-13-12
PLANS APPROVAL DATE

REGISTERED PROFESSIONAL ENGINEER Jerilyn L. Struven No. 49964 Exp. 12-31-12 CIVIL STATE OF CALIFORNIA

THE STATE OF CALIFORNIA OR ITS OFFICERS OR AGENTS SHALL NOT BE RESPONSIBLE FOR THE ACCURACY OR COMPLETENESS OF SCANNED COPIES OF THIS PLAN SHEET.

STATIONARY MOUNTED CONSTRUCTION AREA SIGNS

SIGN No.	SIGN CODE	SIGN MESSAGE	PANEL SIZE	NUMBER OF POSTS AND SIZE	QUANTITY
1	W20-1	ROAD WORK AHEAD	60" x 60"	2 - 4" x 6"	3
2	G20-2	END ROAD WORK	36" x 18"	1 - 4" x 4"	3

ROADSIDE SIGN QUANTITIES

SIGN (No.)	CODE	PANEL SIZE	REMOVE ROADSIDE SIGN
			EA
1	G85(CA)		1
2	G85(CA)		1
3	G85(CA)		1
TOTAL			3

OVERHEAD SIGN QUANTITIES

SIGN (L)	FURNISH SIGN STRUCTURE TRUSS	INSTALL SIGN STRUCTURE TRUSS	REMOVE SIGN STRUCTURE	CONCRETE PILE (SIGN FOUNDATION) 60" CIDH
	LB		EA	FT
A	22800	22800		30
B	22000	22000		25
C			1	
D	22800	22800		35
E			1	
TOTAL	67600	67600	2	90

SIGN QUANTITIES

SQ-1

STATE OF CALIFORNIA - DEPARTMENT OF TRANSPORTATION
Caltrans TRAFFIC

FUNCTIONAL SUPERVISOR: ROLAND AU-YEUNG
CALCULATED-DESIGNED BY: HERMINIO RUIDERA
CHECKED BY: JERILYN L. STRUVEN
REVISED BY: H R
DATE REVISED: 2/2/12

LAST REVISION 02-02-12 | DATE PLOTTED => 16-FEB-2012 | TIME PLOTTED => 09:22

Dist	COUNTY	ROUTE	POST MILES TOTAL PROJECT	SHEET No.	TOTAL SHEETS
04	Ala, SCl	85,101, 880	Var	17	42

REGISTERED CIVIL ENGINEER 2/3/12 DATE

2-13-12
PLANS APPROVAL DATE

REGISTERED PROFESSIONAL ENGINEER Jerilyn L. Struven No. 49964 Exp. 12-31-12 CIVIL STATE OF CALIFORNIA

THE STATE OF CALIFORNIA OR ITS OFFICERS OR AGENTS SHALL NOT BE RESPONSIBLE FOR THE ACCURACY OR COMPLETENESS OF SCANNED COPIES OF THIS PLAN SHEET.

SIGN PANEL QUANTITIES

SHEET No.	SIGN LETTER	SIGN CODE	PANEL SIZE (Inch x Inch)	SIGN AREA	SINGLE FACE	DOUBLE FACE	BACKGROUND		LEGEND		GRAPHIC FILM		OVERHEAD
							SHEETING COLOR	RETROREFLECTIVE ASTM TYPE	SHEETING COLOR	RETROREFLECTIVE ASTM TYPE	STANDARD	PREMIUM	FORMED WITH RSPF
			FT	SQFT									SQFT
S-1	A	G83(CA)	18 x 10	180	X		GREEN	IV	WHITE	IX		X	180
		G85(CA)	16 x 10	160	X		GREEN	IV	WHITE	IX		X	160
S-2	B	G83(CA)	22 x 10	220	X		GREEN	IV	WHITE	IX		X	220
		G85(CA)	16 x 10	160	X		GREEN	IV	WHITE	IX		X	160
S-3	C	G83(CA)	16 x 10	160	X		GREEN	IV	WHITE	IX		X	160
		G85(CA)	18 x 10	180	X		GREEN	IV	WHITE	IX		X	180
TOTAL													1060

CALCULATED-DESIGNED BY HERMINIO RUIDERA
CHECKED BY JERILYN L. STRUVEN
REVISED BY H R
DATE REVISED 2/2/12
FUNCTIONAL SUPERVISOR ROLAND AU-YEUNG

STATE OF CALIFORNIA - DEPARTMENT OF TRANSPORTATION
Caltrans TRAFFIC

SIGN QUANTITIES

SQ-2

LAST REVISION 02-02-12
DATE PLOTTED => 16-FEB-2012
TIME PLOTTED => 09:22

Dist	COUNTY	ROUTE	POST MILES TOTAL PROJECT	SHEET No.	TOTAL SHEETS
04	Ala, SCl	85,101, 880	Var	18	42

REGISTERED CIVIL ENGINEER DATE 2/13/12

2-13-12
PLANS APPROVAL DATE

REGISTERED PROFESSIONAL ENGINEER Danny Kao No. 61646 Exp. 6-30-12 CIVIL STATE OF CALIFORNIA

THE STATE OF CALIFORNIA OR ITS OFFICERS OR AGENTS SHALL NOT BE RESPONSIBLE FOR THE ACCURACY OR COMPLETENESS OF SCANNED COPIES OF THIS PLAN SHEET.

METAL BEAM GUARD RAILING

SHEET No.	ROUTE	STATION	LOCATION	DIRECTION	(N) LAYOUT TYPE	MBGR (WOOD POST)	ALTERNATIVE IN-LINE TERMINAL SYSTEM	ALTERNATIVE FLARED TERMINAL SYSTEM	END ANCHOR ASSEMBLY (TYPE SFT)	OBJECT MARKER (TYPE L-1)	OBJECT MARKER (TYPE P)	GUARD RAILING DELINEATOR
						LF	EA					
L-1	101	CM 455+77 TO 456+60	1	SB	16B	45		1	1	1		4
L-2	85	A 530+27 TO 531+25	2	SB	16A	48	1		1		1	4
L-3	880	N3 211+85 TO 213+85	3	NB	16B	162		1		1		8
TOTAL						255	1	2	2	2	1	16

(N) = NOT A SEPARATE PAY ITEM, FOR INFORMATION ONLY

ROADWAY EXCAVATION (MBGR AT LAWRENCE EXPWY)

SHEET No.	ROUTE	STATION	LOCATION	DIRECTION	CY
L-1	101	CM 455+77 TO 456+60	1	SB	1
TOTAL					1

REMOVE METAL BEAM GUARD RAILING

SHEET No.	ROUTE	STATION	LOCATION	DIRECTION	LF	(N) TERMINAL SECTION	(N) END SECTION
L-1	101	CM 455+85 TO 456+60	1	SB	75	1	1
L-3	880	N3 211+85 TO 213+85	3	NB	200	1	
TOTAL					275		

VEGETATION CONTROL (MINOR CONCRETE)

SHEET No.	ROUTE	STATION	LOCATION	DIRECTION	(N) LANDSCAPE FABRIC	(N) GROUT	MINOR CONCRETE
					SQYD		
L-1	101	CM 455+77 TO 456+60	1	SB	12	4	44
L-2	85	A 530+27 TO 531+25	2	SB	14	5	51
L-3	880	N3 211+85 TO 213+90	3	NB	27	9	97
TOTAL							192

(N) = NOT A SEPARATE PAY ITEM, FOR INFORMATION ONLY.

TEMPORARY RAILING (TYPE K)

SHEET No.	ROUTE	STATION	LOCATION	DIRECTION	LF
SC-1	101	CM 454+46 TO 457+82	1	SB	340
SC-2	85	A 529+50 TO 533+30	2	SB	380
SC-3	880	N3 210+45 TO 214+52	3	NB	420
TOTAL					1140

CHANNELIZER (SURFACE MOUNTED)

SHEET No.	ROUTE	STATION	LOCATION	DIRECTION	EA
SC-1	101	CM 453+45 TO 455+45	1	SB	9
SC-2	85	A 512+45 TO 514+45	2	SB	9
SC-3	880	N3 209+45 TO 211+45	3	NB	9
TOTAL					27

TEMPORARY CRASH CUSHION MODULE

SHEET No.	ROUTE	STATION	LOCATION	DIRECTION	ARRAY TS14
					EA
SC-1	101	CM 454+46	1	SB	14
SC-2	85	A 533+30	2	SB	14
SC-3	880	N3 210+45	3	NB	14
TOTAL					42

SUMMARY OF QUANTITIES

Q-1

REVISED BY	DATE REVISED
N N	2/1/12

CALCULATED-DESIGNED BY: N. NGO
CHECKED BY: D. KAO
FUNCTIONAL SUPERVISOR: EDMUND CHOY

STATE OF CALIFORNIA - DEPARTMENT OF TRANSPORTATION
Caltrans DESIGN

LAST REVISION 02-02-12
DATE PLOTTED => 16-FEB-2012
TIME PLOTTED => 09:22

Dist	COUNTY	ROUTE	POST MILES TOTAL PROJECT	SHEET No.	TOTAL SHEETS
04	Ala, SCl	85,101, 880	Var	19	42

REGISTERED ELECT ENGINEER 2/6/12 DATE

2-13-12
PLANS APPROVAL DATE

REGISTERED PROFESSIONAL ENGINEER Mahmood Noii No. 13717 Exp 6-30-13 ELEC STATE OF CALIFORNIA

THE STATE OF CALIFORNIA OR ITS OFFICERS OR AGENTS SHALL NOT BE RESPONSIBLE FOR THE ACCURACY OR COMPLETENESS OF SCANNED COPIES OF THIS PLAN SHEET.

NOTE:

FOR ACCURATE RIGHT OF WAY DATA, CONTACT RIGHT OF WAY ENGINEERING AT THE DISTRICT OFFICE.

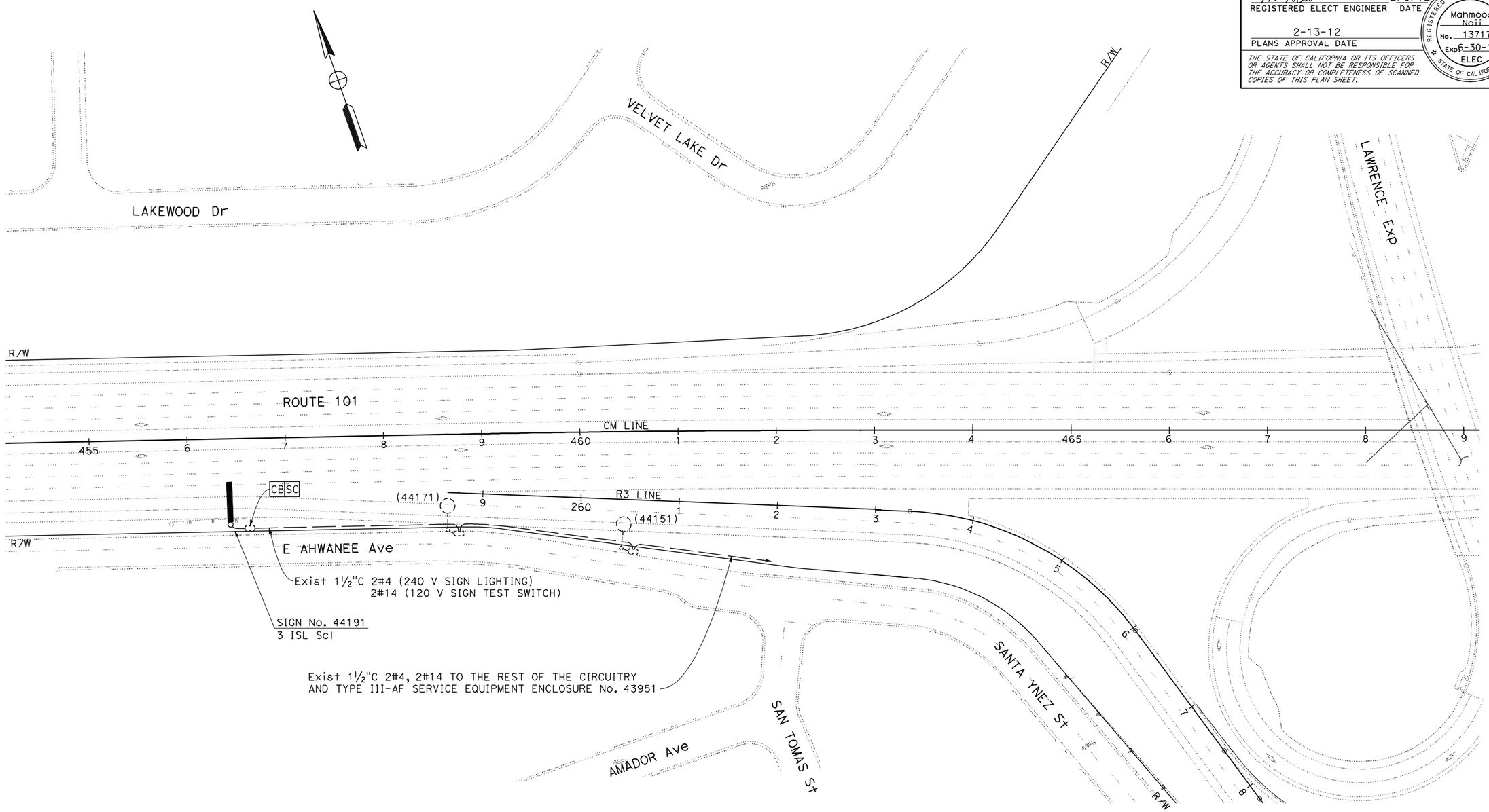

LOCOTION No. 1

OVERHEAD SIGN FOR LAWRENCE EXPRESSWAY SB OFF-RAMP

SIGN ILLUMINATION

SCALE: 1" = 50'

APPROVED FOR ELECTRICAL WORK ONLY

E-1

STATE OF CALIFORNIA - DEPARTMENT OF TRANSPORTATION

Caltrans

ELECTRICAL

FUNCTIONAL SUPERVISOR: LAI HONG CHIU

CALCULATED-DESIGNED BY: GUILLERMO F. BAUTISTA

CHECKED BY: MAHMOOD NOII

REVISED BY | DATE REVISED

LAST REVISION | DATE PLOTTED => 16-FEB-2012 | TIME PLOTTED => 09:22

02-06-12

Dist	COUNTY	ROUTE	POST MILES TOTAL PROJECT	SHEET No.	TOTAL SHEETS
04	Ala, SCl	85,101, 880	Var	20	42

REGISTERED ELECT ENGINEER 2/6/12 DATE

2-13-12
PLANS APPROVAL DATE

REGISTERED PROFESSIONAL ENGINEER Mahmood Noii No. 13717 Exp 6-30-13 ELEC STATE OF CALIFORNIA

THE STATE OF CALIFORNIA OR ITS OFFICERS OR AGENTS SHALL NOT BE RESPONSIBLE FOR THE ACCURACY OR COMPLETENESS OF SCANNED COPIES OF THIS PLAN SHEET.

NOTE:

FOR ACCURATE RIGHT OF WAY DATA, CONTACT RIGHT OF WAY ENGINEERING AT THE DISTRICT OFFICE.

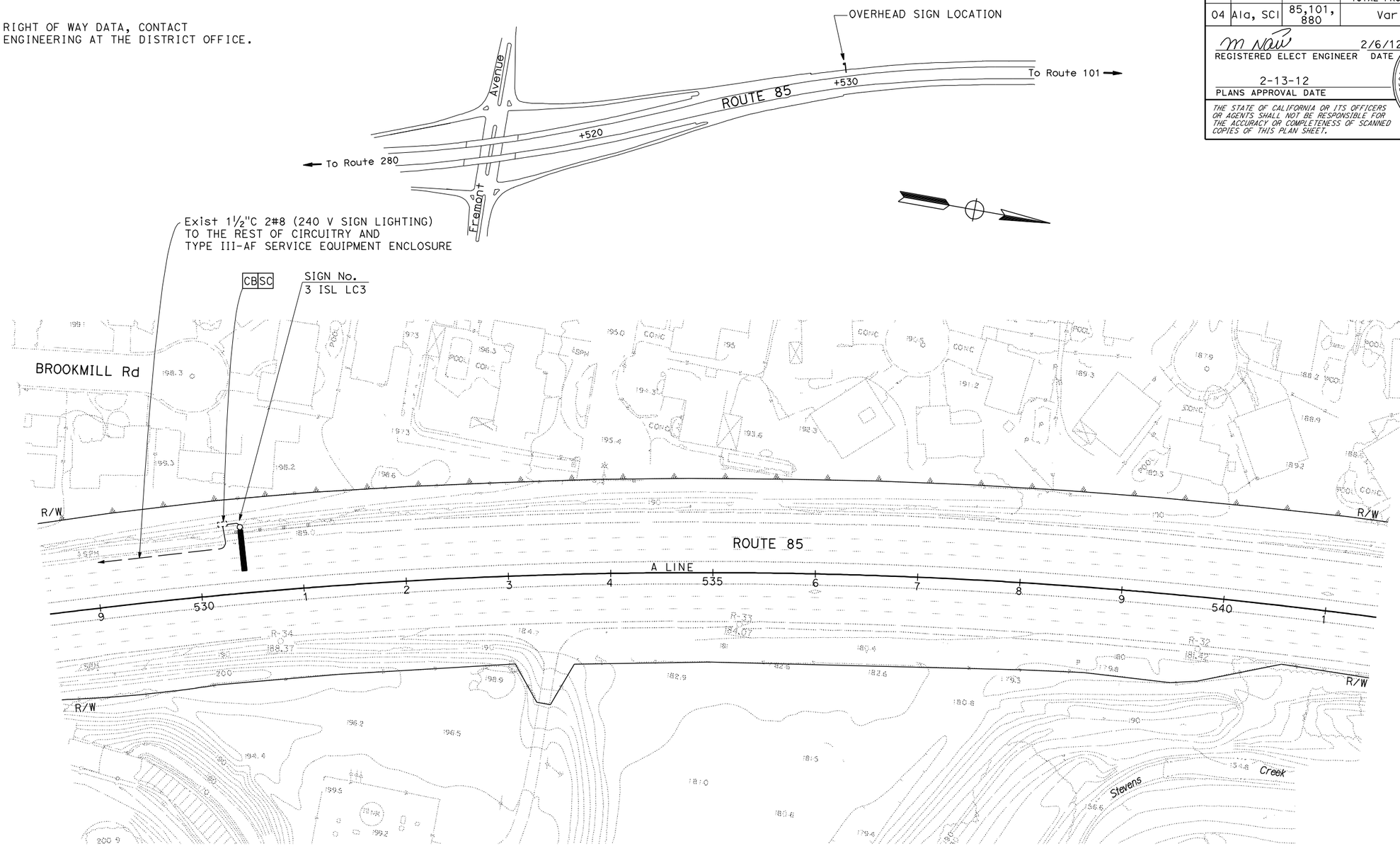

LOCATION No. 2

OVERHEAD SIGN FOR FREMONT Ave SB OFF-RAMP

SIGN ILLUMINATION

SCALE: 1" = 50'

APPROVED FOR ELECTRICAL WORK ONLY

E-2

STATE OF CALIFORNIA - DEPARTMENT OF TRANSPORTATION

Caltrans

ELECTRICAL

FUNCTIONAL SUPERVISOR: LAI HONG CHIU

CALCULATED-DESIGNED BY: GUILLERMO F. BAUTISTA

CHECKED BY: MAHMOOD NOII

REVISED BY

DATE REVISED

LAST REVISION 02-06-12

DATE PLOTTED => 16-FEB-2012
TIME PLOTTED => 09:22

BORDER LAST REVISED 7/2/2010

USERNAME => s136183
DGN FILE => 0412000003ua002.dgn

RELATIVE BORDER SCALE IS IN INCHES 0 1 2 3

UNIT 0721

PROJECT NUMBER & PHASE 04120000031

Dist	COUNTY	ROUTE	POST MILES TOTAL PROJECT	SHEET No.	TOTAL SHEETS
04	Ala, SCl	85,101, 880	Var	21	42

REGISTERED ELECT ENGINEER 2/6/12 DATE

2-13-12
PLANS APPROVAL DATE

REGISTERED PROFESSIONAL ENGINEER Mahmood Noii No. 13717 Exp 6-30-13 ELEC STATE OF CALIFORNIA

THE STATE OF CALIFORNIA OR ITS OFFICERS OR AGENTS SHALL NOT BE RESPONSIBLE FOR THE ACCURACY OR COMPLETENESS OF SCANNED COPIES OF THIS PLAN SHEET.

NOTE:

FOR ACCURATE RIGHT OF WAY DATA, CONTACT RIGHT OF WAY ENGINEERING AT THE DISTRICT OFFICE.

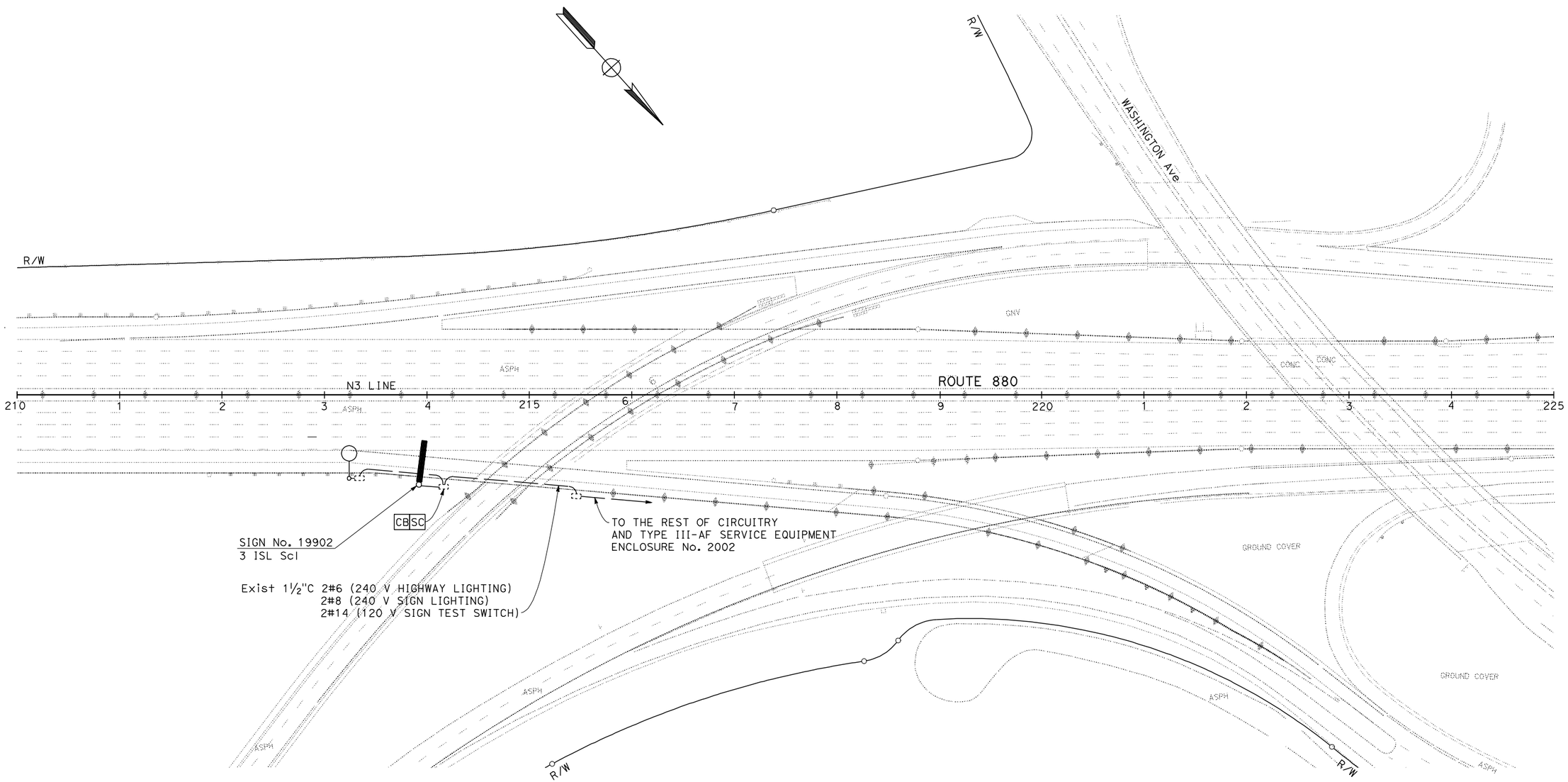

LOCATION No. 3
OVERHEAD SIGN FOR WASHINGTON Ave NB OFF-RAMP

SIGN ILLUMINATION
SCALE: 1" = 50'

APPROVED FOR ELECTRICAL WORK ONLY

E-3

STATE OF CALIFORNIA - DEPARTMENT OF TRANSPORTATION
Caltrans®
ELECTRICAL

FUNCTIONAL SUPERVISOR: LAI HONG CHIU
CALCULATED-DESIGNED BY: GUILLERMO F. BAUTISTA
CHECKED BY: MAHMOOD NOII
REVISED BY
DATE REVISED

LAST REVISION 02-06-12
DATE PLOTTED => 16-FEB-2012
TIME PLOTTED => 09:22

DIST	COUNTY	ROUTE	POST MILES TOTAL PROJECT	SHEET No	TOTAL SHEETS
04	Ala, SCl	85,101, 880	Var	22	42

REGISTERED CIVIL ENGINEER 02-10-12

2-13-12
PLANS APPROVAL DATE

REGISTERED PROFESSIONAL ENGINEER Samuel Awad No. 64589 Exp. 6-30-13 CIVIL STATE OF CALIFORNIA

The State of California or its officers or agents shall not be responsible for the accuracy or completeness of electronic copies of this plan sheet.

This LOTB sheet was prepared in accordance with the Caltrans Soil & Rock Logging, Classification, & Presentation Manual (2010 Edition).

BENCH MARK

RC-11-001
NAD83
N. 315,405.687
E. 1,546,167.127

RC-11-002
NAD83]
N. 328,352.778
E. 1,564,485.315

RC-11-003
NAD83
N. 437,324.296
E. 1,526,910.303

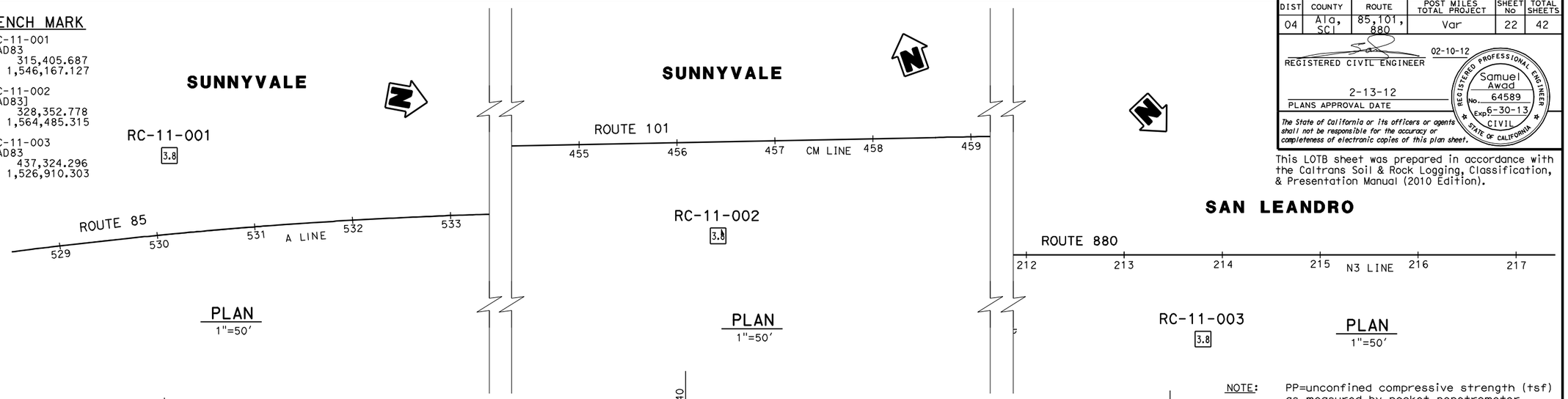

NOTE: PP=unconfined compressive strength (tsf) as measured by pocket penetrometer.

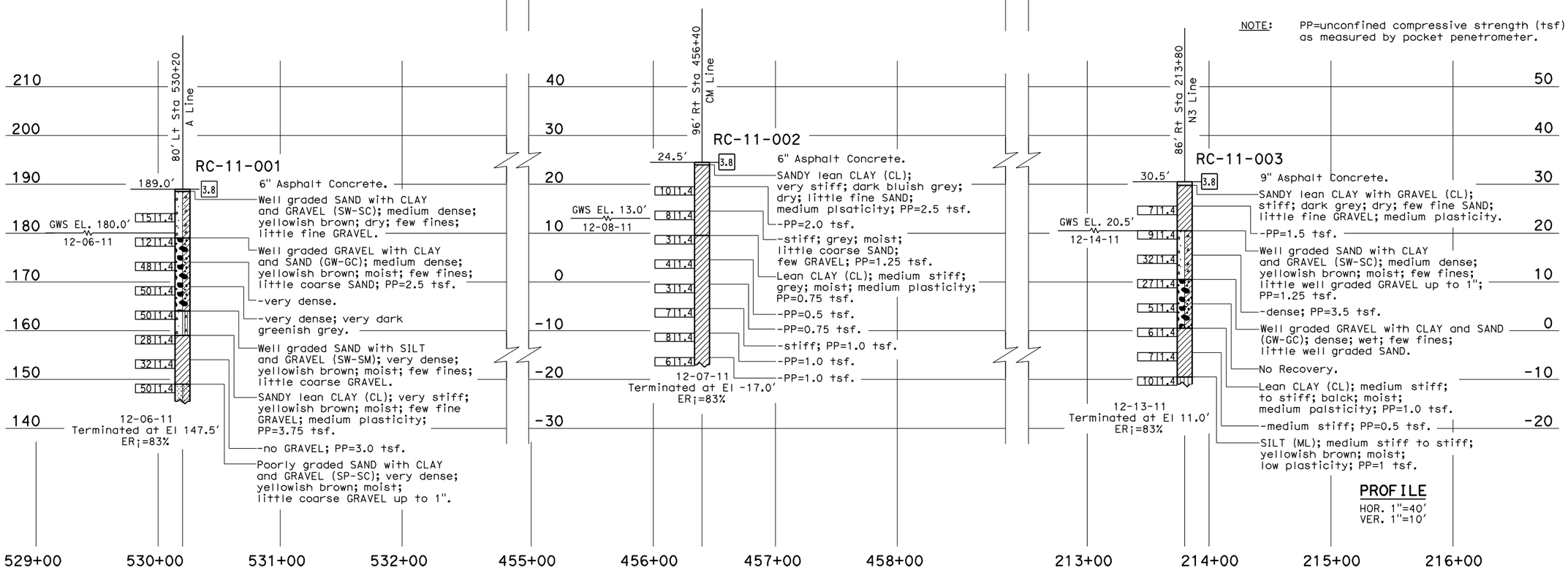

PROFILE
HOR. 1"=40'
VER. 1"=10'

ENGINEERING SERVICES	GEOTECHNICAL SERVICES	STATE OF CALIFORNIA DEPARTMENT OF TRANSPORTATION	DIVISION OF ENGINEERING SERVICES OFFICE OF GEOTECHNICAL DESIGN BRANCH	BRIDGE NO. / POST MILES 19.9/44.9	OVERHEAD SIGN LOG OF TEST BORINGS 1 of 3
FUNCTIONAL SUPERVISOR NAME: H. Nikoui	DRAWN BY: M. Reynolds 01/12 CHECKED BY: R. Karpowicz	FIELD INVESTIGATION BY: S. Awad			

ORIGINAL SCALE IN INCHES FOR REDUCED PLANS 0 1 2 3

UNIT: 3660
PROJECT NUMBER & PHASE: 04120000031 CONTRACT NO.: 04-2G5901

DISREGARD PRINTS BEARING EARLIER REVISION DATES

REVISION DATES | SHEET | OF

FILE => 0412000003ui001.dgn

USERNAME => s136183 DATE PLOTTED => 16-FEB-2012 TIME PLOTTED => 09:23

DIST	COUNTY	ROUTE	POST MILES TOTAL PROJECT	SHEET No	TOTAL SHEETS
04	Ala, SCl	85,101, 880	Var	23	42

REGISTERED CIVIL ENGINEER 02-10-12 DATE

2-13-12
PLANS APPROVAL DATE

REGISTERED PROFESSIONAL ENGINEER Samuel Awad No. 64589 Exp. 6-30-13 CIVIL STATE OF CALIFORNIA

The State of California or its officers or agents shall not be responsible for the accuracy or completeness of electronic copies of this plan sheet.

REFERENCE: CALTRANS SOIL & ROCK LOGGING, CLASSIFICATION, AND PRESENTATION MANUAL (2010)

CEMENTATION

Description	Criteria
Weak	Crumbles or breaks with handling or little finger pressure.
Moderate	Crumbles or breaks with considerable finger pressure.
Strong	Will not crumble or break with finger pressure.

BOREHOLE IDENTIFICATION

Symbol	Hole Type	Description
Size	A	Auger Boring (hollow or solid stem bucket)
Size	R RW RC P	Rotary drilled boring (conventional) Rotary drilled with self-casing wire-line Rotary core with continuously-sampled, self-casing wire-line Rotary percussion boring (air)
Size	R	Rotary drilled diamond core
Size	HD HA	Hand driven (1-inch soil tube) Hand Auger
●	D	Dynamic Cone Penetration Boring
▲	CPT	Cone Penetration Test (ASTM D 5778)
⬚	O	Other (note on LOTB)

Note: Size in inches.

CONSISTENCY OF COHESIVE SOILS

Description	Shear Strength (tsf)	Pocket Penetrometer Measurement, PP, (tsf)	Torvane Measurement, TV, (tsf)	Vane Shear Measurement, VS, (tsf)
Very Soft	Less than 0.12	Less than 0.25	Less than 0.12	Less than 0.12
Soft	0.12 - 0.25	0.25 - 0.5	0.12 - 0.25	0.12 - 0.25
Medium Stiff	0.25 - 0.5	0.5 - 1	0.25 - 0.5	0.25 - 0.5
Stiff	0.5 - 1	1 - 2	0.5 - 1	0.5 - 1
Very Stiff	1 - 2	2 - 4	1 - 2	1 - 2
Hard	Greater than 2	Greater than 4	Greater than 2	Greater than 2

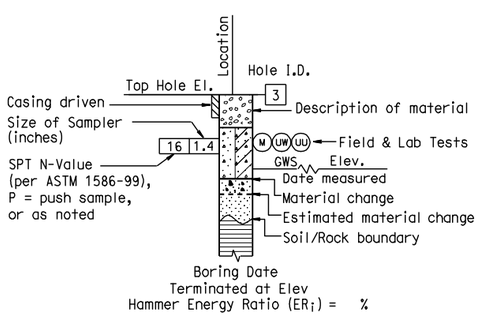

ROTARY BORING

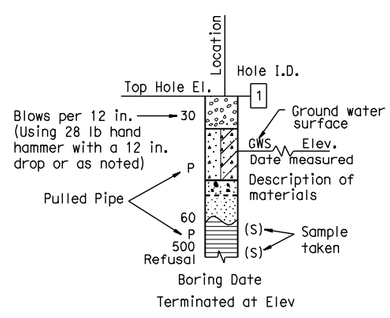

HAND BORING

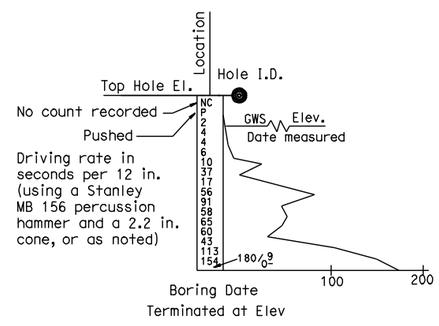

DYNAMIC CONE PENETRATION BORING

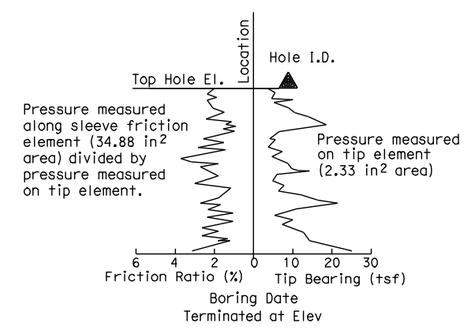

CONE PENETRATION TEST (CPT) BORING

ENGINEERING SERVICES	GEOTECHNICAL SERVICES	STATE OF CALIFORNIA DEPARTMENT OF TRANSPORTATION	DIVISION OF ENGINEERING SERVICES OFFICE OF GEOTECHNICAL DESIGN BRANCH	BRIDGE NO. / POST MILE 19.9/44.9	OVERHEAD SIGN LOG OF TEST BORINGS 2 of 3
	PREPARED BY: M. Reynolds 01/12				

GS LOTB SOIL LEGEND

ORIGINAL SCALE IN INCHES FOR REDUCED PLANS 0 1 2 3

UNIT: 3660
PROJECT NUMBER & PHASE: 04120000031 CONTRACT NO.: 04-2G5901

DISREGARD PRINTS BEARING EARLIER REVISION DATES → REVISION DATES SHEET OF

FILE => 0412000003ui002.dgn

USERNAME => s136183 DATE PLOTTED => 16-FEB-2012 TIME PLOTTED => 09:23

DIST	COUNTY	ROUTE	POST MILES TOTAL PROJECT	SHEET No	TOTAL SHEETS
04	Ala, SCl	85,101, 880	Var	24	42

REGISTERED CIVIL ENGINEER 02-10-12 DATE

2-13-12
PLANS APPROVAL DATE

REGISTERED PROFESSIONAL ENGINEER Samuel Awad No. 64589 Exp. 6-30-13 CIVIL STATE OF CALIFORNIA

The State of California or its officers or agents shall not be responsible for the accuracy or completeness of electronic copies of this plan sheet.

REFERENCE: CALTRANS SOIL & ROCK LOGGING, CLASSIFICATION, AND PRESENTATION MANUAL (2010)

GROUP SYMBOLS AND NAMES

Graphic/Symbol	Group Names
GW	Well-graded GRAVEL Well-graded GRAVEL with SAND
GP	Poorly-graded GRAVEL Poorly-graded GRAVEL with SAND
GW-GM	Well-graded GRAVEL with SILT Well-graded GRAVEL with SILT and SAND
GW-GC	Well-graded GRAVEL with CLAY (or SILTY CLAY) Well-graded GRAVEL with CLAY and SAND (or SILTY CLAY and SAND)
GP-GM	Poorly-graded GRAVEL with SILT Poorly-graded GRAVEL with SILT and SAND
GP-GC	Poorly-graded GRAVEL with CLAY (or SILTY CLAY) Poorly-graded GRAVEL with CLAY and SAND (or SILTY CLAY and SAND)
GM	SILTY GRAVEL SILTY GRAVEL with SAND
GC	CLAYEY GRAVEL CLAYEY GRAVEL with SAND
GC-GM	SILTY, CLAYEY GRAVEL SILTY, CLAYEY GRAVEL with SAND
SW	Well-graded SAND Well-graded SAND with GRAVEL
SP	Poorly-graded SAND Poorly-graded SAND with GRAVEL
SW-SM	Well-graded SAND with SILT Well-graded SAND with SILT and GRAVEL
SW-SC	Well-graded SAND with CLAY (or SILTY CLAY) Well-graded SAND with CLAY and GRAVEL (or SILTY CLAY and GRAVEL)
SP-SM	Poorly-graded SAND with SILT Poorly-graded SAND with SILT and GRAVEL
SP-SC	Poorly-graded SAND with CLAY (or SILTY CLAY) Poorly-graded SAND with CLAY and GRAVEL (or SILTY CLAY and GRAVEL)
SM	SILTY SAND SILTY SAND with GRAVEL
SC	CLAYEY SAND CLAYEY SAND with GRAVEL
SC-SM	SILTY, CLAYEY SAND SILTY, CLAYEY SAND with GRAVEL
PT	PEAT
	COBBLES COBBLES and BOULDERS BOULDERS

Graphic/Symbol	Group Names
CL	Lean CLAY Lean CLAY with SAND Lean CLAY with GRAVEL SANDY lean CLAY SANDY lean CLAY with GRAVEL GRAVELLY lean CLAY GRAVELLY lean CLAY with SAND
CL-ML	SILTY CLAY SILTY CLAY with SAND SILTY CLAY with GRAVEL SANDY SILTY CLAY SANDY SILTY CLAY with GRAVEL GRAVELLY SILTY CLAY GRAVELLY SILTY CLAY with SAND
ML	SILT SILT with SAND SILT with GRAVEL SANDY SILT SANDY SILT with GRAVEL GRAVELLY SILT GRAVELLY SILT with SAND
OL	ORGANIC lean CLAY ORGANIC lean CLAY with SAND ORGANIC lean CLAY with GRAVEL SANDY ORGANIC lean CLAY SANDY ORGANIC lean CLAY with GRAVEL GRAVELLY ORGANIC lean CLAY GRAVELLY ORGANIC lean CLAY with SAND
OL	ORGANIC SILT ORGANIC SILT with SAND ORGANIC SILT with GRAVEL SANDY ORGANIC SILT SANDY ORGANIC SILT with GRAVEL GRAVELLY ORGANIC SILT GRAVELLY ORGANIC SILT with SAND
CH	Fat CLAY Fat CLAY with SAND Fat CLAY with GRAVEL SANDY fat CLAY SANDY fat CLAY with GRAVEL GRAVELLY fat CLAY GRAVELLY fat CLAY with SAND
MH	Elastic SILT Elastic SILT with SAND Elastic SILT with GRAVEL SANDY elastic SILT SANDY elastic SILT with GRAVEL GRAVELLY elastic SILT GRAVELLY elastic SILT with SAND
OH	ORGANIC fat CLAY ORGANIC fat CLAY with SAND ORGANIC fat CLAY with GRAVEL SANDY ORGANIC fat CLAY SANDY ORGANIC fat CLAY with GRAVEL GRAVELLY ORGANIC fat CLAY GRAVELLY ORGANIC fat CLAY with SAND
OH	ORGANIC elastic SILT ORGANIC elastic SILT with SAND ORGANIC elastic SILT with GRAVEL SANDY ORGANIC elastic SILT SANDY ORGANIC elastic SILT with GRAVEL GRAVELLY ORGANIC elastic SILT GRAVELLY ORGANIC elastic SILT with SAND
OL/OH	ORGANIC SOIL ORGANIC SOIL with SAND ORGANIC SOIL with GRAVEL SANDY ORGANIC SOIL SANDY ORGANIC SOIL with GRAVEL GRAVELLY ORGANIC SOIL GRAVELLY ORGANIC SOIL with SAND

FIELD AND LABORATORY TESTING

- (C) Consolidation (ASTM D 2435)
- (CL) Collapse Potential (ASTM D 5333)
- (CP) Compaction Curve (CTM 216)
- (CR) Corrosivity Testing (CTM 643, CTM 422, CTM 417)
- (CU) Consolidated Undrained Triaxial (ASTM D 4767)
- (DS) Direct Shear (ASTM D 3080)
- (EI) Expansion Index (ASTM D 4829)
- (M) Moisture Content (ASTM D 2216)
- (OC) Organic Content-% (ASTM D 2974)
- (P) Permeability (CTM 220)
- (PA) Particle Size Analysis (ASTM D 422)
- (PI) Plasticity Index (AASHTO T 90) Liquid Limit (AASHTO T 89)
- (PL) Point Load Index (ASTM D 5731)
- (PM) Pressure Meter
- (R) R-Value (CTM 301)
- (SE) Sand Equivalent (CTM 217)
- (SG) Specific Gravity (AASHTO T 100)
- (SL) Shrinkage Limit (ASTM D 427)
- (SW) Swell Potential (ASTM D 4546)
- (UC) Unconfined Compression-Soil (ASTM D 2166) Unconfined Compression-Rock (ASTM D 2938)
- (UU) Unconsolidated Undrained Triaxial (ASTM D 2850)
- (UW) Unit Weight (ASTM D 4767)

APPARENT DENSITY OF COHESIONLESS SOILS

Description	SPT N_{60} (Blows / 12 in.)
Very Loose	0 - 5
Loose	5 - 10
Medium Dense	10 - 30
Dense	30 - 50
Very Dense	Greater than 50

MOISTURE

Description	Criteria
Dry	No discernable moisture
Moist	Moisture present, but no free water
Wet	Visible free water

PERCENT OR PROPORTION OF SOILS

Description	Criteria
Trace	Particles are present but estimated to be less than 5%
Few	5% - 10%
Little	15% - 25%
Some	30% - 45%
Mostly	50% - 100%

PARTICLE SIZE

Description		Size (in.)
Boulder		Greater than 12
Cobble		3 - 12
Gravel	Coarse	3/4 - 3
	Fine	1/5 - 3/4
Sand	Coarse	1/16 - 1/5
	Medium	1/64 - 1/16
	Fine	1/300 - 1/64
Silt and Clay		Less than 1/300

ENGINEERING SERVICES

GEOTECHNICAL SERVICES
PREPARED BY: M. Reynolds 01/12

STATE OF CALIFORNIA DEPARTMENT OF TRANSPORTATION

DIVISION OF ENGINEERING SERVICES OFFICE OF GEOTECHNICAL DESIGN BRANCH

BRIDGE NO.
POST MILE 19.9/44.9

OVERHEAD SIGN
LOG OF TEST BORINGS 3 of 3

GS LOTB SOIL LEGEND

ORIGINAL SCALE IN INCHES FOR REDUCED PLANS 0 1 2 3

UNIT: 3660
PROJECT NUMBER & PHASE: 04120000031 CONTRACT NO.: 04-2C5901

DISREGARD PRINTS BEARING EARLIER REVISION DATES

REVISION DATES SHEET OF

FILE => 0412000003ui003.dgn

USERNAME => s136183 DATE PLOTTED => 16-FEB-2012 TIME PLOTTED => 09:23

Dist	COUNTY	ROUTE	POST MILES TOTAL PROJECT	SHEET No.	TOTAL SHEETS
04	Ala,SCl	85,101, 880	Var	25	42

Randell D. Hiatt
REGISTERED CIVIL ENGINEER

May 20, 2011
PLANS APPROVAL DATE

REGISTERED PROFESSIONAL ENGINEER Randell D. Hiatt No. C50200 Exp. 6-30-11 CIVIL STATE OF CALIFORNIA

The State of California or its officers or agents shall not be responsible for the accuracy or completeness of electronic copies of this plan sheet.

To accompany plans dated 2-13-12

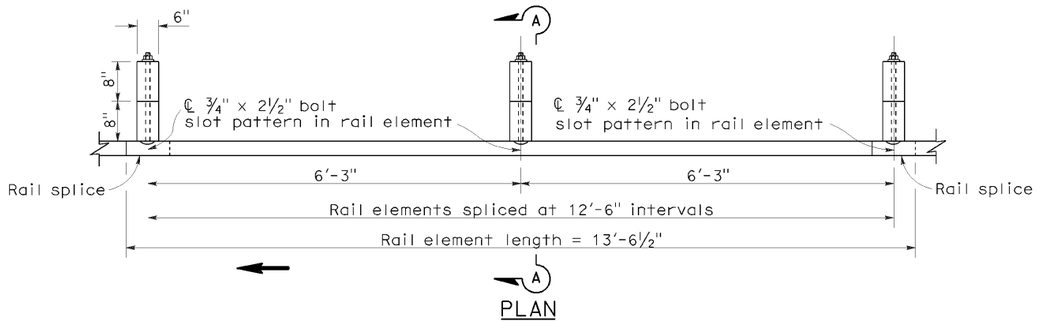

PLAN

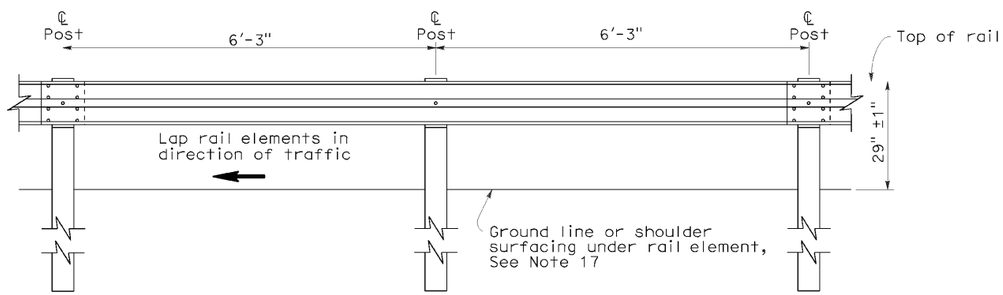

ELEVATION

METAL BEAM GUARD RAILING WITH WOOD POST AND BLOCKS

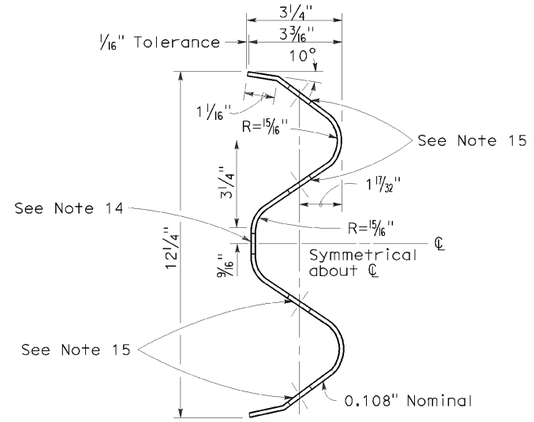

SECTION THRU RAIL ELEMENT

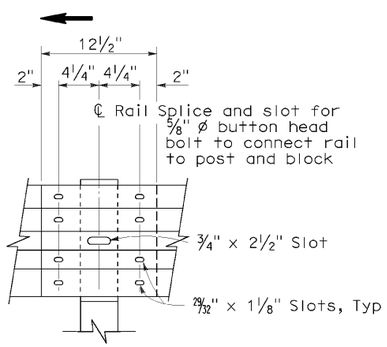

ELEVATION

RAIL ELEMENT SPLICE DETAIL

a) Connect the over lapped end of the rail elements with ⅝" ø x 1⅜" button head oval shoulder splice bolts inserted into the 29⁄32" x 1⅛" slots and bolted together with ⅝" ø recessed hex nuts. Recess of hex nut points toward rail element. A total of 8 bolts and nuts are to be used at each rail splice connection.

b) The ends of the rail elements are to be overlapped in the direction of traffic (see details).

c) Where end cap is to be attached to the end of a rail element, a total of 4 of the above described splice bolts and nuts are to be used.

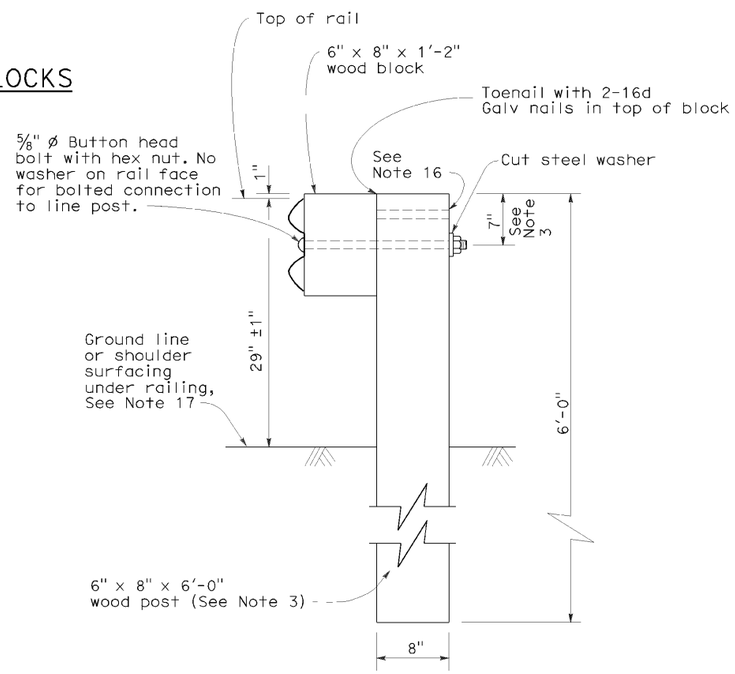

SECTION A-A

TYPICAL WOOD LINE POST INSTALLATION

See Note 4

NOTES:

1. For details of steel post installations, see Standard Plan A77A2.
2. For details of standard hardware used to construct guard railing, see Standard Plan A77B1.
3. For details of wood posts and wood blocks used to construct guard railing, see Standard Plan A77C1.
4. For additional installation details, see Standard Plan A77C3.
5. Guard railing post spacing to be 6'-3" center to center, except as otherwise noted.
6. For guard railing typical layouts, see the A77E, A77F and A77G Series of Standard Plans.
7. For terminal system end treatment details, see the A77L Series of Standard Plans. To connect railing to terminal system end treatment, transition the top of railing height at a ratio of 120:1 to terminal system end treatment height plus one 12'-6" standard railing section at the transitioned height for a horizontal connection to the end treatment.
8. For guard railing end anchor details, see Standard Plans A77H1 and A77I2.
9. For details of guard railing transition to bridge railing, see Standard Plan A77J4.
10. For additional details of guard railing connection to bridge railings, see Standard Plans A77J1, A77J2 and A77K1.
11. For guard railing connection details to abutments and walls, see Standard Plan A77J3.
12. Direction of adjacent traffic indicated by ➡.
13. For typical guard railing delineation and dike positioning details, see Standard Plan A77C4.
14. Slotted hole for bolted connection of rail element to block and post. See "Section Thru Rail Element".
15. Slotted holes for splice bolts to overlap ends of rail element. See "Section Thru Rail Element".
16. Additional hole in uppermost portion of line post is for potential future adjustments of railing height. See Standard Plan A77C1.
17. Install posts in soil.

STATE OF CALIFORNIA
DEPARTMENT OF TRANSPORTATION

METAL BEAM GUARD RAILING STANDARD RAILING SECTION (WOOD POST WITH WOOD BLOCK)

NO SCALE

RSP A77A1 DATED MAY 20, 2011 SUPERSEDES STANDARD PLAN A77A1 DATED MAY 1, 2006 - PAGE 41 OF THE STANDARD PLANS BOOK DATED MAY 2006.

REVISED STANDARD PLAN RSP A77A1

2006 REVISED STANDARD PLAN RSP A77A1

3-10-11

To accompany plans dated 2-13-12

Dist	COUNTY	ROUTE	POST MILES TOTAL PROJECT	SHEET No.	TOTAL SHEETS
04	Ala,SCl	85,101, 880	Var	26	42

Randell D. Hiatt
REGISTERED CIVIL ENGINEER

May 20, 2011
PLANS APPROVAL DATE

REGISTERED PROFESSIONAL ENGINEER
Randell D. Hiatt
No. C50200
Exp. 6-30-11
CIVIL
STATE OF CALIFORNIA

The State of California or its officers or agents shall not be responsible for the accuracy or completeness of electronic copies of this plan sheet.

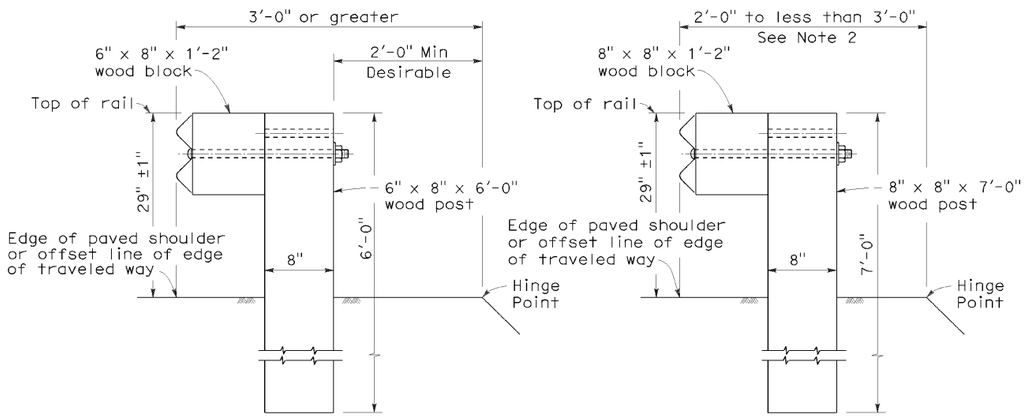

DETAIL A
TYPICAL ROADWAY INSTALLATION
See Note 1

DETAIL B
NARROW ROADWAY INSTALLATION
See Note 1

POST EMBEDMENT

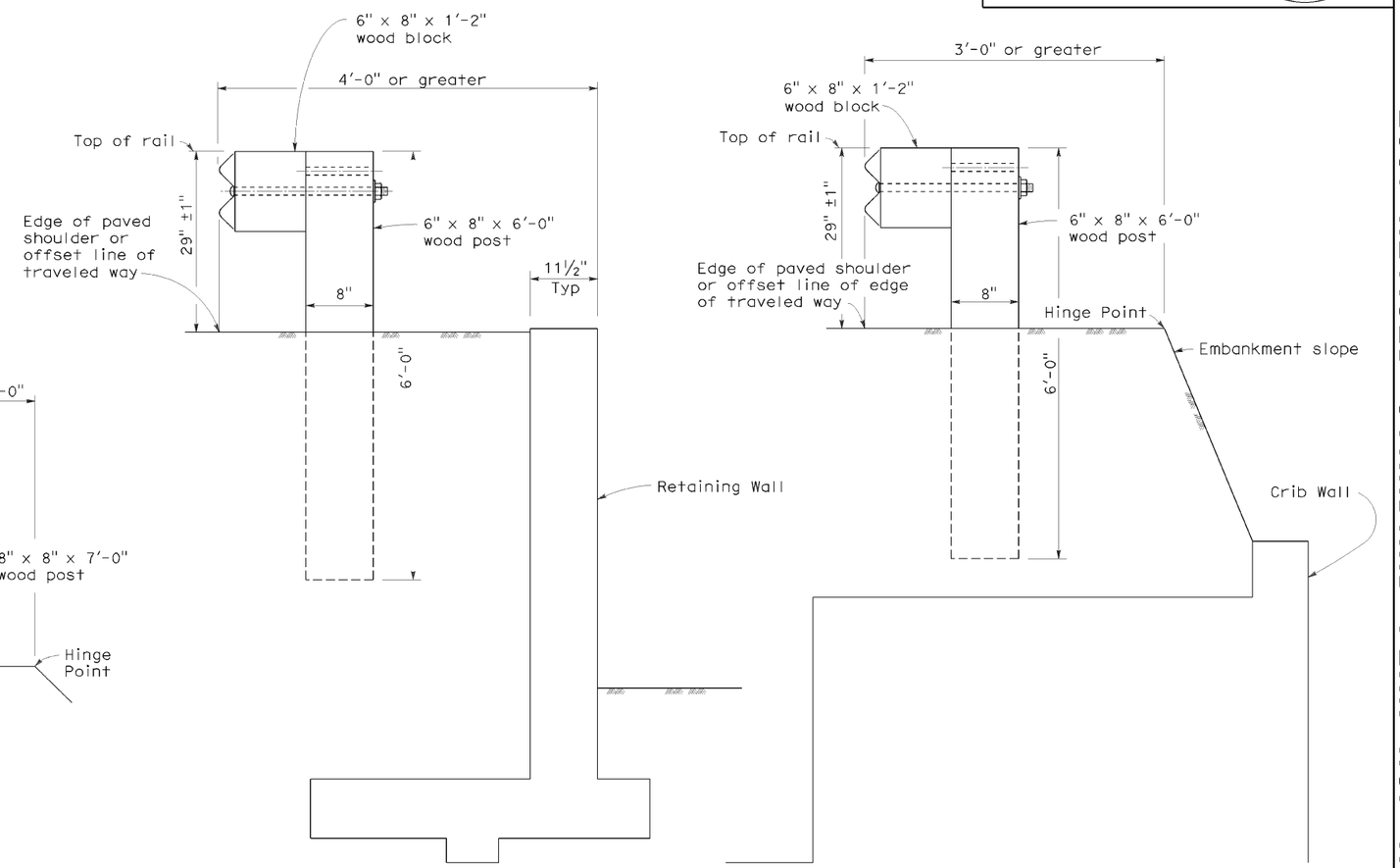

DETAIL C

DETAIL D

INSTALLATION AT EARTH RETAINING WALLS

NOTES:

1. These installation details also applicable to steel line post installations. For Detail A, C, and D, where steel line post installations are constructed, W6 x 9 steel post, 6'-0" in length, with 6" x 8" x 1'-2" notched wood blocks or notched recycled plastic blocks are to be used in place of the size of wood post and wood block shown. For Detail B, where steel line post installations are constructed, W6 x 9 steel post, 7'-0" in length, with 6" x 8" x 1'-2" notched wood blocks or notched recycled plastic blocks are to be used in place of the size of wood post and wood block shown. For additional installation details, see Standard Plans A77A1 and A77A2.
2. Where the distance between the face of the rail and the hinge point is less than 2'-0", see the Project Plans for special details.
3. For dike positioning with guard railing installations, see Standard Plan A77C4.

STATE OF CALIFORNIA
DEPARTMENT OF TRANSPORTATION

METAL BEAM GUARD RAILING TYPICAL LINE POST EMBEDMENT AND HINGE POINT OFFSET DETAILS

NO SCALE

RSP A77C3 DATED MAY 20, 2011 SUPERSEDES STANDARD PLAN A77C3
DATED MAY 1, 2006 - PAGE 46 OF THE STANDARD PLANS BOOK DATED MAY 2006.

REVISED STANDARD PLAN RSP A77C3

2006 REVISED STANDARD PLAN RSP A77C3

3-10-11

Dist	COUNTY	ROUTE	POST MILES TOTAL PROJECT	SHEET No.	TOTAL SHEETS
04	Ala,SCl	85,101, 880	Var	27	42

Randell D. Hiatt
REGISTERED CIVIL ENGINEER

May 20, 2011
PLANS APPROVAL DATE

REGISTERED PROFESSIONAL ENGINEER
Randell D. Hiatt
No. C50200
Exp. 6-30-11
CIVIL
STATE OF CALIFORNIA

The State of California or its officers or agents shall not be responsible for the accuracy or completeness of electronic copies of this plan sheet.

To accompany plans dated 2-13-12

NOTES:

1. When necessary to place dike in front of face of guard railing, only Type C dike may be used. For dike details, see Standard Plan A87B.
2. For standard railing post embedment, see Standard Plans A77C3.
3. Guard railing delineation to be used where shown on the Project Plans.
4. When dike or curb is placed under guard railing, the maximum height of the dike or curb shall be 4". Mountable dike should not be used. For dike and curb details, see Standard Plans A87A and A87B.
5. For details of typical distance between the face of rail and hinge point, see Standard Plan A77C3.
6. For steel line posts, use 1/4 - 20 self-tapping screws in 0.22" diameter holes or 1/4" bolts in 9/32" diameter holes.

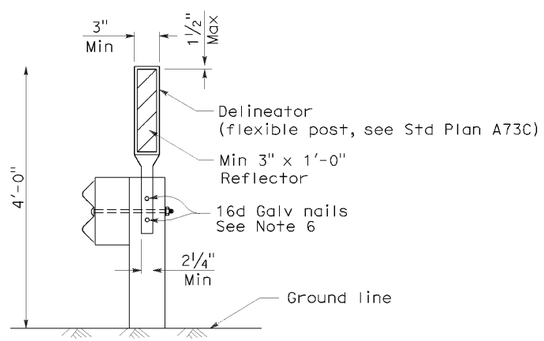

GUARD RAILING DELINEATION

See Note 3

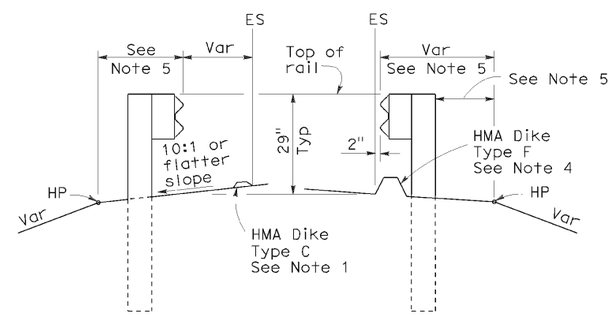

DIKE POSITIONING

See Note 1

STATE OF CALIFORNIA
DEPARTMENT OF TRANSPORTATION

METAL BEAM GUARD RAILING TYPICAL RAILING DELINEATION AND DIKE POSITIONING DETAILS

NO SCALE

RSP A77C4 DATED MAY 20, 2011 SUPERSEDES RSP A77C4 DATED JUNE 6, 2008 AND STANDARD PLAN A77C4 DATED MAY 1, 2006 - PAGE 47 OF THE STANDARD PLANS BOOK DATED MAY 2006.

REVISED STANDARD PLAN RSP A77C4

2006 REVISED STANDARD PLAN RSP A77C4

3-10-11

DIST	COUNTY	ROUTE	POST MILES TOTAL PROJECT	SHEET NO.	TOTAL SHEETS
04	Ala,SCl	85,101, 880	Var	32	42

Randell D. Hiatt
REGISTERED CIVIL ENGINEER

June 6, 2008
PLANS APPROVAL DATE

REGISTERED PROFESSIONAL ENGINEER Randell D. Hiatt No. C50200 Exp. 6-30-09 CIVIL STATE OF CALIFORNIA

The State of California or its officers or agents shall not be responsible for the accuracy or completeness of electronic copies of this plan sheet.

To accompany plans dated 2-13-12

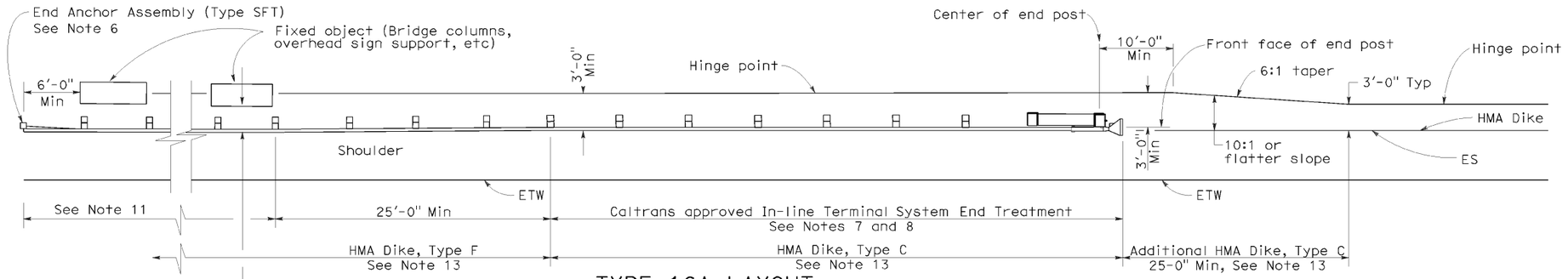

TYPE 16A LAYOUT

(GUARD RAILING INSTALLATION AT ROADSIDE FIXED OBJECT OR OBJECTS WITH AN IN-LINE END TREATMENT AT TRAFFIC APPROACH END OF RAILING)
See Notes 12 and 13

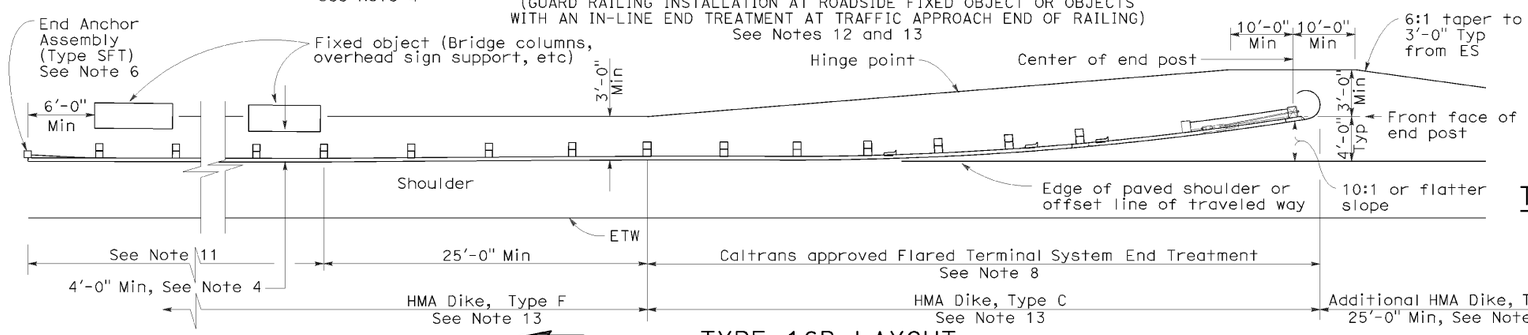

TYPE 16B LAYOUT

(GUARD RAILING INSTALLATION AT ROADSIDE FIXED OBJECT OR OBJECTS WITH A FLARED END TREATMENT AT TRAFFIC APPROACH END OF RAILING)
See Notes 12 and 13

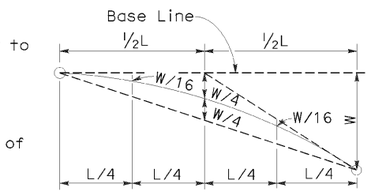

TYPICAL PARABOLIC LAYOUT

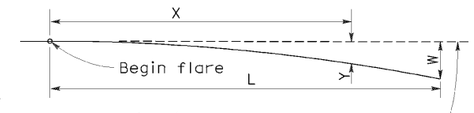

Base Line (Edge of paved shoulder or offset line of edge of traveled way)

$$Y = \frac{WX^2}{L^2}$$

Y = Offset from base line
W = Maximum offset
X = Distance along base line
L = Length of flare

PARABOLIC FLARE OFFSETS

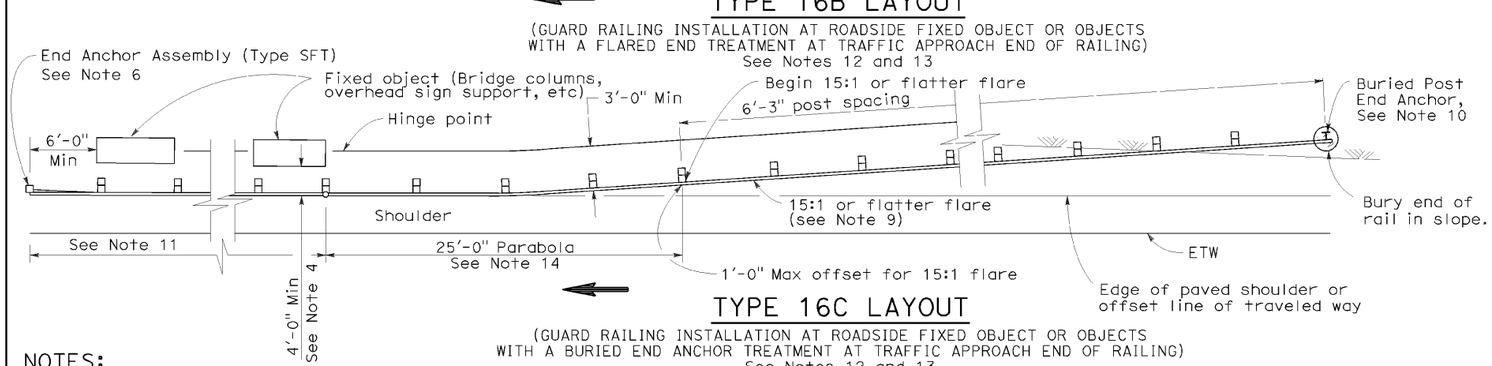

TYPE 16C LAYOUT

(GUARD RAILING INSTALLATION AT ROADSIDE FIXED OBJECT OR OBJECTS WITH A BURIED END ANCHOR TREATMENT AT TRAFFIC APPROACH END OF RAILING)
See Notes 12 and 13

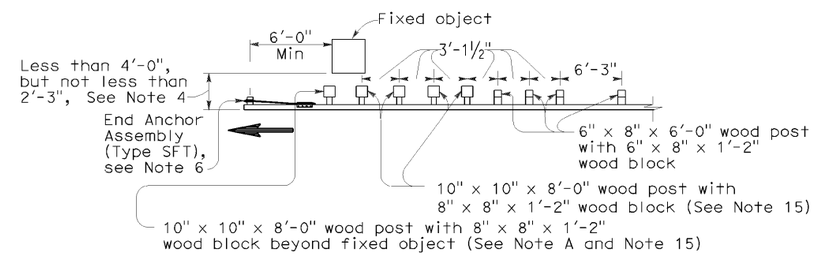

NOTE A: For a series of fixed objects (bridge columns, overhead sign supports, etc.) additional 10" x 10" x 8'-0" wood post with 8" x 8" x 1'-2" wood blocks at 3'-1½" center to center spacing are to be used between fixed objects.

STRENGTHENED RAILING SECTIONS FOR FIXED OBJECT

Use strengthened railing sections with Types 16A, 16B or 16C Layouts where minimum clearance between the face of the guard railing and fixed object(s) is less than 4'-0", but not less than 2'-3". See Note 4

NOTES:

1. Line post, blocks and hardware to be used are shown on Revised Standard Plans A77A1, A77A2, A77B1, A77C1 and A77C2.
2. Guard railing post spacing to be 6'-3" center to center, except as otherwise noted.
3. Except as noted, line posts are 6" x 8" x 6'-0" wood with 6" x 8" x 1'-2" wood blocks. W6 x 9 steel posts, 6'-0" in length, with 6" x 8" x 1'-2" notched wood blocks or notched recycled plastic blocks may be used for 6" x 8" x 6'-0" wood line posts with 6" x 8" x 1'-2" wood blocks where applicable and when specified.
4. A 4'-0" minimum clearance is required between the face of the railing and the face of a fixed object located directly behind standard guard railing sections with post spacing of 6'-3". Construct guard railing as shown in the detail "Strengthened Railing Sections for Fixed Objects" on this plan, where the clearance between the face of the railing and the face of a fixed object is less than 4'-0", but not less than 2'-3". Where the clearance is less than 2'-3", a concrete wall or barrier should be constructed to shield the fixed object(s).
5. Direction of adjacent traffic indicated by ⟶.
6. For End Anchor Assembly (Type SFT) details, see Standard Plan A77H1.
7. In-line Terminal System End Treatments are used where site conditions will not accommodate a flared end treatment.
8. The type of terminal system to be used will be shown on the Project Plans.
9. The 15:1 or flatter flare used with Type 16C Layout is based on the edge of the paved shoulder or offset line of edge of the traveled way. The length of guard railing within the 15:1 or flatter flare is based on site conditions and should be a length equal to multiples of 12'-6".
10. For details of the Buried Post End Anchor used with Type 16C Layout, see Standard Plan A77I2.
11. As site conditions dictate, construct additional guard railing to shield fixed object(s). Additional guard railing length equal to multiples of 12'-6". Post spacing at 6'-3" except as specified in Note 4.
12. Layout Types 16A, 16B or 16C are typically used where guard railing is recommended to shield roadside fixed object(s) and a crashworthy end treatment is required for only one direction of traffic.
13. Where placement of dike is required with guard railing, see Revised Standard Plan RSP A77C4 for dike positioning details.
14. For typical flare offsets for 25'-0" length parabola with maximum offset of 1'-0", see Revised Standard Plan RSP A77E1.
15. W6 x 15 steel post, 8'-0" in length, with 8" x 8" x 1'-2" notched wood block or notched recycled plastic blocks may be used in place of the 10" x 10" x 8'-0" wood post with 8" x 8" x 1'-2" wood block shown in the "Strengthened Railing Sections Detail".

STATE OF CALIFORNIA
DEPARTMENT OF TRANSPORTATION

METAL BEAM GUARD RAILING TYPICAL LAYOUTS FOR ROADSIDE FIXED OBJECTS

NO SCALE

RSP A77G3 DATED JUNE 6, 2008 SUPERSEDES STANDARD PLAN A77G3 DATED MAY 1, 2006 - PAGE 61 OF THE STANDARD PLANS BOOK DATED MAY 2006.

REVISED STANDARD PLAN RSP A77G3

2006 REVISED STANDARD PLAN RSP A77G3

12-10-07

Dist	COUNTY	ROUTE	POST MILES TOTAL PROJECT	SHEET No.	TOTAL SHEETS
04	Ala,SCl	85,101, 880	Var	33	42

Randell D. Hiatt
REGISTERED CIVIL ENGINEER

May 20, 2011
PLANS APPROVAL DATE

REGISTERED PROFESSIONAL ENGINEER
Randell D. Hiatt
No. C50200
Exp. 6-30-11
CIVIL
STATE OF CALIFORNIA

The State of California or its officers or agents shall not be responsible for the accuracy or completeness of electronic copies of this plan sheet.

To accompany plans dated 2-13-12

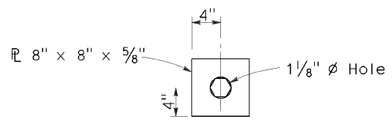

DETAIL A
CABLE CONNECTION
END PLATE

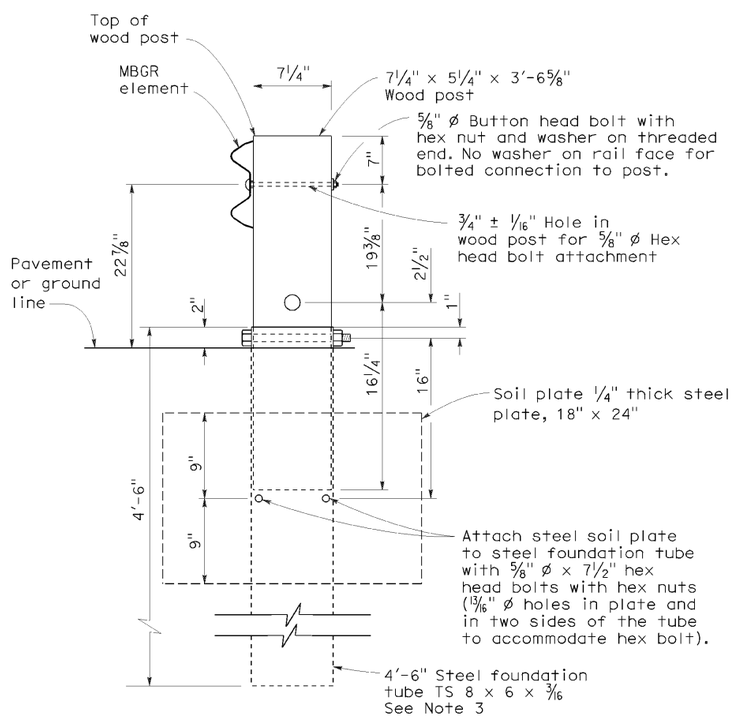

SECTION A-A

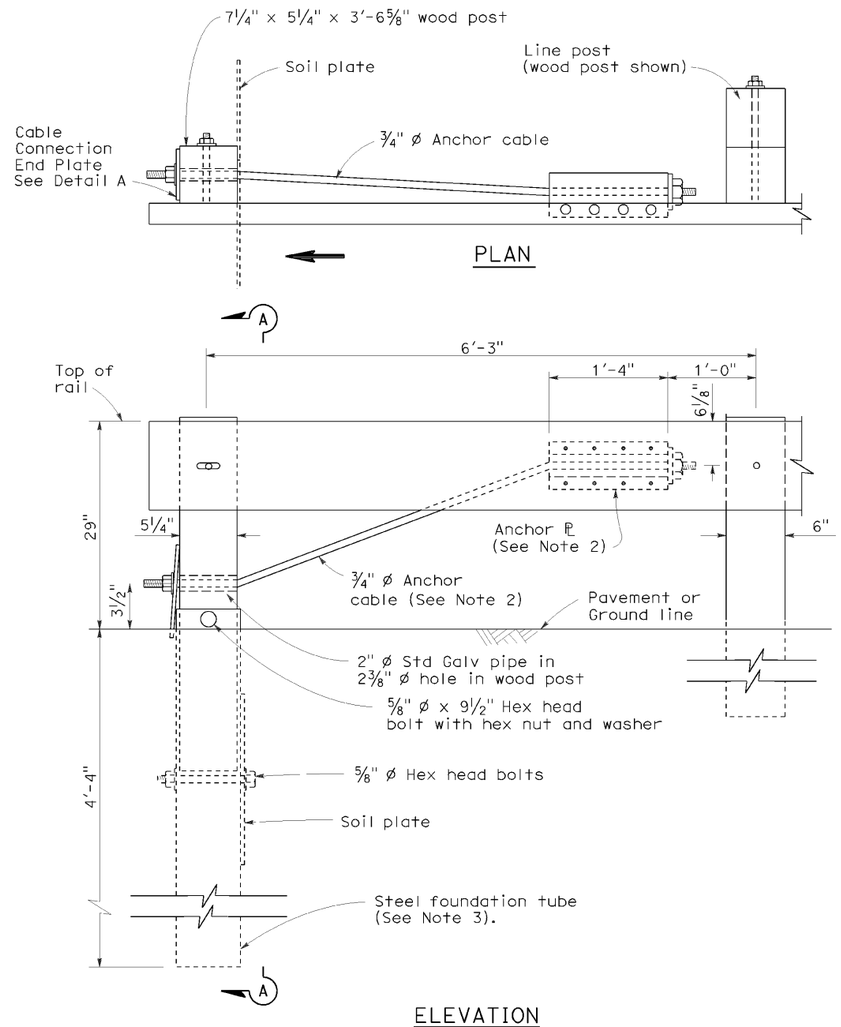

ELEVATION
END ANCHOR
ASSEMBLY (TYPE SFT)
See Note 1

NOTES:

1. See the A77E, A77F and A77G series of Standard Plans for typical use of End Anchor Assembly (Type SFT).
2. For details of the anchor plate and 3/4" cable, see Standard Plan A77H3.
3. A 6'-0" length steel foundation tube, TS 8 x 6 x 3/16, without a soil plate, may be furnished and installed in place of the 4'-6" length steel foundation tube and soil plate shown. Minimum embedment of the 6'-0" length tube shall be 5'-9". A 5/8" ø hex head bolt and nut shall be installed in the hole in the 6'-0" length tube to keep the wood post from dropping into the tube.
4. Direction of traffic indicated by →.
5. Install line post, steel foundation tube and soil plate in soil.

STATE OF CALIFORNIA
DEPARTMENT OF TRANSPORTATION

METAL RAILING END ANCHOR ASSEMBLY (TYPE SFT)

NO SCALE

RSP A77H1 DATED MAY 20, 2011 SUPERSEDES STANDARD PLAN A77H1
DATED MAY 1, 2006 - PAGE 67 OF THE STANDARD PLANS BOOK DATED MAY 2006.

REVISED STANDARD PLAN RSP A77H1

2006 REVISED STANDARD PLAN RSP A77H1

DIST	COUNTY	ROUTE	POST MILES TOTAL PROJECT	SHEET NO.	TOTAL SHEETS
04	Ala,SCl	85,101, 880	Var	34	42

Randell D. Hiatt
REGISTERED CIVIL ENGINEER

June 6, 2008
PLANS APPROVAL DATE

REGISTERED PROFESSIONAL ENGINEER Randell D. Hiatt No. C50200 Exp. 6-30-09 CIVIL STATE OF CALIFORNIA

The State of California or its officers or agents shall not be responsible for the accuracy or completeness of electronic copies of this plan sheet.

To accompany plans dated 2-13-12

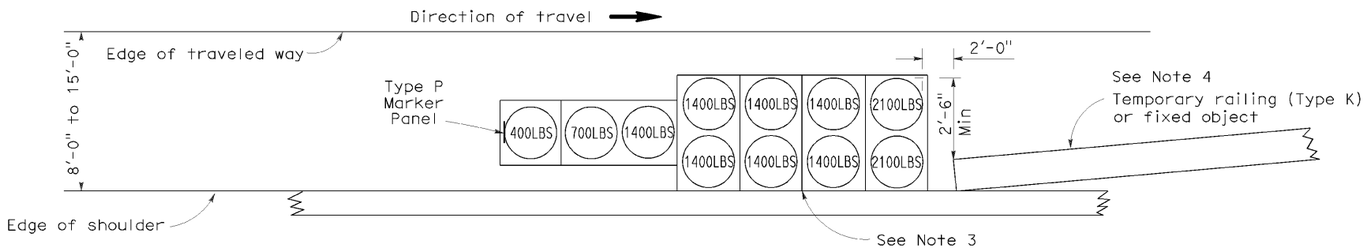

ARRAY 'TS11'

Approach speed less than 45 mph
See Note 9

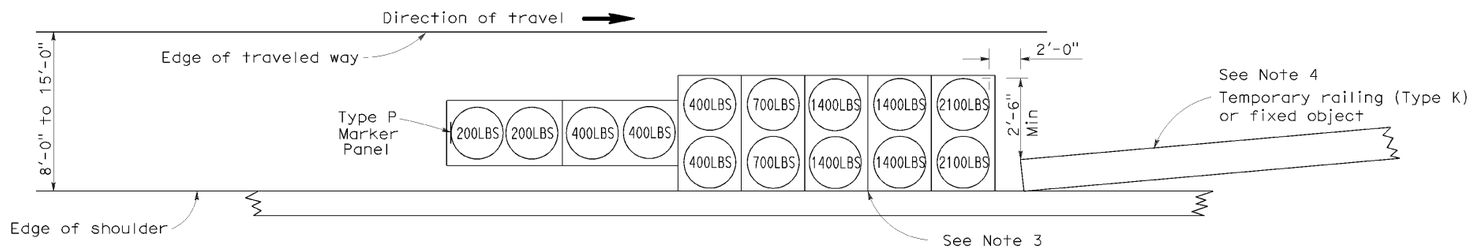

ARRAY 'TS14'

Approach speed 45 mph or more
See Note 9

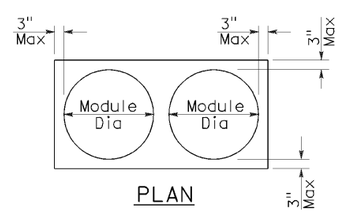

PLAN

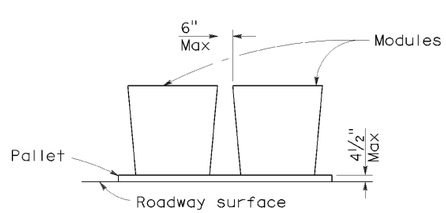

ELEVATION

CRASH CUSHION PALLET DETAIL

See Note 11

NOTES:

1. (XXX) Indicates sand filled module location and weight of sand in pounds for each module. Module spacing is based on the greater diameter of the module.
2. All sand weights are nominal.
3. The temporary crash cushion arrays shown on this plan shall be used only in locations where there will be traffic on one side of the temporary crash cushion array.
4. If the fixed object or approach end of the temporary railing is less than 15'-0" from the edge of traveled way, a temporary crash cushion is required in a construction or work zone.
5. Temporary crash cushion arrays shall not encroach on the traveled way.
6. Arrays for median shoulders shall conform to details shown on this plan for outside shoulders.
7. Place the Type P marker panel so that the bottom of the panel rests upon the pallet and faces traffic.
8. Refer to Standard Plan A73B for marker details.
9. For shoulder widths less than 8'-0", appropriate approved crash cushion protection, other than sand filled modules, shall be provided at fixed objects and at approach ends of temporary railing. The specific type of crash cushion shall be as shown on the project plans or as specified in the Special Provisions, or if not shown on the project plans or specified in the Special Provisions, shall be as approved by the Engineer.
10. Approach speeds indicated conform to NCHRP 350 Report criteria.
11. Use of pallets is optional.

STATE OF CALIFORNIA
DEPARTMENT OF TRANSPORTATION

TEMPORARY CRASH CUSHION, SAND FILLED (SHOULDER INSTALLATIONS)

NO SCALE

RSP T2 DATED JUNE 6, 2008 SUPERSEDES STANDARD PLAN T2
DATED MAY 1, 2006 - PAGE 213 OF THE STANDARD PLANS BOOK DATED MAY 2006.

REVISED STANDARD PLAN RSP T2

2006 REVISED STANDARD PLAN RSP T2

5-15-08

DIST	COUNTY	ROUTE	POST MILES TOTAL PROJECT	SHEET NO.	TOTAL SHEETS
04	Ala,SCl	85,101, 880	Var	39	42

REGISTERED ELECTRICAL ENGINEER

October 5, 2007
PLANS APPROVAL DATE

REGISTERED PROFESSIONAL ENGINEER Jeffery G. McRae No. E14512 Exp. 6-30-08 ELECTRICAL STATE OF CALIFORNIA

The State of California or its officers or agents shall not be responsible for the accuracy or completeness of electronic copies of this plan sheet.

To accompany plans dated 2-13-12

ELECTROLIERS

STANDARD TYPES
15, 15D
15 STRUCTURE
21, 21D STRUCTURE
30
31
32
35
36-20A

High mast light pole

Double Arm lighting standard

Existing electrolier

Electrolier foundation (Future installation)

NOTES:

1. Luminaires shall be 310 W HPS when installed on Type 21, 21D, 30, 31, 32, 35 and 36-20A Standards, unless otherwise specified. Luminaires shall be 200 W HPS when installed on other type standards or poles, unless otherwise specified.
2. Luminaires shall be the cutoff type, ANSI Type III medium cutoff lighting distribution, unless otherwise specified.
3. Variations noted adjacent to symbol on project plans.

Electrolier (see project notes or project plans)

Luminaire on wood pole

STANDARD NOTES:

- AB Abandon. If applied to conduit, remove conductors.
- BC Install pull box in existing conduit run.
- BP Pedestrian barricade, type as indicated on plan.
- CB Install conduit into existing pull box.
- CC Connect new and existing conduit. Remove existing conductors and install conductors as indicated.
- CF Conduit to remain for future use. Remove conductors. Install pull wire or rope.
- DH Detector handhole.
- FA Foundation to be abandoned.
- IS Install sign on signal mast arm.
- NS No slip base on standard.
- PEC Photoelectric control.
- PEU Photoelectric unit.
- RC Equipment or material to be removed and become the property of the Contractor.
- RE Remove electrolier, fuses and ballast. Tape ends of conductors.
- RL Relocate equipment.
- RR Remove and reuse equipment.
- RS Remove and salvage equipment.
- SC Splice new to existing conductors.
- SD Service disconnect.
- SF Standard to remain for future use. Remove luminaire, pole conductors, fuses and ballast.
- TSP Telephone service point.

ABBREVIATIONS AND EQUIPMENT DESIGNATIONS

PROPOSED	EXISTING	
BBS	bbs	Battery backup system
BC	bc	Bolt circle
C	C	Conduit
CCTV	cctv	Closed circuit television
CKT	ckt	Circuit
CMS	cms	Changeable message sign
DLC	dlc	Loop detector lead-in cable
EMS	ems	Extinguishable message sign
EVC	evc	Emergency vehicle cable
EVD	evd	Emergency vehicle detector
FB	fb	Flashing beacon
FBCA	fbca	Flashing beacon control assembly
FBS	fbs	Flashing beacon with slip base
FO	fo	Fiber optic
G	G	Ground (Equipment Grounding Conductor)
GFCI	GFCI	Ground fault circuit interrupt
HAR	har	Highway advisory radio
HEX	hex	Hexagonal
HPS	hps	High pressure sodium
IISNS	iisns	Internally illuminated street name sign
ISL	isl	Induction sign lighting
LED	led	Light emitting diode
LMA	lma	Luminaire mast arm
LPS	lps	Low pressure sodium
LTG	ltg	Lighting
LUM	lum	Luminaire
MAT	mat	Mast arm mounting vehicle signal faces, top attachment
MAS	mas	Mast arm mounting vehicle signal faces, side attachment
MAS-4A MAS-4B MAS-4C	mas-4A mas-4B mas-4C	Mast arm mounting vehicle signal faces, side attachment - 4 signal section
MAS-5A MAS-5B	mas-5A mas-5B	Mast arm mounting vehicle signal faces, side attachment - 5 signal section
MC	mc	Mercury contactor
M/M	m/m	Multiple to multiple transformer
MT	mt	Conduit with pull wire or rope only
MTG	mtg	Mounting
	mv	Mercury vapor lighting fixture
N	N	Neutral (Grounded Conductor)
NC	NC	Normally closed
NO	NO	Normally open
PB	pb	Pull box
PEC	pec	Photoelectric control (Type I, II, III, IV or V as shown)
PED	ped	Pedestrian
PEU	peu	Photoelectric unit
PPB	ppb	Pedestrian push button
RL		Relocated equipment
RM	rm	Ramp metering
SB	sb	Slip base
SIC	sic	Signal interconnect cable
SIG	sig	Signal
SMA	sma	Signal mast arm
SNS	sns	Street name sign
SP	sp	Service point
TDC	tdc	Telephone demarcation cabinet
TMS	tms	Traffic monitoring station
TOS	tos	Traffic Operations System
VEH	veh	Vehicle
XFMR	xfmr	Transformer
COMM	comm	Communication
RWIS	rwis	Roadway weather information system

SOFFIT AND WALL MOUNTED LUMINAIRES

Pendant, 70 W HPS unless otherwise specified.

Flush, 70 W HPS unless otherwise specified.

Wall surface, 70 W HPS unless otherwise specified.

Existing soffit or wall luminaire to remain unmodified.

Existing soffit or wall luminaire to be modified as specified.

NOTE:

Arrow indicates "street side" of luminaire.

STATE OF CALIFORNIA
DEPARTMENT OF TRANSPORTATION

ELECTRICAL SYSTEMS (SYMBOLS AND ABBREVIATIONS)

NO SCALE

RSP ES-1A DATED OCTOBER 5, 2007 SUPERSEDES STANDARD PLAN ES-1A DATED MAY 1, 2006 - PAGE 400 OF THE STANDARD PLANS BOOK DATED MAY 2006.

REVISED STANDARD PLAN RSP ES-1A

2006 REVISED STANDARD PLAN RSP ES-1A

DIST	COUNTY	ROUTE	POST MILES TOTAL PROJECT	SHEET NO.	TOTAL SHEETS
04	Ala,SCl	85,101, 880	Var	40	42

REGISTERED ELECTRICAL ENGINEER

October 5, 2007
PLANS APPROVAL DATE

REGISTERED PROFESSIONAL ENGINEER Jeffery G. McRae No. E14512 Exp. 6-30-08 ELECTRICAL STATE OF CALIFORNIA

The State of California or its officers or agents shall not be responsible for the accuracy or completeness of electronic copies of this plan sheet.

To accompany plans dated 2-13-12

CONDUIT

PROPOSED	EXISTING	
		Lighting Conduit, unless otherwise indicated or noted
		Traffic signal conduit
C	c	Communication conduit
T	t	Telephone conduit
F	f	Fire alarm conduit
FO	fo	Fiber optic conduit
		Conduit termination (RSP ES-9A C)
R	r	Conduit riser in/on structure or service pole

SERVICE EQUIPMENT

PROPOSED	EXISTING	
OH	oh	Overhead lines
U	U	Wood pole "U" indicates utility owned
		Pole guy with anchor
		Utility transformer - ground mounted
III		Service equipment enclosure type
		Service equipment enclosure door indicates front of enclosure
T	t	Telephone demarcation cabinet

POLE-MOUNTED SERVICE DESIGNATION

Type of installation

TYPE H SERVICE - 28'-10" ← Pole height above grade

ILLUMINATED OVERHEAD SIGN

PROPOSED	EXISTING	
		Overhead sign - Single post
		Overhead sign - Two post
		Overhead sign - Mounted on structure
		Overhead sign with electrolier

SIGNAL EQUIPMENT

PROPOSED	EXISTING	
		Pedestrian signal face
		Pedestrian push button post
		Pedestrian barricade
		Vehicle signal face (with backplate, 3-Section: red, yellow and green)
		Vehicle signal face with angle visors
PV	PV	Modifications of basic symbols: "L" Indicates all non-arrow sections louvered "LG" Indicates louvered green section only "PV" Indicates 12" programmed visibility sections "8" indicates all 8" sections (only when specified)
		Type 15TS and Vehicle signal face
		Vehicle signal face with red, yellow and green left arrow sections
		Vehicle signal face with red and yellow sections and up green arrow
		Vehicle signal face (5 Section) with red, yellow and green sections and yellow and green right arrows
		Type 1 Standard and attached vehicle signal faces
		Standard with signal mast arm only and attached vehicle signal faces and internally illuminated street name sign
		Type 33 Standard, Left-turn vehicle signal face and sign
		Standard with luminaire and signal mast arms and attached vehicle signal faces
		Cantilever flashing beacon Type 9 Frame, with a sign unless otherwise specified or indicated
		Type 15-FBS Standard with two vehicle signal face sections with lens, backplate and visor with a sign
R	Y	Flashing beacon. One vehicle signal face section with lens, backplate and visor. "R" indicates red indication, "Y" indicates yellow indication
		Controller assembly. Door indicates front of cabinet

SIGNAL EQUIPMENT Cont

PROPOSED	EXISTING	
		Guard post
		Type 1 Standard with "Meter On" sign
		Emergency Vehicle detector

NOTES:

1. All signal sections shall be 12" unless shown otherwise.
2. Signal heads shall be provided with backplates unless shown otherwise.
3. Signal indication shall be LED.

STATE OF CALIFORNIA
DEPARTMENT OF TRANSPORTATION

ELECTRICAL SYSTEMS (SYMBOLS AND ABBREVIATIONS)

NO SCALE

RSP ES-1B DATED OCTOBER 5, 2007 SUPERCEDES STANDARD PLAN ES-1B DATED MAY 1, 2006 - PAGE 401 OF THE STANDARD PLANS BOOK DATED MAY 2006.

REVISED STANDARD PLAN RSP ES-1B

2006 REVISED STANDARD PLAN RSP ES-1B

DIST	COUNTY	ROUTE	POST MILES TOTAL PROJECT	SHEET NO.	TOTAL SHEETS
04	Ala,SCl	85,101, 880	Var	41	42

Jeffery G. McRae
REGISTERED ELECTRICAL ENGINEER

October 5, 2007
PLANS APPROVAL DATE

REGISTERED PROFESSIONAL ENGINEER
Jeffery G. McRae
No. E14512
Exp. 6-30-08
ELECTRICAL
STATE OF CALIFORNIA

The State of California or its officers or agents shall not be responsible for the accuracy or completeness of electronic copies of this plan sheet.

To accompany plans dated 2-13-12

EQUIPMENT IDENTIFICATION

ILLUMINATED SIGN IDENTIFICATION NUMBER:

Sign No. 12345 — Sign number - Place on post or structure

10 ISL SCl 1.0

- 10 — Transformer rating (kVA)
- ISL — Lighting control type
- 1.0 — Number and type of fixtures

Do NOT place on standard or structure

ELECTROLIER OR EQUIPMENT IDENTIFICATION NUMBER:

12345 - 15'-0"

- 15'-0" — Mast arm length, if shown. Do not place on standard or structure.
- 12345 — Equipment number - Place on standard or structure. Existing equipment numbers are shown in parenthesis

CONDUIT AND CONDUCTOR IDENTIFICATION:

1½"C, 2#10, 15#14, 2 DLC

- 2#10, 15#14, 2 DLC — Number and size of conductors and cables
- 1½"C — Size of conduit in inches

Ø1, Ø2, Ø2P, etc.	Traffic phase identification for signal faces, detectors and phase diagrams
1 2 3	Project note numbers
A B C	Equipment description, installation or item numbers
1 2 3	Conduit run numbers

SIGNAL AND LIGHTING STANDARD (TYPICAL DESIGNATION):

19A - 3 - 100

- 100 — Wind velocity = 100 mph
- 3 — Case 3 arm loading
- 19A — Standard type
- Standard Plan sheet number
- Detail number or letter

MISCELLANEOUS EQUIPMENT

PROPOSED	EXISTING	
CMS	cms	Changeable message sign
		Closed circuit television camera
		Highway advisory radio pole and antenna
EMS	ems	Extinguishable message sign
M V	m v	Detection device M = Microwave sensor V = Video image sensor

WIRING DIAGRAM LEGEND

P	Pole
CB	Circuit breaker
A	Ampere
V	Volt
M	Metered
UM	Unmetered
NB	Neutral bus
GB	Ground bus
G	Equipment grounding conductor
N	Grounded conductor (Neutral)

- External conductor
- Conductor or bus
- Tie point
- Contactor coil
- Contactor, Contact NO
- Terminal blocks
- Contactor, Contact NC
- Enclosure bond
- Grounding electrode
- Circuit breaker
- Receptacle

PULL BOXES

PROPOSED — EXISTING

Pull box-No. 5 unless otherwise indicated or noted.

3 — 9A(21)

Pull box-Additional designations or descriptions

3	= No. 3½ pull box
5	= No. 5 pull box
6	= No. 6 pull box
7	= No. 7 (Ceiling pull box)
8	= No. 8 (Pendant soffit pull box)
9	= No. 9 pull box
9A	= No. 9A pull box

- (C) = Communications pull box
- (E) = Pull box with extension
- (S) = Sprinkler control pull box
- (21) = Anchor bolts and conduit for future installation of Type 21 Standard
- (T) = Traffic pull box

VEHICLE DETECTORS

5 J 9 U

- U — Vehicle detector designation
- U = Upper, L = Lower
- 9 — Slot number in input file
- J — Input file (I or J)
- 5 — Phase

PROPOSED — EXISTING

	Type A detector loop. Outline of sawcut shown.
	Type B detector loop. Outline of sawcut shown.
	Type C detector loop. Outline of sawcut shown.
	Type D detector loop. Outline of sawcut shown.
	Type E detector loop. Outline of sawcut shown.
	Type Q detector loop. Outline of sawcut shown.
	Magnetic detector
DH / dh	Detector handhole
	Microwave or video detection zone

STATE OF CALIFORNIA
DEPARTMENT OF TRANSPORTATION

ELECTRICAL SYSTEMS (SYMBOLS AND ABBREVIATIONS)

NO SCALE

RSP ES-1C DATED OCTOBER 5, 2007 SUPERCEDES STANDARD PLAN ES-1C DATED MAY 1, 2006 - PAGE 402 OF THE STANDARD PLANS BOOK DATED MAY 2006.

REVISED STANDARD PLAN RSP ES-1C

2006 REVISED STANDARD PLAN RSP ES-1C

DIST	COUNTY	ROUTE	POST MILES TOTAL PROJECT	SHEET NO.	TOTAL SHEETS
04	Ala,SCl	85,101, 880	Var	42	42

REGISTERED ELECTRICAL ENGINEER

October 5, 2007
PLANS APPROVAL DATE

REGISTERED PROFESSIONAL ENGINEER Jeffery G. McRae No. E14512 Exp. 6-30-08 ELECTRICAL STATE OF CALIFORNIA

The State of California or its officers or agents shall not be responsible for the accuracy or completeness of electronic copies of this plan sheet.

To accompany plans dated 2-13-12

NOTES: (FOR LIGHTING AND SIGN ILLUMINATION CONTROL)

1. The ballast voltages of lighting fixtures and luminaires shall match line service voltages.
2. Voltage rating of photoelectric controls shall conform to the service voltage indicated on the plans.
3. Terminal strip shall be provided for wiring to fixtures.
4. Type SC1A, SC2A, SC3A controls are similar to Types SC1, SC2 and SC3 controls respectively except test switch and wiring are not required.

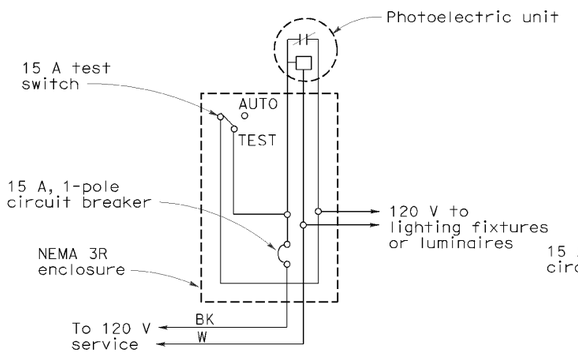

TYPE LC1 CONTROL

For 120 V unswitched circuit with no more than 800 W load.

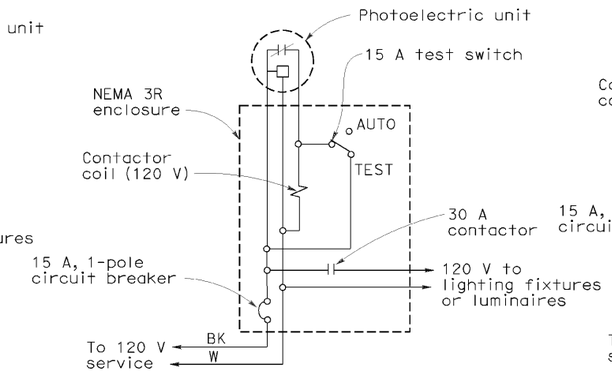

TYPE LC2 CONTROL

For 120 V unswitched circuit

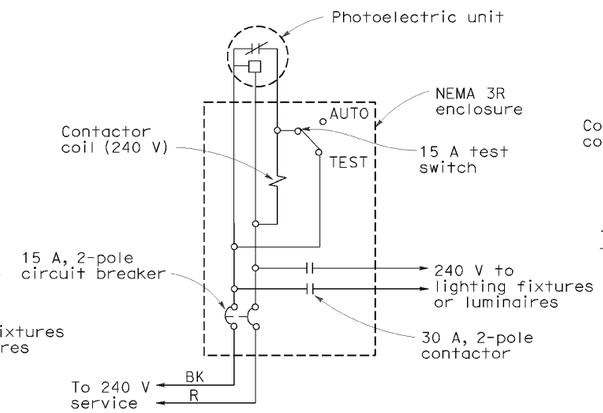

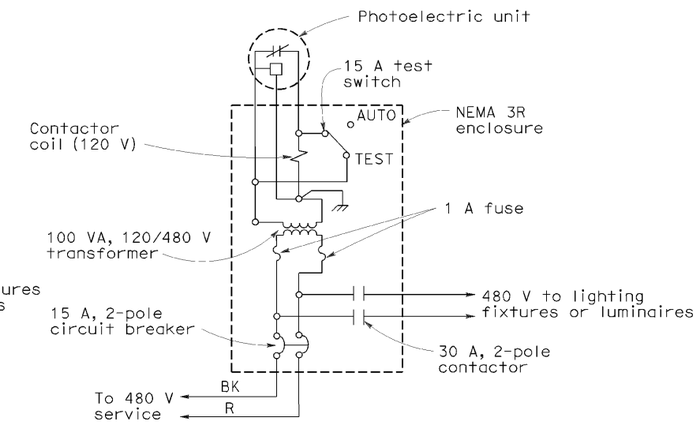

TYPE LC3 CONTROL

For 240 V and 480 V unswitched circuits

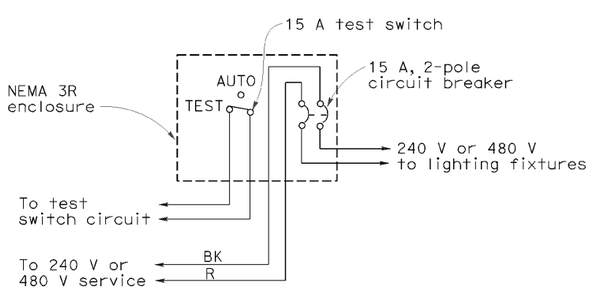

TYPE SC1 CONTROL

For 240 V or 480 V switched circuit, see Note 4 for Type SC1A

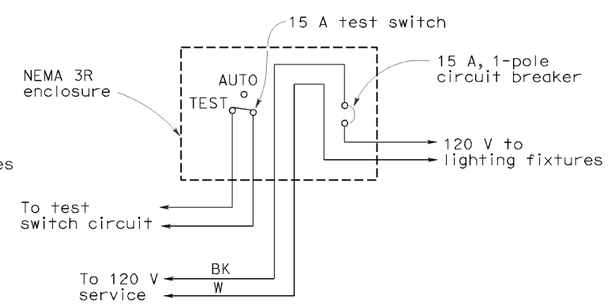

TYPE SC2 CONTROL

For 120 V switched circuit, see Note 4 for Type SC2A

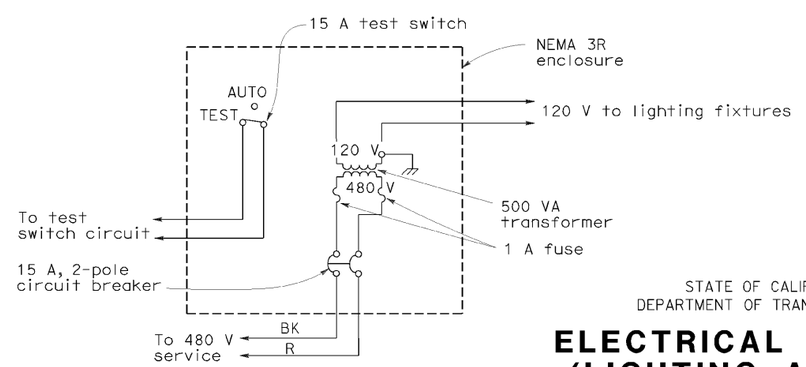

TYPE SC3 CONTROL

For 480 V switched sign circuit, see Note 4 for Type SC3A

STATE OF CALIFORNIA
DEPARTMENT OF TRANSPORTATION

ELECTRICAL SYSTEMS (LIGHTING AND SIGN ILLUMINATION CONTROL)

NO SCALE

RSP ES-15D DATED OCTOBER 5, 2007 SUPERCEDES STANDARD PLAN ES-15D DATED MAY 1, 2006 - PAGE 472 OF THE STANDARD PLANS BOOK DATED MAY 2006.

REVISED STANDARD PLAN RSP ES-15D

2006 REVISED STANDARD PLAN RSP ES-15D

9-10-07

DIST	COUNTY	ROUTE	POST MILES TOTAL PROJECT	SHEET NO.	TOTAL SHEETS
04	Ala,SCl	85,101, 880	Var	28	42

Randell D. Hiatt
REGISTERED CIVIL ENGINEER

October 20, 2006
PLANS APPROVAL DATE

REGISTERED PROFESSIONAL ENGINEER
Randell D. Hiatt
No. C50200
Exp. 6-30-07
CIVIL
STATE OF CALIFORNIA

The State of California or its officers or agents shall not be responsible for the accuracy or completeness of electronic copies of this plan sheet.

To accompany plans dated 2-13-12

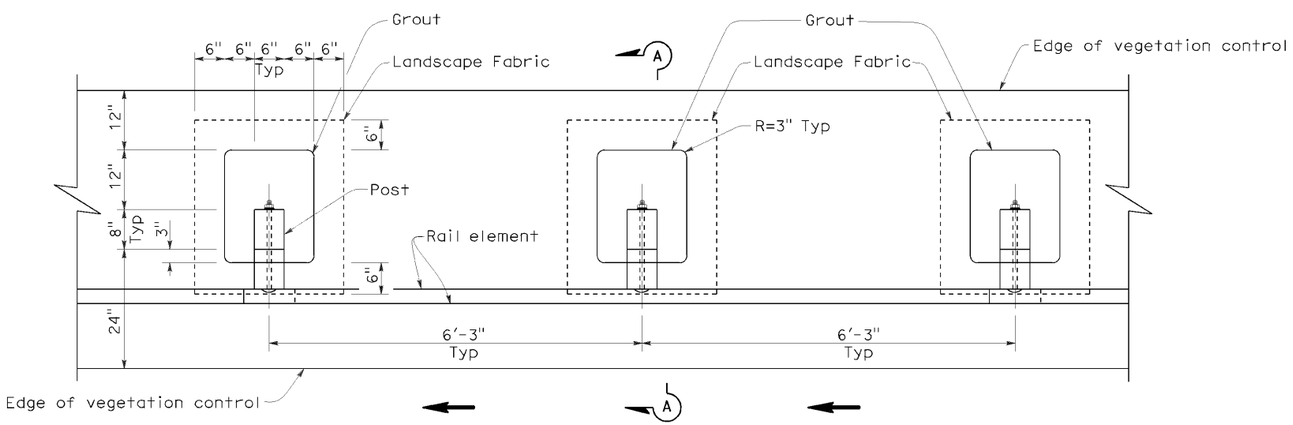

PLAN

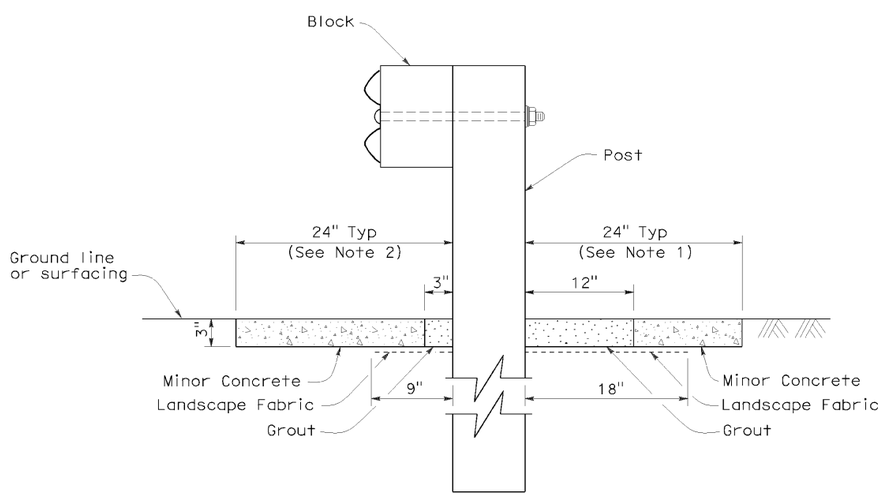

SECTION A-A

NOTES:

1. Where the distance between back of post and hinge point is less than 24", vegetation control to be constructed flush with the back edge of the post.
2. Where dike is constructed under railing, construct vegetation control to back edge of dike. Where paved shoulder is constructed within 24" in front of the post, construct vegetation control to the edge of paved shoulder.
3. Direction of adjacent traffic indicated by ←.

STATE OF CALIFORNIA
DEPARTMENT OF TRANSPORTATION

METAL BEAM GUARD RAILING TYPICAL VEGETATION CONTROL STANDARD RAILING SECTION

NO SCALE

NSP A77C5 DATED OCTOBER 20, 2006 SUPPLEMENTS THE STANDARD PLANS BOOK DATED MAY 2006.

NEW STANDARD PLAN NSP A77C5

2006 NEW STANDARD PLAN NSP A77C5

7-17-06

DIST	COUNTY	ROUTE	POST MILES TOTAL PROJECT	SHEET NO.	TOTAL SHEETS
04	Ala,SCl	85,101, 880	Var	29	42

Randell D. Hiatt
REGISTERED CIVIL ENGINEER

October 20, 2006
PLANS APPROVAL DATE

REGISTERED PROFESSIONAL ENGINEER
Randell D. Hiatt
No. C50200
Exp. 6-30-07
CIVIL
STATE OF CALIFORNIA

The State of California or its officers or agents shall not be responsible for the accuracy or completeness of electronic copies of this plan sheet.

To accompany plans dated 2-13-12

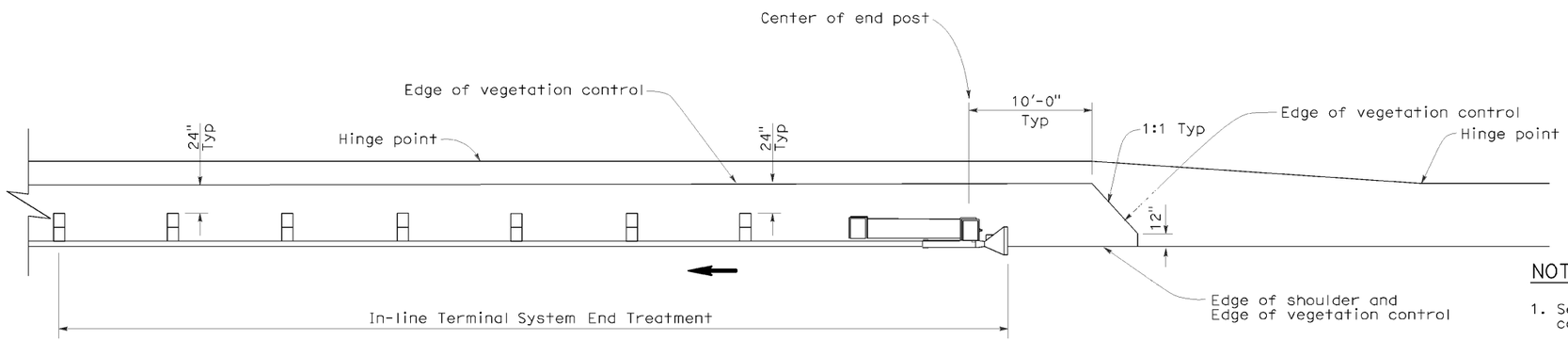

PLAN

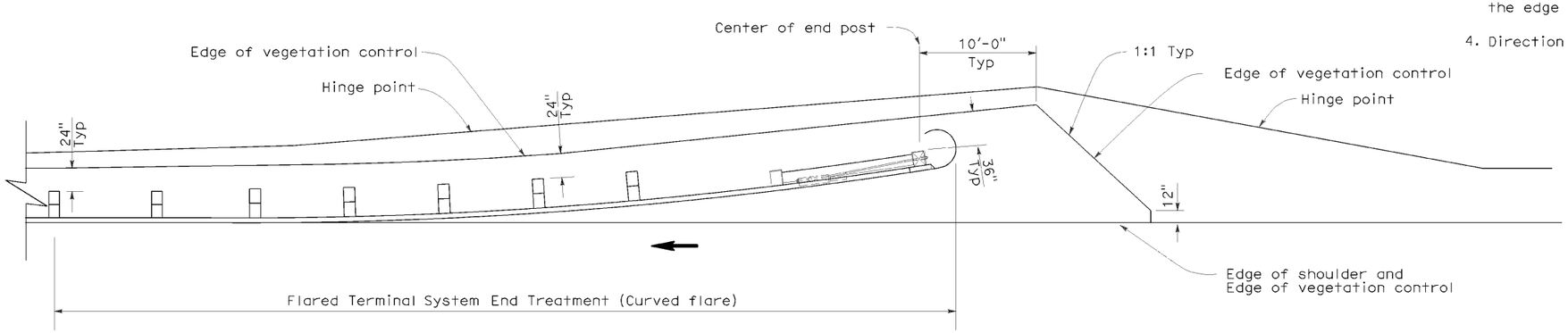

PLAN

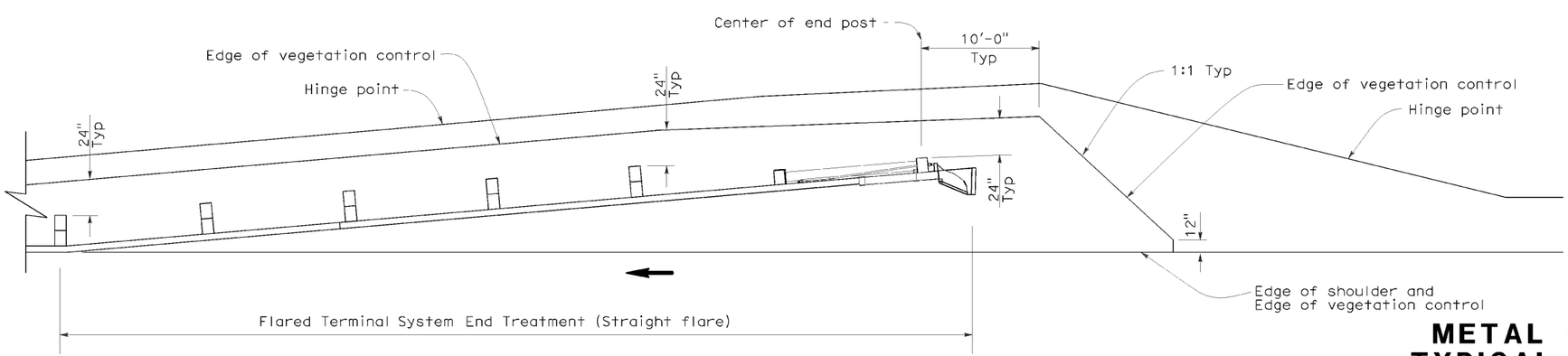

PLAN

NOTES:

1. See New Standard Plan NSP A77C5 for additional vegetation control details.
2. Where the distance between back of post and hinge point is less than 24", vegetation control to be constructed flush with the back edge of the post.
3. Where dike is constructed under railing, construct vegetation control to back edge of dike. Where paved shoulder is constructed within 24" in front of the post, construct vegetation control to the edge of paved shoulder.
4. Direction of adjacent traffic indicated by ←.

STATE OF CALIFORNIA
DEPARTMENT OF TRANSPORTATION

METAL BEAM GUARD RAILING TYPICAL VEGETATION CONTROL FOR TERMINAL SYSTEM END TREATMENTS

NO SCALE

NSP A77C6 DATED OCTOBER 20, 2006 SUPPLEMENTS THE STANDARD PLANS BOOK DATED MAY 2006.

NEW STANDARD PLAN NSP A77C6

2006 NEW STANDARD PLAN NSP A77C6

7-17-06

DIST	COUNTY	ROUTE	POST MILES TOTAL PROJECT	SHEET NO.	TOTAL SHEETS
04	Ala,SCl	85,101, 880	Var	30	42

Randell D. Hiatt
REGISTERED CIVIL ENGINEER

October 20, 2006
PLANS APPROVAL DATE

REGISTERED PROFESSIONAL ENGINEER Randell D. Hiatt No. C50200 Exp. 6-30-07 CIVIL STATE OF CALIFORNIA

The State of California or its officers or agents shall not be responsible for the accuracy or completeness of electronic copies of this plan sheet.

To accompany plans dated 2-13-12

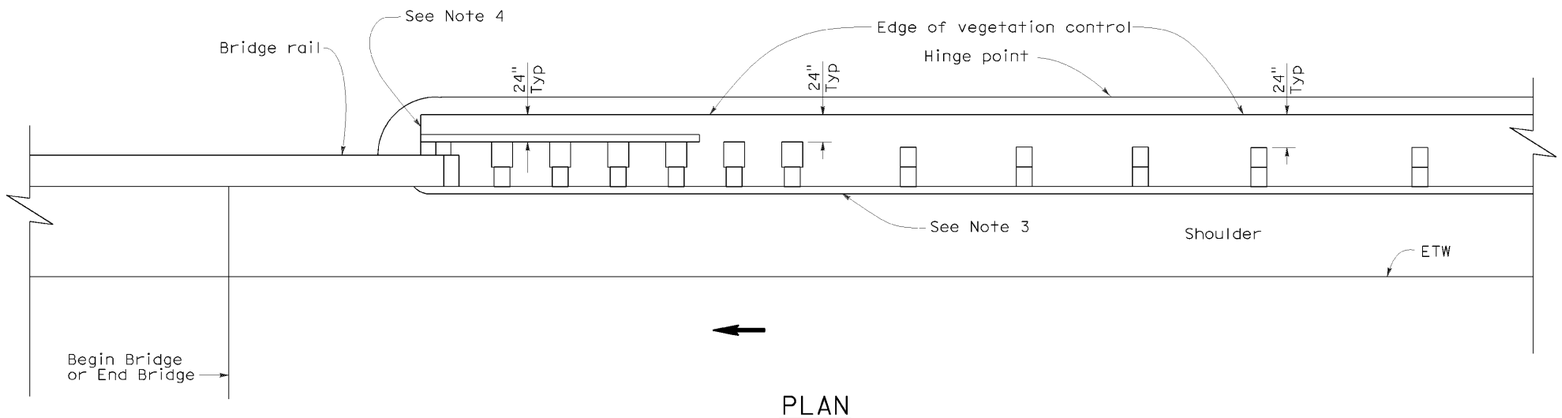

PLAN

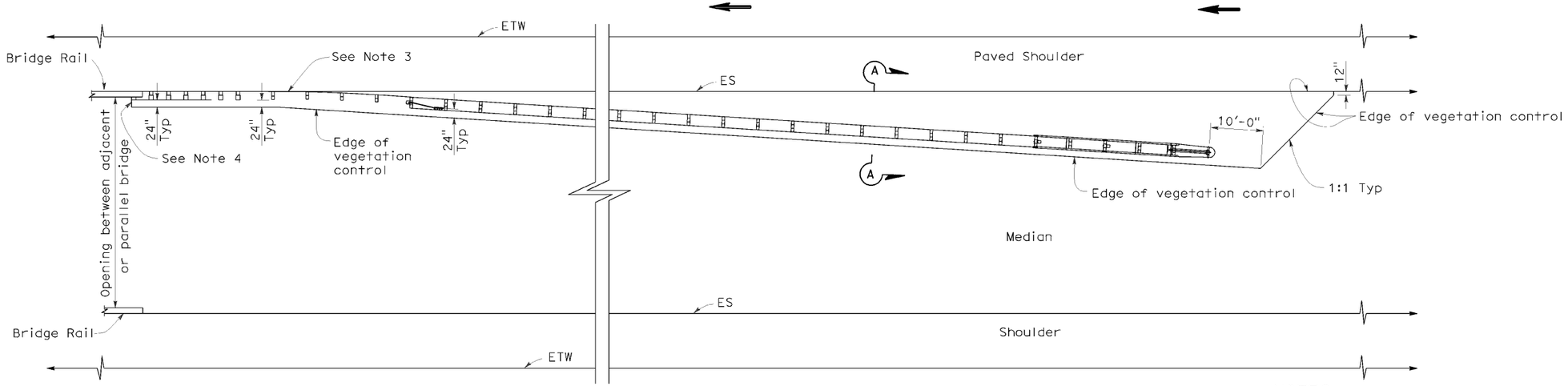

PLAN

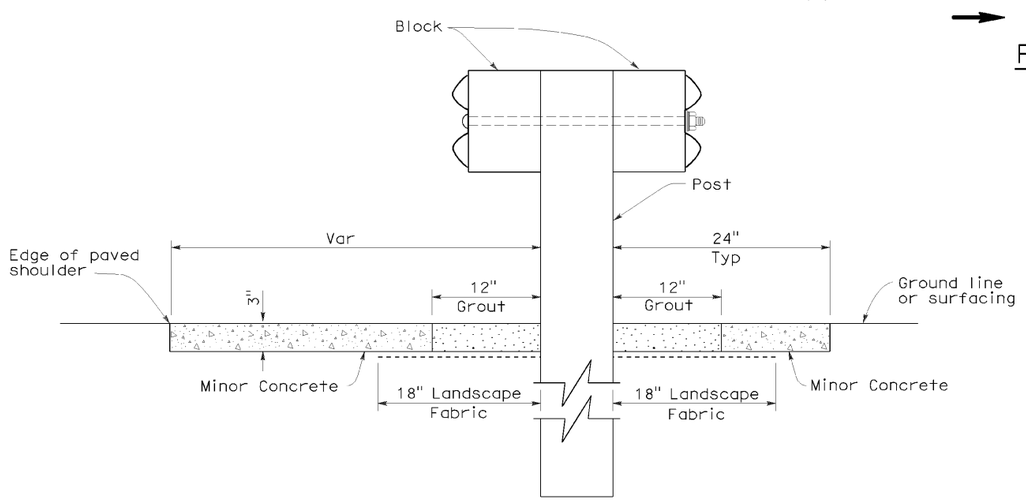

SECTION A-A

NOTES:

1. See New Standard Plan NSP A77C5 for additional vegetation control details.
2. Where the distance between back of post and hinge point is less than 24", vegetation control to be constructed flush with the back edge of the post.
3. Where dike is constructed under railing, construct vegetation control to back edge of dike. Where paved shoulder is constructed within 24" in front of the post, construct vegetation control to the edge of paved shoulder.
4. End vegetation control at end of backside rail element.
5. Direction of adjacent traffic indicated by ←.

STATE OF CALIFORNIA
DEPARTMENT OF TRANSPORTATION

METAL BEAM GUARD RAILING TYPICAL VEGETATION CONTROL AT STRUCTURE APPROACH AND DEPARTURE

NO SCALE

NSP A77C7 DATED OCTOBER 20, 2006 SUPPLEMENTS THE STANDARD PLANS BOOK DATED MAY 2006.

NEW STANDARD PLAN NSP A77C7

2006 NEW STANDARD PLAN NSP A77C7

7-17-06

DIST	COUNTY	ROUTE	POST MILES TOTAL PROJECT	SHEET NO.	TOTAL SHEETS
04	Ala,SCl	85,101, 880	Var	31	42

Randell D. Hiatt
REGISTERED CIVIL ENGINEER

October 20, 2006
PLANS APPROVAL DATE

REGISTERED PROFESSIONAL ENGINEER
Randell D. Hiatt
No. C50200
Exp. 6-30-07
CIVIL
STATE OF CALIFORNIA

The State of California or its officers or agents shall not be responsible for the accuracy or completeness of electronic copies of this plan sheet.

To accompany plans dated 2-13-12

NOTES:

1. See New Standard Plan NSP A77C5 for additional vegetation control details.
2. Where the distance between back of post and hinge point is less than 24", vegetation control to be constructed flush with the back edge of the post.
3. Where dike is constructed under railing, construct vegetation control to back edge of dike. Where paved shoulder is constructed within 24" in front of the post, construct vegetation control to the edge of paved shoulder.
4. Direction of adjacent traffic indicated by ←.

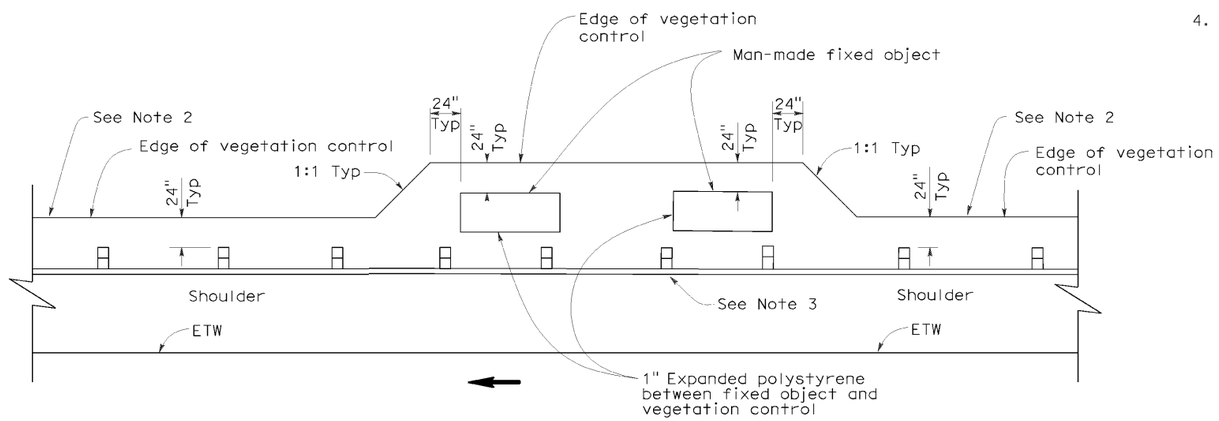

PLAN

FIXED OBJECT(S) ON SHOULDER

STATE OF CALIFORNIA
DEPARTMENT OF TRANSPORTATION

METAL BEAM GUARD RAILING TYPICAL VEGETATION CONTROL AT FIXED OBJECT

NO SCALE

NSP A77C8 DATED OCTOBER 20, 2006 SUPPLEMENTS THE STANDARD PLANS BOOK DATED MAY 2006.

NEW STANDARD PLAN NSP A77C8

2006 NEW STANDARD PLAN NSP A77C8

7-17-06

DIST	COUNTY	ROUTE	POST MILES TOTAL PROJECT	SHEET NO.	TOTAL SHEETS
04	Ala,SCl	85,101, 880	Var	35	42

LICENSED LANDSCAPE ARCHITECT

August 15, 2008
PLANS Approval DATE

The State of California or its officers or agents shall not be responsible for the accuracy or completeness of electronic copies of this plan sheet.

LICENSED LANDSCAPE ARCHITECT
Robert B. Schott 3833
Signature
11-04-08
Renewal Date
08-11-08
Date
STATE OF CALIFORNIA

To accompany plans dated 2-13-12

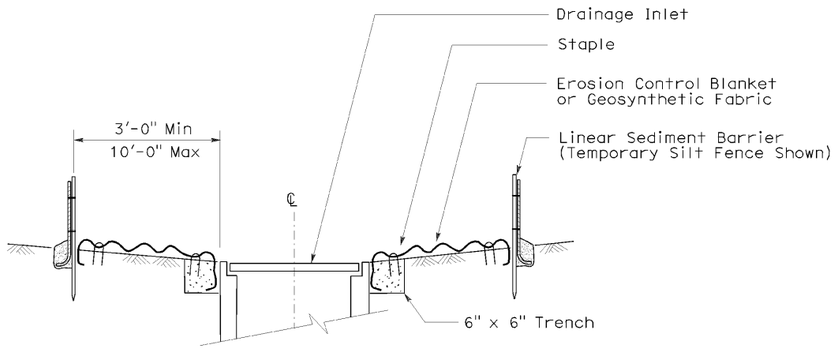

SECTION A-A

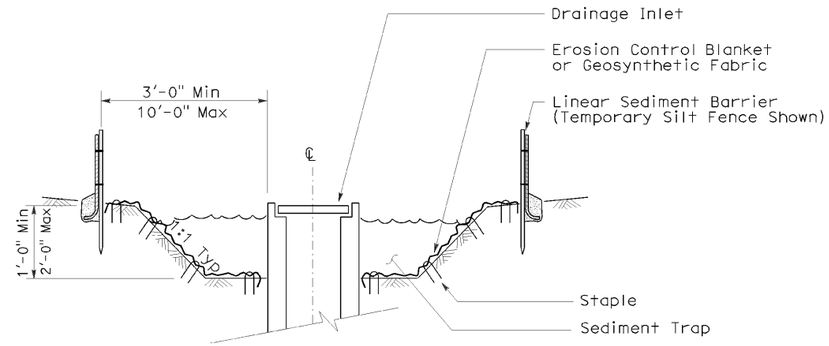

SECTION B-B

NOTES:

1. See Standard Plan T51 for Temporary Silt Fence.
2. Dimensions may vary to fit field conditions.

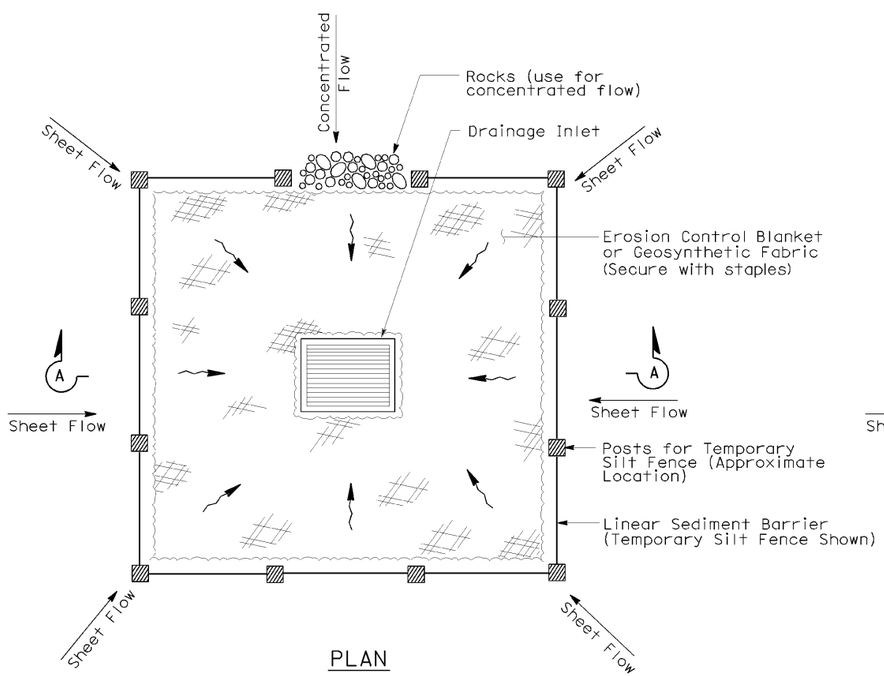

PLAN

TEMPORARY DRAINAGE INLET PROTECTION (TYPE 1)

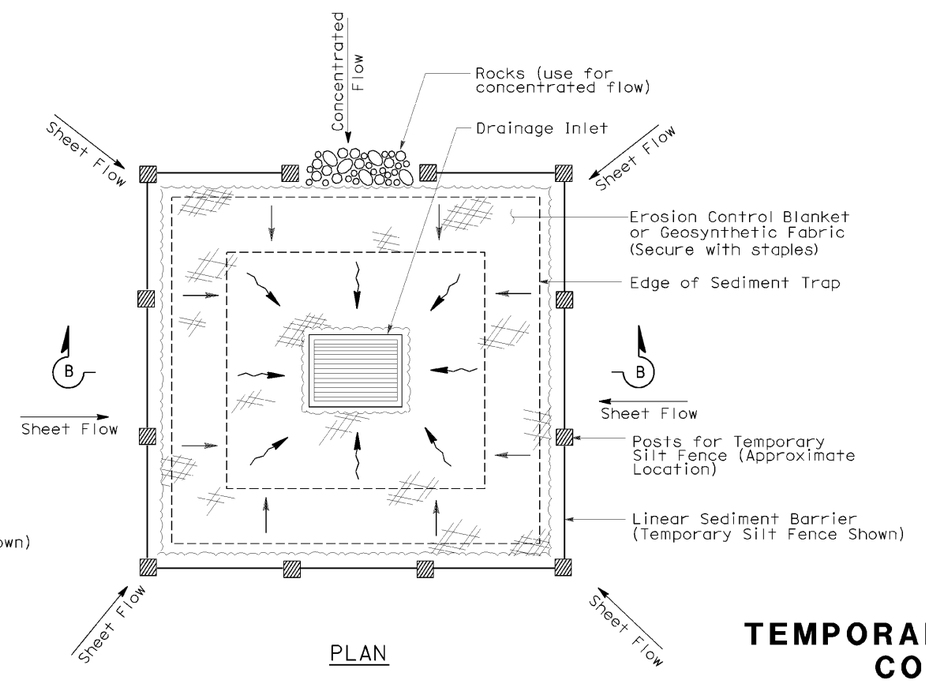

PLAN

TEMPORARY DRAINAGE INLET PROTECTION (TYPE 2) (EXCAVATED SEDIMENT TRAP)

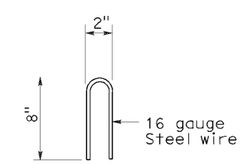

STAPLE DETAIL

STATE OF CALIFORNIA
DEPARTMENT OF TRANSPORTATION

TEMPORARY WATER POLLUTION CONTROL DETAILS (TEMPORARY DRAINAGE INLET PROTECTION)

NO SCALE

Nsp t61 dated august 15, 2008 supplements the standard plans book dated may 2006.

NEW STANDARD PLAN NSP T61

2006 NEW STANDARD PLAN NSP T61

7-11-08

DIST	COUNTY	ROUTE	POST MILES TOTAL PROJECT	SHEET NO.	TOTAL SHEETS
04	Ala,SCl	85,101, 880	Var	36	42

LICENSED LANDSCAPE ARCHITECT

August 15, 2008
PLANS APPROVAL DATE

The State of California or its officers or agents shall not be responsible for the accuracy or completeness of electronic copies of this plan sheet.

LICENSED LANDSCAPE ARCHITECT Robert B. Schott 3833 Signature 11-04-08 Renewal Date 08-11-08 Date STATE OF CALIFORNIA

To accompany plans dated 2-13-12

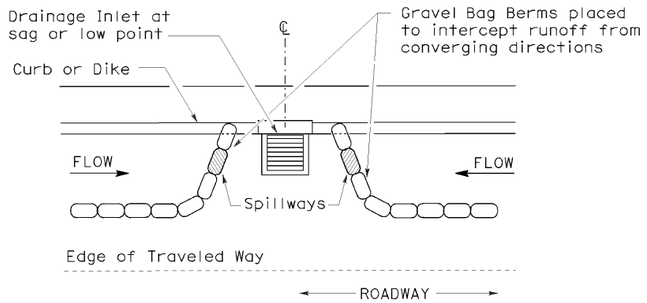

PLAN

CONFIGURATION FOR SAG POINT INLET (GRAVEL BAG BERM)

GRAVEL BAG BERM (TYPE 3A) SPACING TABLE

SLOPE OF ROADWAY (PERCENT)	1 to 3.9	4 to 5.9	6 to 7.9	8 to 10	10+
INTERVAL BETWEEN BERM	100′	75′	50′	25′	12′

For slope of less than 1%, install barriers only if erosion/sediment is prevalent

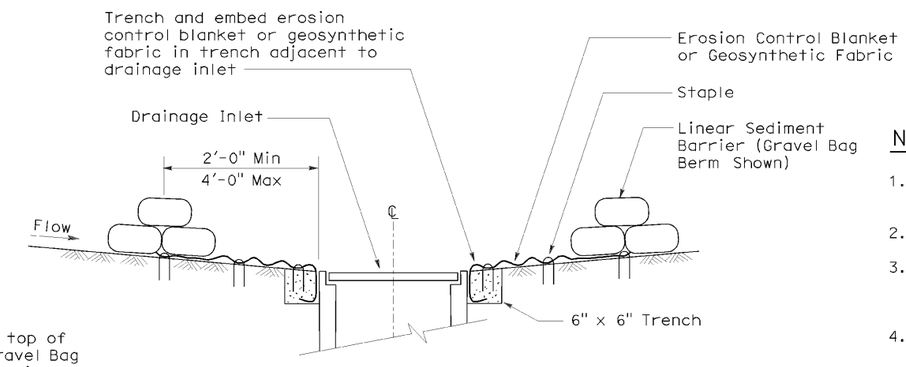

SECTION A-A

NOTES:

1. Place safety cones adjacent to drainage inlet protection.
2. Dimensions may vary to fit field conditions.
3. Install a minimum of 3 gravel bag berms upstream of each drainage inlet to be protected.
4. Position erosion control blanket or geosynthetic fabric at edge of concrete apron and secure in trench.
5. Erosion control blanket or geosynthetic fabric is not required if the area adjacent to the drainage inlet is vegetated or paved.

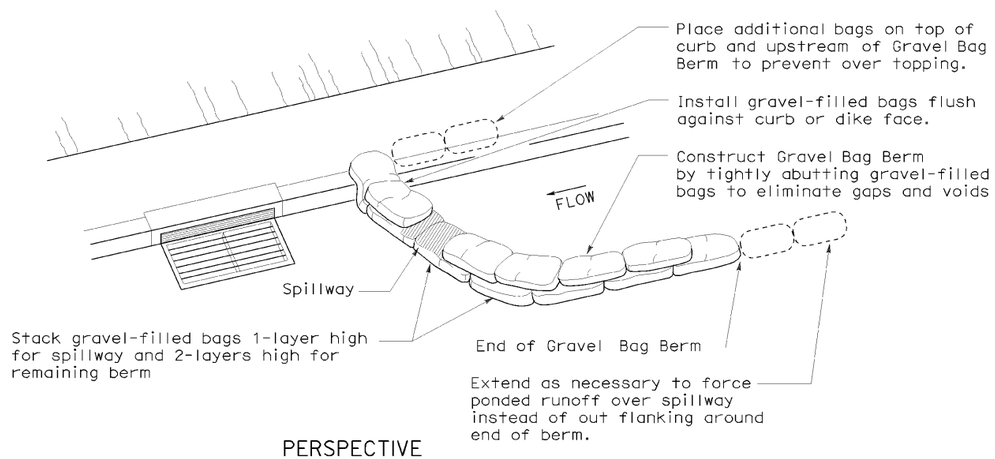

PERSPECTIVE

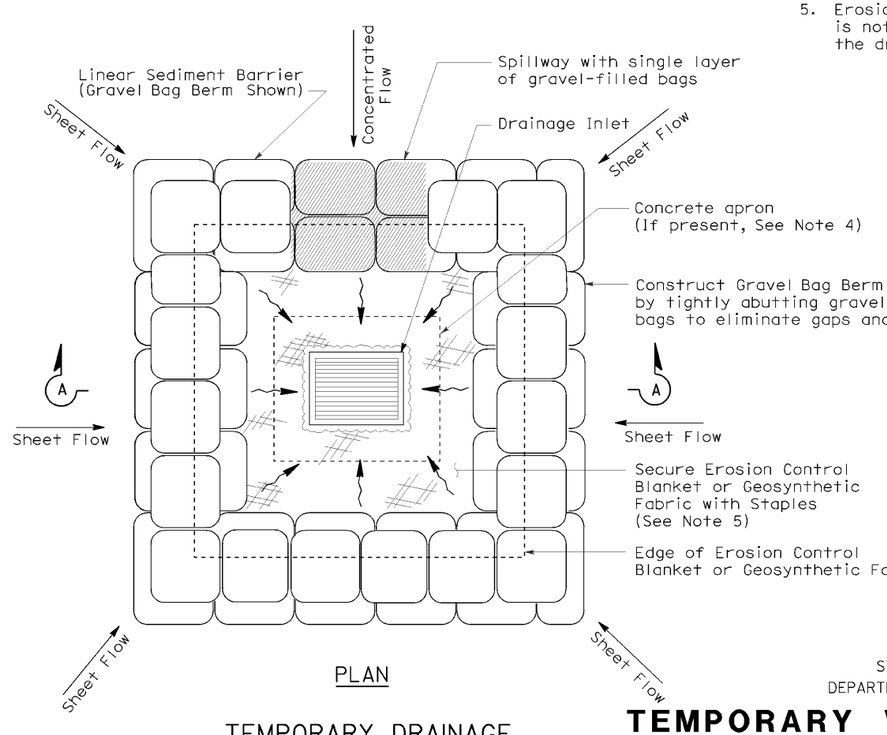

PLAN

TEMPORARY DRAINAGE INLET PROTECTION (TYPE 3B)

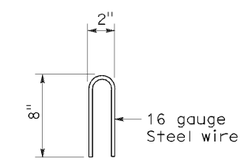

STAPLE DETAIL

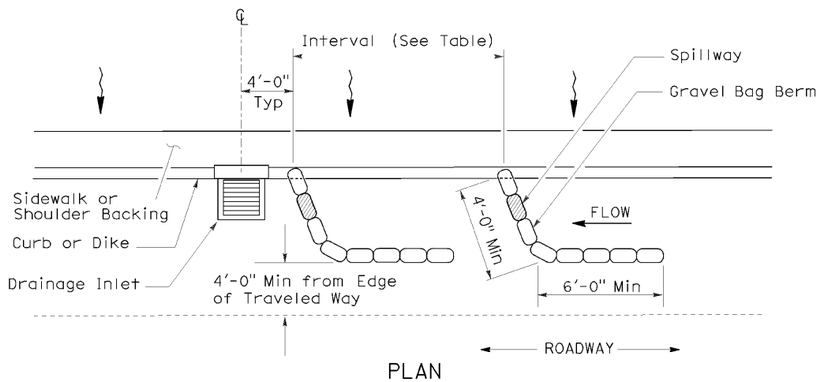

PLAN

TEMPORARY DRAINAGE INLET PROTECTION (TYPE 3A) (GRAVEL BAG BERM)

STATE OF CALIFORNIA
DEPARTMENT OF TRANSPORTATION

TEMPORARY WATER POLLUTION CONTROL DETAILS (TEMPORARY DRAINAGE INLET PROTECTION)

NO SCALE

NSP T62 DATED AUGUST 15, 2008 SUPPLEMENTS THE STANDARD PLANS BOOK DATED MAY 2006.

NEW STANDARD PLAN NSP T62

2006 NEW STANDARD PLAN NSP T62

7-11-08

DIST	COUNTY	ROUTE	POST MILES TOTAL PROJECT	SHEET NO.	TOTAL SHEETS
04	Ala,SCl	85,101, 880	Var	37	42

Robert B. Schott
LICENSED LANDSCAPE ARCHITECT

August 15, 2008
PLANS APPROVAL DATE

The State of California or its officers or agents shall not be responsible for the accuracy or completeness of electronic copies of this plan sheet.

LICENSED LANDSCAPE ARCHITECT Robert B. Schott 3503 Signature 11-04-08 Renewal Date 08-11-08 Date STATE OF CALIFORNIA

To accompany plans dated 2-13-12

FLEXIBLE SEDIMENT BARRIER SPACING TABLE

SLOPE OF ROADWAY (PERCENT)	0 to 0.9	1 to 1.9	2 to 2.9	3 to 4	5+
INTERVAL BETWEEN BARRIERS	50′	35′	30′	25′	20′
ANGLE FROM FACE OF CURB	70°	70°	70°	45°	45°
SUGGESTED BARRIER LENGTH	6′	6′	6′	6′	6′

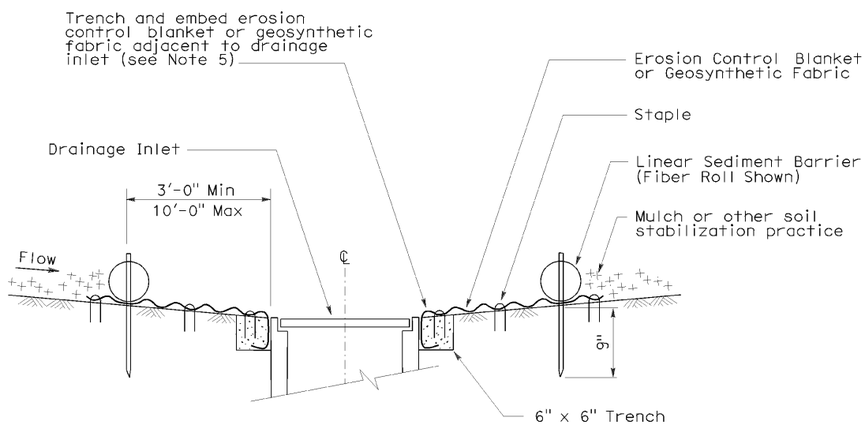

SECTION A-A

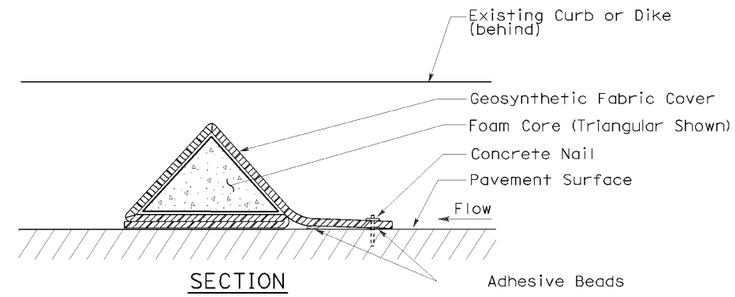

SECTION

FLEXIBLE SEDIMENT BARRIER DETAIL (FOAM BARRIER SHOWN)

NOTES:

1. See Standard Plan T51 for Temporary Silt Fence.
2. Dimensions may vary to fit field conditions.
3. Install a minimum of 3 flexible sediment barriers upstream of each drainage inlet to be protected.
4. Position erosion control blanket or geosynthetic fabric at edge of concrete apron and secure in trench.
5. Erosion control blanket or geosynthetic fabric is not required if the area adjacent to the drainage inlet is vegetated.

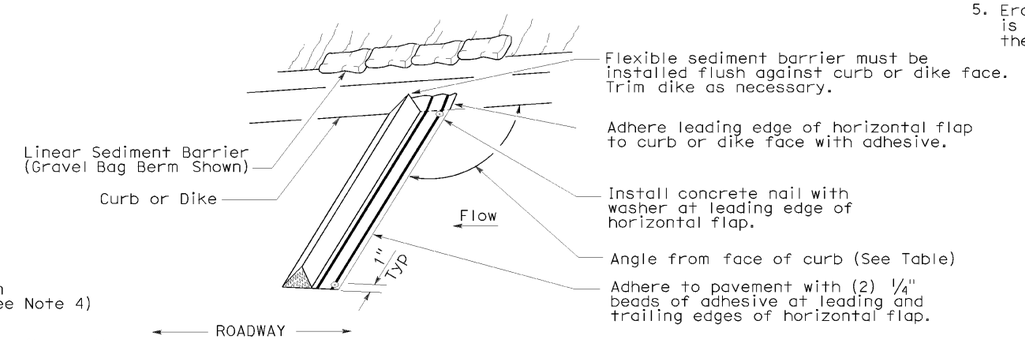

PERSPECTIVE

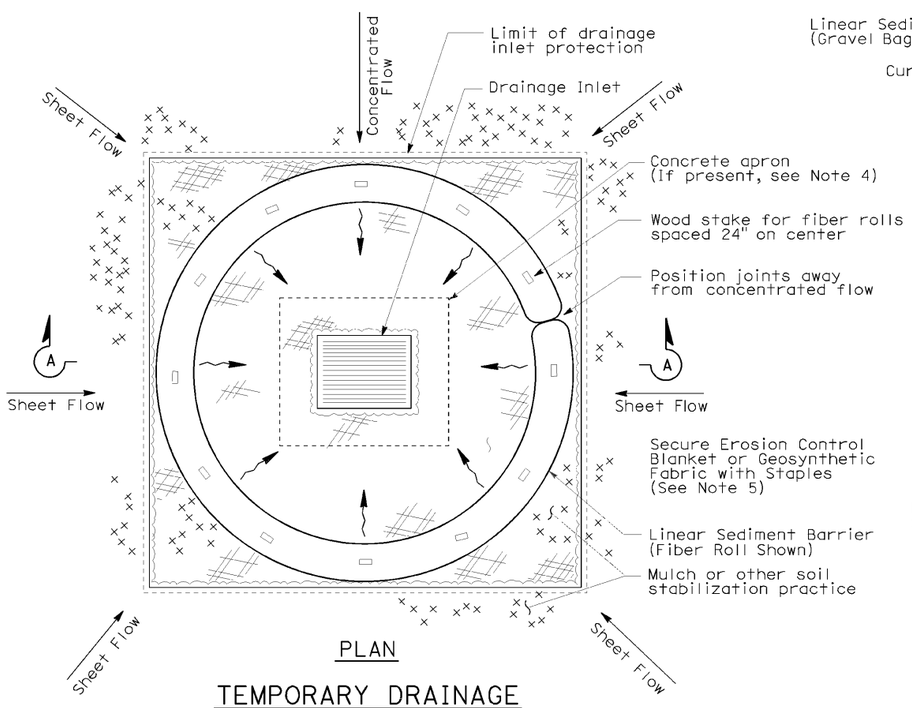

PLAN

TEMPORARY DRAINAGE INLET PROTECTION (TYPE 4A)

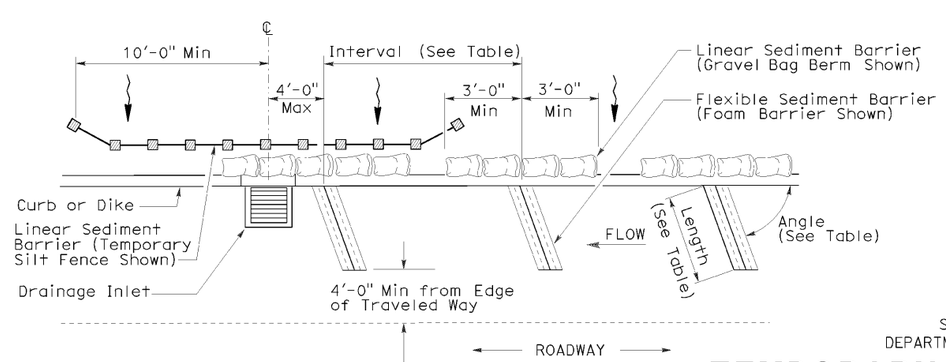

PLAN

TEMPORARY DRAINAGE INLET PROTECTION (TYPE 4B) FLEXIBLE SEDIMENT BARRIER

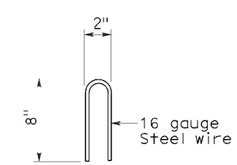

STAPLE DETAIL

STATE OF CALIFORNIA
DEPARTMENT OF TRANSPORTATION

TEMPORARY WATER POLLUTION CONTROL DETAILS (TEMPORARY DRAINAGE INLET PROTECTION)

NO SCALE

NSP T63 DATED AUGUST 15, 2008 SUPPLEMENTS THE STANDARD PLANS BOOK DATED MAY 2006.

NEW STANDARD PLAN NSP T63

2006 NEW STANDARD PLAN NSP T63

7-11-08

DIST	COUNTY	ROUTE	POST MILES TOTAL PROJECT	SHEET NO.	TOTAL SHEETS
04	Ala,SCl	85,101, 880	Var	38	42

LICENSED LANDSCAPE ARCHITECT

August 15, 2008
PLANS APPROVAL DATE

The State of California or its officers or agents shall not be responsible for the accuracy or completeness of electronic copies of this plan sheet.

LICENSED LANDSCAPE ARCHITECT — ROBERT B. SCHOTT — Signature — Renewal Date 11-04-08 — Date 08-11-08 — STATE OF CALIFORNIA

To accompany plans dated 2-13-12

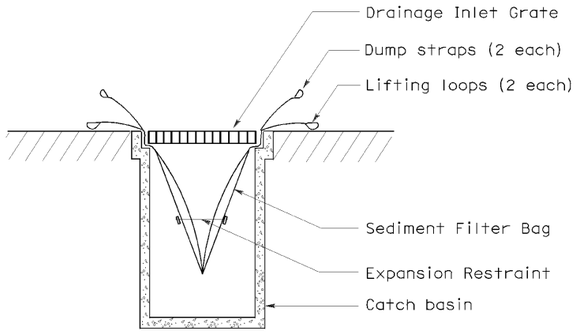

SECTION B-B

SEDIMENT FILTER BAG DETAIL

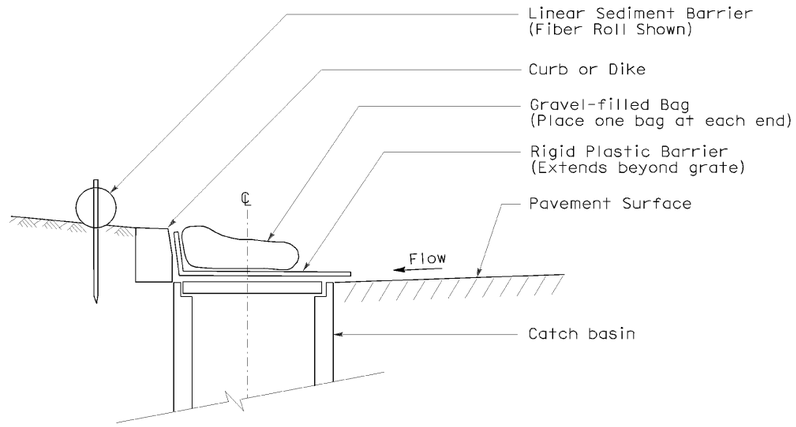

SECTION

TEMPORARY DRAINAGE INLET PROTECTION (TYPE 6A) (CATCH BASIN WITH GRATE)

NOTES:

1. See Standard Plan T51 for Temporary Silt Fence.
2. Dimensions may vary to fit field conditions.

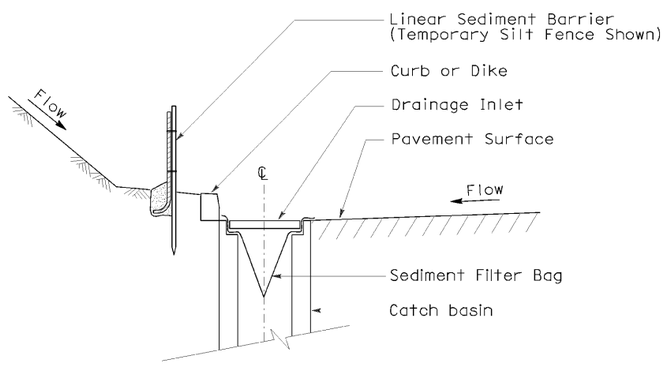

SECTION A-A

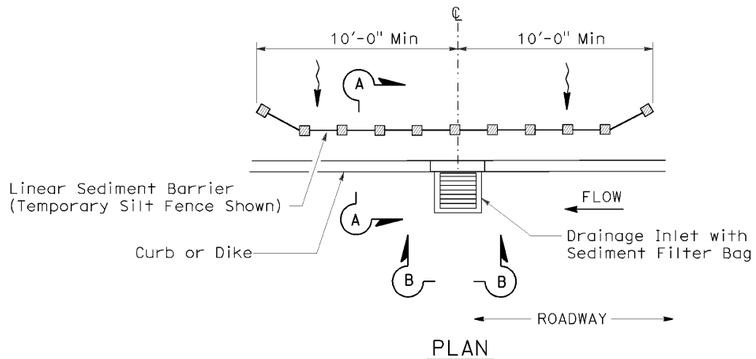

PLAN

TEMPORARY DRAINAGE INLET PROTECTION (TYPE 5) (SEDIMENT FILTER BAG)

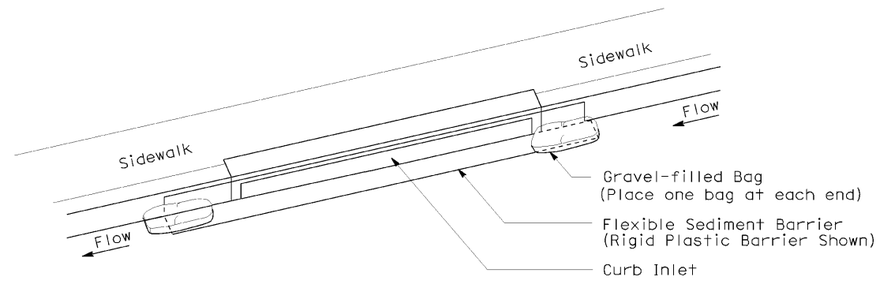

PERSPECTIVE

TEMPORARY DRAINAGE INLET PROTECTION (TYPE 6B) (CURB INLET WITHOUT GRATE)

STATE OF CALIFORNIA
DEPARTMENT OF TRANSPORTATION

TEMPORARY WATER POLLUTION CONTROL DETAILS (TEMPORARY DRAINAGE INLET PROTECTION)

NO SCALE

NSP T64 DATED AUGUST 15, 2008 SUPPLEMENTS
THE STANDARD PLANS BOOK DATED MAY 2006.

NEW STANDARD PLAN NSP T64

2006 NEW STANDARD PLAN NSP T64

7-11-08