ACHSNHPIG-X001(593)E

Dist	COUNTY	ROUTE	POST MILES TOTAL PROJECT	SHEET No.	TOTAL SHEETS
04	Ala	580, 680	Var	1	143

STATE OF CALIFORNIA

DEPARTMENT OF TRANSPORTATION

2

PROJECT PLANS FOR CONSTRUCTION ON

STATE HIGHWAY

IN ALAMEDA COUNTY AT VARIOUS LOCATIONS

TO BE SUPPLEMENTED BY STANDARD PLANS DATED 2010

INDEX OF PLANS

SHEET No.	DESCRIPTION
1	TITLE SHEET AND LOCATION MAP
2	LOCATIONS OF CONSTRUCTION
3 - 26	CONSTRUCTION DETAILS 23A, 23B
27	TEMPORARY WATER POLLUTION CONTROL QUANTITIES
28 - 29	DRAINAGE DETAILS AND QUANTITIES
30 - 38	CONSTRUCTION AREA SIGNS
39 - 48	SUMMARY OF QUANTITIES
49	IRRIGATION QUANTITIES
50 - 51	EROSION CONTROL LEGEND, DETAILS, AND QUANTITIES
52 - 78	ELECTRICAL PLANS
79 - 106	REVISED STANDARD PLANS 106A, 106B, 106C, 109A 109B, 109C, 110A, 110B, 110C, 110D
	STRUCTURAL PLANS
111 - 143	CONCRETE BARRIER TRANSITIONS 125A, 130A, 130B, 130C, 141A

THE STANDARD PLANS LIST APPLICABLE TO THIS CONTRACT IS INCLUDED IN THE NOTICE TO BIDDERS AND SPECIAL PROVISIONS BOOK.

NEW NUMBER OF TOTAL SHEETS- 162
SEE INDEX OF PLANS FOR ADDED/REVISED SHEET NUMBERS

LOCATION MAP

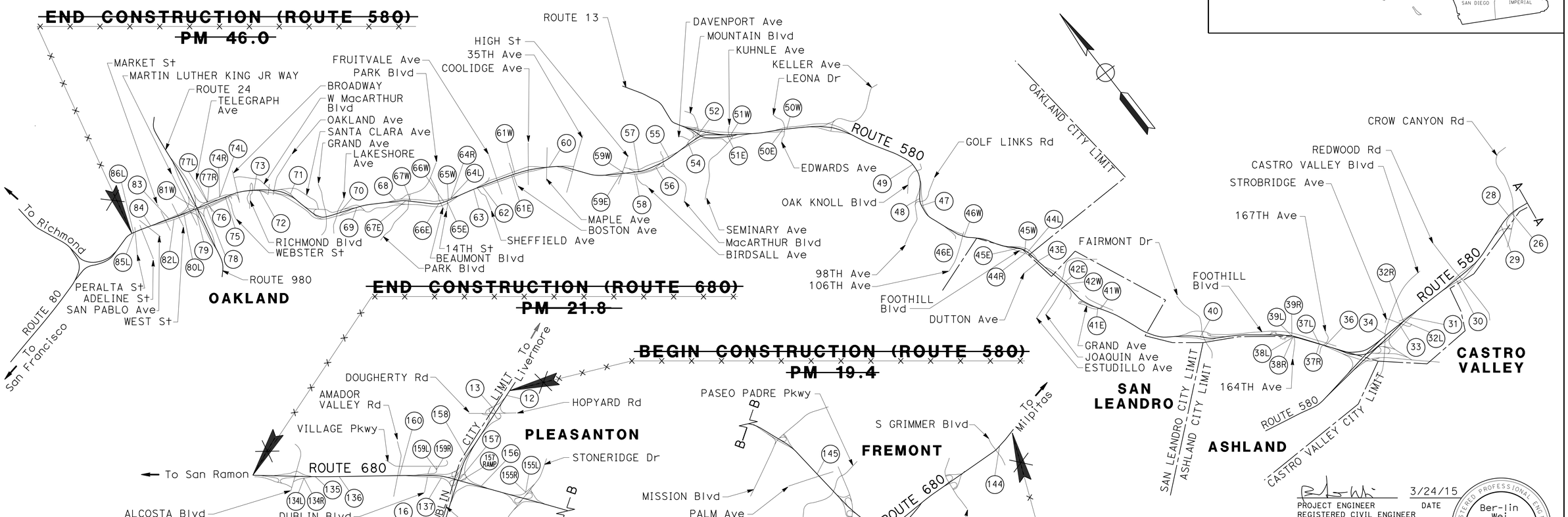

2 REPLACED PER ADDENDUM No. 2 DATED AUGUST 13, 2015

THE CONTRACTOR SHALL POSSESS THE CLASS (OR CLASSES) OF LICENSE AS SPECIFIED IN THE "NOTICE TO BIDDERS."

NO SCALE

NOTE:
THE TABLE OF LOCATIONS OF CONSTRUCTION IS SHOWN ON THE LOCATIONS OF CONSTRUCTION SHEET.

PROJECT ENGINEER REGISTERED CIVIL ENGINEER — DATE 3/24/15

Ber-lin Wei No. 49855 Exp. 9-30-16 CIVIL — REGISTERED PROFESSIONAL ENGINEER — STATE OF CALIFORNIA

March 30, 2015
PLANS APPROVAL DATE

THE STATE OF CALIFORNIA OR ITS OFFICERS OR AGENTS SHALL NOT BE RESPONSIBLE FOR THE ACCURACY OR COMPLETENESS OF SCANNED COPIES OF THIS PLAN SHEET.

CONTRACT No.	04-2G5214
PROJECT ID	0414000064

PROJECT MANAGER ISSA BOURI
DESIGN MANAGER GEORGE LO

LAST REVISION 03-30-15
DATE PLOTTED => 12-AUG-2015
TIME PLOTTED => 09:10

Dist	COUNTY	ROUTE	POST MILES TOTAL PROJECT	SHEET No.	TOTAL SHEETS
04	Ala	580, 680	Var	2	143

REGISTERED CIVIL ENGINEER 3/24/15 DATE

3-30-15
PLANS APPROVAL DATE

REGISTERED PROFESSIONAL ENGINEER Ber-lin Wei No. 49855 Exp. 9-30-16 CIVIL STATE OF CALIFORNIA

THE STATE OF CALIFORNIA OR ITS OFFICERS OR AGENTS SHALL NOT BE RESPONSIBLE FOR THE ACCURACY OR COMPLETENESS OF SCANNED COPIES OF THIS PLAN SHEET.

LOCATIONS OF CONSTRUCTION (ROUTE 580)

LOCATION No.	DIRECTION	PM	SHOULDER	DESCRIPTION
13	WB	19.62	R+	OFF-RAMP TO DOUGHERTY/HOPYARD Rd
28	WB	R28.57	R+	MAINLINE - CROW Cr (Br No. 33-0232R)
32R	WB	30.35	R+	MAINLINE - STROBRIDGE Ave UC (Br No. 33-0189R)
32L	WB	30.35	L+	MAINLINE - STROBRIDGE Ave UC (Br No. 33-0189R)
34	WB	R30.55	R+	MAINLINE - CASTRO VALLEY Blvd UC (Br No. 33-0202R)
36	WB	R31.34	R+	MAINLINE - 167TH Ave UC (Br No. 33-0396R)
40	WB	R32.72	R+	MAINLINE - PLAZA DRIVE OC (FAIRMONT Dr OC)(Br No. 33-0337)
41W	WB	R33.94	R+	MAINLINE - GRAND Ave OC (Br No. 33-0330)
42W	WB	R34.40	R+	MAINLINE - JOAQUIN Ave UC (Br No. 33-0331)
45W	WB	R35.05	R+	MAINLINE - FOOTHILL Blvd UC (Br No. 33-0335)
46W	WB	R35.71	R+	MAINLINE - 106TH Ave UC (Br No. 33-0355)
47	WB	R36.34	R+	MAINLINE - GOLF LINKS Rd UC (Br No. 33-0354)
50W	WB	R38.31	R+	MAINLINE - EDWARDS Ave UC (Br No. 33-0341)
51W	WB	R38.92	R+	MAINLINE - KUHNLE Ave UC (Br No. 33-0342)
52	WB	R39.37	R+	MAINLINE - DAVENPORT Ave UC (Br No. 33-0343)
54	WB	R39.45	R+	ON-RAMP FROM MOUNTAIN Blvd/ROUTE 13
55	WB	R39.77	R+	MAINLINE - MacARTHUR Blvd UC (Br No. 33-0316)
57	WB	R39.93	R+	MAINLINE - BIRDSALL Ave POC (Br No. 33-0328)
59W	WB	R40.08	R+	MAINLINE - HIGH St UC (Br No. 33-0318)
60	WB	R40.93	R+	MAINLINE - MAPLE Ave UC (Br No. 33-0321)
61W	WB	R41.33	R+	MAINLINE - BOSTON Ave OC (Br No. 33-0323)
64R	WB	R42.07	R+	OFF-RAMP TO BEAUMONT Ave/BRUCE St
64L	WB	R42.07	L+	OFF-RAMP TO BEAUMONT Ave/BRUCE St
65W	WB	R42.07	R+	MAINLINE - 14TH Ave UC (Br No. 33-0309R)
66W	WB	R42.18	R+	MAINLINE - BEAUMONT Ave UC (Br No. 33-0310R)
67W	WB	42.67	R+	MAINLINE - PARK Blvd UC (Br No. 33-0315R)
68	WB	42.89	R+	ON-RAMP FROM PARK Blvd
70	WB	43.48	R+	MAINLINE - LAKESHORE Ave UC (Br No. 33-0131)
71	WB	44.08	R+	OFF-RAMP TO SANTA CLARA Ave/OAKLAND Ave
73	WB	44.51	R+	MAINLINE - BROADWAY RICHMOND Blvd UC (Br No. 33-0285)
74R	WB	44.86	R+	OFF-RAMP TO WB ROUTE 24
74L	WB	44.86	L+	OFF-RAMP TO WB ROUTE 24
77R	WB	45.05	R+	OFF-RAMP TO EB ROUTE 24
77L	WB	45.05	L+	OFF-RAMP TO EB ROUTE 24
81W	WB	45.25	R+	MAINLINE - WEST St UC (MARTIN LUTHER KING JR WAY UC/Br No. 33-0299)
83	WB	45.57	R+	ON-RAMP FROM WB 24/52ND St
84	WB	45.74	R+	MAINLINE - ADELINE St UC (Br No. 33-0280)
86L	WB	46.01	L+	MAINLINE - MacARTHUR Blvd UC (Br No. 33-0281R)
85L	EB	45.94	L+	MAINLINE - ADELINE St UC (Br No. 33-0280)
82L	EB	45.48	L+	OFF-RAMP TO EB ROUTE 24
80L	EB	45.37	L+	OFF-RAMP TO WB 980/27TH St
79	EB	45.25	R+	MAINLINE - GROVE St UC (Br No. 33-0299)
78	EB	45.03	R+	OFF-RAMP TO BROADWAY Blvd/WEBSTER St
76	EB	45.03	R+	MAINLINE - TELEGRAPH Ave UC (Br No. 33-0297)
75	EB	44.81	R+	MAINLINE - WEBSTER St UC (Br No. 33-0296)
72	EB	44.28	R+	MAINLINE - OAKLAND Ave UC (Br No. 33-0288)
67E	EB	42.67	R+	MAINLINE - PARK Blvd UC (Br No. 33-0315)
66E	EB	R42.18	R+	MAINLINE - BEAUMONT Ave UC (Br No. 33-0310)
65E	EB	R42.07	R+	MAINLINE - 14TH Ave UC (Br No. 33-0309L)
63	EB	R41.75	R+	MAINLINE - SHEFFIELD Ave OC (Br No. 33-0325)
62	EB	41.67	R+	OFF-RAMP TO FRUITVALE Ave
61E	EB	R41.33	R+	MAINLINE - BOSTON Ave OC (Br No. 33-0323)
59E	EB	R40.08	R+	MAINLINE - HIGH St UC (Br No. 33-0318)
58	EB	39.95	R+	OFF-RAMP TO SB MacARTHUR Blvd
56	EB	39.85	R+	MAINLINE - ON-RAMP FROM SB MacARTHUR Blvd
51E	EB	R38.92	R+	MAINLINE - KUHNLE Ave UC (Br No. 33-0342)
50E	EB	R38.31	R+	MAINLINE - EDWARDS Ave UC (Br No. 33-0341)
48	EB	R36.38	R+	MAINLINE - GOLF LINKS Rd UC (Br No. 33-0354)
46E	EB	R35.71	R+	MAINLINE - 106TH Ave UC (Br No. 33-0355)
45E	EB	R35.05	R+	MAINLINE - FOOTHILL Blvd UC (Br No. 33-0335)

2 **REPLACED PER ADDENDUM No. 2 DATED AUGUST 13, 2015**

LOCATIONS OF CONSTRUCTION (ROUTE 580)

LOCATION No.	DIRECTION	PM	SHOULDER	DESCRIPTION
44R	EB	R34.88	R+	
44L	EB	R34.88	L+	ON-RAMP FROM SB FOOTHILL Blvd (Br No. 33-0334K)
43E	EB	R34.82	R+	MAINLINE - DUTTON Ave UC (Br No. 33-0333)
42E	EB	R34.40	R+	MAINLINE - JOAQUIN Ave UC (Br No. 33-0331)
41E	EB	R33.94	R+	MAINLINE - GRAND Ave OC (Br No. 33-0330)
39R	EB	R31.75	R+	MAINLINE - 164TH Ave UC (Br No. 33-0395L)
39L	EB	R31.75	L+	MAINLINE - 164TH Ave UC (Br No. 33-0395L)
38R	EB	R31.63	R+	ON-RAMP FROM EB LIBERTY St
38L	EB	R31.63	L+	ON-RAMP FROM LIBERTY St
37R	EB	R31.38	R+	MAINLINE - 167TH Ave UC (Br No. 33-0396L)
37L	EB	R31.38	L+	MAINLINE - 167TH Ave UC (Br No. 33-0396L)
33	EB	30.39	L+	MAINLINE - STROBRIDGE Ave UC (Br No. 33-0189L)
31	EB	30.16	R+	ON-RAMP FROM STROBRIDGE Ave
12	EB	19.39	R+	MAINLINE - DOUGHERTY OH (Br No. 33-0150L) (ACCESS Rd UC /BART DUBLIN-PLEASANTON STATION)
16	WB	21.20	R+	OFF-RAMP TO NB SAN RAMON Rd
69	EB	43.23	R+	MAINLINE - LAKE PARK Ave OC (Br No. 33-0314)
49	EB	R36.75	R+	MAINLINE - OAK KNOLL Blvd OC (Br No. 33-0353)
30	EB	R29.40	R+	MAINLINE - REDWOOD Rd UC (Br No. 33-0193L)
29	EB	R28.62	R+	MAINLINE - CROW Cr (Br No. 33-0232L)
26	EB	R28.41	R+	MAINLINE - CROW CANYON Rd UC (Br No. 33-0233L)

2

LOCATIONS OF CONSTRUCTION (ROUTE 680)

LOCATION No.	DIRECTION	PM	SHOULDER	DESCRIPTION
144	NB	M3.35	R+	MAINLINE - GRIMMER Blvd UC (Br No. 33-0429R)
145	NB	M6.05	R+	MAINLINE - 750' NORTH OF PALM Ave OC (Br No. 33-0360)
155R	NB	19.32	R+	ON-RAMP FROM WB STONERIDGE Dr
155L	NB	19.32	L+	ON-RAMP FROM WB STONERIDGE Dr
156	NB	19.81	R+	OFF-RAMP TO EB ROUTE 580
157	NB	R20.03	R+	MAINLINE - 680/580 Sep (Br No. 33-0371G)
157RAMP	NB	R20.03	L+	RAMP/680-580 Sep (Br No. 33-0371G)
158	NB	R20.28	R+	ON-RAMP FROM WB ROUTE 580
159R	NB	R23.32	R+	ON-RAMP FROM VILLAGE Pkwy
159L	NB	R23.32	L+	ON-RAMP FROM VILLAGE Pkwy
160	NB	R20.73	R+	MAINLINE - AMADOR VALLEY Blvd UC (Br No. 33-0356)
134R	SB	R21.73	R+	ON-RAMP FROM ALCOSTA Blvd
134L	SB	R21.73	L+	ON-RAMP FROM ALCOSTA Blvd
135	SB	21.64	R+	MAINLINE - 500' SOUTH OF SB ON-RAMP FROM ALCOSTA Blvd
136	SB	21.35	R+	MAINLINE - 2000' SOUTH OF SB ON-RAMP FROM ALCOSTA Blvd
137	SB	20.36	L+	OFF-RAMP TO WB 580

LOCATIONS OF CONSTRUCTION

LC-1

REVISED BY	DATE REVISED
LC	3/24/15

HUNG C. HSU — BER-LIN WEI
CALCULATED-DESIGNED BY — CHECKED BY
FUNCTIONAL SUPERVISOR — GEORGE LO

STATE OF CALIFORNIA - DEPARTMENT OF TRANSPORTATION
Caltrans® DESIGN

LAST REVISION 03-30-15 | DATE PLOTTED => 12-AUG-2015 | TIME PLOTTED => 09:10

Dist	COUNTY	ROUTE	POST MILES TOTAL PROJECT	SHEET No.	TOTAL SHEETS
04	Ala	580, 680	Var	3	143

REGISTERED CIVIL ENGINEER 3/24/15 DATE

3-30-15
PLANS APPROVAL DATE

REGISTERED PROFESSIONAL ENGINEER Ber-lin Wei No. 49855 Exp. 9-30-16 CIVIL STATE OF CALIFORNIA

THE STATE OF CALIFORNIA OR ITS OFFICERS OR AGENTS SHALL NOT BE RESPONSIBLE FOR THE ACCURACY OR COMPLETENESS OF SCANNED COPIES OF THIS PLAN SHEET.

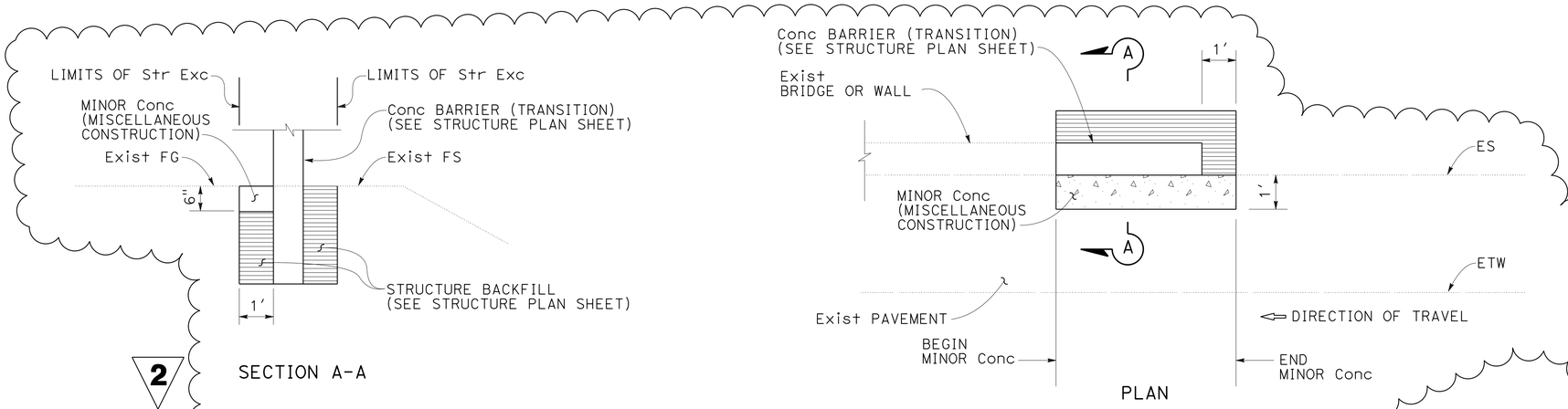

TYPICAL DETAILS FOR MINOR CONCRETE AT CONCRETE BARRIER (TRANSITION)

~~**NOTE:**~~

~~( )* REFER TO STRUCTURE PLAN SHEET NUMBER.~~

NOTES:

1. FOR MGS LOCATIONS, SEE SUMMARY OF QUANTITIES.
2. PLACE VEGETATION CONTROL (MINOR CONCRETE) UNDER NEW MGS ONLY.
3. FOR TYPE B2 CURB (Mod) DETAILS NOT SHOWN, USE TYPE B2 CURB SHOWN IN STANDARD PLANS.
4. ( )* REFER TO STRUCTURE PLAN SHEET NUMBER.

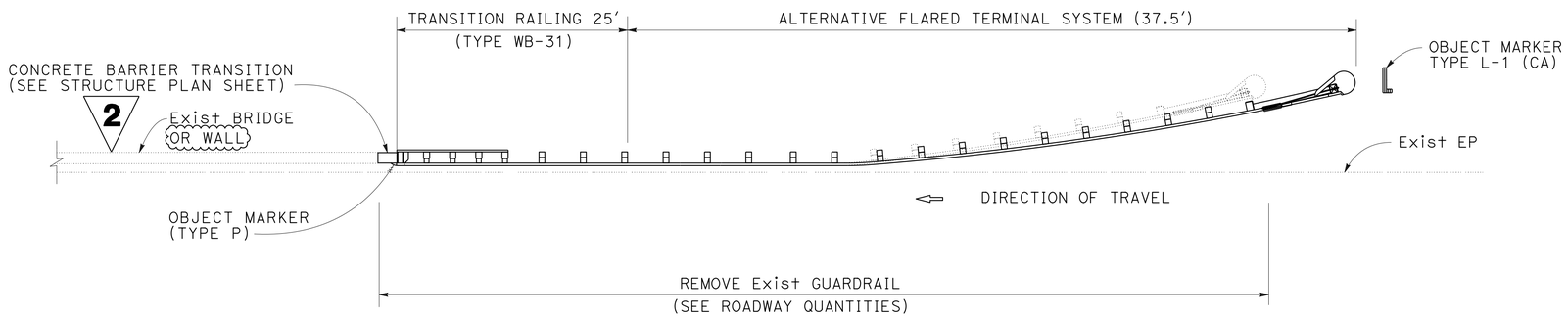

DETAIL A

LEGEND:

- MINOR CONCRETE (MISCELLANEOUS CONSTRUCTION)
- STRUCTURE BACKFILL
- DIRECTION OF TRAVEL
- OBJECT MARKER TYPE P
- CHANNELIZERS (SURFACE MOUNTED)
- ROADSIDE SIGN (ONE POST)

LOCATION No. 50W - ROUTE 580 WB MAINLINE - EDWARDS Ave UC (Br No. 33-0341) (3, 28)*
LOCATION No. 64R - ROUTE 580 WB OFF-RAMP TO BEAUMONT Ave/BRUCE St (3, 28)*
LOCATION No. 68 - ROUTE 580 WB ON-RAMP FROM PARK Blvd (16, 31)*
LOCATION No. 38R - ROUTE 580 EB ON-RAMP FROM EB LIBERTY St (2, 27)*
LOCATION No. 44R - ROUTE 580 EB ON-RAMP FROM SB FOOTHILL Blvd (Br No. 33-0334K) (2, 27)*
LOCATION No. 51E - ROUTE 580 EB MAINLINE - KUHNLE Ave UC (Br No. 33-0342) (3, 27)*
LOCATION No. 58 - ROUTE 580 EB OFF-RAMP TO SB MacARTHUR Blvd (17, 31)*
LOCATION No. 136 - ROUTE 680 SB MAINLINE 2000' - SOUTH OF SB ON-RAMP FROM ALCOSTA Blvd (16, 32)*
LOCATION No. 145 - ROUTE 680 NB MAINLINE 750' - NORTH OF PALM Ave OC (Br No. 33-0360) (16, 32)*
2 **LOCATION No. 16 - ROUTE 580 WB OFF-RAMP TO NB SAN RAMON Rd (15A, 31A)***
LOCATION No. 69 - ROUTE 580 EB MAINLINE - LAKE PARK Ave OC (Br No. 33-0314) (20C,31A)*

2 **REPLACED PER ADDENDUM No. 2 DATED AUGUST 13, 2015**

CONSTRUCTION DETAILS
NO SCALE

C-1

STATE OF CALIFORNIA - DEPARTMENT OF TRANSPORTATION
Caltrans® DESIGN
FUNCTIONAL SUPERVISOR GEORGE LO
CALCULATED-DESIGNED BY HUNG C. HSU
CHECKED BY BER-LIN WEI
REVISED BY LC
DATE REVISED 3/24/15

LAST REVISION 03-30-15 | DATE PLOTTED => 12-AUG-2015 | TIME PLOTTED => 09:10

Dist	COUNTY	ROUTE	POST MILES TOTAL PROJECT	SHEET No.	TOTAL SHEETS
04	Ala	580, 680	Var	8	143

REGISTERED CIVIL ENGINEER 3/24/15 DATE

3-30-15
PLANS APPROVAL DATE

REGISTERED PROFESSIONAL ENGINEER Ber-lin Wei No. 49855 Exp. 9-30-16 CIVIL STATE OF CALIFORNIA

THE STATE OF CALIFORNIA OR ITS OFFICERS OR AGENTS SHALL NOT BE RESPONSIBLE FOR THE ACCURACY OR COMPLETENESS OF SCANNED COPIES OF THIS PLAN SHEET.

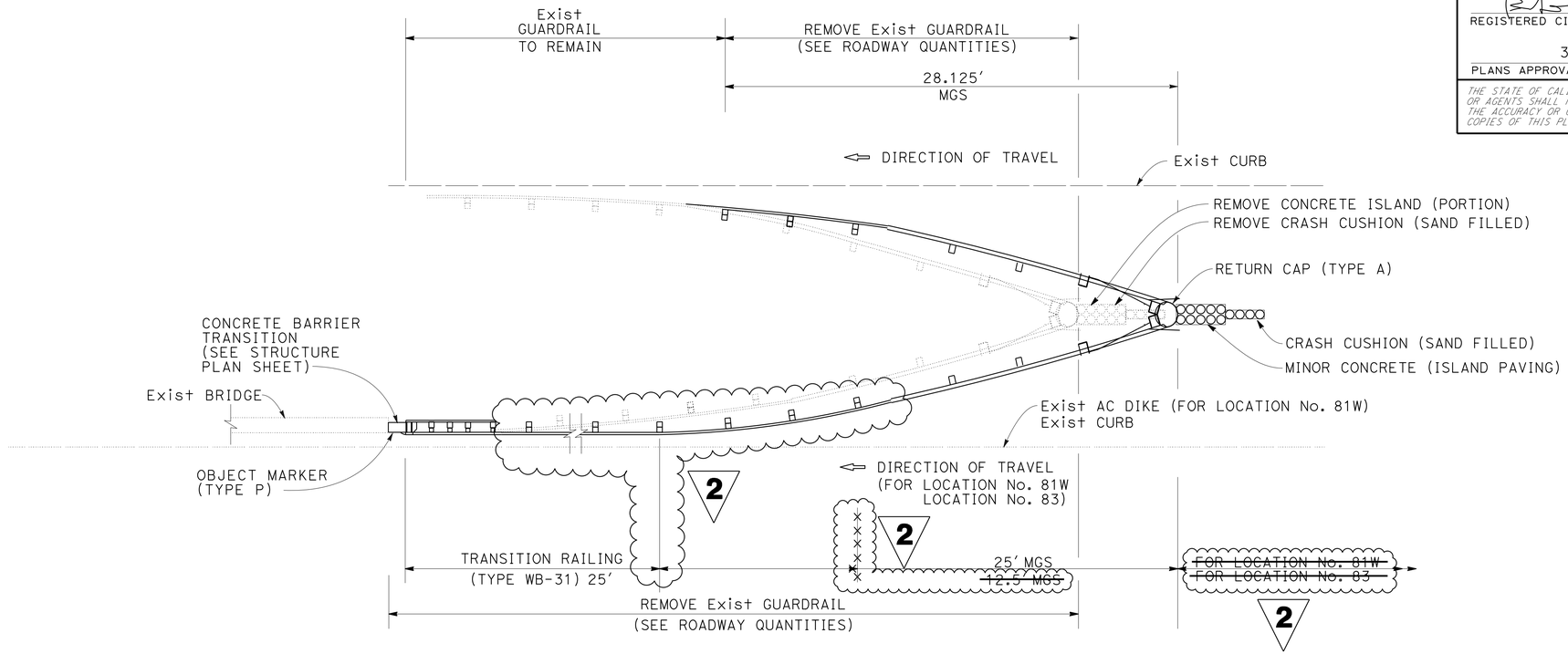

DETAIL C5

LOCATION No. 83 - ROUTE 580 WB **ON-RAMP FROM WB ROUTE 24/52ND St** **(2, 27)***
LOCATION No. 81W - ROUTE 580 WB **MAINLINE - WEST St UC (MARTIN LUTHER KING JR WAY UC/Br No. 33-0299A)** **(8, 29)***

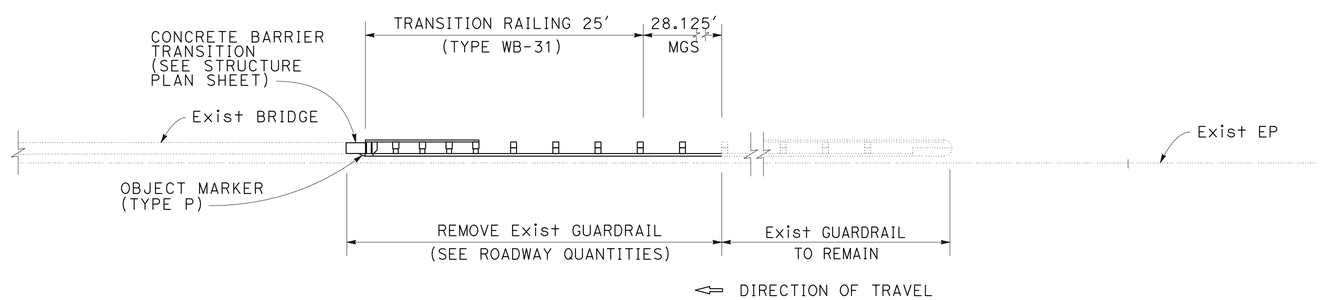

DETAIL C6

LOCATION No. 48 - ROUTE 580 EB **MAINLINE - GOLF LINKS Rd UC (Br No. 33-0354) (3, 27)***

2 **REPLACED PER ADDENDUM No. 2 DATED AUGUST 13, 2015** FOR NOTE, SEE SHEET C-1

CONSTRUCTION DETAILS
NO SCALE

C-6

HUNG C. HSU	REVISED BY
BER-LIN WEI	DATE REVISED
LC	3/24/15
CALCULATED-DESIGNED BY	
CHECKED BY	
FUNCTIONAL SUPERVISOR	
GEORGE LO	

STATE OF CALIFORNIA - DEPARTMENT OF TRANSPORTATION
Caltrans
DESIGN

LAST REVISION 03-30-15 DATE PLOTTED => 12-AUG-2015 TIME PLOTTED => 09:10

Dist	COUNTY	ROUTE	POST MILES TOTAL PROJECT	SHEET No.	TOTAL SHEETS
04	Ala	580, 680	Var	9	143

REGISTERED CIVIL ENGINEER 3/24/15 DATE

3-30-15
PLANS APPROVAL DATE

REGISTERED PROFESSIONAL ENGINEER Ber-lin Wei No. 49855 Exp. 9-30-16 CIVIL STATE OF CALIFORNIA

THE STATE OF CALIFORNIA OR ITS OFFICERS OR AGENTS SHALL NOT BE RESPONSIBLE FOR THE ACCURACY OR COMPLETENESS OF SCANNED COPIES OF THIS PLAN SHEET.

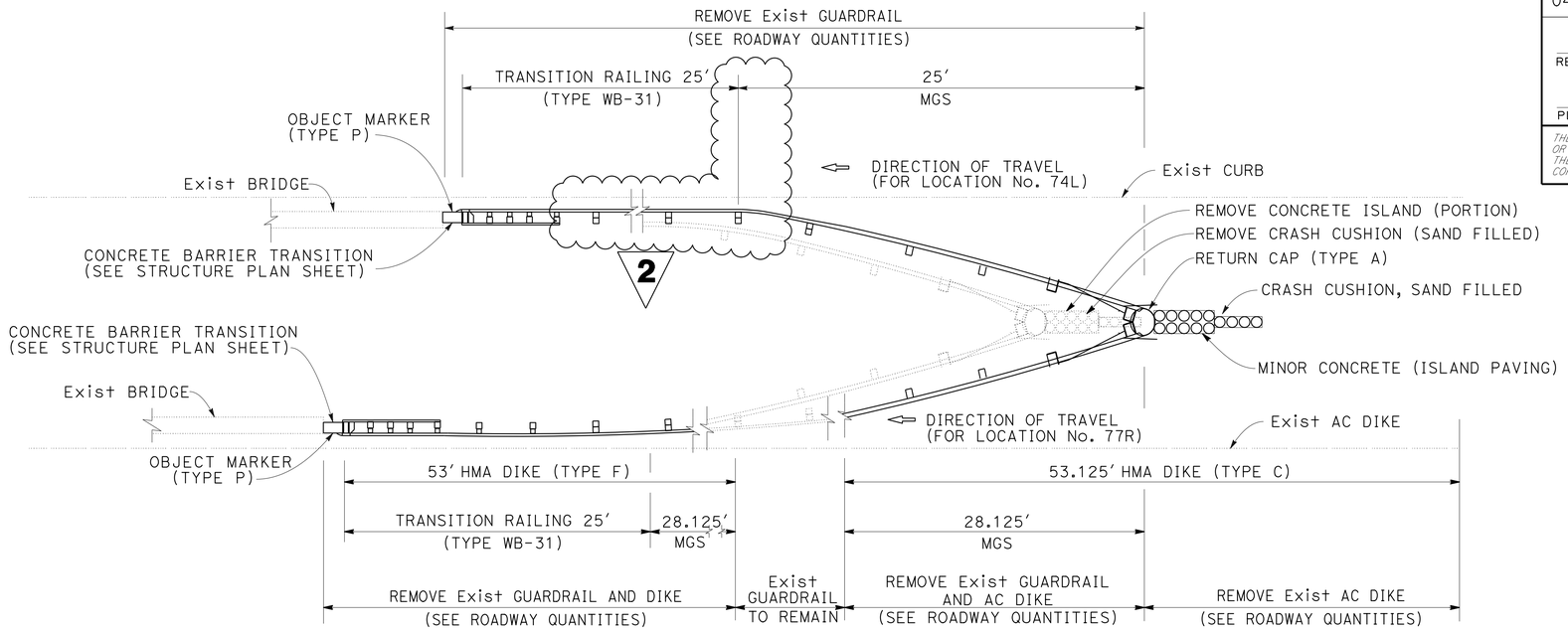

DETAIL C7

LOCATION No. 74L - ROUTE 580 WB OFF-RAMP TO WB ROUTE 24 (2, 27)*
LOCATION No. 77R - ROUTE 580 WB OFF-RAMP TO EB ROUTE 24 (2, 27)*

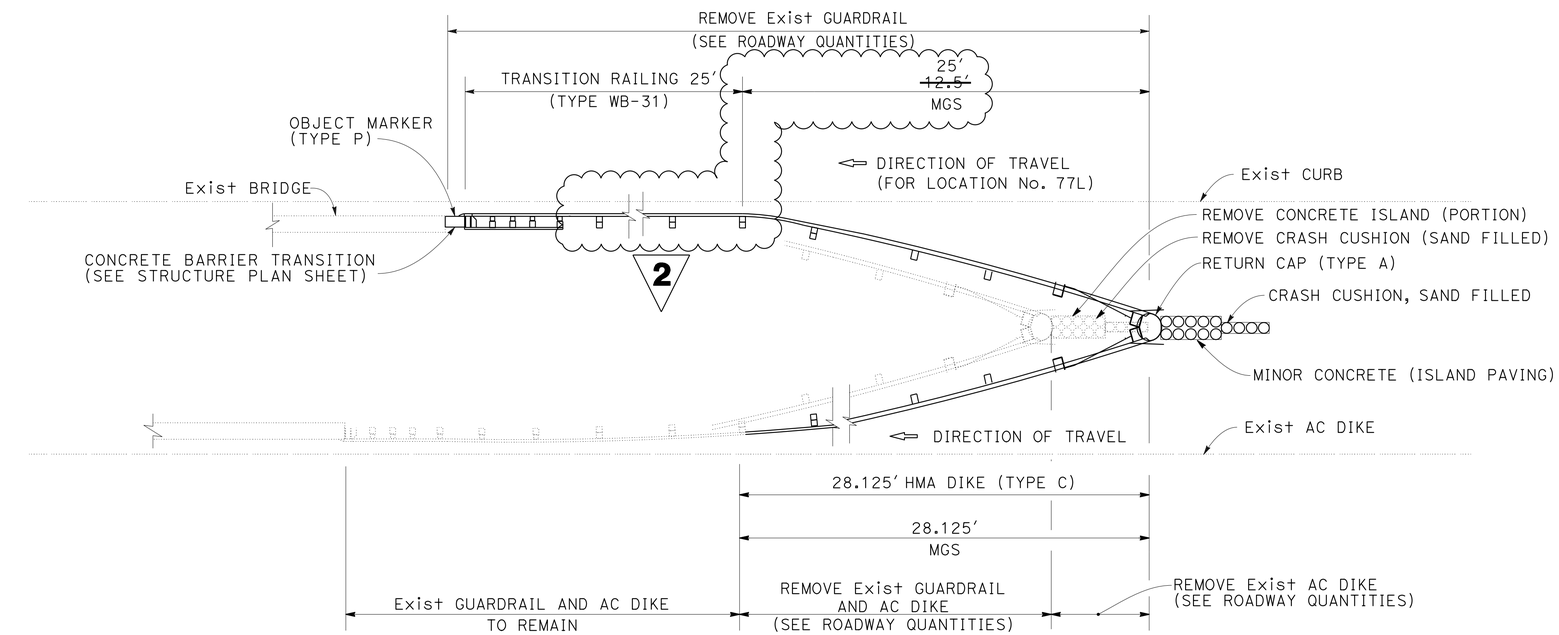

DETAIL C8

LOCATION No. 77L - ROUTE 580 WB OFF-RAMP TO EB ROUTE 24 (2, 27)*

2 REPLACED PER ADDENDUM No. 2 DATED AUGUST 13, 2015

FOR NOTE, SEE SHEET C-1

CONSTRUCTION DETAILS

NO SCALE

C-7

REVISED BY	DATE REVISED
LC	3/24/15

CALCULATED-DESIGNED BY: HUNG C. HSU
CHECKED BY: BER-LIN WEI
FUNCTIONAL SUPERVISOR: GEORGE LO

STATE OF CALIFORNIA - DEPARTMENT OF TRANSPORTATION
Caltrans
DESIGN

LAST REVISION 03-30-15 | DATE PLOTTED => 12-AUG-2015 | TIME PLOTTED => 09:10

Dist	COUNTY	ROUTE	POST MILES TOTAL PROJECT	SHEET No.	TOTAL SHEETS
04	Ala	580, 680	Var	12	143

REGISTERED CIVIL ENGINEER 3/24/15 DATE

3-30-15
PLANS APPROVAL DATE

REGISTERED PROFESSIONAL ENGINEER Ber-lin Wei No. 49855 Exp. 9-30-16 CIVIL STATE OF CALIFORNIA

THE STATE OF CALIFORNIA OR ITS OFFICERS OR AGENTS SHALL NOT BE RESPONSIBLE FOR THE ACCURACY OR COMPLETENESS OF SCANNED COPIES OF THIS PLAN SHEET.

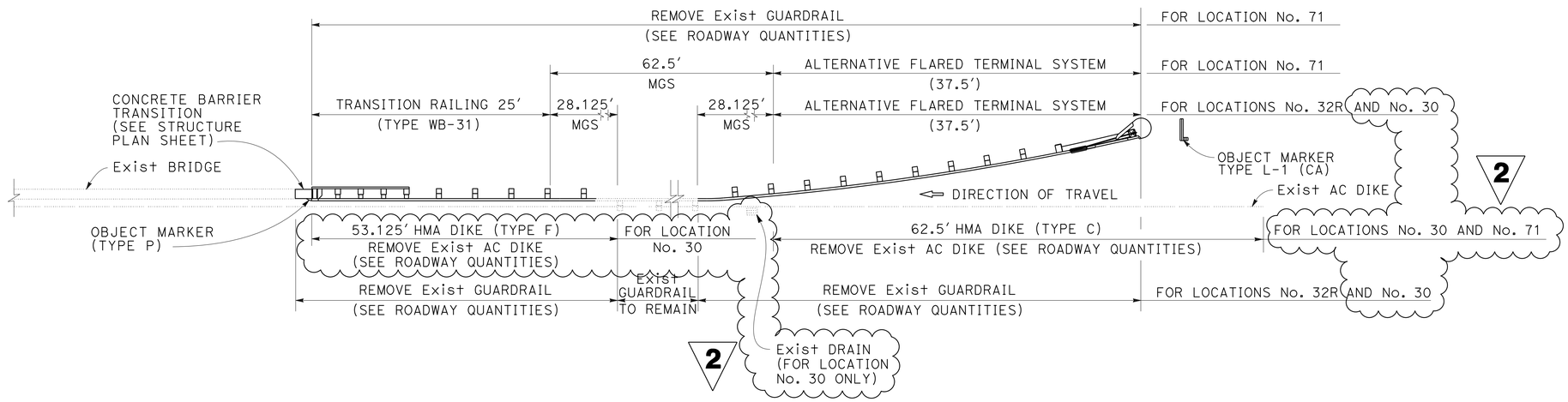

DETAIL D1

LOCATION No. 71 - ROUTE 580 WB	**OFF-RAMP TO SANTA CLARA Ave/OAKLAND Ave**	**(18, 31)***
LOCATION No. 32R - ROUTE 580 WB	**MAINLINE - STROBRIDGE Ave UC (BR No. 33-0189R)**	**(14, 31)***
2 **LOCATION No. 30 - ROUTE 580 EB**	**MAINLINE - REDWOOD Rd UC (BR No. 33-0193L)**	**(15A, 31A)***

2 **REPLACED PER ADDENDUM No. 2 DATED AUGUST 13, 2015**

2 FOR NOTES AND LEGEND, SEE SHEET C-1

CONSTRUCTION DETAILS

NO SCALE

C-10

STATE OF CALIFORNIA - DEPARTMENT OF TRANSPORTATION
Caltrans DESIGN

FUNCTIONAL SUPERVISOR: GEORGE LO
CALCULATED-DESIGNED BY: HUNG C. HSU
CHECKED BY: BER-LIN WEI
REVISED BY: LC
DATE REVISED: 3/24/15

LAST REVISION 03-30-15 | DATE PLOTTED => 12-AUG-2015 | TIME PLOTTED => 09:10

Dist	COUNTY	ROUTE	POST MILES TOTAL PROJECT	SHEET No.	TOTAL SHEETS
04	Ala	580, 680	Var	13	143

REGISTERED CIVIL ENGINEER DATE 3/24/15

3-30-15
PLANS APPROVAL DATE

REGISTERED PROFESSIONAL ENGINEER Ber-lin Wei No. 49855 Exp. 9-30-16 CIVIL STATE OF CALIFORNIA

THE STATE OF CALIFORNIA OR ITS OFFICERS OR AGENTS SHALL NOT BE RESPONSIBLE FOR THE ACCURACY OR COMPLETENESS OF SCANNED COPIES OF THIS PLAN SHEET.

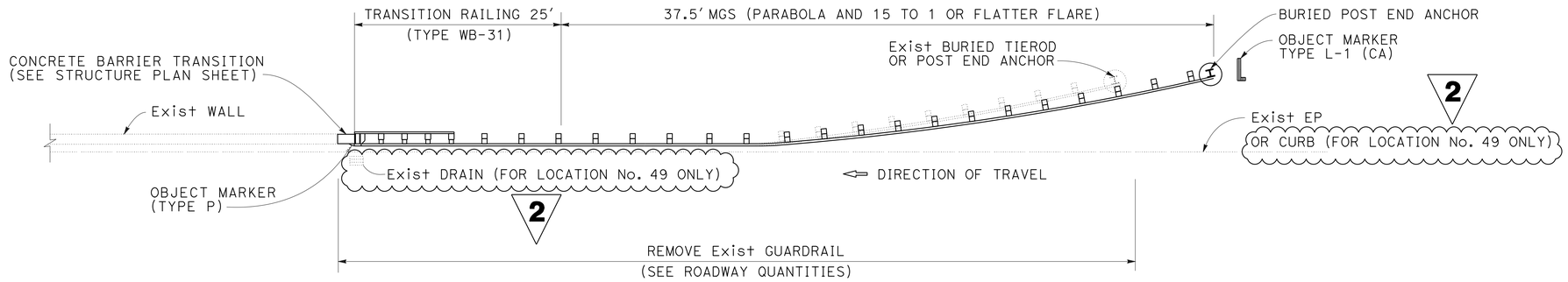

DETAIL D2

LOCATION No. 41W - ROUTE 580 WB MAINLINE - GRAND Ave OC (Br No. 33-0330) (26, 30)*
LOCATION No. 54 - ROUTE 580 WB ON-RAMP FROM MOUNTAIN Blvd/ROUTE 13 (21, 30)*
LOCATION No. 57 - ROUTE 580 WB MAINLINE - BIRDSALL Ave POC (Br No. 33-0328) (21, 30)*
2 LOCATION No. 49 - ROUTE 580 EB MAINLINE - OAK KNOLL Blvd OC (Br No. 33-0353) (20B, 31A)*

2 REPLACED PER ADDENDUM No. 2 DATED AUGUST 13, 2015

2
FOR NOTES AND LEGEND, SEE SHEET C-1

CONSTRUCTION DETAILS
NO SCALE

C-11

STATE OF CALIFORNIA - DEPARTMENT OF TRANSPORTATION
Caltrans® DESIGN

FUNCTIONAL SUPERVISOR: GEORGE LO
CALCULATED-DESIGNED BY: HUNG C. HSU
CHECKED BY: BER-LIN WEI
REVISED BY: LC
DATE REVISED: 3/24/15

LAST REVISION 03-30-15
DATE PLOTTED => 12-AUG-2015
TIME PLOTTED => 09:10

Dist	COUNTY	ROUTE	POST MILES TOTAL PROJECT	SHEET No.	TOTAL SHEETS
04	Ala	580, 680	Var	18	143

REGISTERED CIVIL ENGINEER DATE 3/24/15

3-30-15
PLANS APPROVAL DATE

REGISTERED PROFESSIONAL ENGINEER Ber-lin Wei No. 49855 Exp. 9-30-16 CIVIL STATE OF CALIFORNIA

THE STATE OF CALIFORNIA OR ITS OFFICERS OR AGENTS SHALL NOT BE RESPONSIBLE FOR THE ACCURACY OR COMPLETENESS OF SCANNED COPIES OF THIS PLAN SHEET.

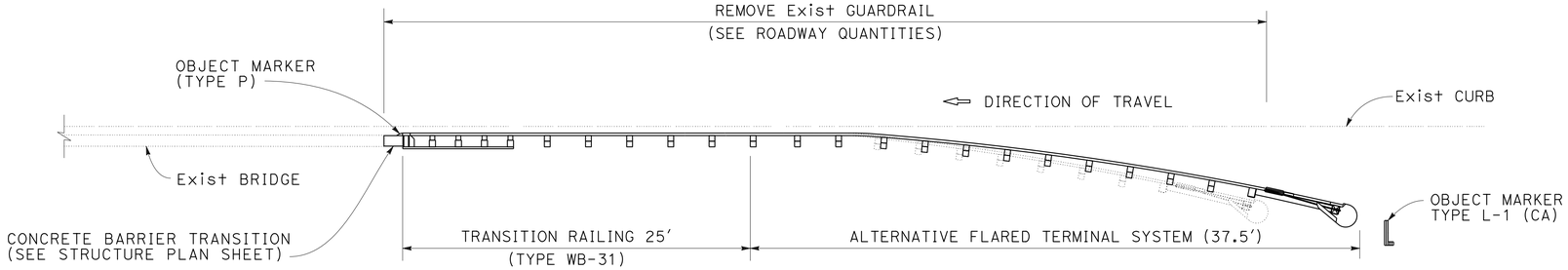

DETAIL D10

LOCATION No. 44L - ROUTE 580 EB ON-RAMP FROM SB FOOTHILL Blvd (Br No. 33-0334K) (11, 29)*

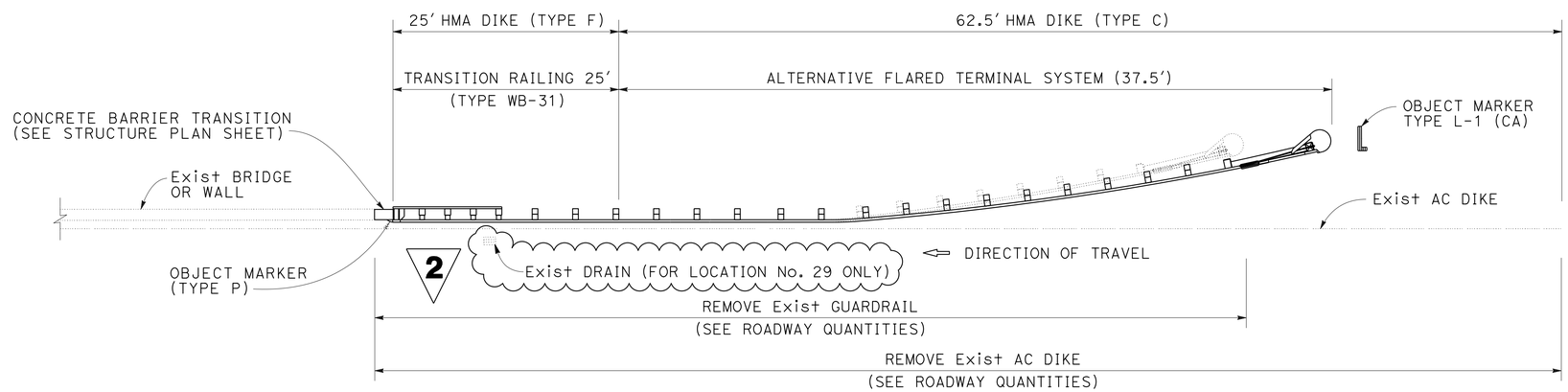

DETAIL D11

LOCATION No. 75 - ROUTE 580 EB MAINLINE - WEBSTER St UC (Br No. 33-0296) (3, 27)*

LOCATION No. 61W - ROUTE 580 WB MAINLINE - BOSTON Ave OC (Br No. 33-0323) (21, 30)*

2 **LOCATION No. 29 - ROUTE 580 EB MAINLINE - CROW Cr (Br No. 33-0232L) (15A, 31A)***

2 **REPLACED PER ADDENDUM No. 2 DATED AUGUST 13, 2015**

FOR NOTES AND LEGEND, SEE SHEET C-1

CONSTRUCTION DETAILS

NO SCALE

C-16

STATE OF CALIFORNIA - DEPARTMENT OF TRANSPORTATION
Caltrans® DESIGN

FUNCTIONAL SUPERVISOR: GEORGE LO
CALCULATED-DESIGNED BY: HUNG C. HSU
CHECKED BY: BER-LIN WEI
REVISED BY: LC
DATE REVISED: 3/24/15

LAST REVISION 03-30-15
DATE PLOTTED => 12-AUG-2015
TIME PLOTTED => 09:10

Dist	COUNTY	ROUTE	POST MILES TOTAL PROJECT	SHEET No.	TOTAL SHEETS
04	Ala	580, 680	Var	21	143

REGISTERED CIVIL ENGINEER 3/24/15 DATE

3-30-15
PLANS APPROVAL DATE

REGISTERED PROFESSIONAL ENGINEER Ber-lin Wei No. 49855 Exp. 9-30-16 CIVIL STATE OF CALIFORNIA

THE STATE OF CALIFORNIA OR ITS OFFICERS OR AGENTS SHALL NOT BE RESPONSIBLE FOR THE ACCURACY OR COMPLETENESS OF SCANNED COPIES OF THIS PLAN SHEET.

2

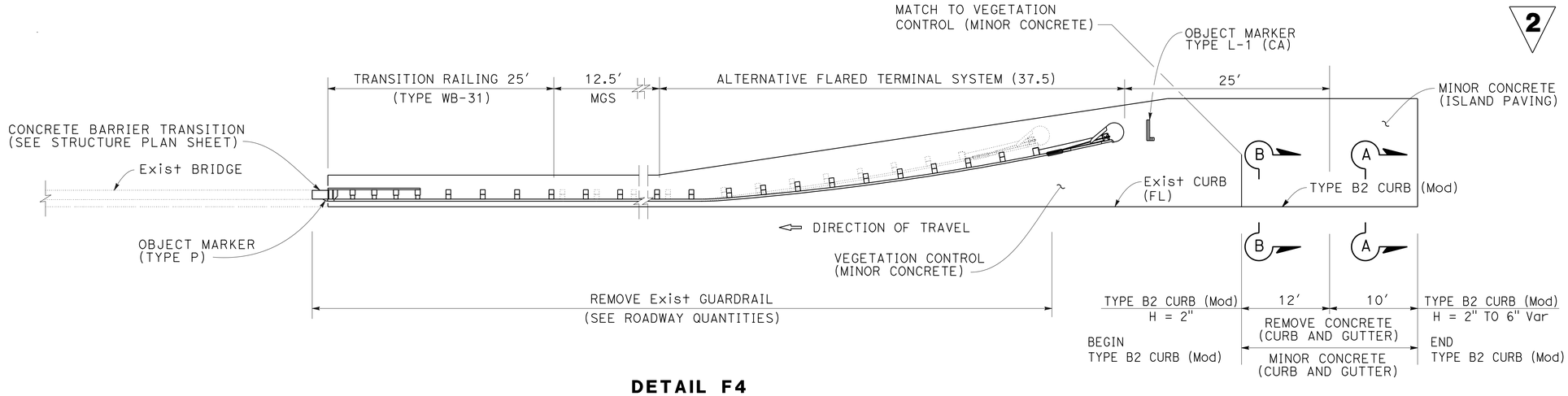

DETAIL F4

LOCATION No. 55 - ROUTE 580 WB MAINLINE - MacARTHUR Blvd UC (Br No. 33-0316) (7, 28)*

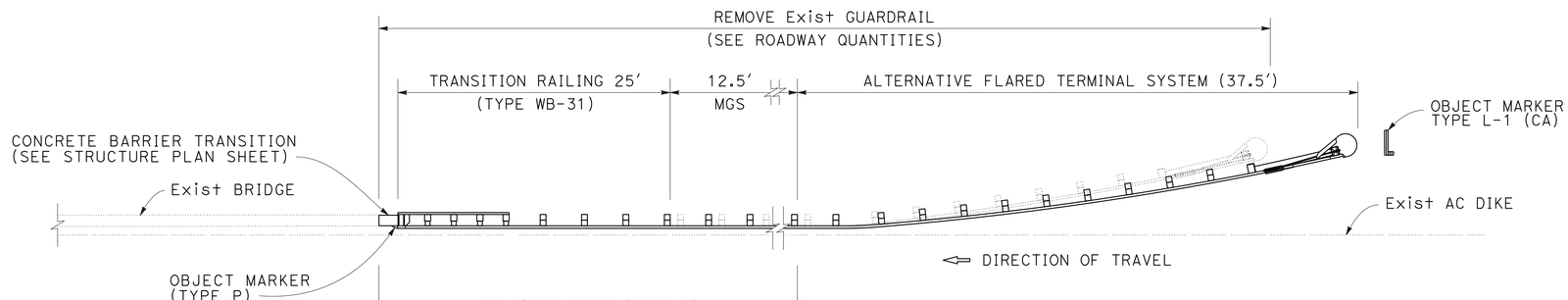

DETAIL F5

LOCATION No. 45E - ROUTE 580 EB MAINLINE - FOOTHILL Blvd UC (Br No. 33-0335) (3, 27)*

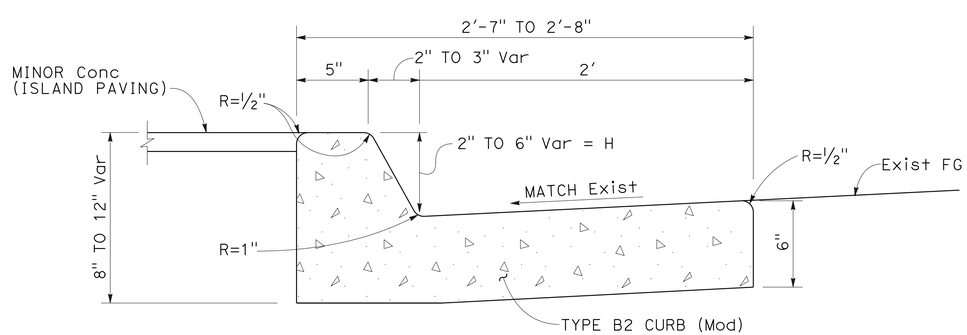

SECTION A-A

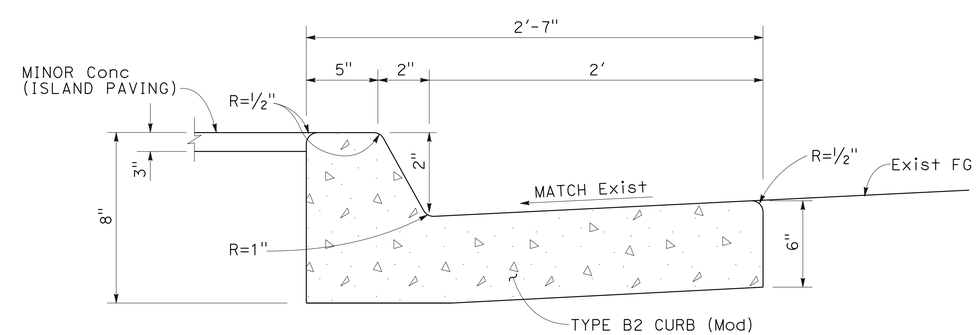

SECTION B-B

TYPE B2 CURB (Mod)

2 **REPLACED PER ADDENDUM No. 2 DATED AUGUST 13, 2015**

FOR NOTES AND LEGEND, SEE SHEET C-1

CONSTRUCTION DETAILS
NO SCALE

C-19

REVISED BY	DATE REVISED
LC	3/24/15

CALCULATED-DESIGNED BY: HUNG C. HSU
CHECKED BY: BER-LIN WEI
FUNCTIONAL SUPERVISOR: GEORGE LO

STATE OF CALIFORNIA - DEPARTMENT OF TRANSPORTATION
Caltrans® DESIGN

LAST REVISION 03-30-15
DATE PLOTTED => 12-AUG-2015
TIME PLOTTED => 09:10

Dist	COUNTY	ROUTE	POST MILES TOTAL PROJECT	SHEET No.	TOTAL SHEETS
04	Ala	580, 680	Var	23	143

REGISTERED CIVIL ENGINEER 3/24/15 DATE

3-30-15
PLANS APPROVAL DATE

REGISTERED PROFESSIONAL ENGINEER Ber-lin Wei No. 49855 Exp. 9-30-16 CIVIL STATE OF CALIFORNIA

THE STATE OF CALIFORNIA OR ITS OFFICERS OR AGENTS SHALL NOT BE RESPONSIBLE FOR THE ACCURACY OR COMPLETENESS OF SCANNED COPIES OF THIS PLAN SHEET.

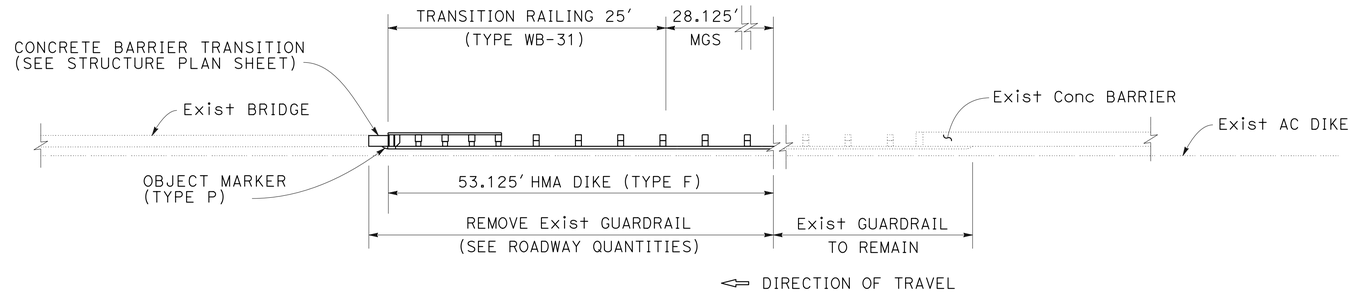

DETAIL G

LOCATION No. 12 - ROUTE 580 EB MAINLINE - DOUGHERTY Rd OH (Br No. 33-0150L)
(ACCESS Rd UC / BART DUBLIN-PLEASANTON STATION) (15, 31)*

2 **LOCATION No. 26 - ROUTE 580 EB MAINLINE - CROW CANYON Rd UC (Br No. 33-0233L) (15A, 31A)***

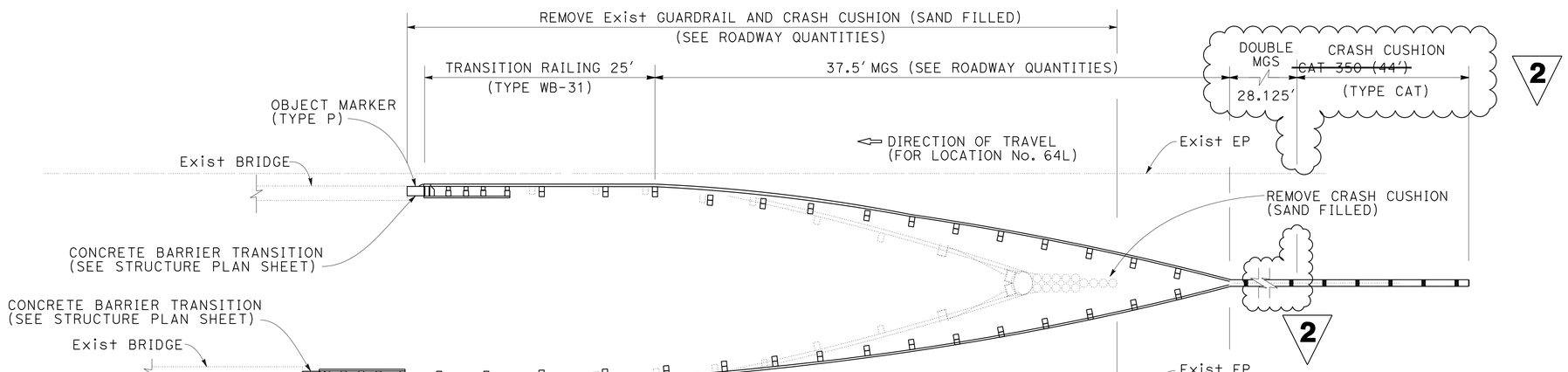

DETAIL H1

LOCATION No. 64L - ROUTE 580 WB OFF-RAMP TO BEAUMONT Ave/BRUCE St (12, 29)*
LOCATION No. 65W - ROUTE 580 WB MAINLINE - 14TH Ave UC (Br No. 33-0309R) (6, 28)*

2 **REPLACED PER ADDENDUM No. 2 DATED AUGUST 13, 2015**

FOR NOTES AND LEGEND, SEE SHEET C-1

CONSTRUCTION DETAILS

NO SCALE

C-21

STATE OF CALIFORNIA - DEPARTMENT OF TRANSPORTATION
Caltrans® DESIGN

REVISED BY	DATE REVISED	CALCULATED-DESIGNED BY	CHECKED BY	FUNCTIONAL SUPERVISOR
LC	3/24/15	HUNG C. HSU	BER-LIN WEI	GEORGE LO

LAST REVISION 03-30-15 | DATE PLOTTED => 12-AUG-2015 | TIME PLOTTED => 09:10

Dist	COUNTY	ROUTE	POST MILES TOTAL PROJECT	SHEET No.	TOTAL SHEETS
04	Ala	580, 680	Var	24	143

REGISTERED CIVIL ENGINEER 3/24/15 DATE

3-30-15
PLANS APPROVAL DATE

REGISTERED PROFESSIONAL ENGINEER Ber-lin Wei No. 49855 Exp. 9-30-16 CIVIL STATE OF CALIFORNIA

THE STATE OF CALIFORNIA OR ITS OFFICERS OR AGENTS SHALL NOT BE RESPONSIBLE FOR THE ACCURACY OR COMPLETENESS OF SCANNED COPIES OF THIS PLAN SHEET.

2

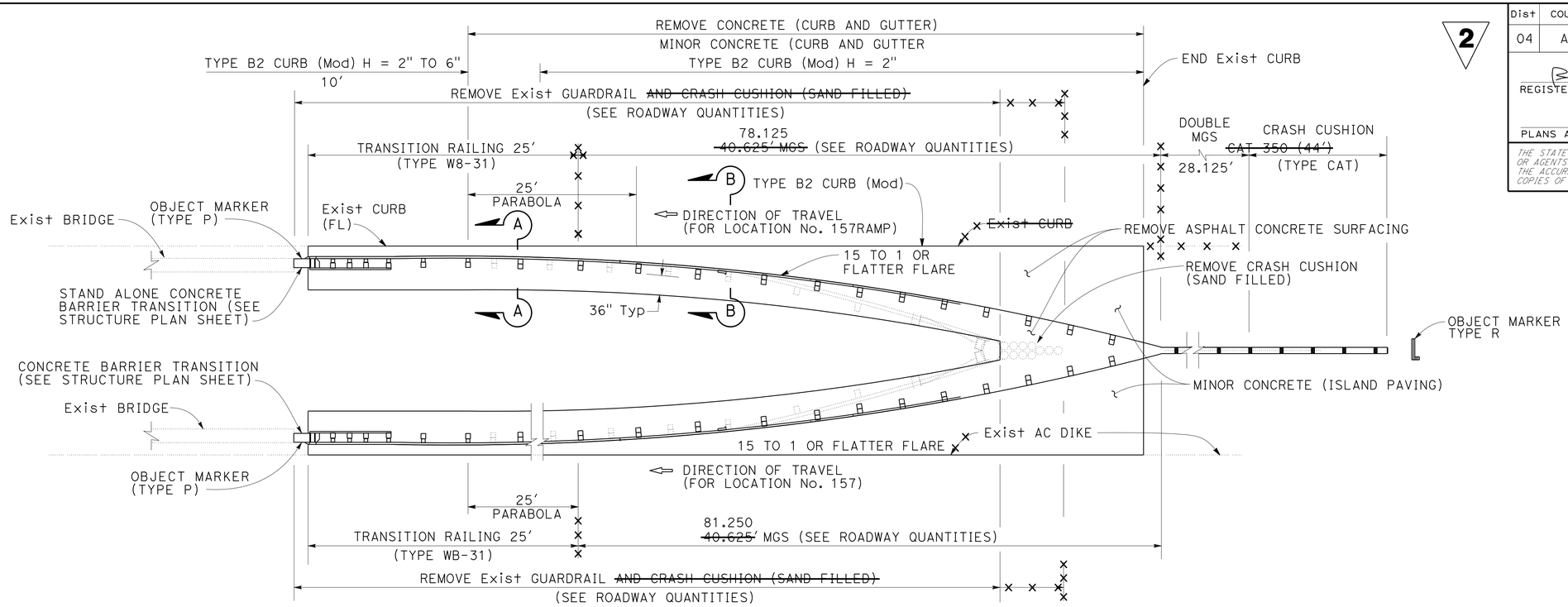

NOTE: SEE SHEET C-19 FOR SECTION A-A AND SECTION B-B.

DETAIL H2

LOCATION No. 157 - ROUTE 680 NB MAINLINE - ROUTE 680-580 SEPARATION (Br No. 33-0371G) (2, 32)*
LOCATION No. 157RAMP - ROUTE 680 NB LOOP RAMP - ROUTE 680-580 SEPARATION (Br No. 33-0371G) (11, 32)*

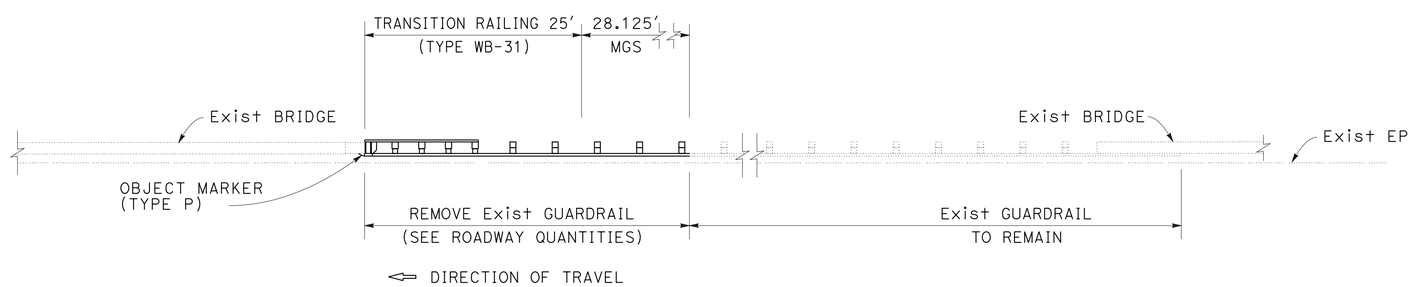

DETAIL I

LOCATION No. 28 - ROUTE 580 WB MAINLINE AT CROW CREEK (Br No. 33-0232R) ~~(11, 32)*~~

2 **REPLACED PER ADDENDUM No. 2 DATED AUGUST 13, 2015**

FOR NOTES AND LEGEND, SEE SHEET C-1

CONSTRUCTION DETAILS
NO SCALE

C-22

STATE OF CALIFORNIA - DEPARTMENT OF TRANSPORTATION
Caltrans® DESIGN
FUNCTIONAL SUPERVISOR: GEORGE LO
CALCULATED-DESIGNED BY: HUNG C. HSU
CHECKED BY: BER-LIN WEI
REVISED BY: LC
DATE REVISED: 3/24/15

LAST REVISION 03-30-15 | DATE PLOTTED => 12-AUG-2015 | TIME PLOTTED => 09:10

Dist	COUNTY	ROUTE	POST MILES TOTAL PROJECT	SHEET No.	TOTAL SHEETS
04	Ala	580, 680	Var	25	143

REGISTERED CIVIL ENGINEER DATE 3/24/15

PLANS APPROVAL DATE 3-30-15

REGISTERED PROFESSIONAL ENGINEER Ber-lin Wei No. 49855 Exp. 9-30-16 CIVIL STATE OF CALIFORNIA

THE STATE OF CALIFORNIA OR ITS OFFICERS OR AGENTS SHALL NOT BE RESPONSIBLE FOR THE ACCURACY OR COMPLETENESS OF SCANNED COPIES OF THIS PLAN SHEET.

2

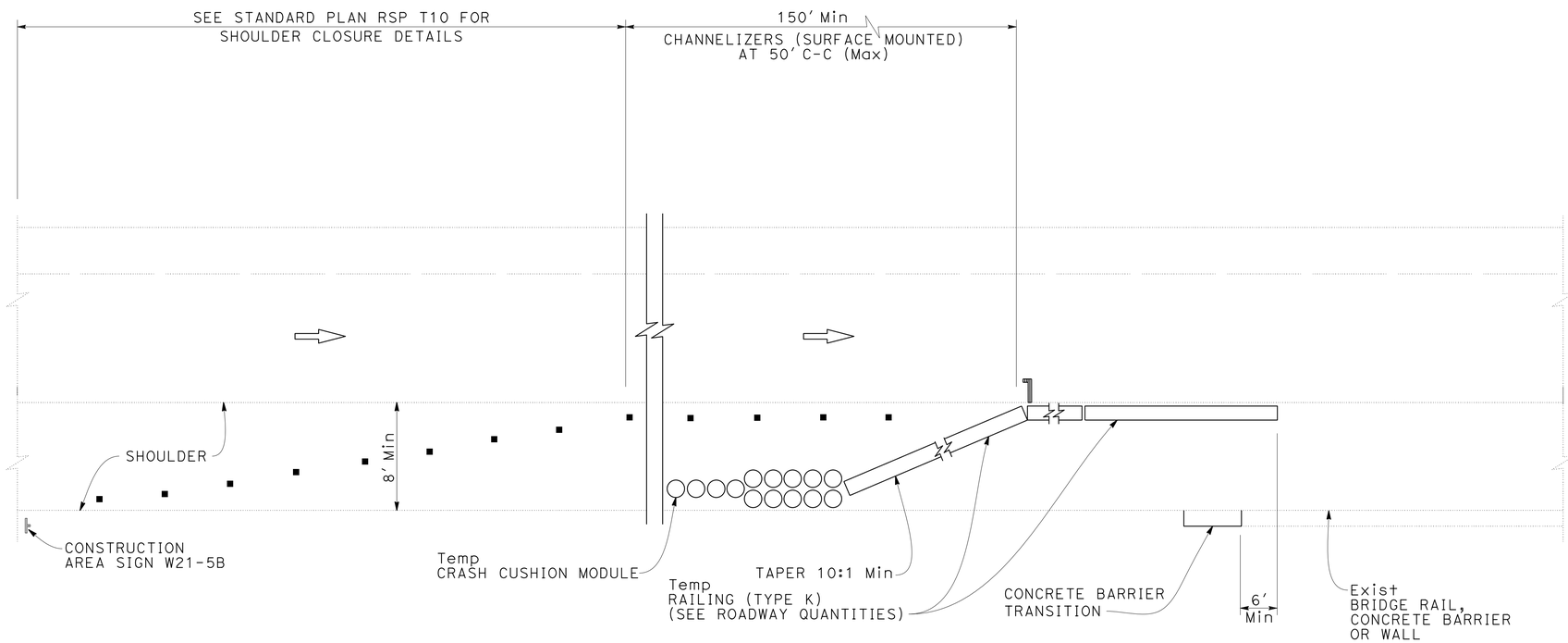

SHOULDER CLOSURE PLAN (1)

TRAFFIC CONTROL SYSTEM DURING CONSTRUCTION OF CONCRETE BARRIER TRANSITION

2 **REPLACED PER ADDENDUM No. 2 DATED AUGUST 13, 2015**

FOR NOTES AND LEGEND, SEE SHEET C-1

CONSTRUCTION DETAILS

NO SCALE

C-23

STATE OF CALIFORNIA - DEPARTMENT OF TRANSPORTATION

Caltrans® DESIGN

FUNCTIONAL SUPERVISOR: GEORGE LO

CALCULATED-DESIGNED BY: HUNG C. HSU

CHECKED BY: BER-LIN WEI

REVISED BY: LC

DATE REVISED: 3/24/15

LAST REVISION 03-30-15 | DATE PLOTTED => 12-AUG-2015 | TIME PLOTTED => 09:11

Dist	COUNTY	ROUTE	POST MILES TOTAL PROJECT	SHEET No.	TOTAL SHEETS
04	Ala	580, 680	Var	25A	143

REGISTERED CIVIL ENGINEER 3/24/15 DATE

3-30-15
PLANS APPROVAL DATE

REGISTERED PROFESSIONAL ENGINEER Ber-lin Wei No. 49855 Exp. 9-30-16 CIVIL STATE OF CALIFORNIA

THE STATE OF CALIFORNIA OR ITS OFFICERS OR AGENTS SHALL NOT BE RESPONSIBLE FOR THE ACCURACY OR COMPLETENESS OF SCANNED COPIES OF THIS PLAN SHEET.

2

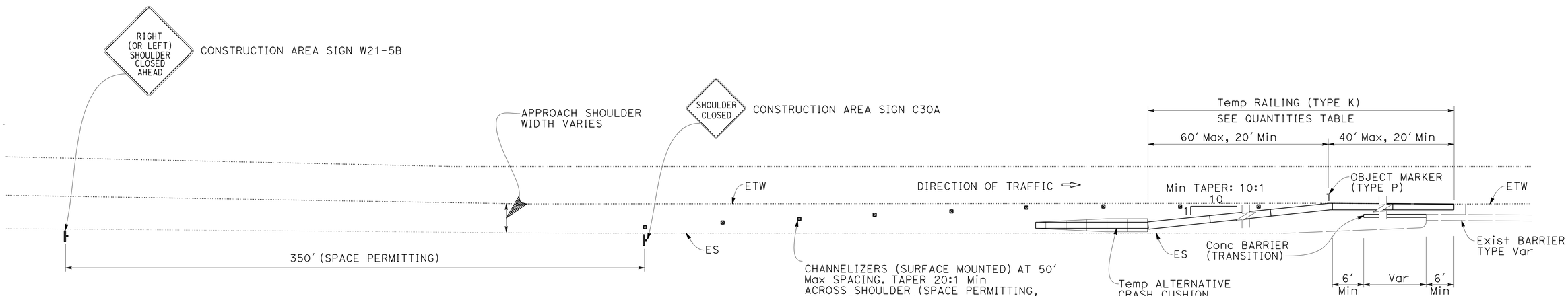

SHOULDER CLOSURE PLAN (2)
DURING CONSTRUCTION OF CONCRETE BARRIER TRANSITION

2 **ADDED PER ADDENDUM No. 2 DATED AUGUST 13, 2015**

FOR NOTES AND LEGEND, SEE SHEET C-1

CONSTRUCTION DETAILS
NO SCALE

C-23A

STATE OF CALIFORNIA - DEPARTMENT OF TRANSPORTATION
Caltrans
DESIGN

FUNCTIONAL SUPERVISOR: GEORGE LO
CALCULATED-DESIGNED BY: HUNG C. HSU
CHECKED BY: BER-LIN WEI
REVISED BY: LC
DATE REVISED: 3/24/15

LAST REVISION 03-30-15
DATE PLOTTED => 12-AUG-2015
TIME PLOTTED => 09:11

Dist	COUNTY	ROUTE	POST MILES TOTAL PROJECT	SHEET No.	TOTAL SHEETS
04	Ala	580, 680	Var	25B	143

REGISTERED CIVIL ENGINEER 3/24/15 DATE

3-30-15
PLANS APPROVAL DATE

REGISTERED PROFESSIONAL ENGINEER Ber-lin Wei No. 49855 Exp. 9-30-16 CIVIL STATE OF CALIFORNIA

THE STATE OF CALIFORNIA OR ITS OFFICERS OR AGENTS SHALL NOT BE RESPONSIBLE FOR THE ACCURACY OR COMPLETENESS OF SCANNED COPIES OF THIS PLAN SHEET.

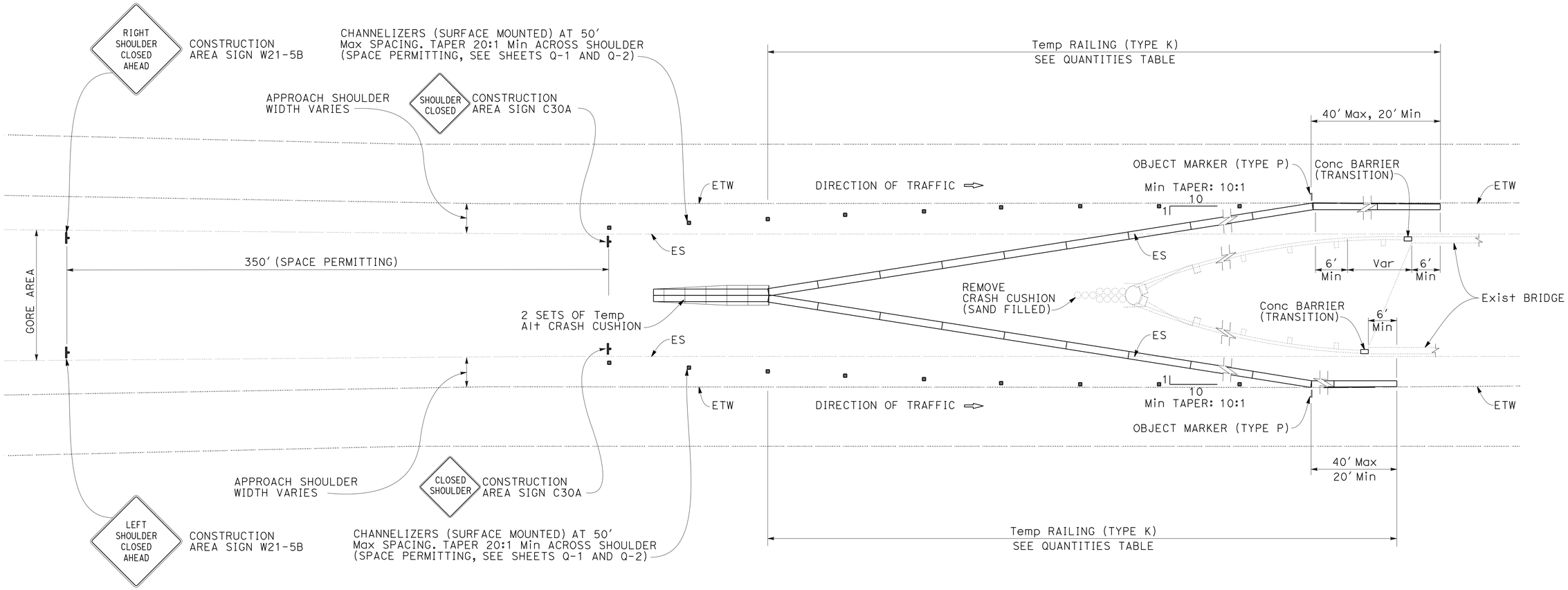

SHOULDER CLOSURE PLAN (3)
DURING CONSTRUCTION OF CONCRETE BARRIER TRANSITION

2 **ADDED PER ADDENDUM No. 2 DATED AUGUST 13, 2015**

FOR NOTES AND LEGEND, SEE SHEET C-1

CONSTRUCTION DETAILS
NO SCALE

C-23B

STATE OF CALIFORNIA - DEPARTMENT OF TRANSPORTATION
Caltrans® DESIGN

FUNCTIONAL SUPERVISOR: GEORGE LO
CALCULATED-DESIGNED BY: HUNG C. HSU
CHECKED BY: BER-LIN WEI
REVISED BY: LC
DATE REVISED: 3/24/15

LAST REVISION 03-30-15 | DATE PLOTTED => 12-AUG-2015 | TIME PLOTTED => 09:11

Dist	COUNTY	ROUTE	POST MILES TOTAL PROJECT	SHEET No.	TOTAL SHEETS
04	Ala	580, 680	Var	26	143

REGISTERED CIVIL ENGINEER 3/24/15 DATE

3-30-15
PLANS APPROVAL DATE

REGISTERED PROFESSIONAL ENGINEER Ber-lin Wei No. 49855 Exp. 9-30-16 CIVIL STATE OF CALIFORNIA

THE STATE OF CALIFORNIA OR ITS OFFICERS OR AGENTS SHALL NOT BE RESPONSIBLE FOR THE ACCURACY OR COMPLETENESS OF SCANNED COPIES OF THIS PLAN SHEET.

2

NOTES: (FOR THIS SHEET ONLY)

1. STANDARD 6′ POST MAY BE WOOD OR STEEL. SEE STANDARD PLAN RSP A77L1 FOR ADDITIONAL DETAILS NOT SHOWN.
2. CRT POST MUST BE WOOD.
3. GUARD RAIL ELEMENTS ARE STANDARD 12′-6" LENGTH BETWEEN SPLICES.
4. ON ONE LANE ROAD, THE NEAR SIDE POST DO NOT NEED TO BE CRT POST.

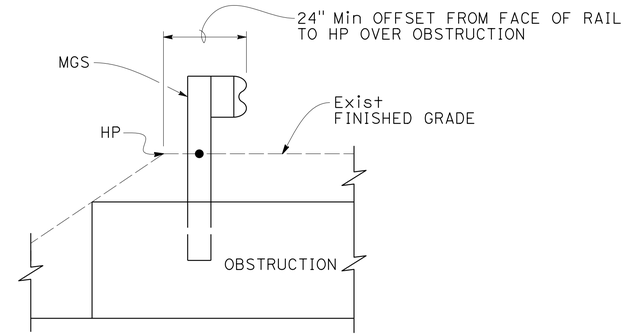

SECTION A-A

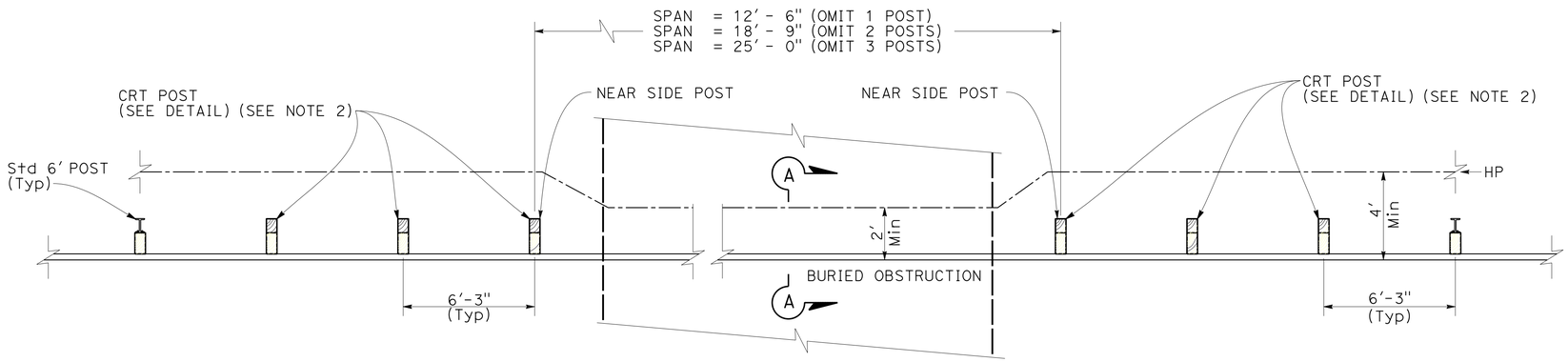

PLAN

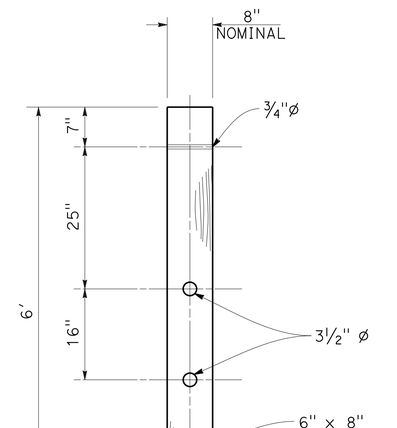

CONTROLLED RELEASING TERMINAL (CRT) POST DETAIL

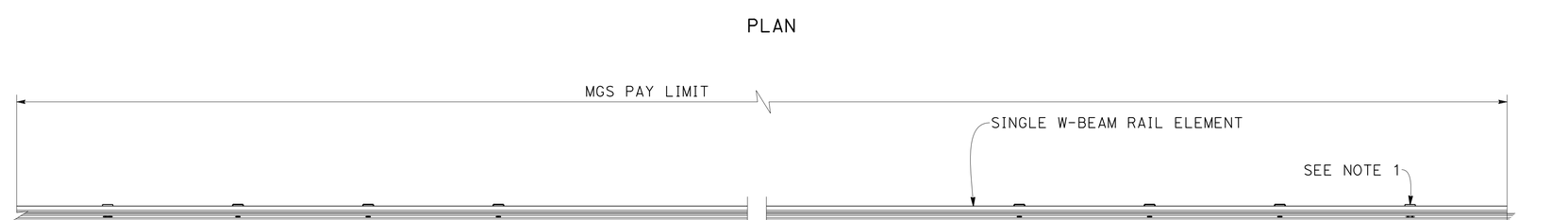

ELEVATION

MIDWEST GUARD RAIL SYSTEM (OMIT 1 TO 3 POSTS)

2 **REPLACED PER ADDENDUM No. 2 DATED AUGUST 13, 2015**

FOR NOTES AND LEGEND, SEE SHEET C-1

CONSTRUCTION DETAILS

NO SCALE

C-24

REVISED BY	DATE REVISED
LC	3/24/15

HUNG C. HSU
CALCULATED-DESIGNED BY: HUNG C. HSU
CHECKED BY: BER-LIN WEI
FUNCTIONAL SUPERVISOR: GEORGE LO

STATE OF CALIFORNIA - DEPARTMENT OF TRANSPORTATION
DESIGN

LAST REVISION 03-30-15
DATE PLOTTED => 12-AUG-2015
TIME PLOTTED => 09:11

Dist	COUNTY	ROUTE	POST MILES TOTAL PROJECT	SHEET No.	TOTAL SHEETS
04	Ala	580, 680	Var	27	143

2

REGISTERED CIVIL ENGINEER 3/24/15 DATE

3-30-15
PLANS APPROVAL DATE

REGISTERED PROFESSIONAL ENGINEER Jiangfan Chen No. 77248 Exp. 6-30-15 CIVIL STATE OF CALIFORNIA

THE STATE OF CALIFORNIA OR ITS OFFICERS OR AGENTS SHALL NOT BE RESPONSIBLE FOR THE ACCURACY OR COMPLETENESS OF SCANNED COPIES OF THIS PLAN SHEET.

TEMPORARY WATER POLLUTION CONTROL QUANTITIES

LOCATION No.	ROUTE	DIRECTION	SHOULDER	POST MILE	TEMPORARY FIBER ROLL	TEMPORARY HYDRAULIC MULCH (BFM)	TEMPORARY DRAINAGE INLET PROTECTION
					LF	SQYD	EA
16	580	WB	R+	R21.20	63	30	1
34	580	WB	R+	R30.55	95	47	1
36	580	WB	R+	R31.34			1
40	580	WB	R+	R32.72			2
41W	580	WB	R+	R33.94	50	16	
45W	580	WB	R+	R35.05	50		
46W	580	WB	R+	R35.71	50		
47	580	WB	R+	R36.34	50		1
50W	580	WB	R+	R38.31	50		
51W	580	WB	R+	R38.92			1
52	580	WB	R+	R39.37		60	
55	580	WB	R+	R39.77	50		1
57	580	WB	R+	R39.93		16	
59W	580	WB	R+	R40.08	50		1
61W	580	WB	R+	R41.33	70		
64L	580	WB	L+	R42.07		28	
67W	580	WB	R+	R42.67		28	
65W	580	WB	R+	R42.07			1
64R	580	WB	R+	R42.07	50		1
66W	580	WB	R+	R42.18		28	1
68	580	WB	R+	42.89	50		
71	580	WB	R+	44.08	100	45	
73	580	WB	R+	44.51	100	45	
74L	580	WB	L+	44.86		30	
74R	580	WB	R+	44.86		30	
77L	580	WB	L+	45.05		30	
77R	580	WB	R+	45.05		30	
81W	580	WB	R+	45.25		13	1
83	580	WB	R+	45.57		17	
84	580	WB	R+	45.74			1
86L	580	WB	L+	46.01	70	37	
26	580	EB	R+	R28.41	60		
29	580	EB	R+	R28.62	60	52	
30	580	EB	R+	R29.40	100	80	1
31	580	EB	R+	30.16	70		

TEMPORARY WATER POLLUTION CONTROL QUANTITIES

37R	580	EB	R+	R31.38	50		
38R	580	EB	R+	R31.63	50		
39L	580	EB	L+	R31.75	70	45	
39R	580	EB	R+	R31.75		13	
42E	580	EB	R+	R34.40			1
43E	580	EB	R+	R34.82			1
45E	580	EB	R+	R35.05	50		
46E	580	EB	R+	R35.71	100	57	
49	580	EB	R+	R38.31	50	17	1
50E	580	EB	R+	R36.23	50	17	
51E	580	EB	R+	R38.92	50		
61E	580	EB	R+	R41.33		37	
62	580	EB	R+	41.67		45	
63	580	EB	R+	R41.75		13	
66E	580	EB	R+	R42.18	100	57	
67E	580	EB	R+	R42.67	70		
69	580	EB	R+	42.23	63	45	1
72	580	EB	R+	44.28			1
75	580	EB	R+	44.81	30	22	1
78	580	EB	R+	45.03	30	16	
80L	580	EB	R+	45.37	30	30	
82L	580	EB	L+	45.48		13	
85L	580	EB	L+	45.94		16	
144	680	NB	R+	M3.35	50		1
145	680	NB	R+	M6.05	70	58	
153L	680	NB	L+	19.04	80	50	
153R	680	NB	R+	19.04	80	50	
154L	680	NB	L+	19.26	90		
154R	680	NB	R+	19.37	80		
155L	680	NB	L+	19.32	70	82	
155R	680	NB	R+	19.32	70	82	
157	680	NB	R+	20.03		28	
158	680	NB	R+	R20.28	70		
159L	680	NB	L+	R23.32		45	
159R	680	NB	R+	R23.32	40		
137	680	SB	L+	20.36	40		
135	680	SB	R+	21.64		13	2
134L	680	SB	L+	R21.73		16	
134R	680	SB	R+	R21.73			1
TOTAL					2771	1529	25

NOTE: EXACT LOCATIONS TO BE DETERMINED BY THE ENGINEER

2 **REPLACED PER ADDENDUM No. 2 DATED AUGUST 13, 2015**

TEMPORARY WATER POLLUTION CONTROL QUANTITIES

WPCQ-1

STATE OF CALIFORNIA - DEPARTMENT OF TRANSPORTATION
Caltrans® **WATER QUALITY**

FUNCTIONAL SUPERVISOR: KAMRAN NAKHJIRI
CALCULATED-DESIGNED BY: NGOCCHAU TRAN
CHECKED BY: JIANGFAN CHEN
REVISED BY: LC
DATE REVISED: 3/24/15

LAST REVISION 08-03-15 | DATE PLOTTED => 12-AUG-2015 | TIME PLOTTED => 09:11

Dist	COUNTY	ROUTE	POST MILES TOTAL PROJECT	SHEET No.	TOTAL SHEETS
04	Ala	580, 680	Var	39	143

REGISTERED CIVIL ENGINEER 3/24/15 DATE

3-30-15
PLANS APPROVAL DATE

REGISTERED PROFESSIONAL ENGINEER Ber-lin Wei No. 49855 Exp. 9-30-16 CIVIL STATE OF CALIFORNIA

THE STATE OF CALIFORNIA OR ITS OFFICERS OR AGENTS SHALL NOT BE RESPONSIBLE FOR THE ACCURACY OR COMPLETENESS OF SCANNED COPIES OF THIS PLAN SHEET.

ROADWAY QUANTITIES

PROJECT WORK LOCATIONS															
LOCATION No.	ROUTE	SHOULDER	POST MILE	DIRECTION	DESCRIPTION	MIDWEST GUARDRAIL SYSTEM STANDARD PLAN LAYOUT	REMOVE AC DIKE	REMOVE GUARDRAIL	REMOVE MARKER (N)	HMA (TYPE A)	PLACE HMA DIKE (TYPE C)	PLACE HMA DIKE (TYPE F)	OBJECT MARKER (TYPE L-1)	TREATED WOOD WASTE	MINOR CONCRETE (MISCELLANEOUS CONSTRUCTION)
							LF		EA	TON	LF		EA	LB	CY
13	580	R+	19.62	WB	OFF-RAMP TO DOUGHERTY Rd/HOPYARD Rd		53.1	56.625	1	0.66		53.1		685.7	0.08
28	580	R+	R28.57	WB	MAINLINE - CROW Cr (Br 33-0232R)	12D		53.125	2					628.6	
32R	580	R+	30.35	WB	MAINLINE - STROBRIDGE Ave UC (Br 33-0189R)	12B		122.250	2				1	1314.3	0.08
32L	580	L+	30.35	WB	MAINLINE - STROBRIDGE Ave UC (Br 33-0189R)	12D		56.625	2					685.7	0.08
34	580	R+	R30.55	WB	MAINLINE - CASTRO VALLEY Blvd UC (Br 33-0202R)	12B		100.000	2				1	1142.9	0.08
36	580	R+	R31.34	WB	MAINLINE - 167TH Ave UC (Br 33-0396R)	12B		75.000	2				1	914.3	0.08
40	580	R+	R32.72	WB	MAINLINE - PLAZA DRIVE OC FAIRMONT Dr OC(Br 33-0337)	12C	53.1	60.125	2	0.66		53.1	1	685.7	0.15
41W	580	R+	R33.94	WB	MAINLINE - GRAND Ave OC (Br 33-0330)	12C		62.500	2				1	800.0	0.39
42W	580	R+	R34.40	WB	MAINLINE - JOAQUIN Ave UC (Br 33-0331)	12B		56.625	2					400.0	0.08
45W	580	R+	R35.05	WB	MAINLINE - FOOTHILL Blvd UC (Br 33-0335)	12A		56.625	2				2	685.7	0.08
46W	580	R+	R35.71	WB	MAINLINE - 106TH Ave UC (Br 33-0355)	12B		62.500	2				1	800.0	0.08
47	580	R+	R36.34	WB	MAINLINE - GOLF LINKS Rd UC (Br 33-0354)	12B		62.500	2				1	800.0	0.08
50W	580	R+	R38.31	WB	MAINLINE - EDWARDS Ave UC (Br 33-0341)	12B		62.500	2				1	800.0	0.08
51W	580	R+	R38.92	WB	MAINLINE - KUHNLE Ave UC (Br 33-0342)	12B	25.0	62.500	2	0.31		25.0	1	800.0	0.17
52	580	R+	R39.37	WB	MAINLINE - DAVENPORT Ave UC (Br 33-0343)	12B		124.083	2				1	1314.3	0.12
54	580	R+	39.45	WB	ON-RAMP FROM MOUNTAIN Blvd/ROUTE 13	12C		50.000	2				1	800.0	0.11
55	580	R+	R39.77	WB	MAINLINE - MacARTHUR Blvd UC (Br 33-0316)	12B		75.000	1				1	914.3	0.23
57	580	R+	R39.93	WB	MAINLINE - BIRDSALL Ave POC (Br 33-0328)	12C		62.500	2				1	800.0	0.11
59W	580	R+	R40.08	WB	MAINLINE - HIGH St UC (Br 33-0318)	12B		62.500	2				1	800.0	0.10
60	580	R+	R40.93	WB	MAINLINE - MAPLE Ave UC (Br 33-0321)	12B		58.458	1				1	400.0	0.12
61W	580	R+	R41.33	WB	MAINLINE - BOSTON Ave OC (Br 33-0323)	12B	87.5	50.000	2	0.70	62.5	25.0	1	800.0	0.14
64R	580	R+	42.07	WB	OFF-RAMP TO BEAUMONT Ave/BRUCE St	12B		62.500	2				1	800.0	0.08
64L	580	L+	42.07	WB	OFF-RAMP TO BEAUMONT Ave/BRUCE St	15A		18.750	2					400.0	0.12
65W	580	R+	R42.07	WB	MAINLINE - 14TH Ave UC (Br 33-0309R)	15A		25.000	2					400.0	0.22
66W	580	R+	R42.18	WB	MAINLINE - BEAUMONT Ave UC (Br 33-0310R)	12B		62.500	2				1	800.0	0.23
67W	580	R+	42.67	WB	MAINLINE - PARK Blvd UC (Br 33-0315R)	12B		62.500	2				1	800.0	0.08
68	580	R+	42.89	WB	ON-RAMP FROM PARK Blvd	12B		62.500	1				1	800.0	0.19
70	580	R+	43.48	WB	MAINLINE - LAKESHORE Ave UC (Br 33-0131)	12B		56.625	2				1	400.0	0.08
71	580	R+	44.08	WB	OFF-RAMP TO SANTA CLARA Ave/OAKLAND Ave	12B	62.5	125.000	2	0.39	62.5		1	1371.4	0.12
73	580	R+	44.51	WB	MAINLINE - BROADWAY RICHMOND Blvd UC (Br 33-0285)	12B		125.000	2				1	1371.4	0.12
74R	580	R+	44.86	WB	OFF-RAMP TO WB ROUTE 24	12D		56.625	1					685.7	0.08
74L	580	L+	44.86	WB	OFF-RAMP TO WB ROUTE 24			50.000	1					628.6	0.08
77R	580	R+	45.05	WB	OFF-RAMP TO EB ROUTE 24		109.4	81.250	2	1.19	28.1	81.3		914.3	0.08
SHEET SUBTOTAL							390.6	2220.291	60	3.91	153.1	237.5	~~21~~ 23	26342.9	3.92
									2				2		2

2 REPLACED PER ADDENDUM No. 2 DATED AUGUST 13, 2015

SUMMARY OF QUANTITIES

Q-1

STATE OF CALIFORNIA - DEPARTMENT OF TRANSPORTATION
Caltrans
DESIGN

FUNCTIONAL SUPERVISOR: GEORGE LO
CALCULATED-DESIGNED BY: HUNG C. HSU
CHECKED BY: BER-LIN WEI
REVISED BY: LC
DATE REVISED: 3/24/15

LAST REVISION 03-30-15
DATE PLOTTED => 12-AUG-2015
TIME PLOTTED => 09:11

Dist	COUNTY	ROUTE	POST MILES TOTAL PROJECT	SHEET No.	TOTAL SHEETS
04	Ala	580, 680	Var	40	143

REGISTERED CIVIL ENGINEER 3/24/15 DATE

3-30-15
PLANS APPROVAL DATE

REGISTERED PROFESSIONAL ENGINEER Ber-lin Wei No. 49855 Exp. 9-30-16 CIVIL STATE OF CALIFORNIA

THE STATE OF CALIFORNIA OR ITS OFFICERS OR AGENTS SHALL NOT BE RESPONSIBLE FOR THE ACCURACY OR COMPLETENESS OF SCANNED COPIES OF THIS PLAN SHEET.

2

ROADWAY QUANTITIES

PROJECT WORK LOCATIONS																	
LOCATION No.	ROUTE	SHOULDER	POST MILE	DIRECTION	DESCRIPTION	MIDWEST GUARDRAIL SYSTEM STANDARD PLAN LAYOUT	OBJECT MARKER (TYPE P)	OBJECT MARKER (TYPE R)	GUARD RAILING DELINEATOR TYPE F	GUARD RAILING DELINEATOR TYPE G	MGS (WOOD POST)	TRANSITION RAILING (WB-31)	ALTERNATIVE FLARED TERMINAL SYSTEM	ALTERNATIVE IN-LINE TERMINAL SYSTEM	CRASH CUSHION (TYPE CAT)		REMOVE FLARED END SECTION
							EA				LF	EA					
13	580	R+	19.62	WB	OFF-RAMP TO DOUGHERTY Rd/HOPYARD Rd		2 ~~1~~		2		28.125	1					
28	580	R+	R28.57	WB	MAINLINE - CROW Cr (Br 33-0232R)	12D	1		2		28.125	1					
32R	580	R+	30.35	WB	MAINLINE - STROBRIDGE Ave UC (Br 33-0189R)	12B	2 ~~1~~		4		56.250	1	1				1
32L	580	L+	30.35	WB	MAINLINE - STROBRIDGE Ave UC (Br 33-0189R)	12D	2 ~~1~~			2	28.125	1					
34	580	R+	R30.55	WB	MAINLINE - CASTRO VALLEY Blvd UC (Br 33-0202R)	12B	2 ~~1~~		3		37.500	1	1				1
36	580	R+	R31.34	WB	MAINLINE - 167TH Ave UC (Br 33-0396R)	12B	2 ~~1~~		2		12.500	1	1				1
40	580	R+	R32.72	WB	MAINLINE - PLAZA DRIVE OC FAIRMONT Dr OC(Br 33-0337)	12C	2 ~~1~~		2		28.125	1					
41W	580	R+	R33.94	WB	MAINLINE - GRAND Ave OC (Br 33-0330)	12C	2 ~~1~~		3		37.500	1					
42W	580	R+	R34.40	WB	MAINLINE - JOAQUIN Ave UC (Br 33-0331)	12B	2 ~~1~~		2		28.125	1					
45W	580	R+	R35.05	WB	MAINLINE - FOOTHILL Blvd UC (Br 33-0335)	12A	2 ~~1~~		2		28.125	1					
46W	580	R+	R35.71	WB	MAINLINE - 106TH Ave UC (Br 33-0355)	12B	2 ~~1~~		2			1	1				
47	580	R+	R36.34	WB	MAINLINE - GOLF LINKS Rd UC (Br 33-0354)	12B	2 ~~1~~		2			1	1				
50W	580	R+	R38.31	WB	MAINLINE - EDWARDS Ave UC (Br 33-0341)	12B	2 ~~1~~		2			1	1				
51W	580	R+	R38.92	WB	MAINLINE - KUHNLE Ave UC (Br 33-0342)	12B	2 ~~1~~		2			1	1				
52	580	R+	R39.37	WB	MAINLINE - DAVENPORT Ave UC (Br 33-0343)	12B	2 ~~1~~		4		56.250	1	1				1
54	580	R+	39.45	WB	ON-RAMP FROM MOUNTAIN Blvd/ROUTE 13	12C	2 ~~1~~		2		37.500	1					1
55	580	R+	R39.77	WB	MAINLINE - MacARTHUR Blvd UC (Br 33-0316)	12B	2 ~~1~~		3		12.500	1	1				1
57	580	R+	R39.93	WB	MAINLINE - BIRDSALL Ave POC (Br 33-0328)	12C	2 ~~1~~		2		37.500	1					1
59W	580	R+	R40.08	WB	MAINLINE - HIGH St UC (Br 33-0318)	12B	2 ~~1~~		2			1	1				1
60	580	R+	R40.93	WB	MAINLINE - MAPLE Ave UC (Br 33-0321)	12B	2 ~~1~~		2		28.125	1	1				1
61W	580	R+	R41.33	WB	MAINLINE - BOSTON Ave OC (Br 33-0323)	12B	2 ~~1~~		2			1	1				1
64R	580	R+	42.07	WB	OFF-RAMP TO BEAUMONT Ave/BRUCE St	12B	2 ~~1~~		2			1	1				1
64L	580	L+	42.07	WB	OFF-RAMP TO BEAUMONT Ave/BRUCE St	15A	2 ~~1~~	1		4 ~~3~~	75.000 ~~37.500~~	1			1		
65W	580	R+	R42.07	WB	MAINLINE - 14TH Ave UC (Br 33-0309R)	15A	2 ~~1~~		4		~~40.625~~	1					
66W	580	R+	R42.18	WB	MAINLINE - BEAUMONT Ave UC (Br 33-0310R)	12B	2 ~~1~~		2		75.000	1	1				1
67W	580	R+	42.67	WB	MAINLINE - PARK Blvd UC (Br 33-0315R)	12B	2 ~~1~~			2		1	1				1
68	580	R+	42.89	WB	ON-RAMP FROM PARK Blvd	12B	2 ~~1~~		2			1	1				1
70	580	R+	43.48	WB	MAINLINE - LAKESHORE Ave UC (Br 33-0131)	12B	2 ~~1~~		2		28.125	1	1				1
71	580	R+	44.08	WB	OFF-RAMP TO SANTA CLARA Ave/OAKLAND Ave	12B	2 ~~1~~		4		62.500	1	1				1
73	580	R+	44.51	WB	MAINLINE - BROADWAY RICHMOND Blvd UC (Br 33-0285)	12B	2 ~~1~~			4	62.500	1	1				1
74R	580	R+	44.86	WB	OFF-RAMP TO WB ROUTE 24	12D	2 ~~1~~		2		28.125	1					
74L	580	L+	44.86	WB	OFF-RAMP TO WB ROUTE 24		2 ~~1~~	1		2	25.000	1					
77R	580	R+	45.05	WB	OFF-RAMP TO EB ROUTE 24		2 ~~1~~		3		56.250	1					
SHEET SUBTOTAL							65 ~~33~~	2	68	14 ~~13~~	~~825.000~~ 896.875	33	19		1		21

2 **REPLACED PER ADDENDUM No. 2 DATED AUGUST 13, 2015**

SUMMARY OF QUANTITIES

Q-2

STATE OF CALIFORNIA - DEPARTMENT OF TRANSPORTATION
Caltrans® DESIGN

FUNCTIONAL SUPERVISOR: GEORGE LO
CALCULATED-DESIGNED BY: HUNG C. HSU
CHECKED BY: BER-LIN WEI
REVISED BY: LC
DATE REVISED: 3/24/15

LAST REVISION 03-30-15 | DATE PLOTTED => 12-AUG-2015 | TIME PLOTTED => 09:11

Dist	COUNTY	ROUTE	POST MILES TOTAL PROJECT	SHEET No.	TOTAL SHEETS
04	Ala	580, 680	Var	41	143

REGISTERED CIVIL ENGINEER 3/24/15 DATE

3-30-15
PLANS APPROVAL DATE

REGISTERED PROFESSIONAL ENGINEER Ber-lin Wei No. 49855 Exp. 9-30-16 CIVIL STATE OF CALIFORNIA

THE STATE OF CALIFORNIA OR ITS OFFICERS OR AGENTS SHALL NOT BE RESPONSIBLE FOR THE ACCURACY OR COMPLETENESS OF SCANNED COPIES OF THIS PLAN SHEET.

2

ROADWAY QUANTITIES

PROJECT WORK LOCATIONS													
LOCATION No.	ROUTE	SHOULDER	POST MILE	DIRECTION	DESCRIPTION	MIDWEST GUARDRAIL SYSTEM STANDARD PLAN LAYOUT	RESET ROADSIDE SIGN (ONE POST)	VEGETATION CONTROL (MINOR CONCRETE)	TEMPORARY RAILING (TYPE K)	TEMPORARY CRASH CUSHION MODULE	TEMPORARY ALTERNATIVE CRASH CUSHION	CHANNELIZER (SURFACE MOUNTED)	REFERENCES
							EA	SQYD	LF	EA	EA		
13	580	R+	19.62	WB	OFF-RAMP TO DOUGHERTY Rd/HOPYARD Rd			42.9	40	~~14~~	1	10	SHEET C-9 AND STRUCTURE SHEET 14 & 31
28	580	R+	R28.57	WB	MAINLINE - CROW Cr (Br 33-0232R)	12D	1	46.9					SEE DETAIL, SHEET C-22
32R	580	R+	30.35	WB	MAINLINE - STROBRIDGE Ave UC (Br 33-0189R)	12B		79.8	60 ~~40~~	14		10	SHEET C-10 AND STRUCTURE SHEET 14 & 31
32L	580	L+	30.35	WB	MAINLINE - STROBRIDGE Ave UC (Br 33-0189R)	12D		46.9	40	~~14~~	1	10	SHEET C-5 AND STRUCTURE SHEET 14 & 31
34	580	R+	R30.55	WB	MAINLINE - CASTRO VALLEY Blvd UC (Br 33-0202R)	12B		68.4	60 ~~40~~	14		10	SHEET C-18 AND STRUCTURE SHEET 14 & 31
36	580	R+	R31.34	WB	MAINLINE - 167TH Ave UC (Br 33-0396R)	12B		57.0	60 ~~40~~	14		10	SHEET C-18 AND STRUCTURE SHEET 2 & 27
40	580	R+	R32.72	WB	MAINLINE - PLAZA DRIVE OC FAIRMONT Dr OC (Br 33-0337)	12C		42.9	100 ~~40~~	14		10	SHEET C-9 AND STRUCTURE SHEET 21 & 30
41W	580	R+	R33.94	WB	MAINLINE - GRAND Ave OC (Br 33-0330)	12C		55.1 ~~57.3~~	120 ~~60~~	14		10	SHEET C-11 AND STRUCTURE SHEET 26 & 30
42W	580	R+	R34.40	WB	MAINLINE - JOAQUIN Ave UC (Br 33-0331)	12B		46.9	80 ~~40~~	14		10	SHEET C-17 AND STRUCTURE SHEET 3 & 28
45W	580	R+	R35.05	WB	MAINLINE - FOOTHILL Blvd UC (Br 33-0335)	12A		46.9	80 ~~40~~	14		10	SHEET C-17 AND STRUCTURE SHEET 3 & 28
46W	580	R+	R35.71	WB	MAINLINE - 106TH Ave UC (Br 33-0355)	12B		51.3	80 ~~40~~	14		10	SHEET C-2 AND STRUCTURE SHEET 3 & 28
47	580	R+	R36.34	WB	MAINLINE - GOLF LINKS Rd UC (Br 33-0354)	12B		51.3	80 ~~40~~	14		10	SHEET C-2 AND STRUCTURE SHEET 3 & 28
50W	580	R+	R38.31	WB	MAINLINE - EDWARDS Ave UC (Br 33-0341)	12B		57.3	80 ~~40~~	14		10	SHEET C-1 AND STRUCTURE SHEET 3 & 28
51W	580	R+	R38.92	WB	MAINLINE - KUHNLE Ave UC (Br 33-0342)	12B		51.3	40	~~14~~	1	10	SHEET C-14 AND STRUCTURE SHEET 7 & 28
52	580	R+	R39.37	WB	MAINLINE - DAVENPORT Ave UC (Br 33-0343)	12B		90.4	40	~~14~~	1	10	SHEET C-3 AND STRUCTURE SHEET 11 & 29
54	580	R+	39.45	WB	ON-RAMP FROM MOUNTAIN Blvd/ROUTE 13	12C		55.1 ~~57.3~~	80 ~~40~~	14		10	SHEET C-11 AND STRUCTURE SHEET 21 & 30
55	580	R+	R39.77	WB	MAINLINE - MacARTHUR Blvd UC (Br 33-0316)	12B		57.0	80 ~~40~~	14		10	SHEET C-19 AND STRUCTURE SHEET 7 & 28
57	580	R+	R39.93	WB	MAINLINE - BIRDSALL Ave POC (Br 33-0328)	12C	1	57.3	40	~~14~~	1	10	SHEET C-11 AND STRUCTURE SHEET 21 & 30
59W	580	R+	R40.08	WB	MAINLINE - HIGH St UC (Br 33-0318)	12B		51.3	80 ~~40~~	14		10	SHEET C-2 AND STRUCTURE SHEET 5 & 28
60	580	R+	R40.93	WB	MAINLINE - MAPLE Ave UC (Br 33-0321)	12B		88.2	40	~~14~~	1	10	SHEET C-17 AND STRUCTURE SHEET 11 & 29
61W	580	R+	R41.33	WB	MAINLINE - BOSTON Ave OC (Br 33-0323)	12B		51.3	80 ~~40~~	14		10	SHEET C-16 AND STRUCTURE SHEET 21 & 30
64R	580	R+	42.07	WB	OFF-RAMP TO BEAUMONT Ave/BRUCE St	12B		57.3	60 ~~40~~	14		10	SHEET C-1 AND STRUCTURE SHEET 3 & 28
64L	580	L+	42.07	WB	OFF-RAMP TO BEAUMONT Ave/BRUCE St	15A		81.8 ~~27.0~~	80 ~~40~~	~~14~~	1	10	SHEET C-21 AND STRUCTURE SHEET 12 & 29
65W	580	R+	R42.07	WB	MAINLINE - 14TH Ave UC (Br 33-0309R)	15A	1	81.8 ~~32.5~~	80 ~~40~~	~~14~~	1	10	SHEET C-21 AND STRUCTURE SHEET 6 & 28
66W	580	R+	R42.18	WB	MAINLINE - BEAUMONT Ave UC (Br 33-0310R)	12B		51.3	80 ~~40~~	14		10	SHEET C-2 AND STRUCTURE SHEET 6 & 28
67W	580	R+	42.67	WB	MAINLINE - PARK Blvd UC (Br 33-0315R)	12B		51.3	80 ~~40~~	14		10	SHEET C-2 AND STRUCTURE SHEET 3 & 28
68	580	R+	42.89	WB	ON-RAMP FROM PARK Blvd	12B		57.3	60 ~~40~~	14		10	SHEET C-1 AND STRUCTURE SHEET 16 & 31
70	580	R+	43.48	WB	MAINLINE - LAKESHORE Ave UC (Br 33-0131)	12B		42.9	80 ~~40~~	14		10	SHEET C-8 AND STRUCTURE SHEET 2 & 27
71	580	R+	44.08	WB	OFF-RAMP TO SANTA CLARA Ave/OAKLAND Ave	12B		82.7	60 ~~40~~	14		10	SHEET C-10 AND STRUCTURE SHEET 18 & 31
73	580	R+	44.51	WB	MAINLINE - BROADWAY RICHMOND Blvd UC (Br 33-0285)	12B		93.7	40	~~14~~	1	10	SHEET C-3 AND STRUCTURE SHEET 11 & 29
74R	580	R+	44.86	WB	OFF-RAMP TO WB ROUTE 24	12D		46.9	40	~~14~~	1	10	SHEET C-4 AND STRUCTURE SHEET 2 & 27
74L	580	L+	44.86	WB	OFF-RAMP TO WB ROUTE 24			29.9 ~~40.4~~	40	~~14~~	1	10	SHEET C-7 AND STRUCTURE SHEET 2 & 27
77R	580	R+	45.05	WB	OFF-RAMP TO EB ROUTE 24			53.1 ~~65.6~~	60 ~~40~~	~~14~~	1	10	SHEET C-7 AND STRUCTURE SHEET 2 & 27
SHEET SUBTOTAL							3	~~2048.8~~ 1925.5	~~1300~~ 2120	~~448~~ 280	12	320	

2 **REPLACED PER ADDENDUM No. 2 DATED AUGUST 13, 2015**

SUMMARY OF QUANTITIES

Q-3

STATE OF CALIFORNIA - DEPARTMENT OF TRANSPORTATION
Caltrans® DESIGN

FUNCTIONAL SUPERVISOR: GEORGE LO
CALCULATED-DESIGNED BY: HUNG C. HSU
CHECKED BY: BER-LIN WEI
REVISED BY: LC
DATE REVISED: 3/24/15

LAST REVISION: DATE PLOTTED => 12-AUG-2015 TIME PLOTTED => 09:11
03-30-15

DIST	COUNTY	ROUTE	POST MILES TOTAL PROJECT	SHEET No.	TOTAL SHEETS
04	Ala	580, 680	Var	42	143

REGISTERED CIVIL ENGINEER 3/24/15 DATE

3-30-15
PLANS APPROVAL DATE

REGISTERED PROFESSIONAL ENGINEER Ber-lin Wei No. 49855 Exp. 9-30-16 CIVIL STATE OF CALIFORNIA

THE STATE OF CALIFORNIA OR ITS OFFICERS OR AGENTS SHALL NOT BE RESPONSIBLE FOR THE ACCURACY OR COMPLETENESS OF SCANNED COPIES OF THIS PLAN SHEET.

2

ROADWAY QUANTITIES

PROJECT WORK LOCATIONS															
LOCATION No.	ROUTE	SHOULDER	POST MILE	DIRECTION	DESCRIPTION	MIDWEST GUARDRAIL SYSTEM STANDARD PLAN LAYOUT	REMOVE AC DIKE	REMOVE GUARDRAIL	REMOVE MARKER (N)	HMA (TYPE A)	PLACE HMA DIKE (TYPE C)	PLACE HMA DIKE (TYPE F)	OBJECT MARKER (TYPE L-1)	TREATED WOOD WASTE	MINOR CONCRETE (MISCELLANEOUS CONSTRUCTION)
							LF		EA	TON	LF		EA	LB	CY
77L	580	L+	45.05	WB	OFF-RAMP TO EB ROUTE 24			55.875 ~~62.125~~	2					628.6 ~~685.7~~	0.08
81W	580	R+	45.25	WB	MAINLINE - WEST St UC (MARTIN LUTHER KING JR WAY UC/Br 33-0299)		41.0	62.875 ~~69.125~~	2	0.41	16.0	25.0		742.9 ~~800.0~~	0.19
83	580	R+	45.57	WB	ON-RAMP FROM WB ROUTE 24/52ND St			55.875 ~~62.125~~	1					628.6 ~~685.7~~	0.08
84	580	R+	45.74	WB	MAINLINE - ADELINE St UC (Br 33-0280)	12A	53.1	56.625	2	0.66		53.1	1	685.7	0.08
86L	580	L+	46.01	WB	MAINLINE - MacARTHUR Blvd UC (Br 33-0281R)	12B	62.5	50.000	2	0.39	62.5		1	800.0	0.08
85L	580	L+	45.94	EB	MAINLINE - ADELINE St UC (Br 33-0280)			56.625	1					685.7	0.08
82L	580	L+	45.48	EB	OFF-RAMP TO ROUTE EB 24			56.625						685.7	0.08
80L	580	L+	45.37	EB	OFF-RAMP TO WB ROUTE 980/27TH St			56.625						685.7	0.08
79	580	R+	45.25	EB	MAINLINE - GROVE St UC (Br 33-0299)	12D		56.625	1					685.7	0.08
78	580	R+	45.03	EB	OFF-RAMP TO BROADWAY/WEBSTER St	12D		58.458	2					685.7	0.12
76	580	R+	45.03	EB	MAINLINE - TELEGRAPH Ave UC (Br 33-0297)	12D		56.625	1					685.7	0.08
75	580	R+	44.81	EB	MAINLINE - WEBSTER St UC (Br 33-0296)	12B	87.5	50.000	2	0.70	62.5	25.0	1	800.0	0.08
72	580	R+	44.28	EB	MAINLINE - OAKLAND Ave UC (Br 33-0288)	12B		62.500	2				1	800.0	0.08
67E	580	R+	42.67	EB	MAINLINE - PARK Blvd UC (Br 33-0315)	12B	25.0	62.500	1	0.31		25.0	1	800.0	0.08
66E	580	R+	R42.18	EB	MAINLINE - BEAUMONT Ave UC (Br 33-0310)	12B		122.250	2				1	1314.3	0.08
65E	580	R+	R42.07	EB	MAINLINE - 14TH Ave UC (Br 33-0309L)	12D		56.625	1					685.7	0.08
63	580	R+	R41.75	EB	MAINLINE - SHEFFIELD Ave OC (Br 33-0325)	12C	53.1	62.425	2	0.66		53.1	1	685.7	0.19
62	580	R+	41.67	EB	OFF-RAMP TO FRUITVALE Ave	12B		50.000					1	800.0	0.12
61E	580	R+	R41.33	EB	MAINLINE - BOSTON Ave OC (Br 33-0323)	12B	112.5	115.250	2	0.86	87.5	25.0	1	1257.1	1.32
59E	580	R+	R40.08	EB	MAINLINE - HIGH St UC (Br 33-0318)	12B		62.500	1				1	800.0	0.10
58	580	R+	39.95	EB	OFF-RAMP TO SB MacARTHUR Blvd	12B		62.500	1				1	800.0	0.14
56	580	R+	39.85	EB	MAINLINE - ON-RAMP FROM SB MacARTHUR Blvd	12B		59.458	2				1	685.7	0.14
51E	580	R+	R38.92	EB	MAINLINE - KUHNLE Ave UC (Br 33-0342)	12B		62.500	1				1	800.0	0.08
50E	580	R+	R38.31	EB	MAINLINE - EDWARDS Ave UC (Br 33-0341)	12B		62.500	2				1	800.0	0.08
48	580	R+	R36.38	EB	MAINLINE - GOLF LINKS Rd UC (Br 33-0354)	15A		56.625	1					685.7	0.08
46E	580	R+	R35.71	EB	MAINLINE - 106TH Ave UC (Br 33-0355)	12B		122.250	2				1	1314.3	0.08
45E	580	R+	R35.05	EB	MAINLINE - FOOTHILL Blvd UC (Br 33-0335)	12B	37.5	75.000	1	0.47		37.5	1	914.3	0.08
44R	580	R+	R34.88	EB	ON-RAMP FROM SB FOOTHILL Blvd (Br 33-0334K)	12B		62.500	2				1	800	0.08
44L	580	L+	R34.88	EB	ON-RAMP FROM SB FOOTHILL Blvd (Br 33-0334K)	12B		62.500	1				1	800	0.12
43E	580	R+	R34.82	EB	MAINLINE - DUTTON Ave UC (Br 33-0333)	12D		58.458	2					685.7	0.12
42E	580	R+	R34.40	EB	MAINLINE - JOAQUIN Ave UC (Br 33-0331)	12D		77.875	2					857.1	0.48
SHEET SUBTOTAL							472.2	~~2047.800~~ 2029.050	44	4.48	228.5	243.7	~~17~~ 18	~~24856.9~~ 24685.6	4.64

2 **REPLACED PER ADDENDUM No. 2 DATED AUGUST 13, 2015**

SUMMARY OF QUANTITIES

Q-4

STATE OF CALIFORNIA - DEPARTMENT OF TRANSPORTATION
Caltrans® DESIGN

FUNCTIONAL SUPERVISOR: GEORGE LO
CALCULATED-DESIGNED BY: HUNG C. HSU
CHECKED BY: BER-LIN WEI
REVISED BY: LC
DATE REVISED: 3/24/15

LAST REVISION 03-30-15
DATE PLOTTED => 12-AUG-2015
TIME PLOTTED => 09:11

DIST	COUNTY	ROUTE	POST MILES TOTAL PROJECT	SHEET No.	TOTAL SHEETS
04	Ala	580, 680	Var	43	143

REGISTERED CIVIL ENGINEER 3/24/15 DATE

3-30-15
PLANS APPROVAL DATE

REGISTERED PROFESSIONAL ENGINEER Ber-lin Wei No. 49855 Exp. 9-30-16 CIVIL STATE OF CALIFORNIA

THE STATE OF CALIFORNIA OR ITS OFFICERS OR AGENTS SHALL NOT BE RESPONSIBLE FOR THE ACCURACY OR COMPLETENESS OF SCANNED COPIES OF THIS PLAN SHEET.

2

ROADWAY QUANTITIES

PROJECT WORK LOCATIONS																
LOCATION No.	ROUTE	SHOULDER	POST MILE	DIRECTION	DESCRIPTION	MIDWEST GUARDRAIL SYSTEM STANDARD PLAN LAYOUT	OBJECT MARKER (TYPE P)	OBJECT MARKER (TYPE R)	GUARD RAILING DELINEATOR TYPE F	GUARD RAILING DELINEATOR TYPE G	MGS (WOOD POST)	TRANSITION RAILING (WB-31)	ALTERNATIVE FLARED TERMINAL SYSTEM	ALTERNATIVE IN-LINE TERMINAL SYSTEM	CRASH CUSHION (TYPE CAT)	REMOVE FLARED END SECTION
							EA				LF	EA				
77L	580	Lt	45.05	WB	OFF-RAMP TO EB ROUTE 24		2 ~~1~~	1		3 ~~2~~	53.125 ~~40.500~~	1				
81W	580	Rt	45.25	WB	MAINLINE - WEST St UC (MARTIN LUTHER KING JR WAY UC/Br 33-0299)		2 ~~1~~		3		53.125	1				
83	580	Rt	45.57	WB	ON-RAMP FROM WB ROUTE 24/52ND St		2 ~~1~~	1	3 ~~2~~		53.125 ~~40.500~~	1				
84	580	Rt	45.74	WB	MAINLINE - ADELINE St UC (Br 33-0280)	12A	2 ~~1~~		2		28.125	1		1		
86L	580	Lt	46.01	WB	MAINLINE - MacARTHUR Blvd UC (Br 33-0281R)	12B	2 ~~1~~			2		1	1			1
85L	580	Lt	45.94	EB	MAINLINE - ADELINE St UC (Br 33-0280)		2 ~~1~~			2	28.125	1				
82L	580	Lt	45.48	EB	OFF-RAMP TO EB ROUTE 24		2 ~~1~~	1		2	28.125 ~~28.000~~	1				
80L	580	Lt	45.37	EB	OFF-RAMP TO WB ROUTE 980/27TH St		2 ~~1~~	1		2	28.125 ~~28.000~~	1				
79	580	Rt	45.25	EB	MAINLINE - GROVE St UC (Br 33-0299)	12D	2 ~~1~~		2		28.125	1				
78	580	Rt	45.03	EB	OFF-RAMP TO BROADWAY/WEBSTER St	12D	2 ~~1~~		2		28.125	1				
76	580	Rt	45.03	EB	MAINLINE - TELEGRAPH Ave UC (Br 33-0297)	12D	2 ~~1~~		2		28.125	1				
75	580	Rt	44.81	EB	MAINLINE - WEBSTER St UC (Br 33-0296)	12B	2 ~~1~~		2			1	1			1
72	580	Rt	44.28	EB	MAINLINE - OAKLAND Ave UC (Br 33-0288)	12B	2 ~~1~~		2			1	1			1
67E	580	Rt	42.67	EB	MAINLINE - PARK Blvd UC (Br 33-0315)	12B	2 ~~1~~		2			1	1			1
66E	580	Rt	R42.18	EB	MAINLINE - BEAUMONT Ave UC (Br 33-0310)	12B	2 ~~1~~		4		56.250	1	1			1
65E	580	Rt	R42.07	EB	MAINLINE - 14TH Ave UC (Br 33-0309L)	12D	2 ~~1~~		2		28.125	1				
63	580	Rt	R41.75	EB	MAINLINE - SHEFFIELD Ave OC (Br 33-0325)	12C	2 ~~1~~		2		28.125	1				
62	580	Rt	41.67	EB	OFF-RAMP TO FRUITVALE Ave	12B	2 ~~1~~		2			1	1			1
61E	580	Rt	R41.33	EB	MAINLINE - BOSTON Ave OC (Br 33-0323)	12B	2 ~~1~~		4			1	1			1
59E	580	Rt	R40.08	EB	MAINLINE - HIGH St UC (Br 33-0318)	12B	2 ~~1~~		2			1	1			1
58	580	Rt	39.95	EB	OFF-RAMP TO SB MacARTHUR Blvd	12B	2 ~~1~~		2			1	1			1
56	580	Rt	39.85	EB	MAINLINE - ON-RAMP FROM SB MacARTHUR Blvd	12B	2 ~~1~~		2		28.125	1	1			1
51E	580	Rt	R38.92	EB	MAINLINE - KUHNLE Ave UC (Br 33-0342)	12B	2 ~~1~~		2			1	1			1
50E	580	Rt	R38.31	EB	MAINLINE - EDWARDS Ave UC (Br 33-0341)	12B	2 ~~1~~		2			1	1			1
48	580	Rt	R36.38	EB	MAINLINE - GOLF LINKS Rd UC (Br 33-0354)	15A	2 ~~1~~	1	2		28.125	1	1			1
46E	580	Rt	R35.71	EB	MAINLINE - 106TH Ave UC (Br 33-0355)	12B	2 ~~1~~		4		56.250	1	1			1
45E	580	Rt	R35.05	EB	MAINLINE - FOOTHILL Blvd UC (Br 33-0335)	12B	2 ~~1~~		2		12.500	1	1			1
44R	580	Rt	R34.88	EB	ON-RAMP FROM SB FOOTHILL Blvd (Br 33-0334K)	12B	2 ~~1~~		2			1	1			1
44L	580	Lt	R34.88	EB	ON-RAMP FROM SB FOOTHILL Blvd (Br 33-0334K)	12B	2 ~~1~~			2		1	1			1
43E	580	Rt	R34.82	EB	MAINLINE - DUTTON Ave UC (Br 33-0333)	12D	2 ~~1~~		2		28.125	1				
42E	580	Rt	R34.40	EB	MAINLINE - JOAQUIN Ave UC (Br 33-0331)	12D	2 ~~1~~		2		28.125	1				
					SHEET SUBTOTAL		~~31~~ 62	5	~~57~~ 58	~~12~~ 13	~~624.500~~ 650.000	31	17	1		17

2 **REPLACED PER ADDENDUM No. 2 DATED AUGUST 13, 2015**

SUMMARY OF QUANTITIES

Q-5

STATE OF CALIFORNIA - DEPARTMENT OF TRANSPORTATION
Caltrans® DESIGN
FUNCTIONAL SUPERVISOR: GEORGE LO
CALCULATED-DESIGNED BY: HUNG C. HSU
CHECKED BY: BER-LIN WEI
REVISED BY: LC
DATE REVISED: 3/24/15

LAST REVISION 03-30-15
DATE PLOTTED => 12-AUG-2015
TIME PLOTTED => 09:11

Dist	COUNTY	ROUTE	POST MILES TOTAL PROJECT	SHEET No.	TOTAL SHEETS
04	Ala	580, 680	Var	44	143

REGISTERED CIVIL ENGINEER 3/24/15 DATE

3-30-15
PLANS APPROVAL DATE

REGISTERED PROFESSIONAL ENGINEER Ber-lin Wei No. 49855 Exp. 9-30-16 CIVIL STATE OF CALIFORNIA

THE STATE OF CALIFORNIA OR ITS OFFICERS OR AGENTS SHALL NOT BE RESPONSIBLE FOR THE ACCURACY OR COMPLETENESS OF SCANNED COPIES OF THIS PLAN SHEET.

2

ROADWAY QUANTITIES

PROJECT WORK LOCATIONS													
LOCATION No.	ROUTE	SHOULDER	POST MILE	DIRECTION	DESCRIPTION	MIDWEST GUARDRAIL SYSTEM STANDARD PLAN LAYOUT	RESET ROADSIDE SIGN (ONE POST)	VEGETATION CONTROL (MINOR CONCRETE)	TEMPORARY RAILING (TYPE K)	TEMPORARY CRASH CUSHION MODULE	TEMPORARY ALTERNATIVE CRASH CUSHION	CHANNELIZER (SURFACE MOUNTED)	REFERENCES
							EA	SQYD	LF	EA			
77L	580	L+	45.05	WB	OFF-RAMP TO EB ROUTE 24			50.8 ~~30.3~~	40	~~14~~	2	10	SHEET C-7 AND STRUCTURE SHEET 2 & 27
81W	580	R+	45.25	WB	MAINLINE - WEST St UC (MARTIN LUTHER KING JR WAY UC/Br 33-0299)			50.8 ~~40.4~~	80 ~~40~~	~~14~~	2	10	SHEET C-6 AND STRUCTURE SHEET 8 & 29
83	580	R+	45.57	WB	ON-RAMP FROM WB ROUTE 24/52ND St			50.8 ~~50.2~~	40	~~14~~	2	10	SHEET C-6 AND STRUCTURE SHEET 2 & 27
84	580	R+	45.74	WB	MAINLINE - ADELINE St UC (Br 33-0280)	12A		90.9	60 ~~40~~	14		10	SHEET C-17 AND STRUCTURE SHEET 3 & 28
86L	580	L+	46.01	WB	MAINLINE - MacARTHUR Blvd UC (Br 33-0281R)	12B		51.3	40	~~14~~	1	10	SHEET C-15 AND STRUCTURE SHEET 4 & 28
85L	580	L+	45.94	EB	MAINLINE - ADELINE St UC (Br 33-0280)			46.9	40	~~14~~	1	10	SHEET C-5 AND STRUCTURE SHEET 3 & 28
82L	580	L+	45.48	EB	OFF-RAMP TO EB ROUTE 24			65.5	40	~~14~~	1	10	SHEET C-8 AND STRUCTURE SHEET 2 & 27
80L	580	L+	45.37	EB	OFF-RAMP TO WB ROUTE 980/27TH St			65.5	40	~~14~~	1	10	SHEET C-8 AND STRUCTURE SHEET 2 & 27
79	580	R+	45.25	EB	MAINLINE - GROVE St UC (Br 33-0299)	12D		42.9	60 ~~40~~	14		10	SHEET C-5 AND STRUCTURE SHEET 3 & 27
78	580	R+	45.03	EB	OFF-RAMP TO BROADWAY/WEBSTER St	12D		46.9	40	~~14~~	1	10	SHEET C-4 AND STRUCTURE SHEET 11 & 29
76	580	R+	45.03	EB	MAINLINE - TELEGRAPH Ave UC (Br 33-0297)	12D		46.9	80 ~~40~~	14		10	SHEET C-4 AND STRUCTURE SHEET 3 & 27
75	580	R+	44.81	EB	MAINLINE - WEBSTER St UC (Br 33-0296)	12B	1	51.3	40	~~14~~	1	10	SHEET C-16 AND STRUCTURE SHEET 3 & 27
72	580	R+	44.28	EB	MAINLINE - OAKLAND Ave UC (Br 33-0288)	12B		51.3	80 ~~40~~	14		10	SHEET C-2 AND STRUCTURE SHEET 3 & 27
67E	580	R+	42.67	EB	MAINLINE - PARK Blvd UC (Br 33-0315)	12B		51.3	80 ~~40~~	14		10	SHEET C-14 AND STRUCTURE SHEET 3 & 27
66E	580	R+	R42.18	EB	MAINLINE - BEAUMONT Ave UC (Br 33-0310)	12B		90.4	80 ~~40~~	14		10	SHEET C-3 AND STRUCTURE SHEET 3 & 27
65E	580	R+	R42.07	EB	MAINLINE - 14TH Ave UC (Br 33-0309L)	12D		46.9	80 ~~40~~	14		10	SHEET C-4 AND STRUCTURE SHEET 3 & 27
63	580	R+	R41.75	EB	MAINLINE - SHEFFIELD Ave OC (Br 33-0325)	12C		42.9	40	~~14~~	1	10	SHEET C-20 AND STRUCTURE SHEET 24 & 30
62	580	R+	41.67	EB	OFF-RAMP TO FRUITVALE Ave	12B		57.3	40	~~14~~	1	10	SHEET C-12 AND STRUCTURE SHEET 21 & 30
61E	580	R+	R41.33	EB	MAINLINE - BOSTON Ave OC (Br 33-0323)	12B		62.7	140 ~~100~~	14		10	SHEET C-20 AND STRUCTURE SHEETS 22, 23 & 30
59E	580	R+	R40.08	EB	MAINLINE - HIGH St UC (Br 33-0318)	12B		51.3	60 ~~40~~	14		10	SHEET C-2 AND STRUCTURE SHEET 5 & 28
58	580	R+	39.95	EB	OFF-RAMP TO SB MacARTHUR Blvd	12B		57.3	40	~~14~~	1	10	SHEET C-1 AND STRUCTURE SHEET 17 & 31
56	580	R+	39.85	EB	MAINLINE - ON-RAMP FROM SB MacARTHUR Blvd	12B		46.9	40	~~14~~	1	10	SHEET C-17 AND STRUCTURE SHEET 11 & 29
51E	580	R+	R38.92	EB	MAINLINE - KUHNLE Ave UC (Br 33-0342)	12B		57.3	40	~~14~~	1	10	SHEET C-1 AND STRUCTURE SHEET 3 & 27
50E	580	R+	R38.31	EB	MAINLINE - EDWARDS Ave UC (Br 33-0341)	12B		51.3	80 ~~40~~	14		10	SHEET C-2 AND STRUCTURE SHEET 3 & 27
48	580	R+	R36.38	EB	MAINLINE - GOLF LINKS Rd UC (Br 33-0354)	15A		46.9	80 ~~40~~	14		10	SHEET C-6 AND STRUCTURE SHEET 3 & 27
46E	580	R+	R35.71	EB	MAINLINE - 106TH Ave UC (Br 33-0355)	12B		90.4	80 ~~40~~	14		10	SHEET C-3 AND STRUCTURE SHEET 3 & 27
45E	580	R+	R35.05	EB	MAINLINE - FOOTHILL Blvd UC (Br 33-0335)	12B	1	57.0	80 ~~40~~	14		10	SHEET C-19 AND STRUCTURE SHEET 3 & 27
44R	580	R+	R34.88	EB	ON-RAMP FROM SB FOOTHILL Blvd (Br 33-0334K)	12B		57.3	60 ~~40~~	14		10	SHEET C-1 AND STRUCTURE SHEET 3 & 27
44L	580	L+	R34.88	EB	ON-RAMP FROM SB FOOTHILL Blvd (Br 33-0334K)	12B		51.3	40	~~14~~	1	10	SHEET C-16 AND STRUCTURE SHEET 11 & 29
43E	580	R+	R34.82	EB	MAINLINE - DUTTON Ave UC (Br 33-0333)	12D		46.9	40	~~14~~	1	10	SHEET C-4 AND STRUCTURE SHEET 11 & 29
42E	580	R+	R34.40	EB	MAINLINE - JOAQUIN Ave UC (Br 33-0331)	12D		46.9	40 ~~60~~	14	1	10	SHEET C-4 AND STRUCTURE SHEET 13 & 29
SHEET SUBTOTAL							2	~~1692.6~~ 1724.1	~~1320~~ 1820	~~434~~ 196	20	310	

2 **REPLACED PER ADDENDUM No. 2 DATED AUGUST 13, 2015**

SUMMARY OF QUANTITIES

Q-6

STATE OF CALIFORNIA - DEPARTMENT OF TRANSPORTATION
Caltrans® DESIGN

FUNCTIONAL SUPERVISOR GEORGE LO

CALCULATED-DESIGNED BY HUNG C. HSU
CHECKED BY BER-LIN WEI

REVISED BY LC
DATE REVISED 3/24/15

LAST REVISION 03-30-15 DATE PLOTTED => 12-AUG-2015 TIME PLOTTED => 09:11

Dist	COUNTY	ROUTE	POST MILES TOTAL PROJECT	SHEET No.	TOTAL SHEETS
04	Ala	580, 680	Var	45	143

REGISTERED CIVIL ENGINEER 3/24/15 DATE

3-30-15
PLANS APPROVAL DATE

REGISTERED PROFESSIONAL ENGINEER Ber-lin Wei No. 49855 Exp. 9-30-16 CIVIL STATE OF CALIFORNIA

THE STATE OF CALIFORNIA OR ITS OFFICERS OR AGENTS SHALL NOT BE RESPONSIBLE FOR THE ACCURACY OR COMPLETENESS OF SCANNED COPIES OF THIS PLAN SHEET.

2

ROADWAY QUANTITIES

PROJECT WORK LOCATIONS															
LOCATION No.	ROUTE	SHOULDER	POST MILE	DIRECTION	DESCRIPTION	MIDWEST GUARDRAIL SYSTEM STANDARD PLAN LAYOUT	REMOVE AC DIKE	REMOVE GUARDRAIL	REMOVE MARKER (N)	HMA (TYPE A)	PLACE HMA DIKE (TYPE C)	PLACE HMA DIKE (TYPE F)	OBJECT MARKER (TYPE L-1)	TREATED WOOD WASTE	MINOR CONCRETE (MISCELLANEOUS CONSTRUCTION)
							LF		EA	TON	LF		EA	LB	CY
41E	580	R+	R33.94	EB	MAINLINE - GRAND Ave OC (Br 33-0330)	12B	25.0	62.500	2	0.31		25.0	1	800.0	0.39
39R	580	R+	R31.75	EB	MAINLINE - 164TH Ave UC (Br 33-0395L)	12B		62.500	2				1	800.0	0.08
39L	580	L+	R31.75	EB	MAINLINE - 164TH Ave UC (Br 33-0395L)	12B	87.5	50.000	2	0.70	62.5	25.0	1	800.0	0.08
38R	580	R+	31.63	EB	ON-RAMP FROM LIBERTY St	12B		62.500	2				1	800.0	0.08
38L	580	L+	31.63	EB	ON-RAMP FROM LIBERTY St	12B	25.0	62.500	2	0.31		25.0	1	800.0	0.12
37R	580	R+	R31.38	EB	MAINLINE - 167TH Ave UC (Br 33-0396L)	12B		62.500	2				1	800.0	0.08
37L	580	L+	R31.38	EB	MAINLINE - 167TH Ave UC (Br 33-0396L)	12B	87.5	50.000	2	0.70	62.5	25.0	1	800.0	0.08
33	580	L+	30.39	EB	MAINLINE - STROBRIDGE Ave UC (Br 33-0189L)	12D		56.625	2					685.7	0.08
31	580	R+	30.16	EB	ON-RAMP FROM STROBRIDGE Ave	12B	25.0	62.500	2	0.31		25.0	1	800.0	0.19
12	580	R+	19.39	EB	MAINLINE - DOUGHERTY Rd OH (Br 33-0150L)	12B	53.1	59.125	2	0.66		53.1		685.7	0.13
16	580	R+	21.20	WB	OFF-RAMP TO NB SAN RAMON Rd	12B		62.500					1	750.0	0.08
69	580	R+	43.23	EB	MAINLINE - LAKE PARK Ave OC (Br No. 33-0314)	12B		62.500					1	750.0	0.08
49	580	R+	R36.75	EB	MAINLINE - OAK KNOLL Blvd OC (Br No. 33-0353)	12C		50.000					1	600.0	0.39
30	580	R+	R29.40	EB	MAINLINE - REDWOOD Rd UC (Br No. 33-0193L)	12B	148.3	123.250		1.43	67.0	81.3	1	1479.0	0.10
29	580	R+	R28.62	EB	MAINLINE - CROW Cr (Br No. 33-0232L)	12B	87.5	62.500		0.70	62.5	25.0	1	750.0	0.10
26	580	R+	R28.41	EB	MAINLINE - CROW CANYON Rd UC (Br No. 33-0233L)	12D	53.1	57.625		0.66		53.1		691.5	0.10
144	680	R+	M3.35	NB	MAINLINE - GRIMMER Blvd UC (Br 33-0429R)	12B		62.500	1				1	750.0	0.13
145	680	R+	M6.05	NB	MAINLINE - 750' NORTH OF PALM Ave OC (Br 33-0360)	12B		62.500	2				1	750.0	0.19
155R	680	R+	19.32	NB	ON-RAMP FROM WB STONERIDGE Dr	12B	25.0	62.500	2	0.31		25.0	1	750.0	0.08
155L	680	L+	19.32	NB	ON-RAMP FROM WB STONERIDGE Dr	12B		62.500	2				1	750.0	0.08
156	680	R+	19.81	NB	OFF-RAMP TO EB ROUTE 580	12B	25.0	62.500	2	0.31		25.0	1	750.0	0.08
157	680	R+	R20.03	NB	MAINLINE ROUTE 680-580 Sep (Br 33-0371)	15A	~~109.6~~ 145.5	37.500	2	~~0.69~~ 0.91	~~109.6~~ 145.5			450.0	0.08
157RAMP	680	L+	R20.03	NB	RAMP/ROUTE 680-580 Sep	15A		37.500	2					450.0	0.12
158	680	R+	R20.28	NB	ON-RAMP FROM WB ROUTE 580	12B	25.0	62.500	1	0.31		25.0	1	750.0	0.08
159R	680	R+	R23.32	NB	ON-RAMP FROM VILLAGE Pkwy	12B	25.0	62.500	2	0.31		25.0	1	750.0	0.08
159L	680	L+	R23.32	NB	ON-RAMP FROM VILLAGE Pkwy	12B		62.500	2				1	750.0	0.08
160	680	R+	R20.73	NB	MAINLINE - AMADOR VALLEY Blvd UC (Br 33-0356)	12D		56.625						679.5	0.08
134R	680	R+	R21.73	SB	ON-RAMP FROM ALCOSTA Blvd	12B	25.0	62.500	2	0.31		25.0	1	750.0	0.11
134L	680	L+	R21.73	SB	ON-RAMP FROM ALCOSTA Blvd	12B		~~57.792~~ 87.500	2				1	~~693.5~~ 1050.0	0.10
135	680	R+	21.64	SB	MAINLINE - 500' SOUTH OF SB ON-RAMP FROM ALCOSTA Blvd	12B	25.0	62.500	2	0.3		25.0	1	750.0	0.11
136	680	R+	21.35	SB	MAINLINE - 2000' SOUTH OF SB ON-RAMP FROM ALCOSTA Blvd	12B		62.500	2				1	750.0	0.19
137	680	L+	20.36	SB	OFF-RAMP TO WB ROUTE 580	12B		62.500	2				1	750.0	0.08
SHEET SUBTOTAL							~~562.7~~ 887.4	~~1530.167~~ 1978.250	48	~~5.53~~ 8.54	~~234.6~~ 400.0	~~328.1~~ 487.5	~~21~~ 26	~~19044.4~~ 24421.4	3.92
SUBTOTAL (SHEETS Q-1 AND Q-4)							862.8	~~4268.091~~ 4249.341	104	8.39	381.6	481.2	~~38~~ 41	~~51159.8~~ 51028.5	8.66
GRAND TOTAL							~~1425.5~~ 1750.2	~~5798.258~~ 6227.591	152	~~13.92~~ 16.93	~~616.2~~ 781.6	~~809.3~~ 968.7	~~59~~ 67	~~70244.2~~ 75449.9	12.58

2 **REPLACED PER ADDENDUM No. 2 DATED AUGUST 13, 2015**

SUMMARY OF QUANTITIES

Q-7

STATE OF CALIFORNIA - DEPARTMENT OF TRANSPORTATION
Caltrans DESIGN

FUNCTIONAL SUPERVISOR: GEORGE LO
CALCULATED-DESIGNED BY: HUNG C. HSU
CHECKED BY: BER-LIN WEI
REVISED BY: LC
DATE REVISED: 3/24/15

LAST REVISION 03-30-15
DATE PLOTTED => 12-AUG-2015
TIME PLOTTED => 09:11

Dist	COUNTY	ROUTE	POST MILES TOTAL PROJECT	SHEET No.	TOTAL SHEETS
04	Ala	580, 680	Var	46	143

REGISTERED CIVIL ENGINEER 3/24/15 DATE

3-30-15
PLANS APPROVAL DATE

REGISTERED PROFESSIONAL ENGINEER Ber-lin Wei No. 49855 Exp. 9-30-16 CIVIL STATE OF CALIFORNIA

THE STATE OF CALIFORNIA OR ITS OFFICERS OR AGENTS SHALL NOT BE RESPONSIBLE FOR THE ACCURACY OR COMPLETENESS OF SCANNED COPIES OF THIS PLAN SHEET.

2

ROADWAY QUANTITIES

PROJECT WORK LOCATIONS																	
LOCATION No.	ROUTE	SHOULDER	POST MILE	DIRECTION	DESCRIPTION	MIDWEST GUARDRAIL SYSTEM STANDARD PLAN LAYOUT	OBJECT MARKER (TYPE P)	OBJECT MARKER (TYPE R)	GUARD RAILING DELINEATOR TYPE F	GUARD RAILING DELINEATOR TYPE G	MGS (WOOD POST)	TRANSITION RAILING (WB-31)	ALTERNATIVE FLARED TERMINAL SYSTEM	ALTERNATIVE IN-LINE TERMINAL SYSTEM	CRASH CUSHION (TYPE CAT)		REMOVE FLARED END SECTION
							EA				LF	EA					
41E	580	R†	R33.94	EB	MAINLINE - GRAND Ave OC (Br 33-0330)	12B	2 +		3			1	1				1
39R	580	R†	R31.75	EB	MAINLINE - 164TH Ave UC (Br 33-0395L)	12B	2 +		2			1	1				1
39L	580	L†	R31.75	EB	MAINLINE - 164TH Ave UC (Br 33-0395L)	12B	2 +			2		1	1				1
38R	580	R†	31.63	EB	ON-RAMP FROM LIBERTY St	12B	2 +		2			1	1				1
38L	580	L†	31.63	EB	ON-RAMP FROM LIBERTY St	12B	2 +			2		1	1				1
37R	580	R†	R31.38	EB	MAINLINE - 167TH Ave UC (Br 33-0396L)	12B	2 +		2			1	1				1
37L	580	L†	R31.38	EB	MAINLINE - 167TH Ave UC (Br 33-0396L)	12B	2 +			2		1	1				1
33	580	L†	30.39	EB	MAINLINE - STROBRIDGE Ave UC (Br 33-0189L)	12D	2 +			2	28.125	1					
31	580	R†	30.16	EB	ON-RAMP FROM STROBRIDGE Ave	12B	2 +		2			1	1				1
12	580	R†	19.39	EB	MAINLINE - DOUGHERTY Rd OH (Br 33-0150L)	12B	2 +		2		28.125	1					
16	580	R†	21.20	WB	OFF-RAMP TO NB SAN RAMON Rd	12B	2		2			1	1				
69	580	R†	43.23	EB	MAINLINE - LAKE PARK Ave OC (Br No. 33-0314)	12B	2		2			1	1				
49	580	R†	R36.75	EB	MAINLINE - OAK KNOLL Blvd OC (Br No. 33-0353)	12C	2		2		37.500	1					
30	580	R†	R29.40	EB	MAINLINE - REDWOOD Rd UC (Br No. 33-0193L)	12B	2		4		56.250	1	1				
29	580	R†	R28.62	EB	MAINLINE - CROW Cr (Br No. 33-0232L)	12B	2		2			1	1				
26	580	R†	R28.41	EB	MAINLINE - CROW CANYON Rd UC (Br No. 33-0233L)	12D	2		2		28.125	1					
144	680	R†	M 3.35	NB	MAINLINE - GRIMMER Blvd UC (Br 33-0429R)	12B	2 +		2			1	1				1
145	680	R†	M 6.05	NB	MAINLINE - 750' NORTH OF PALM Ave OC (Br 33-0360)	12B	2 +		2			1	1				1
155R	680	R†	19.32	NB	ON-RAMP FROM WB STONERIDGE Dr	12B	2 +		2			1	1				1
155L	680	L†	19.32	NB	ON-RAMP FROM WB STONERIDGE Dr	12B	2 +			2		1	1				1
156	680	R†	19.81	NB	OFF-RAMP TO EB ROUTE 580	12B	2 +		2			1	1				1
157	680	R†	R20.03	NB	MAINLINE - ROUTE 680/580 Sep (Br 33-0371)	15A	2 +	1	4 ~~3~~		81.250 ~~40.625~~	1			1		
157RAMP	680	L†	R20.03	NB	RAMP/ROUTE 680/580 Sep	15A	2 +			4 ~~3~~	~~40.625~~ 78.125	1					
158	680	R†	R20.28	NB	ON-RAMP FROM WB ROUTE 580	12B	2 +		2			1	1				1
159R	680	R†	R23.32	NB	ON-RAMP FROM VILLAGE Pkwy	12B	2 +		2			1	1				1
159L	680	L†	R23.32	NB	ON-RAMP FROM VILLAGE Pkwy	12B	2 +			2		1	1				1
160	680	R†	R20.73	NB	MAINLINE - AMADOR VALLEY Blvd UC (Br 33-0356)	12D	2 +		2		28.125	1					
134R	680	R†	R21.73	SB	ON-RAMP FROM ALCOSTA Blvd	12B	2 +		2			1	1				1
134L	680	L†	R21.73	SB	ON-RAMP FROM ALCOSTA Blvd	12B	2 +			3 ~~2~~	~~22.125~~ 25.000	1	1				1
135	680	R†	21.64	SB	MAINLINE - 500' SOUTH OF SB ON-RAMP FROM ALCOSTA Blvd	12B	2 +		2			1	1				1
136	680	R†	21.35	SB	MAINLINE - 2000' SOUTH OF SB ON-RAMP FROM ALCOSTA Blvd	12B	2 +		2			1	1				1
137	680	L†	20.36	SB	OFF-RAMP TO WB ROUTE 580	12B	2 +			2		1	1				1
SHEET SUBTOTAL							64 ~~26~~	1	51 ~~36~~	21 ~~19~~	~~193.750~~ 390.600	~~26~~ 32	~~21~~ 25		1		21
SUBTOTAL (SHEETS Q-2 AND Q-5)							127 ~~64~~	7	126 ~~125~~	27 ~~25~~	~~1449.500~~ 1546.900	64	36	1	1		38
GRAND TOTAL							191 ~~90~~	8	225 ~~205~~		~~1643.250~~ 1937.500	~~90~~ 96	~~57~~ 61	1	2		59

2 **REPLACED PER ADDENDUM No. 2 DATED AUGUST 13, 2015**

SUMMARY OF QUANTITIES

Q-8

STATE OF CALIFORNIA - DEPARTMENT OF TRANSPORTATION
Caltrans® DESIGN
FUNCTIONAL SUPERVISOR GEORGE LO
CALCULATED-DESIGNED BY HUNG C. HSU
CHECKED BY BER-LIN WEI
REVISED BY LC
DATE REVISED 3/24/15

LAST REVISION 03-30-15 | DATE PLOTTED => 12-AUG-2015 | TIME PLOTTED => 09:11

Dist	COUNTY	ROUTE	POST MILES TOTAL PROJECT	SHEET No.	TOTAL SHEETS
04	Ala	580, 680	Var	47	143

REGISTERED CIVIL ENGINEER 3/24/15 DATE

3-30-15
PLANS APPROVAL DATE

REGISTERED PROFESSIONAL ENGINEER Ber-lin Wei No. 49855 Exp. 9-30-16 CIVIL STATE OF CALIFORNIA

THE STATE OF CALIFORNIA OR ITS OFFICERS OR AGENTS SHALL NOT BE RESPONSIBLE FOR THE ACCURACY OR COMPLETENESS OF SCANNED COPIES OF THIS PLAN SHEET.

2

ROADWAY QUANTITIES

PROJECT WORK LOCATIONS													
LOCATION No.	ROUTE	SHOULDER	POST MILE	DIRECTION	DESCRIPTION	MIDWEST GUARDRAIL SYSTEM STANDARD PLAN LAYOUT	RESET ROADSIDE SIGN (ONE POST)	VEGETATION CONTROL (MINOR CONCRETE)	TEMPORARY RAILING (TYPE K)	TEMPORARY CRASH CUSHION MODULE	TEMPORARY ALTERNATIVE CRASH CUSHION	CHANNELIZER (SURFACE MOUNTED)	REFERENCES
							EA	SQYD	LF	EA	EA		
41E	580	R†	R33.94	EB	MAINLINE - GRAND Ave OC (Br 33-0330)	12B		51.3	60	~~14~~	1	10	SHEET C-14 AND STRUCTURE SHEET 25 & 30
39R	580	R†	R31.75	EB	MAINLINE - 164TH Ave UC (Br 33-0395L)	12B		51.3	60 ~~40~~	14		10	SHEET C-2 AND STRUCTURE SHEET 2 & 27
39L	580	L†	R31.75	EB	MAINLINE - 164TH Ave UC (Br 33-0395L)	12B		51.3	40	~~14~~	1	10	SHEET C-15 AND STRUCTURE SHEET 2 & 27
38R	580	R†	31.63	EB	ON-RAMP FROM LIBERTY St	12B		57.3	40	~~14~~	1	10	SHEET C-1 AND STRUCTURE SHEET 2 & 27
38L	580	L†	31.63	EB	ON-RAMP FROM LIBERTY St	12B		51.3	40	~~14~~	1	10	SHEET C-15 AND STRUCTURE SHEET 11 & 29
37R	580	R†	R31.38	EB	MAINLINE - 167TH Ave UC (Br 33-0396L)	12B		51.3	160 ~~40~~	14		10	SHEET C-13 AND STRUCTURE SHEET 2 & 27
37L	580	L†	R31.38	EB	MAINLINE - 167TH Ave UC (Br 33-0396L)	12B		51.3	40	~~14~~	1	10	SHEET C-12 AND STRUCTURE SHEET 2 & 27
33	580	L†	30.39	EB	MAINLINE - STROBRIDGE Ave UC (Br 33-0189L)	12D		46.9	60 ~~40~~	14		10	SHEET C-5 AND STRUCTURE SHEET 14 & 31
31	580	R†	30.16	EB	ON-RAMP FROM STROBRIDGE Ave	12B		51.3	60 ~~40~~	14		10	SEE DETAIL , SHEETS C-14 & Q-10
12	580	R†	19.39	EB	MAINLINE - DOUGHERTY Rd OH (Br 33-0150L)	12D ~~12B~~		42.9	80 ~~40~~	14		10	SHEET C-21 AND STRUCTURE SHEET 15 & 31
16	580	R†	21.20	WB	OFF-RAMP TO NB SAN RAMON Rd	12B		57.3	40		1	10	SHEET C-1 AND STRUCTURE SHEET 20A & 31A
69	580	R†	43.23	EB	MAINLINE - LAKE PARK Ave OC (Br No. 33-0314)	12B		57.3	80	14		10	SHEET C-1 AND STRUCTURE SHEET 20C & 31A
49	580	R†	R36.75	EB	MAINLINE - OAK KNOLL Blvd OC (Br No. 33-0353)	12C		51.3	100	14		10	SHEET C-11 AND STRUCTURE SHEET 20B & 31A
30	580	R†	R29.40	EB	MAINLINE - REDWOOD Rd UC (Br No. 33-0193L)	12B		79.8	60	14		10	SHEET C-10 AND STRUCTURE SHEET 15A & 31A
29	580	R†	R28.62	EB	MAINLINE - CROW Cr (Br No. 33-0232L)	12B		51.3	60	14		10	SHEET C-16 AND STRUCTURE SHEET 15A & 31A
26	580	R†	R28.41	EB	MAINLINE - CROW CANYON Rd UC (Br No. 33-0233L)	12D		42.9	40		1	10	SHEET C-21 AND STRUCTURE SHEET 15A & 31A
144	680	R†	M3.35	NB	MAINLINE - GRIMMER Blvd UC (Br 33-0429R)	12B		51.3	80 ~~40~~	14		10	SHEET C-2 AND STRUCTURE SHEET 10 & 32
145	680	R†	M6.05	NB	MAINLINE - 750' NORTH OF PALM Ave OC (Br 33-0360)	12B		57.3	80 ~~40~~	14		10	SHEET C-1 AND STRUCTURE SHEET 16 & 32
155R	680	R†	19.32	NB	ON-RAMP FROM WB STONERIDGE Dr	12B		51.3	40	~~14~~	1	10	SHEET C-14 AND STRUCTURE SHEET 14 & 32
155L	680	L†	19.32	NB	ON-RAMP FROM WB STONERIDGE Dr	12B		57.3	40	~~14~~	1	10	SHEET C-13 AND STRUCTURE SHEET 14 & 32
156	680	R†	19.81	NB	OFF-RAMP TO EB ROUTE 580	12B		51.3	40	~~14~~	1	10	SHEET C-14 AND STRUCTURE SHEET 14 & 32
157	680	R†	R20.03	NB	MAINLINE ROUTE 680/580 Sep (Br 33-0371)	15A		~~121.4~~	100 ~~40~~	~~14~~	1	10	SHEET C-22 AND STRUCTURE SHEET 2 & 32
157RAMP	680	L†	R20.03	NB	RAMP ROUTE 680/580 Sep	15A		~~121.4~~	100 ~~40~~	~~14~~	1	10	SHEET C-22 AND STRUCTURE SHEET 11 & 32
158	680	R†	R20.28	NB	ON-RAMP FROM WB ROUTE 580	12B		51.3	60 ~~40~~	14		10	SHEET C-14 AND STRUCTURE SHEET 14 & 32
159R	680	R†	R23.32	NB	ON-RAMP FROM VILLAGE Pkwy	12B	1	51.3	60 ~~40~~	14		10	SHEET C-14 AND STRUCTURE SHEET 14 & 32
159L	680	L†	R23.32	NB	ON-RAMP FROM VILLAGE Pkwy	12B		57.3	40	~~14~~	1	10	SHEET C-13 AND STRUCTURE SHEET 14 & 32
160	680	R†	R20.73	NB	MAINLINE - AMADOR VALLEY Blvd UC (Br 33-0356)	12D		42.9	100 ~~40~~	14		10	SHEET C-5 AND STRUCTURE SHEET 14 & 32
134R	680	R†	R21.73	SB	ON-RAMP FROM ALCOSTA Blvd	12B		51.3	40	~~14~~	1	10	SHEET C-14 AND STRUCTURE SHEET 19 & 33
134L	680	L†	R21.73	SB	ON-RAMP FROM ALCOSTA Blvd	12B		70.5 ~~77.2~~	40	~~14~~	1	10	SHEET C-18 AND STRUCTURE SHEET 20 & 33
135	680	R†	21.64	SB	MAINLINE - 500' SOUTH OF SB ON-RAMP FROM ALCOSTA Blvd	12B		51.3	40	~~14~~	1	10	SHEET C-14 AND STRUCTURE SHEET 19 & 33
136	680	R†	21.35	SB	MAINLINE - 2000' SOUTH OF SB ON-RAMP FROM ALCOSTA Blvd	12B		57.3	60 ~~40~~	14		10	SHEET C-1 AND STRUCTURE SHEET 16 & 32
137	680	L†	20.36	SB	OFF-RAMP TO WB ROUTE 580	12B		57.3	40	~~14~~	1	10	SHEET C-13 AND STRUCTURE SHEET 14 & 32
SHEET TOTAL							1	~~1514.7~~ 1605.0	~~1060~~ 1960	~~364~~ 210	17	320	
SUBTOTAL (SHEETS Q-3 AND Q-6)							5	~~3741.4~~ 3649.6	~~2620~~ 3940	~~882~~ 476	32	630	
GRAND TOTAL							6	~~5256.1~~ 5254.6	~~3680~~ 5900	~~1246~~ 686	49	950	

2 **REPLACED PER ADDENDUM No. 2 DATED AUGUST 13, 2015**

SUMMARY OF QUANTITIES

Q-9

STATE OF CALIFORNIA - DEPARTMENT OF TRANSPORTATION
Caltrans® DESIGN

FUNCTIONAL SUPERVISOR: GEORGE LO
CALCULATED-DESIGNED BY: HUNG C. HSU
CHECKED BY: BER-LIN WEI
REVISED BY: LC
DATE REVISED: 3/24/15

LAST REVISION 03-30-15
DATE PLOTTED => 12-AUG-2015
TIME PLOTTED => 09:11

Dist	COUNTY	ROUTE	POST MILES TOTAL PROJECT	SHEET No.	TOTAL SHEETS
04	Ala	580, 680	Var	48	143

REGISTERED CIVIL ENGINEER 3/24/15 DATE

3-30-15
PLANS APPROVAL DATE

REGISTERED PROFESSIONAL ENGINEER Ber-lin Wei No. 49855 Exp. 9-30-16 CIVIL STATE OF CALIFORNIA

THE STATE OF CALIFORNIA OR ITS OFFICERS OR AGENTS SHALL NOT BE RESPONSIBLE FOR THE ACCURACY OR COMPLETENESS OF SCANNED COPIES OF THIS PLAN SHEET.

2

MISCELLANEOUS ROADWAY QUANTITIES

LOCATION No.	REMOVE CRASH CUSHION (SAND FILLED)	CRASH CUSHION, SAND FILLED	REMOVE CONCRETE ISLAND (PORTION)	MINOR CONCRETE (ISLAND PAVING)
	EA		SQYD	CY
55				1.9
64L & 65W	1 ~~12~~			
74L & 77R	1 ~~20~~	14	31.2	~~2.6~~
77L	1 ~~12~~	14	19.3	~~2.6~~
81W	1 ~~12~~	14	19.3	~~2.6~~
83	1 ~~12~~	14	19.3	~~2.6~~
157 & 157RAMP	1 ~~12~~		77.4	9.5
TOTAL	6 ~~80~~	56	166.5 ~~89.1~~	11.4 ~~10.4~~

~~BURIED POST END ANCHOR~~

LOCATION No.	EA
41W	1
54	1
57	1
TOTAL	3

MISCELLANEOUS ROADWAY QUANTITIES

LOCATION No.	REMOVE CONCRETE (CURB AND GUTTER)	MINOR CONCRETE (CURB AND GUTTER)	REMOVE ASPHALT CONCRETE SURFACING
	LF		SQFT
55	22.0	22.0	
74L & 77R			
77L			
81W			
83			
157 & 157RAMP	101.8	101.8	765.9
TOTAL	123.8	123.8	765.9

RETURN CAP (TYPE A)

	LOCATION No.	EA
74L & 77R	~~77L & 81W~~	1
	77L	1
	81W	1
	83	1
	TOTAL	4

CONCRETE BARRIER (TRANSITION)

~~CONNECT GUARD RAILING TO STRUCTURE~~

LOCATION No.	ANCHOR BLOCK FOR TRANSITION RAILING CONNECTION (SEE RSP A77U3 FOR DETAILS)
	EA
31	1
TOTAL	1

2 **REPLACED PER ADDENDUM No. 2 DATED AUGUST 13, 2015**

SUMMARY OF QUANTITIES

Q-10

STATE OF CALIFORNIA - DEPARTMENT OF TRANSPORTATION
Caltrans® DESIGN
FUNCTIONAL SUPERVISOR: GEORGE LO
CALCULATED-DESIGNED BY: HUNG C. HSU
CHECKED BY: BER-LIN WEI
REVISED BY: LC
DATE REVISED: 3/24/15

LAST REVISION 03-30-15 | DATE PLOTTED => 12-AUG-2015 | TIME PLOTTED => 09:11

Dist	COUNTY	ROUTE	POST MILES TOTAL PROJECT	SHEET No.	TOTAL SHEETS
04	Ala	580, 680	Var	49	143

REGISTERED CIVIL ENGINEER 3/24/15 DATE

3-30-15
PLANS APPROVAL DATE

REGISTERED PROFESSIONAL ENGINEER Ber-lin Wei No. 49855 Exp. 9-30-16 CIVIL STATE OF CALIFORNIA

THE STATE OF CALIFORNIA OR ITS OFFICERS OR AGENTS SHALL NOT BE RESPONSIBLE FOR THE ACCURACY OR COMPLETENESS OF SCANNED COPIES OF THIS PLAN SHEET.

IRRIGATION QUANTITIES

LOCATION No.	DIRECTION/ ROUTE	PM	LEFT OR RIGHT SHOULDER	DESCRIPTION	RELOCATE VALVE*	REMOVE IRRIGATION FACILITIES		PLASTIC PIPE IRRIGATION SUPPLY LINE				SPRINKLER ASSEMBLY		
						IRRIGATION SUPPLY LINE	SPRINKLER ASSEMBLY					RISER		POP-UP
								3/4"	1"	1-1/4"	1-1/2"	TYPE I	TYPE V	TYPE II
					(EA)	LF (N)	EA (N)	LF				EA		
40	WB/580	32.72	RIGHT	PLAZA Dr OC (FAIRMONT DR OC)	1	20	4	20	20					4
41W	WB/580	33.94	RIGHT	GRAND Ave OC		40	3	20	30	10		3		
47	WB/580	36.34	RIGHT	GOLF LINKS Rd UC	2	40	3	20	30	10		3		
50W	WB/580	38.31	RIGHT	EDWARDS Ave UC	1	80	4	20	60	10	10	4		
51W	WB/580	38.92	RIGHT	KUHNLE Ave UC	1	40	4	20	30	10		4		
52	WB/580	39.37	RIGHT	DAVENPORT Ave UC	1	40	4	20	30	10		4		
54	WB/580	39.45	RIGHT	ON-RAMP FROM MOUNTAIN Blvd (ROUTE 13)	1	40	4	20	30	10		4		
61W	WB/580	41.33	RIGHT	BOSTON Ave OC	1	60	6	20	40	10	10	6		
64R	WB/580	42.05	RIGHT	OFF-RAMP TO BEAUMONT Ave/BRUCE St		40	4	20	40	10		4		
66W	WB/580	42.18	RIGHT	BEAUMONT Ave UC	1	40	4	20	40			4		
74R	WB/580	44.86	RIGHT	OFF-RAMP TO WB ROUTE 24		40	4	20	40	10		4		
76	EB/580	45.03	RIGHT	TELEGRAPH Ave UC		40	3	20	40			3		
72	EB/580	44.28	RIGHT	OAKLAND Ave UC	1	60	6	20	60	10	10		6	
61E	EB/580	41.33	RIGHT	BOSTON Ave OC		40	4	20	40			4		
58	EB/580	39.95	RIGHT	OFF-RAMP TO SB MacARTHUR Blvd		40	4	20	40			4		
51E	EB/580	38.92	RIGHT	KUHNLE Ave UC	2									
50E	EB/580	38.31	RIGHT	EDWARDS Ave UC		40	4	20	40			4		
48	EB/580	36.38	RIGHT	GOLF LINKS Rd UC	1	40	4	20	40			4		
46E	EB/580	35.71	RIGHT	106TH Ave UC	2	60	6	20	60	10	10	6		
45E	EB/580	35.05	RIGHT	FOOTHILL Blvd UC		40	4	20	40			4		
37R	EB/580	31.38	RIGHT	167TH Ave UC		40	4	20	40				4	
134R	SB/680	21.73	RIGHT	ON-RAMP FROM ALCOSTA Blvd	2	40	4	20	40				4	
134L	SB/680	21.73	LEFT	ON-RAMP FROM ALCOSTA Blvd		40		20	40					
155R	NB/680	19.37	RIGHT	ON-RAMP FROM WB STONERIDGE Dr	1	40	4	20	40				4	
69	EB/580	43.23	RIGHT	LAKE PARK Ave OC		40	4	20	30	10		4		
SUBTOTAL					18			~~460~~ 480	~~910~~ 940	~~110~~ 120	40	~~69~~ 73	18	4
TOTAL					18			~~460~~ 480	~~910~~ 940	~~110~~ 120	40	~~87~~ 91		4

2

(N) - NOT A SEPARATE PAY ITEM, FOR INFORMATION ONLY

NOTE:

* RELOCATE VALVE 5' FROM EXISTING VALVE LOCATION.

2 **REPLACED PER ADDENDUM No. 2 DATED AUGUST 13, 2015**

IRRIGATION QUANTITIES

IQ-1

STATE OF CALIFORNIA - DEPARTMENT OF TRANSPORTATION
Caltrans®
DESIGN

FUNCTIONAL SUPERVISOR: GEORGE LO
CALCULATED-DESIGNED BY: HUNG C. HSU
CHECKED BY: BER-LIN WEI
REVISED BY: LC
DATE REVISED: 3/24/15

LAST REVISION 03-05-15
DATE PLOTTED => 12-AUG-2015
TIME PLOTTED => 09:11

Dist	COUNTY	ROUTE	POST MILES TOTAL PROJECT	SHEET No.	TOTAL SHEETS
04	Ala	580, 680	Var	50	143

Alex McDonald
LICENSED LANDSCAPE ARCHITECT

3-30-15
PLANS APPROVAL DATE

LICENSED LANDSCAPE ARCHITECT ALEXANDER K. I. MCDONALD No. 5242 Alex McDonald Registrant 8-31-16 Renewal Date 3-27-15 Date STATE OF CALIFORNIA

THE STATE OF CALIFORNIA OR ITS OFFICERS OR AGENTS SHALL NOT BE RESPONSIBLE FOR THE ACCURACY OR COMPLETENESS OF SCANNED COPIES OF THIS PLAN SHEET.

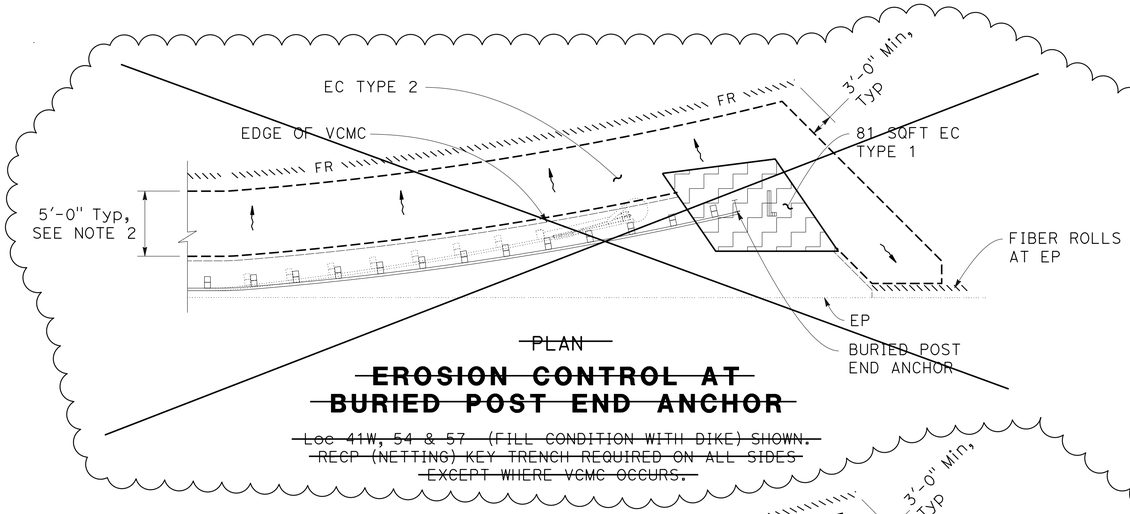

~~PLAN~~

~~**EROSION CONTROL AT BURIED POST END ANCHOR**~~

~~Loc 41W, 54 & 57 (FILL CONDITION WITH DIKE) SHOWN. RECP (NETTING) KEY TRENCH REQUIRED ON ALL SIDES EXCEPT WHERE VCMC OCCURS.~~

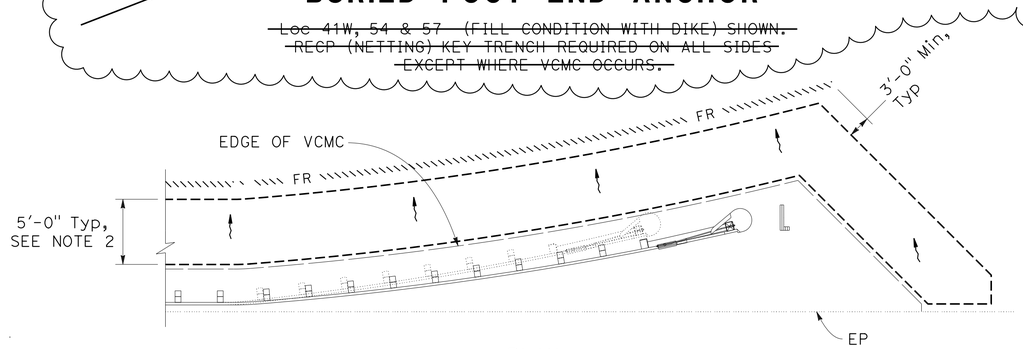

PLAN

EROSION CONTROL TYPE 2 AT VEGETATION CONTROL, TYPICAL

ALTERNATIVE FLARED TERMINAL SYSTEM (FILL CONDITION WITH DIKE) SHOWN.
EXTEND EROSION CONTROL PAST VCMC LIMITS AS NEEDED FOR HMA DIKE WORK
(Loc 71, 77R, 81W, 86L, 75, 61E, 39L, 37L & 157).
MGS/CAT-350 RECEIVES COMPOST ON BOTH SIDES OF VCMC
(Loc 64L, 65W, 74L, 77R, 77L, 81W, 83, 157 & 157RAMP).

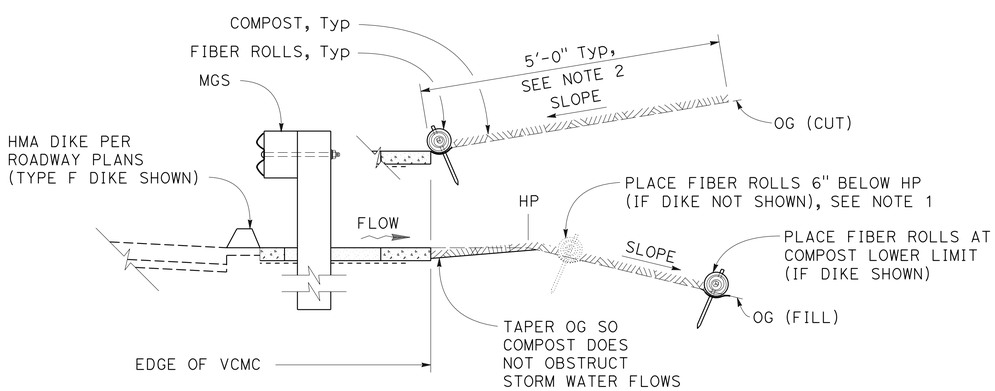

TYPICAL SECTION

EROSION CONTROL TYPE 2 AT VEGETATION CONTROL

LEGEND:

~~ROLLED EROSION CONTROL PRODUCT (NETTING)~~

COMPOST

ABBREVIATION:

VCMC	VEGETATION CONTROL (MINOR CONCRETE)

NOTES:

1. IF EDGE OF VCMC AND HINGE POINT COINCIDE, PLACE FIBER ROLLS AT EDGE OF VCMC.
2. NOT TO EXCEED LIMTS OF SOIL DISTURBANCE, AS DIRECTED BY ENGINEER OR UP TO RIGHT OF WAY FENCE.

~~**SEED MIX**~~

SEED	BOTANICAL NAME (COMMON NAME)	PERCENT GERMINATION (MINIMUM)	POUNDS PURE LIVE SEED PER ACRE (SLOPE MEASUREMENT)
MIX 1	HORDEUM BRACHYANTHERUM (MEADOW BARLEY)	40	12
	LEYMUS TRITICOIDES (CREEPING WILDRYE)	35	12
	NASSELLA PULCHRA (PURPLE NEEDLEGRASS)	35	24
	VULPIA MICROSTACHYS (THREE WEEKS FESCUE)	45	12

2

~~**EROSION CONTROL TYPE 1**~~

SEQUENCE	ITEM	MATERIAL DESCRIPTION	MATERIAL TYPE	APPLICATION RATE	DEPTH	REMARKS
STEP 1	COMPOST	COMPOST	MEDIUM	135 CY/ACRE	1"	-
	EROSION CONTROL (DRY SEED)	DRY SEED	MIX 1	60 LB/ACRE	-	-
STEP 2	ROLLED EROSION CONTROL PRODUCT (NETTING)	NETTING	TYPE A	-	-	-

EROSION CONTROL TYPE 2

SEQUENCE	ITEM	MATERIAL DESCRIPTION	MATERIAL TYPE	APPLICATION RATE	DEPTH	REMARKS
STEP 1	FIBER ROLLS	FIBER ROLL	8 TO 10 INCHES IN Dia	-	-	RICE STRAW FILLED, JUTE COVERED AND INSTALLATION TYPE 1
STEP 2	COMPOST	COMPOST	COARSE	404 CY/ACRE	3"	MAY BE SUBSTITUTED WITH TREE TRIMMING WOOD MULCH

2 **REPLACED PER ADDENDUM No. 2 DATED AUGUST 13, 2015**

EROSION CONTROL LEGEND AND DETAILS

NO SCALE

ECL-1

REVISED BY	DATE REVISED
AKM	3/27/15

ALEX MCDONALD — CHRIS PADICK — CALCULATED-DESIGNED BY — CHECKED BY — SENIOR LANDSCAPE ARCHITECT — DAVID W. YAM

STATE OF CALIFORNIA - DEPARTMENT OF TRANSPORTATION — WATER QUALITY — Caltrans

LAST REVISION 03-04-15 — DATE PLOTTED => 12-AUG-2015 — TIME PLOTTED => 09:11

Dist	COUNTY	ROUTE	POST MILES TOTAL PROJECT	SHEET No.	TOTAL SHEETS
04	Ala	580, 680	Var	51	143

Alex McDonald
LICENSED LANDSCAPE ARCHITECT

3-30-15
PLANS APPROVAL DATE

LICENSED LANDSCAPE ARCHITECT
ALEXANDER K. MCDONALD No. 5242
Alex McDonald
Registration
8-31-16
Renewal Date
3-27-15
Date
STATE OF CALIFORNIA

THE STATE OF CALIFORNIA OR ITS OFFICERS OR AGENTS SHALL NOT BE RESPONSIBLE FOR THE ACCURACY OR COMPLETENESS OF SCANNED COPIES OF THIS PLAN SHEET.

2

EROSION CONTROL QUANTITIES

PROJECT WORK LOCATIONS: LOCATION No.	ROUTE	DESCRIPTION	COMPOST (SQFT)	EC (DRY SEED) (SQFT)	RECP (NETTING) (SQFT)	FIBER ROLLS (LF)	COMMENTS
13	580	OFF-RAMP TO DOUGHERTY Rd/HOPYARD Rd	340	-	-	74	VCMC LIMITS
28		MAINLINE - CROW Cr (Br 33-0232R)	350	-	-	76	VCMC LIMITS
32R		MAINLINE - STROBRIDGE Ave UC (Br 33-0189R)	620	-	-	130	VCMC LIMITS
32L		MAINLINE - STROBRIDGE Ave UC (Br 33-0189R)	370	-	-	80	VCMC LIMITS
34		MAINLINE - CASTRO VALLEY Blvd UC (Br 33-0202R)	535	-	-	113	VCMC LIMITS
36		MAINLINE - 167TH Ave UC (Br 33-0396R)	450	-	-	96	VCMC LIMITS
40		MAINLINE - PLAZA DRIVE OC (Br 33-0337)	360	-	-	78	VCMC LIMITS
41W		MAINLINE - GRAND Ave OC (Br 33-0330)	520	81	81	110	VCMC ~~& EC TYPE 1~~
42W		MAINLINE - JOAQUIN Ave UC (Br 33-0331)	370	-	-	80	VCMC LIMITS
45W		MAINLINE - FOOTHILL Blvd UC (Br 33-0335)	370	-	-	80	VCMC LIMITS
46W		MAINLINE - 106TH Ave UC (Br 33-0355)	405	-	-	87	VCMC LIMITS
47		MAINLINE - GOLF LINKS Rd UC (Br 33-0354)	405	-	-	87	VCMC LIMITS
50W		MAINLINE - EDWARDS Ave UC (Br 33-0341)	450	-	-	96	VCMC LIMITS
51W		MAINLINE - KUHNLE Ave UC (Br 33-0342)	430	-	-	92	VCMC LIMITS
52		MAINLINE - DAVENPORT Ave UC (Br 33-0343)	710	-	-	148	VCMC LIMITS
54		ON-RAMP FROM MOUNTAIN Blvd/ROUTE 13	445	81	81	95	VCMC ~~& EC TYPE 1~~
55		MAINLINE - MacARTHUR Blvd UC (Br 33-0316)	490	-	-	104	VCMC LIMITS
57		MAINLINE - BIRDSALL Ave POC (Br 33-0328)	460	81	81	98	VCMC ~~& EC TYPE 1~~
59W		MAINLINE - HIGH St UC (Br 33-0318)	410	-	-	88	VCMC LIMITS
60		MAINLINE - MAPLE Ave UC (Br 33-0321)	690	-	-	144	VCMC LIMITS
61W		MAINLINE - BOSTON Ave OC (Br 33-0323)	478	-	-	102	VCMC & DIKE LIMITS
64R		OFF-RAMP TO BEAUMONT Ave/BRUCE St	450	-	-	96	VCMC LIMITS
64L		OFF-RAMP TO BEAUMONT Ave/BRUCE St	1780	-	-	368	(1) CAT ~~350~~ & (2) MGS
65W		MAINLINE - 14TH Ave UC (Br 33-0309R)	1810	-	-	374	(2) MGS
66W		MAINLINE - BEAUMONT Ave UC (Br 33-0310R)	445	-	-	95	VCMC LIMITS
67W		MAINLINE - PARK Blvd UC (Br 33-0315R)	405	-	-	87	VCMC LIMITS
68		ON-RAMP FROM PARK Blvd	480	-	-	102	VCMC LIMITS
70		MAINLINE - LAKESHORE Ave UC (Br 33-0131)	340	-	-	74	VCMC LIMITS
71		OFF-RAMP TO SANTA CLARA Ave/OAKLAND Ave	650	-	-	136	VCMC & DIKE LIMITS
73		MAINLINE - BROADWAY RICHMOND Blvd UC (Br 33-0285)	735	-	-	153	VCMC LIMITS
74R		OFF-RAMP TO WB ROUTE 24	370	-	-	80	VCMC LIMITS
74L		OFF-RAMP TO WB ROUTE 24	1103	-	-	233	(2) MGS
77R		OFF-RAMP TO EB ROUTE 24	1243	-	-	261	(2) MGS & (TYPE C) DIKE
77L		OFF-RAMP TO EB ROUTE 24	680	-	-	148	(2) MGS
81W		MAINLINE - WEST St UC (MARTIN LUTHER KING JR WAY UC/Br 33-0299)	710	-	-	154	(2) MGS & (TYPE C) DIKE
83		ON-RAMP FROM WB ROUTE 24/52ND St	680	-	-	148	(2) MGS
84		MAINLINE - ADELINE St UC (Br 33-0280)	700	-	-	146	VCMC LIMITS
86L		MAINLINE - MacARTHUR Blvd UC (Br 33-0281R)	405	-	-	87	VCMC & DIKE LIMITS
85L		MAINLINE - ADELINE St UC (Br 33-0280)	370	-	-	80	VCMC LIMITS
82L		OFF-RAMP TO EB ROUTE 24	510	-	-	108	VCMC LIMITS
80L		OFF-RAMP TO WB ROUTE 980/27TH St	510	-	-	108	VCMC LIMITS
79		MAINLINE - GROVE St UC (Br 33-0299)	340	-	-	74	VCMC LIMITS
78		OFF-RAMP TO BROADWAY/WEBSTER St	380	-	-	82	VCMC LIMITS
76		MAINLINE - TELEGRAPH Ave UC (Br 33-0297)	370	-	-	80	VCMC LIMITS
75		MAINLINE - WEBSTER St UC (Br 33-0296)	458	-	-	98	VCMC & DIKE LIMITS
72		MAINLINE - OAKLAND Ave UC (Br 33-0288)	405	-	-	87	VCMC LIMITS
67E		MAINLINE - PARK Blvd UC (Br 33-0315)	405	-	-	87	VCMC LIMITS
66E		MAINLINE - BEAUMONT Ave UC (Br 33-0310)	700	-	-	146	VCMC LIMITS
65E		MAINLINE - 14TH Ave UC (Br 33-0309L)	370	-	-	80	VCMC LIMITS
63		MAINLINE - SHEFFIELD Ave OC (Br 33-0325)	370	-	-	80	VCMC LIMITS
62		OFF-RAMP TO FRUITVALE Ave	460	-	-	98	VCMC LIMITS
61E		MAINLINE - BOSTON Ave OC (Br 33-0323)	918	-	-	190	VCMC & DIKE LIMITS
59E		MAINLINE - HIGH St UC (Br 33-0318)	410	-	-	88	VCMC LIMITS
58		OFF-RAMP TO SB MacARTHUR Blvd	470	-	-	100	VCMC LIMITS
56	↓	MAINLINE - ON-RAMP FROM SB MacARTHUR Blvd	390	-	-	84	VCMC LIMITS
SUBTOTAL			30,480	-	-	6,470	

2 **REPLACED PER ADDENDUM No. 2 DATED AUGUST 13, 2015**

EROSION CONTROL QUANTITIES

PROJECT WORK LOCATIONS: LOCATION No.	ROUTE	DESCRIPTION	COMPOST (SQFT)	EC (DRY SEED) (SQFT)	RECP (NETTING) (SQFT)	FIBER ROLLS (LF)	COMMENTS
51E	580	MAINLINE - KUHNLE Ave UC (Br 33-0342)	450	-	-	96	VCMC LIMITS
50E		MAINLINE - EDWARDS Ave UC (Br 33-0341)	405	-	-	87	VCMC LIMITS
48		MAINLINE - GOLF LINKS Rd UC (Br 33-0354)	370	-	-	80	VCMC LIMITS
46E		MAINLINE - 106TH Ave UC (Br 33-0355)	700	-	-	146	VCMC LIMITS
45E		MAINLINE - FOOTHILL Blvd UC (Br 33-0335)	450	-	-	96	VCMC LIMITS
44R		ON-RAMP FROM SB FOOTHILL Blvd (Br 33-0334K)	450	-	-	96	VCMC LIMITS
44L		ON-RAMP FROM SB FOOTHILL Blvd (Br 33-0334K)	415	-	-	89	VCMC LIMITS
43E		MAINLINE - DUTTON Ave UC (Br 33-0333)	380	-	-	82	VCMC LIMITS
42E		MAINLINE - JOAQUIN Ave UC (Br 33-0331)	480	-	-	102	VCMC LIMITS
41E		MAINLINE - GRAND Ave OC (Br 33-0330)	490	-	-	104	VCMC LIMITS
39R		MAINLINE - 164TH Ave UC (Br 33-0395L)	405	-	-	87	VCMC LIMITS
39L		MAINLINE - 164TH Ave UC (Br 33-0395L)	458	-	-	98	VCMC & DIKE LIMITS
38R		ON-RAMP FROM LIBERTY St	450	-	-	96	VCMC LIMITS
38L		ON-RAMP FROM LIBERTY St	415	-	-	89	VCMC LIMITS
37R		MAINLINE - 167TH Ave UC (Br 33-0396L)	405	-	-	87	VCMC LIMITS
37L		MAINLINE - 167TH Ave UC (Br 33-0396L)	458	-	-	98	VCMC & DIKE LIMITS
33		MAINLINE - STROBRIDGE Ave UC (Br 33-0189L)	370	-	-	80	VCMC LIMITS
31		ON-RAMP FROM STROBRIDGE Ave	436	-	-	93	VCMC LIMITS
12		MAINLINE - DOUGHERTY Rd OH (Br 33-0150L)	355	-	-	77	VCMC LIMITS
16		OFF-RAMP TO NB SAN RAMON Rd	450	-	-	94	VCMC LIMITS
69		MAINLINE - LAKE PARK Ave OC (Br No. 33-0314)	450	-	-	94	VCMC LIMITS
49		MAINLINE - OAK KNOLL Blvd OC (Br No. 33-0353)	490	-	-	104	VCMC LIMITS
30		MAINLINE - REDWOOD Rd UC (Br No. 33-0193L)	767	-	-	159	VCMC & DIKE LIMITS
29		MAINLINE - CROW Cr (Br No. 33-0232L)	463	-	-	99	VCMC & DIKE LIMITS
26	↓	MAINLINE - CROW CANYON Rd UC (Br No. 33-0233L)	345	-	-	75	VCMC LIMITS
144	680	MAINLINE - GRIMMER Blvd UC (Br 33-0429R)	420	-	-	90	VCMC LIMITS
145		MAINLINE - 750′ NORTH OF PALM Ave OC (Br 33-0360)	480	-	-	102	VCMC LIMITS
155R		ON-RAMP FROM WB STONERIDGE Dr	405	-	-	87	VCMC LIMITS
155L		ON-RAMP FROM WB STONERIDGE Dr	450	-	-	96	VCMC LIMITS
156		OFF-RAMP TO EB ROUTE 580-HOPYARD Rd	405	-	-	87	VCMC LIMITS
157		MAINLINE - ROUTE 680/580 Sep (Br 33-0371)	1700	-	-	352	(1) CAT ~~350~~, (2) MGS & (TYPE C) DIKE
157RAMP		RAMP/ROUTE 680-580 Sep (Br 33-0371G)		-	-		(2) MGS
158		ON-RAMP FROM WB ROUTE 580	405	-	-	87	VCMC LIMITS
159R		ON-RAMP FROM VILLAGE Pkwy	405	-	-	87	VCMC LIMITS
159L		ON-RAMP FROM VILLAGE Pkwy	450	-	-	96	VCMC LIMITS
160		MAINLINE - AMADOR VALLEY Blvd UC (Br 33-0356)	340	-	-	74	VCMC LIMITS
134R		ON-RAMP FROM ALCOSTA Blvd	415	-	-	89	VCMC LIMITS
134L		ON-RAMP FROM ALCOSTA Blvd	555	-	-	117	VCMC LIMITS
135		MAINLINE - 500′ SOUTH OF SB ON-RAMP FROM ALCOSTA Blvd	415	-	-	89	VCMC LIMITS
136		MAINLINE - 2000′ SOUTH OF SB ON-RAMP FROM ALCOSTA Blvd	480	-	-	102	VCMC LIMITS
137	↓	OFF-RAMP TO WB ROUTE 580	450	-	-	96	VCMC LIMITS
SUBTOTAL			19,082	-	-	4,059	
TOTAL			49,562	-	-	10,529	

EROSION CONTROL QUANTITIES
ECQ-1

STATE OF CALIFORNIA - DEPARTMENT OF TRANSPORTATION
Caltrans® WATER QUALITY

SENIOR LANDSCAPE ARCHITECT: DAVID W. YAM
CALCULATED-DESIGNED BY: ALEX MCDONALD
CHECKED BY: CHRIS PADICK
REVISED BY: AKM
DATE REVISED: 3/27/15

LAST REVISION: DATE PLOTTED => 12-AUG-2015
03-30-15 TIME PLOTTED => 09:11

Dist	COUNTY	ROUTE	POST MILES TOTAL PROJECT	SHEET No.	TOTAL SHEETS
04	Ala	580, 680	Var	68	143

REGISTERED ELECTRICAL ENGINEER — DATE 2/4/15

3-30-15
PLANS APPROVAL DATE

REGISTERED PROFESSIONAL ENGINEER — Mahmood Noii — No. 13717 — Exp. 6-30-15 — ELECTRICAL — STATE OF CALIFORNIA

THE STATE OF CALIFORNIA OR ITS OFFICERS OR AGENTS SHALL NOT BE RESPONSIBLE FOR THE ACCURACY OR COMPLETENESS OF SCANNED COPIES OF THIS PLAN SHEET.

NOTE:

FOR ACCURATE RIGHT OF WAY DATA, CONTACT RIGHT OF WAY ENGINEERING AT THE DISTRICT OFFICE.

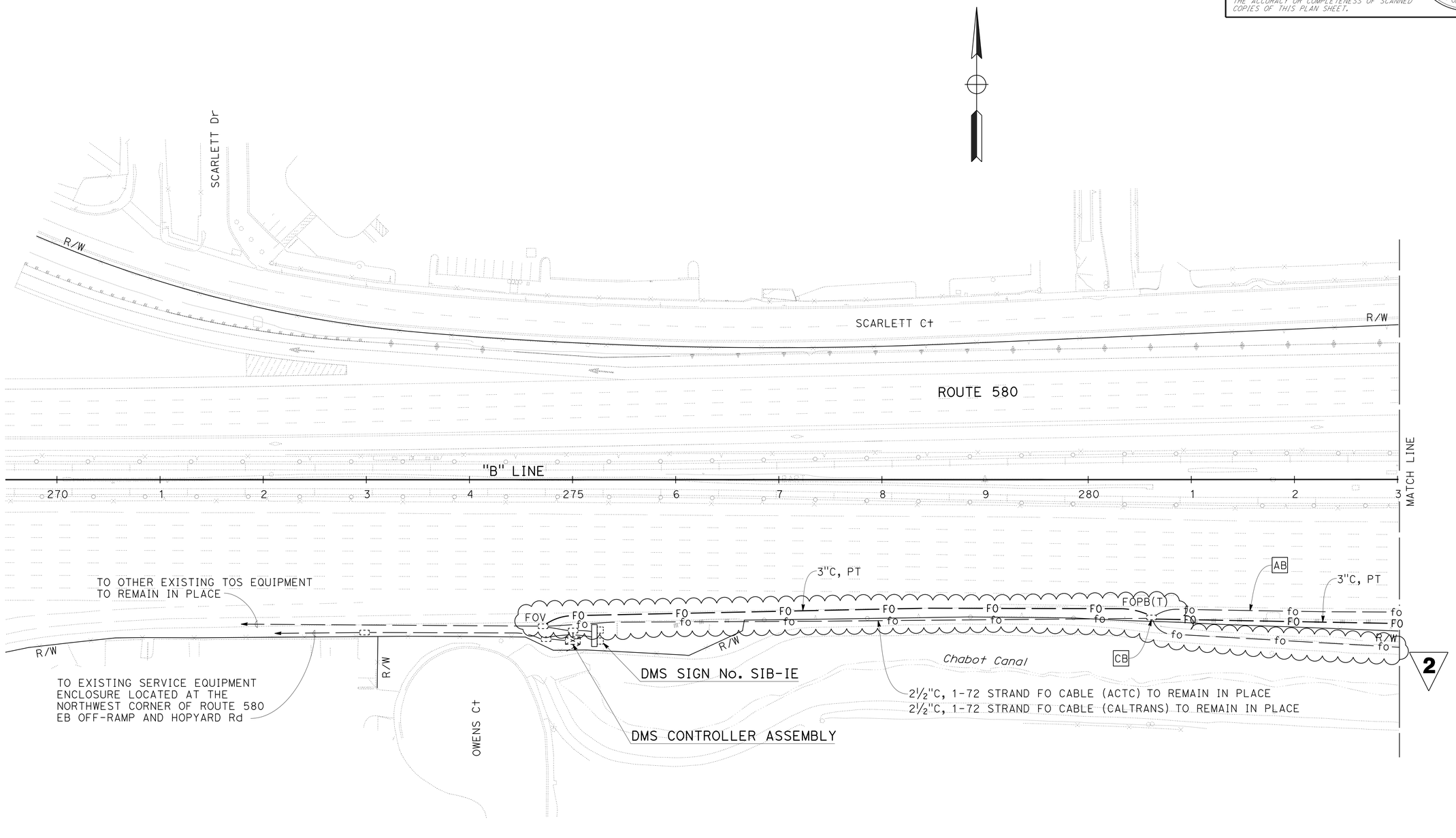

2 **REPLACED PER ADDENDUM No. 2 DATED AUGUST 13, 2015**

APPROVED FOR ELECTRICAL WORK ONLY

FOR NOTES, ABBREVIATIONS AND LEGEND SEE SHEET E-1

TRAFFIC OPERATIONS SYSTEM

SCALE: 1" = 50'

E-17

CALCULATED-DESIGNED BY	PAUL BAUTISTA	REVISED BY	MN
CHECKED BY	MAHMOOD NOII	DATE REVISED	2/4/15
FUNCTIONAL SUPERVISOR	BEHZAD GOLEMOHAMMADI		

STATE OF CALIFORNIA - DEPARTMENT OF TRANSPORTATION — Caltrans — ELECTRICAL

LAST REVISION 03-30-15 | DATE PLOTTED => 12-AUG-2015 | TIME PLOTTED => 09:11

Dist	COUNTY	ROUTE	POST MILES TOTAL PROJECT	SHEET No.	TOTAL SHEETS
04	Ala	580, 680	Var	69	143

REGISTERED ELECTRICAL ENGINEER — DATE 2/4/15

3-30-15
PLANS APPROVAL DATE

REGISTERED PROFESSIONAL ENGINEER — Mahmood Noii — No. 13717 — Exp. 6-30-15 — ELECTRICAL — STATE OF CALIFORNIA

THE STATE OF CALIFORNIA OR ITS OFFICERS OR AGENTS SHALL NOT BE RESPONSIBLE FOR THE ACCURACY OR COMPLETENESS OF SCANNED COPIES OF THIS PLAN SHEET.

NOTE:

FOR ACCURATE RIGHT OF WAY DATA, CONTACT RIGHT OF WAY ENGINEERING AT THE DISTRICT OFFICE.

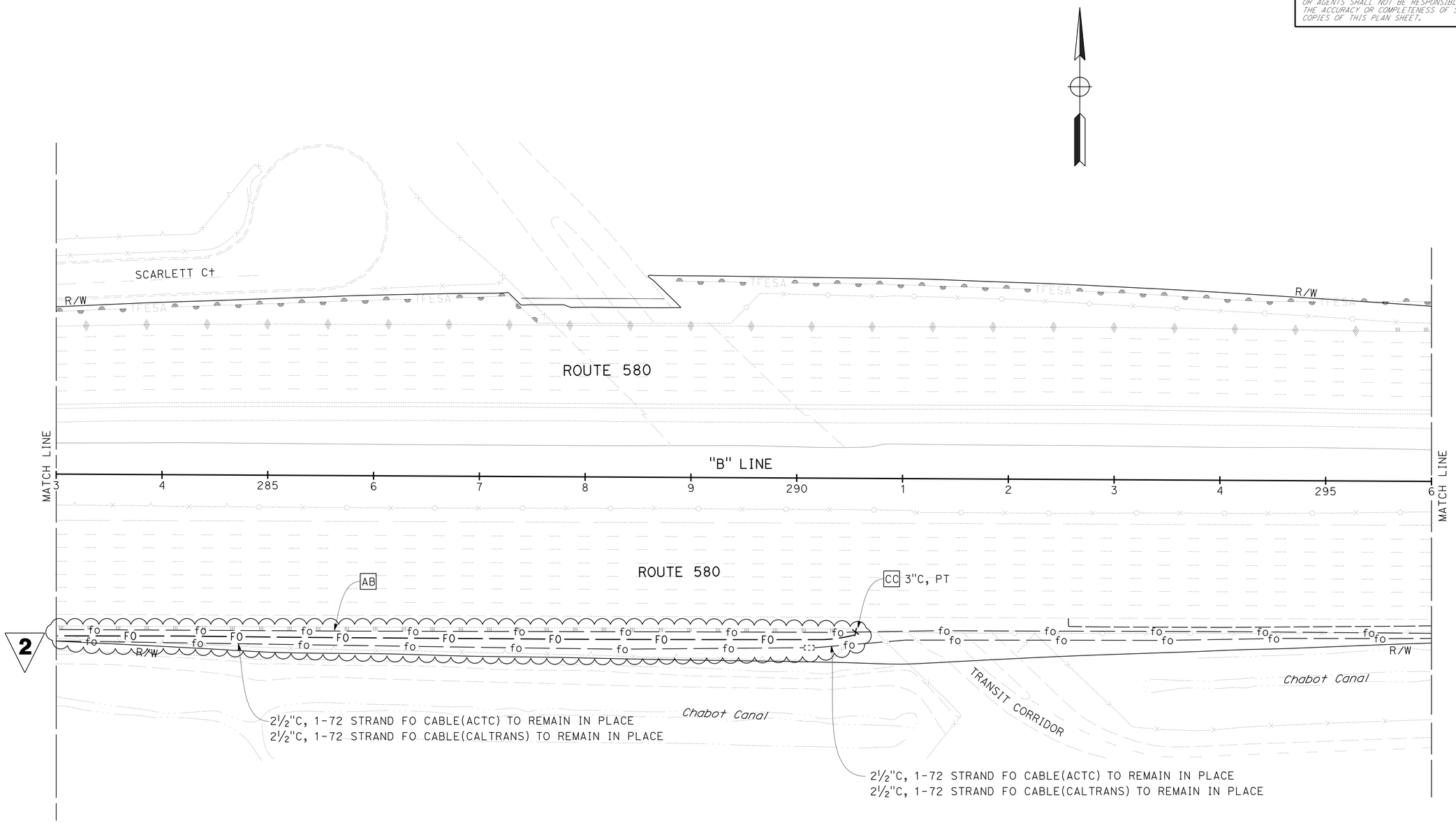

2 **REPLACED PER ADDENDUM No. 2 DATED AUGUST 13, 2015**

APPROVED FOR ELECTRICAL WORK ONLY

FOR NOTES, ABBREVIATIONS AND LEGEND SEE SHEET E-1

TRAFFIC OPERATIONS SYSTEM

SCALE: 1" = 50'

E-18

STATE OF CALIFORNIA - DEPARTMENT OF TRANSPORTATION
Caltrans®
ELECTRICAL

FUNCTIONAL SUPERVISOR: BEHZAD GOLEMOHAMMADI
CALCULATED-DESIGNED BY: PAUL BAUTISTA
CHECKED BY: MAHMOOD NOII
REVISED BY: MN
DATE REVISED: 2/4/15

LAST REVISION 03-30-15 | DATE PLOTTED => 12-AUG-2015 | TIME PLOTTED => 09:11

Dist	COUNTY	ROUTE	POST MILES TOTAL PROJECT	SHEET No.	TOTAL SHEETS
04	Ala	580, 680	Var	78	143

REGISTERED ELECTRICAL ENGINEER 2/4/15 DATE

3-30-15
PLANS APPROVAL DATE

REGISTERED PROFESSIONAL ENGINEER Mahmood Noii No. 13717 Exp. 6-30-15 ELECTRICAL STATE OF CALIFORNIA

THE STATE OF CALIFORNIA OR ITS OFFICERS OR AGENTS SHALL NOT BE RESPONSIBLE FOR THE ACCURACY OR COMPLETENESS OF SCANNED COPIES OF THIS PLAN SHEET.

LIGHTING

SHEET No.	ELECTROLIER	LED LUMINAIRE	PB	CONDUIT	CONDUCTORS
	EA			LF	
E-2			1	100	2200
E-3			1	100	800
E-4			1	150	1100
E-5			1	80	600
E-6			1	300	1200
E-7			1	100	1200
E-8			1	100	500
E-9			1	100	450
E-10	1	1	1	100	800
E-11			1	100	600
E-12	1	1	1	200	700

2

TRAFFIC OPERATIONS SYSTEM

SHEET No.	DETECTORS	PULL BOX	CONDUIT	CONDUCTORS/ CABLES
	EA		LF	
E-13		1	100	900
E-14		2	100	2300
E-15		1	150	7200
E-16		2	150	26500
E-17			250	
E-18			750	
E-20	4	1	100	1600
E-21		2	200	5000
E-22	10	2	200	3700

2 **REPLACED PER ADDENDUM No. 2 DATED AUGUST 13, 2015**

ELECTRICAL QUANTITIES

E-27

REVISED BY	MN
DATE REVISED	2/4/15
CALCULATED-DESIGNED BY	PAUL BAUTISTA
CHECKED BY	MAHMOOD NOII
FUNCTIONAL SUPERVISOR	BEHZAD GOLEMOHAMMADI

STATE OF CALIFORNIA - DEPARTMENT OF TRANSPORTATION
Caltrans
ELECTRICAL

LAST REVISION 03-30-15 | DATE PLOTTED => 12-AUG-2015 | TIME PLOTTED => 09:11

2 ADDED PER ADDENDUM No. 2 DATED AUGUST 13, 2015

Dist	COUNTY	ROUTE	POST MILES TOTAL PROJECT	SHEET No.	TOTAL SHEETS
04	Ala	580, 680	Var	106A	143

2

LICENSED LANDSCAPE ARCHITECT

July 19, 2013
PLANS APPROVAL DATE

Gregory A. Balzer 2516 — 02-28-15 Renewal Date — 7-19-13 Date — LICENSED LANDSCAPE ARCHITECT — STATE OF CALIFORNIA

THE STATE OF CALIFORNIA OR ITS OFFICERS OR AGENTS SHALL NOT BE RESPONSIBLE FOR THE ACCURACY OR COMPLETENESS OF SCANNED COPIES OF THIS PLAN SHEET.

TO ACCOMPANY PLANS DATED 3-30-15

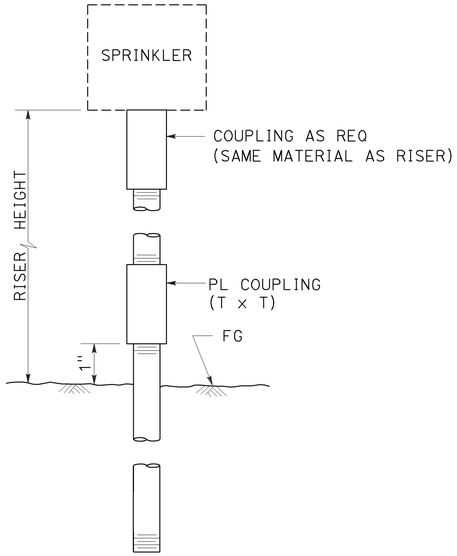

ELEVATION

RISER SPRINKLER ASSEMBLY TYPE I

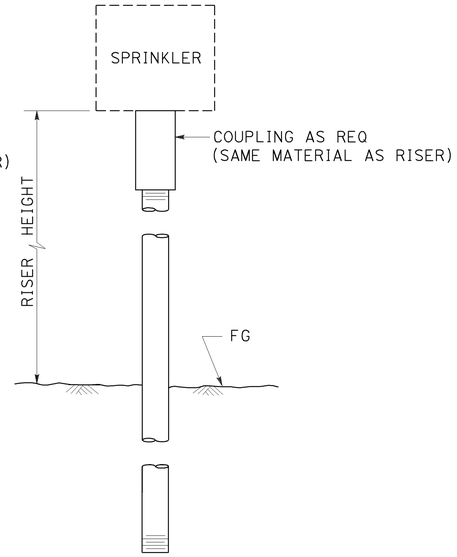

ELEVATION

RISER SPRINKLER ASSEMBLY TYPE II

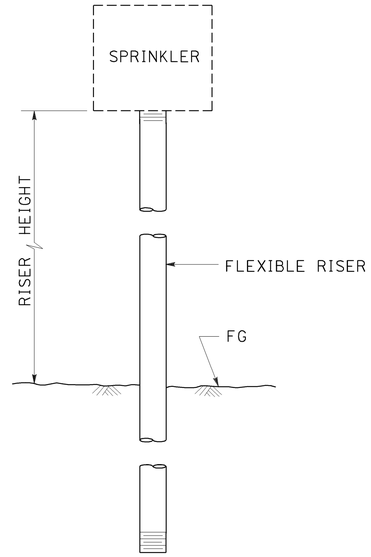

ELEVATION

RISER SPRINKLER ASSEMBLY TYPE III

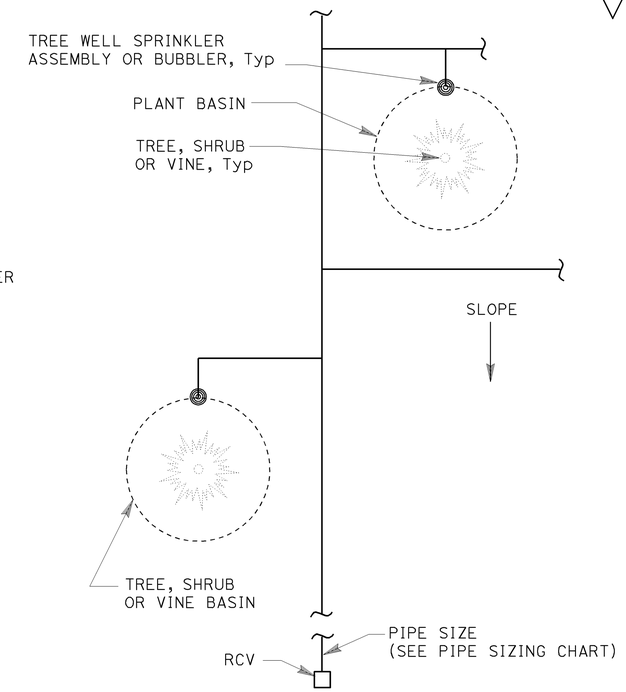

PLAN

NOTES:

1. Install tree well sprinkler assembly on up-hill side of plant when on slope.
2. Install bubbler within basin.

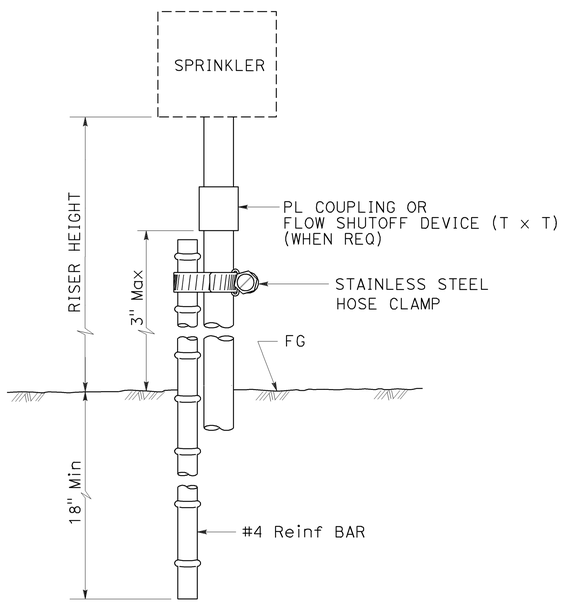

ELEVATION

RISER SPRINKLER ASSEMBLY TYPE IV

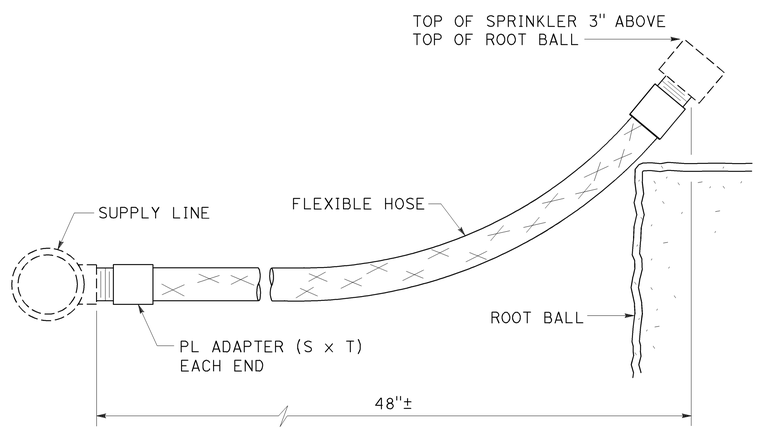

ELEVATION

RISER SPRINKLER ASSEMBLY TYPE V

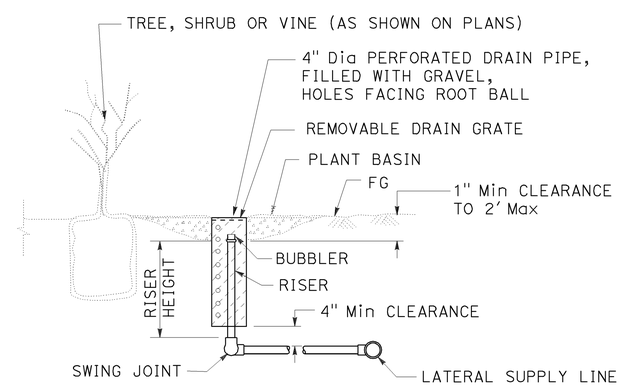

SECTION

TREE WELL SPRINKLER ASSEMBLY

STATE OF CALIFORNIA
DEPARTMENT OF TRANSPORTATION

LANDSCAPE DETAILS

NO SCALE

RSP H5 DATED JULY 19, 2013 SUPERSEDES STANDARD PLAN H5
DATED MAY 20, 2011 - PAGE 222 OF THE STANDARD PLANS BOOK DATED 2010.

REVISED STANDARD PLAN RSP H5

2010 REVISED STANDARD PLAN RSP H5

6-28-13

Dist	COUNTY	ROUTE	POST MILES TOTAL PROJECT	SHEET No.	TOTAL SHEETS
04	Ala	580, 680	Var	106B	143

2

LICENSED LANDSCAPE ARCHITECT

July 19, 2013
PLANS APPROVAL DATE

LICENSED LANDSCAPE ARCHITECT
Gregory A. Balzer 2576
No. 2576
Expiration Date 2-28-15
Renewal Date 7-19-13
Date
STATE OF CALIFORNIA

THE STATE OF CALIFORNIA OR ITS OFFICERS OR AGENTS SHALL NOT BE RESPONSIBLE FOR THE ACCURACY OR COMPLETENESS OF SCANNED COPIES OF THIS PLAN SHEET.

TO ACCOMPANY PLANS DATED 3-30-15

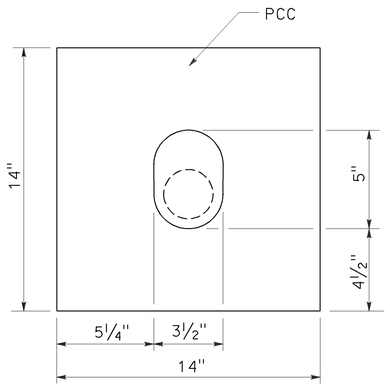

PLAN

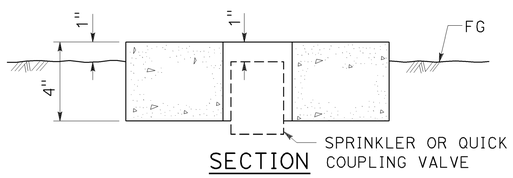

SECTION

SPRINKLER PROTECTOR TYPE I

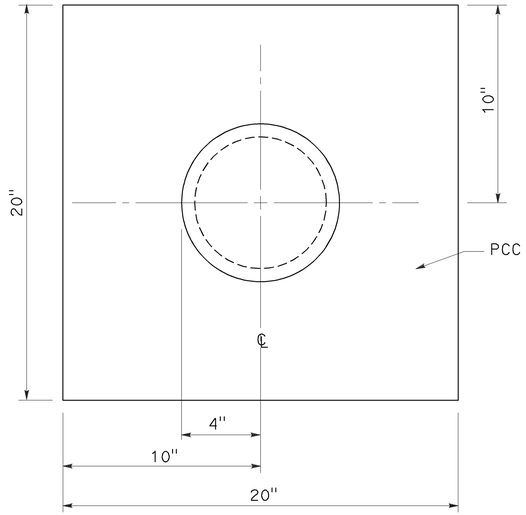

PLAN

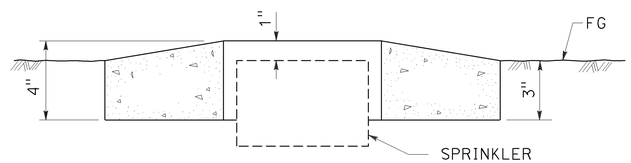

SECTION

SPRINKLER PROTECTOR TYPE II

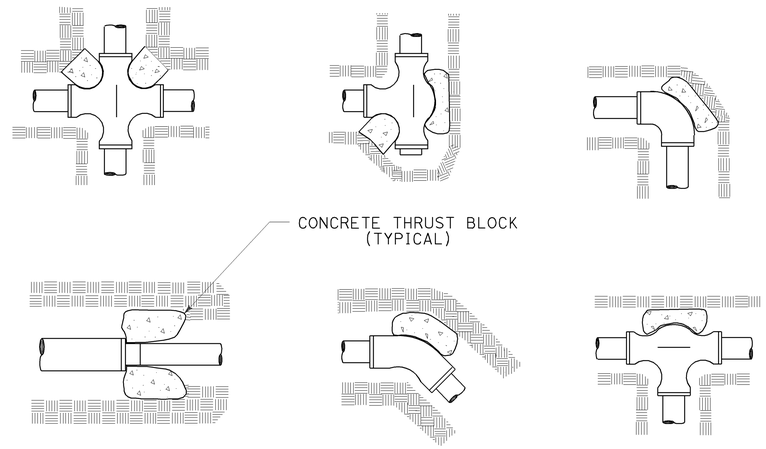

TYPICAL THRUST BLOCKS

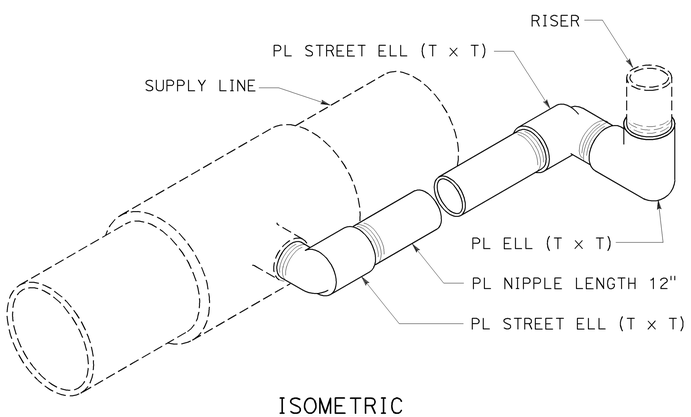

ISOMETRIC

POP-UP SPRINKLER ASSEMBLY TYPE I

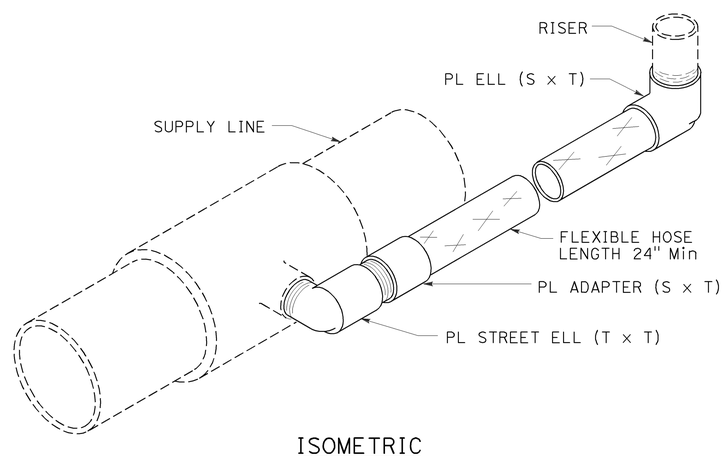

ISOMETRIC

POP-UP SPRINKLER ASSEMBLY TYPE II

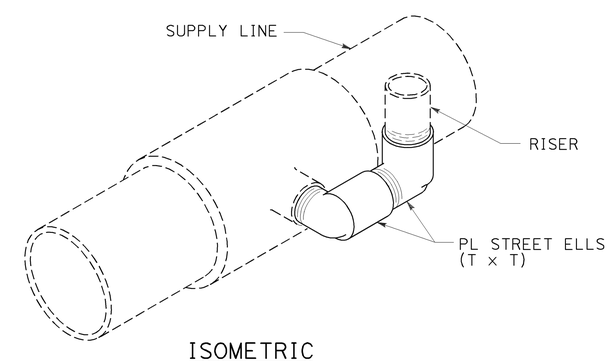

ISOMETRIC

POP-UP SPRINKLER ASSEMBLY TYPE III

STATE OF CALIFORNIA
DEPARTMENT OF TRANSPORTATION

LANDSCAPE DETAILS

NO SCALE

RSP H6 DATED JULY 19, 2013 SUPERSEDES STANDARD PLAN H6
DATED MAY 20, 2011 - PAGE 223 OF THE STANDARD PLANS BOOK DATED 2010.

2 **ADDED PER ADDENDUM No. 2 DATED AUGUST 13, 2015**

REVISED STANDARD PLAN RSP H6

2010 REVISED STANDARD PLAN RSP H6

6-28-13

Dist	COUNTY	ROUTE	POST MILES TOTAL PROJECT	SHEET No.	TOTAL SHEETS
04	Ala	580, 680	Var	106C	143

2

LICENSED LANDSCAPE ARCHITECT

July 19, 2013
PLANS APPROVAL DATE

THE STATE OF CALIFORNIA OR ITS OFFICERS OR AGENTS SHALL NOT BE RESPONSIBLE FOR THE ACCURACY OR COMPLETENESS OF SCANNED COPIES OF THIS PLAN SHEET.

LICENSED LANDSCAPE ARCHITECT
Gregory A. Balzer 2576
10 Expires
2-28-15
Renewal Date
7-19-13
Date
STATE OF CALIFORNIA

TO ACCOMPANY PLANS DATED 3-30-15

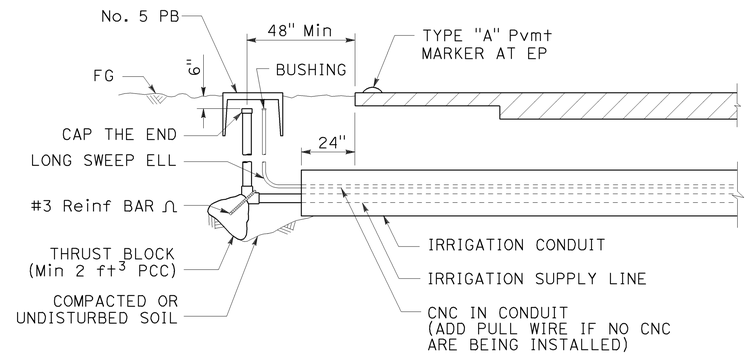

SECTION

IRRIGATION CONDUIT

UNDER TRAVELED WAY

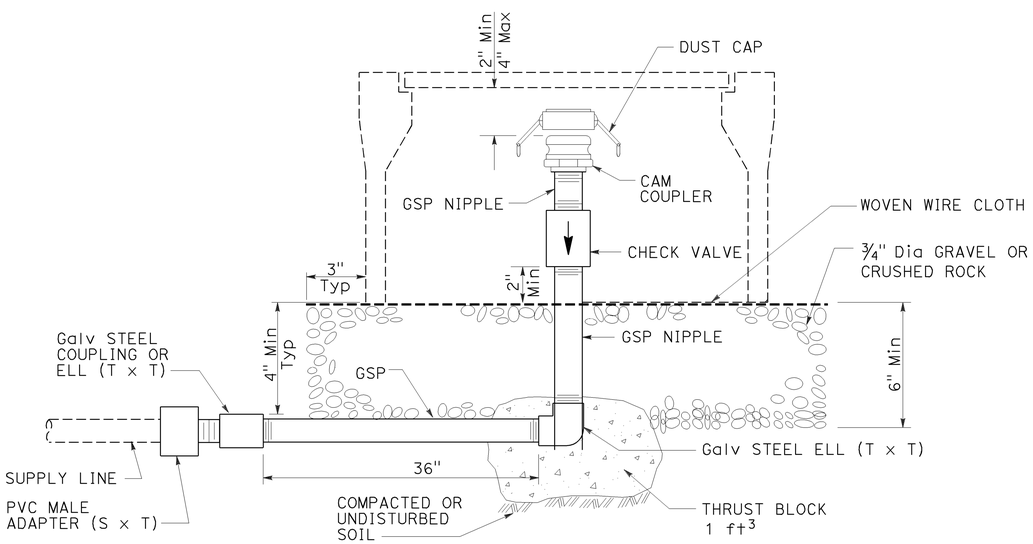

ELEVATION

CAM COUPLER ASSEMBLY

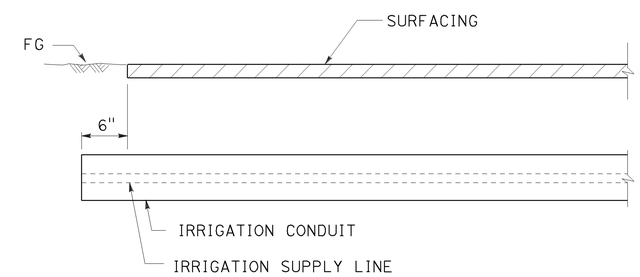

SECTION

IRRIGATION CONDUIT

UNDER SIDEWALKS, DRIVEWAYS AND PATHS

STATE OF CALIFORNIA
DEPARTMENT OF TRANSPORTATION

LANDSCAPE DETAILS

NO SCALE

RSP H9 DATED JULY 19, 2013 SUPERSEDES STANDARD PLAN H9
DATED MAY 20, 2011 - PAGE 226 OF THE STANDARD PLANS BOOK DATED 2010.

REVISED STANDARD PLAN RSP H9

2 **ADDED PER ADDENDUM No. 2 DATED AUGUST 13, 2015**

2010 REVISED STANDARD PLAN RSP H9

6-28-13

Dist	COUNTY	ROUTE	POST MILES TOTAL PROJECT	SHEET No.	TOTAL SHEETS
04	Ala	580, 680	Var	109A	143

Theresa Gabriel
REGISTERED ELECTRICAL ENGINEER

July 19, 2013
PLANS APPROVAL DATE

REGISTERED PROFESSIONAL ENGINEER Theresa Aziz Gabriel No. E15129 Exp. 6-30-14 ELECTRICAL STATE OF CALIFORNIA

THE STATE OF CALIFORNIA OR ITS OFFICERS OR AGENTS SHALL NOT BE RESPONSIBLE FOR THE ACCURACY OR COMPLETENESS OF SCANNED COPIES OF THIS PLAN SHEET.

TO ACCOMPANY PLANS DATED 3-30-15

2010 REVISED STANDARD PLAN RSP ES-1A

LEGEND:

AB	ABANDON. IF APPLIED TO CONDUIT, REMOVE CONDUCTORS
BC	INSTALL PULL BOX IN EXISTING CONDUIT RUN
BP	PEDESTRIAN BARRICADE, TYPE AS INDICATED ON PLAN
CB	INSTALL CONDUIT INTO EXISTING PULL BOX
CC	CONNECT NEW AND EXISTING CONDUIT. REMOVE EXISTING CONDUCTORS AND INSTALL CONDUCTORS AS INDICATED
CF	CONDUIT TO REMAIN FOR FUTURE USE. REMOVE CONDUCTORS. INSTALL PULL TAPE
DH	DETECTOR HANDHOLE
FA	FOUNDATION TO BE ABANDONED
IS	INSTALL SIGN ON SIGNAL MAST ARM
NS	NO SLIP BASE ON STANDARD
PEC	PHOTOELECTRIC CONTROL
PEU	PHOTOELECTRIC UNIT
RC	EQUIPMENT OR MATERIAL TO BE REMOVED AND BECOME THE PROPERTY OF THE CONTRACTOR
RE	REMOVE ELECTROLIER, FUSES AND BALLAST. TAPE ENDS OF CONDUCTORS
RL	RELOCATE EQUIPMENT
RR	REMOVE AND REUSE EQUIPMENT
RS	REMOVE AND SALVAGE EQUIPMENT
SC	SPLICE NEW TO EXISTING CONDUCTORS
SD	SERVICE DISCONNECT
TSP	TELEPHONE SERVICE POINT

ABBREVIATIONS

APS	ACCESSIBLE PEDESTRIAN SIGNAL
BBS	BATTERY BACKUP SYSTEM
BC	BOLT CIRCLE
BPB	BICYCLE PUSH BUTTON
C	CONDUIT
CB	CIRCUIT BREAKER
CCTV	CLOSED CIRCUIT TELEVISION
Ckt	CIRCUIT
CMS	CHANGEABLE MESSAGE SIGN
Ctid	CALTRANS IDENTIFICATION
Comm	COMMUNICATION
DLC	LOOP DETECTOR LEAD-IN CABLE
EMS	EXTINGUISHABLE MESSAGE SIGN
EVUC	EMERGENCY VEHICLE UNIT CABLE
EVUD	EMERGENCY VEHICLE UNIT DETECTOR
FB	FLASHING BEACON
FBCA	FLASHING BEACON CONTROL ASSEMBLY
FBS	FLASHING BEACON WITH SLIP BASE
FO	FIBER OPTIC
G	EQUIPMENT GROUNDING CONDUCTOR
GB	GROUND BUS
GFCI	GROUND FAULT CIRCUIT INTERRUPTER
HAR	HIGHWAY ADVISORY RADIO
Hex	HEXAGONAL
HPS	HIGH PRESSURE SODIUM
IISNS	INTERNALLY ILLUMINATED STREET NAME SIGN
ISL	INDUCTION SIGN LIGHTING
LED	LIGHT EMITTING DIODE
LMA	LUMINAIRE MAST ARM
LPS	LOW PRESSURE SODIUM
Ltg	LIGHTING
Lum	LUMINAIRE
M	METERED
MAT	MAST ARM MOUNTING TOP ATTACHMENT
MAS	MAST ARM MOUNTING SIDE ATTACHMENT
M/M	MULTIPLE TO MULTIPLE TRANSFORMER
Mtg	MOUNTING
MV	MERCURY VAPOR LIGHTING FIXTURE
MVDS	MICROWAVE VEHICLE DETECTION SYSTEM
N	NEUTRAL (GROUNDED CONDUCTOR)
NB	NEUTRAL BUS
NC	NORMALLY CLOSE
NO	NORMALLY OPEN
P	CIRCUIT BREAKER'S POLE
PB	PULL BOX
PBA	PUSH BUTTON ASSEMBLY
PEC	PHOTOELECTRIC CONTROL
Ped	PEDESTRIAN
PEU	PHOTOELECTRIC UNIT
PT	CONDUIT WITH PULL TAPE
RE	RELOCATED EQUIPMENT
RM	RAMP METERING
RWIS	ROADSIDE WEATHER INFORMATION SYSTEM
SB	SLIP BASE
SIC	SIGNAL INTERCONNECT CABLE
Sig	SIGNAL
SMA	SIGNAL MAST ARM
SNS	STREET NAME SIGN
SP	SERVICE POINT
TDC	TELEPHONE DEMARCATION CABINET
TMS	TRAFFIC MONITORING STATION
TOS	TRAFFIC OPERATIONS SYSTEM
Veh	VEHICLE
VIVDS	VIDEO IMAGE VEHICLE DETECTION SYSTEM
WIM	WEIGH-IN-MOTION
Xfmr	TRANSFORMER

SOFFIT AND WALL MOUNTED LUMINAIRES

PENDANT, 70 W HPS UNLESS OTHERWISE SPECIFIED

FLUSH, 70 W HPS UNLESS OTHERWISE SPECIFIED

WALL SURFACE, 70 W HPS UNLESS OTHERWISE SPECIFIED

EXISTING SOFFIT OR WALL LUMINAIRE TO REMAIN UNMODIFIED

EXISTING SOFFIT OR WALL LUMINAIRE TO BE MODIFIED AS SPECIFIED

NOTE:
Arrow indicates "street side" of luminaire.

COMMONLY USED SYMBOLS FOR UNITED STATES CUSTOMARY UNITS OF MEASUREMENT:

SYMBOL USED	DEFINITIONS
Ω	OHMS
min	MINUTE
s	SECOND
bps	BITS PER SECOND
Bps	BYTES PER SECOND
A	AMPERE
V	VOLT
V(dc)	VOLT (DIRECT CURRENT)
V(ac)	VOLT (ALTERNATING CURRENT)
FC	FOOT - CANDLE
W	WATTS
VA	VOLT-AMPERE
M	MEGA
k	KILO
m	MILLI
μ	MICRO
P	PICO
Hz	HERTZ

MISCELLANEOUS ELECTROLIERS

NEW	EXISTING	
		LUMINAIRE ON WOOD POLE
		NON-STANDARD ELECTROLIER (SEE PROJECT NOTES OR PROJECT PLANS)
		CITY ELECTROLIER
		ELECTROLIER FOUNDATION (FUTURE INSTALLATION)

NOTES:

1. HPS luminaires shall be 310 W HPS when installed on Type 21, 21D, 30, 31 and 32 Standards, unless otherwise specified. HPS luminaires shall be 200 W when installed on other type standards or poles, unless otherwise specified.
2. LED luminaires shall be 235 W when installed on Type 21, 21D, 30, 31 and 32 Standards, unless otherwise specified. LED luminaires shall be 165 W when installed on other type standards or poles, unless otherwise specified.
3. Luminaires shall be the cutoff type, ANSI Type III medium cutoff lighting distribution, unless otherwise specified.

STANDARD ELECTROLIER

NEW	EXISTING	STANDARD TYPE
		15
		15D
		15 STRUCTURE
		15D STRUCTURE
		21
		21D
		21 STRUCTURE
		21D STRUCTURE
		30
		31
		32

STATE OF CALIFORNIA
DEPARTMENT OF TRANSPORTATION

ELECTRICAL SYSTEMS (LEGEND AND ABBREVIATIONS)

NO SCALE

RSP ES-1A DATED JULY 19, 2013 SUPERSEDES STANDARD PLAN ES-1A DATED MAY 20, 2011 - PAGE 425 OF THE STANDARD PLANS BOOK DATED 2010.

REVISED STANDARD PLAN RSP ES-1A

2 **ADDED PER ADDENDUM No. 2 DATED AUGUST 13, 2015**

7-15-13

Dist	COUNTY	ROUTE	POST MILES TOTAL PROJECT	SHEET No.	TOTAL SHEETS
04	Ala	580, 680	Var	109B	143

2

Theresa Gabriel
REGISTERED ELECTRICAL ENGINEER

July 19, 2013
PLANS APPROVAL DATE

REGISTERED PROFESSIONAL ENGINEER
Theresa Aziz Gabriel
No. E15129
Exp. 6-30-14
ELECTRICAL
STATE OF CALIFORNIA

THE STATE OF CALIFORNIA OR ITS OFFICERS OR AGENTS SHALL NOT BE RESPONSIBLE FOR THE ACCURACY OR COMPLETENESS OF SCANNED COPIES OF THIS PLAN SHEET.

TO ACCOMPANY PLANS DATED 3-30-15

CONDUIT

NEW	EXISTING	
		LIGHTING CONDUIT, UNLESS OTHERWISE INDICATED OR NOTED
		TRAFFIC SIGNAL CONDUIT
C	c	COMMUNICATION CONDUIT
T	t	TELEPHONE CONDUIT
F	f	FIRE ALARM CONDUIT
FO	fo	FIBER OPTIC CONDUIT
		CONDUIT TERMINATION
R	r	CONDUIT RISER ATTACHED TO THE STRUCTURE OR SERVICE POLE

SERVICE EQUIPMENT

NEW	EXISTING	
OH	oh	OVERHEAD LINES
U	U	WOOD POLE, "U" INDICATES UTILITY OWNED
		POLE GUY WITH ANCHOR
		UTILITY TRANSFORMER - GROUND MOUNTED
III	III	SERVICE EQUIPMENT ENCLOSURE TYPE. DOOR INDICATES FRONT OF ENCLOSURE
T	t	TELEPHONE DEMARCATION CABINET

POLE-MOUNTED SERVICE DESIGNATION

TYPE H SERVICE, 28'-10" — TYPE OF INSTALLATION AND POLE HEIGHT ABOVE GRADE

FLASHING BEACON

NEW	EXISTING	
R	R	FLASHING BEACON (ONE VEHICLE SIGNAL HEAD WITH BACKPLATE AND VISOR) "R" INDICATES RED INDICATION, "Y" INDICATES YELLOW INDICATION
Y Y	Y Y	FLASHING BEACON WITH TYPE 15-FBS STANDARD AND A SIGN.
R R	R R	FLASHING BEACON WITH TYPES 9, 9A OR 9B SIGN UNLESS OTHERWISE SPECIFIED OR INDICATED

SIGNAL EQUIPMENT

NEW	EXISTING	
C	C	PEDESTRIAN SIGNAL HEAD "C" INDICATES COUNTDOWN PEDESTRIAN HEAD
		PUSH BUTTON ASSEMBLY POST
		PEDESTRIAN BARRICADE
		VEHICLE SIGNAL HEAD (WITH BACKPLATE AND 3-SECTIONS: RED, YELLOW AND GREEN)
		VEHICLE SIGNAL HEAD WITH ANGLE VISOR
PV	PV	MODIFICATIONS OF BASIC SYMBOL: "L" INDICATES ALL NON-ARROW SECTIONS LOUVERED "LG" INDICATES LOUVERED GREEN SECTION ONLY "PV" INDICATES ALL 12" SECTIONS PROGRAMMED VISIBILITY "8" INDICATES ALL 8" SECTIONS (ONLY WHEN SPECIFIED)
		VEHICLE SIGNAL HEAD CONSISTING OF RED, YELLOW AND GREEN LEFT ARROW SECTIONS
		VEHICLE SIGNAL HEAD CONSISTING OF RED AND YELLOW SECTIONS WITH AN UP GREEN ARROW SECTION
		VEHICLE SIGNAL HEAD (5 SECTION) CONSISTING OF RED, YELLOW AND GREEN SECTIONS WITH YELLOW AND GREEN RIGHT ARROW SECTIONS
		TYPE 15TS STANDARD WITH VEHICLE SIGNAL HEAD AND LUMINAIRE
		TYPE 21TS STANDARD WITH VEHICLE SIGNAL HEAD AND LUMINAIRE
		STANDARD WITH LUMINAIRE AND SIGNAL MAST ARMS AND ATTACHED VEHICLE SIGNAL HEADS
		TYPE 1 STANDARD WITH ATTACHED VEHICLE SIGNAL HEADS
		STANDARD WITH A SIGNAL MAST ARM, ATTACHED VEHICLE SIGNAL HEADS AND INTERNALLY ILLUMINATED STREET NAME SIGN
		CONTROLLER ASSEMBLY. DOOR INDICATES FRONT OF CABINET

2 **ADDED PER ADDENDUM No. 2 DATED AUGUST 13, 2015**

SIGNAL EQUIPMENT Cont

NEW	EXISTING	
		GUARD POST
		TYPE 1 STANDARD WITH RAMP METERING SIGN
		OPTICAL DETECTOR FOR THE EMERGENCY VEHICLE DETECTION SYSTEM

NOTES:

1. All signal sections shall be 12" unless shown otherwise.
2. Signal heads shall be provided with backplates unless shown otherwise.

ILLUMINATED OVERHEAD SIGN

NEW	EXISTING	
		SINGLE POST, SINGLE ILLUMINATED SIGN, BALANCED BUTTERFLY
		SINGLE POST, DOUBLE ILLUMINATED SIGN, BALANCED BUTTERFLY
		SINGLE POST, SINGLE ILLUMINATED SIGN, FULL CANTILEVER
		DOUBLE POST, SINGLE ILLUMINATED SIGN
		SINGLE ILLUMINATED SIGN MOUNTED ON STRUCTURE
		DOUBLE POST, SINGLE ILLUMINATED SIGN WITH ELECTROLIER

STATE OF CALIFORNIA
DEPARTMENT OF TRANSPORTATION

ELECTRICAL SYSTEMS (LEGEND AND ABBREVIATIONS)

NO SCALE

RSP ES-1B DATED JULY 19, 2013 SUPERSEDES STANDARD PLAN ES-1B DATED MAY 20, 2011 - PAGE 426 OF THE STANDARD PLANS BOOK DATED 2010.

REVISED STANDARD PLAN RSP ES-1B

2010 REVISED STANDARD PLAN RSP ES-1B

7-15-13

Dist	COUNTY	ROUTE	POST MILES TOTAL PROJECT	SHEET No.	TOTAL SHEETS
04	Ala	580, 680	Var	109C	143

Theresa Gabriel
REGISTERED ELECTRICAL ENGINEER

July 19, 2013
PLANS APPROVAL DATE

REGISTERED PROFESSIONAL ENGINEER Theresa Aziz Gabriel No. E15129 Exp. 6-30-14 ELECTRICAL STATE OF CALIFORNIA

THE STATE OF CALIFORNIA OR ITS OFFICERS OR AGENTS SHALL NOT BE RESPONSIBLE FOR THE ACCURACY OR COMPLETENESS OF SCANNED COPIES OF THIS PLAN SHEET.

TO ACCOMPANY PLANS DATED 3-30-15

2

EQUIPMENT IDENTIFICATION

ILLUMINATED SIGN IDENTIFICATION NUMBER:

SIGN No. 12345

10 ISL SCI 1.0

- SIGN NUMBER - PLACE ON POST OR STRUCTURE
- TRANSFORMER RATING (kVA)
- LIGHTING CONTROL TYPE
- NUMBER AND TYPE OF FIXTURES

DO NOT PLACE ON STANDARD OR STRUCTURE

ELECTROLIER OR EQUIPMENT IDENTIFICATION NUMBER:

12345 - 15'-0"

- MAST ARM LENGTH, IF SHOWN. DO NOT PLACE ON STANDARD OR STRUCTURE
- EQUIPMENT NUMBER - PLACE ON STANDARD OR STRUCTURE. EXISTING EQUIPMENT NUMBERS ARE SHOWN IN PARENTHESIS

CONDUIT AND CONDUCTOR IDENTIFICATION:

1½"C, 2#10, 15#14, 2 DLC, 12P#18

- PAIR
- NUMBER AND SIZE OF CONDUCTORS AND CABLES
- SIZE OF CONDUIT IN INCHES

ø1, ø2, ø2P, etc.	TRAFFIC PHASE IDENTIFICATION FOR SIGNAL FACES, DETECTORS AND PHASE DIAGRAMS
1 2 3	LEGEND NUMBERS
A B C	EQUIPMENT, SIGNAL POLES, INSTALLATION OR ITEMS
1 2 3	CONDUIT RUN NUMBERS

SIGNAL AND LIGHTING STANDARD (TYPICAL DESIGNATION):

19A - 3 - 100

- WIND VELOCITY = 100 mph
- CASE 3 ARM LOADING
- STANDARD TYPE
- STANDARD PLAN SHEET NUMBER
- DETAIL, NUMBER, SECTION, TYPE OR ELEVATION

MISCELLANEOUS EQUIPMENT

NEW	EXISTING	
CMS	cms	CHANGEABLE MESSAGE SIGN
		CLOSED CIRCUIT TELEVISION CAMERA
		HIGHWAY ADVISORY RADIO POLE AND ANTENNA
EMS	ems	EXTINGUISHABLE MESSAGE SIGN
M V	m v	DETECTION DEVICE M = MICROWAVE SENSOR V = VIDEO IMAGE SENSOR

WIRING DIAGRAM LEGEND

----	EXTERNAL CONDUCTOR
	CONDUCTOR OR BUS
	TIE POINT
	CONTACTOR COIL
	CONTACTOR, NO CONTACT
	TERMINAL BLOCKS
	CONTACTOR, NC CONTACT
	ENCLOSURE BOND
	GROUNDING ELECTRODE
	CIRCUIT BREAKER
	RECEPTACLE

PULL BOXES

NEW	EXISTING	
		PULL BOX, No. 5 UNLESS OTHERWISE INDICATED OR NOTED
3	9A(21)	PULL BOX, ADDITIONAL DESIGNATIONS OR DESCRIPTIONS

3 No. 3½ PULL BOX
5 No. 5 PULL BOX
6 No. 6 PULL BOX
7 No. 7 (CEILING PULL BOX)
8 No. 8 (PENDANT SOFFIT PULL BOX)
9 No. 9 PULL BOX
9A No. 9A PULL BOX

(C) COMMUNICATIONS PULL BOX
(E) PULL BOX WITH EXTENSION
(S) SPRINKLER CONTROL PULL BOX
(21) ANCHOR BOLTS AND CONDUIT FOR FUTURE INSTALLATION OF TYPE 21 STANDARD
(T) TRAFFIC PULL BOX

VEHICLE DETECTORS

5 J 9 U

- VEHICLE DETECTOR DESIGNATION
- U = UPPER
  L = LOWER
- SLOT NUMBER IN INPUT FILE
- INPUT FILE (I OR J)
- PHASE

NEW	EXISTING	
		TYPE A DETECTOR LOOP. OUTLINE OF SAWCUT SHOWN
		TYPE B DETECTOR LOOP. OUTLINE OF SAWCUT SHOWN
		TYPE C DETECTOR LOOP. OUTLINE OF SAWCUT SHOWN
		TYPE D DETECTOR LOOP. OUTLINE OF SAWCUT SHOWN
		TYPE E DETECTOR LOOP. OUTLINE OF SAWCUT SHOWN
		TYPE Q DETECTOR LOOP. OUTLINE OF SAWCUT SHOWN
		MAGNETIC DETECTOR
DH	dh	DETECTOR HANDHOLE
		MICROWAVE OR VIDEO DETECTION ZONE

STATE OF CALIFORNIA
DEPARTMENT OF TRANSPORTATION

ELECTRICAL SYSTEMS (LEGEND AND ABBREVIATIONS)

NO SCALE

RSP ES-1C DATED JULY 19, 2013 SUPERSEDES STANDARD PLAN ES-1C DATED MAY 20, 2011 - PAGE 427 OF THE STANDARD PLANS BOOK DATED 2010.

REVISED STANDARD PLAN RSP ES-1C

2 **ADDED PER ADDENDUM No. 2 DATED AUGUST 13, 2015**

2010 REVISED STANDARD PLAN RSP ES-1C

7-11-13

Dist	COUNTY	ROUTE	POST MILES TOTAL PROJECT	SHEET No.	TOTAL SHEETS
04	Ala	580, 680	Var	110A	143

Theresa Gabriel
REGISTERED ELECTRICAL ENGINEER

July 19, 2013
PLANS APPROVAL DATE

REGISTERED PROFESSIONAL ENGINEER Theresa Aziz Gabriel No. E15129 Exp. 6-30-14 ELECTRICAL STATE OF CALIFORNIA

THE STATE OF CALIFORNIA OR ITS OFFICERS OR AGENTS SHALL NOT BE RESPONSIBLE FOR THE ACCURACY OR COMPLETENESS OF SCANNED COPIES OF THIS PLAN SHEET.

TO ACCOMPANY PLANS DATED 3-30-15

2

2 ADDED PER ADDENDUM No. 2 DATED AUGUST 13, 2015

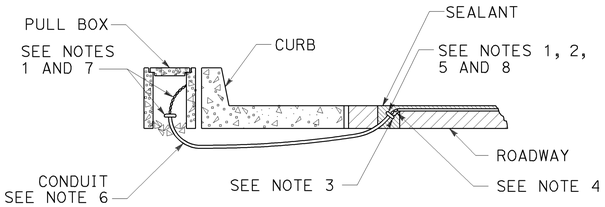

TYPE A
CURB TERMINATION DETAIL

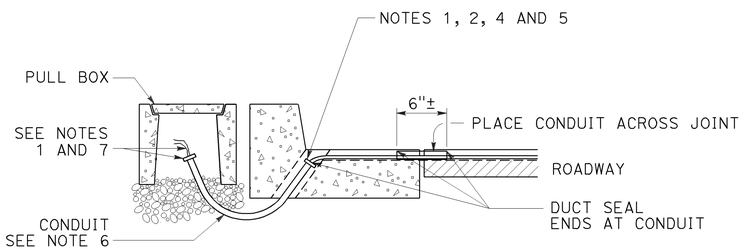

CROSS SECTION

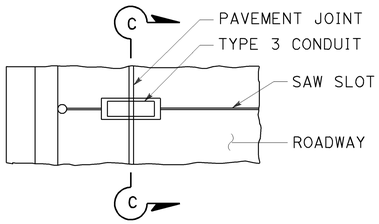

PLAN VIEW

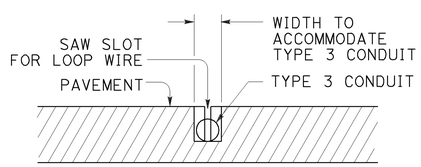

SECTION C-C

TYPE B
CURB TERMINATION DETAIL

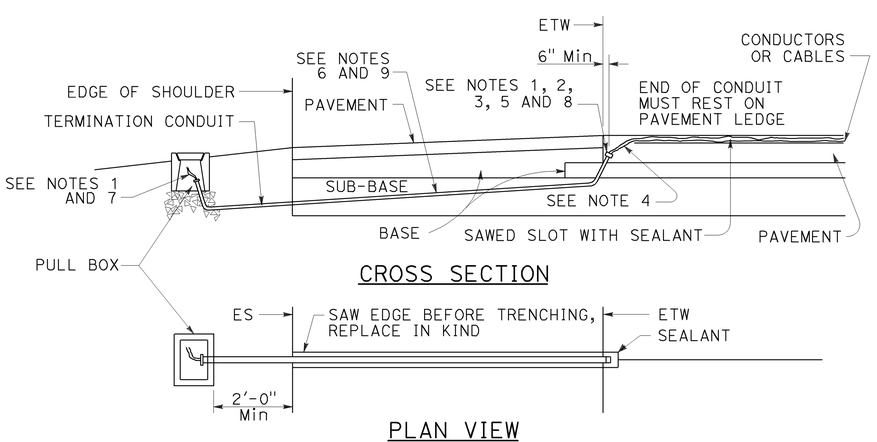

CROSS SECTION

PLAN VIEW

SHOULDER TERMINATION DETAILS

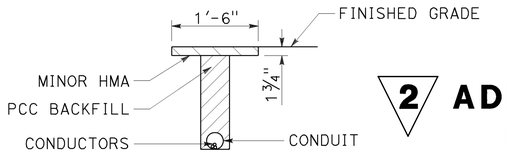

"T" TRENCH
DETAIL T

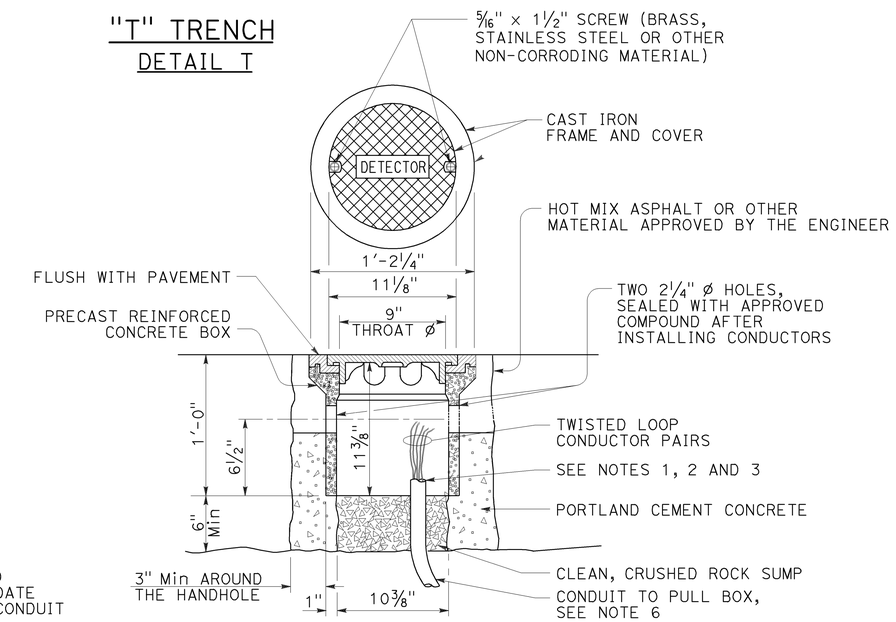

DETECTOR HANDHOLE DETAIL

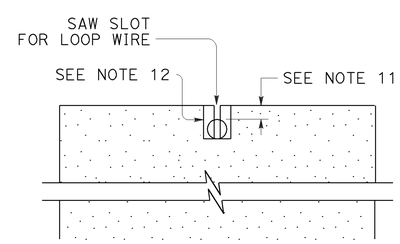

SECTION A-A

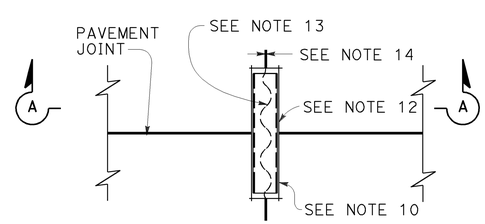

PLAN VIEW

TYPICAL LOOP LEAD-IN DETAIL
AT PAVEMENT JOINT

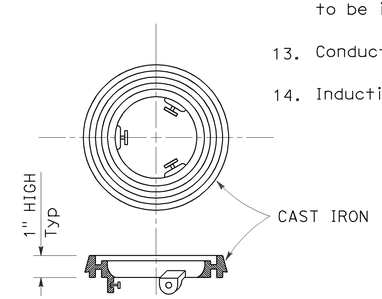

LOCKING GRADE RING

NOTES:

1. Bushing shall be used at end of conduit.
2. Tape detector conductors or cables 3" each side of bushings.
3. Install duct seal compound to each end of termination conduit before installing sealant.
4. Round all sharp edges where detector conductors or cables have to pass.
5. End of conduit shall be 3⅛" below roadway surface.
6. Conduit size / Loop conductors
   - 1"C minimum — 1 to 2 pairs
   - 1½"C minimum — 3 to 4 pairs
   - 2"C minimum — 5 or more pairs
7. Splice detector conductors or cables to detector lead-in-cable.
8. Location of detector handhole when shown on plans.
9. When the shoulder and traveled way are paved with the same material and there is no joint between them, the conduit shall extend only 2'-0" into the shoulder pavement.
10. ¾"C, Type 3 conduit 6" long minimum, plug both ends with duct compound to keep out sealant.
11. ½" Minimum between top of conduit and pavement surface.
12. Sawcut shall not exceed 1" in width and ⅛" longer than conduit to be installed.
13. Conductors with ½" minimum slack inside conduit.
14. Inductive loop detector saw slot.

STATE OF CALIFORNIA
DEPARTMENT OF TRANSPORTATION

ELECTRICAL SYSTEMS (CURB TERMINATION AND HANDHOLE)

NO SCALE

RSP ES-5D DATED JULY 19, 2013 SUPERSEDES STANDARD PLAN ES-5D DATED MAY 20, 2011 - PAGE 451 OF THE STANDARD PLANS BOOK DATED 2010.

REVISED STANDARD PLAN RSP ES-5D

2010 REVISED STANDARD PLAN RSP ES-5D

7-9-13

DIST	COUNTY	ROUTE	POST MILES TOTAL PROJECT	SHEET NO.	TOTAL SHEETS
04	Ala	580, 680	Var	110B	143

Theresa Gabriel
REGISTERED ELECTRICAL ENGINEER

July 19, 2013
PLANS APPROVAL DATE

REGISTERED PROFESSIONAL ENGINEER Theresa Aziz Gabriel No. E15129 Exp. 6-30-14 ELECTRICAL STATE OF CALIFORNIA

THE STATE OF CALIFORNIA OR ITS OFFICERS OR AGENTS SHALL NOT BE RESPONSIBLE FOR THE ACCURACY OR COMPLETENESS OF SCANNED COPIES OF THIS PLAN SHEET.

TO ACCOMPANY PLANS DATED 3-30-15

2

2 **ADDED PER ADDENDUM No. 2 DATED AUGUST 13, 2015**

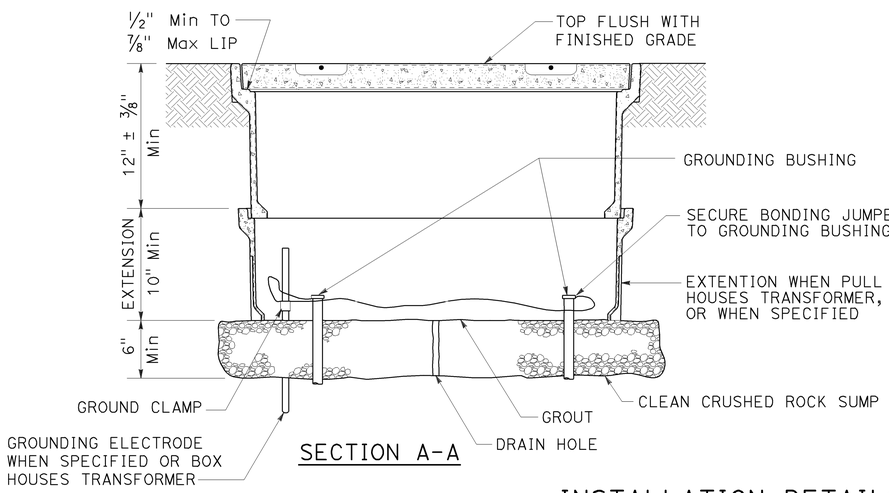

SECTION A-A

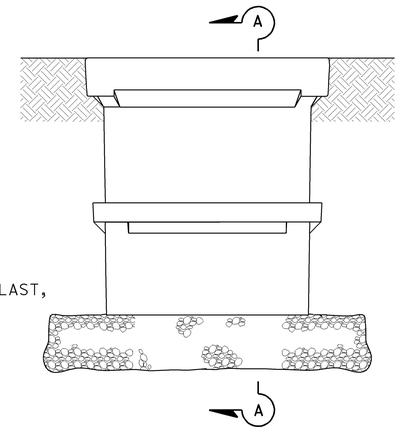

SIDE VIEW

INSTALLATION DETAILS

DETAIL A

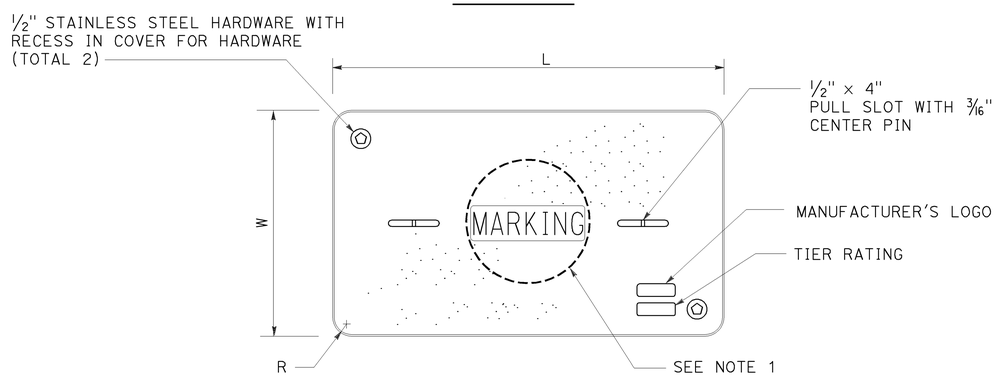

COVER TOP VIEW

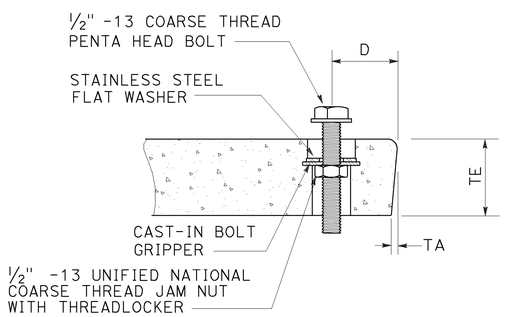

TYPICAL COVER CAPTIVE BOLT

OR SIMILAR

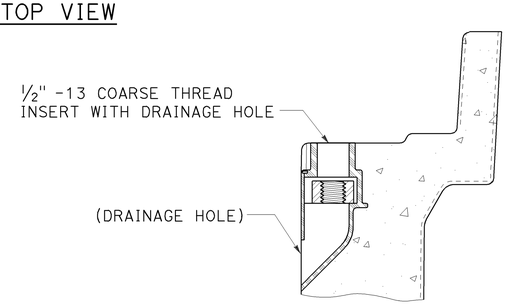

TYPICAL THREADED INSERT

OR SIMILAR

DIMENSION TABLE										
PULL BOX	PULL BOX			COVER						
	MINIMUM DEPTH BOX	MINIMUM DEPTH EXTENSION	MAXIMUM WEIGHT	L	W	R	TE	TA	D	MAXIMUM WEIGHT
No. 3½	12"	N/A	40 lb	1′ - 3⅜"	10⅛"	1⅜"	2"	⅛"	1¾"	30 lb
No. 5	12"	10"	55 lb	1′ - 11¼"	1′ - 1¾"	1⅜"	2"	⅛"	1¾"	60 lb
No. 6	12"	10"	70 lb	2′ - 6½"	1′ - 5½"	1⅜"	2"	⅛"	2"	85 lb

NOTES:

1. Pull box covers shall be marked as follows: "SERVICE" Service circuits between service point and service disconnect; "SPRINKLER-CONTROL" sprinkler control circuits, 50 V or less; "CALTRANS" on all pull boxes, except pull boxes marked "SPRINKLER-CONTROL"; and "TELEPHONE" Telephone service;
   A) No. 3½ pull box.
      1) "SIGNAL" - Traffic signal circuits with or without lighting or sign lighting circuits.
      2) "LIGHTING" - Lighting or sign lighting circuits where voltage is under 600 V.
   B) No. 5, 6, 9 or 9A pull box.
      1) "TRAFFIC SIGNAL" - Traffic signal circuits with or without lighting or sign lighting circuits.
      2) "LIGHTING" - Lighting or sign lighting circuits where voltage is under 600 V.
      3) "LIGHTING-HIGH VOLTAGE" - Lighting or sign lighting circuits where voltage is above 600 V.
      4) "IRRIGATION" - Circuits to irrigation controller 120 V or more.
      5) "RAMP METER" - Ramp meter circuits.
      6) "COUNT STATION" - Count or speed monitor circuits.
      7) "COMMUNICATIONS" - Communication circuits.
      8) "TOS COMMUNICATIONS" - TOS communication line.
      9) "TOS POWER" - TOS power.
      10) "TDC POWER" - Telephone demarcation cabinet power.
      11) "CCTV" - Closed circuit television circuits.
      12) "TMS" - Traffic monitoring station circuits.
      13) "CMS" - Changeable message sign circuits.
      14) "HAR" - Highway advisory radio circuits.
      15) "BOOSTER PUMP" - Booster pump circuit.
2. The nominal dimensions of the opening in which the cover sets shall be the same as the cover dimensions except the length and width dimensions shall be ⅛" greater.
3. Covers and boxes shall be interchangeable with California standard male and female gages. When interchanged with a standard male or female gage, the top surfaces shall be flush within ⅛". Top outside radius of covers and pull boxes shall have a ⅛" radius.
4. Pull box extension may be another pull box as long as the bottom edge of the pull box can fit into the cover opening.
5. All dimensions for the cover for non-traffic pull box are nominal values.

STATE OF CALIFORNIA
DEPARTMENT OF TRANSPORTATION

ELECTRICAL SYSTEMS (NON-TRAFFIC PULL BOX)

NO SCALE

RSP ES-8A DATED JULY 19, 2013 SUPERSEDES RSP ES-8A DATED JANUARY 20, 2012 THAT SUPPLEMENTS THE STANDARD PLANS BOOK DATED 2010.

REVISED STANDARD PLAN RSP ES-8A

2010 REVISED STANDARD PLAN RSP ES-8A

7-15-13

Dist	COUNTY	ROUTE	POST MILES TOTAL PROJECT	SHEET No.	TOTAL SHEETS
04	Ala	580, 680	Var	110C	143

2

Theresa Gabriel
REGISTERED ELECTRICAL ENGINEER

July 19, 2013
PLANS APPROVAL DATE

REGISTERED PROFESSIONAL ENGINEER
Theresa Aziz Gabriel
No. E15129
Exp. 6-30-14
ELECTRICAL
STATE OF CALIFORNIA

THE STATE OF CALIFORNIA OR ITS OFFICERS OR AGENTS SHALL NOT BE RESPONSIBLE FOR THE ACCURACY OR COMPLETENESS OF SCANNED COPIES OF THIS PLAN SHEET.

TO ACCOMPANY PLANS DATED 3-30-15

ISOFOOTCANDLE CURVE - MINIMUM

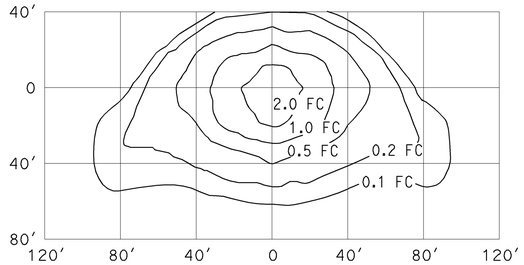

TYPE III MEDIUM CUTOFF

Cutoff Luminaire
34′ Mounting Height
Lamp operated at 22,000 lm
200-W high pressure sodium lamp
ANSI Designation S66

ISOFOOTCANDLE CURVE - MINIMUM

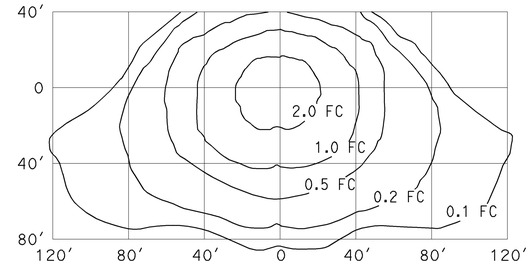

TYPE III MEDIUM CUTOFF

Cutoff Luminaire
40′ Mounting Height
Lamp operated at 37,000 lm
310-W high pressure sodium lamp
ANSI Designation S67

ISOFOOTCANDLE CURVE - MINIMUM

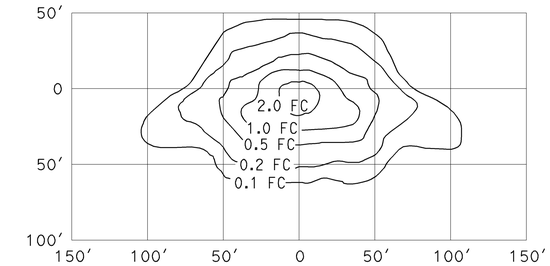

TYPE III MEDIUM CUTOFF

Cutoff Luminaire
30′ Mounting Height
Lamp operated at 16,000 lm
150-W high pressure sodium lamp
ANSI Designation S55

ISOFOOTCANDLE CURVE - MINIMUM

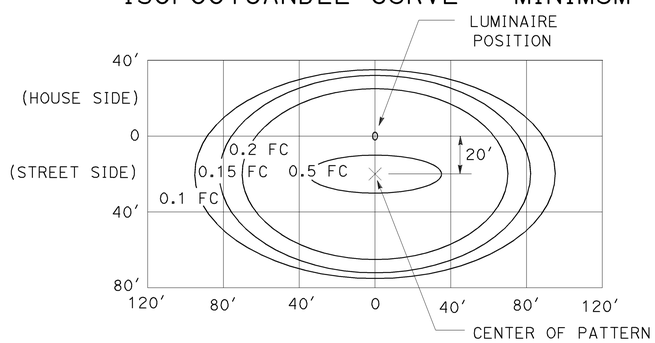

LED LUMINAIRE ROADWAY 1

165-W at 34′ Mounting Height

ISOFOOTCANDLE CURVE - MINIMUM

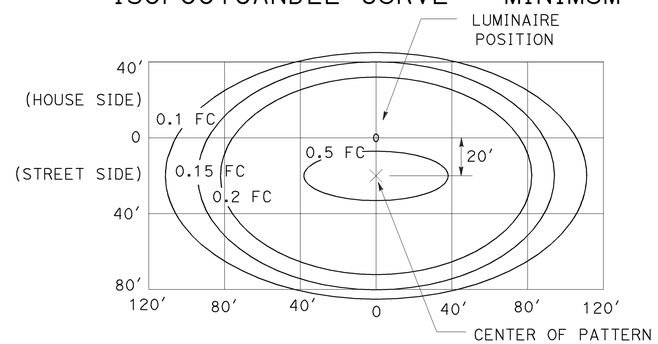

LED LUMINAIRE ROADWAY 2

235-W at 40′ Mounting Height

ISOFOOTCANDLE CURVE - MINIMUM

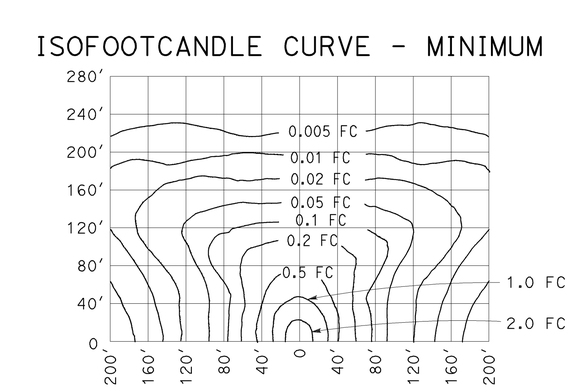

LOW PRESSURE SODIUM LUMINAIRE

40′ Mounting Height
Lamp operated at 33,000 lm
180-W low pressure sodium lamp

ISOFOOTCANDLE CURVE - MINIMUM

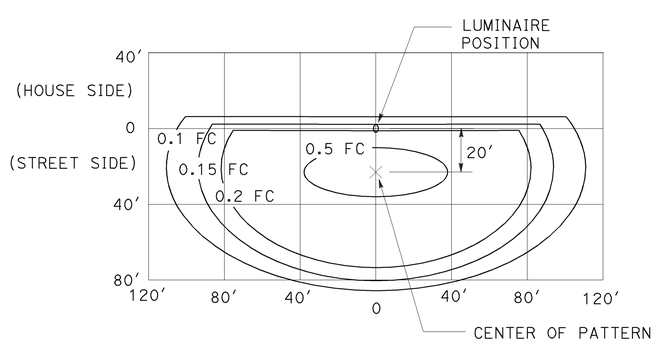

LED LUMINAIRE ROADWAY 3

235-W at 40′ Mounting Height
with back side control

ISOFOOTCANDLE CURVE - MINIMUM

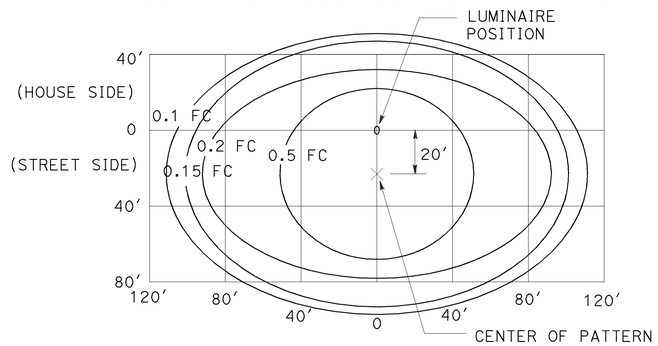

LED LUMINAIRE ROADWAY 4

300-W at 40′ Mounting Height

STATE OF CALIFORNIA
DEPARTMENT OF TRANSPORTATION

ELECTRICAL SYSTEMS (ISOFOOTCANDLE DIAGRAMS)

NO SCALE

RSP ES-10A DATED JULY 19, 2013 SUPERSEDES RSP ES-10A DATED JULY 20, 2012 THAT SUPPLEMENTS THE STANDARD PLANS BOOK DATED 2010.

REVISED STANDARD PLAN RSP ES-10A

2 **ADDED PER ADDENDUM No. 2 DATED AUGUST 13, 2015**

2010 REVISED STANDARD PLAN RSP ES-10A

7-9-13

2 **ADDED PER ADDENDUM No. 2 DATED AUGUST 13, 2015**

2

Dist	COUNTY	ROUTE	POST MILES TOTAL PROJECT	SHEET No.	TOTAL SHEETS
04	Ala	580, 680	Var	110D	143

REGISTERED CIVIL ENGINEER

July 19, 2013
PLANS APPROVAL DATE

REGISTERED PROFESSIONAL ENGINEER
Stanley P. Johnson
No. C57793
Exp. 3-31-14
CIVIL
STATE OF CALIFORNIA

THE STATE OF CALIFORNIA OR ITS OFFICERS OR AGENTS SHALL NOT BE RESPONSIBLE FOR THE ACCURACY OR COMPLETENESS OF SCANNED COPIES OF THIS PLAN SHEET.

TO ACCOMPANY PLANS DATED 3-30-15

STANDARD TYPE	SETBACK (DIMENSION A)
32	30'-0" (Min)
31	20'-0" (Min)
15, 15D, 15-SB, 21, 21D, 30	ARM LENGTH (Min)

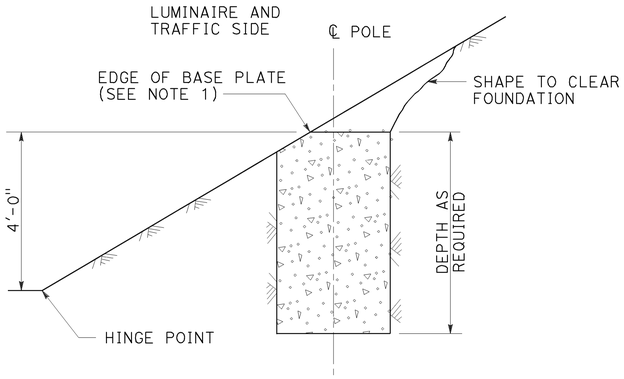

CUT SLOPES
STEEPER THAN 4:1,
LESS THAN 2:1
DETAIL A-1
See Note 2 and 3

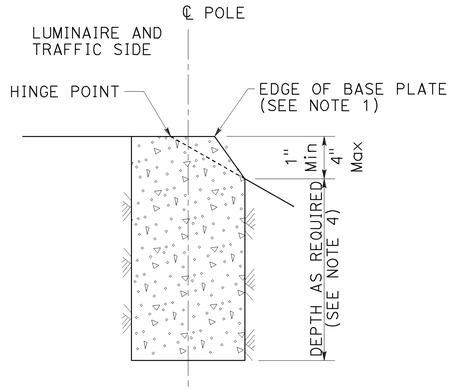

FILL SLOPES
STEEPER THAN 4:1,
LESS THAN 2:1
DETAIL A-2
See Note 2 and 3

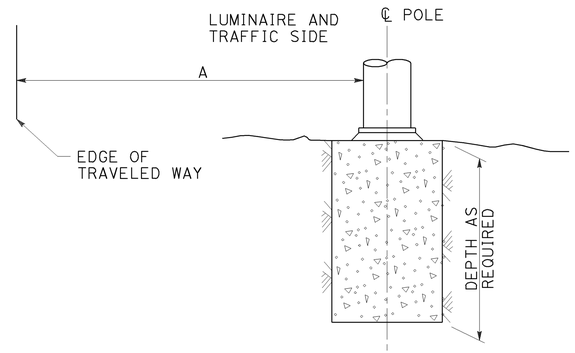

FLAT SECTIONS, CUT OR FILL SLOPES
4:1 OR FLATTER
DETAIL A-3
See Note 2

FOUNDATIONS ADJACENT TO ALL ROADWAYS EXCEPT
IN SIDEWALK, MEDIAN AND ISLAND AREAS
DETAIL A

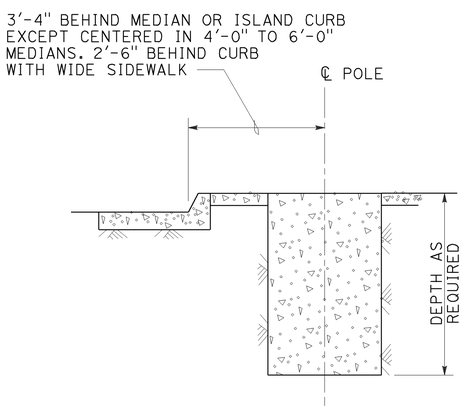

MEDIAN, ISLAND
OR WIDE SIDEWALK
DETAIL B-1
7' Wide and wider

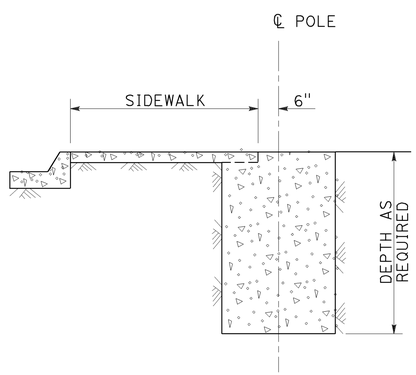

NARROW SIDEWALK
DETAIL B-2
Less than 7' wide

FOUNDATIONS IN SIDEWALK, MEDIAN AND ISLAND AREAS
DETAIL B

NOTES:

1. Where a portion of the foundation is above grade, the top edges shall have a 1" chamfer.
2. Slopes shall be horizontal to vertical ratio (Horizontal : Vertical).
3. Horizontal setbacks on cut and fill slopes steeper than 4:1 shall not exceed the distance shown for flat sections.
4. CIDH embedment depth shall be increased beyond standard depths by the diameter of the CIDH.

STATE OF CALIFORNIA
DEPARTMENT OF TRANSPORTATION

ELECTRICAL SYSTEMS (FOUNDATION INSTALLATIONS)

NO SCALE

RSP ES-11 DATED JULY 19, 2013 SUPERSEDES STANDARD PLAN ES-11
DATED MAY 20, 2011 - PAGE 488 OF THE STANDARD PLANS BOOK DATED 2010.

REVISED STANDARD PLAN RSP ES-11

2010 REVISED STANDARD PLAN RSP ES-11

7-9-13

DIST	COUNTY	ROUTE	POST MILES TOTAL PROJECT	SHEET No.	TOTAL SHEETS
04	Ala	580,680	Var	111	143

REGISTERED CIVIL ENGINEER 8-3-15 DATE

3-30-15
PLANS APPROVAL DATE

REGISTERED PROFESSIONAL ENGINEER VICTOR O. LOPEZ No. C61373 Exp. 6/30/17 CIVIL STATE OF CALIFORNIA

The State of California or its officers or agents shall not be responsible for the accuracy or completeness of scanned copies of this plan sheet.

2

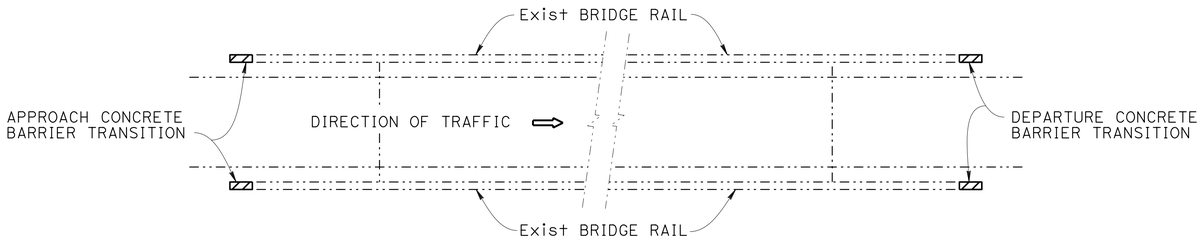

PLAN TYPE A
ONE WAY BRIDGES
NO SCALE

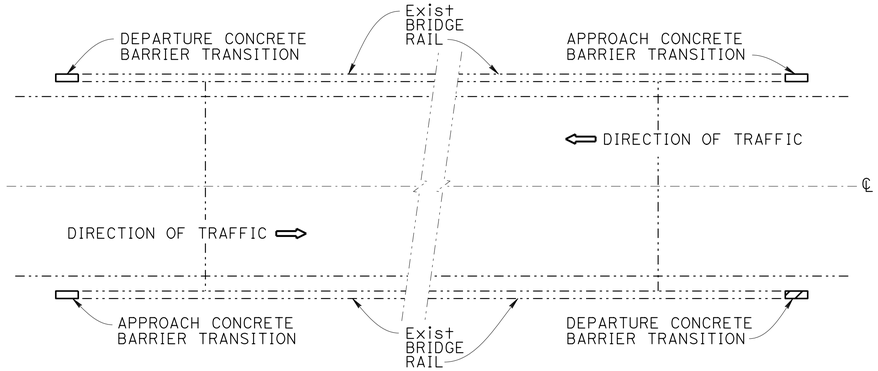

PLAN TYPE B
TWO WAY BRIDGES
NO SCALE

INDEX TO PLANS

SHEET No.	TITLE
1.	GENERAL PLAN
2.	CONCRETE BARRIER TYPE 1 (CASE 1)
3.	CONCRETE BARRIER TYPE 1 (CASE 2)
4.	CONCRETE BARRIER TYPE 1 (CASE 3)
5.	CONCRETE BARRIER TYPE 1 (CASE 4)
6.	CONCRETE BARRIER TYPE 1 OVER DI (CASE 1)
7.	CONCRETE BARRIER TYPE 1 OVER DI (CASE 2)
8.	CONCRETE BARRIER TYPE 1 OVER DI (CASE 3)
9.	CONCRETE BARRIER TYPE 1 WITH PARAPET WALL
10.	CONCRETE BARRIER TYPE 1 (MOD)
11.	CONCRETE BARRIER TYPE 2 (CASE 1)
12.	CONCRETE BARRIER TYPE 2 (CASE 2)
13.	CONCRETE BARRIER TYPE 2 OVER DI
14.	CONCRETE BARRIER TYPE 25 (CASE 1)
15.	CONCRETE BARRIER TYPE 25 (MOD) (CASE 2)
15A.	CONCRETE BARRIER TYPE 25 (CASE 3)
16.	CONCRETE BARRIER TYPE 25 WITH SOUNDWALL
17.	CONCRETE BARRIER TYPE 27 AND RETAINING WALL (CASE 1)
18.	CONCRETE BARRIER TYPE 27 AND RETAINING WALL (CASE 2)
19.	CONCRETE BARRIER TYPE 27 AND RETAINING WALL (CASE 3)
20.	CONCRETE BARRIER TYPE 60
20A.	CONCRETE BARRIER TYPE 732
20B.	OAK KNOLL BOULEVARD OVERCROSSING-RETAINING WALL (BENT 4)
20C.	LAKE PARK AVENUE OVERCROSSING FOOTING PARAPET WALL (BENT 5)
21.	REINFORCED CONCRETE RETAINING WALL
22.	CONCRETE BARRIER TYPE 60SD (MOD) COLUMN PROTECTION AT BENT 2 DETAIL No.1
23.	CONCRETE BARRIER TYPE 60SD (MOD) COLUMN PROTECTION AT BENT 2 DETAIL No.2
24.	BRIDGE NO. 33-0325 (ABUTMENT 3)
25.	BRIDGE NO. 33-0330 (BENT 2)
26.	BRIDGE NO. 33-0330 (BENT 4)
27.	LOCATION TABLE - ROUTE 580 No. 1
28.	LOCATION TABLE - ROUTE 580 No. 2
29.	LOCATION TABLE - ROUTE 580 No. 3
30.	LOCATION TABLE - ROUTE 580 No. 4
31.	LOCATION TABLE - ROUTE 580 No. 5
31A.	LOCATION TABLE - ROUTE 580 No. 6
32.	LOCATION TABLE - ROUTE 680 No. 1
33.	LOCATION TABLE - ROUTE 680 No. 2

GENERAL NOTE:

See "ROADWAY PLANS" for work locations and Midwest Guardrail System.

STANDARD PLANS DATED MAY 2010

A10A	ABBREVIATIONS (SHEET 1 OF 2)
RSP A10B	ABBREVIATIONS (SHEET 2 OF 2)
A10C	LINES AND SYMBOLS (SHEET 1 OF 3)
A10D	LINES AND SYMBOLS (SHEET 2 OF 3)
A10E	LINES AND SYMBOLS (SHEET 3 OF 3)
RSP A77U1	MIDWEST GUARDRAIL SYSTEM CONNECTIONS TO BRIDGE RAILINGS WITHOUT SIDEWALKS DETAILS No. 1
RSP A77U2	MIDWEST GUARDRAIL SYSTEM CONNECTIONS TO BRIDGE RAILINGS WITHOUT SIDEWALKS DETAILS No. 2
RSP A77U4	MIDWEST GUARDRAIL SYSTEM TRANSITION RAILING (TYPE WB-31)
B0-3	BRIDGE DETAILS

QUANTITIES

CONCRETE BARRIER (TYPE 60SD MODIFIED)	69 LF
CONCRETE BARRIER (TRANSITION)	503 LF

2 **REPLACED PER ADDENDUM No. 2 DATED AUGUST 13, 2015**

DAVID A. NEUMANN
DESIGN ENGINEER

	BY	CHECKED
DESIGN	VICTOR LOPEZ	JOEL MAGANA
DETAILS	SHUMEI JIANG, BOB EDWARDS	JOEL MAGANA
QUANTITIES	JOEL MAGANA	MICHAEL CHARAK

LOAD & RESISTANCE FACTOR DESIGN — LIVE LOADING: HL93 W/"LOW-BOY"; PERMIT DESIGN VEHICLE

	BY	CHECKED
LAYOUT	VICTOR LOPEZ	JOEL MAGANA
SPECIFICATIONS	ELAHEH MANSOUBI	PLANS AND SPECS COMPARED: ELAHEH MANSOUBI

STATE OF CALIFORNIA
DEPARTMENT OF TRANSPORTATION

DIVISION OF ENGINEERING SERVICES
DESIGN AND TECHNICAL SERVICES
SPECIAL DESIGNS BRANCH B

BRIDGE NO. VARIES
POST MILE VARIES

CONCRETE BARRIER TRANSITIONS
GENERAL PLAN

ORIGINAL SCALE IN INCHES FOR REDUCED PLANS 0 1 2 3

UNIT: 3619
PROJECT NUMBER & PHASE: 0414000064-1
CONTRACT NO.: 04-2G5211

DISREGARD PRINTS BEARING EARLIER REVISION DATES

REVISION DATES: 7-08-14, 8-3-15, 4-24-15, 4-24-15

SHEET 1 OF 33

USERNAME => s141070 DATE PLOTTED => 12-AUG-2015 TIME PLOTTED => 09:12

STRUCTURES DESIGN GENERAL PLAN SHEET (ENGLISH) (REV.09-01-10)

FILE => 04-2g5211-a-gp-r.add

DIST	COUNTY	ROUTE	POST MILES TOTAL PROJECT	SHEET No.	TOTAL SHEETS
04	Ala	580,680	Var	125A	143

REGISTERED CIVIL ENGINEER 8-3-15 DATE

3-30-15
PLANS APPROVAL DATE

REGISTERED PROFESSIONAL ENGINEER VICTOR O. LOPEZ No. C61373 Exp. 6/30/17 CIVIL STATE OF CALIFORNIA

The State of California or its officers or agents shall not be responsible for the accuracy or completeness of scanned copies of this plan sheet.

2

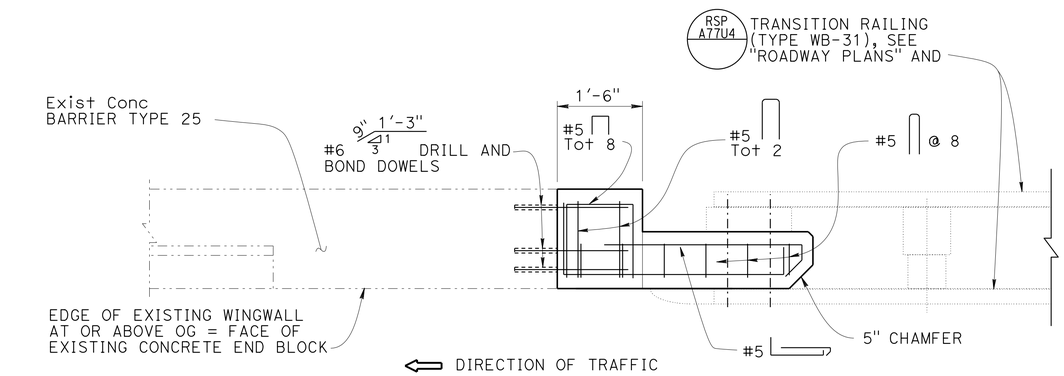

PLAN
3/4" = 1'-0"

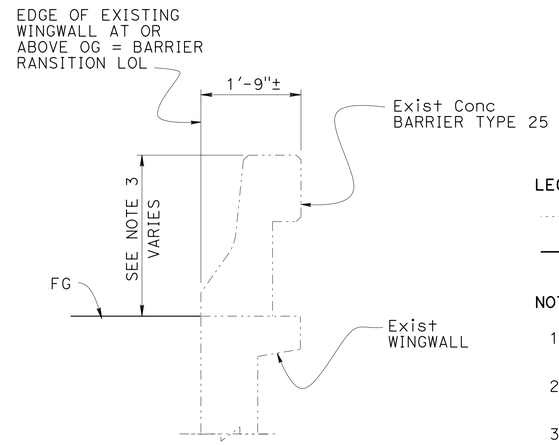

SECTION A-A
3/4" = 1'-0"

LEGEND:

Indicates existing structure

Indicates new structure

NOTES:

1. Holes used for fastening existing MBGR shall be mortar filled, unless holes were cast using pipe sleeves.
2. Existing barrier heights vary. Where exist barrier height is more than 2'-8", transition barrier height to 2'-8" @ 4:1 slope, unless otherwise indicated.
3. Heigh of Exist Concrete Barrier Type 25 End Block varies as follows"
   -ID #30, H = 3'-1"±
   -ID #29, H = 3'-2"±
   -ID #26, H = 3'-2"±

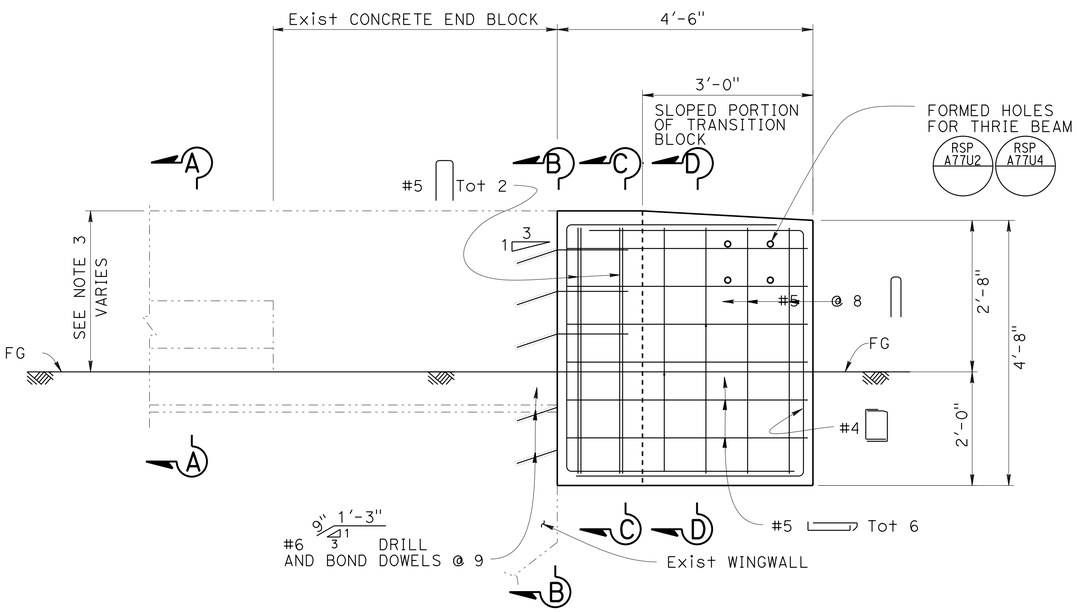

ELEVATION
3/4" = 1'-0"

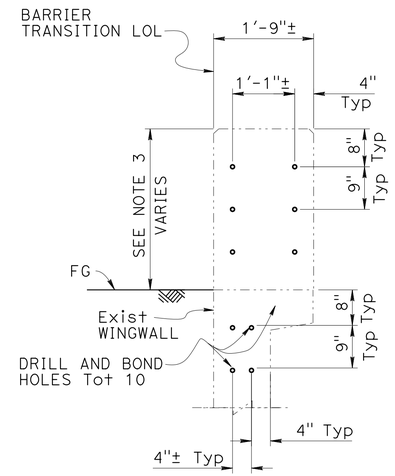

SECTION B-B
3/4" = 1'-0"

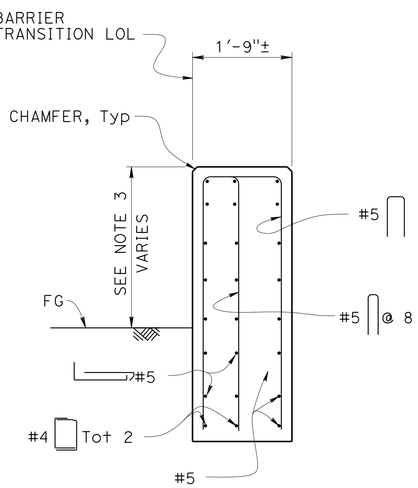

SECTION C-C
3/4" = 1'-0"

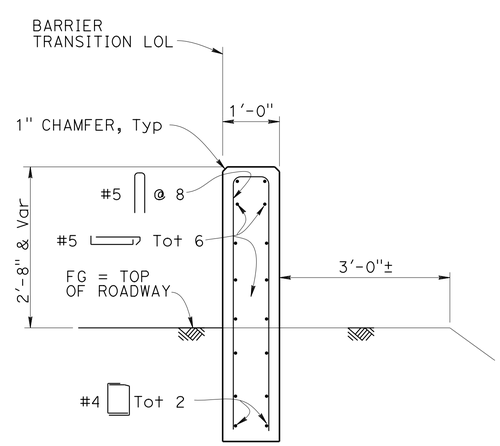

SECTION D-D
3/4" = 1'-0"

NOTE:
The contractor must verify all controlling field dimensions before ordering or fabricating any material.

2 **ADDED PER ADDENDUM No. 2 DATED AUGUST 13, 2015**

NOTE:
This sheet applies to location ID numbers 26, 29 and 30. For more information, see "LOCATION TABLE-ROUTE 580 No. 6" sheet and "ROADWAY PLANS".

BRANCH CHIEF DAVID NEUMANN	DESIGN	BY VICTOR LOPEZ	CHECKED JOEL MAGANA
	DETAILS	BY STAN CHOLDA	CHECKED JOEL MAGANA
	QUANTITIES	BY JOEL MAGANA	CHECKED MICHAEL CHARAK

STATE OF CALIFORNIA
DEPARTMENT OF TRANSPORTATION

DIVISION OF ENGINEERING SERVICES
DESIGN AND TECHNICAL SERVICES
SPECIAL DESIGNS BRANCH B

BRIDGE NO. VARIES
POST MILE VARIES

CONCRETE BARRIER TRANSITIONS
CONCRETE BARRIER TYPE 25 (CASE 3)

STRUCTURES DESIGN DETAIL SHEET (ENGLISH) (REV. 09-01-10)

ORIGINAL SCALE IN INCHES FOR REDUCED PLANS 0 1 2 3

UNIT: 3619
PROJECT NUMBER & PHASE: 0414000064-1
CONTRACT NO.: 04-2G5211

DISREGARD PRINTS BEARING EARLIER REVISION DATES

REVISION DATES: 02-27-15 8-3-15 04-28-15 4-28-15

SHEET 15A OF 33

FILE => 04-2g5211-un-misc-dt15a.dgn

USERNAME => s141070 DATE PLOTTED => 12-AUG-2015 TIME PLOTTED => 09:12

DIST	COUNTY	ROUTE	POST MILES TOTAL PROJECT	SHEET No.	TOTAL SHEETS
04	Ala	580,680	Var	130A	143

REGISTERED CIVIL ENGINEER 8-3-15 DATE

3-30-15
PLANS APPROVAL DATE

REGISTERED PROFESSIONAL ENGINEER VICTOR O. LOPEZ No. C61373 Exp. 6/30/17 CIVIL STATE OF CALIFORNIA

The State of California or its officers or agents shall not be responsible for the accuracy or completeness of scanned copies of this plan sheet.

2

NOTES:

1. See "ROADWAY PLANS" for work locations.
2. Holes used for fastening existing MBGR must be mortar filled, unless holes were cast using pipe sleeves.
3. Existing barrier heights vary. Where exist barrier height is more than 2'-8", transition barrier height to 2'-8" @ 4:1 slope, unless otherwise noted.

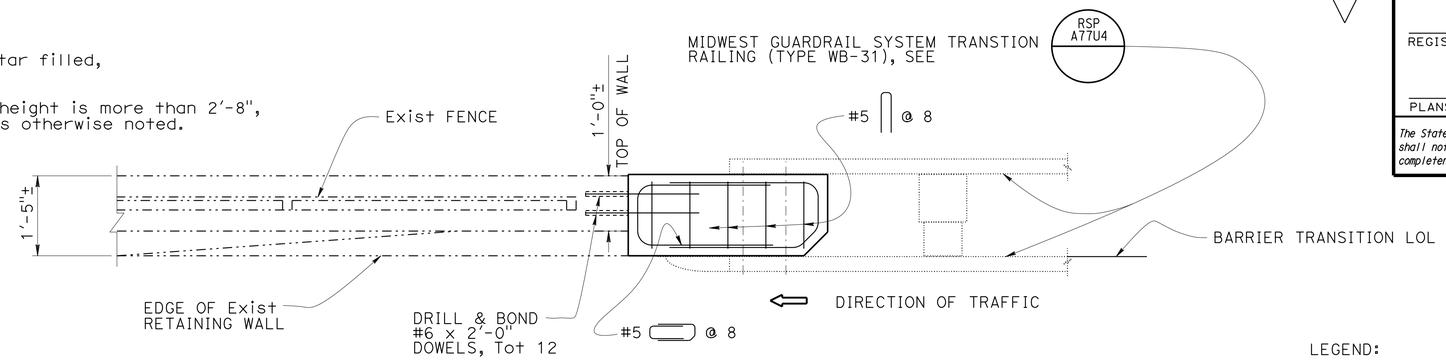

PLAN

3/4" = 1'-0"

LEGEND:

Indicates existing

Indicates new structure

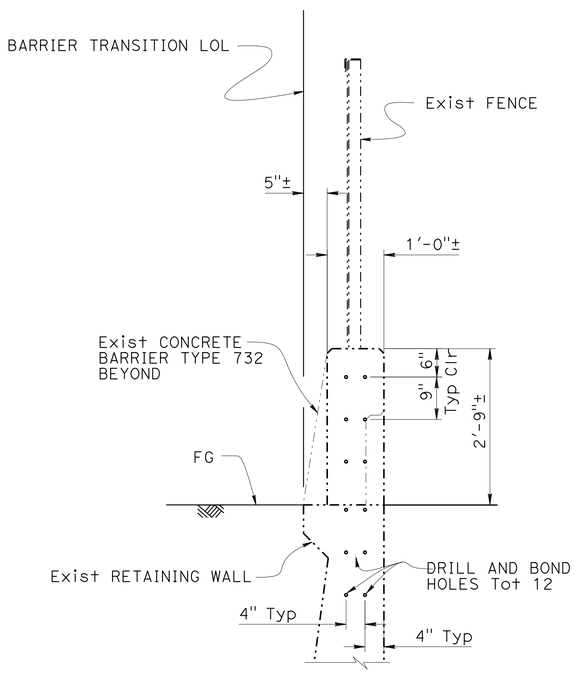

SECTION A-A

3/4" = 1'-0"

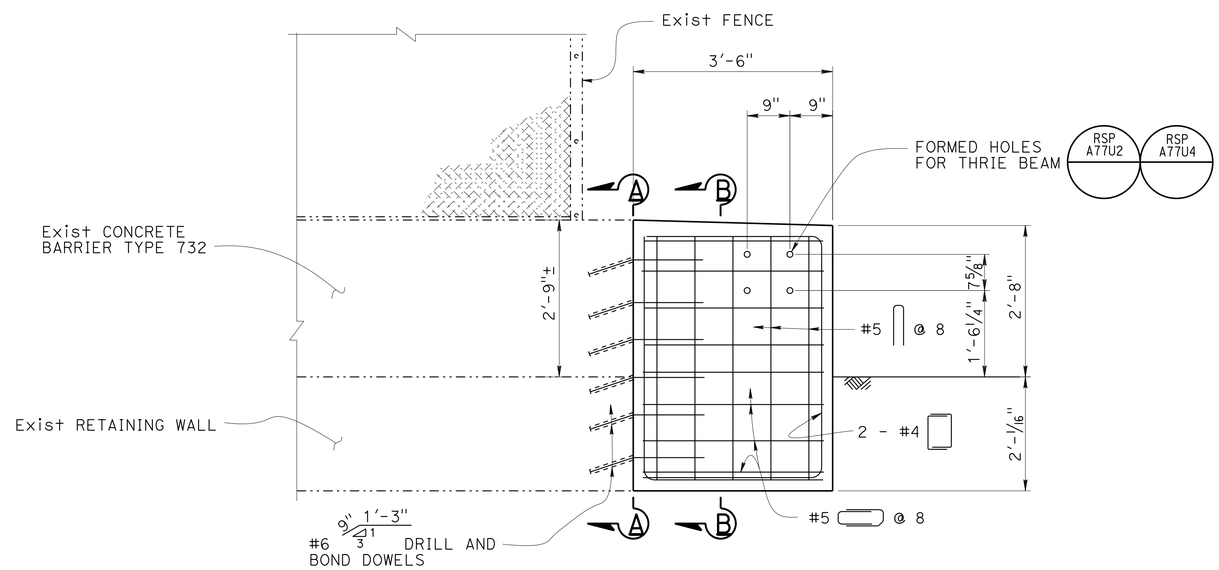

ELEVATION

3/4" = 1'-0"

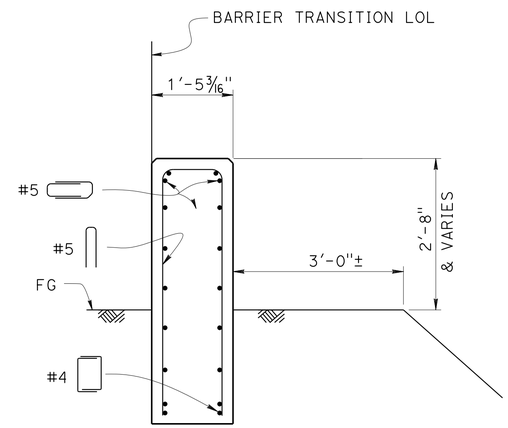

SECTION B-B

3/4" = 1'-0"

NOTE:
The contractor must verify all controlling field dimensions before ordering or fabricating any material.

2 **ADDED PER ADDENDUM No. 2 DATED AUGUST 13, 2015**

NOTE:
This sheet applies to location ID number 16. For more information, see "LOCATION TABLE-ROUTE 580 No. 6" sheet and "ROADWAY PLANS".

BRANCH CHIEF DAVID NEUMANN

	BY	CHECKED
DESIGN	VICTOR LOPEZ	JOEL MAGANA
DETAILS	STAN CHOLDA	JOEL MAGANA
QUANTITIES	VICTOR LOPEZ	JOEL MAGANA

STATE OF CALIFORNIA
DEPARTMENT OF TRANSPORTATION

DIVISION OF ENGINEERING SERVICES
DESIGN AND TECHNICAL SERVICES
SPECIAL DESIGNS BRANCH B

BRIDGE NO. N/A
POST MILE 21.32

CONCRETE BARRIER TRANSITIONS
CONCRETE BARRIER TYPE 732

STRUCTURES DESIGN DETAIL SHEET (ENGLISH) (REV. 09-01-10)

ORIGINAL SCALE IN INCHES FOR REDUCED PLANS 0 1 2 3

UNIT: 3619
PROJECT NUMBER & PHASE: 0414000064-1
CONTRACT NO.: 04-2G5211

DISREGARD PRINTS BEARING EARLIER REVISION DATES

REVISION DATES 02-27-15 8-3-15 2-25-15 4-28-15

SHEET 20A OF 33

FILE => 04-2g5211-un-misc-dt20a.dgn

USERNAME => s141070 DATE PLOTTED => 12-AUG-2015 TIME PLOTTED => 09:12

DIST	COUNTY	ROUTE	POST MILES TOTAL PROJECT	SHEET No.	TOTAL SHEETS
04	Ala	580,680	Var	130B	143

REGISTERED CIVIL ENGINEER 8-3-15 DATE

3-30-15
PLANS APPROVAL DATE

REGISTERED PROFESSIONAL ENGINEER VICTOR O. LOPEZ No. C61373 Exp. 6/30/17 CIVIL STATE OF CALIFORNIA

The State of California or its officers or agents shall not be responsible for the accuracy or completeness of scanned copies of this plan sheet.

2

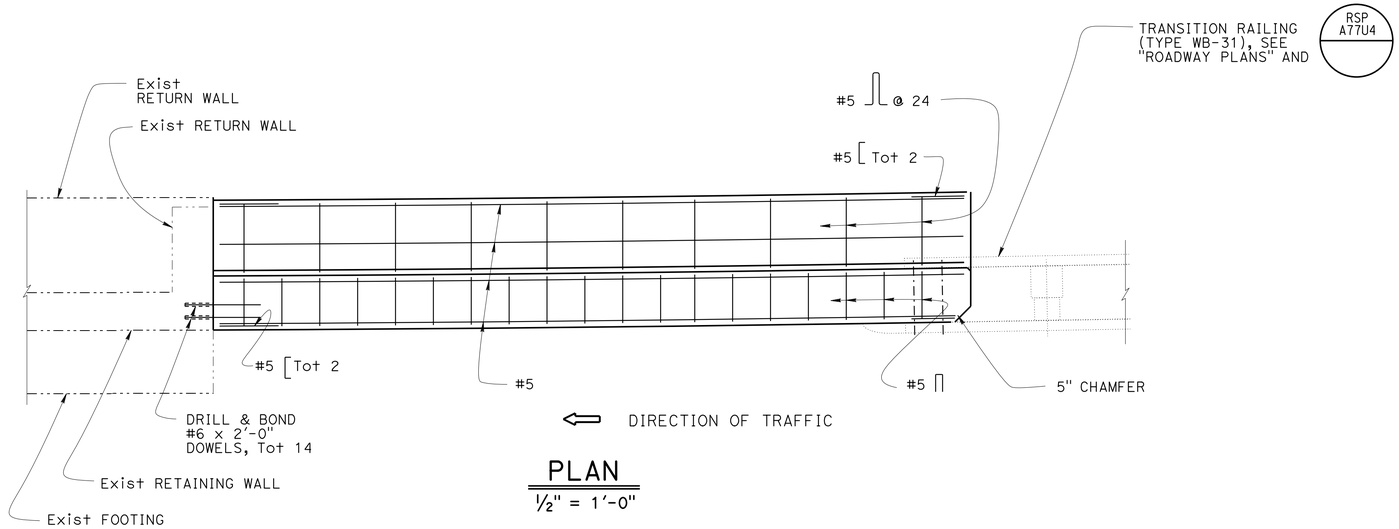

PLAN
½" = 1'-0"

NOTES:

1. Holes used for fastening existing MBGR shall be mortar filled, unless holes were cast using pipe sleeves.
2. Existing barrier heights vary. Where exist barrier height i more than 2'-8", transition barrier height to 2'-8" @ 4:1 slope.
3. 4"ø drains at 6'-0" center to center, total 3 located 4" above top of concrete surface.

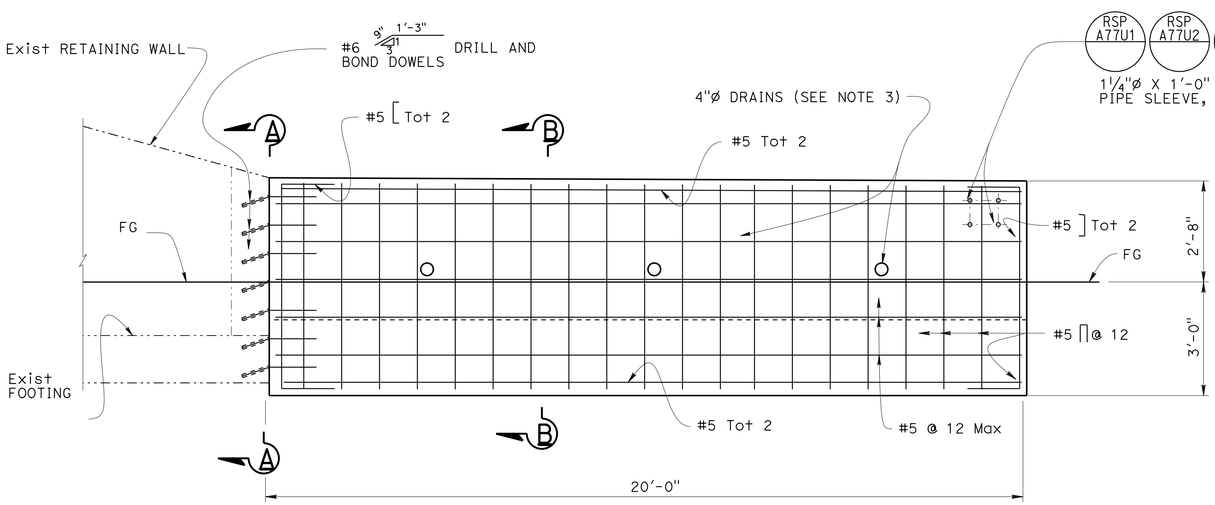

ELEVATION
½" = 1'-0"

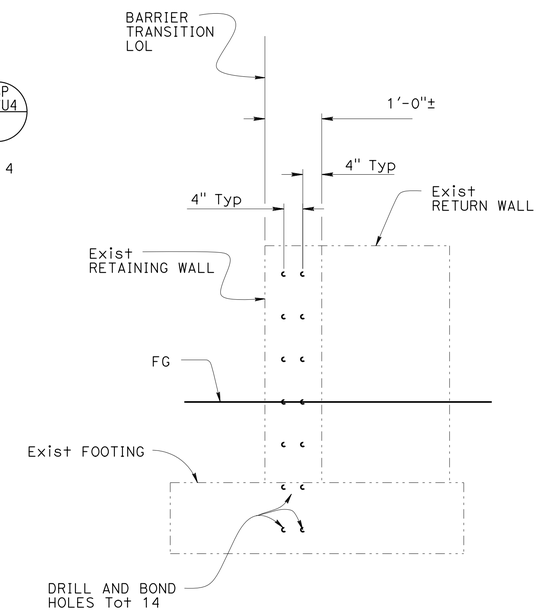

SECTION A-A
¾" = 1'-0"

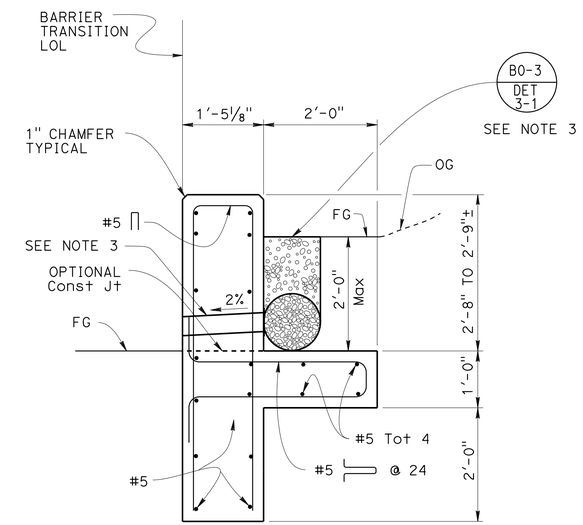

SECTION A-A
¾" = 1'-0"

NOTE:
The contractor must verify all controlling field dimensions before ordering or fabricating any material.

2 **ADDED PER ADDENDUM No. 2 DATED AUGUST 13, 2015**

NOTE:
This sheet applies to location ID: number 49. For more information see "LOCATION TABLE-ROUTE 580 No. 6" sheet and "ROADWAY PLANS".

OAK KNOLL BLVD. OVERCROSSING
CONCRETE BARRIER TRANSITIONS
RETAINING WALL (BENT 4)

BRANCH CHIEF DAVID NEUMANN

	BY	CHECKED
DESIGN	VICTOR LOPEZ	JOEL MAGANA
DETAILS	STAN CHOLDA	JOEL MAGANA
QUANTITIES	VICTOR LOPEZ	JOEL MAGANA

STATE OF CALIFORNIA DEPARTMENT OF TRANSPORTATION

DIVISION OF ENGINEERING SERVICES DESIGN AND TECHNICAL SERVICES SPECIAL DESIGNS BRANCH B

BRIDGE NO. 33-0353
POST MILE 36.75

STRUCTURES DESIGN DETAIL SHEET (ENGLISH) (REV. 09-01-10)

ORIGINAL SCALE IN INCHES FOR REDUCED PLANS 0 1 2 3

UNIT: 3619
PROJECT NUMBER & PHASE: 0414000064-1
CONTRACT NO.: 04-2G5211

DISREGARD PRINTS BEARING EARLIER REVISION DATES

REVISION DATES 7-09-14 8-3-15 3-13-15 4-14-15

SHEET 20B OF 33

FILE => 04-2g5211-un-misc-dt20b.dgn

USERNAME => s141070 DATE PLOTTED => 12-AUG-2015 TIME PLOTTED => 09:12

DIST	COUNTY	ROUTE	POST MILES TOTAL PROJECT	SHEET No.	TOTAL SHEETS
04	Ala	580,680	Var	130C	143

REGISTERED CIVIL ENGINEER 8-3-15 DATE

3-30-15
PLANS APPROVAL DATE

REGISTERED PROFESSIONAL ENGINEER VICTOR O. LOPEZ No. C61373 Exp. 6/30/17 CIVIL STATE OF CALIFORNIA

The State of California or its officers or agents shall not be responsible for the accuracy or completeness of scanned copies of this plan sheet.

2

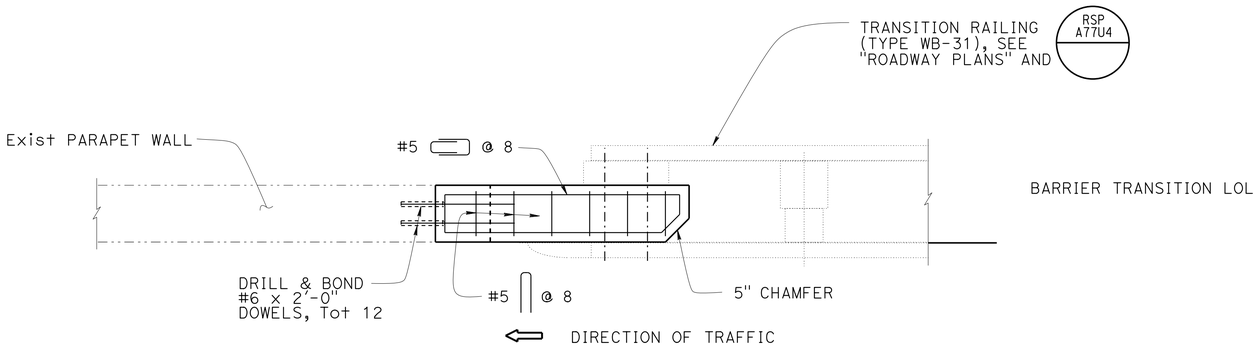

PLAN

3/4" = 1'-0"

LEGEND:

- Indicates existing structure
- Indicates new structure

NOTES:

1. Holes used for fastening existing MBGR shall be mortar filled, unless holes were cast using pipe sleeves.
2. Existing barrier heights vary. Where exist barrier height is more than 2'-8", transition barrier height to 2'-8" @ 4:1 slope.

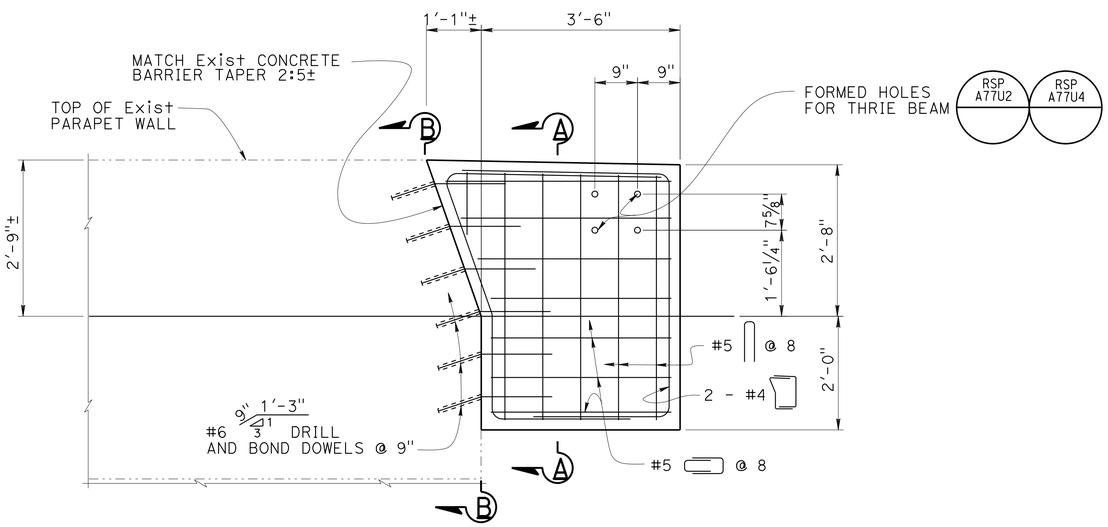

ELEVATION

3/4" = 1'-0"

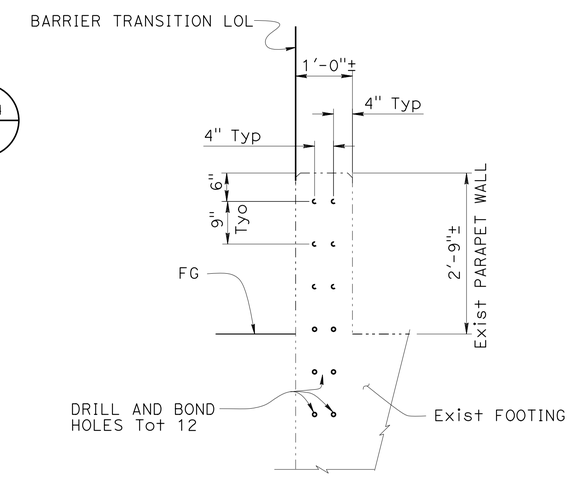

SECTION B-B

3/4" = 1'-0"

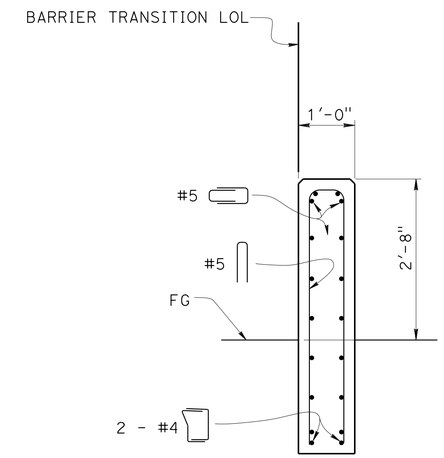

SECTION A-A

3/4" = 1'-0"

NOTE:
This sheet applies to location ID: numbers 69 on ROUTE 580. For more information see "LOCATION TABLE-ROUTE 580 No. 6" sheet.

NOTE:
The contractor must verify all controlling field dimensions before ordering or fabricating any material.

2 **ADDED PER ADDENDUM No. 2 DATED AUGUST 13, 2015**

LAKE PARK AVE. OVERCROSSING
CONCRETE BARRIER TRANSITIONS
FOOTING PARAPET WALL (BENT 5)

BRANCH CHIEF DAVID NEUMANN

	BY	CHECKED
DESIGN	VICTOR LOPEZ	JOEL MAGANA
DETAILS	STAN CHOLDA	JOEL MAGANA
QUANTITIES	VICTOR LOPEZ	JOEL MAGANA

STATE OF CALIFORNIA DEPARTMENT OF TRANSPORTATION

DIVISION OF ENGINEERING SERVICES DESIGN AND TECHNICAL SERVICES SPECIAL DESIGNS BRANCH B

BRIDGE NO. 33-0314
POST MILE 43.23

STRUCTURES DESIGN DETAIL SHEET (ENGLISH) (REV. 09-01-10)

ORIGINAL SCALE IN INCHES FOR REDUCED PLANS 0 1 2 3

UNIT: 3619
PROJECT NUMBER & PHASE: 0414000064-1
CONTRACT NO.: 04-2G5211

DISREGARD PRINTS BEARING EARLIER REVISION DATES

REVISION DATES 7-08-14 8-11-15 8-25-15 8-27-15

SHEET 20C OF 33

FILE => 04-2g5211-uh-misc-dt20c.dgn

USERNAME => s141070 DATE PLOTTED => 12-AUG-2015 TIME PLOTTED => 08:12

DIST	COUNTY	ROUTE	POST MILES TOTAL PROJECT	SHEET No.	TOTAL SHEETS
04	Ala	580,680	Var	131	143

REGISTERED CIVIL ENGINEER 8-3-15 DATE

3-30-15
PLANS APPROVAL DATE

REGISTERED PROFESSIONAL ENGINEER VICTOR O. LOPEZ No. C61373 Exp. 6/30/17 CIVIL STATE OF CALIFORNIA

The State of California or its officers or agents shall not be responsible for the accuracy or completeness of scanned copies of this plan sheet.

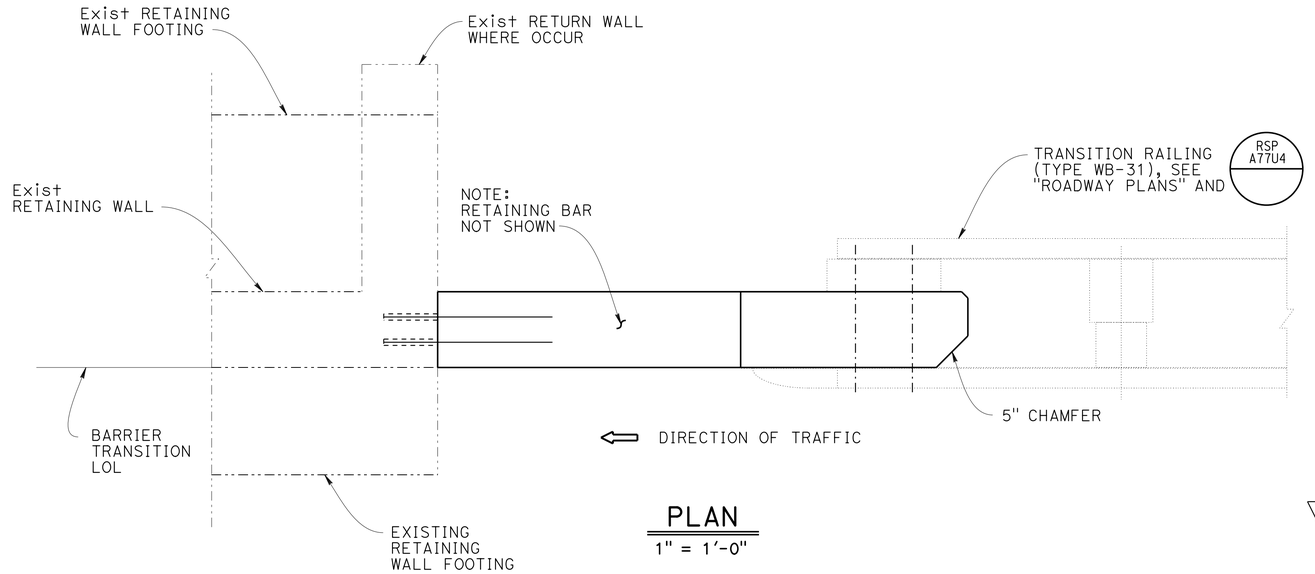

PLAN
1" = 1'-0"

LEGEND:

Indicates existing structure

Indicates new structure

NOTES:

1. Holes used for fastening existing MBGR shall be mortar filled, unless holes were cast using pipe sleeves.
2. Existing barrier heights vary. Where exist barrier height is more than 2'-8", transition barrier height to 2'-8" @ 4:1 slope.

2

TABLE 1					
LOCATION ID No.	ROUTE	POST MILE	"h"	"a"	TRANSITION LENGTH, "L" a + 3'-0" = L
40	580 WB	32.72	1'-8"	4'-0"	7'-0"
54	580 WB	39.45	2'-2"	2'-0"	5'-0"
57	580 WB	39.93	2'-2"	2'-0"	5'-0"
61W	580 WB	41.33	1'-10"	3'-4"	6'-4"
62	580 EB	41.67	2'-1"	2'-4"	5'-4"

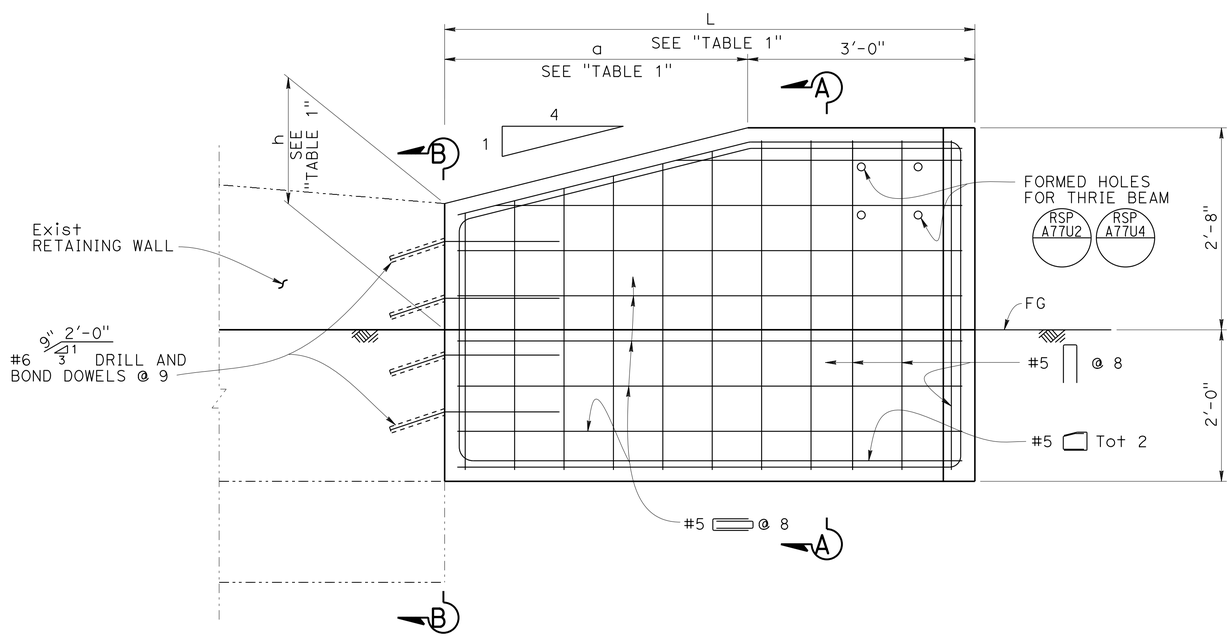

ELEVATION
1" = 1'-0"

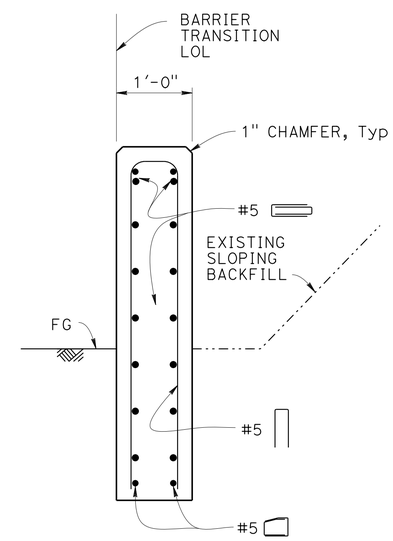

SECTION A-A
1" = 1'-0"

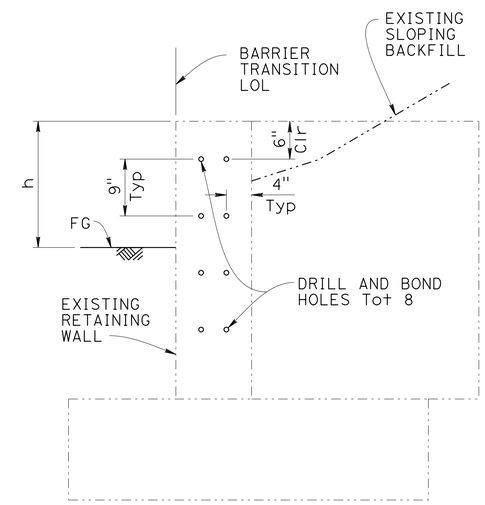

SECTION B-B
NO SCALE

NOTE:
The contractor must verify all controlling field dimensions before ordering or fabricating any material.

2 **REPLACED PER ADDENDUM No. 2 DATED AUGUST 13, 2015**

NOTE:
This sheet applies to location ID: numbers 40, 54, 57, 61W and 62. For more information see "LOCATION TABLE-ROUTE 580 No. 4" sheet and "ROADWAY PLANS".

BRANCH CHIEF DAVID NEUMANN	DESIGN	BY VICTOR LOPEZ	CHECKED JOEL MAGANA
	DETAILS	BY SHUMEI JIANG BOB EDWARDS	CHECKED JOEL MAGANA
	QUANTITIES	BY VICTOR LOPEZ	CHECKED JOEL MAGANA

STATE OF CALIFORNIA
DEPARTMENT OF TRANSPORTATION

DIVISION OF ENGINEERING SERVICES
DESIGN AND TECHNICAL SERVICES
SPECIAL DESIGNS BRANCH B

BRIDGE NO. VARIES
POST MILE VARIES

CONCRETE BARRIER TRANSITIONS
REINFORCED CONCRETE RETAINING WALL

STRUCTURES DESIGN DETAIL SHEET (ENGLISH) (REV. 09-01-10)

ORIGINAL SCALE IN INCHES FOR REDUCED PLANS 0 1 2 3

UNIT: 3619
PROJECT NUMBER & PHASE: 0414000064-1
CONTRACT NO.: 04-2G5211

DISREGARD PRINTS BEARING EARLIER REVISION DATES

REVISION DATES 7-09-14 8-1-15 8-3-15 8-13-15

SHEET 21 OF 33

FILE => 04-2g5211-uh-misc-dt21-r.dgn

USERNAME => s141070 DATE PLOTTED => 12-AUG-2015 TIME PLOTTED => 09:12

DIST	COUNTY	ROUTE	POST MILES TOTAL PROJECT	SHEET No.	TOTAL SHEETS
04	Ala	580,680	Var	140	143

REGISTERED CIVIL ENGINEER 8-3-15 DATE

3-30-15
PLANS APPROVAL DATE

REGISTERED PROFESSIONAL ENGINEER VICTOR O. LOPEZ No. C61373 Exp. 6/30/17 CIVIL STATE OF CALIFORNIA

The State of California or its officers or agents shall not be responsible for the accuracy or completeness of scanned copies of this plan sheet.

REINFORCED CONCRETE RETAINING WALLS ROUTE 580

LOCATION ID No. (SEE ROADWAY PLANS)	BRIDGE No.	BRIDGE NAME OR FACILITY DESCRIPTION	POST MILE	DIRECTION AND SIDE	No. OF CONNECTIONS (WB-31)		GENERAL PLAN TYPE	TRANSITION LENGTH EA (LF)	CONCRETE BARRIER TRANSITION TOTAL LENGTH (LF)
					APPROACH END	DEPARTURE END			
40	NEAR 33-0337	Main Line/Fairmont Drive OC	32.72	WB, RIGHT	1	—	N/A	7'-0"	7'-0"
54	N/A	Ramp/On from Mountain Blvd/Rte 13	39.45	WB, RIGHT	1	—	N/A	5'-0"	5'-0"
57	33-0328	Main Line/Birdsall Ave POC	39.93	WB, RIGHT	1	—	N/A	5'-0"	5'-0"
61W	33-0323	Main Line/Boston Ave OC	41.33	WB, RIGHT	1	—	N/A	6'-4"	6'-4"
62	N/A	Ramp/Off to Fruitvale Ave	41.67	EB, RIGHT	1	—	N/A	5'-4"	5'-4"

BRIDGE No. 33-0323 COLUMN PROTECTION AT BENT 2 ROUTE 580 (See Note 2)

LOCATION ID No. (SEE ROADWAY PLANS)	BRIDGE No.	BRIDGE NAME OR FACILITY DESCRIPTION	POST MILE	DIRECTION AND SIDE	No. OF CONNECTIONS (WB-31)		GENERAL PLAN TYPE	LENGTH EA (LF)	CONCRETE BARRIER TYPE 60SD (Mod) LENGTH (LF) 2
					APPROACH END	DEPARTURE END			
61E	33-0323	Main Line/Boston Ave OC (Bent 2)	41.33	EB, RIGHT	1	1	N/A	68'-5"±	68'-5"±

BRIDGE No. 33-0325 (ABUTMENT 3) ROUTE 580

LOCATION ID No. (SEE ROADWAY PLANS)	BRIDGE No.	BRIDGE NAME OR FACILITY DESCRIPTION	POST MILE	DIRECTION AND SIDE	No. OF CONNECTIONS (WB-31)		GENERAL PLAN TYPE	TRANSITION LENGTH EA (LF)	CONCRETE BARRIER TRANSITION TOTAL LENGTH (LF)
					APPROACH END	DEPARTURE END			
63	33-0325	Main Line/Sheffield Ave OC (Abut. 3)	41.75	EB, RIGHT	1	—	N/A	9'-4"	9'-4"

BRIDGE No. 33-0330 (BENT 2) ROUTE 580

LOCATION ID No. (SEE ROADWAY PLANS)	BRIDGE No.	BRIDGE NAME OR FACILITY DESCRIPTION	POST MILE	DIRECTION AND SIDE	No. OF CONNECTIONS (WB-31)		GENERAL PLAN TYPE	TRANSITION LENGTH EA (LF)	CONCRETE BARRIER TRANSITION TOTAL LENGTH (LF)
					APPROACH END	DEPARTURE END			
41E	33-0330	Main Line/Grand Ave OC (Bent 2)	33.94	EB, RIGHT	1	—	N/A	20'-0"	20'-0"

BRIDGE No. 33-0330 (BENT 4) ROUTE 580

LOCATION ID No. (SEE ROADWAY PLANS)	BRIDGE No.	BRIDGE NAME OR FACILITY DESCRIPTION	POST MILE	DIRECTION AND SIDE	No. OF CONNECTIONS (WB-31)		GENERAL PLAN TYPE	TRANSITION LENGTH EA (LF)	CONCRETE BARRIER TRANSITION TOTAL LENGTH (LF)
					APPROACH END	DEPARTURE END			
41W	33-0330	Main Line/Grand Ave OC (Bent 4)	33.94	WB, RIGHT	1	—	N/A	20'-0"	20'-0"

NOTES:

1. For construction details of barrier transitions lengths identified in these location tables,refer to the specific barrier type sheet in each table description.
2. This location consists of a total of 3 segments.

NOTE:
The contractor must verify all controlling field dimensions before ordering or fabricating any material.

2 **REPLACED PER ADDENDUM No. 2 DATED AUGUST 13, 2015**

BRANCH CHIEF DAVID NEUMANN

	BY	CHECKED
DESIGN	VICTOR LOPEZ	JOEL MAGANA
DETAILS	SHUMEI JIANG, BOB EDWARDS	JOEL MAGANA
QUANTITIES	VICTOR LOPEZ	JOEL MAGANA

STATE OF CALIFORNIA
DEPARTMENT OF TRANSPORTATION

DIVISION OF ENGINEERING SERVICES
DESIGN AND TECHNICAL SERVICES
SPECIAL DESIGNS BRANCH B

BRIDGE NO. VARIES
POST MILE VARIES

CONCRETE BARRIER TRANSITIONS
LOCATION TABLE - ROUTE 580 No. 4

STRUCTURES DESIGN DETAIL SHEET (ENGLISH) (REV. 09-01-10)

ORIGINAL SCALE IN INCHES FOR REDUCED PLANS 0 1 2 3

UNIT: 3619
PROJECT NUMBER & PHASE: 0414000064-1 CONTRACT NO.: 04-2G5211

DISREGARD PRINTS BEARING EARLIER REVISION DATES

REVISION DATES 7-08-14 8-3-15 3-30-15 4-15-15

SHEET 30 OF 33

FILE => 04-2g5211-un-misc-dt30-r.add

USERNAME => s141070 DATE PLOTTED => 12-AUG-2015 TIME PLOTTED => 08:12

DIST	COUNTY	ROUTE	POST MILES TOTAL PROJECT	SHEET No.	TOTAL SHEETS
04	Ala	580,680	Var	141A	143

2

REGISTERED CIVIL ENGINEER 8-3-15 DATE

3-30-15
PLANS APPROVAL DATE

REGISTERED PROFESSIONAL ENGINEER VICTOR O. LOPEZ No. C61373 Exp. 6/30/17 CIVIL STATE OF CALIFORNIA

The State of California or its officers or agents shall not be responsible for the accuracy or completeness of scanned copies of this plan sheet.

CONCRETE BARRIER TYPE 732 ROUTE 580

LOCATION ID No. (SEE ROADWAY PLANS)	BRIDGE No.	BRIDGE NAME OR FACILITY DESCRIPTION	POST MILE	DIRECTION AND SIDE	No. OF CONNECTIONS (WB-31)		GENERAL PLAN TYPE	TRANSITION LENGTH EA (LF)	CONCRETE BARRIER TRANSITION TOTAL LENGTH (LF)
					APPROACH END	DEPARTURE END			
16	N/A	Rt Ramp Off to NB San Ramon	21.32	WB, RIGHT	1	—	N/A	3'-6"	3'-6"

CONCRETE BARRIER TYPE 25 (CASE 3) ROUTE 580

LOCATION ID No. (SEE ROADWAY PLANS)	BRIDGE No.	BRIDGE NAME OR FACILITY DESCRIPTION	POST MILE	DIRECTION AND SIDE	No. OF CONNECTIONS (WB-31)		GENERAL PLAN TYPE	TRANSITION LENGTH EA (LF)	CONCRETE BARRIER TRANSITION TOTAL LENGTH (LF)
					APPROACH END	DEPARTURE END			
26	33-0233L	Main Line/Crow Canyon Rd UC	28.41	EB, RIGHT	1	—	N/A	4'-6"	4'-6"
29	33-0232L	Main Line/Crow Cr	28.62	EB, RIGHT	1	—	N/A	4'-6"	4'-6"
30	33-0193L	Main Line/Redwood Rd UC	29.40	EB, RIGHT	1	—	N/A	4'-6"	4'-6"

BRIDGE No. 33-0314 BENT 5 FOOTING PARAPET WALL ROUTE 580

LOCATION ID No. (SEE ROADWAY PLANS)	BRIDGE No.	BRIDGE NAME OR FACILITY DESCRIPTION	POST MILE	DIRECTION AND SIDE	No. OF CONNECTIONS (WB-31)		GENERAL PLAN TYPE	TRANSITION LENGTH EA (LF)	CONCRETE BARRIER TRANSITION TOTAL LENGTH (LF)
					APPROACH END	DEPARTURE END			
69	33-0314	Main Line/Lake Park Ave OC	43.23	EB, RIGHT	1	—	N/A	3'-6"	3'-6"

BRIDGE No. 33-0353 RETAINING WALL AT BENT 4, ROUTE 580

LOCATION ID No. (SEE ROADWAY PLANS)	BRIDGE No.	BRIDGE NAME OR FACILITY DESCRIPTION	POST MILE	DIRECTION AND SIDE	No. OF CONNECTIONS (WB-31)		GENERAL PLAN TYPE	TRANSITION LENGTH EA (LF)	CONCRETE BARRIER TRANSITION TOTAL LENGTH (LF)
					APPROACH END	DEPARTURE END			
49	33-0353	Main Line/Oak Knoll Blvd OC	36.75	EB, RIGHT	1	—	N/A	20'-0"	20'-0"

NOTE:
The contractor must verify all controlling field dimensions before ordering or fabricating any material.

2 **ADDED PER ADDENDUM No. 2 DATED AUGUST 13, 2015**

NOTE:
For construction details of barrier transitions lengths identified in these location tables, refer to the specific barrier type sheet in each table description.

BRANCH CHIEF DAVID NEUMANN

	BY	CHECKED
DESIGN	VICTOR LOPEZ	JOEL MAGANA
DETAILS	STAN CHOLDA	JOEL MAGANA
QUANTITIES	VICTOR LOPEZ	JOEL MAGANA

STATE OF CALIFORNIA
DEPARTMENT OF TRANSPORTATION

DIVISION OF ENGINEERING SERVICES
DESIGN AND TECHNICAL SERVICES
SPECIAL DESIGNS BRANCH B

BRIDGE NO. VARIES
POST MILE VARIES

CONCRETE BARRIER TRANSITIONS
LOCATION TABLE - ROUTE 580 No. 6

STRUCTURES DESIGN DETAIL SHEET (ENGLISH) (REV. 09-01-10)

ORIGINAL SCALE IN INCHES FOR REDUCED PLANS 0 1 2 3

UNIT: 3619
PROJECT NUMBER & PHASE: 0414000064-1
CONTRACT NO.: 04-2G5211

DISREGARD PRINTS BEARING EARLIER REVISION DATES

REVISION DATES 7-08-14 8-25-15 8-3-15

SHEET 31A OF 33

FILE => 04-2g5211-uh-misc-dt31a.dgn

USERNAME => s141070 DATE PLOTTED => 12-AUG-2015 TIME PLOTTED => 09:12