Dist	COUNTY	ROUTE	POST MILES TOTAL PROJECT	SHEET No.	TOTAL SHEETS
04	Son	12	38.7/41.3	1	9

INDEX OF PLANS

SHEET No.	DESCRIPTION
1	TITLE SHEET AND LOCATION MAP
2	TYPICAL CROSS SECTIONS
3	CONSTRUCTION AREA SIGNS
4	PAVEMENT DELINEATION QUANTITIES
5	SUMMARY OF QUANTITIES
6-9	NEW AND REVISED STANDARD PLANS

THE STANDARD PLANS LIST APPLICABLE TO THIS CONTRACT IS INCLUDED IN THE NOTICE TO BIDDERS AND SPECIAL PROVISIONS BOOK.

STATE OF CALIFORNIA

DEPARTMENT OF TRANSPORTATION

PROJECT PLANS FOR CONSTRUCTION ON

STATE HIGHWAY

IN SONOMA COUNTY
ON ROUTE 12 FROM 0.1 MILE SOUTH OF NAPA ROAD TO JUNCTION ROUTE 121

TO BE SUPPLEMENTED BY STANDARD PLANS DATED MAY 2006

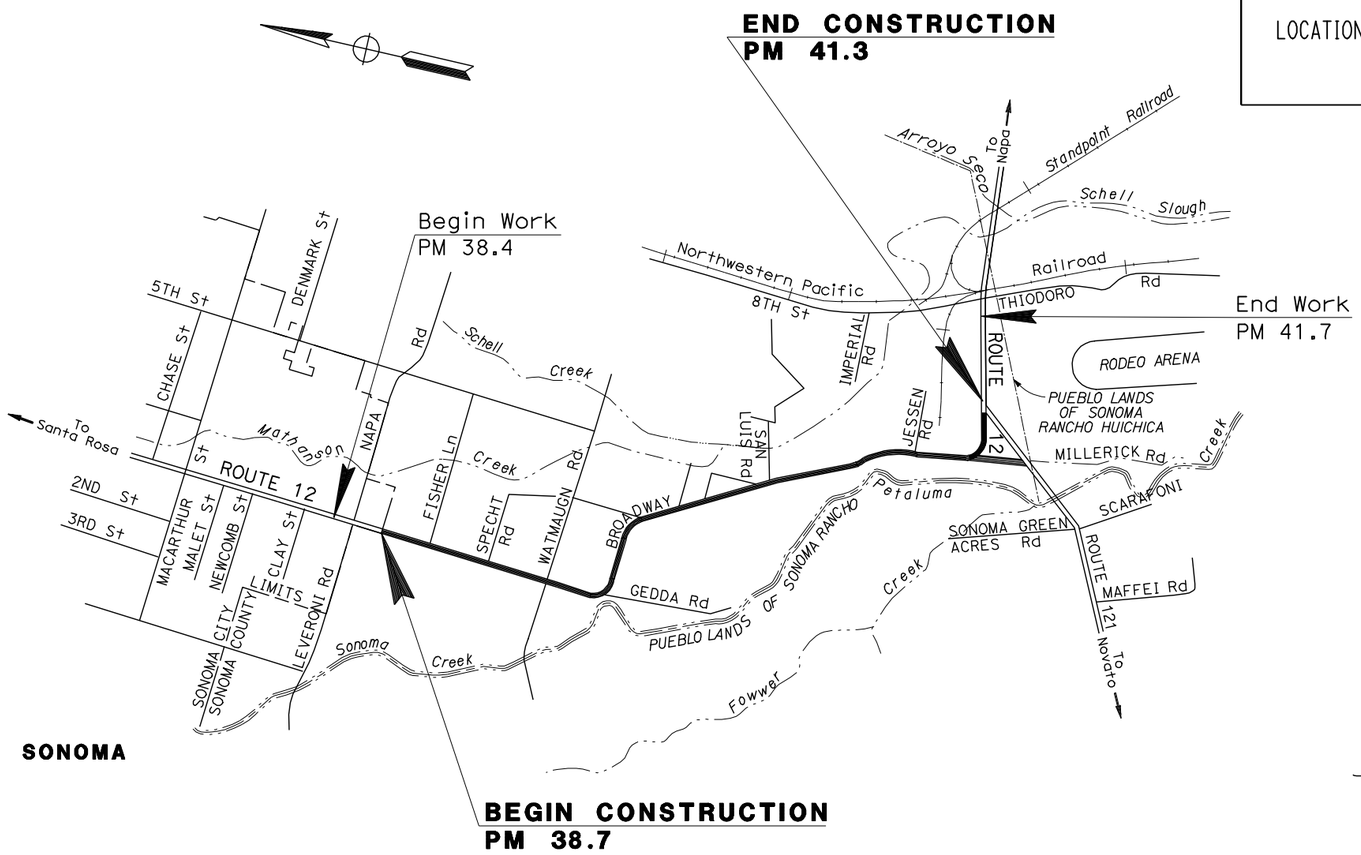

NO SCALE

THE CONTRACTOR SHALL POSSESS THE CLASS (OR CLASSES) OF LICENSE AS SPECIFIED IN THE "NOTICE TO BIDDERS."

PROJECT MANAGER: RAMSES SARGISS

DESIGN ENGINEER: RONNIE CHUA

1/26/12
PROJECT ENGINEER DATE
REGISTERED CIVIL ENGINEER

REGISTERED PROFESSIONAL ENGINEER — Terek Naward — No. 66808 — Exp. 9-30-12 — CIVIL — STATE OF CALIFORNIA

January 30, 2012
PLANS APPROVAL DATE

THE STATE OF CALIFORNIA OR ITS OFFICERS OR AGENTS SHALL NOT BE RESPONSIBLE FOR THE ACCURACY OR COMPLETENESS OF SCANNED COPIES OF THIS PLAN SHEET.

CONTRACT No.	04-2E5904
PROJECT ID	0400021217

LAST REVISION 01-27-12 — DATE PLOTTED => 31-JAN-2012 — TIME PLOTTED => 11:27

NOTES

1. FOR COMPLETE RIGHT OF WAY DATA, CONTACT RIGHT OF WAY ENGINEERING AT THE DISTRICT OFFICE.
2. DIMENSIONS OF THE STRUCTURES (STRUCTURAL SECTIONS) ARE SUBJECT TO TOLERANCES SPECIFIED IN THE STANDARD SPECIFICATIONS.
3. EXISTING UTILITY FACILITIES ARE NOT PLOTTED ON THESE PLANS.
4. CONTRACTOR IS RESPONSIBLE TO PROVIDE POSITIVE DRAINAGE FROM ALL ROADWAY AREA AT ALL TIMES.

Dist	COUNTY	ROUTE	POST MILES TOTAL PROJECT	SHEET No.	TOTAL SHEETS
04	Son	12	38.7/41.3	2	9

REGISTERED CIVIL ENGINEER 1/26/12 DATE

1-30-12
PLANS APPROVAL DATE

REGISTERED PROFESSIONAL ENGINEER Terek Naward No. 66808 Exp. 9-30-12 CIVIL STATE OF CALIFORNIA

THE STATE OF CALIFORNIA OR ITS OFFICERS OR AGENTS SHALL NOT BE RESPONSIBLE FOR THE ACCURACY OR COMPLETENESS OF SCANNED COPIES OF THIS PLAN SHEET.

ABBREVIATION

HMA HOT MIX ASPHALT

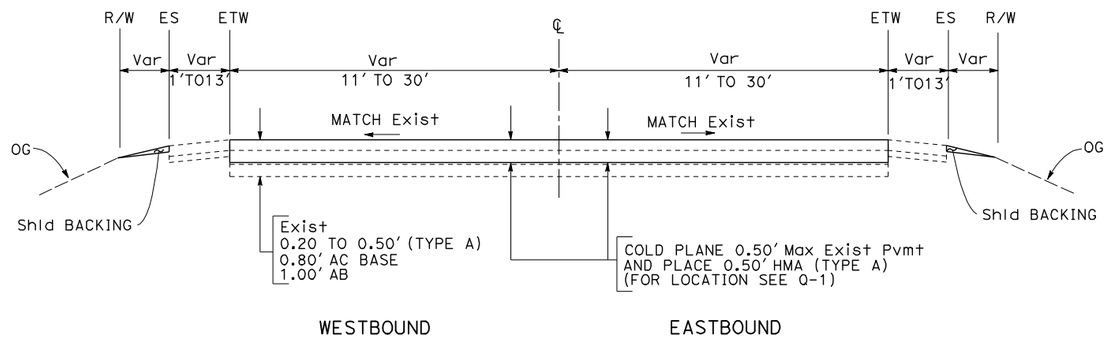

ROUTE 12

TYPICAL CROSS SECTIONS

NO SCALE

X-1

STATE OF CALIFORNIA - DEPARTMENT OF TRANSPORTATION
Caltrans® DESIGN

FUNCTIONAL SUPERVISOR: RONNIE CHUA

CALCULATED-DESIGNED BY: TEREK NAWARD
CHECKED BY: RONNIE CHUA

REVISED BY: TN
DATE REVISED: 1/26/12

LAST REVISION 01-27-12
DATE PLOTTED => 31-JAN-2012
TIME PLOTTED => 11:27

Dist	COUNTY	ROUTE	POST MILES TOTAL PROJECT	SHEET No.	TOTAL SHEETS
04	Son	12	38.7/41.3	3	9

REGISTERED CIVIL ENGINEER 1/26/12 DATE

1-30-12
PLANS APPROVAL DATE

REGISTERED PROFESSIONAL ENGINEER Jerilyn L. Struven No. 49964 Exp. 12-31-12 CIVIL STATE OF CALIFORNIA

THE STATE OF CALIFORNIA OR ITS OFFICERS OR AGENTS SHALL NOT BE RESPONSIBLE FOR THE ACCURACY OR COMPLETENESS OF SCANNED COPIES OF THIS PLAN SHEET.

STATIONARY MOUNTED CONSTRUCTION AREA SIGNS

SIGN No.	SIGN CODE	MESSAGE	PANEL SIZE	NUMBER OF POSTS AND SIZE	No. OF SIGNS
A	W20-1	ROAD WORK AHEAD	36" x 36"	1 - 4" x 6"	3
B	G20-2	END WORK AHEAD	36" x 18"	1 - 4" x 4"	3
C	C40(CA)	TRAFFIC FINES DOUBLED IN CONSTRUCTION ZONES	72" x 36"	2 - 4" x 6"	3

NOTE

EXACT LOCATION AND POSITION OF SIGNS TO BE DETERMINED BY THE ENGINEER.

LEGEND

A CONSTRUCTION AREA SIGN LETTER

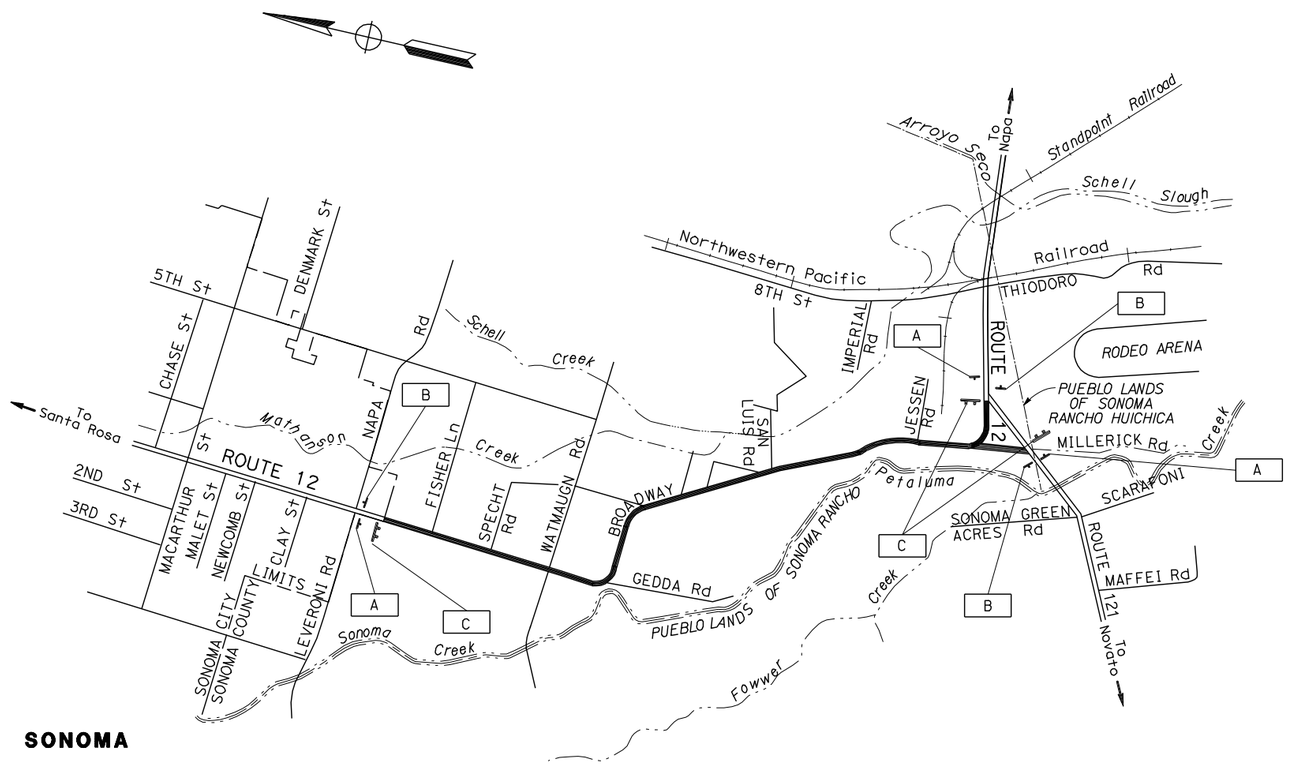

CONSTRUCTION AREA SIGNS

NO SCALE

CS-1

APPROVED FOR CONSTRUCTION AREA SIGN WORK ONLY

REVISED BY	HT
DATE REVISED	1/26/12
HENRY TAM	
JERILYN STRUVEN	
CALCULATED-DESIGNED BY	
CHECKED BY	
FUNCTIONAL SUPERVISOR	
ROLAND AU-YEUNG	

STATE OF CALIFORNIA - DEPARTMENT OF TRANSPORTATION
Caltrans
DESIGN

LAST REVISION 01-27-12
DATE PLOTTED => 31-JAN-2012
TIME PLOTTED => 11:27

NOTE

ALL EXISTING PAVEMENT DELINEATION REMOVE SHALL BE REPLCAED AT THE SME LOCATION AS EXISTING.

Dist	COUNTY	ROUTE	POST MILES TOTAL PROJECT	SHEET No.	TOTAL SHEETS
04	Son	12	38.7/41.3	4	9

REGISTERED CIVIL ENGINEER 1/26/12 DATE

PLANS APPROVAL DATE 1-30-12

REGISTERED PROFESSIONAL ENGINEER Terek Naward No. 66808 Exp. 9-30-12 CIVIL STATE OF CALIFORNIA

THE STATE OF CALIFORNIA OR ITS OFFICERS OR AGENTS SHALL NOT BE RESPONSIBLE FOR THE ACCURACY OR COMPLETENESS OF SCANNED COPIES OF THIS PLAN SHEET.

TRAFFIC STRIPES, PAVEMENT MARKINGS AND PAVEMENT MARKERS

POST MILE		DETAIL No.	THERMOPLASTIC TRAFFIC STRIPE 4" WHITE	THERMOPLASTIC TRAFFIC STRIPE 4" YELLOW	THERMOPLASTIC TRAFFIC STRIPE 8" WHITE	PAVEMENT MARKER (RETRO-REFLECTIVE)	THERMOPLASTIC PAVEMENT MARKING	REMOVE PAVEMENT MARKER
			LF			TYPE D	SQFT	EA
38.787 TO 39.216	11′ L+, R+	27B	4530					
	CENTER LINE	22		3544		95		95
	CENTER	32		1680		88	84	88
39.216 TO 39.759	11′ L+, R+	27B	2867					
	CENTER LINE	22		5734	200	240	84	240
39.840 TO 40.400	11′, R+	27B	5914					
	CENTER LINE	22		5914		247		247
40.531 TO 40.540	11′, R+	27B	48					
	CENTER LINE	22		95		5		5
40.802 TO 41.817	11′, R+	27B	158					
	CENTER LINE	22		158		8		8
41.178 TO 41.192	11′, R+	27B	148					
	CENTER LINE	22		148		7		7
41.242 TO 41.300	12′L+, R+	27B	612					
	CENTER LINE	22		612	12	27	22	27
SUBTOTAL			14277	17855	212	717	190	717
TOTAL			32163		212	717	190	717

PAVEMENT DELINEATION QUANTITIES

PDQ-1

STATE OF CALIFORNIA - DEPARTMENT OF TRANSPORTATION

Caltrans® **DESIGN**

FUNCTIONAL SUPERVISOR: RONNIE CHUA

CALCULATED-DESIGNED BY: TEREK NAWARD

CHECKED BY: RONNIE CHUA

REVISED BY: TN

DATE REVISED: 1/26/12

LAST REVISION 01-27-12

DATE PLOTTED => 31-JAN-2012
TIME PLOTTED => 11:27

Dist	COUNTY	ROUTE	POST MILES TOTAL PROJECT	SHEET No.	TOTAL SHEETS
04	Son	12	38.7/41.3	5	9

REGISTERED CIVIL ENGINEER 1/26/12 DATE

1-30-12
PLANS APPROVAL DATE

REGISTERED PROFESSIONAL ENGINEER Terek Naward No. 66808 Exp. 9-30-12 CIVIL STATE OF CALIFORNIA

THE STATE OF CALIFORNIA OR ITS OFFICERS OR AGENTS SHALL NOT BE RESPONSIBLE FOR THE ACCURACY OR COMPLETENESS OF SCANNED COPIES OF THIS PLAN SHEET.

CRACK TREATMENT

PM	LNMI
38.70 TO 41.30	3

SHOULDER BACKING

PM	TON
38.700 TO 41.300	130

ROADWAY QUANTITIES (MAINLINE)
COLDPLANE ASPHALT CONCRETE PAVEMENT (0.5' Max)

PM	DIRECTION	WIDTH	LENGTH	DEPTH	COLD PLANE ASPHALT CONCRETE PAVEMENT (0.5' Max)	HOT MIX ASPHALT (TYPE A)	TACK COAT
		Ft	LF	Ft	SQYD	TON	
38.787 TO 39.216	WB/EB	11, 11	2300	0.5	5622	1898	2.12
39.216 TO 39.759	EB	0, 11	1850	0.5	4522	763	0.85
39.840 TO 40.400	WB/EB	11, 11	3000	0.5	7333	2475	2.77
40.531 TO 40.540	EB	0, 11	50	0.5	61	21	0.02
40.802 TO 40.817	EB	0, 11	80	0.5	98	33	0.04
41.178 TO 41.192	WB/EB	11, 11	80	0.5	196	66	0.07
41.242 TO 41.30	CONNECTOR TO ROUTE 121	12, 12	300	0.5	800	270	0.30
TOTAL					18632	5525	6.20

SUMMARY OF QUANTITIES

Q-1

TN	REVISED BY	TEREK NAWARD
1/26/12	DATE REVISED	RONNIE CHUA
	CALCULATED-DESIGNED BY	
	CHECKED BY	
	FUNCTIONAL SUPERVISOR	
	RONNIE CHUA	

STATE OF CALIFORNIA - DEPARTMENT OF TRANSPORTATION
Caltrans® DESIGN

LAST REVISION 01-27-12 DATE PLOTTED => 31-JAN-2012 TIME PLOTTED => 11:28

DIST	COUNTY	ROUTE	POST MILES TOTAL PROJECT	SHEET NO.	TOTAL SHEETS
04	Son	12	38.7/41.3	6	9

Randell D. Hiatt
REGISTERED CIVIL ENGINEER

June 6, 2008
PLANS APPROVAL DATE

REGISTERED PROFESSIONAL ENGINEER
Randell D. Hiatt
No. C50200
Exp. 6-30-09
CIVIL
STATE OF CALIFORNIA

The State of California or its officers or agents shall not be responsible for the accuracy or completeness of electronic copies of this plan sheet.

To accompany plans dated 1-30-12

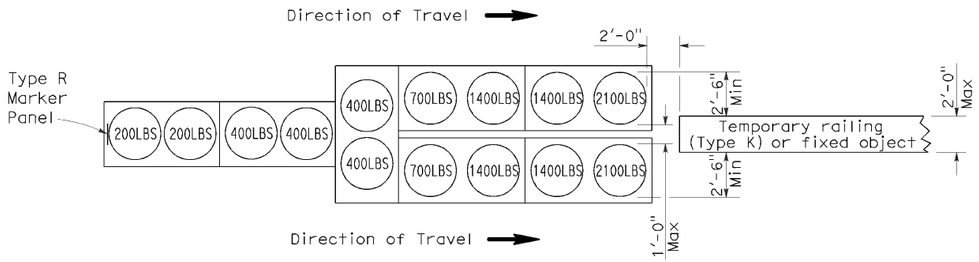

ARRAY 'TU14'

Approach speed 45 mph or more

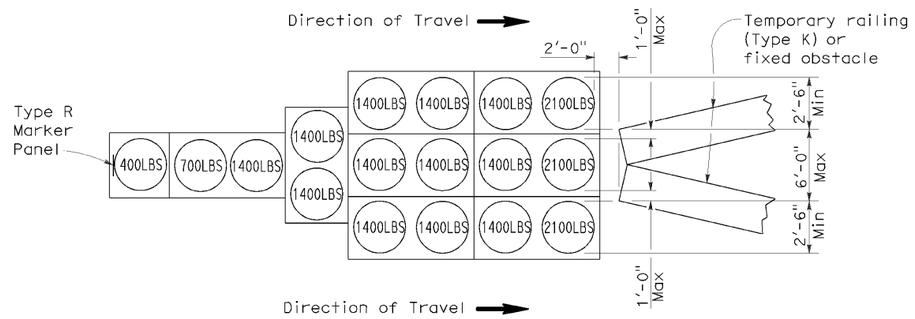

ARRAY 'TU17'

Approach speed less than 45 mph

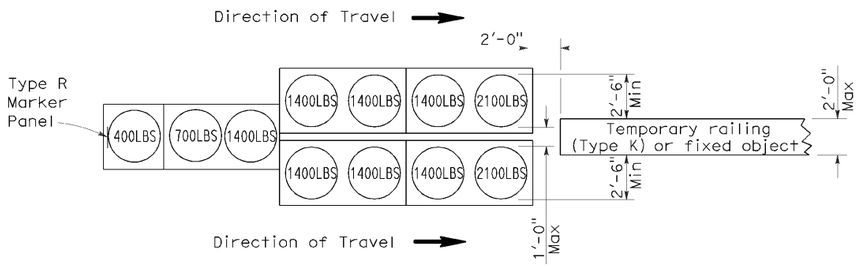

ARRAY 'TU11'

Approach speed less than 45 mph

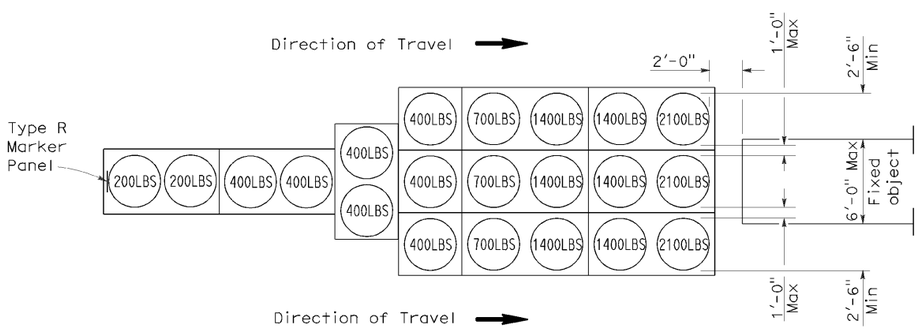

ARRAY 'TU21'

Approach speed 45 mph or more

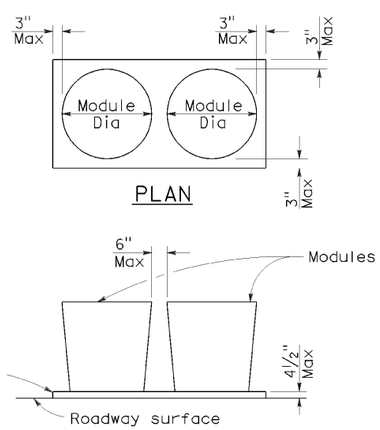

ELEVATION

CRASH CUSHION PALLET DETAIL

See Note 7

NOTES:

1. (XXX) Indicates sand filled module location and weight of sand in pounds for each module. Module spacing is based on the greater diameter of the module.
2. All sand weights are nominal.
3. Temporary crash cushion arrays shall not encroach on the traveled way.
4. Place the top of Type R marker panel 1" below the module lid.
5. Refer to Standard Plan A73B for marker details.
6. Approach speeds indicated conform to NCHRP 350 Report criteria.
7. Use of pallets is optional.

STATE OF CALIFORNIA
DEPARTMENT OF TRANSPORTATION

TEMPORARY CRASH CUSHION, SAND FILLED (UNIDIRECTIONAL)

NO SCALE

RSP T1A DATED JUNE 6, 2008 SUPERSEDES STANDARD PLAN T1A
DATED MAY 1, 2006 - PAGE 211 OF THE STANDARD PLANS BOOK DATED MAY 2006.

REVISED STANDARD PLAN RSP T1A

2006 REVISED STANDARD PLAN RSP T1A

5-15-08

DIST	COUNTY	ROUTE	POST MILES TOTAL PROJECT	SHEET NO.	TOTAL SHEETS
04	Son	12	38.7/41.3	7	9

Randell D. Hiatt
REGISTERED CIVIL ENGINEER

June 6, 2008
PLANS APPROVAL DATE

REGISTERED PROFESSIONAL ENGINEER
Randell D. Hiatt
No. C50200
Exp. 6-30-09
CIVIL
STATE OF CALIFORNIA

The State of California or its officers or agents shall not be responsible for the accuracy or completeness of electronic copies of this plan sheet.

To accompany plans dated 1-30-12

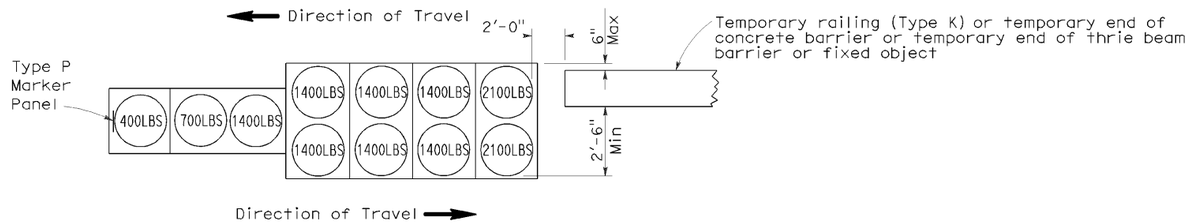

ARRAY 'TB11'

Approach speed less than 45 mph

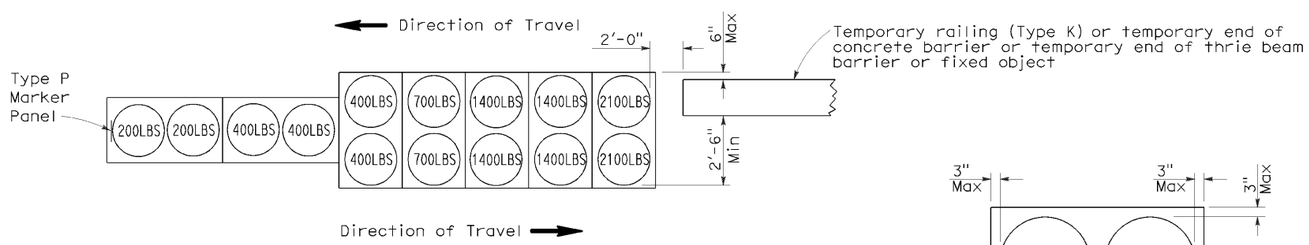

ARRAY 'TB14'

Approach speed 45 mph or more

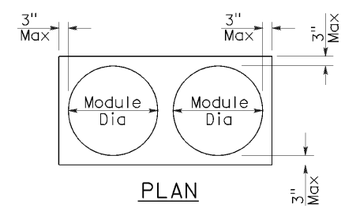

PLAN

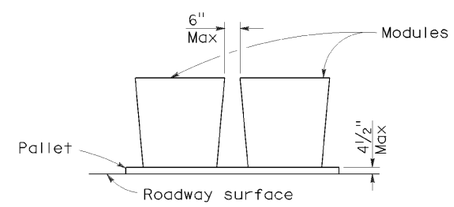

ELEVATION

CRASH CUSHION PALLET DETAIL

See Note 7

NOTES:

1. (XXX) Indicates sand filled module location and weight of sand in pounds for each module. Module spacing is based on the greater diameter of the module.
2. All sand weights are nominal.
3. Temporary crash cushion arrays shall not encroach on the traveled way.
4. Place the Type P marker panel so that the bottom of the panel rests upon the pallet.
5. Refer to Standard Plan A73B for marker details.
6. Approach speeds indicated conform to NCHRP 350 Report criteria.
7. Use of pallets is optional.

STATE OF CALIFORNIA
DEPARTMENT OF TRANSPORTATION

TEMPORARY CRASH CUSHION, SAND FILLED (BIDIRECTIONAL)

NO SCALE

RSP T1B DATED JUNE 6, 2008 SUPERSEDES STANDARD PLAN T1B
DATED MAY 1, 2006 - PAGE 212 OF THE STANDARD PLANS BOOK DATED MAY 2006.

REVISED STANDARD PLAN RSP T1B

2006 REVISED STANDARD PLAN RSP T1B

5-15-08

DIST	COUNTY	ROUTE	POST MILES TOTAL PROJECT	SHEET NO.	TOTAL SHEETS
04	Son	12	38.7/41.3	8	9

Randell D. Hiatt
REGISTERED CIVIL ENGINEER

June 6, 2008
PLANS APPROVAL DATE

REGISTERED PROFESSIONAL ENGINEER
Randell D. Hiatt
No. C50200
Exp. 6-30-09
CIVIL
STATE OF CALIFORNIA

The State of California or its officers or agents shall not be responsible for the accuracy or completeness of electronic copies of this plan sheet.

To accompany plans dated 1-30-12

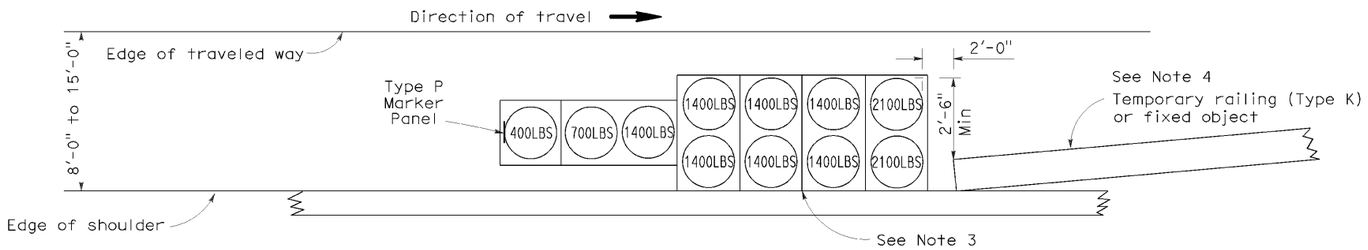

ARRAY 'TS11'

Approach speed less than 45 mph
See Note 9

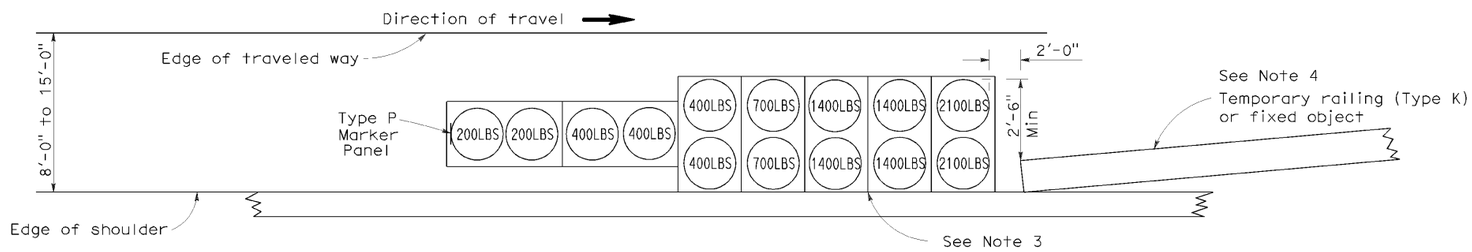

ARRAY 'TS14'

Approach speed 45 mph or more
See Note 9

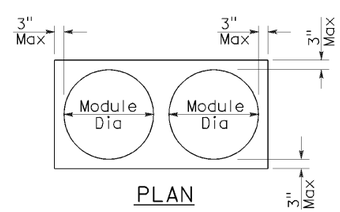

PLAN

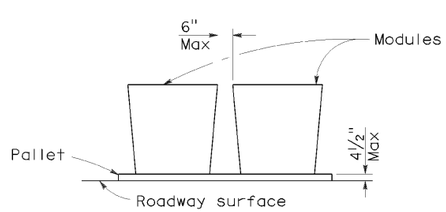

ELEVATION

CRASH CUSHION PALLET DETAIL

See Note 11

NOTES:

1. (XXX) Indicates sand filled module location and weight of sand in pounds for each module. Module spacing is based on the greater diameter of the module.
2. All sand weights are nominal.
3. The temporary crash cushion arrays shown on this plan shall be used only in locations where there will be traffic on one side of the temporary crash cushion array.
4. If the fixed object or approach end of the temporary railing is less than 15'-0" from the edge of traveled way, a temporary crash cushion is required in a construction or work zone.
5. Temporary crash cushion arrays shall not encroach on the traveled way.
6. Arrays for median shoulders shall conform to details shown on this plan for outside shoulders.
7. Place the Type P marker panel so that the bottom of the panel rests upon the pallet and faces traffic.
8. Refer to Standard Plan A73B for marker details.
9. For shoulder widths less than 8'-0", appropriate approved crash cushion protection, other than sand filled modules, shall be provided at fixed objects and at approach ends of temporary railing. The specific type of crash cushion shall be as shown on the project plans or as specified in the Special Provisions, or if not shown on the project plans or specified in the Special Provisions, shall be as approved by the Engineer.
10. Approach speeds indicated conform to NCHRP 350 Report criteria.
11. Use of pallets is optional.

STATE OF CALIFORNIA
DEPARTMENT OF TRANSPORTATION

TEMPORARY CRASH CUSHION, SAND FILLED (SHOULDER INSTALLATIONS)

NO SCALE

RSP T2 DATED JUNE 6, 2008 SUPERSEDES STANDARD PLAN T2
DATED MAY 1, 2006 - PAGE 213 OF THE STANDARD PLANS BOOK DATED MAY 2006.

REVISED STANDARD PLAN RSP T2

2006 REVISED STANDARD PLAN RSP T2

5-15-08

Dist	COUNTY	ROUTE	POST MILES TOTAL PROJECT	SHEET No.	TOTAL SHEETS
04	Son	12	38.7/41.3	9	9

Randell D. Hiatt
REGISTERED CIVIL ENGINEER

May 20, 2011
PLANS APPROVAL DATE

REGISTERED PROFESSIONAL ENGINEER
Randell D. Hiatt
No. C50200
Exp. 6-30-11
CIVIL
STATE OF CALIFORNIA

The State of California or its officers or agents shall not be responsible for the accuracy or completeness of electronic copies of this plan sheet.

To accompany plans dated 1-30-12

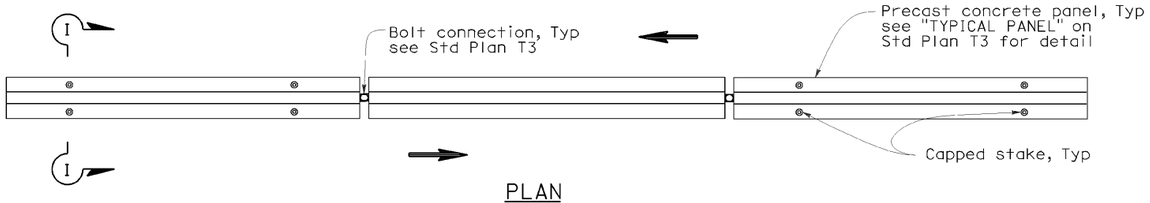

PLAN

RAILING STAKING CONFIGURATION FOR TWO-WAY TRAFFIC

See Note 1

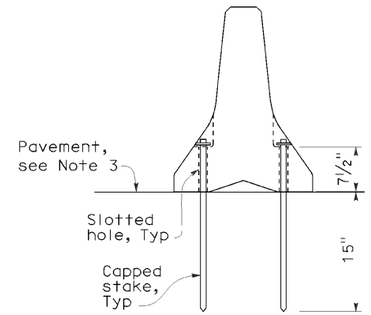

SECTION I-I

NOTES:

1. Where Type K Temporary Railing is placed as a temporary or long term barrier in two-way traffic on highways with less than 24" from the edge of traveled way, use four capped stakes per every other panel with end panels staked.
2. Where Type K Temporary Railing is placed 3" to 24" from the edge of an excavation on highways, use two capped stakes per panel along the traffic side.
3. Staked Type K Temporary Railing must be supported by at least 4" thick concrete, hot mix asphalt or existing asphalt concrete pavement.
4. The minimum yield strength for the washer must be 60,000 psi.
5. Direction of adjacent traffic indicated by ⟹.

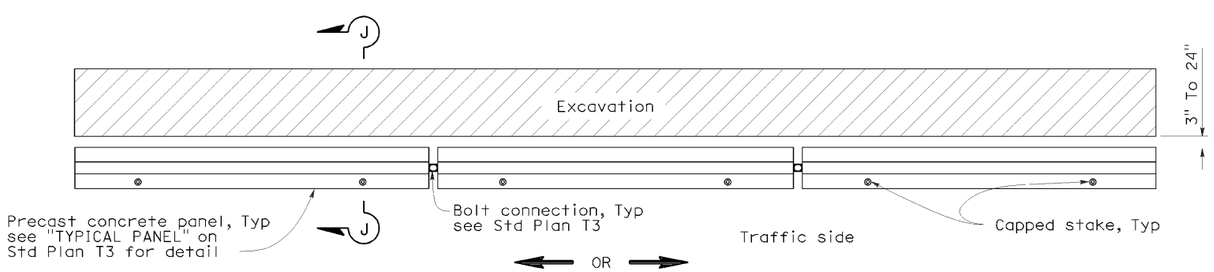

PLAN

RAILING STAKING CONFIGURATION ADJACENT TO AN EXCAVATION

See Note 2

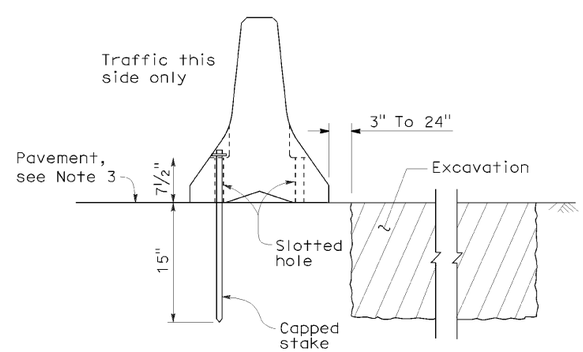

SECTION J-J

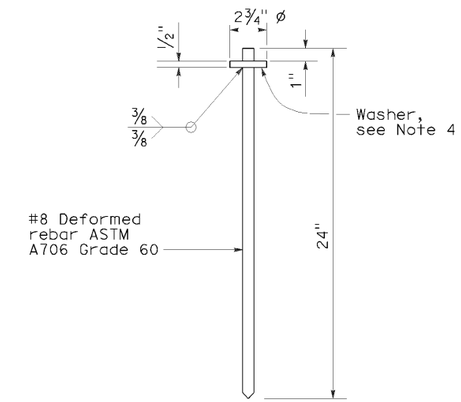

CAPPED STAKE DETAIL

STATE OF CALIFORNIA
DEPARTMENT OF TRANSPORTATION

TEMPORARY RAILING (TYPE K)

NO SCALE

NSP T3A DATED MAY 20, 2011 SUPPLEMENTS
THE STANDARD PLANS BOOK DATED MAY 2006.

NEW STANDARD PLAN NSP T3A

2006 NEW STANDARD PLAN NSP T3A

8-31-10