Dist	COUNTY	ROUTE	POST MILES TOTAL PROJECT	SHEET No.	TOTAL SHEETS
04	SM	1	0.0/3.3	1	16

INDEX OF PLANS

SHEET No.	DESCRIPTION
1	TITLE SHEET AND LOCATION MAP
2	TYPICAL CROSS SECTIONS
3 & 4	CONSTRUCTION DETAILS
5	CONSTRUCTION AREA SIGNS
6	PAVEMENT DELINEATION QUANTITIES
7	SUMMARY OF QUANTITIES
8 - 16	REVISED AND NEW STANDARD PLANS

THE STANDARD PLANS LIST APPLICABLE TO THIS CONTRACT IS INCLUDED IN THE NOTICE TO BIDDERS AND SPECIAL PROVISIONS BOOK.

STATE OF CALIFORNIA

DEPARTMENT OF TRANSPORTATION

PROJECT PLANS FOR CONSTRUCTION ON

STATE HIGHWAY

IN SAN MATEO COUNTY
FROM SANTA CRUZ/SAN MATEO COUNTY LINE
TO 0.6 MILE NORTH OF CHAULK ROAD

TO BE SUPPLEMENTED BY STANDARD PLANS DATED MAY 2006

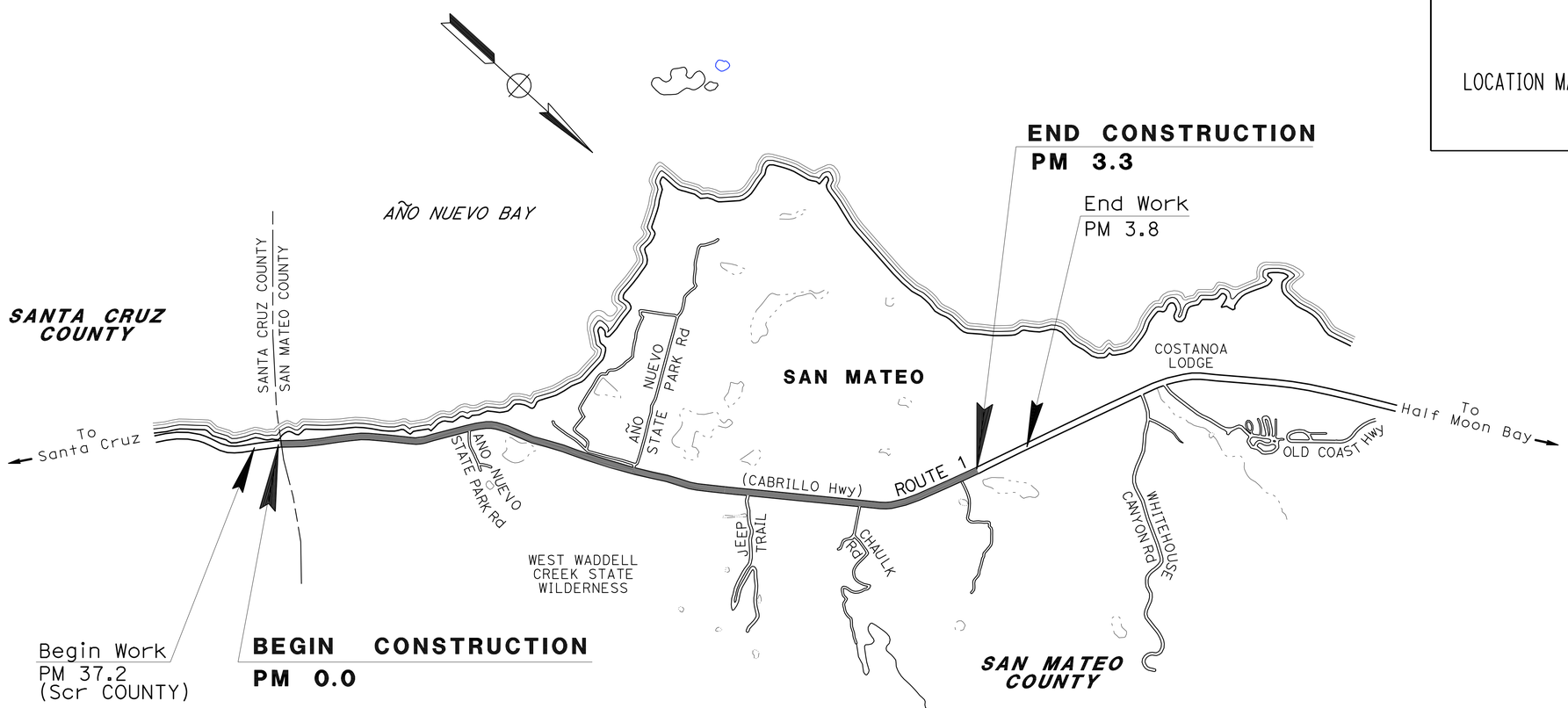

LOCATION MAP

PROJECT MANAGER: RAMSES SARGISS

DESIGN ENGINEER: RONNIE CHUA

10/17/11
PROJECT ENGINEER DATE
REGISTERED CIVIL ENGINEER

REGISTERED PROFESSIONAL ENGINEER
Ba Nhu Nguyen
No. 64527
Exp. 6-30-13
CIVIL
STATE OF CALIFORNIA

December 12, 2011
PLANS APPROVAL DATE

THE STATE OF CALIFORNIA OR ITS OFFICERS OR AGENTS SHALL NOT BE RESPONSIBLE FOR THE ACCURACY OR COMPLETENESS OF SCANNED COPIES OF THIS PLAN SHEET.

THE CONTRACTOR SHALL POSSESS THE CLASS (OR CLASSES) OF LICENSE AS SPECIFIED IN THE "NOTICE TO BIDDERS."

NO SCALE

CONTRACT No.	04-2E4904
PROJECT ID	0400021043

LAST REVISION 12-12-11

DATE PLOTTED => 18-JAN-2012
TIME PLOTTED => 08:11

Dist	COUNTY	ROUTE	POST MILES TOTAL PROJECT	SHEET No.	TOTAL SHEETS
04	SM	1	0.0/3.3	2	16

REGISTERED CIVIL ENGINEER 10/17/11 DATE

12-12-11
PLANS APPROVAL DATE

REGISTERED PROFESSIONAL ENGINEER Ba Nhu Nguyen No. 64527 Exp. 6-30-13 CIVIL STATE OF CALIFORNIA

THE STATE OF CALIFORNIA OR ITS OFFICERS OR AGENTS SHALL NOT BE RESPONSIBLE FOR THE ACCURACY OR COMPLETENESS OF SCANNED COPIES OF THIS PLAN SHEET.

NOTES

1. FOR ACCURATE RIGHT OF WAY DATA, CONTACT RIGHT OF WAY ENGINEERING AT THE DISTRICT OFFFICE.
2. DIMENSIONS OF PAVEMENT STRUCTURES (STRUCTURAL SECTIONS) ARE SUBJECT TO TOLERANCES SPECIFIED IN THE STANDARD SPECIFICATIONS.
3. THE EXISTING PAVEMENT DELINEATION WILL BE REPLACED AT THE SAME LOCATION IN KIND.
4. FOR LOCATION AND DIMENSIONS OF COLD PLANE AC PAVEMENT, SEE SHEET Q-1 AND AS DIRECTED BY THE ENGINEER.
5. PRESERVE CENTERLINE RUMBLE STRIP a=22" AT PM 0.7 TO PM 0.8 AND PM 1.36 TO PM 2.85

ABBREVIATIONS

HMA (A) HOT MIX ASPHALT (TYPE A)
RHMA RUBBERIZED HOT MIX ASPHALT

LEGEND

4" YELLOW LINE

TYPICAL PAVEMENT STRUCTURE SECTIONS

1 — 0.10' COLD PLANE AND 0.10' RHMA (GAP GRADED)

2 — 0.35' Max COLD PLANE Exist PAVEMENT
0.35' HMA (A)

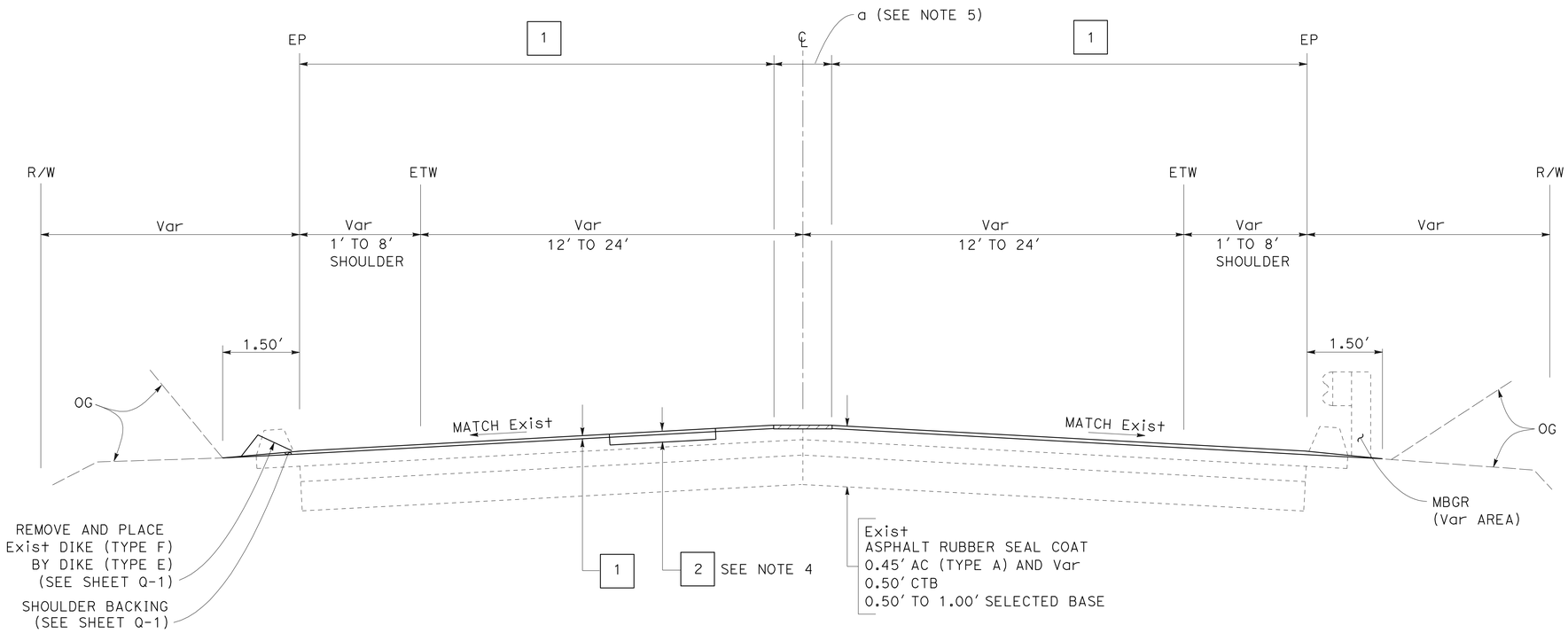

ROUTE 1

TYPICAL CROSS SECTIONS

NO SCALE

X-1

STATE OF CALIFORNIA - DEPARTMENT OF TRANSPORTATION
Caltrans® DESIGN

FUNCTIONAL SUPERVISOR: RONNIE CHUA
CALCULATED-DESIGNED BY: EDMOND SIU
CHECKED BY: RONNIE CHUA
REVISED BY: BA
DATE REVISED: 10/10/11

LAST REVISION 12-12-11
DATE PLOTTED => 18-JAN-2012
TIME PLOTTED => 08:11

Dist	COUNTY	ROUTE	POST MILES TOTAL PROJECT	SHEET No.	TOTAL SHEETS
04	SM	1	0.0/3.3	3	16

REGISTERED CIVIL ENGINEER 10/17/11 DATE

12-12-11
PLANS APPROVAL DATE

REGISTERED PROFESSIONAL ENGINEER
Ba Nhu Nguyen
No. 64527
Exp. 6-30-13
CIVIL
STATE OF CALIFORNIA

THE STATE OF CALIFORNIA OR ITS OFFICERS OR AGENTS SHALL NOT BE RESPONSIBLE FOR THE ACCURACY OR COMPLETENESS OF SCANNED COPIES OF THIS PLAN SHEET.

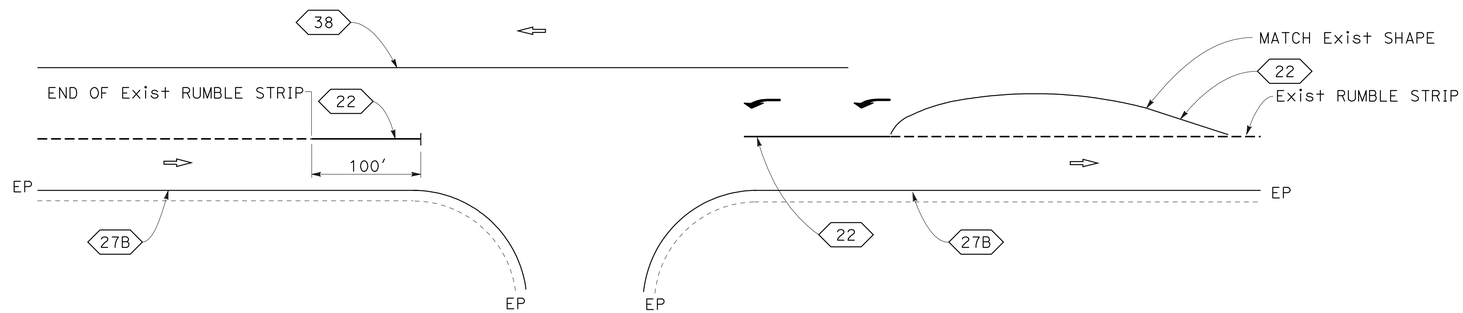

CASE 1

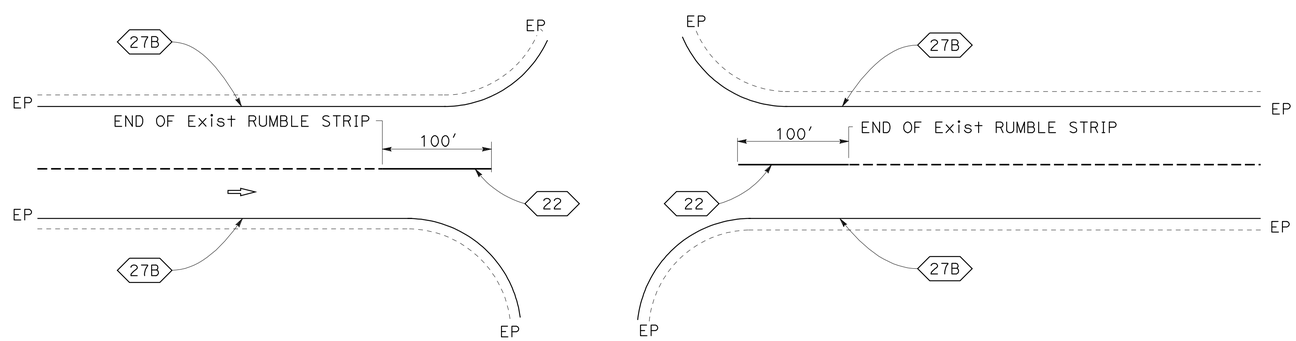

CASE 2

INTERSECTION DETAILS

CONSTRUCTION DETAILS

NO SCALE

C-1

BA	10/10/11
REVISED BY	DATE REVISED
EDMOND SIU	RONNIE CHUA
CALCULATED-DESIGNED BY	CHECKED BY
FUNCTIONAL SUPERVISOR	RONNIE CHUA

STATE OF CALIFORNIA - DEPARTMENT OF TRANSPORTATION
Caltrans® DESIGN

LAST REVISION 12-12-11
DATE PLOTTED => 18-JAN-2012
TIME PLOTTED => 08:11

Dist	COUNTY	ROUTE	POST MILES TOTAL PROJECT	SHEET No.	TOTAL SHEETS
04	SM	1	0.0/3.3	4	16

REGISTERED CIVIL ENGINEER 10/17/11 DATE

12-12-11
PLANS APPROVAL DATE

REGISTERED PROFESSIONAL ENGINEER
Ba Nhu Nguyen
No. 64527
Exp. 6-30-13
CIVIL
STATE OF CALIFORNIA

THE STATE OF CALIFORNIA OR ITS OFFICERS OR AGENTS SHALL NOT BE RESPONSIBLE FOR THE ACCURACY OR COMPLETENESS OF SCANNED COPIES OF THIS PLAN SHEET.

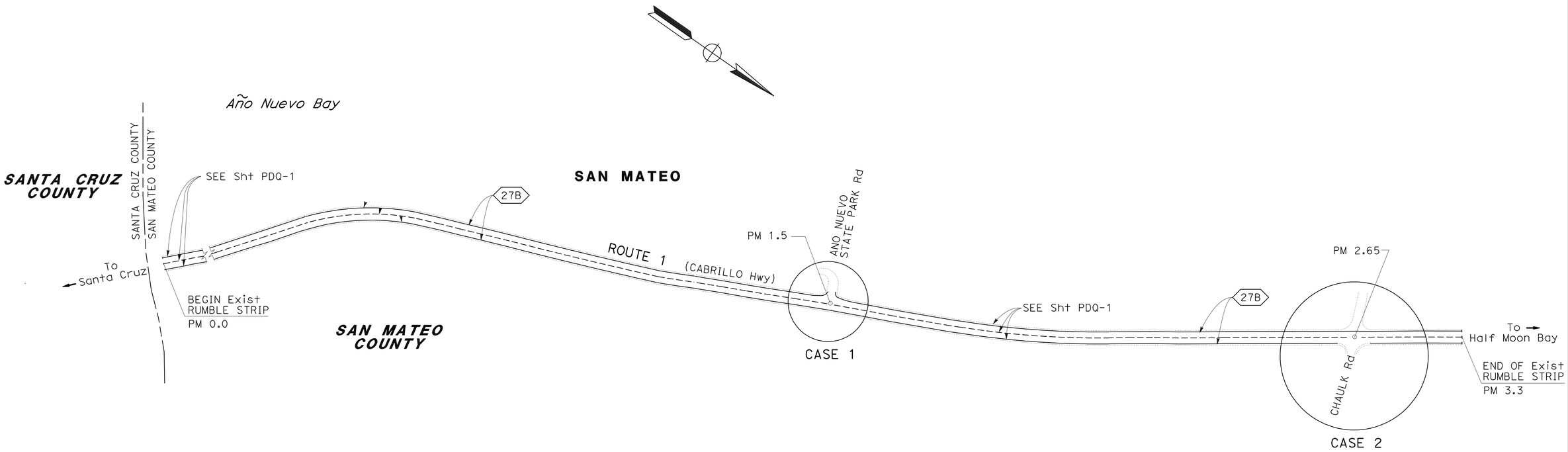

CONSTRUCTION DETAILS

NO SCALE

APPROVED FOR CONSTRUCTION DETAILS WORK ONLY

C-2

BA	10/10/11
REVISED BY	DATE REVISED
EDMOND SIU	RONNIE CHUA
CALCULATED-DESIGNED BY	CHECKED BY
RONNIE CHUA	
FUNCTIONAL SUPERVISOR	

STATE OF CALIFORNIA - DEPARTMENT OF TRANSPORTATION
Caltrans DESIGN

LAST REVISION 12-12-11 | DATE PLOTTED => 18-JAN-2012 | TIME PLOTTED => 08:11

Dist	COUNTY	ROUTE	POST MILES TOTAL PROJECT	SHEET No.	TOTAL SHEETS
04	SM	1	0.0/3.3	5	16

REGISTERED CIVIL ENGINEER 10/17/11 DATE

12-12-11
PLANS APPROVAL DATE

REGISTERED PROFESSIONAL ENGINEER J.L. Struven No. 49964 Exp. 12-31-12 CIVIL STATE OF CALIFORNIA

THE STATE OF CALIFORNIA OR ITS OFFICERS OR AGENTS SHALL NOT BE RESPONSIBLE FOR THE ACCURACY OR COMPLETENESS OF SCANNED COPIES OF THIS PLAN SHEET.

STATIONARY MOUNTED CONSTRUCTION AREA SIGNS

SIGN No.	SIGN CODE	PANEL SIZE	SIGN MESSAGE	NUMBER OF POSTS AND SIZE	NUMBER OF SIGNS
1	W20-1	48" x 48"	ROAD WORK AHEAD	1 - 4" x 6"	6
2	G20-2	48" x 24"	END ROAD WORK	1 - 4" x 4"	6

NOTE

LOCATION OF CONSTRUCTION AREA SIGNS ARE APPROXIMATE. EXACT LOCATIONS WILL BE DETERMINED BY THE ENGINEER.

LEGEND

No. CONSTRUCTION AREA SIGN NUMBER.

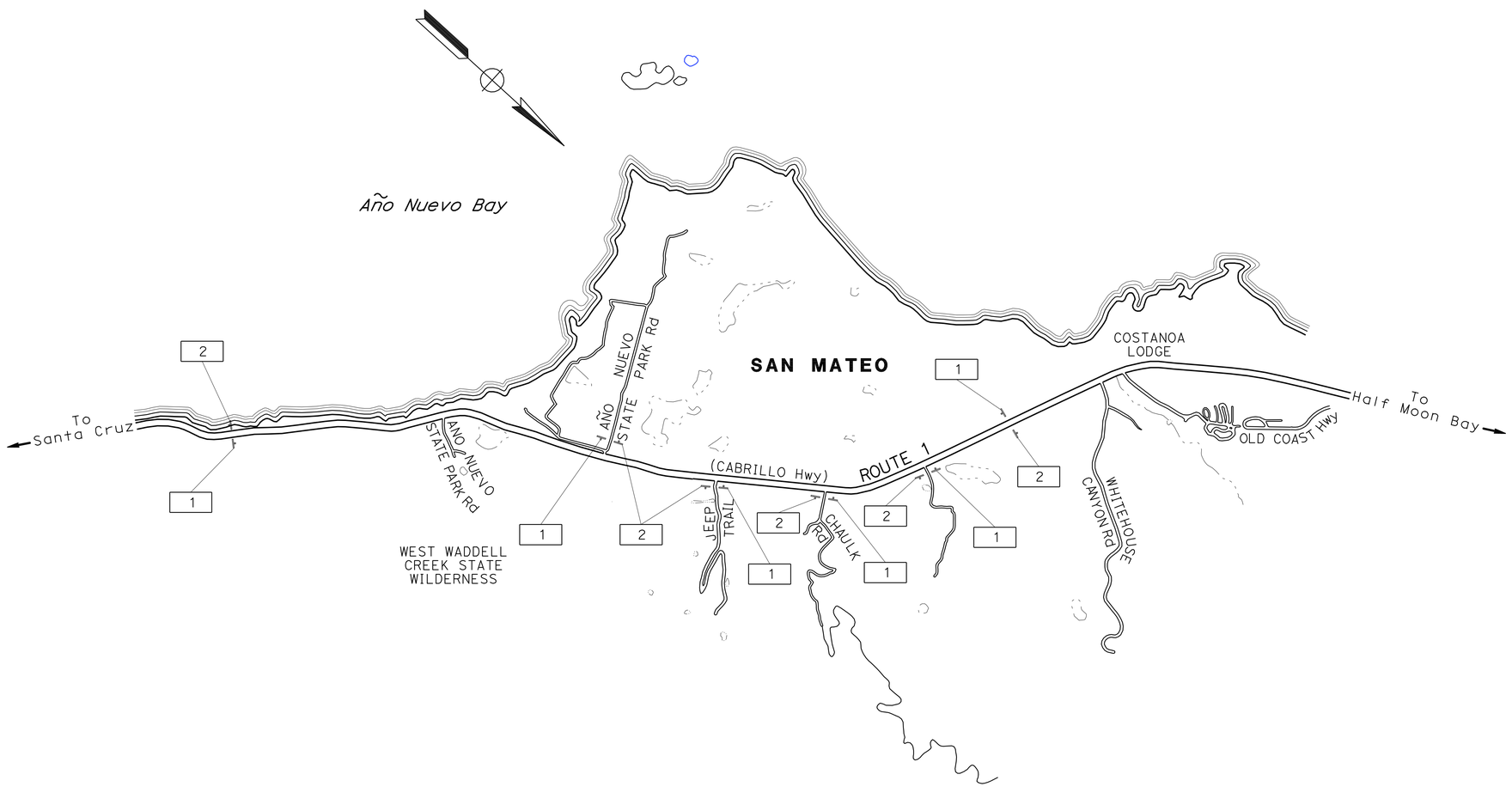

CONSTRUCTION AREA SIGNS

NO SCALE

CS-1

STATE OF CALIFORNIA - DEPARTMENT OF TRANSPORTATION
Caltrans TRAFFIC

FUNCTIONAL SUPERVISOR: RONALD AU-YEUNG

CALCULATED-DESIGNED BY: JERILYN STRUVEN 10/17/11
CHECKED BY:

REVISED BY: JS
DATE REVISED: 10/17/11

LAST REVISION 12-12-11 | DATE PLOTTED => 18-JAN-2012 | TIME PLOTTED => 08:11

Dist	COUNTY	ROUTE	POST MILES TOTAL PROJECT	SHEET No.	TOTAL SHEETS
04	SM	1	0.0/3.3	6	16

REGISTERED CIVIL ENGINEER 10/17/11 DATE

12-12-11
PLANS APPROVAL DATE

REGISTERED PROFESSIONAL ENGINEER Ba Nhu Nguyen No. 64527 Exp. 6-30-13 CIVIL STATE OF CALIFORNIA

THE STATE OF CALIFORNIA OR ITS OFFICERS OR AGENTS SHALL NOT BE RESPONSIBLE FOR THE ACCURACY OR COMPLETENESS OF SCANNED COPIES OF THIS PLAN SHEET.

TRAFFIC STRIPES, PAVEMENT MARKINGS AND PAVEMENT MARKERS

PM	DETAIL No. OR PAVEMENT MARKING	THERMOPLASTIC TRAFFIC STRIPE			PAVEMENT MARKERS				THERMOPLASTIC PAVEMENT MARKING	REMOVE PAVEMENT MARKER
		4" YELLOW	4" WHITE	8" WHITE	NONREFLECTIVE	RETROREFLECTIVE				
					TYPE A	TYPE D	TYPE G	TYPE H		
		LF			EA				SQFT	EA
0.0 TO 0.70	5	370								
	27B		7392							
	19	7392				78		155		233
0.70 TO 0.80	27B		1056							
0.80 TO 1.36	6	2957				124				124
	27B		5914							
1.36 TO 1.40	27B		422							
1.40 TO 1.45	27B		528							
1.45 TO 1.48	22	400				21				21
	27B		317							
	38			159			8			8
	TYPE III (L) ARROW								84	
1.48 TO 2.01	27B		5597							
2.01 TO 2.16	13M		792		66	34				100
	27B		1584							
2.16 TO 2.63	13M		2482		207					311
	22	4963				104				312
	27B		5702				312			
	TYPE IV ARROW								168	
2.64 TO 2.85	13M		1109		92	47				139
	22	400				21				21
	27B		1109							
2.85 TO 2.95	19	1056				23		43		57
	27B		1056							
2.95 TO 3.30	6	1848				78				78
	27B		3696							
SUBTOTAL		14422	38016	159		530	8	189	252	
TOTAL		52438		159	365	727			252	1042

PAVEMENT DELINEATION QUANTITIES

PDQ-1

STATE OF CALIFORNIA - DEPARTMENT OF TRANSPORTATION
Caltrans DESIGN

FUNCTIONAL SUPERVISOR: RONNIE CHUA
CALCULATED-DESIGNED BY: EDMOND SIU
CHECKED BY: RONNIE CHUA
REVISED BY: BA
DATE REVISED: 10/10/11

LAST REVISION 12-12-11 | DATE PLOTTED => 18-JAN-2012 | TIME PLOTTED => 08:11

Dist	COUNTY	ROUTE	POST MILES TOTAL PROJECT	SHEET No.	TOTAL SHEETS
04	SM	1	0.0/3.3	7	16

REGISTERED CIVIL ENGINEER 10/17/11 DATE

12-12-11
PLANS APPROVAL DATE

REGISTERED PROFESSIONAL ENGINEER Ba Nhu Nguyen No. 64527 Exp. 6-30-13 CIVIL STATE OF CALIFORNIA

THE STATE OF CALIFORNIA OR ITS OFFICERS OR AGENTS SHALL NOT BE RESPONSIBLE FOR THE ACCURACY OR COMPLETENESS OF SCANNED COPIES OF THIS PLAN SHEET.

PAVEMENT STRUCTURE QUANTITIES

PM	DIRECTION	COLD PLANE AC PAVEMENT (0.35' Max) WIDTH	LENGTH	COLD PLANE AREA	HOT MIX ASPHALT TYPE A	TACK COAT
		LF (N)		SQYD	TON	
0.03	NB	12.00	100.00	133.33	31.50	0.04
0.05		12.00	56.00	74.67	17.64	0.02
0.12		12.00	80.00	106.67	25.20	0.04
0.31		12.00	60.00	80.00	18.90	0.03
0.33		12.00	60.00	80.00	18.90	0.03
0.65		12.00	50.00	66.67	15.75	0.02
1.13		12.00	50.00	66.67	15.75	0.02
1.24		12.00	50.00	66.67	15.75	0.02
1.26		12.00	50.00	66.67	15.75	0.02
1.49		12.00	50.00	66.67	15.75	0.02
1.50		12.00	120.00	160.67	37.80	0.05
1.62		12.00	50.00	66.67	15.75	0.02
1.63		12.00	50.00	66.67	15.75	0.02
1.91		12.00	80.00	106.67	25.20	0.04
1.94		12.00	60.00	80.00	18.90	0.03
2.45		12.00	500.00	666.67	157.50	0.22
2.81		12.00	150.00	200.00	47.25	0.07
3.20		12.00	150.00	200.00	47.25	0.07
3.25		12.00	150.00	200.00	47.25	0.07
0.20	SB	12.00	100.00	133.33	31.50	0.04
0.75		12.00	60.00	80.00	18.90	0.03
0.80		12.00	80.00	106.67	25.20	0.04
0.90		12.00	60.00	80.00	18.90	0.03
1.00		12.00	60.00	80.00	18.90	0.03
1.05		12.00	50.00	66.67	15.75	0.02
1.20		12.00	50.00	66.67	15.75	0.02
1.24		12.00	50.00	66.67	15.75	0.02
1.39		12.00	100.00	133.33	31.50	0.04
1.90		12.00	150.00	200.00	47.25	0.07
2.17		12.00	50.00	66.67	15.75	0.02
2.19		12.00	50.00	66.67	15.75	0.02
2.30		12.00	150.00	200.00	47.25	0.07
2.85		12.00	100.00	133.33	31.50	0.04
2.90		12.00	150.00	200.00	47.25	0.07
3.20		12.00	50.00	66.67	15.75	0.02
3.30		12.00	12.00	16.00	3.78	0.01
TOTAL				4317.33	1019.97	1.44

(N) = NOT A SEPARATE PAY ITEM, FOR INFORMATION ONLY.

PAVEMENT STRUCTURE QUANTITIES

PM	COLD PLANE AC (0.10') PAVEMENT	RUBBERIZED HOT MIX ASPHALT TYPE G	TACK COAT
	SQYD	TON	
0.0 TO 1.0	22176.00	1496.88	7.39
1.0 TO 2.0	22129.10	1493.71	7.38
2.0 TO 2.3	8096.00	546.48	2.70
2.3 TO 3.1	27514.67	1857.24	9.17
3.1 TO 3.3	4458.67	300.96	1.49
TOTAL	84374.40	5695.27	28.12

PAVEMENT STRUCTURE QUANTITIES SUMMARY

PM	COLD PLANE 0.35' AND 0.10' AC PAVEMENT	HOT MIX ASPHALT TYPE A	RUBBERIZED HOT MIX ASPHALT TYPE G	TACK COAT
	SQYD	TON		
	88691.73	1462.59	5695.27	29.56

TEMPORARY FENCE (TYPE ESA)

LOCATION PM	DIRECTION	LF
1.15 TO 1.25	NB	262

SHOULDER BACKING (SB)

PM	LF (N)	TON
0.79	545.00	20.42
0.51	145.00	5.43
0.22	119.00	4.46
0.18	286.00	10.04
TOTAL	1077.00	40.35

CRACK TREATMENT

PM	LNMI
NB/SB	2

HOT MIX ASPHALT DIKE

PM	DIRECTION	DIKE TYPE E	CY (N)	HOT MIX ASPHALT TYPE A
		LF		TON
0.02	NB	400.00	11.72	23.73
0.55	NB	200.00	5.86	11.87
0.87	NB	50.00	1.47	2.97
2.37	NB	200.00	5.86	11.87
2.73	SB	250.00	7.33	14.83
2.47	SB	898.00	26.31	53.28
1.91	SB	220.00	6.45	13.05
1.72	SB	950.00	27.84	56.37
1.49	SB	170.00	4.98	10.09
1.47	SB	170.00	4.98	10.09
0.80	SB	150.00	4.40	8.90
0.57	SB	634.00	18.58	37.62
	SB	3168.00	92.82	187.97
TOTAL		7460.00	218.58	422.62

(N) = NOT A SEPARATE PAY ITEM, FOR INFORMATION ONLY.

SUMMARY OF QUANTITIES

Q-1

REVISED BY	DATE REVISED
BA	10/10/11

EDMOND SIU — RONNIE CHUA

CALCULATED-DESIGNED BY / CHECKED BY

FUNCTIONAL SUPERVISOR: RONNIE CHUA

STATE OF CALIFORNIA - DEPARTMENT OF TRANSPORTATION — Caltrans® DESIGN

LAST REVISION 12-12-11 | DATE PLOTTED => 18-JAN-2012 | TIME PLOTTED => 08:11

DIST	COUNTY	ROUTE	POST MILES TOTAL PROJECT	SHEET NO.	TOTAL SHEETS
04	SM	1	0.0/3.3	8	16

Randell D. Hiatt
REGISTERED CIVIL ENGINEER

June 6, 2008
PLANS APPROVAL DATE

REGISTERED PROFESSIONAL ENGINEER
Randell D. Hiatt
No. C50200
Exp. 6-30-09
CIVIL
STATE OF CALIFORNIA

The State of California or its officers or agents shall not be responsible for the accuracy or completeness of electronic copies of this plan sheet.

To accompany plans dated 12-12-11

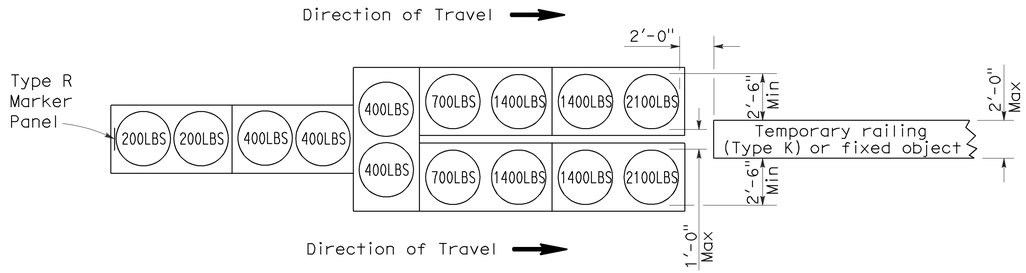

ARRAY 'TU14'

Approach speed 45 mph or more

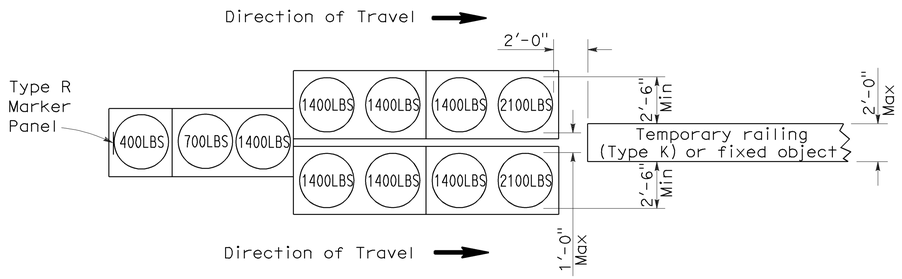

ARRAY 'TU11'

Approach speed less than 45 mph

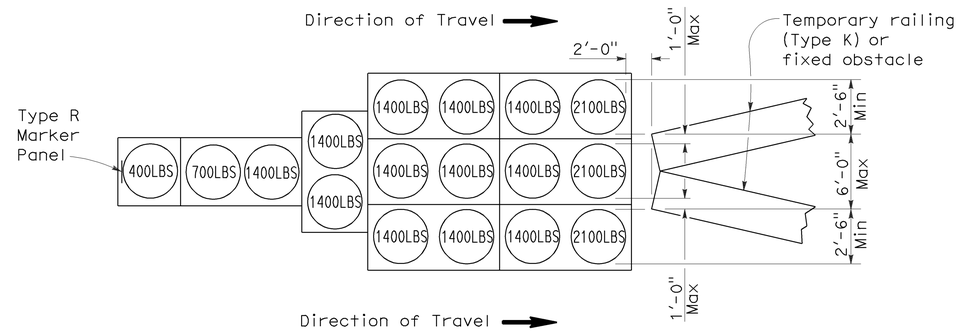

ARRAY 'TU17'

Approach speed less than 45 mph

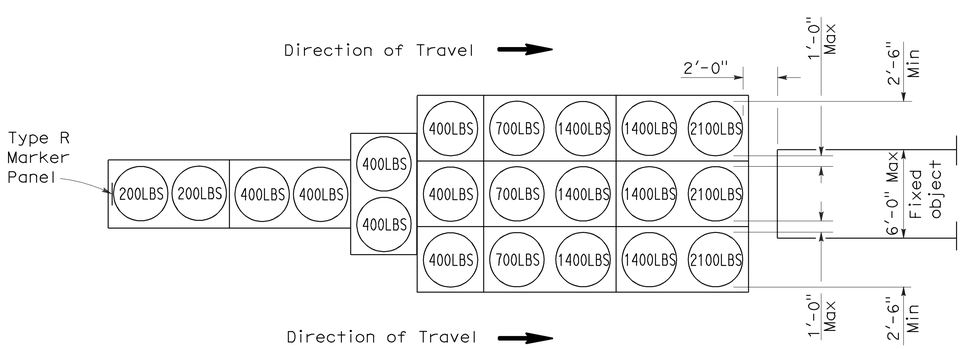

ARRAY 'TU21'

Approach speed 45 mph or more

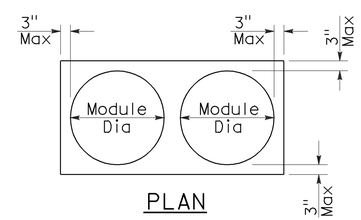

PLAN

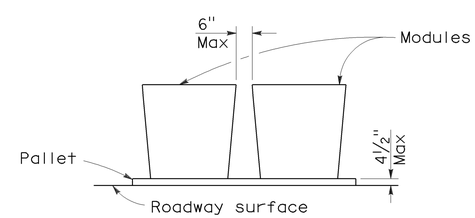

ELEVATION

CRASH CUSHION PALLET DETAIL

See Note 7

NOTES:

1. (XXX) Indicates sand filled module location and weight of sand in pounds for each module. Module spacing is based on the greater diameter of the module.
2. All sand weights are nominal.
3. Temporary crash cushion arrays shall not encroach on the traveled way.
4. Place the top of Type R marker panel 1" below the module lid.
5. Refer to Standard Plan A73B for marker details.
6. Approach speeds indicated conform to NCHRP 350 Report criteria.
7. Use of pallets is optional.

STATE OF CALIFORNIA
DEPARTMENT OF TRANSPORTATION

TEMPORARY CRASH CUSHION, SAND FILLED (UNIDIRECTIONAL)

NO SCALE

RSP T1A DATED JUNE 6, 2008 SUPERSEDES STANDARD PLAN T1A
DATED MAY 1, 2006 - PAGE 211 OF THE STANDARD PLANS BOOK DATED MAY 2006.

REVISED STANDARD PLAN RSP T1A

2006 REVISED STANDARD PLAN RSP T1A

DIST	COUNTY	ROUTE	POST MILES TOTAL PROJECT	SHEET NO.	TOTAL SHEETS
04	SM	1	0.0/3.3	9	16

Randell D. Hiatt
REGISTERED CIVIL ENGINEER

June 6, 2008
PLANS APPROVAL DATE

REGISTERED PROFESSIONAL ENGINEER
Randell D. Hiatt
No. C50200
Exp. 6-30-09
CIVIL
STATE OF CALIFORNIA

The State of California or its officers or agents shall not be responsible for the accuracy or completeness of electronic copies of this plan sheet.

To accompany plans dated 12-12-11

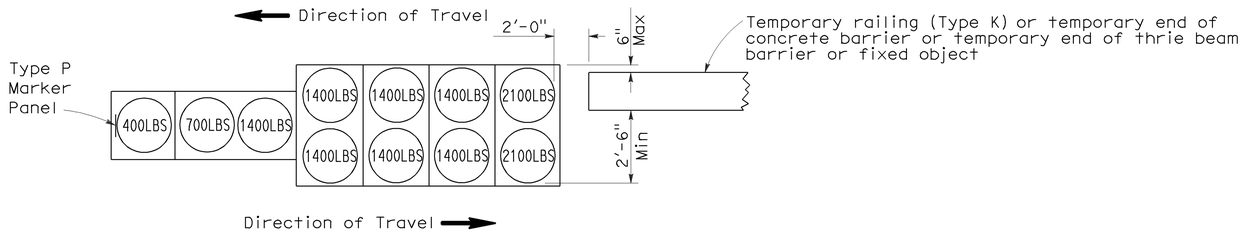

ARRAY 'TB11'

Approach speed less than 45 mph

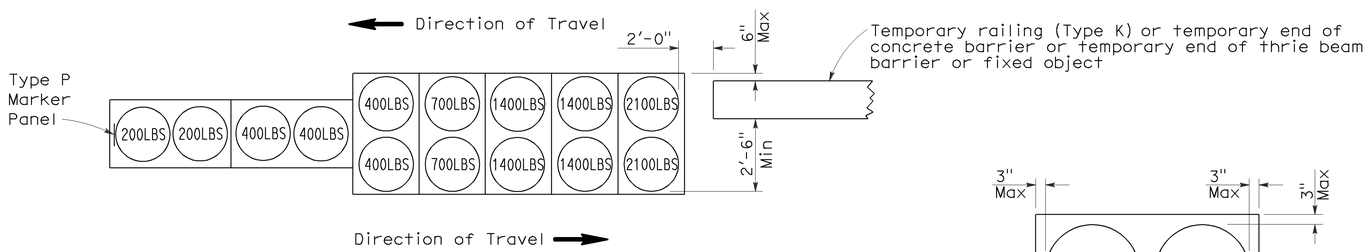

ARRAY 'TB14'

Approach speed 45 mph or more

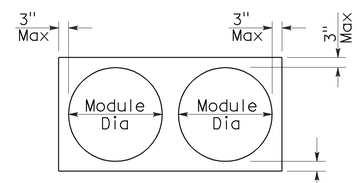

PLAN

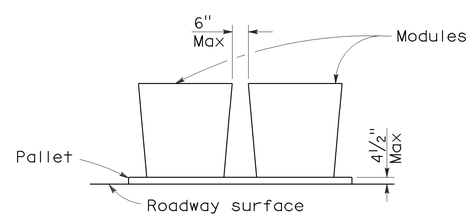

ELEVATION

CRASH CUSHION PALLET DETAIL

See Note 7

NOTES:

1. (XXX) Indicates sand filled module location and weight of sand in pounds for each module. Module spacing is based on the greater diameter of the module.
2. All sand weights are nominal.
3. Temporary crash cushion arrays shall not encroach on the traveled way.
4. Place the Type P marker panel so that the bottom of the panel rests upon the pallet.
5. Refer to Standard Plan A73B for marker details.
6. Approach speeds indicated conform to NCHRP 350 Report criteria.
7. Use of pallets is optional.

STATE OF CALIFORNIA
DEPARTMENT OF TRANSPORTATION

TEMPORARY CRASH CUSHION, SAND FILLED (BIDIRECTIONAL)

NO SCALE

RSP T1B DATED JUNE 6, 2008 SUPERSEDES STANDARD PLAN T1B
DATED MAY 1, 2006 - PAGE 212 OF THE STANDARD PLANS BOOK DATED MAY 2006.

REVISED STANDARD PLAN RSP T1B

2006 REVISED STANDARD PLAN RSP T1B

5-15-08

DIST	COUNTY	ROUTE	POST MILES TOTAL PROJECT	SHEET NO.	TOTAL SHEETS
04	SM	1	0.0/3.3	10	16

Randell D. Hiatt
REGISTERED CIVIL ENGINEER

June 6, 2008
PLANS APPROVAL DATE

REGISTERED PROFESSIONAL ENGINEER
Randell D. Hiatt
No. C50200
Exp. 6-30-09
CIVIL
STATE OF CALIFORNIA

The State of California or its officers or agents shall not be responsible for the accuracy or completeness of electronic copies of this plan sheet.

To accompany plans dated 12-12-11

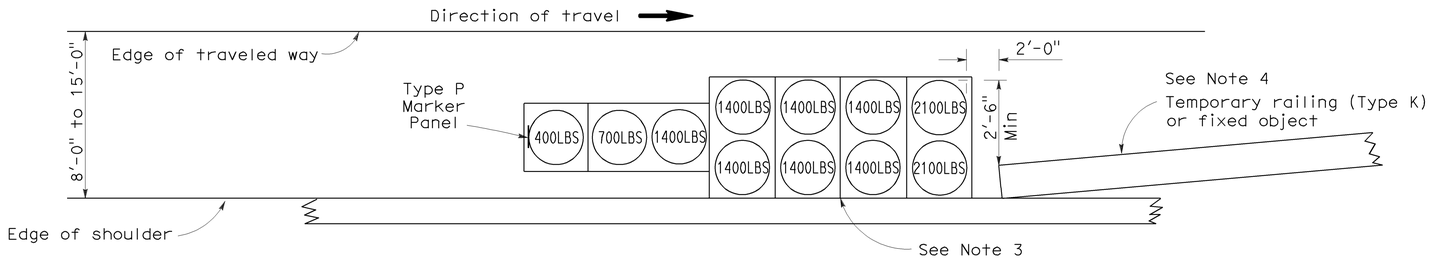

ARRAY 'TS11'

Approach speed less than 45 mph
See Note 9

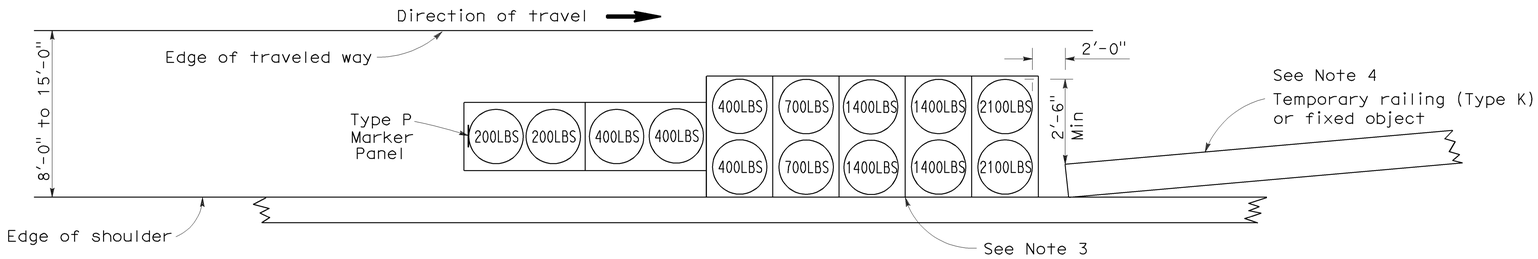

ARRAY 'TS14'

Approach speed 45 mph or more
See Note 9

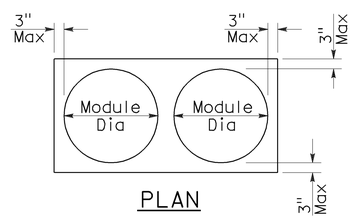

PLAN

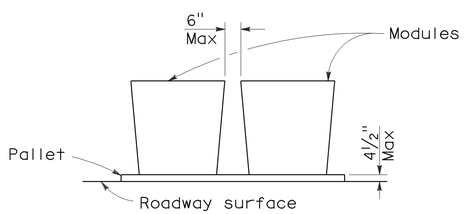

ELEVATION

CRASH CUSHION PALLET DETAIL

See Note 11

NOTES:

1. (XXX) Indicates sand filled module location and weight of sand in pounds for each module. Module spacing is based on the greater diameter of the module.
2. All sand weights are nominal.
3. The temporary crash cushion arrays shown on this plan shall be used only in locations where there will be traffic on one side of the temporary crash cushion array.
4. If the fixed object or approach end of the temporary railing is less than 15'-0" from the edge of traveled way, a temporary crash cushion is required in a construction or work zone.
5. Temporary crash cushion arrays shall not encroach on the traveled way.
6. Arrays for median shoulders shall conform to details shown on this plan for outside shoulders.
7. Place the Type P marker panel so that the bottom of the panel rests upon the pallet and faces traffic.
8. Refer to Standard Plan A73B for marker details.
9. For shoulder widths less than 8'-0", appropriate approved crash cushion protection, other than sand filled modules, shall be provided at fixed objects and at approach ends of temporary railing. The specific type of crash cushion shall be as shown on the project plans or as specified in the Special Provisions, or if not shown on the project plans or specified in the Special Provisions, shall be as approved by the Engineer.
10. Approach speeds indicated conform to NCHRP 350 Report criteria.
11. Use of pallets is optional.

STATE OF CALIFORNIA
DEPARTMENT OF TRANSPORTATION

TEMPORARY CRASH CUSHION, SAND FILLED (SHOULDER INSTALLATIONS)

NO SCALE

RSP T2 DATED JUNE 6, 2008 SUPERSEDES STANDARD PLAN T2
DATED MAY 1, 2006 - PAGE 213 OF THE STANDARD PLANS BOOK DATED MAY 2006.

REVISED STANDARD PLAN RSP T2

2006 REVISED STANDARD PLAN RSP T2

5-15-08

Dist	COUNTY	ROUTE	POST MILES TOTAL PROJECT	SHEET No.	TOTAL SHEETS
04	SM	1	0.0/3.3	11	16

Randell D. Hiatt
REGISTERED CIVIL ENGINEER

May 20, 2011
PLANS APPROVAL DATE

REGISTERED PROFESSIONAL ENGINEER
Randell D. Hiatt
No. C50200
Exp. 6-30-11
CIVIL
STATE OF CALIFORNIA

The State of California or its officers or agents shall not be responsible for the accuracy or completeness of electronic copies of this plan sheet.

To accompany plans dated 12-12-11

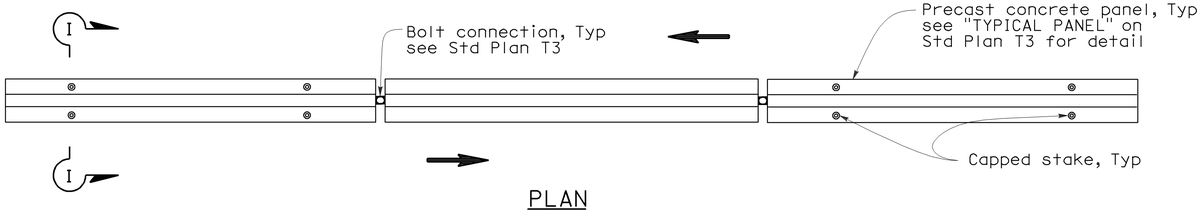

PLAN

RAILING STAKING CONFIGURATION FOR TWO-WAY TRAFFIC

See Note 1

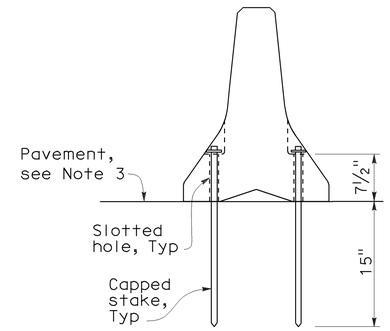

SECTION I-I

NOTES:

1. Where Type K Temporary Railing is placed as a temporary or long term barrier in two-way traffic on highways with less than 24" from the edge of traveled way, use four capped stakes per every other panel with end panels staked.
2. Where Type K Temporary Railing is placed 3" to 24" from the edge of an excavation on highways, use two capped stakes per panel along the traffic side.
3. Staked Type K Temporary Railing must be supported by at least 4" thick concrete, hot mix asphalt or existing asphalt concrete pavement.
4. The minimum yield strength for the washer must be 60,000 psi.
5. Direction of adjacent traffic indicated by ⟹.

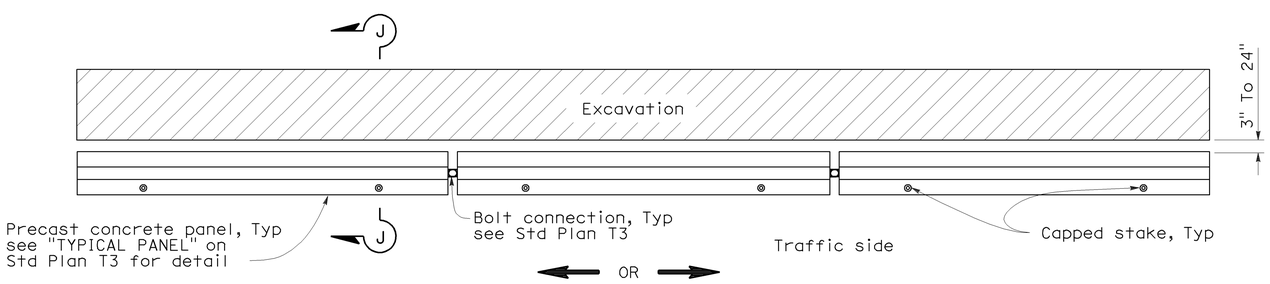

PLAN

RAILING STAKING CONFIGURATION ADJACENT TO AN EXCAVATION

See Note 2

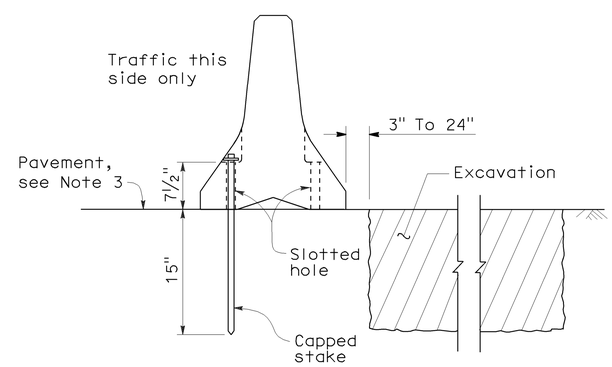

SECTION J-J

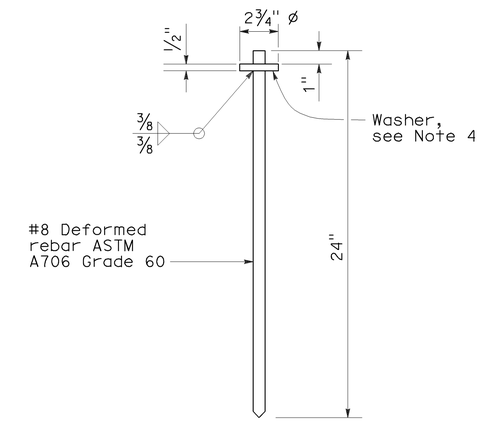

CAPPED STAKE DETAIL

STATE OF CALIFORNIA
DEPARTMENT OF TRANSPORTATION

TEMPORARY RAILING (TYPE K)

NO SCALE

NSP T3A DATED MAY 20, 2011 SUPPLEMENTS
THE STANDARD PLANS BOOK DATED MAY 2006.

NEW STANDARD PLAN NSP T3A

2006 NEW STANDARD PLAN NSP T3A

DIST	COUNTY	ROUTE	POST MILES TOTAL PROJECT	SHEET NO.	TOTAL SHEETS
04	SM	1	0.0/3.3	12	16

LICENSED LANDSCAPE ARCHITECT

August 15, 2008
PLANS Approval DATE

LICENSED LANDSCAPE ARCHITECT
Robert B. Schott 3635
Signature
11-04-08
Renewal Date
08-11-08
Date
STATE OF CALIFORNIA

The State of California or its officers or agents shall not be responsible for the accuracy or completeness of electronic copies of this plan sheet.

To accompany plans dated 12-12-11

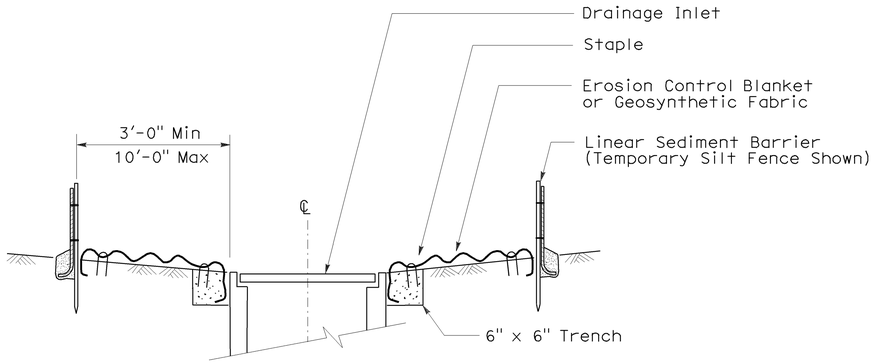

SECTION A-A

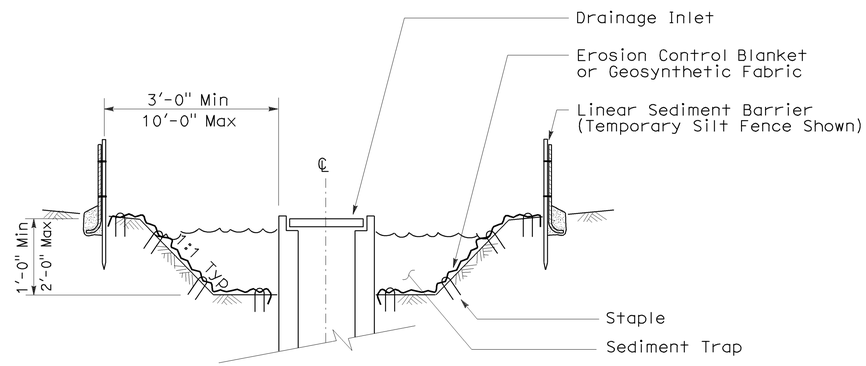

SECTION B-B

NOTES:

1. See Standard Plan T51 for Temporary Silt Fence.
2. Dimensions may vary to fit field conditions.

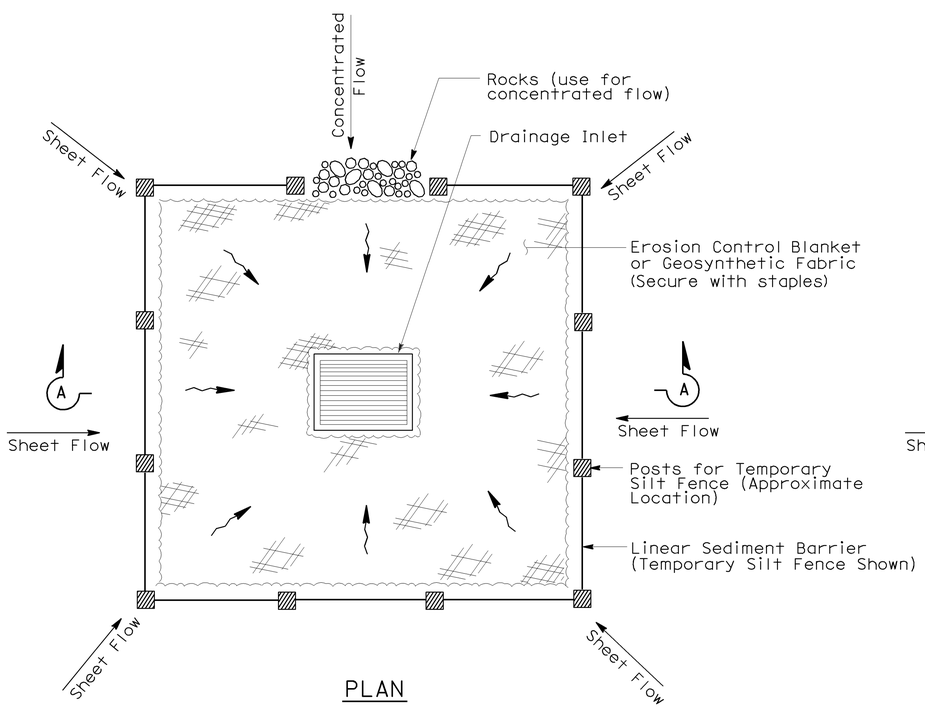

PLAN

TEMPORARY DRAINAGE
INLET PROTECTION (TYPE 1)

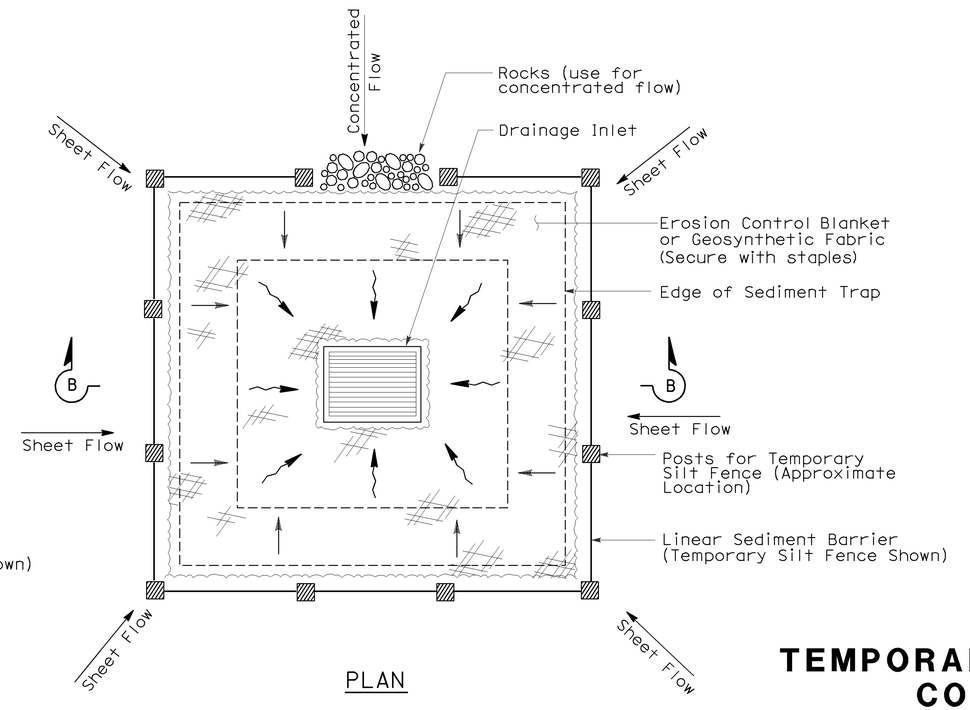

PLAN

TEMPORARY DRAINAGE
INLET PROTECTION (TYPE 2)
(EXCAVATED SEDIMENT TRAP)

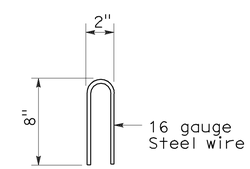

STAPLE DETAIL

STATE OF CALIFORNIA
DEPARTMENT OF TRANSPORTATION

TEMPORARY WATER POLLUTION CONTROL DETAILS (TEMPORARY DRAINAGE INLET PROTECTION)

NO SCALE

Nsp t61 dated august 15, 2008 supplements the standard plans book dated may 2006.

NEW STANDARD PLAN NSP T61

2006 NEW STANDARD PLAN NSP T61

7-11-08

DIST	COUNTY	ROUTE	POST MILES TOTAL PROJECT	SHEET NO.	TOTAL SHEETS
04	SM	1	0.0/3.3	13	16

Robert B Schott
LICENSED LANDSCAPE ARCHITECT

August 15, 2008
PLANS APPROVAL DATE

LICENSED LANDSCAPE ARCHITECT
Robert B. Schott 3695
Signature
11-04-08
Renewal Date
08-11-08
Date
STATE OF CALIFORNIA

The State of California or its officers or agents shall not be responsible for the accuracy or completeness of electronic copies of this plan sheet.

To accompany plans dated 12-12-11

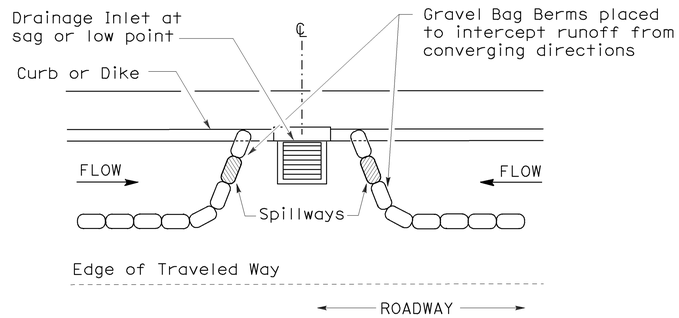

PLAN

CONFIGURATION FOR SAG POINT INLET (GRAVEL BAG BERM)

GRAVEL BAG BERM (TYPE 3A) SPACING TABLE

SLOPE OF ROADWAY (PERCENT)	1 to 3.9	4 to 5.9	6 to 7.9	8 to 10	10+
INTERVAL BETWEEN BERM	100′	75′	50′	25′	12′

For slope of less than 1%, install barriers only if erosion/sediment is prevalent

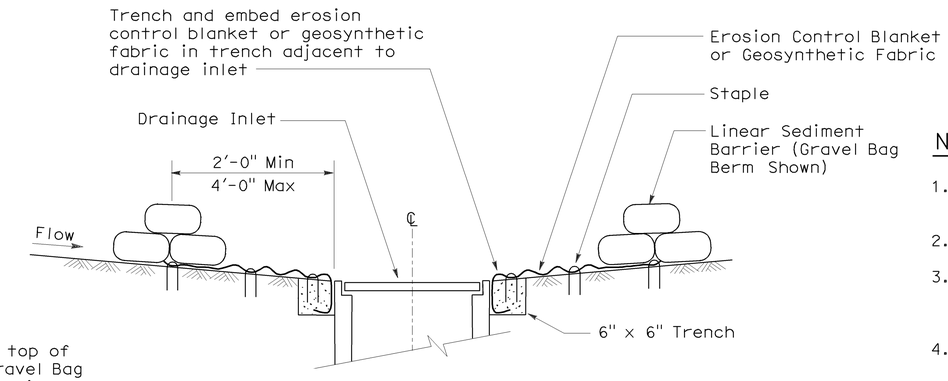

SECTION A-A

NOTES:

1. Place safety cones adjacent to drainage inlet protection.
2. Dimensions may vary to fit field conditions.
3. Install a minimum of 3 gravel bag berms upstream of each drainage inlet to be protected.
4. Position erosion control blanket or geosynthetic fabric at edge of concrete apron and secure in trench.
5. Erosion control blanket or geosynthetic fabric is not required if the area adjacent to the drainage inlet is vegetated or paved.

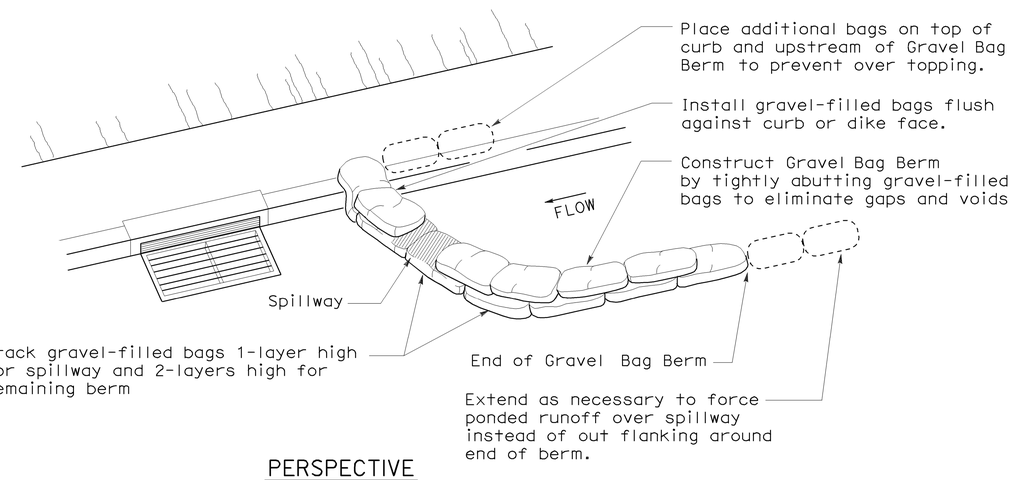

PERSPECTIVE

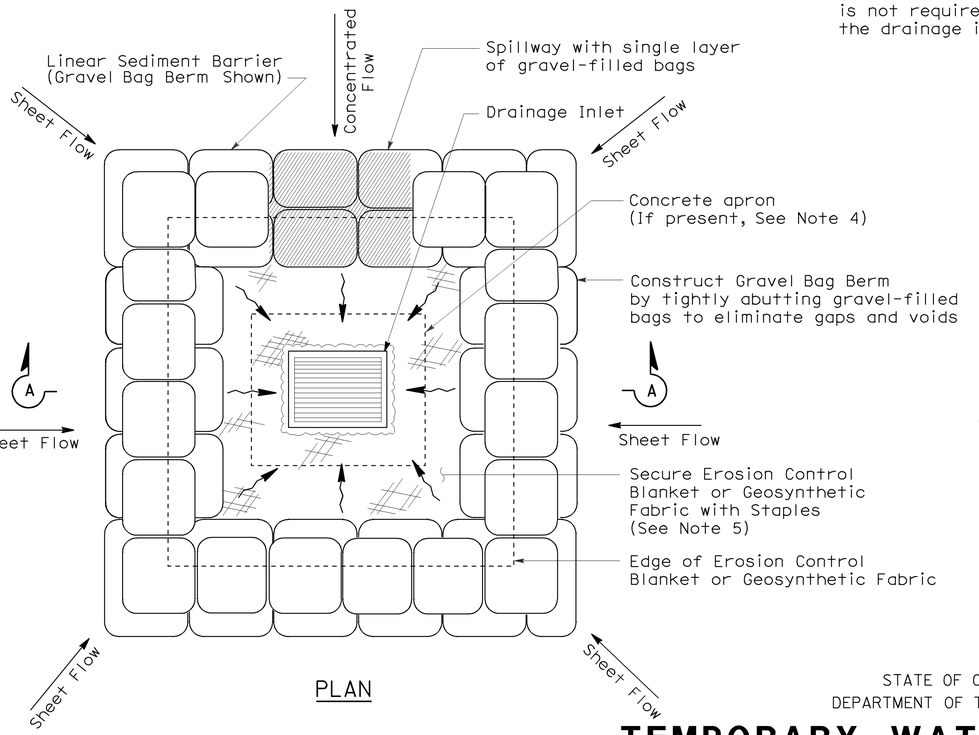

PLAN

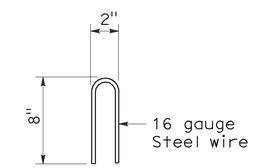

STAPLE DETAIL

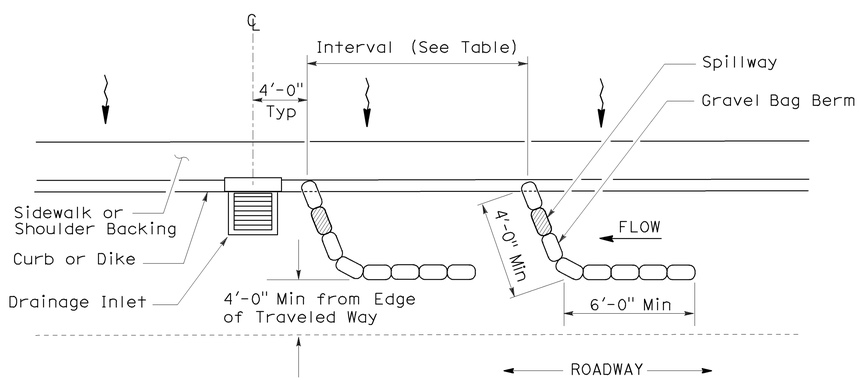

PLAN

TEMPORARY DRAINAGE INLET PROTECTION (TYPE 3A) (GRAVEL BAG BERM)

TEMPORARY DRAINAGE INLET PROTECTION (TYPE 3B)

STATE OF CALIFORNIA
DEPARTMENT OF TRANSPORTATION

TEMPORARY WATER POLLUTION CONTROL DETAILS (TEMPORARY DRAINAGE INLET PROTECTION)

NO SCALE

NSP T62 DATED AUGUST 15, 2008 SUPPLEMENTS
THE STANDARD PLANS BOOK DATED MAY 2006.

NEW STANDARD PLAN NSP T62

2006 NEW STANDARD PLAN NSP T62

7-11-08

DIST	COUNTY	ROUTE	POST MILES TOTAL PROJECT	SHEET NO.	TOTAL SHEETS
04	SM	1	0.0/3.3	14	16

Robert B Schott
LICENSED LANDSCAPE ARCHITECT

August 15, 2008
PLANS APPROVAL DATE

LICENSED LANDSCAPE ARCHITECT
Robert B. Schott 3695
Signature
11-04-08
Renewal Date
08-11-08
Date
STATE OF CALIFORNIA

The State of California or its officers or agents shall not be responsible for the accuracy or completeness of electronic copies of this plan sheet.

To accompany plans dated 12-12-11

FLEXIBLE SEDIMENT BARRIER SPACING TABLE

SLOPE OF ROADWAY (PERCENT)	0 to 0.9	1 to 1.9	2 to 2.9	3 to 4	5+
INTERVAL BETWEEN BARRIERS	50′	35′	30′	25′	20′
ANGLE FROM FACE OF CURB	70°	70°	70°	45°	45°
SUGGESTED BARRIER LENGTH	6′	6′	6′	6′	6′

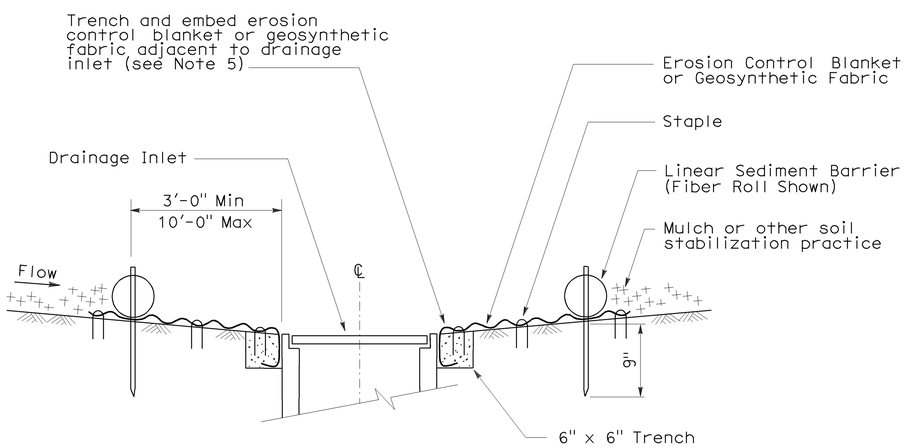

SECTION A-A

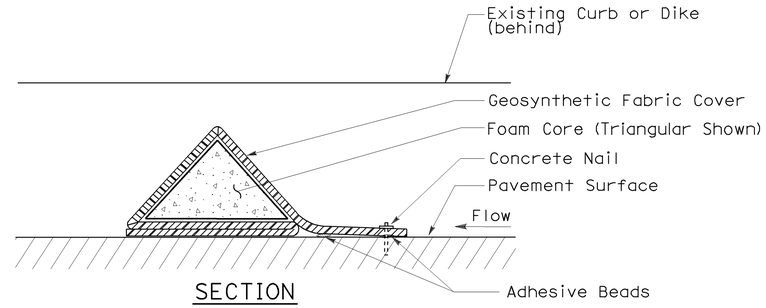

SECTION

FLEXIBLE SEDIMENT BARRIER DETAIL
(FOAM BARRIER SHOWN)

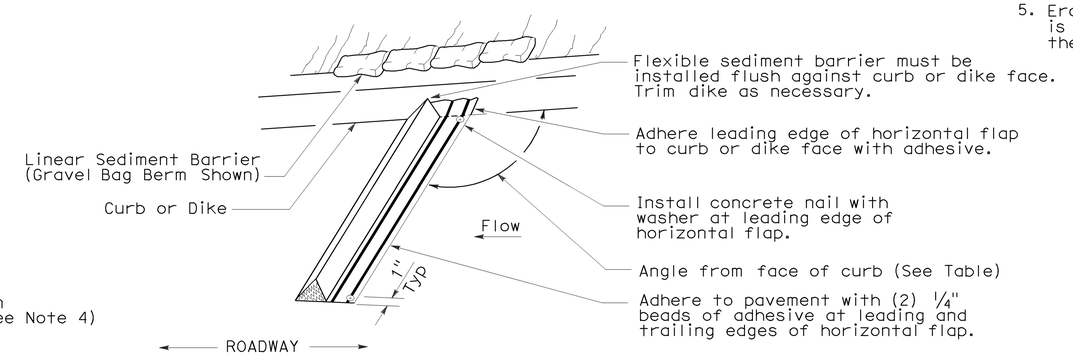

PERSPECTIVE

NOTES:

1. See Standard Plan T51 for Temporary Silt Fence.
2. Dimensions may vary to fit field conditions.
3. Install a minimum of 3 flexible sediment barriers upstream of each drainage inlet to be protected.
4. Position erosion control blanket or geosynthetic fabric at edge of concrete apron and secure in trench.
5. Erosion control blanket or geosynthetic fabric is not required if the area adjacent to the drainage inlet is vegetated.

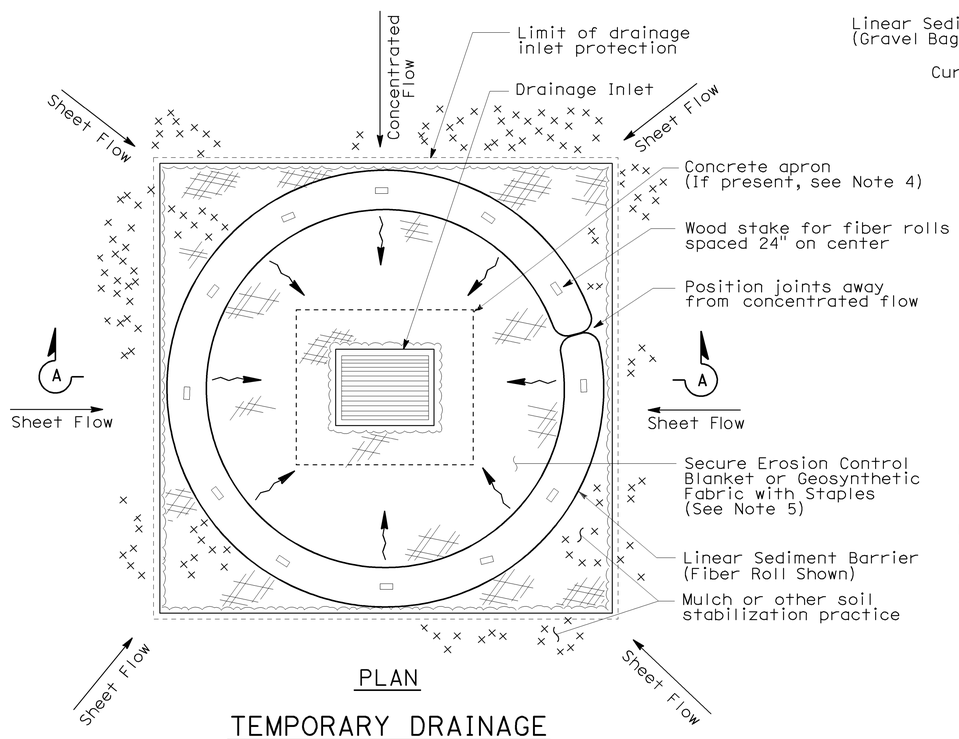

PLAN

TEMPORARY DRAINAGE
INLET PROTECTION (TYPE 4A)

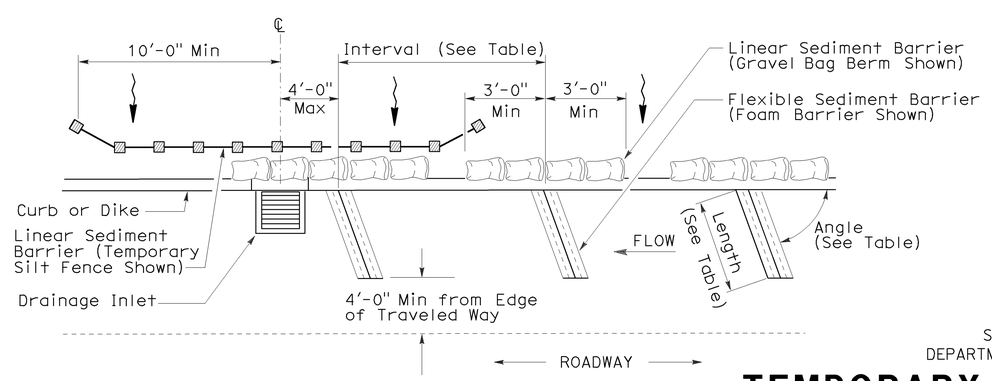

PLAN

TEMPORARY DRAINAGE
INLET PROTECTION (TYPE 4B)
FLEXIBLE SEDIMENT BARRIER

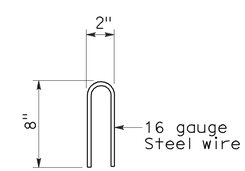

STAPLE DETAIL

STATE OF CALIFORNIA
DEPARTMENT OF TRANSPORTATION

TEMPORARY WATER POLLUTION CONTROL DETAILS (TEMPORARY DRAINAGE INLET PROTECTION)

NO SCALE

NSP T63 DATED AUGUST 15, 2008 SUPPLEMENTS
THE STANDARD PLANS BOOK DATED MAY 2006.

NEW STANDARD PLAN NSP T63

2006 NEW STANDARD PLAN NSP T63

7-11-08

DIST	COUNTY	ROUTE	POST MILES TOTAL PROJECT	SHEET NO.	TOTAL SHEETS
04	SM	1	0.0/3.3	15	16

LICENSED LANDSCAPE ARCHITECT

August 15, 2008
PLANS APPROVAL DATE

LICENSED LANDSCAPE ARCHITECT
Robert B. Schott 3635
Signature
11-04-08
Renewal Date
08-11-08
Date
STATE OF CALIFORNIA

The State of California or its officers or agents shall not be responsible for the accuracy or completeness of electronic copies of this plan sheet.

To accompany plans dated 12-12-11

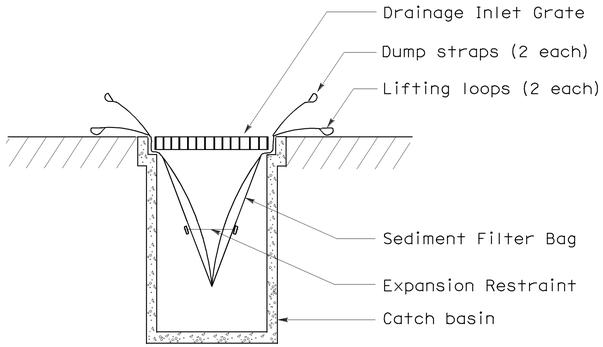

SECTION B-B

SEDIMENT FILTER BAG DETAIL

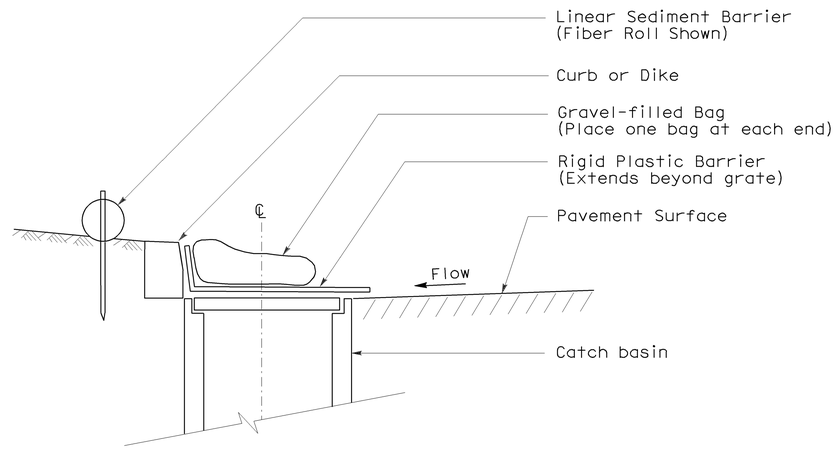

SECTION

TEMPORARY DRAINAGE INLET PROTECTION (TYPE 6A) (CATCH BASIN WITH GRATE)

NOTES:

1. See Standard Plan T51 for Temporary Silt Fence.
2. Dimensions may vary to fit field conditions.

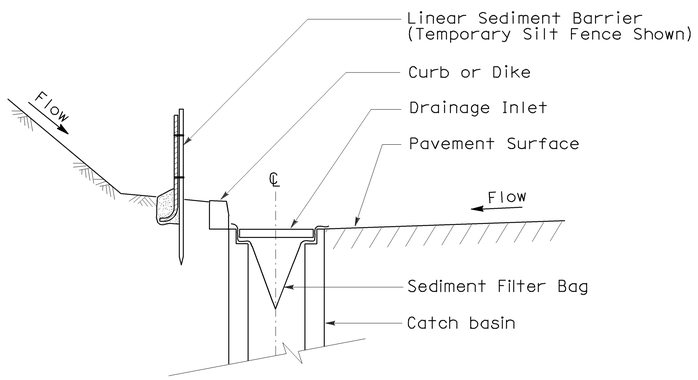

SECTION A-A

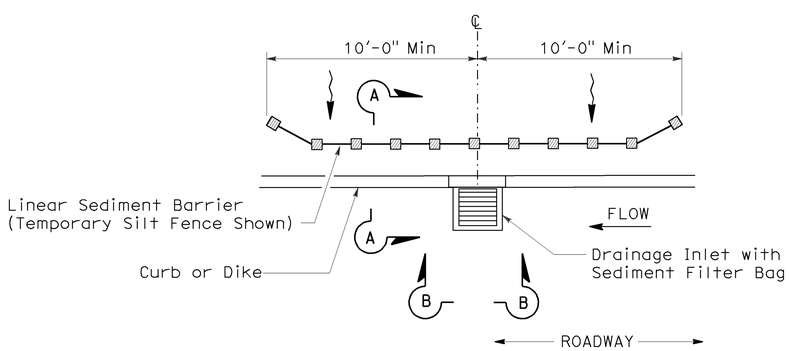

PLAN

TEMPORARY DRAINAGE INLET PROTECTION (TYPE 5) (SEDIMENT FILTER BAG)

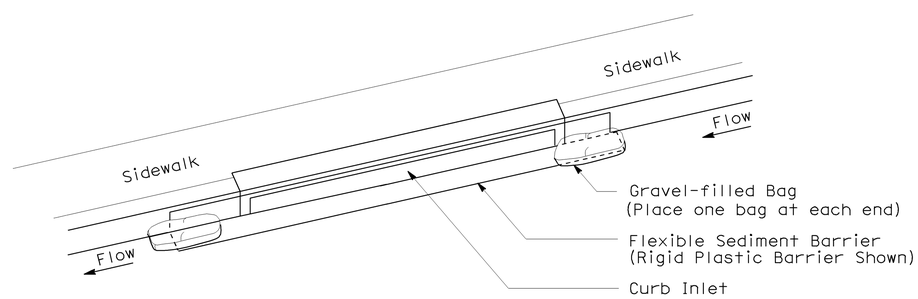

PERSPECTIVE

TEMPORARY DRAINAGE INLET PROTECTION (TYPE 6B) (CURB INLET WITHOUT GRATE)

STATE OF CALIFORNIA
DEPARTMENT OF TRANSPORTATION

TEMPORARY WATER POLLUTION CONTROL DETAILS (TEMPORARY DRAINAGE INLET PROTECTION)

NO SCALE

NSP T64 DATED AUGUST 15, 2008 SUPPLEMENTS
THE STANDARD PLANS BOOK DATED MAY 2006.

NEW STANDARD PLAN NSP T64

2006 NEW STANDARD PLAN NSP T64

7-11-08

DIST	COUNTY	ROUTE	POST MILES TOTAL PROJECT	SHEET NO.	TOTAL SHEETS
04	SM	1	0.0/3.3	16	16

LICENSED LANDSCAPE ARCHITECT

April 3, 2009
PLANS APPROVAL DATE

The State of California or its officers or agents shall not be responsible for the accuracy or completeness of electronic copies of this plan sheet.

LICENSED LANDSCAPE ARCHITECT — Robert B. Schott 3635 — Signature — 11-30-10 Renewal Date — 2-25-09 Date — STATE OF CALIFORNIA

To accompany plans dated 12-12-11

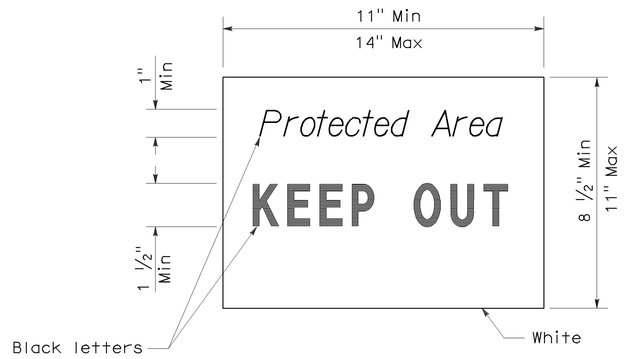

SIGN DETAIL

NOTE:

1. Temporary silt fence and temporary straw bale barrier shown for reference purposes only.

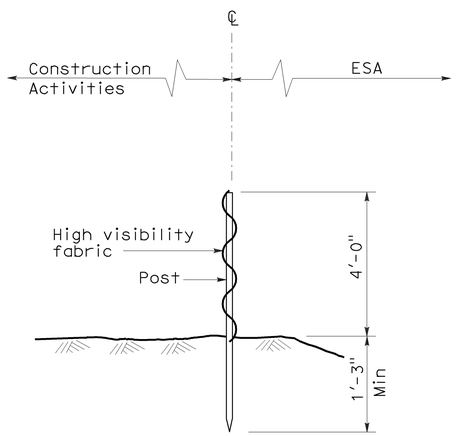

SECTION
TEMPORARY FENCE (TYPE ESA)

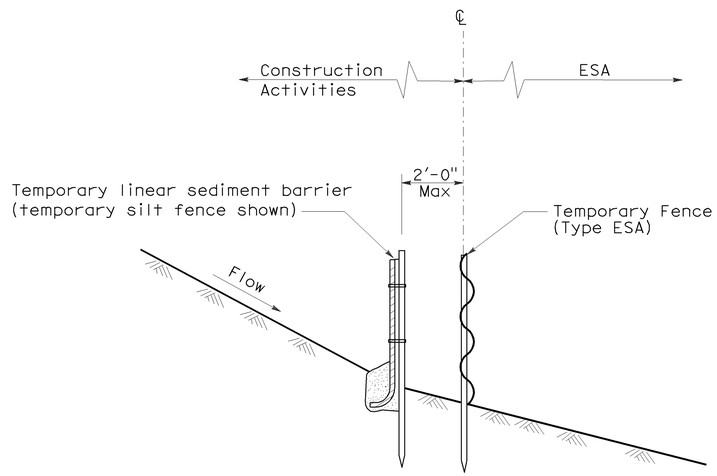

SECTION
PLACEMENT DETAIL
FOR TEMPORARY LINEAR SEDIMENT BARRIER
USED WITH TEMPORARY
FENCE (TYPE ESA)
(See Note 1)

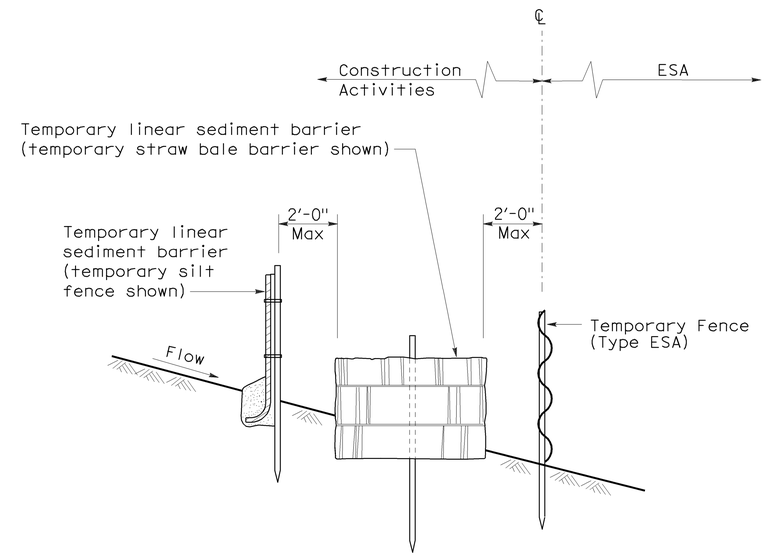

SECTION
PLACEMENT DETAIL
FOR TEMPORARY SILT FENCE
AND TEMPORARY STRAW BALE BARRIER
USED WITH TEMPORARY FENCE (TYPE ESA)
(See Note 1)

STATE OF CALIFORNIA
DEPARTMENT OF TRANSPORTATION

TEMPORARY WATER POLLUTION CONTROL DETAILS [TEMPORARY FENCE (TYPE ESA)]

NO SCALE

NSP T65 DATED APRIL 3, 2009 SUPPLEMENTS
THE STANDARD PLANS BOOK DATED MAY 2006.

NEW STANDARD PLAN NSP T65

2006 NEW STANDARD PLAN NSP T65