Dist	COUNTY	ROUTE	POST MILES TOTAL PROJECT	SHEET No.	TOTAL SHEETS
04	Ala	680	R12.7/R15.4	1	16

INDEX OF PLANS

SHEET No.	DESCRIPTION
1	TITLE AND LOCATION MAP
2	TYPICAL CROSS SECTIONS
3 - 4	CONSTRUCTION AREA SIGNS
5	PAVEMENT DELINEATION QUANTITIES
6	SUMMARY OF QUANTITIES
7-16	REVISED AND NEW STANDARD PLANS

THE STANDARD PLANS LIST APPLICABLE TO THIS CONTRACT IS INCLUDED IN THE NOTICE TO BIDDERS AND SPECIAL PROVISIONS BOOK.

STATE OF CALIFORNIA

DEPARTMENT OF TRANSPORTATION

PROJECT PLANS FOR CONSTRUCTION ON

STATE HIGHWAY

IN ALAMEDA COUNTY
AT SUNOL AND IN PLEASANTON
FROM 0.3 MILE NORTH OF SUNOL/KOOPMAN UNDERCROSSING
TO 0.1 MILE NORTH OF PLEASANTON-SUNOL ROAD UNDERCROSSING

TO BE SUPPLEMENTED BY STANDARD PLANS DATED MAY 2006

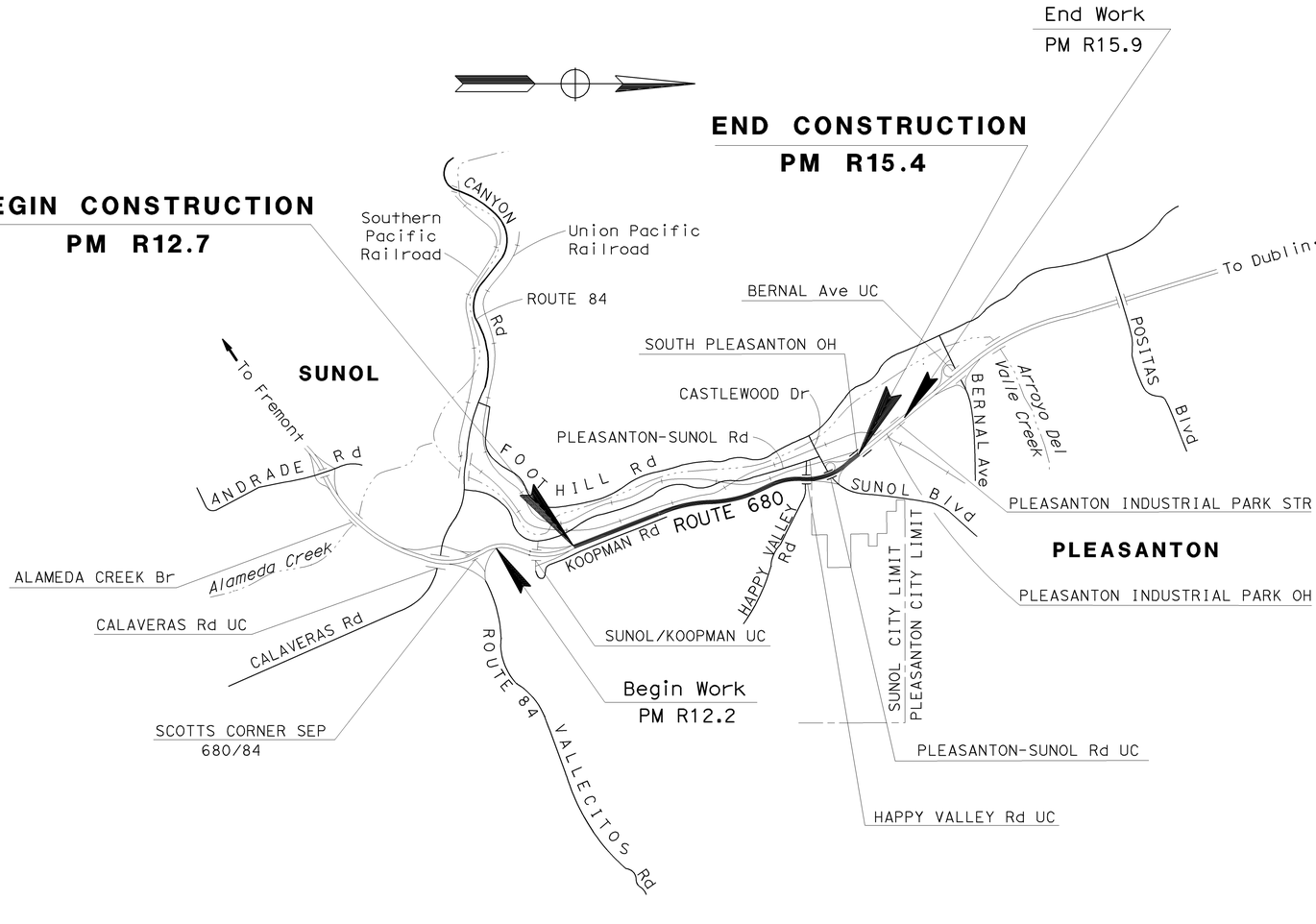

NO SCALE

LOCATION MAP

PROJECT MANAGER: RAMSES SARGISS

DESIGN ENGINEER: VIJITH THILAKARATNE

THE CONTRACTOR SHALL POSSESS THE CLASS (OR CLASSES) OF LICENSE AS SPECIFIED IN THE "NOTICE TO BIDDERS."

9-19-11
PROJECT ENGINEER
REGISTERED CIVIL ENGINEER
DATE

Binh V. Hong
No. 63850
Exp. 9-30-12
CIVIL
REGISTERED PROFESSIONAL ENGINEER
STATE OF CALIFORNIA

January 23, 2012
PLANS APPROVAL DATE

THE STATE OF CALIFORNIA OR ITS OFFICERS OR AGENTS SHALL NOT BE RESPONSIBLE FOR THE ACCURACY OR COMPLETENESS OF SCANNED COPIES OF THIS PLAN SHEET.

CONTRACT No.	04-2E4404
PROJECT ID	0400020690

LAST REVISION 06-28-11
DATE PLOTTED => 25-JAN-2012
TIME PLOTTED => 14:09

Dist	COUNTY	ROUTE	POST MILES TOTAL PROJECT	SHEET No.	TOTAL SHEETS
04	Ala	680	R12.7/R15.4	2	16

REGISTERED CIVIL ENGINEER — 9-19-11 DATE

1-23-12
PLANS APPROVAL DATE

REGISTERED PROFESSIONAL ENGINEER — Binh V. Hong — No. 63850 — Exp. 9-30-12 — CIVIL — STATE OF CALIFORNIA

THE STATE OF CALIFORNIA OR ITS OFFICERS OR AGENTS SHALL NOT BE RESPONSIBLE FOR THE ACCURACY OR COMPLETENESS OF SCANNED COPIES OF THIS PLAN SHEET.

NOTES:

1. DIMENSIONS OF THE STRUCTURES SECTIONS ARE SUBJECT TO TOLERANCE SPECIFIED IN THE STANDARD SPECIFICATIONS.
2. SUPERELEVATION AS SHOWN OR AS DIRECTED BY THE ENGINEER.
3. EXISTING UTILITIES HAVE NOT BEEN PLOTTED ON THESE PLANS.
4. FOR DIMENSIONS AND LOCATIONS OF REPLACE CONCRETE PAVEMENT (RSC) SEE SHEET Q-1.

ABBREVIATION:

RSC RAPID STRENGTH CONCRETE

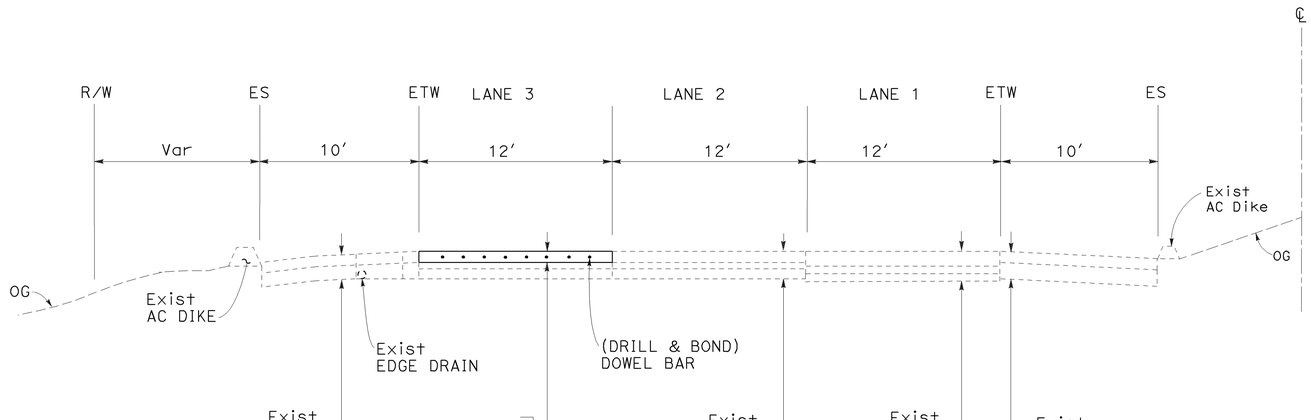

ROUTE 680

SOUTHBOUND

PM R12.7/R15.4

TYPICAL CROSS SECTIONS

NO SCALE

X-1

CALCULATED-DESIGNED BY: ATSEDE AYALEW
CHECKED BY: BINH HONG
REVISED BY
DATE REVISED
FUNCTIONAL SUPERVISOR: VIJITH THILAKARATNE

STATE OF CALIFORNIA - DEPARTMENT OF TRANSPORTATION
Caltrans®
DESIGN

LAST REVISION: DATE PLOTTED => 25-JAN-2012 06-08-11 TIME PLOTTED => 13:52

BORDER LAST REVISED 7/2/2010 | USERNAME => s135695 | DGN FILE => 0400020690ca001.dgn | RELATIVE BORDER SCALE IS IN INCHES 0 1 2 3 | UNIT 0976 | PROJECT NUMBER & PHASE 04000206901

Dist	COUNTY	ROUTE	POST MILES TOTAL PROJECT	SHEET No.	TOTAL SHEETS
04	Ala	680	R12.7/R15.4	3	16

Florante P. Perez 9-19-11
REGISTERED CIVIL ENGINEER DATE

1-23-12
PLANS APPROVAL DATE

REGISTERED PROFESSIONAL ENGINEER — Florante P. Perez — No. 41030 — Exp. 3-31-13 — CIVIL — STATE OF CALIFORNIA

THE STATE OF CALIFORNIA OR ITS OFFICERS OR AGENTS SHALL NOT BE RESPONSIBLE FOR THE ACCURACY OR COMPLETENESS OF SCANNED COPIES OF THIS PLAN SHEET.

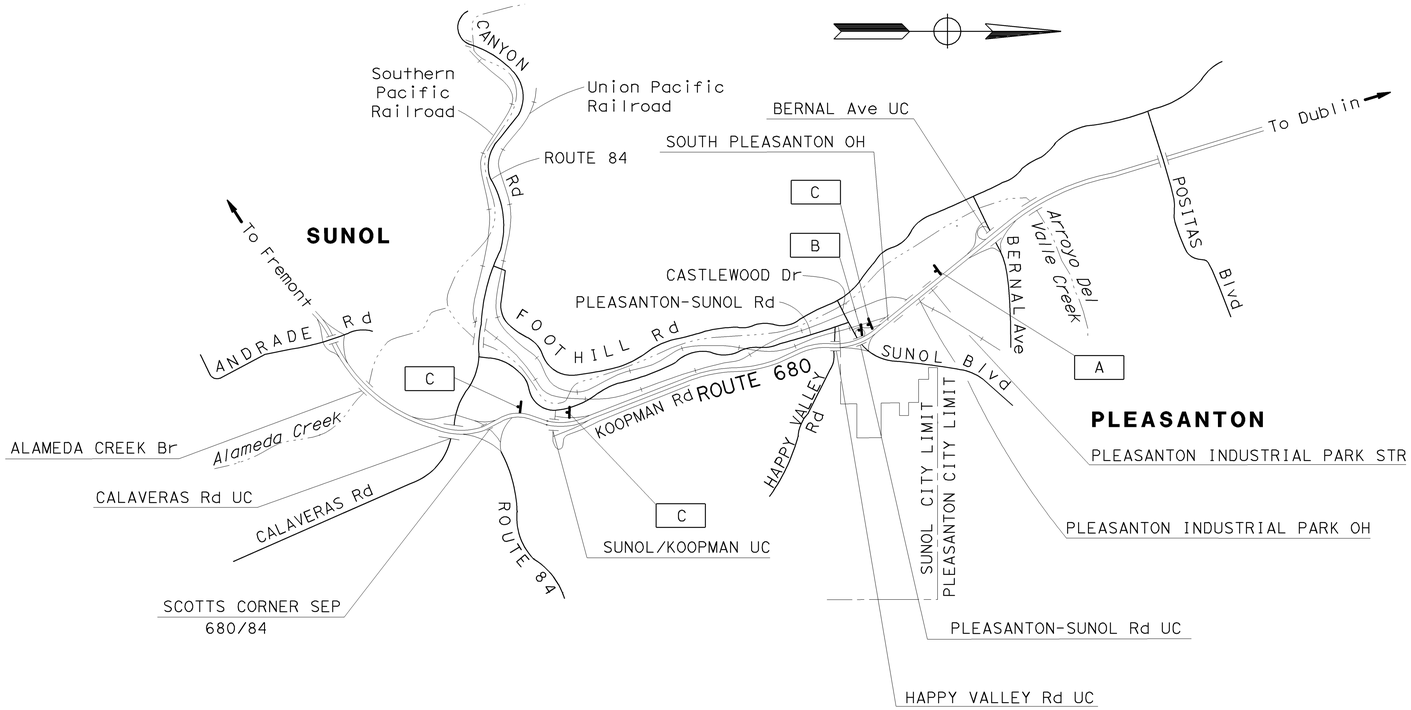

LEGEND:

A — CONSTRUCTION AREA SIGN

NOTES:

1. EXACT LOCATION AND POSITION OF CONSTRUCTION AREA SIGNS TO BE DETERMINED BY THE ENGINEER.
2. ALL CONSTRUCTION AREA SIGNS SHALL BE STATIONARY MOUNTED, UNLESS OTHERWISE INDICATED.

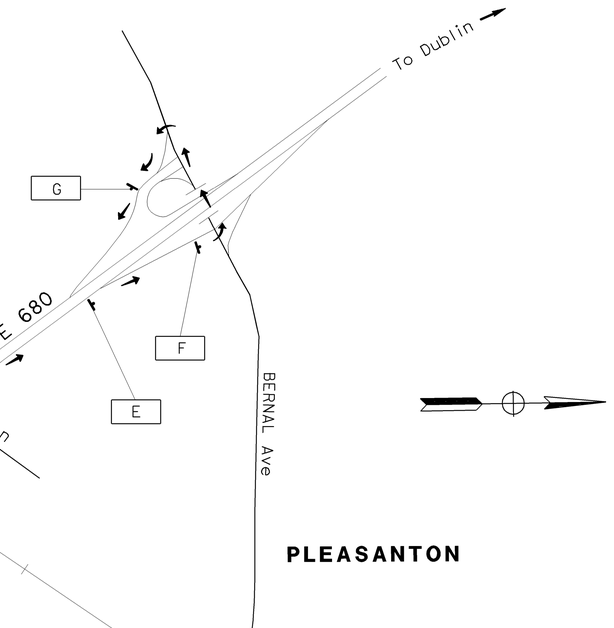

DETOUR PLAN No. 1

SB Rte 680 ON-RAMP FROM PLEASANTON-SUNOL Rd CLOSURE

VIA:
EB DETOUR:
EB CASTLEWOOD Dr;
ON-RAMP TO NB Rte 680;
OFF-RAMP TO BERNAL Ave;
WB BERNAL Ave;
ON-RAMP TO SB Rte 680.

VIA:
WB DETOUR:
WB SUNOL Blvd;
ON-RAMP TO NB Rte 680;
OFF-RAMP TO BERNAL Ave;
WB BERNAL Ave;
ON-RAMP TO SB Rte 680.

CONSTRUCTION AREA SIGNS

NO SCALE

APPROVED FOR CONSTRUCTION AREA SIGN WORK ONLY

CS-1

LAST REVISION DATE PLOTTED => 26-JAN-2012
06-08-11 TIME PLOTTED => 15:50

STATE OF CALIFORNIA - DEPARTMENT OF TRANSPORTATION
TRAFFIC
FUNCTIONAL SUPERVISOR: LOURDES DAVID
CALCULATED-DESIGNED BY
CHECKED BY
REVISED BY
DATE REVISED
LEOPOLDO G. BONGATO
FLORANTE P. PEREZ

BORDER LAST REVISED 7/2/2010 | USERNAME => s135695 | DGN FILE => 04000206901a001.dgn | RELATIVE BORDER SCALE IS IN INCHES 0 1 2 3 | UNIT 0976 | PROJECT NUMBER & PHASE 04000206901

Dist	COUNTY	ROUTE	POST MILES TOTAL PROJECT	SHEET No.	TOTAL SHEETS
04	Ala	680	R12.7/R15.4	4	16

Florante P. Perez 9-19-11
REGISTERED CIVIL ENGINEER DATE

1-23-12
PLANS APPROVAL DATE

REGISTERED PROFESSIONAL ENGINEER
Florante P. Perez
No. 41030
Exp. 3-31-13
CIVIL
STATE OF CALIFORNIA

THE STATE OF CALIFORNIA OR ITS OFFICERS OR AGENTS SHALL NOT BE RESPONSIBLE FOR THE ACCURACY OR COMPLETENESS OF SCANNED COPIES OF THIS PLAN SHEET.

STATIONARY MOUNTED CONSTRUCTION AREA SIGNS

SIGN	CODE	MESSAGE	PANEL SIZE (INCH x INCH)	NUMBER OF POSTS AND SIZE (EA-INCH x INCH)	NUMBER OF SIGNS
A	W20-1	ROAD WORK AHEAD	60 x 60	2 - 4 x 6	1
B	W20-1	ROAD WORK AHEAD	48 x 48	1 - 4 x 6	1
C	G20-2	END ROAD WORK	36 x 18	1 - 4 x 4	3
D	M4-8	DETOUR	21 x 9	1 - 4 x 6	1
	G27-2(680)(CA)	ROUTE 680	21 x 18		
	M3-3	SOUTH	21 x 9		
	M6-1(→)	RIGHT ARROW	21 x 15		
E	M4-8	DETOUR	21 x 9	1 - 4 x 6	1
	G27-2(680)(CA)	ROUTE 680	21 x 18		
	M3-3	SOUTH	21 x 9		
	M6-2(↗)	UP-RIGHT ARROW	21 x 15		
F	M4-8	DETOUR	21 x 9	1 - 4 x 6	1
	G27-2(680)(CA)	ROUTE 680	21 x 18		
	M3-3	SOUTH	21 x 9		
	M6-1(←)	LEFT ARROW	21 x 15		
G	M4-8a	END DETOUR	30 x 18	1 - 4 x 4	1
H	W20-2	DETOUR AHEAD	36 x 18	1 - 4 x 4	2
I	SC6-4(CA)	RAMP CLOSED TIME , DATE	48 x 60	1 - 4 x 4	1
J	M4-8	DETOUR	21 x 9	1 - 4 x 6	1
	G27-2(680)(CA)	ROUTE 680	21 x 18		
	M3-3	SOUTH	21 x 9		
	M6-3(↑)	STRAIGHT ARROW	21 x 15		

APPROVED FOR CONSTRUCTION AREA SIGN WORK ONLY

FOR NOTES, ABBREVIATIONS AND LEGEND, SEE SHEET CS-1

CONSTRUCTION AREA SIGNS

NO SCALE

CS-2

REVISED BY | DATE REVISED

CALCULATED-DESIGNED BY: LEOPOLDO G. BONGATO
CHECKED BY: FLORANTE P. PEREZ

FUNCTIONAL SUPERVISOR: LOURDES DAVID

STATE OF CALIFORNIA - DEPARTMENT OF TRANSPORTATION
TRAFFIC

LAST REVISION | DATE PLOTTED => 26-JAN-2012
05-08-11 | TIME PLOTTED => 15:31

BORDER LAST REVISED 7/2/2010

USERNAME => s135695
DGN FILE => 04000206901a002.dgn

RELATIVE BORDER SCALE IS IN INCHES 0 1 2 3

UNIT 0976 | PROJECT NUMBER & PHASE 04000206901

Dist	COUNTY	ROUTE	POST MILES TOTAL PROJECT	SHEET No.	TOTAL SHEETS
04	Ala	680	R12.7/R15.4	5	16

REGISTERED CIVIL ENGINEER — DATE 9-19-11

PLANS APPROVAL DATE 1-23-12

Binh V. Hong No. 63850 Exp. 9-30-12 CIVIL — REGISTERED PROFESSIONAL ENGINEER — STATE OF CALIFORNIA

THE STATE OF CALIFORNIA OR ITS OFFICERS OR AGENTS SHALL NOT BE RESPONSIBLE FOR THE ACCURACY OR COMPLETENESS OF SCANNED COPIES OF THIS PLAN SHEET.

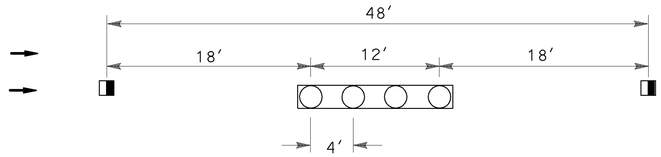

DETAIL 13M

NO SCALE

NOTE:

INSTALL 4" WHITE AFTER INSTALLING PAVEMENT MARKERS.

PAVEMENT DELINEATION QUANTITIES

POST MILE (SB)	DETAIL No.	LENGTH (N)	PAVEMENT MARKERS		REMOVE PAVEMENT MARKER	THERMOPLASTIC TRAFFIC STRIPE	
			NON-REFLECTIVE	RETROREFLECTIVE		4"	
			TYPE A	TYPE G		WHITE	WHITE (BROKEN 35-13)
		LF	EA			LF	
R12.7 - R15.6	13M	2430	203	52	254		2430
	27B	14256				2430	
TOTAL			203	52	254	2430	2430

(N) NOT A SEPARATE PAY ITEM; FOR INFORMATION ONLY.

PAVEMENT DELINEATION QUANTITIES

PDQ-1

STATE OF CALIFORNIA - DEPARTMENT OF TRANSPORTATION — DESIGN

FUNCTIONAL SUPERVISOR: VIJITH THILAKARATNE

CALCULATED-DESIGNED BY: ATSEDE AYALEW

CHECKED BY: BINH HONG

REVISED BY / DATE REVISED

LAST REVISION: DATE PLOTTED => 26-JAN-2012 TIME PLOTTED => 15:17

05-08-11

BORDER LAST REVISED 7/2/2010

USERNAME => s135695
DGN FILE => 0400020690nc001.dgn

RELATIVE BORDER SCALE IS IN INCHES 0 1 2 3

UNIT 0976

PROJECT NUMBER & PHASE 04000206901

Dist	COUNTY	ROUTE	POST MILES TOTAL PROJECT	SHEET No.	TOTAL SHEETS
04	Ala	680	R12.7/R15.4	6	16

9-19-11
REGISTERED CIVIL ENGINEER DATE

1-23-12
PLANS APPROVAL DATE

REGISTERED PROFESSIONAL ENGINEER
Binh V. Hong
No. 63850
Exp. 9-30-12
CIVIL
STATE OF CALIFORNIA

THE STATE OF CALIFORNIA OR ITS OFFICERS OR AGENTS SHALL NOT BE RESPONSIBLE FOR THE ACCURACY OR COMPLETENESS OF SCANNED COPIES OF THIS PLAN SHEET.

PAVEMENT STRUCTURE QUANTITIES

POST MILE	DIRECTION	LANE No. (N)	No. OF ISOLATED SLABS (N)	No. OF CONTIGUOUS SLABS (N)	TOTAL No. OF SLABS (N)	LANE LENGTH ISOLATED (N)	LANE LENGTH CONTIGUOUS (N)	DOWEL BAR (DRILL AND BOND)	THICKNESS (N)	REPLACE CONCRETE PAVEMENT (RAPID STRENGTH CONCRETE)
						LF		EA	LF	CY
R12.7 TO R12.9	SB	3	2	0	2	36	0	32	0.67	11
R13.0 TO R13.1		3	1	2,2,3	8	18	126	64	0.67	43
R13.2 TO R13.3		3	1	3,3,2,2	11	18	180	80	0.67	59
R13.4 TO R13.5		3	0	2,4,3,2,3	14	0	252	80	0.67	75
R13.6 TO R13.7		3	0	2,2,4,5,2	15	0	270	80	0.67	80
R13.8 TO R13.9		3	4	4,2,2,2	14	72	180	128	0.67	75
R14.0 TO R14.1		3	3	2,3	8	54	90	80	0.67	43
R14.2 TO R14.3		3	3	2,2	7	54	72	80	0.67	38
R14.4 TO R14.5		3	1	5,2,3	11	18	180	64	0.67	59
R14.6 TO R14.7		3	0	9,2,2,3,4	20	0	360	80	0.67	107
R14.8 TO R14.9		3	1	3,6,2,8	20	18	342	80	0.67	107
R15.0 TO R15.2		3	2	2	4	36	36	48	0.67	21
TOTAL					134			896		718

(N) = NOT A SEPARATE PAY ITEM; FOR INFORMATION ONLY.

SUMMARY OF QUANTITIES

Q-1

REVISED BY | DATE REVISED
CALCULATED-DESIGNED BY | CHECKED BY
ATSEDE AYALEW | BINH HONG
FUNCTIONAL SUPERVISOR
VIJITH THILAKARATNE
STATE OF CALIFORNIA - DEPARTMENT OF TRANSPORTATION
Caltrans
DESIGN

LAST REVISION | DATE PLOTTED => 26-JAN-2012
05-08-11 | TIME PLOTTED => 15:40

BORDER LAST REVISED 7/2/2010 | USERNAME => s135695 | DGN FILE => 0400020690pa001.dgn | RELATIVE BORDER SCALE IS IN INCHES 0 1 2 3 | UNIT 0976 | PROJECT NUMBER & PHASE 04000206901

DIST	COUNTY	ROUTE	POST MILES TOTAL PROJECT	SHEET NO.	TOTAL SHEETS
04	Ala	680	R12.7/R15.4	7	16

William K. Farnbach
REGISTERED CIVIL ENGINEER

May 15, 2009
PLANS APPROVAL DATE

REGISTERED PROFESSIONAL ENGINEER — William K. Farnbach — No. C49042 — Exp. 9-30-10 — CIVIL — STATE OF CALIFORNIA

The State of California or its officers or agents shall not be responsible for the accuracy or completeness of electronic copies of this plan sheet.

To accompany plans dated 1-23-12

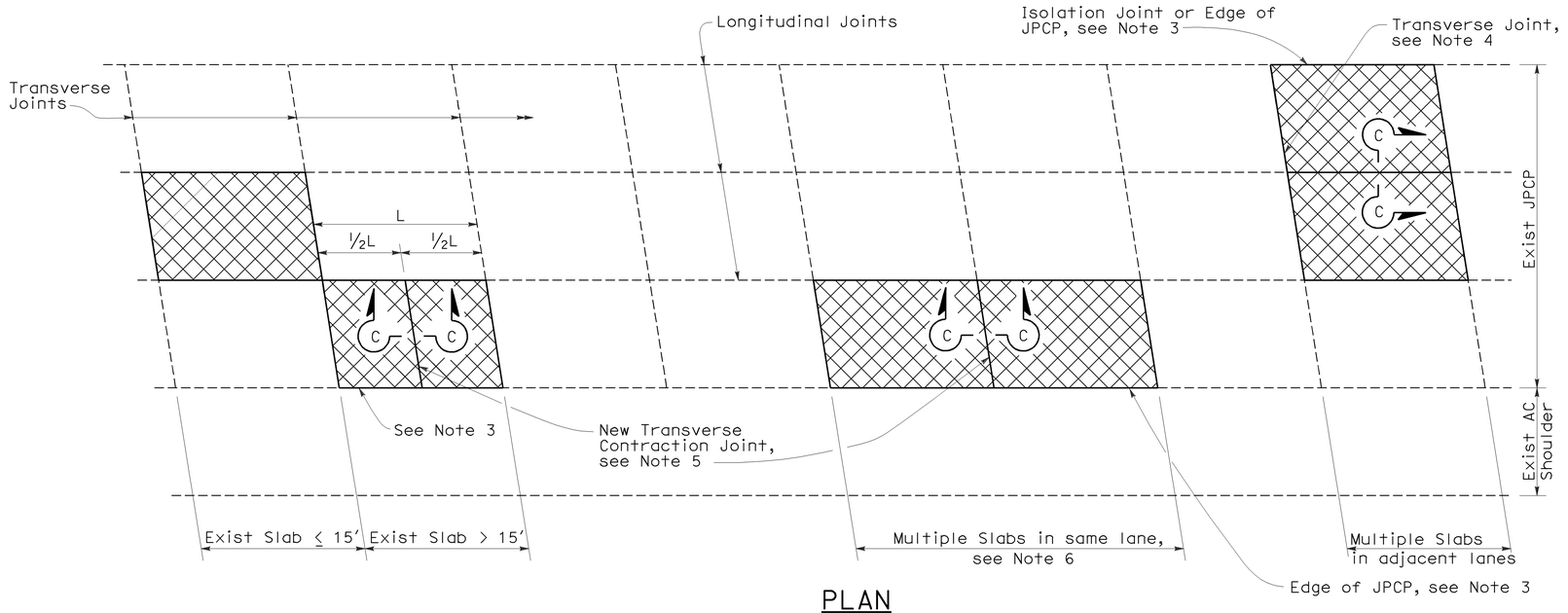

PLAN

NOTES:

1. For details not shown, see Revised Standard Plan RSP P10.
2. Where the existing outer shoulder pavement is asphalt concrete pavement, the "a" dimension shall be 1′-0" and the "b" dimension shall be 2′-0".
3. Side forms shall be used where edge of pavement is adjacent to asphalt concrete.
4. For detail, see Transverse Construction Joint for existing concrete pavement detail on Revised Standard Plan RSP P10.
5. Transverse joint to match skew of existing joint. Omit dowel bars.
6. This Standard Plan only applicable when replacing multiple slabs in the same lane is less than 100′.

LEGEND

Replace Concrete Pavement (See Slab Layout Detail)

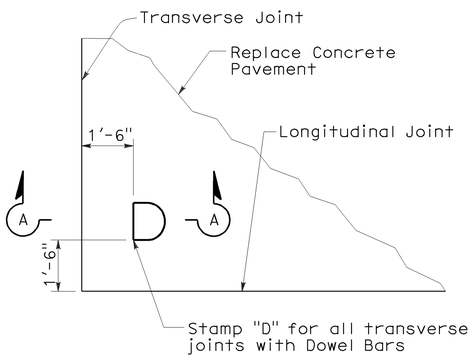

DOWEL STAMP DETAIL

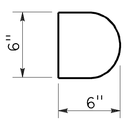

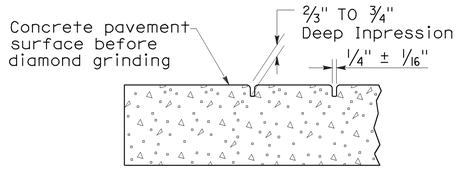

SECTION A-A

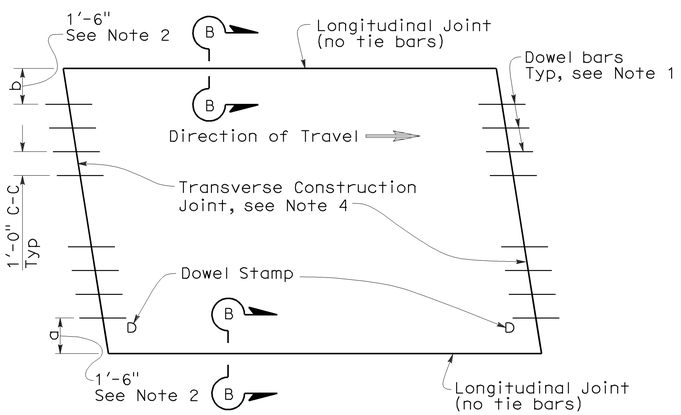

TYPE I
(traffic lane lines match longitudinal joints)

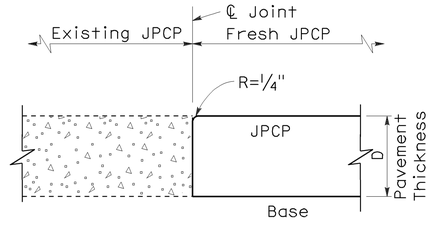

SECTION B-B

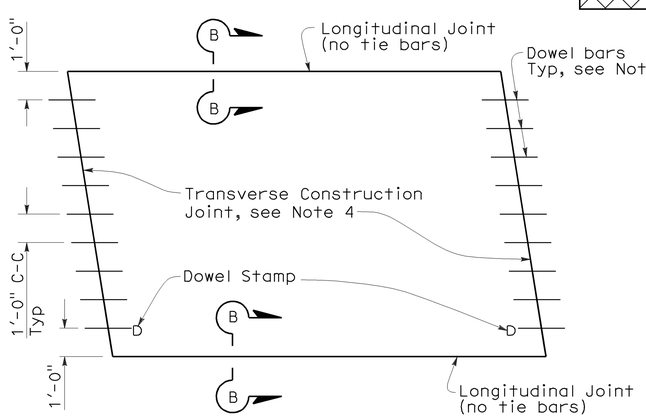

TYPE II
(traffic lane lines do not match longitudinal joints)

SLAB LAYOUT

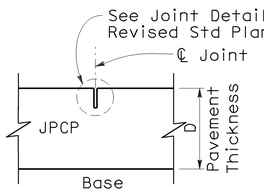

SECTION C-C

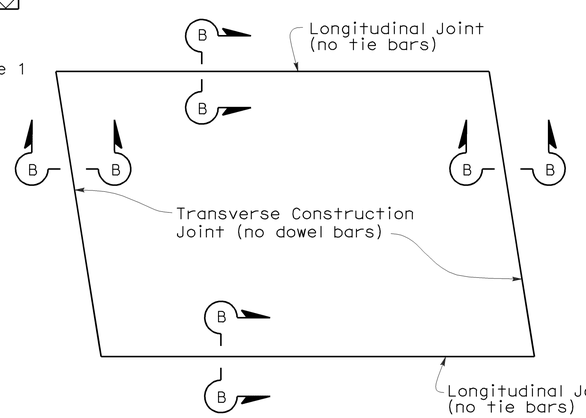

TYPE III
(for short term repairs < 5 yrs design life or for slab replacements with a cracking and seating operation)

STATE OF CALIFORNIA
DEPARTMENT OF TRANSPORTATION

JOINTED PLAIN CONCRETE PAVEMENT-INDIVIDUAL SLAB REPLACEMENT

NO SCALE

RSP P8 DATED MAY 15, 2009 SUPERSEDES RSP P8 DATED SEPTEMBER 1, 2006 AND STANDARD PLAN P8 DATED MAY 1, 2006 - PAGE 123 OF THE STANDARD PLANS BOOK DATED MAY 2006.

REVISED STANDARD PLAN RSP P8

2006 REVISED STANDARD PLAN P8

5-8-09

NOTE:

1. Tie bars, dowel bars, and reinforcement are not shown in joint seal details, see Revised Standard Plans RSP P1, RSP P3, RSP P10, RSP P35, RSP P45, or RSP P46 as applicable.

DIST	COUNTY	ROUTE	POST MILES TOTAL PROJECT	SHEET NO.	TOTAL SHEETS
04	Ala	680	R12.7/R15.4	8	16

William K. Farnbach
REGISTERED CIVIL ENGINEER

May 15, 2009
PLANS APPROVAL DATE

REGISTERED PROFESSIONAL ENGINEER — William K. Farnbach — No. C49042 — Exp. 9-30-10 CIVIL — STATE OF CALIFORNIA

The State of California or its officers or agents shall not be responsible for the accuracy or completeness of electronic copies of this plan sheet.

To accompany plans dated 1-23-12

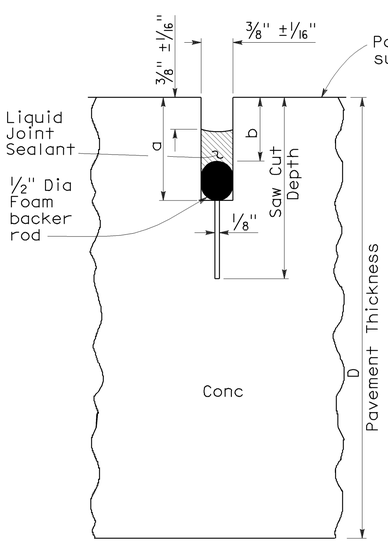

LIQUID SEALANT

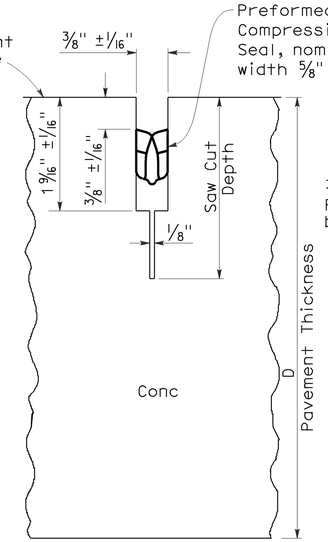

COMPRESSION SEAL

TYPE A1

Transverse Contraction Joints

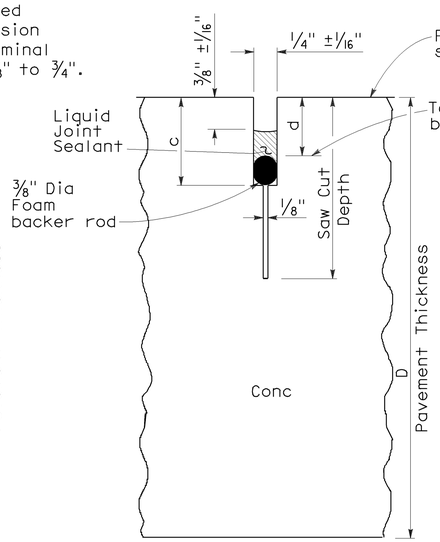

LIQUID SEALANT

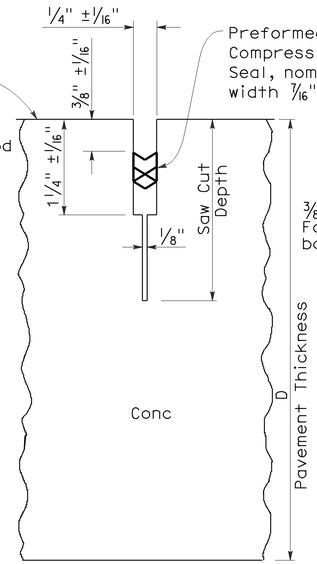

COMPRESSION SEAL

TYPE A2

Longitudinal Contraction Joints

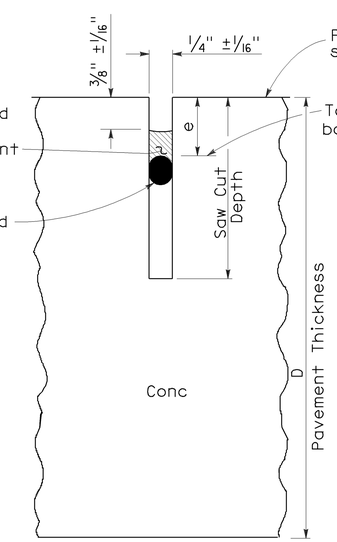

LIQUID SEALANT

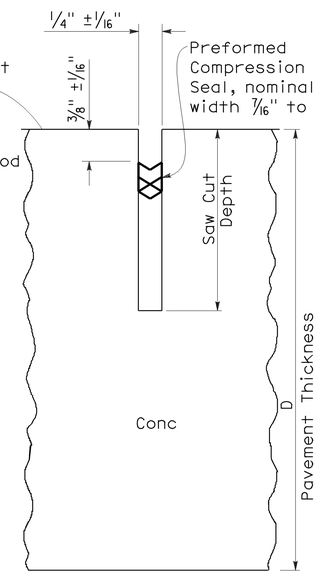

COMPRESSION SEAL

TYPE B

Longitudinal or Transverse Contraction Joint

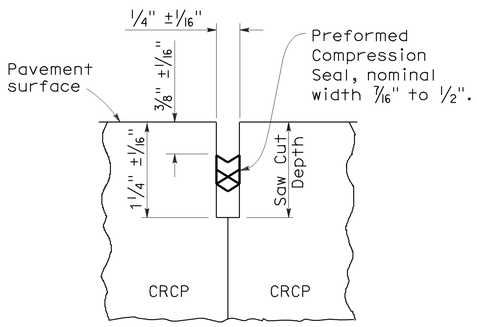

COMPRESSION SEAL

TYPE C

Transverse and Longitudinal Construction Joints (For CRCP)

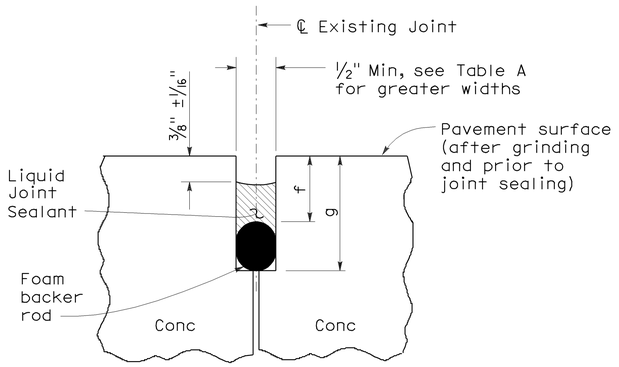

LIQUID SEALANT

TYPE R

Retrofit Transverse and Longitudinal Joints

LIQUID SEALANT RESERVOIR DEPTH

LIQUID SEALANT MATERIAL	3/8" Joint Width Type A1		1/4" Joint Width Type A2		1/4" Joint Width Type B
	DIMENSION		DIMENSION		DIMENSION
	a	b	c	d	e
SILCONE	1" ±1/16"	5/8" ±1/16"	15/16" ±1/16"	9/16" ±1/16"	9/16" ±1/16"
ASPHALT RUBBER	1 3/16" ±1/16"	3/4" ±1/16"	1 1/16" ±1/16"	11/16" ±1/16"	11/16" ±1/16"

TABLE A (TYPE R JOINT)

Sawn Joint Width	Backer Rod Diameter ± 1/16"	DIMENSION "f"	DIMENSION "g"
1"	1 5/16"	7/8"	2 1/4"
7/8"	1 3/16"	13/16"	2"
3/4"	1"	3/4"	1 3/4"
5/8"	7/8"	11/16"	1 1/2"
1/2"	11/16"	5/8"	1 1/4"

STATE OF CALIFORNIA
DEPARTMENT OF TRANSPORTATION

CONCRETE PAVEMENT-JOINT DETAILS

NO SCALE

RSP P20 DATED MAY 15, 2009 SUPERSEDES STANDARD PLAN P20 DATED MAY 1, 2006 - PAGE 128 OF THE STANDARD PLANS BOOK DATED MAY 2006.

REVISED STANDARD PLAN RSP P20

2006 REVISED STANDARD PLAN RSP P20

5-8-09

DIST	COUNTY	ROUTE	POST MILES TOTAL PROJECT	SHEET NO.	TOTAL SHEETS
04	Ala	680	R12.7/R15.4	9	16

Randell D. Hiatt
REGISTERED CIVIL ENGINEER

June 6, 2008
PLANS APPROVAL DATE

Randell D. Hiatt
No. C50200
Exp. 6-30-09
CIVIL
REGISTERED PROFESSIONAL ENGINEER
STATE OF CALIFORNIA

The State of California or its officers or agents shall not be responsible for the accuracy or completeness of electronic copies of this plan sheet.

To accompany plans dated 1-23-12

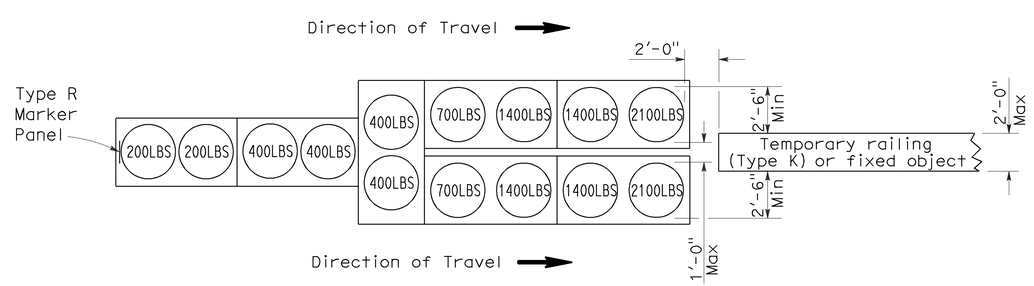

ARRAY 'TU14'

Approach speed 45 mph or more

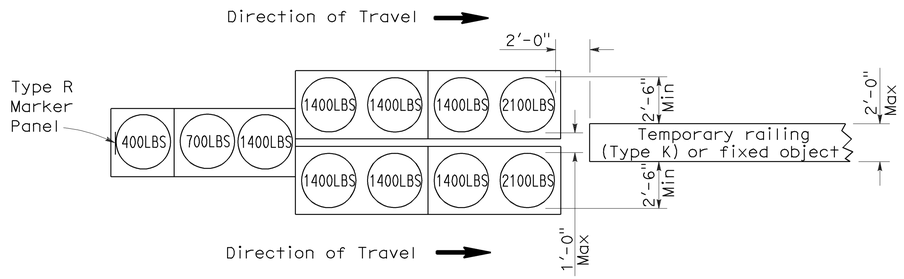

ARRAY 'TU11'

Approach speed less than 45 mph

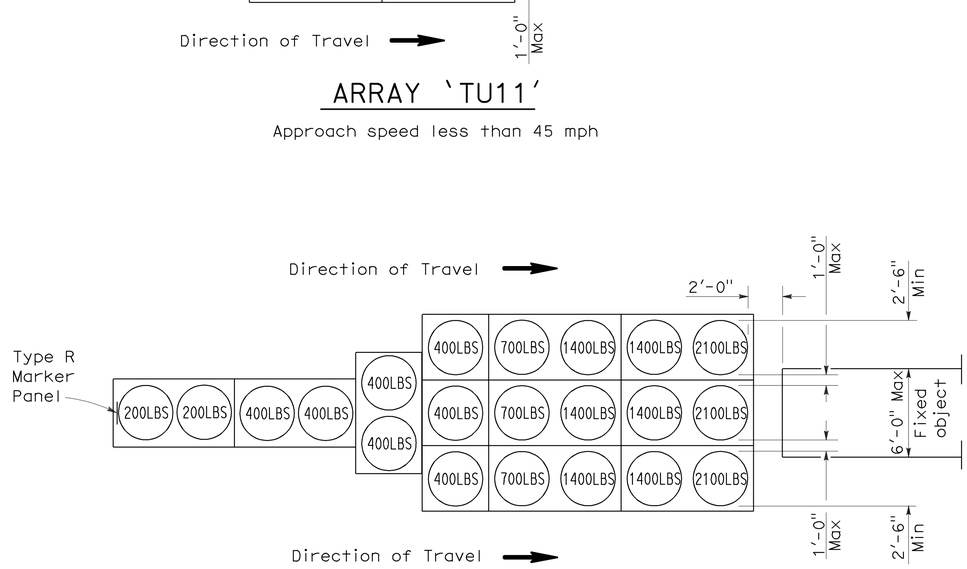

ARRAY 'TU21'

Approach speed 45 mph or more

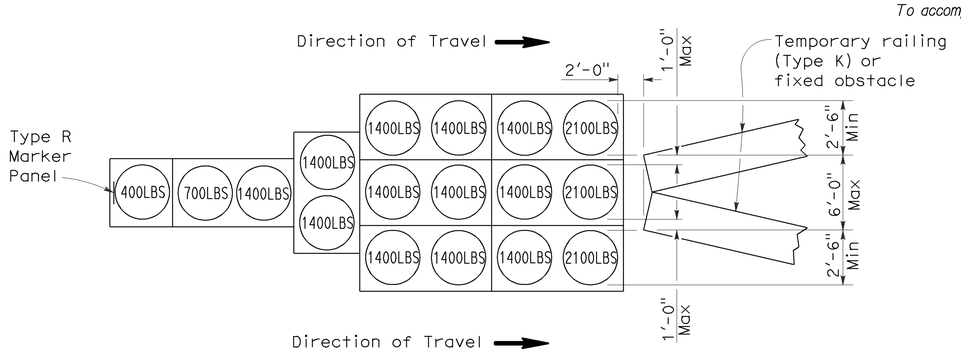

ARRAY 'TU17'

Approach speed less than 45 mph

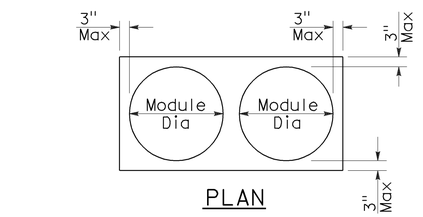

PLAN

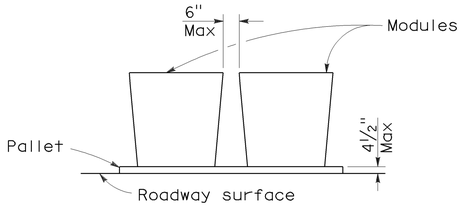

ELEVATION

CRASH CUSHION PALLET DETAIL

See Note 7

NOTES:

1. (XXX) Indicates sand filled module location and weight of sand in pounds for each module. Module spacing is based on the greater diameter of the module.
2. All sand weights are nominal.
3. Temporary crash cushion arrays shall not encroach on the traveled way.
4. Place the top of Type R marker panel 1" below the module lid.
5. Refer to Standard Plan A73B for marker details.
6. Approach speeds indicated conform to NCHRP 350 Report criteria.
7. Use of pallets is optional.

STATE OF CALIFORNIA
DEPARTMENT OF TRANSPORTATION

TEMPORARY CRASH CUSHION, SAND FILLED (UNIDIRECTIONAL)

NO SCALE

RSP T1A DATED JUNE 6, 2008 SUPERSEDES STANDARD PLAN T1A
DATED MAY 1, 2006 - PAGE 211 OF THE STANDARD PLANS BOOK DATED MAY 2006.

REVISED STANDARD PLAN RSP T1A

2006 REVISED STANDARD PLAN RSP T1A

5-15-08

DIST	COUNTY	ROUTE	POST MILES TOTAL PROJECT	SHEET NO.	TOTAL SHEETS
04	Ala	680	R12.7/R15.4	10	16

Randell D. Hiatt
REGISTERED CIVIL ENGINEER

June 6, 2008
PLANS APPROVAL DATE

Randell D. Hiatt
No. C50200
Exp. 6-30-09
CIVIL
REGISTERED PROFESSIONAL ENGINEER
STATE OF CALIFORNIA

The State of California or its officers or agents shall not be responsible for the accuracy or completeness of electronic copies of this plan sheet.

To accompany plans dated 1-23-12

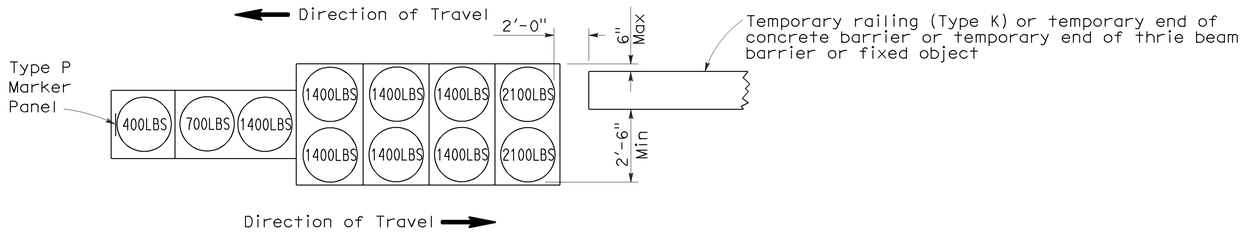

ARRAY 'TB11'

Approach speed less than 45 mph

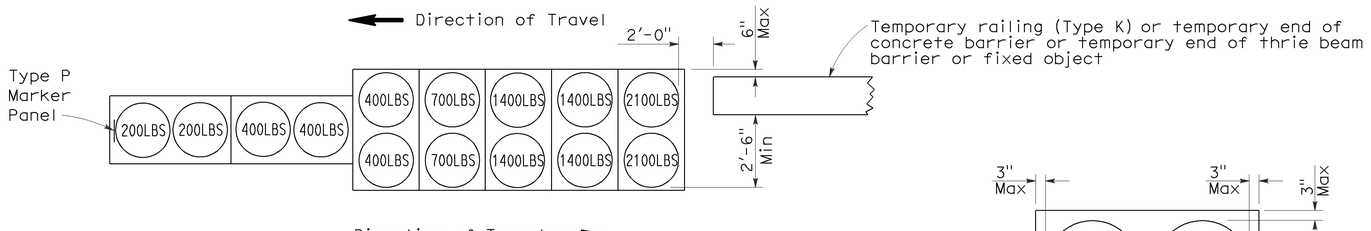

ARRAY 'TB14'

Approach speed 45 mph or more

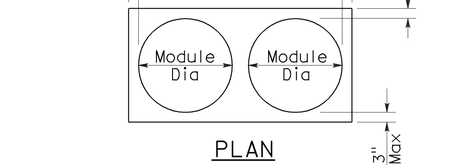

PLAN

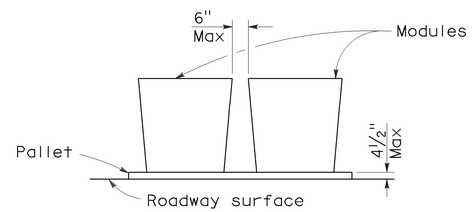

ELEVATION

CRASH CUSHION PALLET DETAIL

See Note 7

NOTES:

1. (XXX) Indicates sand filled module location and weight of sand in pounds for each module. Module spacing is based on the greater diameter of the module.
2. All sand weights are nominal.
3. Temporary crash cushion arrays shall not encroach on the traveled way.
4. Place the Type P marker panel so that the bottom of the panel rests upon the pallet.
5. Refer to Standard Plan A73B for marker details.
6. Approach speeds indicated conform to NCHRP 350 Report criteria.
7. Use of pallets is optional.

STATE OF CALIFORNIA
DEPARTMENT OF TRANSPORTATION

TEMPORARY CRASH CUSHION, SAND FILLED (BIDIRECTIONAL)

NO SCALE

RSP T1B DATED JUNE 6, 2008 SUPERSEDES STANDARD PLAN T1B
DATED MAY 1, 2006 - PAGE 212 OF THE STANDARD PLANS BOOK DATED MAY 2006.

REVISED STANDARD PLAN RSP T1B

2006 REVISED STANDARD PLAN RSP T1B

5-15-08

DIST	COUNTY	ROUTE	POST MILES TOTAL PROJECT	SHEET NO.	TOTAL SHEETS
04	Ala	680	R12.7/R15.4	11	16

Randell D. Hiatt
REGISTERED CIVIL ENGINEER

June 6, 2008
PLANS APPROVAL DATE

REGISTERED PROFESSIONAL ENGINEER
Randell D. Hiatt
No. C50200
Exp. 6-30-09
CIVIL
STATE OF CALIFORNIA

The State of California or its officers or agents shall not be responsible for the accuracy or completeness of electronic copies of this plan sheet.

To accompany plans dated 1-23-12

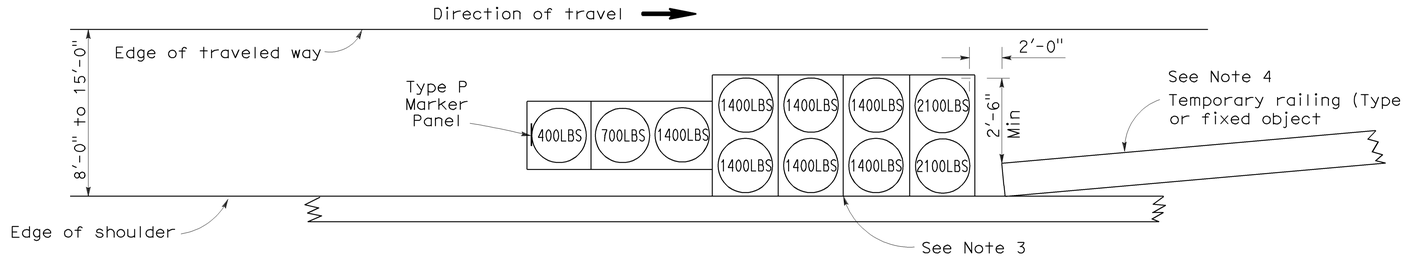

ARRAY 'TS11'

Approach speed less than 45 mph
See Note 9

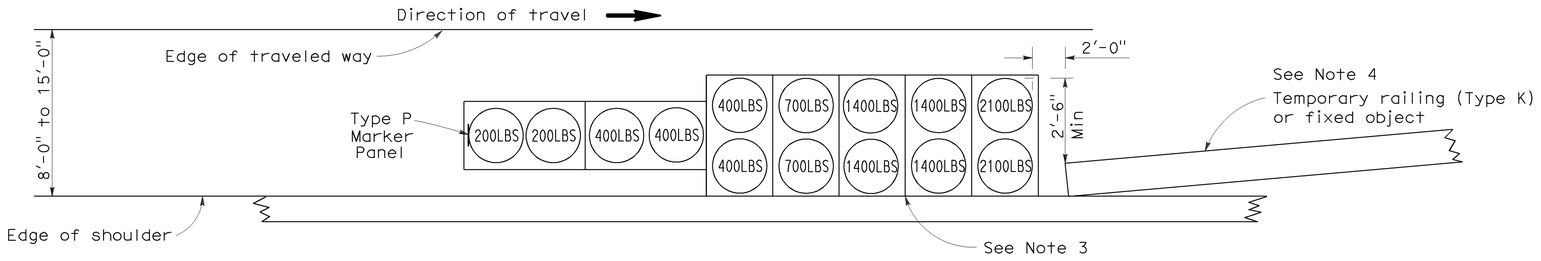

ARRAY 'TS14'

Approach speed 45 mph or more
See Note 9

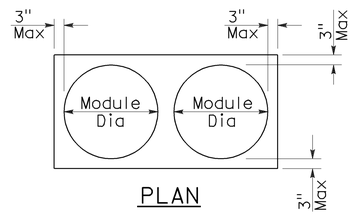

PLAN

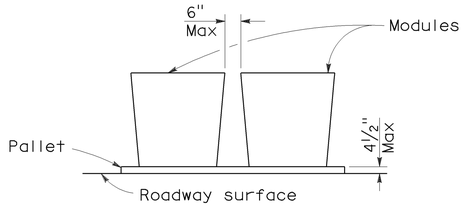

ELEVATION

CRASH CUSHION PALLET DETAIL

See Note 11

NOTES:

1. (XXX) Indicates sand filled module location and weight of sand in pounds for each module. Module spacing is based on the greater diameter of the module.
2. All sand weights are nominal.
3. The temporary crash cushion arrays shown on this plan shall be used only in locations where there will be traffic on one side of the temporary crash cushion array.
4. If the fixed object or approach end of the temporary railing is less than 15'-0" from the edge of traveled way, a temporary crash cushion is required in a construction or work zone.
5. Temporary crash cushion arrays shall not encroach on the traveled way.
6. Arrays for median shoulders shall conform to details shown on this plan for outside shoulders.
7. Place the Type P marker panel so that the bottom of the panel rests upon the pallet and faces traffic.
8. Refer to Standard Plan A73B for marker details.
9. For shoulder widths less than 8'-0", appropriate approved crash cushion protection, other than sand filled modules, shall be provided at fixed objects and at approach ends of temporary railing. The specific type of crash cushion shall be as shown on the project plans or as specified in the Special Provisions, or if not shown on the project plans or specified in the Special Provisions, shall be as approved by the Engineer.
10. Approach speeds indicated conform to NCHRP 350 Report criteria.
11. Use of pallets is optional.

STATE OF CALIFORNIA
DEPARTMENT OF TRANSPORTATION

TEMPORARY CRASH CUSHION, SAND FILLED (SHOULDER INSTALLATIONS)

NO SCALE

RSP T2 DATED JUNE 6, 2008 SUPERSEDES STANDARD PLAN T2
DATED MAY 1, 2006 - PAGE 213 OF THE STANDARD PLANS BOOK DATED MAY 2006.

REVISED STANDARD PLAN RSP T2

2006 REVISED STANDARD PLAN RSP T2

5-15-08

Dist	COUNTY	ROUTE	POST MILES TOTAL PROJECT	SHEET No.	TOTAL SHEETS
04	Ala	680	R12.7/R15.4	12	16

Randell D. Hiatt
REGISTERED CIVIL ENGINEER

May 20, 2011
PLANS APPROVAL DATE

REGISTERED PROFESSIONAL ENGINEER
Randell D. Hiatt
No. C50200
Exp. 6-30-11
CIVIL
STATE OF CALIFORNIA

The State of California or its officers or agents shall not be responsible for the accuracy or completeness of electronic copies of this plan sheet.

To accompany plans dated 1-23-12

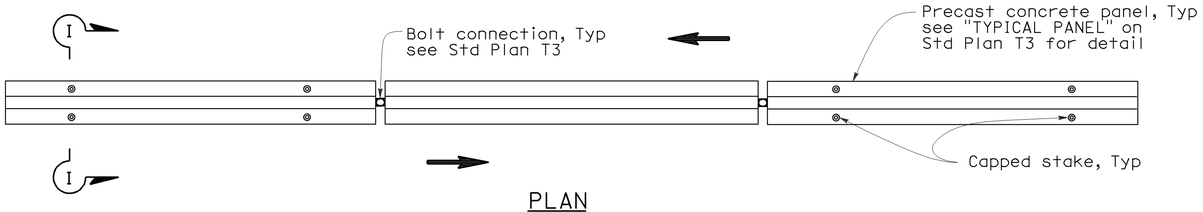

PLAN

RAILING STAKING CONFIGURATION FOR TWO-WAY TRAFFIC

See Note 1

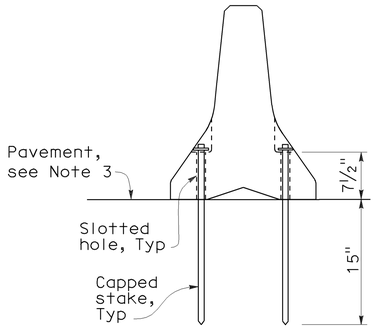

SECTION I-I

NOTES:

1. Where Type K Temporary Railing is placed as a temporary or long term barrier in two-way traffic on highways with less than 24" from the edge of traveled way, use four capped stakes per every other panel with end panels staked.
2. Where Type K Temporary Railing is placed 3" to 24" from the edge of an excavation on highways, use two capped stakes per panel along the traffic side.
3. Staked Type K Temporary Railing must be supported by at least 4" thick concrete, hot mix asphalt or existing asphalt concrete pavement.
4. The minimum yield strength for the washer must be 60,000 psi.
5. Direction of adjacent traffic indicated by ⟹.

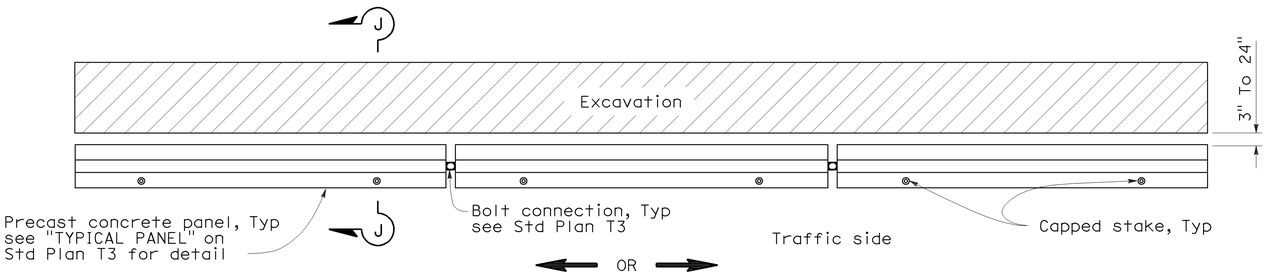

PLAN

RAILING STAKING CONFIGURATION ADJACENT TO AN EXCAVATION

See Note 2

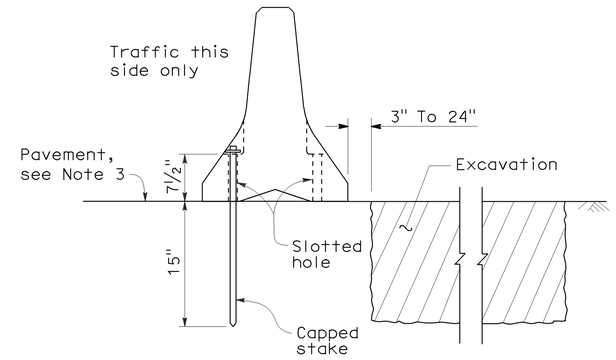

SECTION J-J

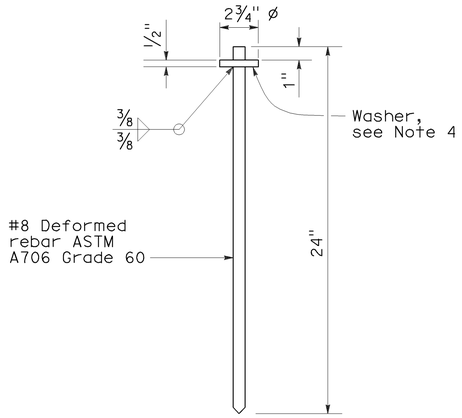

CAPPED STAKE DETAIL

STATE OF CALIFORNIA
DEPARTMENT OF TRANSPORTATION

TEMPORARY RAILING (TYPE K)

NO SCALE

NSP T3A DATED MAY 20, 2011 SUPPLEMENTS
THE STANDARD PLANS BOOK DATED MAY 2006.

NEW STANDARD PLAN NSP T3A

2006 NEW STANDARD PLAN NSP T3A

8-31-10

DIST	COUNTY	ROUTE	POST MILES TOTAL PROJECT	SHEET NO.	TOTAL SHEETS
04	Ala	680	R12.7/R15.4	13	16

Robert B Schott
LICENSED LANDSCAPE ARCHITECT

August 15, 2008
PLANS Approval DATE

LICENSED LANDSCAPE ARCHITECT
Robert B. Schott 3695
Signature
11-04-08
Renewal Date
08-11-08
Date
STATE OF CALIFORNIA

The State of California or its officers or agents shall not be responsible for the accuracy or completeness of electronic copies of this plan sheet.

To accompany plans dated 1-23-12

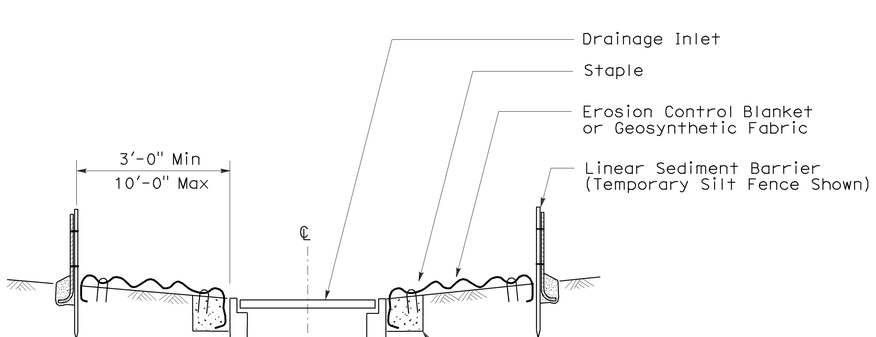

SECTION A-A

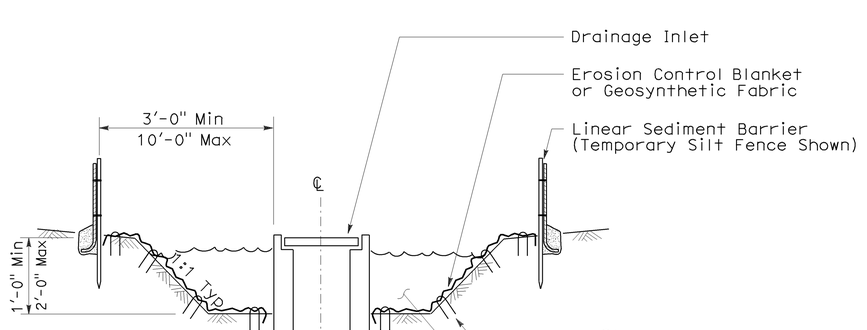

SECTION B-B

NOTES:

1. See Standard Plan T51 for Temporary Silt Fence.
2. Dimensions may vary to fit field conditions.

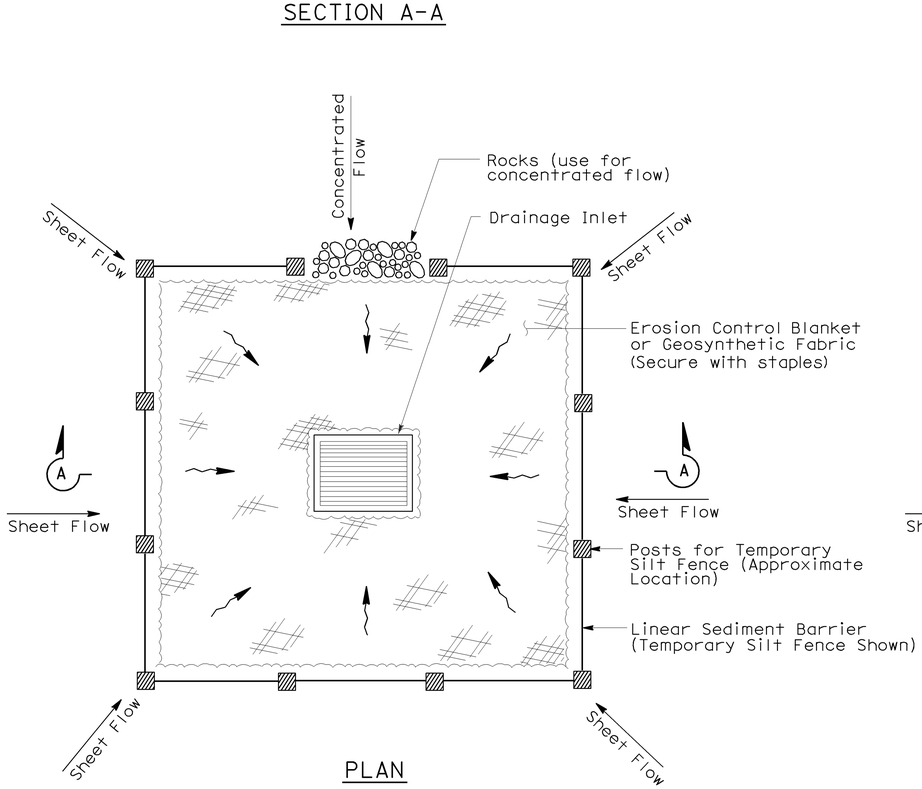

PLAN

TEMPORARY DRAINAGE INLET PROTECTION (TYPE 1)

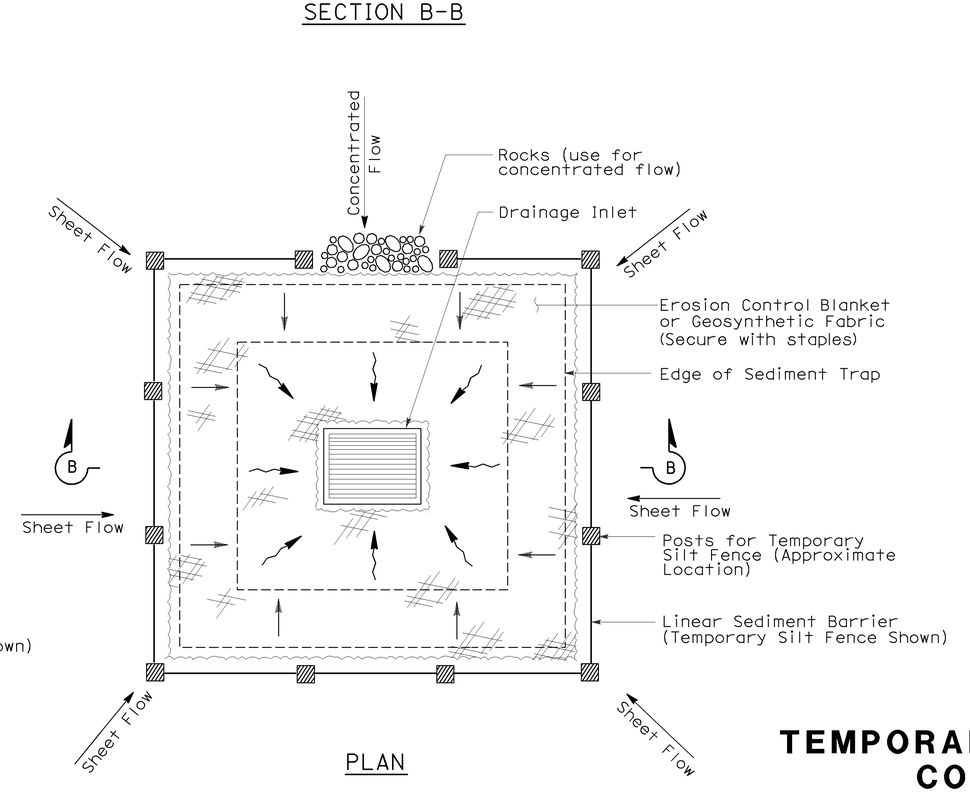

PLAN

TEMPORARY DRAINAGE INLET PROTECTION (TYPE 2) (EXCAVATED SEDIMENT TRAP)

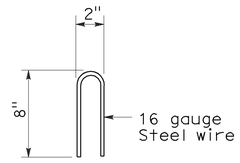

STAPLE DETAIL

STATE OF CALIFORNIA
DEPARTMENT OF TRANSPORTATION

TEMPORARY WATER POLLUTION CONTROL DETAILS (TEMPORARY DRAINAGE INLET PROTECTION)

NO SCALE

Nsp t61 dated august 15, 2008 supplements the standard plans book dated may 2006.

NEW STANDARD PLAN NSP T61

2006 NEW STANDARD PLAN NSP T61

7-11-08

DIST	COUNTY	ROUTE	POST MILES TOTAL PROJECT	SHEET NO.	TOTAL SHEETS
04	Ala	680	R12.7/R15.4	14	16

Robert B Schott
LICENSED LANDSCAPE ARCHITECT

August 15, 2008
PLANS APPROVAL DATE

LICENSED LANDSCAPE ARCHITECT — Robert B. Schott 3695 — Signature — 11-04-08 Renewal Date — 08-11-08 Date — STATE OF CALIFORNIA

The State of California or its officers or agents shall not be responsible for the accuracy or completeness of electronic copies of this plan sheet.

To accompany plans dated 1-23-12

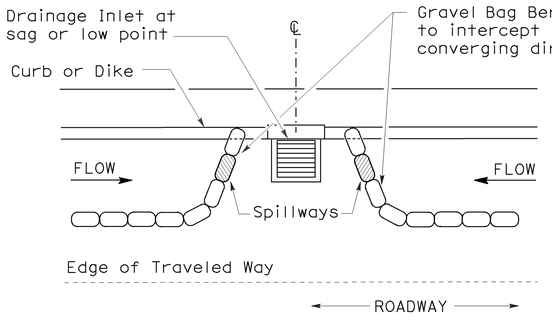

PLAN

CONFIGURATION FOR SAG POINT INLET (GRAVEL BAG BERM)

GRAVEL BAG BERM (TYPE 3A) SPACING TABLE

SLOPE OF ROADWAY (PERCENT)	1 to 3.9	4 to 5.9	6 to 7.9	8 to 10	10+
INTERVAL BETWEEN BERM	100′	75′	50′	25′	12′

For slope of less than 1%, install barriers only if erosion/sediment is prevalent

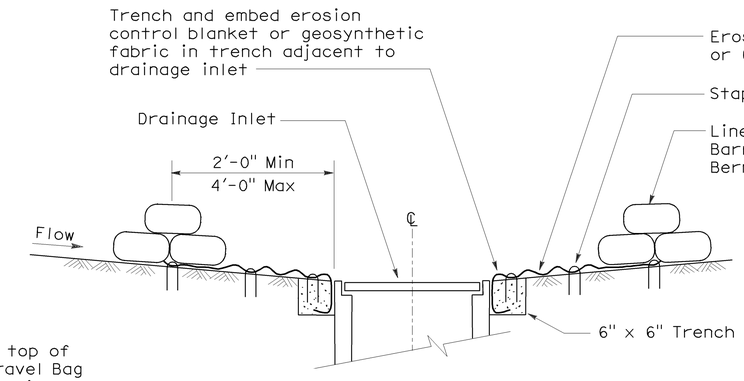

SECTION A-A

NOTES:

1. Place safety cones adjacent to drainage inlet protection.
2. Dimensions may vary to fit field conditions.
3. Install a minimum of 3 gravel bag berms upstream of each drainage inlet to be protected.
4. Position erosion control blanket or geosynthetic fabric at edge of concrete apron and secure in trench.
5. Erosion control blanket or geosynthetic fabric is not required if the area adjacent to the drainage inlet is vegetated or paved.

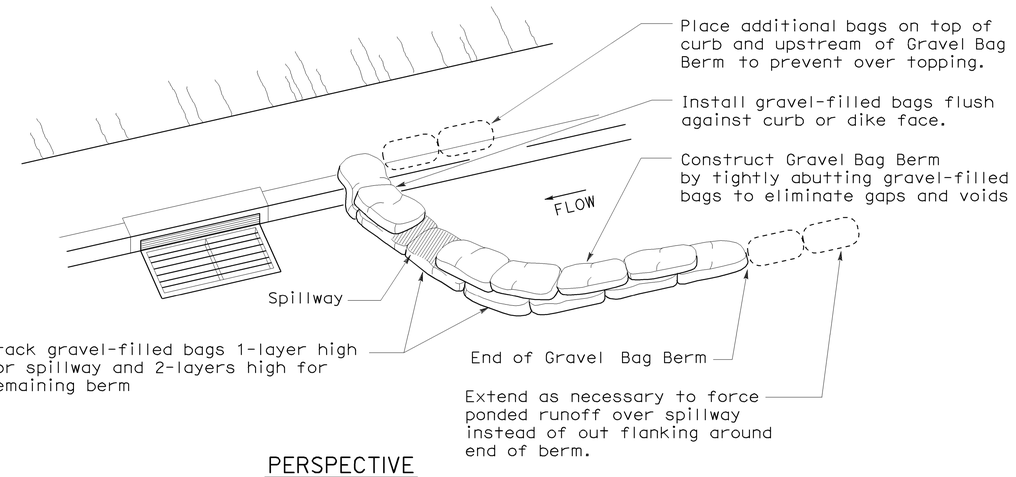

PERSPECTIVE

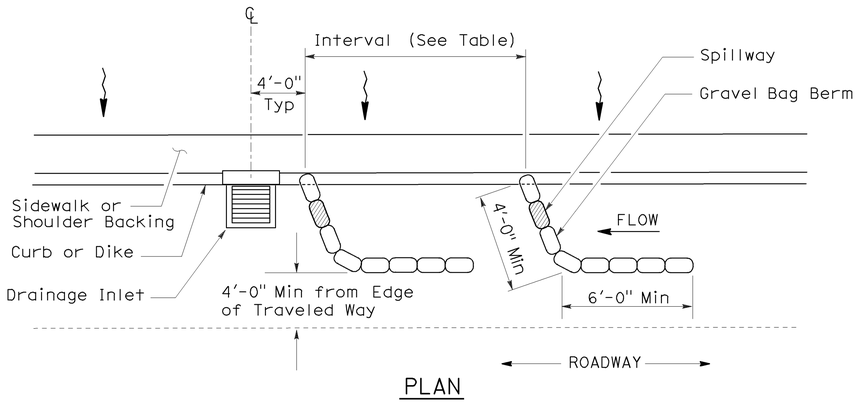

PLAN

TEMPORARY DRAINAGE INLET PROTECTION (TYPE 3A) (GRAVEL BAG BERM)

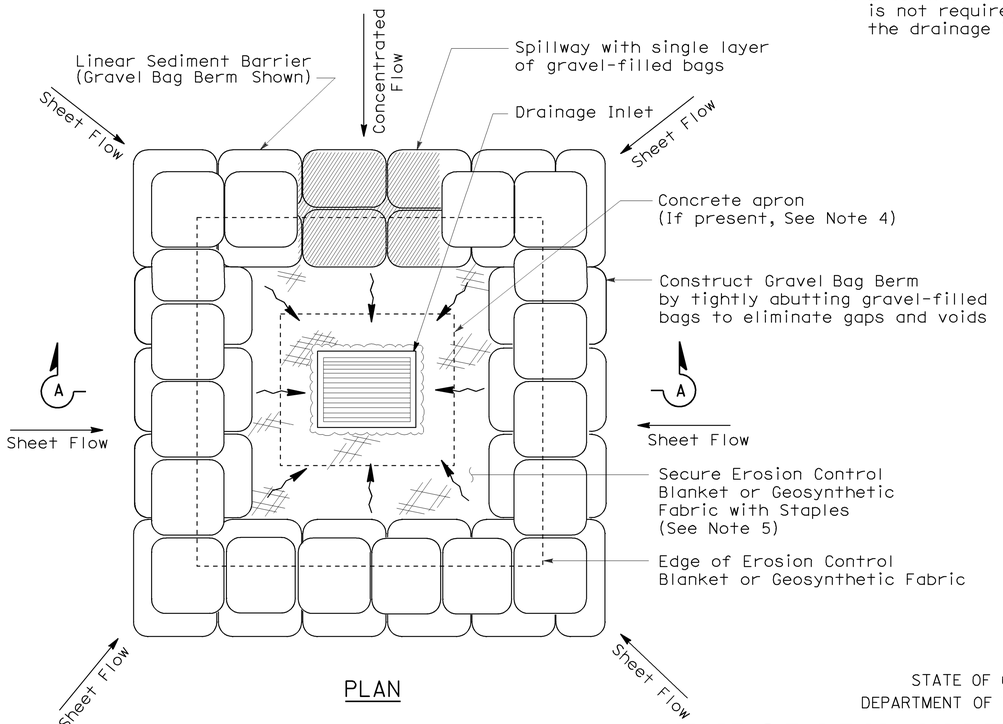

PLAN

TEMPORARY DRAINAGE INLET PROTECTION (TYPE 3B)

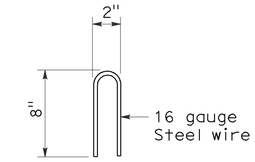

STAPLE DETAIL

STATE OF CALIFORNIA
DEPARTMENT OF TRANSPORTATION

TEMPORARY WATER POLLUTION CONTROL DETAILS (TEMPORARY DRAINAGE INLET PROTECTION)

NO SCALE

NSP T62 DATED AUGUST 15, 2008 SUPPLEMENTS THE STANDARD PLANS BOOK DATED MAY 2006.

NEW STANDARD PLAN NSP T62

2006 NEW STANDARD PLAN NSP T62

7-11-08

DIST	COUNTY	ROUTE	POST MILES TOTAL PROJECT	SHEET NO.	TOTAL SHEETS
04	Ala	680	R12.7/R15.4	15	16

Robert B Schott
LICENSED LANDSCAPE ARCHITECT

August 15, 2008
PLANS APPROVAL DATE

LICENSED LANDSCAPE ARCHITECT
Robert B. Schott 3695
Signature
11-04-08
Renewal Date
08-11-08
Date
STATE OF CALIFORNIA

The State of California or its officers or agents shall not be responsible for the accuracy or completeness of electronic copies of this plan sheet.

To accompany plans dated 1-23-12

FLEXIBLE SEDIMENT BARRIER SPACING TABLE

SLOPE OF ROADWAY (PERCENT)	0 to 0.9	1 to 1.9	2 to 2.9	3 to 4	5+
INTERVAL BETWEEN BARRIERS	50′	35′	30′	25′	20′
ANGLE FROM FACE OF CURB	70°	70°	70°	45°	45°
SUGGESTED BARRIER LENGTH	6′	6′	6′	6′	6′

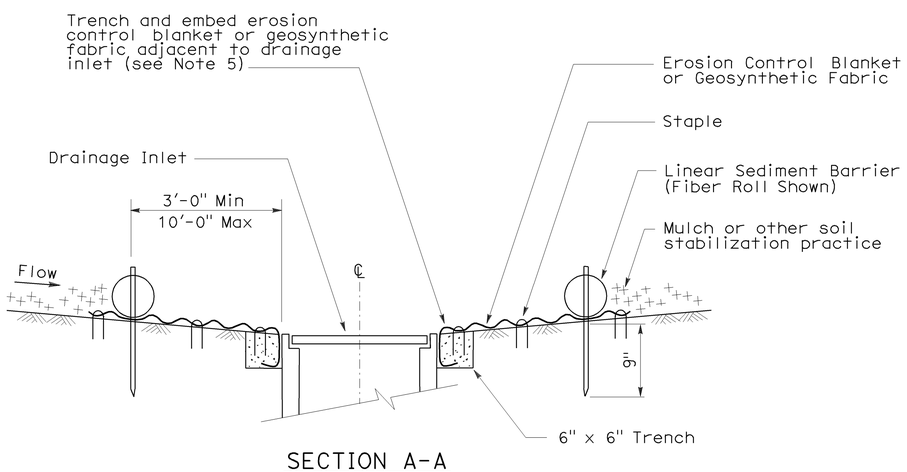

SECTION A-A

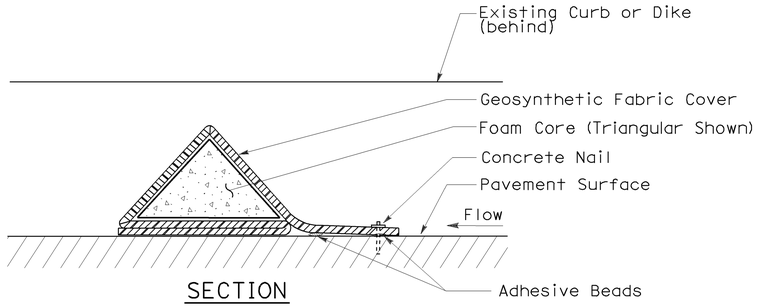

SECTION

FLEXIBLE SEDIMENT BARRIER DETAIL
(FOAM BARRIER SHOWN)

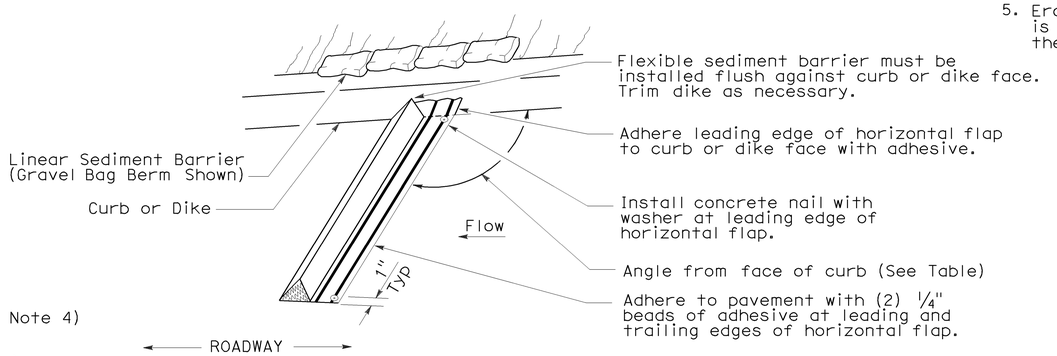

PERSPECTIVE

NOTES:

1. See Standard Plan T51 for Temporary Silt Fence.
2. Dimensions may vary to fit field conditions.
3. Install a minimum of 3 flexible sediment barriers upstream of each drainage inlet to be protected.
4. Position erosion control blanket or geosynthetic fabric at edge of concrete apron and secure in trench.
5. Erosion control blanket or geosynthetic fabric is not required if the area adjacent to the drainage inlet is vegetated.

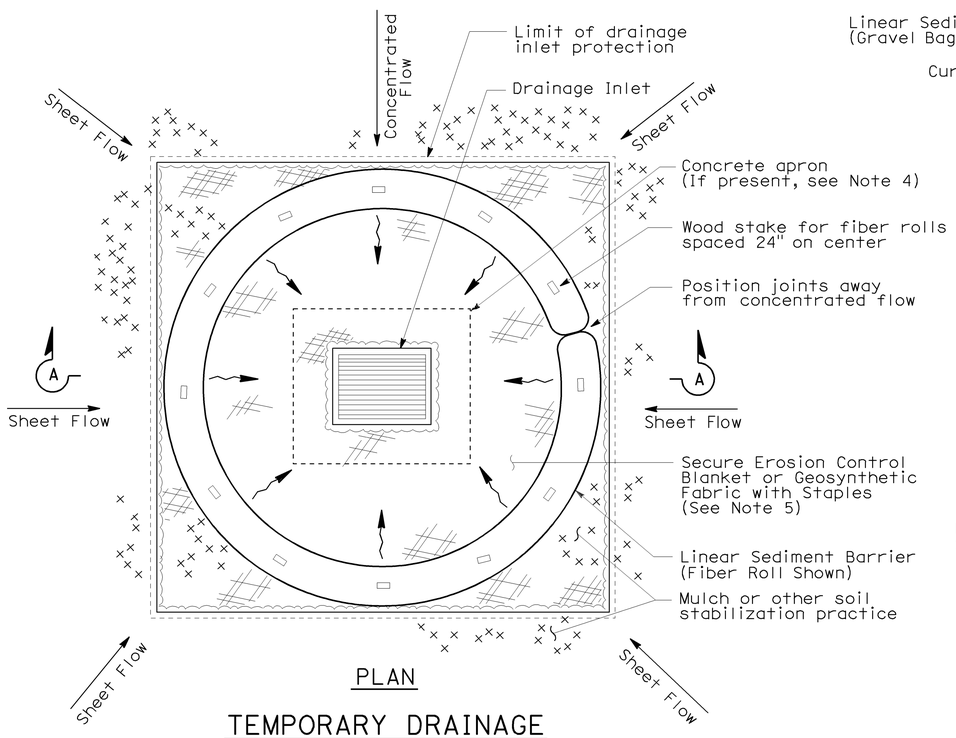

PLAN

TEMPORARY DRAINAGE
INLET PROTECTION (TYPE 4A)

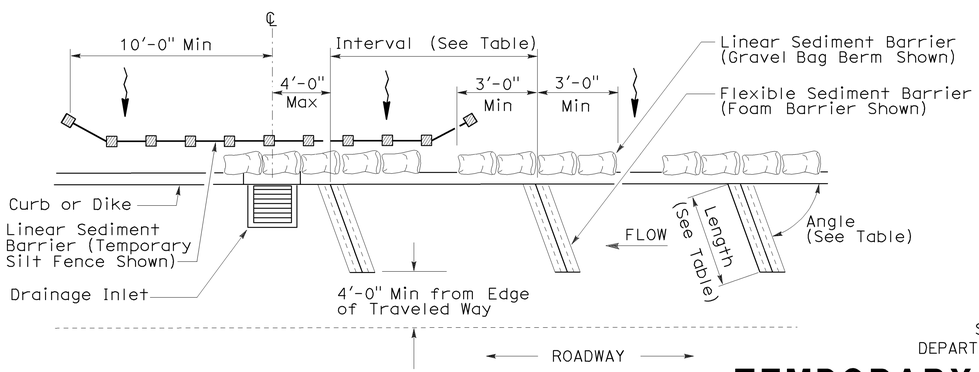

PLAN

TEMPORARY DRAINAGE
INLET PROTECTION (TYPE 4B)
FLEXIBLE SEDIMENT BARRIER

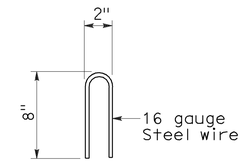

STAPLE DETAIL

STATE OF CALIFORNIA
DEPARTMENT OF TRANSPORTATION

TEMPORARY WATER POLLUTION CONTROL DETAILS (TEMPORARY DRAINAGE INLET PROTECTION)

NO SCALE

NSP T63 DATED AUGUST 15, 2008 SUPPLEMENTS
THE STANDARD PLANS BOOK DATED MAY 2006.

NEW STANDARD PLAN NSP T63

2006 NEW STANDARD PLAN NSP T63

7-11-08

DIST	COUNTY	ROUTE	POST MILES TOTAL PROJECT	SHEET NO.	TOTAL SHEETS
04	Ala	680	R12.7/R15.4	16	16

Robert B Schott
LICENSED LANDSCAPE ARCHITECT

August 15, 2008
PLANS APPROVAL DATE

LICENSED LANDSCAPE ARCHITECT
Robert B. Schott 3695
Robert B Schott
Signature
11-04-08
Renewal Date
08-11-08
Date
STATE OF CALIFORNIA

The State of California or its officers or agents shall not be responsible for the accuracy or completeness of electronic copies of this plan sheet.

To accompany plans dated 1-23-12

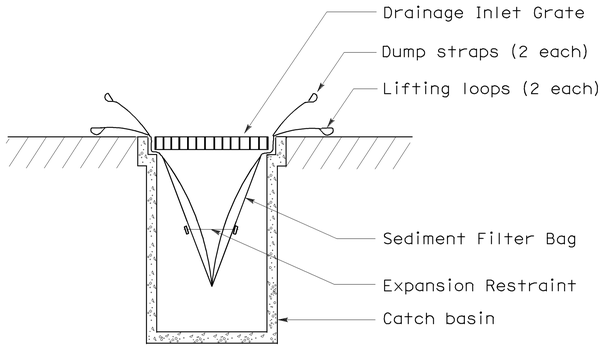

SECTION B-B

SEDIMENT FILTER BAG DETAIL

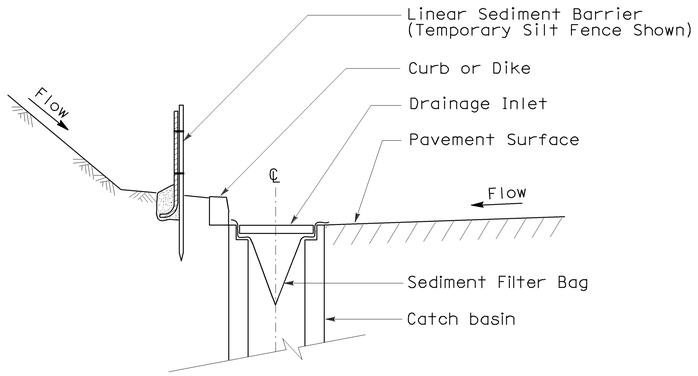

SECTION A-A

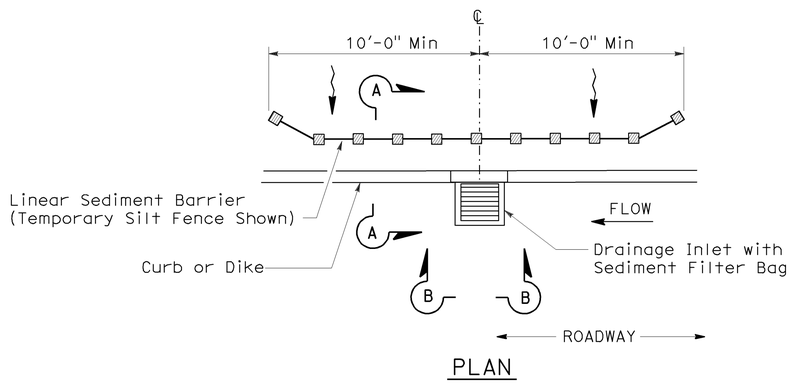

PLAN

TEMPORARY DRAINAGE INLET PROTECTION (TYPE 5) (SEDIMENT FILTER BAG)

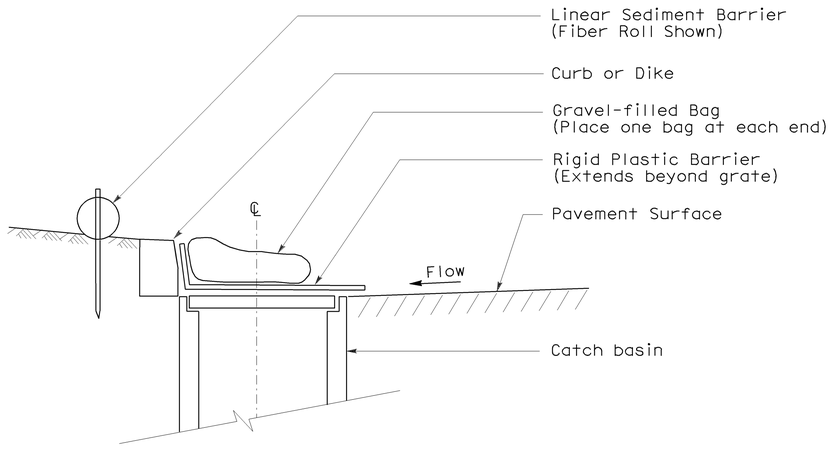

SECTION

TEMPORARY DRAINAGE INLET PROTECTION (TYPE 6A) (CATCH BASIN WITH GRATE)

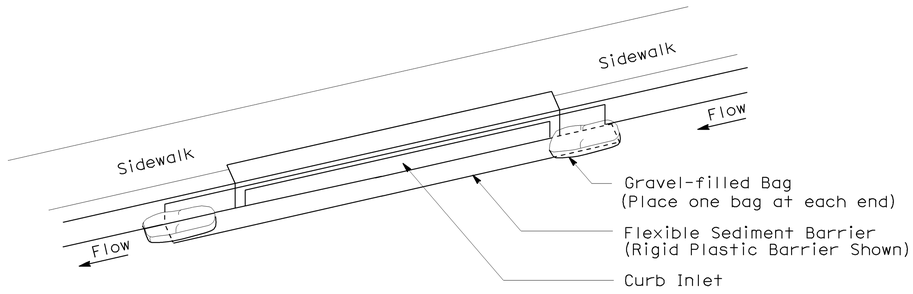

PERSPECTIVE

TEMPORARY DRAINAGE INLET PROTECTION (TYPE 6B) (CURB INLET WITHOUT GRATE)

NOTES:

1. See Standard Plan T51 for Temporary Silt Fence.
2. Dimensions may vary to fit field conditions.

STATE OF CALIFORNIA
DEPARTMENT OF TRANSPORTATION

TEMPORARY WATER POLLUTION CONTROL DETAILS (TEMPORARY DRAINAGE INLET PROTECTION)

NO SCALE

NSP T64 DATED AUGUST 15, 2008 SUPPLEMENTS
THE STANDARD PLANS BOOK DATED MAY 2006.

NEW STANDARD PLAN NSP T64

2006 NEW STANDARD PLAN NSP T64

7-11-08