ACNH-Q101(205)E

Dist	COUNTY	ROUTE	POST MILES TOTAL PROJECT	SHEET No.	TOTAL SHEETS
04	Sol	80,680	Var	1	27

STATE OF CALIFORNIA

DEPARTMENT OF TRANSPORTATION

PROJECT PLANS FOR CONSTRUCTION ON

STATE HIGHWAY

IN SOLANO COUNTY
AT VARIOUS LOCATIONS

TO BE SUPPLEMENTED BY STANDARD PLANS DATED MAY 2006

INDEX OF PLANS

SHEET No.	DESCRIPTION
1	TITLE AND LOCATION MAP
2	LOCATIONS OF CONSTRUCTION
3 - 8	CONSTRUCTION AREA SIGNS
9	PAVEMENT DELINEATION QUANTITIES
10 - 13	REVISED STANDARD PLANS
14	NEW STANDARD PLAN
	STRUCTURE PLANS
15 - 24	GENERAL PLAN
25	DECK REPAIR TABLE AND DETAILS
26	JOINT SEAL TABLE AND DETAILS
27	STRUCTURE APPROACH TYPE R (30S)

THE STANDARD PLANS LIST APPLICABLE TO THIS CONTRACT IS INCLUDED IN THE NOTICE TO BIDDERS AND SPECIAL PROVISIONS BOOK.

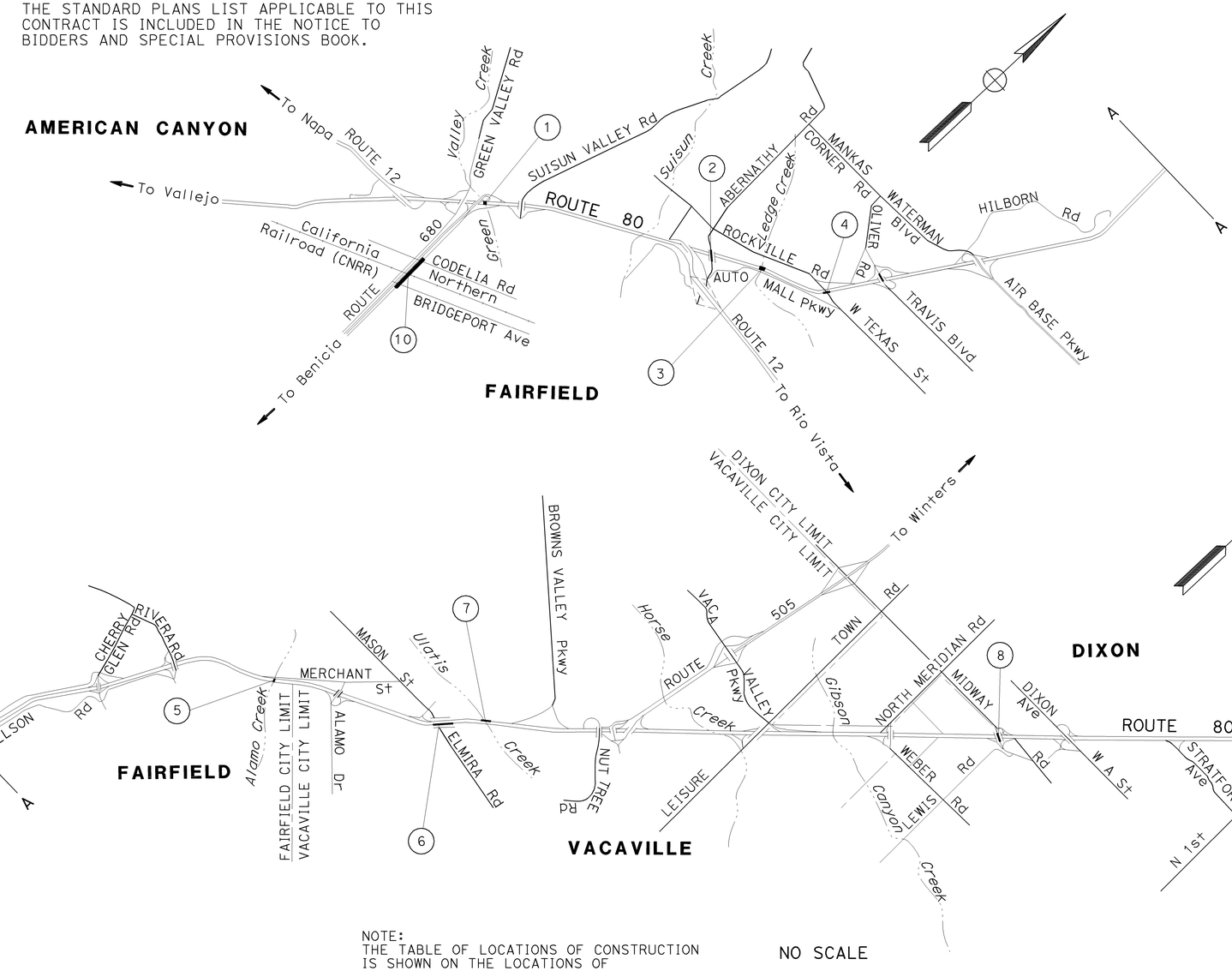

LOCATION MAP

NOTE:
THE TABLE OF LOCATIONS OF CONSTRUCTION IS SHOWN ON THE LOCATIONS OF CONSTRUCTION SHEET.

NO SCALE

THE CONTRACTOR SHALL POSSESS THE CLASS (OR CLASSES) OF LICENSE AS SPECIFIED IN THE "NOTICE TO BIDDERS."

PROJECT MANAGER: RAMSES SARGISS

DESIGN ENGINEER: CHUEN-HSIUNG CHERN

C.H. Chern — 8/04/11
PROJECT ENGINEER — DATE
REGISTERED CIVIL ENGINEER

September 6, 2011
PLANS APPROVAL DATE

REGISTERED PROFESSIONAL ENGINEER — Chuen-Hsiung Chern — No. 48187 — Exp. 6-30-12 — CIVIL — STATE OF CALIFORNIA

THE STATE OF CALIFORNIA OR ITS OFFICERS OR AGENTS SHALL NOT BE RESPONSIBLE FOR THE ACCURACY OR COMPLETENESS OF SCANNED COPIES OF THIS PLAN SHEET.

CONTRACT No.	04-2E2604
PROJECT ID	0400020051

LAST REVISION: DATE PLOTTED => 17-FEB-2012
06-08-11 TIME PLOTTED => 07:41

BORDER LAST REVISED 7/2/2010 | CALTRANS WEB SITE IS: HTTP//WWW.DOT.CA.GOV/ | RELATIVE BORDER SCALE IS IN INCHES 0 1 2 3 | USERNAME => s135695 DGN FILE => 0400020051ab001.dgn | UNIT 0976 | PROJECT NUMBER & PHASE 04000200511

Dist	COUNTY	ROUTE	POST MILES TOTAL PROJECT	SHEET No.	TOTAL SHEETS
04	Sol	80,680	Var	2	27

C.H. Chern 8-4-11
REGISTERED CIVIL ENGINEER DATE

9-6-11
PLANS APPROVAL DATE

REGISTERED PROFESSIONAL ENGINEER
Chuen-Hsiung Chern
No. 48187
Exp. 6-30-12
CIVIL
STATE OF CALIFORNIA

THE STATE OF CALIFORNIA OR ITS OFFICERS OR AGENTS SHALL NOT BE RESPONSIBLE FOR THE ACCURACY OR COMPLETENESS OF SCANNED COPIES OF THIS PLAN SHEET.

LOCATIONS OF CONSTRUCTION

LOCATION	COUNTY	ROUTE	PM	BRIDGE No.	BRIDGE NAME
1	Sol	80	12.91	23-0004	GREEN VALLEY CREEK
2	Sol	80	16.17	23-0141	ABERNATHY Rd OC
3	Sol	80	17.02	23-0008R	LEDGEWOOD CREEK
4	Sol	80	17.20	23-0106R	WEST TEXAS St UC
5	Sol	80	R25.03	23-0010	ALAMO CREEK
6	Sol	80	R26.46	23-0051R	MASON St UC
7	Sol	80	R26.61	23-0052L	ULATIS CREEK
8	Sol	80	32.62	23-0148	MIDWAY Rd OC
9	Sol	80	42.36	23-0054R	SOUTH FORK PUTAH CREEK
10	Sol	680	12.63	23-0142R	CORDELIA OH

CALCULATED-DESIGNED BY: CHUEN-HSIUNG CHERN
CHECKED BY: NGOC TRAN
REVISED BY
DATE REVISED
FUNCTIONAL SUPERVISOR: RAMSES SARGISS

STATE OF CALIFORNIA - DEPARTMENT OF TRANSPORTATION
Caltrans® DESIGN

LOCATIONS OF CONSTRUCTION

LC-1

LAST REVISION | DATE PLOTTED => 17-FEB-2012
06-10-11 | TIME PLOTTED => 07:41

Dist	COUNTY	ROUTE	POST MILES TOTAL PROJECT	SHEET No.	TOTAL SHEETS
04	Sol	80,680	Var	3	27

Florante P. Perez 8-4-11
REGISTERED CIVIL ENGINEER DATE

9-6-11
PLANS APPROVAL DATE

REGISTERED PROFESSIONAL ENGINEER — Florante P. Perez — No. 41030 — Exp. 3-31-13 — CIVIL — STATE OF CALIFORNIA

THE STATE OF CALIFORNIA OR ITS OFFICERS OR AGENTS SHALL NOT BE RESPONSIBLE FOR THE ACCURACY OR COMPLETENESS OF SCANNED COPIES OF THIS PLAN SHEET.

LEGEND:

[No.] CONSTRUCTION AREA SIGN NUMBER

→ DIRECTION OF TRAFFIC

X RAMP CLOSURE

NOTES:

1. EXACT LOCATION AND POSITION OF CONSTRUCTION AREA SIGNS TO BE DETERMINED BY THE ENGINEER.
2. THESE PLANS ARE TO BE USED IN ADDITION TO DETAILS FOR RAMP CLOSURE MISCELLANEOUS T14 OF STANDARD PLANS DATED MAY 2006.

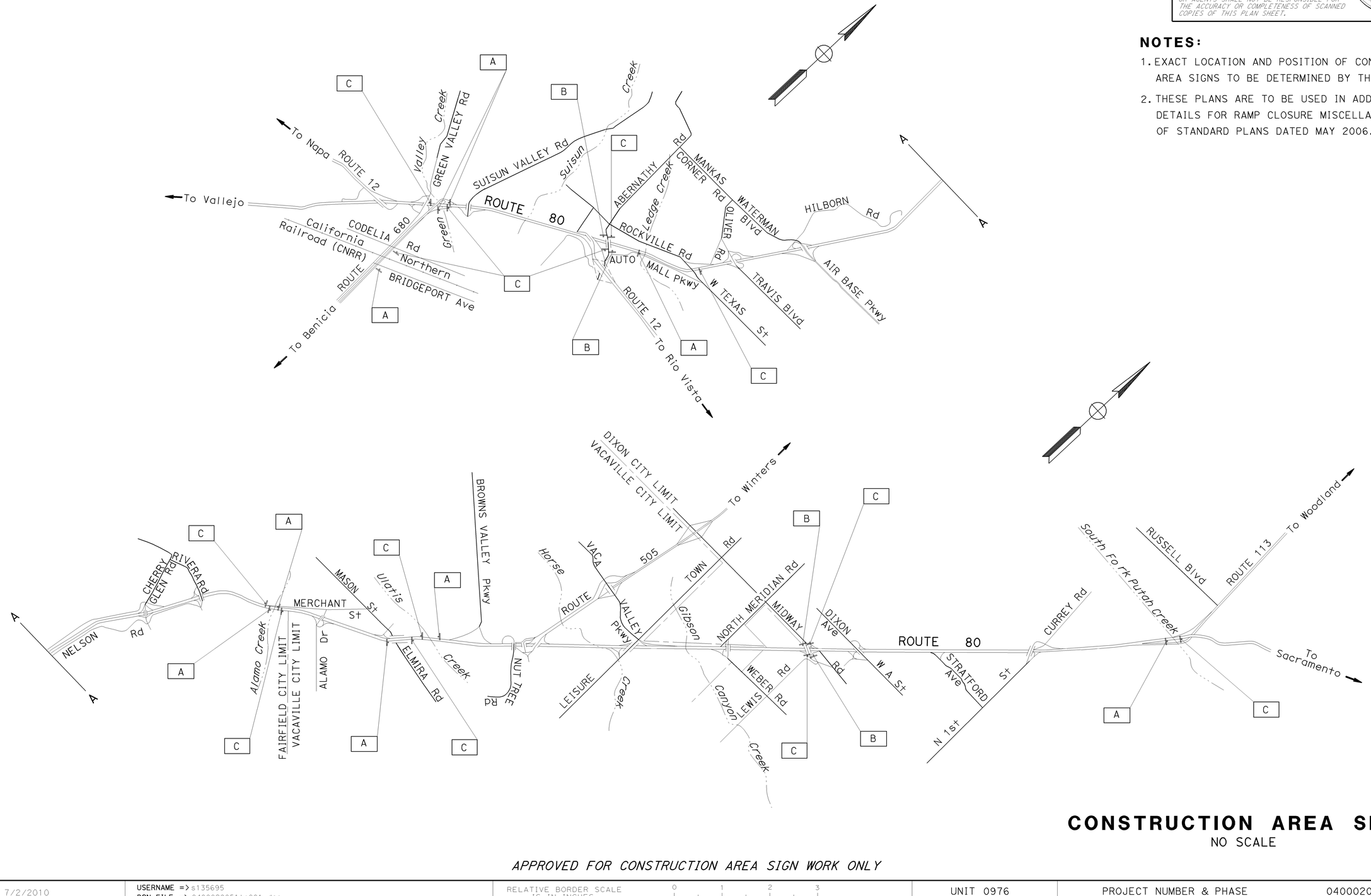

CONSTRUCTION AREA SIGNS

NO SCALE

APPROVED FOR CONSTRUCTION AREA SIGN WORK ONLY

CS-1

STATE OF CALIFORNIA - DEPARTMENT OF TRANSPORTATION
Caltrans®
TRAFFIC

FUNCTIONAL SUPERVISOR: LOURDES DAVID

CALCULATED-DESIGNED BY: FLORANTE PEREZ
CHECKED BY: CLAUDIA FANG

REVISED BY | DATE REVISED

LAST REVISION | DATE PLOTTED => 17-FEB-2012
06-07-11 | TIME PLOTTED => 07:42

BORDER LAST REVISED 7/2/2010

USERNAME => s135695
DGN FILE => 04000200511a001.dgn

RELATIVE BORDER SCALE IS IN INCHES 0 1 2 3

UNIT 0976

PROJECT NUMBER & PHASE 04000200511

Dist	COUNTY	ROUTE	POST MILES TOTAL PROJECT	SHEET No.	TOTAL SHEETS
04	Sol	80,680	Var	4	27

REGISTERED CIVIL ENGINEER 8-4-11 DATE

9-6-11
PLANS APPROVAL DATE

REGISTERED PROFESSIONAL ENGINEER Florante P. Perez No. 41030 Exp. 3-31-13 CIVIL STATE OF CALIFORNIA

THE STATE OF CALIFORNIA OR ITS OFFICERS OR AGENTS SHALL NOT BE RESPONSIBLE FOR THE ACCURACY OR COMPLETENESS OF SCANNED COPIES OF THIS PLAN SHEET.

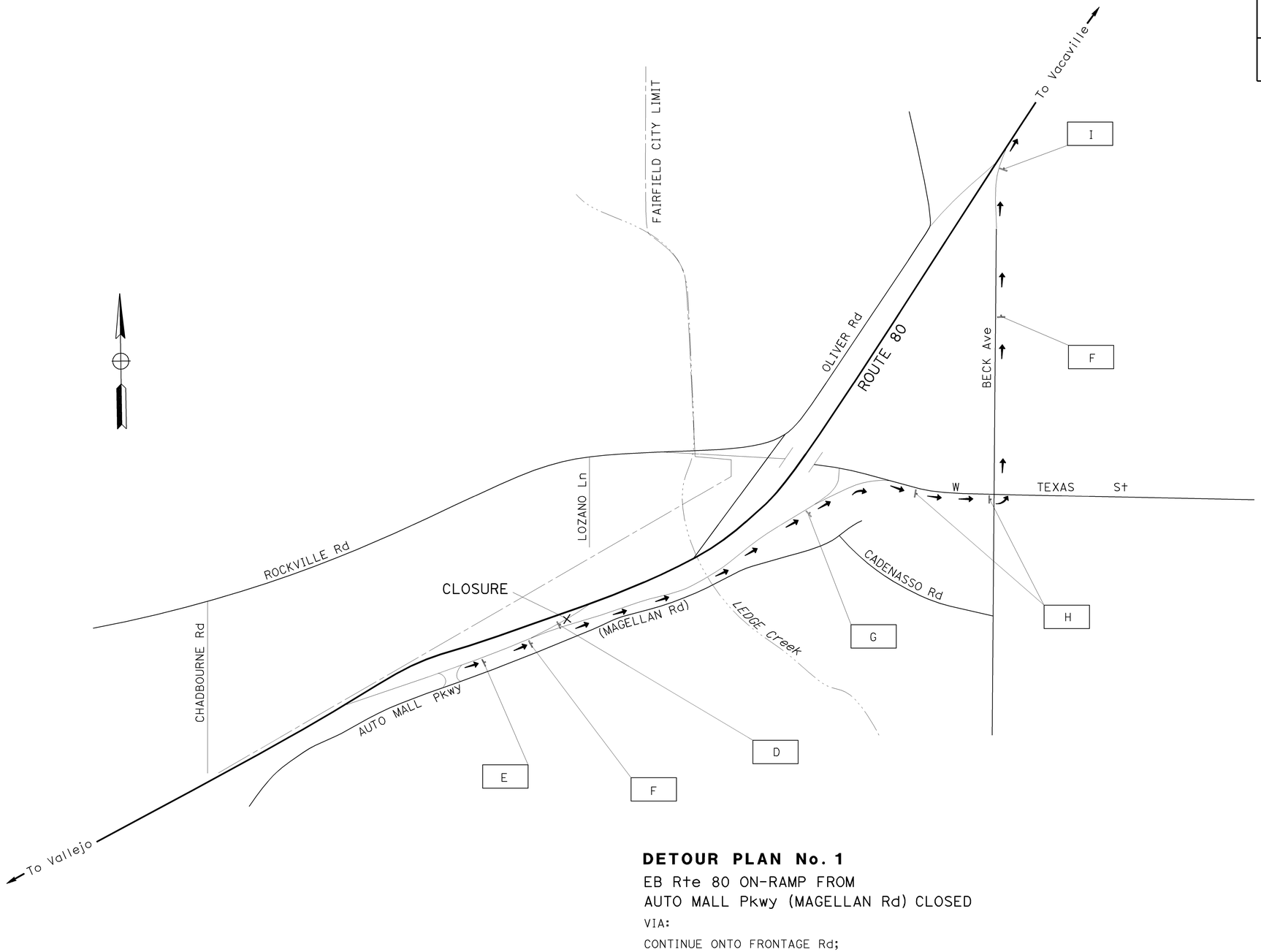

DETOUR PLAN No. 1

EB Rte 80 ON-RAMP FROM
AUTO MALL Pkwy (MAGELLAN Rd) CLOSED

VIA:

CONTINUE ONTO FRONTAGE Rd;
RIGHT WEST TEXAS St;
LEFT BECK Ave;
EB Rte 80 ON-RAMP FROM BECK Ave.

CONSTRUCTION AREA SIGNS

NO SCALE

APPROVED FOR CONSTRUCTION AREA SIGN WORK ONLY

FOR NOTES, ABBREVIATIONS AND LEGEND, SEE SHEET CS-1

CS-2

STATE OF CALIFORNIA - DEPARTMENT OF TRANSPORTATION
Caltrans
TRAFFIC

FUNCTIONAL SUPERVISOR: LOURDES DAVID
CALCULATED-DESIGNED BY: CLAUDIA FANG
CHECKED BY: FLORANTE PEREZ
REVISED BY
DATE REVISED

LAST REVISION 06-07-11
DATE PLOTTED => 17-FEB-2012
TIME PLOTTED => 07:42

Dist	COUNTY	ROUTE	POST MILES TOTAL PROJECT	SHEET No.	TOTAL SHEETS
04	Sol	80,680	Var	5	27

Florante P. Perez 8-4-11
REGISTERED CIVIL ENGINEER DATE

9-6-11
PLANS APPROVAL DATE

THE STATE OF CALIFORNIA OR ITS OFFICERS OR AGENTS SHALL NOT BE RESPONSIBLE FOR THE ACCURACY OR COMPLETENESS OF SCANNED COPIES OF THIS PLAN SHEET.

REGISTERED PROFESSIONAL ENGINEER
Florante P. Perez
No. 41030
Exp. 3-31-13
CIVIL
STATE OF CALIFORNIA

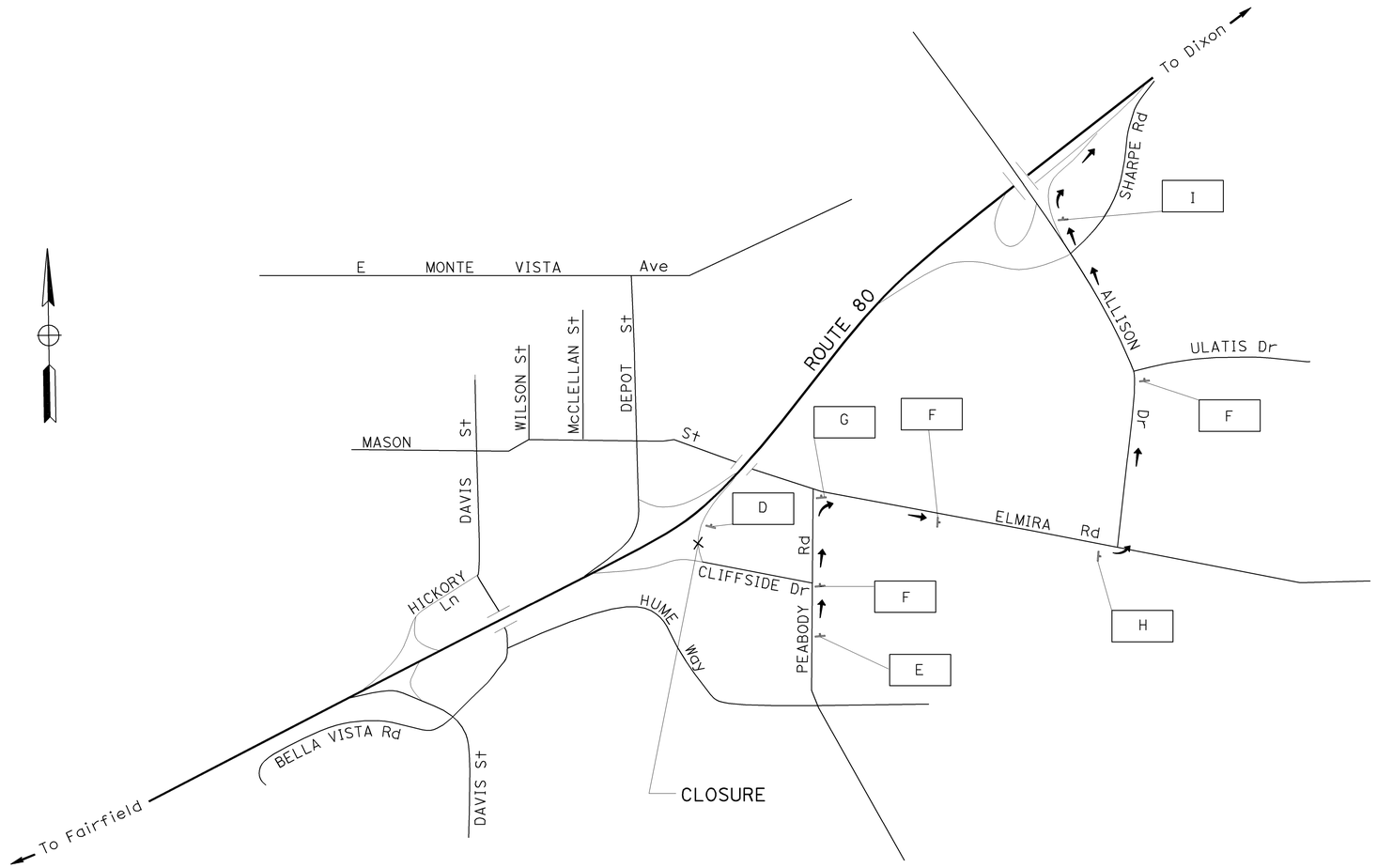

DETOUR PLAN No. 2

EB Rte 80 ON-RAMP FROM
CLIFFSIDE Dr CLOSED

VIA:
CONTINUE ON PEABODY Rd;
RIGHT ELMIRA Rd;
LEFT ALLISON Dr;
RIGHT ONTO EB Rte 80 ON-RAMP FROM ALLISON Dr.

APPROVED FOR CONSTRUCTION AREA SIGN WORK ONLY

FOR NOTES, ABBREVIATIONS AND LEGEND, SEE SHEET CS-1

CONSTRUCTION AREA SIGNS

NO SCALE

CS-3

STATE OF CALIFORNIA - DEPARTMENT OF TRANSPORTATION
TRAFFIC
Caltrans

FUNCTIONAL SUPERVISOR: LOURDES DAVID
CALCULATED-DESIGNED BY: CLAUDIA FANG
CHECKED BY: FLORANTE PEREZ
REVISED BY
DATE REVISED

LAST REVISION DATE PLOTTED => 17-FEB-2012
TIME PLOTTED => 07:43
06-07-11

BORDER LAST REVISED 7/2/2010
USERNAME => s135695
DGN FILE => 04000200511a003.dgn
RELATIVE BORDER SCALE IS IN INCHES 0 1 2 3
UNIT 0976
PROJECT NUMBER & PHASE 04000200511

Dist	COUNTY	ROUTE	POST MILES TOTAL PROJECT	SHEET No.	TOTAL SHEETS
04	Sol	80,680	Var	6	27

Florante P. Perez 8-4-11
REGISTERED CIVIL ENGINEER DATE

9-6-11
PLANS APPROVAL DATE

REGISTERED PROFESSIONAL ENGINEER — Florante P. Perez — No. 41030 — Exp. 3-31-13 — CIVIL — STATE OF CALIFORNIA

THE STATE OF CALIFORNIA OR ITS OFFICERS OR AGENTS SHALL NOT BE RESPONSIBLE FOR THE ACCURACY OR COMPLETENESS OF SCANNED COPIES OF THIS PLAN SHEET.

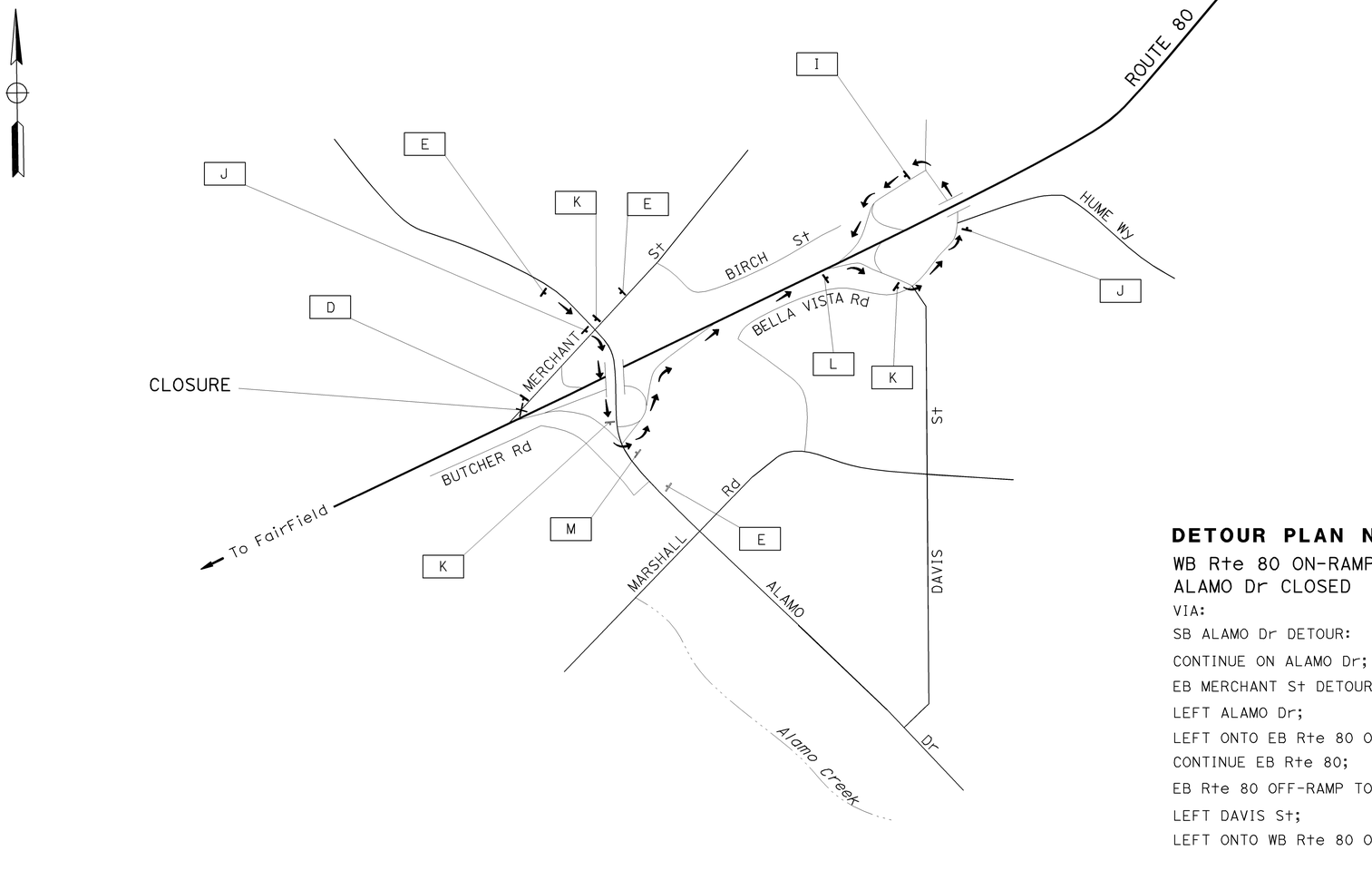

DETOUR PLAN No. 3

WB Rte 80 ON-RAMP FROM ALAMO Dr CLOSED

VIA:

SB ALAMO Dr DETOUR:

CONTINUE ON ALAMO Dr;

EB MERCHANT St DETOUR:

LEFT ALAMO Dr;

LEFT ONTO EB Rte 80 ON-RAMP FROM ALAMO Dr;

CONTINUE EB Rte 80;

EB Rte 80 OFF-RAMP TO DAVIS St;

LEFT DAVIS St;

LEFT ONTO WB Rte 80 ON-RAMP FROM DAVIS St.

CONSTRUCTION AREA SIGNS

NO SCALE

CS-4

APPROVED FOR CONSTRUCTION AREA SIGN WORK ONLY

FOR NOTES, ABBREVIATIONS AND LEGEND, SEE SHEET CS-1

STATE OF CALIFORNIA - DEPARTMENT OF TRANSPORTATION
TRAFFIC
Caltrans

FUNCTIONAL SUPERVISOR: LOURDES DAVID
CALCULATED-DESIGNED BY: FLORANTE PEREZ
CHECKED BY: CLAUDIA FANG
REVISED BY / DATE REVISED

LAST REVISION 04-07-11
DATE PLOTTED => 17-FEB-2012
TIME PLOTTED => 07:43

BORDER LAST REVISED 7/2/2010
USERNAME => s135695
DGN FILE => 04000200511a004.dgn
RELATIVE BORDER SCALE IS IN INCHES 0 1 2 3
UNIT 0976
PROJECT NUMBER & PHASE 04000200511

Dist	COUNTY	ROUTE	POST MILES TOTAL PROJECT	SHEET No.	TOTAL SHEETS
04	Sol	80,680	Var	7	27

REGISTERED CIVIL ENGINEER 8-4-11 DATE

9-6-11
PLANS APPROVAL DATE

REGISTERED PROFESSIONAL ENGINEER Florante P. Perez No. 41030 Exp. 3-31-13 CIVIL STATE OF CALIFORNIA

THE STATE OF CALIFORNIA OR ITS OFFICERS OR AGENTS SHALL NOT BE RESPONSIBLE FOR THE ACCURACY OR COMPLETENESS OF SCANNED COPIES OF THIS PLAN SHEET.

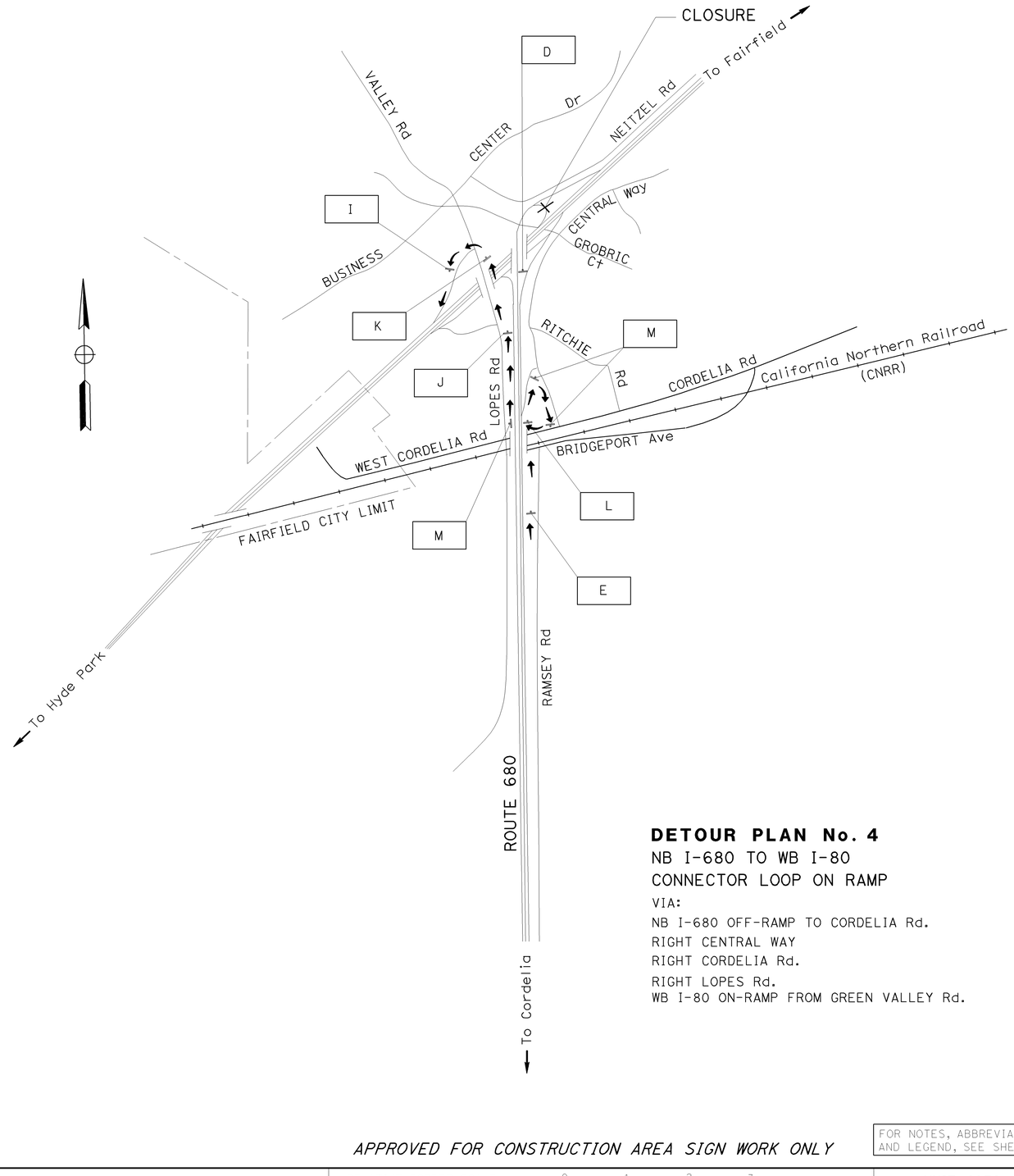

DETOUR PLAN No. 4
NB I-680 TO WB I-80
CONNECTOR LOOP ON RAMP
VIA:
NB I-680 OFF-RAMP TO CORDELIA Rd.
RIGHT CENTRAL WAY
RIGHT CORDELIA Rd.
RIGHT LOPES Rd.
WB I-80 ON-RAMP FROM GREEN VALLEY Rd.

CONSTRUCTION AREA SIGNS

NO SCALE

APPROVED FOR CONSTRUCTION AREA SIGN WORK ONLY

FOR NOTES, ABBREVIATIONS AND LEGEND, SEE SHEET CS-1

CS-5

STATE OF CALIFORNIA - DEPARTMENT OF TRANSPORTATION
Caltrans
TRAFFIC

FUNCTIONAL SUPERVISOR: LOURDES DAVID
CALCULATED-DESIGNED BY: CLAUDIA FANG
CHECKED BY: FLORANTE PEREZ
REVISED BY
DATE REVISED

LAST REVISION 04-07-11
DATE PLOTTED => 17-FEB-2012
TIME PLOTTED => 07:43

Dist	COUNTY	ROUTE	POST MILES TOTAL PROJECT	SHEET No.	TOTAL SHEETS
04	Sol	80,680	Var	8	27

Florante P. Perez 8-4-11
REGISTERED CIVIL ENGINEER DATE

9-6-11
PLANS APPROVAL DATE

REGISTERED PROFESSIONAL ENGINEER — Florante P. Perez — No. 41030 — Exp. 3-31-13 — CIVIL — STATE OF CALIFORNIA

THE STATE OF CALIFORNIA OR ITS OFFICERS OR AGENTS SHALL NOT BE RESPONSIBLE FOR THE ACCURACY OR COMPLETENESS OF SCANNED COPIES OF THIS PLAN SHEET.

STATIONARY MOUNTED CONSTRUCTION AREA SIGNS

SIGN No.	SIGN CODE	SIGN MESSAGE	PANEL SIZE	No. OF POSTS & SIZE	No. OF SIGNS
A	W20-1	ROAD WORK AHEAD	60" x 60"	2 - 4" x 6"	9
B	W20-1	ROAD WORK AHEAD	48" x 48"	1 - 4" x 6"	4
C	G20-2	END ROAD WORK	36" x 18"	1 - 4" x 4"	13
D	SC6-4(CA)	RAMP CLOSED	48" x 60"	1 - 6" x 6"	4
E	W20-2	DETOUR AHEAD	48" x 48"	1 - 4" x 6"	6
F	M4-8	DETOUR	30" x 15"	1 - 6" x 6"	5
	G27-2(80)(CA)	ROUTE 80 SHIELD	24" x 24"		
	M3-2	EAST	30" x 15"		
	M6-3(↑)	STRAIGHT AHEAD ARROW	21" x 15"		
G	M4-8	DETOUR	30" x 15"	1 - 6" x 6"	2
	G27-2(80)(CA)	ROUTE 80 SHIELD	24" x 24"		
	M3-2	EAST	31" x 15"		
	M6-1(→)	RIGHT ARROW	21" x 15"		
H	M4-8	DETOUR	30" x 15"	1 - 6" x 6"	3
	G27-2(80)(CA)	ROUTE 80 SHIELD	24" x 24"		
	M3-2	EAST	30" x 15"		
	M6-1(←)	LEFT ARROW	21" x 15"		
I	M4-8A	END DETOUR	24" x 18"	1 - 4" x 4"	4
J	M4-8	DETOUR	30" x 15"	1 - 6" x 6"	3
	G27-2(80)(CA)	ROUTE 80 SHIELD	24" x 24"		
	M3-4	WEST	30" x 15"		
	M6-3(↑)	STRAIGHT AHEAD ARROW	21" x 15"		
K	M4-8	DETOUR	30" x 15"	1 - 6" x 6"	4
	G27-2(80)(CA)	ROUTE 80 SHIELD	24" x 24"		
	M3-4	WEST	30" x 15"		
	M6-1(←)	LEFT ARROW	21" x 15"		
L	M4-8	DETOUR	30" x 15"	1 - 6" x 6"	2
	G27-2(80)(CA)	ROUTE 80 SHIELD	24" x 24"		
	M3-4	WEST	30" x 15"		
	M6-2(↗)	UP RIGHT ARROW	21" x 15"		
M	M4-8	DETOUR	30" x 15"	1 - 6" x 6"	4
	G27-2(80)(CA)	ROUTE 80 SHIELD	24" x 24"		
	M3-4	WEST	30" x 15"		
	M6-1(→)	RIGHT ARROW	21" x 15"		

REVISED BY | DATE REVISED

CALCULATED-DESIGNED BY: CLAUDIA FANG
CHECKED BY: FLORANTE PEREZ

FUNCTIONAL SUPERVISOR: LOURDES DAVID

STATE OF CALIFORNIA - DEPARTMENT OF TRANSPORTATION
Caltrans®
TRAFFIC

CONSTRUCTION AREA SIGNS

CS-6

LAST REVISION 06-07-11 | DATE PLOTTED => 17-FEB-2012 | TIME PLOTTED => 07:44

BORDER LAST REVISED 7/2/2010 | USERNAME => s135695 | DGN FILE => 04000200511a006.dgn | RELATIVE BORDER SCALE IS IN INCHES 0 1 2 3 | UNIT 0976 | PROJECT NUMBER & PHASE 04000200511

Dist	COUNTY	ROUTE	POST MILES TOTAL PROJECT	SHEET No.	TOTAL SHEETS
04	Sol	80,680	Var	9	27

C.H. Chern 8-4-11
REGISTERED CIVIL ENGINEER DATE

9-6-11
PLANS APPROVAL DATE

REGISTERED PROFESSIONAL ENGINEER — Chuen-Hsiung Chern — No. 48187 — Exp. 6-30-12 — CIVIL — STATE OF CALIFORNIA

THE STATE OF CALIFORNIA OR ITS OFFICERS OR AGENTS SHALL NOT BE RESPONSIBLE FOR THE ACCURACY OR COMPLETENESS OF SCANNED COPIES OF THIS PLAN SHEET.

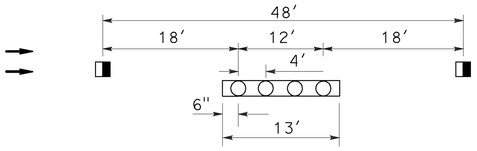

DETAIL 13M
PAVEMENT DELINEATION DETAIL
(NO SCALE)

LEGEND:

- TYPE A WHITE NON-REFLECTIVE MARKER
- TYPE G ONE-WAY CLEAR RETROREFLECTIVE MARKER
- DIRECTION OF TRAVEL
- 4" WHITE

NOTES:

1. INSTALL 4" WHITE STRIPE AFTER INSTALLATION OF PAVEMENT MARKER.
2. ALL EXISTING PAVEMENT DELINEATION SHALL BE REMOVED AND REPLACED AT THE SAME LOCATION AS EXISTING.

TRAFFIC STRIPES, PAVEMENT MARKING AND PAVEMENT MARKERS

LOCATION	BRIDGE NAME	BRIDGE No.	DETAIL No.	THERMOPLASTIC TRAFFIC STRIPE				PAVEMENT MARKER			REMOVE		
				4" WHITE	4" YELLOW	4" WHITE (BROKEN 35-13)	4" WHITE (BROKEN 17-7)	NONREFLECTIVE TYPE A	REFLECTIVE TYPE G	REFLECTIVE TYPE H	THERMOPLASTIC TRAFFIC STRIPE (WHITE)	THERMOPLASTIC TRAFFIC STRIPE (YELLOW)	PAVEMENT MARKER
				LF				EA			LF		EA
1	GREEN VALLEY CREEK	23-0004	25		160					6		160	6
			13M			640		64	24		208		88
			27B	160							160		
			8				55				21		
4	WEST TEXAS STREET UC	23-0106R	25		200					5		200	5
			13M			800		64	20		208		84
			27B	200							200		
5	ALAMO CREEK	23-0010	25		146					4		146	4
			13M			438		48	12		156		60
			27B	146							146		
6	MASON STREET UC	23-0051R	25		217					5		217	5
			13M			651		48	15		156		63
			27B	217							217		
7	ULATIS CREEK	23-0051R	25		132					3		132	3
			13M			396		36	9		117		45
			27B	132							132		
10	CORDELIA OH	23-0142R	25		60					2		60	2
			13M			60		8	2		13		10
			27B	60							60		
		SUBTOTAL		915	915	2985	55	268	82	25	1794	915	375
		TOTAL		1830		2985	55	268	107		1794	915	375

PAVEMENT DELINEATION QUANTITIES

PDQ-1

CHUEN-HSIUNG CHERN — CALCULATED-DESIGNED BY
NGOC TRAN — CHECKED BY
RAMSES SARGISS — FUNCTIONAL SUPERVISOR
REVISED BY — DATE REVISED

STATE OF CALIFORNIA - DEPARTMENT OF TRANSPORTATION
DESIGN
Caltrans

LAST REVISION 06-07-11
DATE PLOTTED => 17-FEB-2012
TIME PLOTTED => 07:44

BORDER LAST REVISED 7/2/2010
USERNAME => s135695
DGN FILE => 0400020051nc001.dgn
RELATIVE BORDER SCALE IS IN INCHES 0 1 2 3
UNIT 0976
PROJECT NUMBER & PHASE 04000200511

DIST	COUNTY	ROUTE	POST MILES TOTAL PROJECT	SHEET NO.	TOTAL SHEETS
04	Sol	80.680	var	10	27

9-6-11
REGISTERED CIVIL ENGINEER

Efthymios Delis
No. C51434
Exp. 6-30-08
CIVIL
REGISTERED PROFESSIONAL ENGINEER
STATE OF CALIFORNIA

October 5, 2007
PLANS APPROVAL DATE

The State of California or its officers or agents shall not be responsible for the accuracy or completeness of electronic copies of this plan sheet.

To accompany plans dated 9-6-11

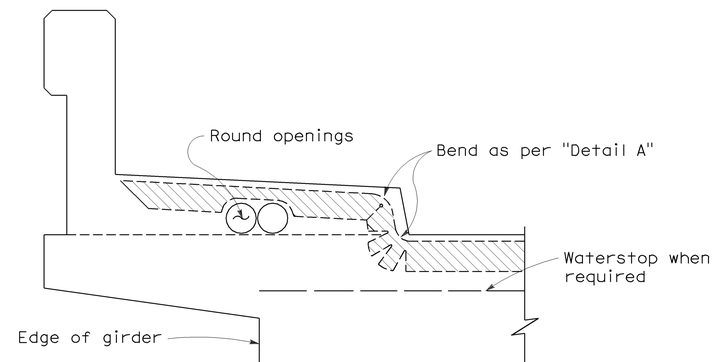

NOTE:

Type "B" seal shown. Type "A" seals to comform to the general path of seal shown, cuts for bending not required. Bend Type "A" seals 3" up into curb or barrier rail on only the low end of the seal.

CONCRETE BARRIER AND SIDEWALK

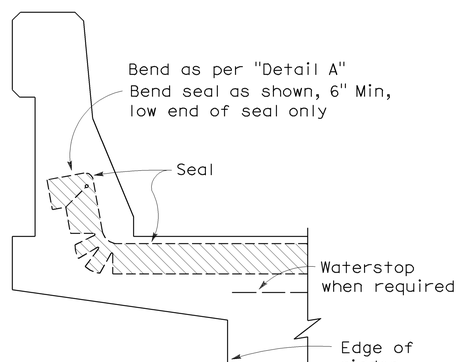

CONCRETE BARRIER

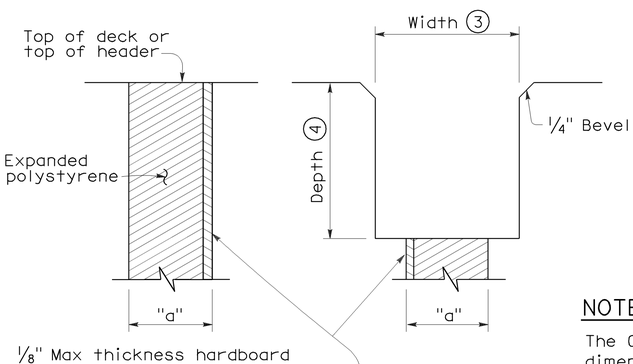

FORMING DETAIL

SAWCUT DETAIL

NOTE:

The Contractor shall verify all controlling field dimensions before ordering or fabricatiing any material.

JOINT SEALS DETAILS

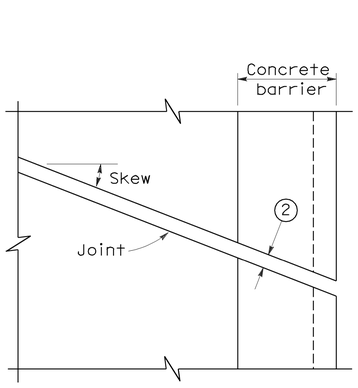

PLAN OF JOINT (SKEW ≤ 20°)

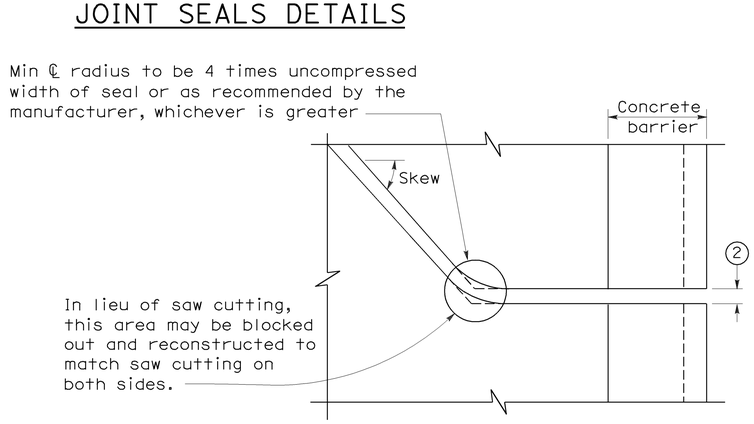

PLAN OF JOINT (SKEW > 20°)

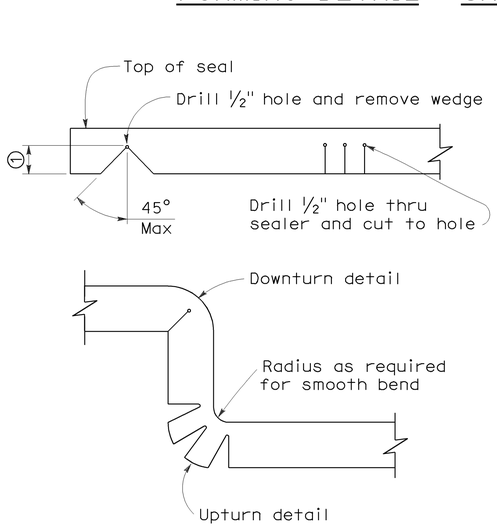

DETAIL A

NOTES:

1. Make smooth cuts from the bottom of seal to 1½" clear of top leaving at least one complete cell between the top of the cut and top of the seal. When necessary cut back of seal to clear conduit and round openings.
2. Opening in barrier to match width of sawn deck joint.
3. Sawcut groove widths shall be as ordered by the Engineer.
4. Depth of sawcut: Type A - Depth to be 2" minimum.
   Type B - Depth to be equal to or greater than the depth of seal measured along the contact surface, when compressed to minimum width position (W_2) plus dimensions shown.
5. MR (movement rating) as shown on other plan sheets.
6. Other depths must be approved by the Engineer.

DIMENSIONS "a" OF JOINT REQUIRED

Movement Rating (MR) (5)	Bridge Type	"a" Dimension Deck Concrete Placed		
		Winter	Fall-Spring	Summer
2"	All except CIP/PS	1½"	1¼"	¾"
	CIP/PS	1¼"	1"	½"
1½"	All except CIP/PS	1¼"	1"	½"
	CIP/PS	1"	¾"	½"
1"	All except CIP/PS	1"	¾"	½"
	CIP/PS	¾"	½"	½"
½"	All except CIP/PS	¾"	¾"	½"
	CIP/PS	½"	½"	½"

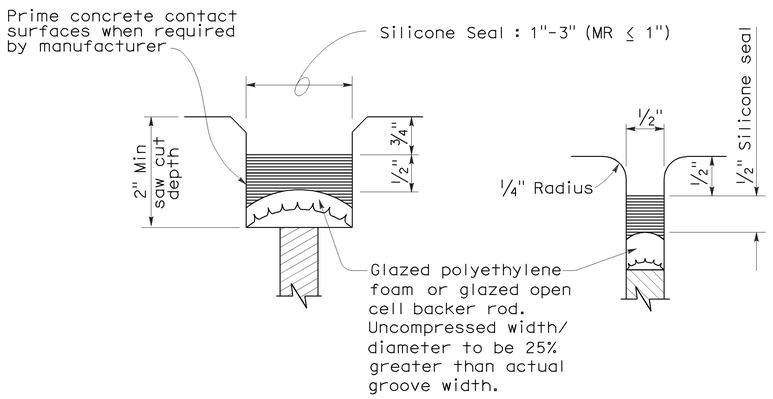

TYPE A SEAL

Movement rating : Silicone = 1" Max

TYPE AL SEAL

Longitudinal joints only

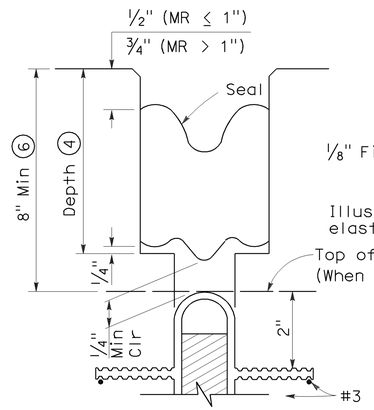

TYPE B JOINT SEAL IN MINIMUM WIDTH POSITION (W_2)

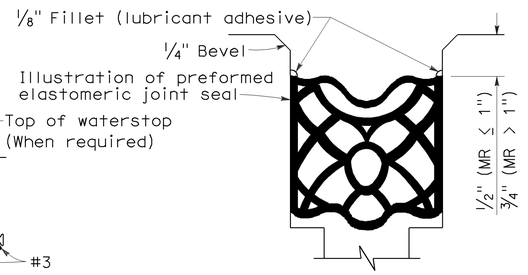

TYPE B SEAL

Movement Rating ≤ 2"

STATE OF CALIFORNIA
DEPARTMENT OF TRANSPORTATION

JOINT SEALS (MAXIMUM MOVEMENT RATING = 2")

NO SCALE

RSP B6-21 DATED OCTOBER 5, 2007 SUPERSEDES STANDARD PLAN B6-21 DATED MAY 1, 2006 - PAGE 258 OF THE STANDARD PLANS BOOK DATED MAY 2006.

REVISED STANDARD PLAN RSP B6-21

2006 REVISED STANDARD PLAN RSP B6-21

5-8-07

DIST	COUNTY	ROUTE	POST MILES TOTAL PROJECT	SHEET NO.	TOTAL SHEETS
04	Sol	80.680	var	11	27

Randell D. Hiatt 9-6-11
REGISTERED CIVIL ENGINEER

June 6, 2008
PLANS APPROVAL DATE

REGISTERED PROFESSIONAL ENGINEER — Randell D. Hiatt — No. C50200 — Exp. 6-30-09 — CIVIL — STATE OF CALIFORNIA

The State of California or its officers or agents shall not be responsible for the accuracy or completeness of electronic copies of this plan sheet.

To accompany plans dated 9-6-11

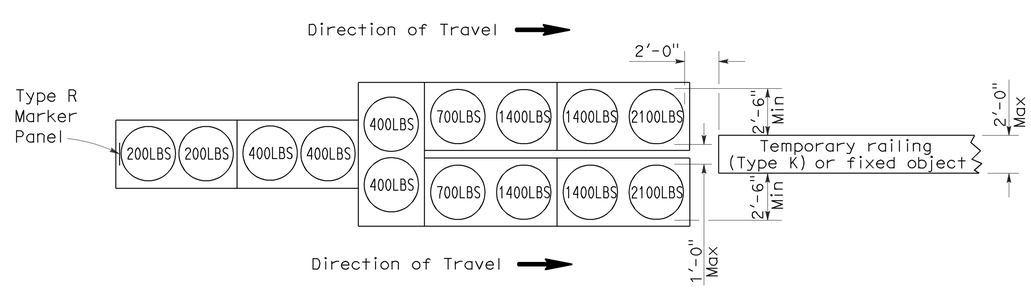

ARRAY 'TU14'

Approach speed 45 mph or more

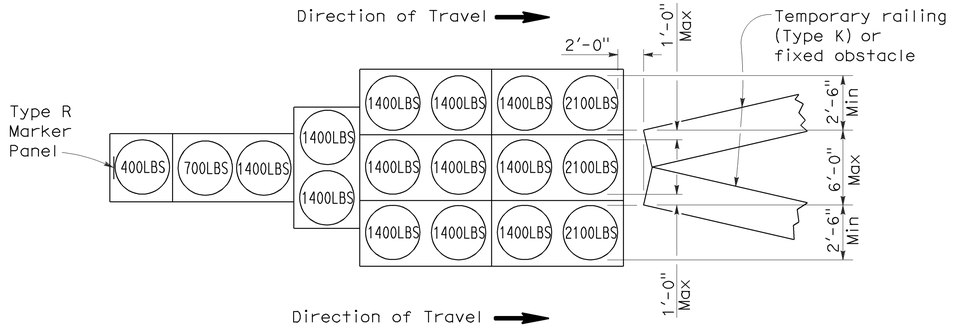

ARRAY 'TU17'

Approach speed less than 45 mph

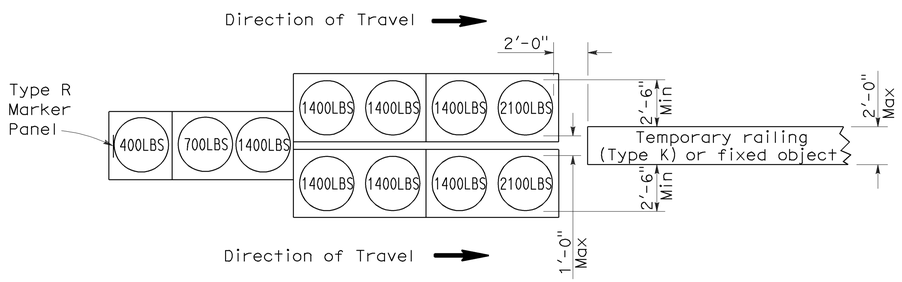

ARRAY 'TU11'

Approach speed less than 45 mph

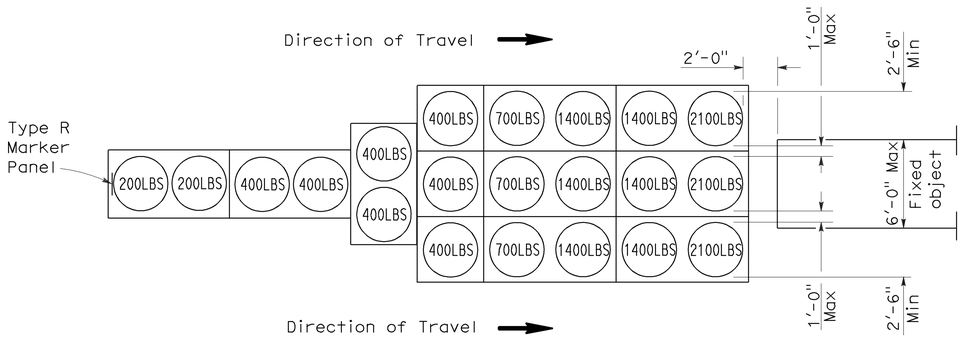

ARRAY 'TU21'

Approach speed 45 mph or more

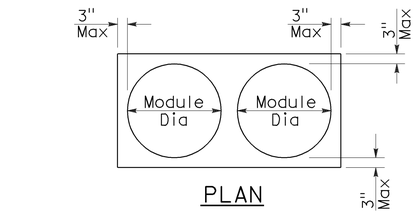

PLAN

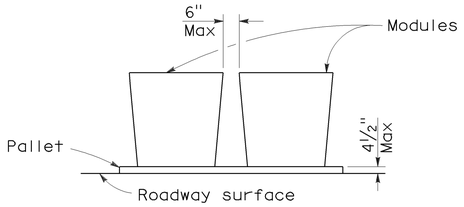

ELEVATION

CRASH CUSHION PALLET DETAIL

See Note 7

NOTES:

1. (XXX) Indicates sand filled module location and weight of sand in pounds for each module. Module spacing is based on the greater diameter of the module.
2. All sand weights are nominal.
3. Temporary crash cushion arrays shall not encroach on the traveled way.
4. Place the top of Type R marker panel 1" below the module lid.
5. Refer to Standard Plan A73B for marker details.
6. Approach speeds indicated conform to NCHRP 350 Report criteria.
7. Use of pallets is optional.

STATE OF CALIFORNIA
DEPARTMENT OF TRANSPORTATION

TEMPORARY CRASH CUSHION, SAND FILLED (UNIDIRECTIONAL)

NO SCALE

RSP T1A DATED JUNE 6, 2008 SUPERSEDES STANDARD PLAN T1A
DATED MAY 1, 2006 - PAGE 211 OF THE STANDARD PLANS BOOK DATED MAY 2006.

REVISED STANDARD PLAN RSP T1A

2006 REVISED STANDARD PLAN RSP T1A

5-15-08

DIST	COUNTY	ROUTE	POST MILES TOTAL PROJECT	SHEET NO.	TOTAL SHEETS
04	Sol	80.680	var	12	27

Randell D. Hiatt 9-6-11
REGISTERED CIVIL ENGINEER

June 6, 2008
PLANS APPROVAL DATE

REGISTERED PROFESSIONAL ENGINEER — Randell D. Hiatt — No. C50200 — Exp. 6-30-09 — CIVIL — STATE OF CALIFORNIA

The State of California or its officers or agents shall not be responsible for the accuracy or completeness of electronic copies of this plan sheet.

To accompany plans dated 9-6-11

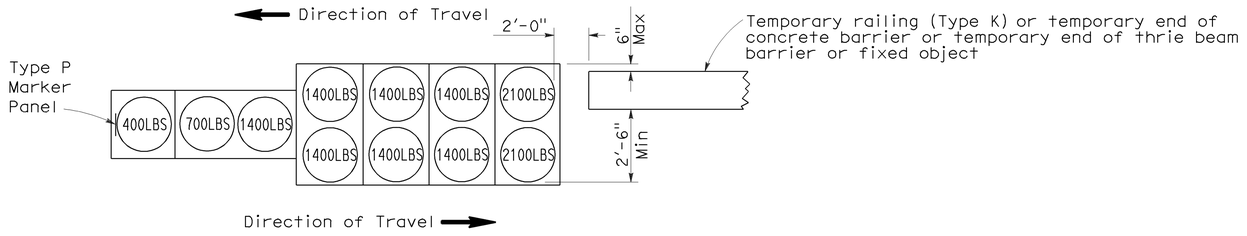

ARRAY 'TB11'

Approach speed less than 45 mph

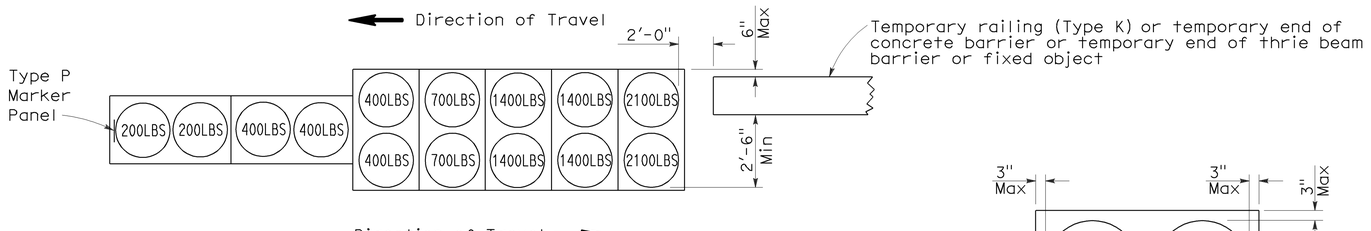

ARRAY 'TB14'

Approach speed 45 mph or more

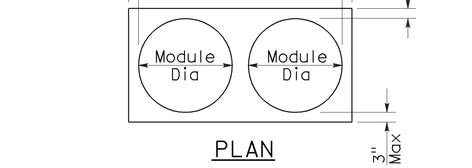

PLAN

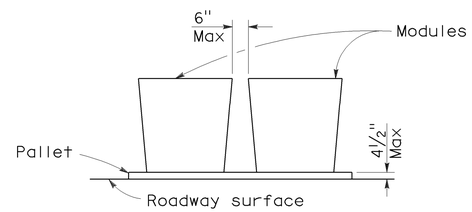

ELEVATION

CRASH CUSHION PALLET DETAIL

See Note 7

NOTES:

1. (XXX) Indicates sand filled module location and weight of sand in pounds for each module. Module spacing is based on the greater diameter of the module.
2. All sand weights are nominal.
3. Temporary crash cushion arrays shall not encroach on the traveled way.
4. Place the Type P marker panel so that the bottom of the panel rests upon the pallet.
5. Refer to Standard Plan A73B for marker details.
6. Approach speeds indicated conform to NCHRP 350 Report criteria.
7. Use of pallets is optional.

STATE OF CALIFORNIA
DEPARTMENT OF TRANSPORTATION

TEMPORARY CRASH CUSHION, SAND FILLED (BIDIRECTIONAL)

NO SCALE

RSP T1B DATED JUNE 6, 2008 SUPERSEDES STANDARD PLAN T1B
DATED MAY 1, 2006 - PAGE 212 OF THE STANDARD PLANS BOOK DATED MAY 2006.

REVISED STANDARD PLAN RSP T1B

2006 REVISED STANDARD PLAN RSP T1B

5-15-08

DIST	COUNTY	ROUTE	POST MILES TOTAL PROJECT	SHEET NO.	TOTAL SHEETS
04	Sol	80.680	var	13	27

Randell D. Hiatt 9-6-11
REGISTERED CIVIL ENGINEER

June 6, 2008
PLANS APPROVAL DATE

REGISTERED PROFESSIONAL ENGINEER — Randell D. Hiatt — No. C50200 — Exp. 6-30-09 — CIVIL — STATE OF CALIFORNIA

The State of California or its officers or agents shall not be responsible for the accuracy or completeness of electronic copies of this plan sheet.

To accompany plans dated 9-6-11

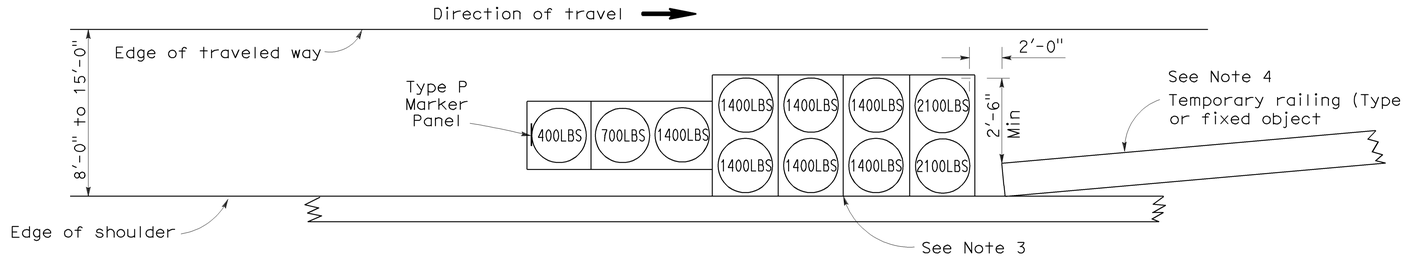

ARRAY 'TS11'

Approach speed less than 45 mph
See Note 9

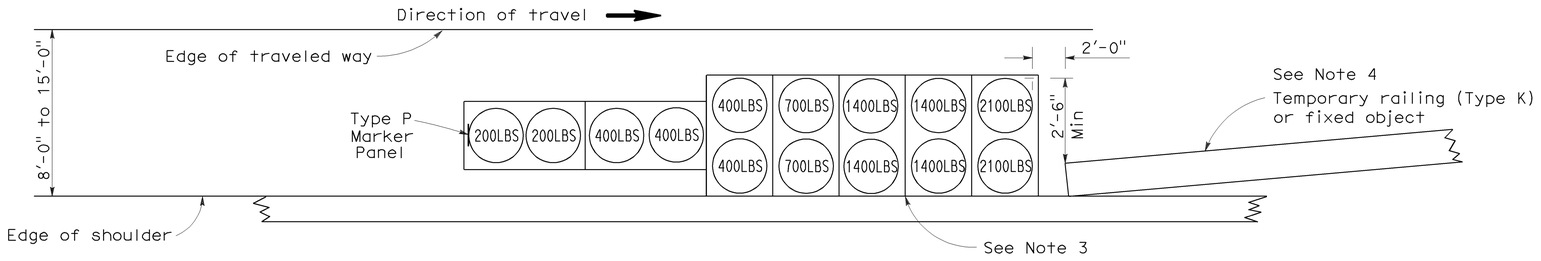

ARRAY 'TS14'

Approach speed 45 mph or more
See Note 9

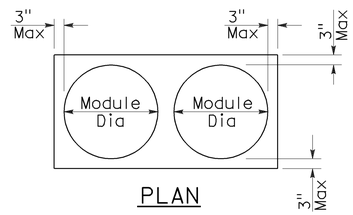

PLAN

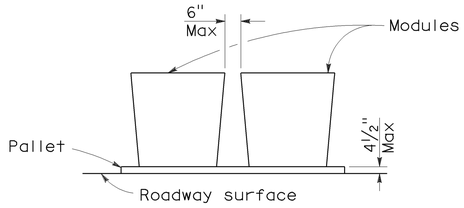

ELEVATION

CRASH CUSHION PALLET DETAIL

See Note 11

NOTES:

1. (XXX) Indicates sand filled module location and weight of sand in pounds for each module. Module spacing is based on the greater diameter of the module.
2. All sand weights are nominal.
3. The temporary crash cushion arrays shown on this plan shall be used only in locations where there will be traffic on one side of the temporary crash cushion array.
4. If the fixed object or approach end of the temporary railing is less than 15'-0" from the edge of traveled way, a temporary crash cushion is required in a construction or work zone.
5. Temporary crash cushion arrays shall not encroach on the traveled way.
6. Arrays for median shoulders shall conform to details shown on this plan for outside shoulders.
7. Place the Type P marker panel so that the bottom of the panel rests upon the pallet and faces traffic.
8. Refer to Standard Plan A73B for marker details.
9. For shoulder widths less than 8'-0", appropriate approved crash cushion protection, other than sand filled modules, shall be provided at fixed objects and at approach ends of temporary railing. The specific type of crash cushion shall be as shown on the project plans or as specified in the Special Provisions, or if not shown on the project plans or specified in the Special Provisions, shall be as approved by the Engineer.
10. Approach speeds indicated conform to NCHRP 350 Report criteria.
11. Use of pallets is optional.

STATE OF CALIFORNIA
DEPARTMENT OF TRANSPORTATION

TEMPORARY CRASH CUSHION, SAND FILLED (SHOULDER INSTALLATIONS)

NO SCALE

RSP T2 DATED JUNE 6, 2008 SUPERSEDES STANDARD PLAN T2
DATED MAY 1, 2006 - PAGE 213 OF THE STANDARD PLANS BOOK DATED MAY 2006.

REVISED STANDARD PLAN RSP T2

2006 REVISED STANDARD PLAN RSP T2

5-15-08

Dist	COUNTY	ROUTE	POST MILES TOTAL PROJECT	SHEET No.	TOTAL SHEETS
04	Sol	80.680	var	14	27

Randell D. Hiatt 9-6-11
REGISTERED CIVIL ENGINEER

May 20, 2011
PLANS APPROVAL DATE

REGISTERED PROFESSIONAL ENGINEER
Randell D. Hiatt
No. C50200
Exp. 6-30-11
CIVIL
STATE OF CALIFORNIA

The State of California or its officers or agents shall not be responsible for the accuracy or completeness of electronic copies of this plan sheet.

To accompany plans dated 9-6-11

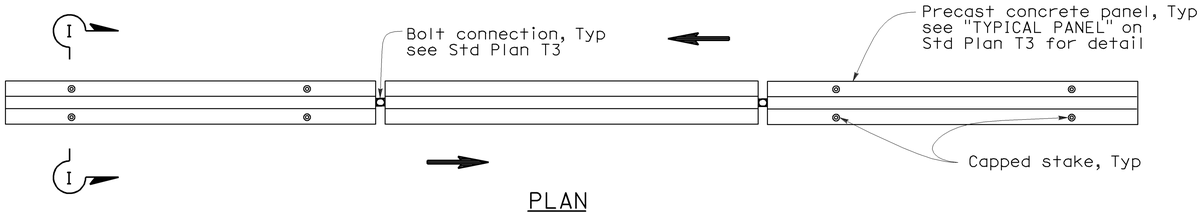

PLAN

RAILING STAKING CONFIGURATION FOR TWO-WAY TRAFFIC

See Note 1

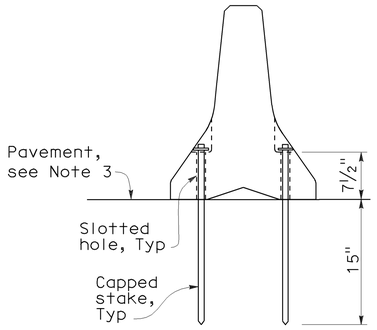

SECTION I-I

NOTES:

1. Where Type K Temporary Railing is placed as a temporary or long term barrier in two-way traffic on highways with less than 24" from the edge of traveled way, use four capped stakes per every other panel with end panels staked.
2. Where Type K Temporary Railing is placed 3" to 24" from the edge of an excavation on highways, use two capped stakes per panel along the traffic side.
3. Staked Type K Temporary Railing must be supported by at least 4" thick concrete, hot mix asphalt or existing asphalt concrete pavement.
4. The minimum yield strength for the washer must be 60,000 psi.
5. Direction of adjacent traffic indicated by ⟹.

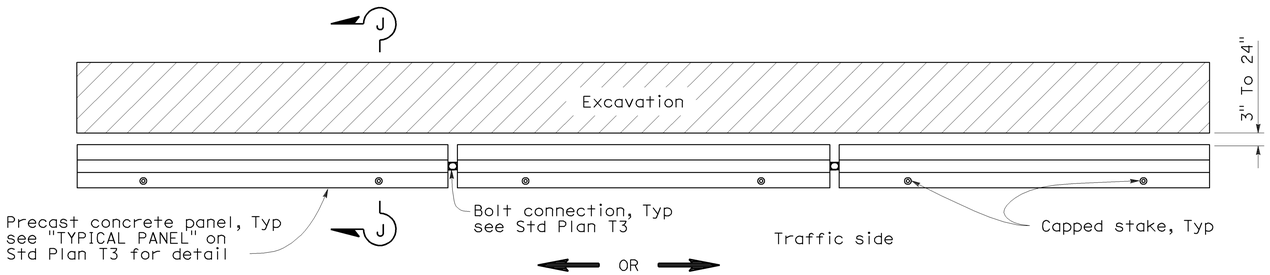

PLAN

RAILING STAKING CONFIGURATION ADJACENT TO AN EXCAVATION

See Note 2

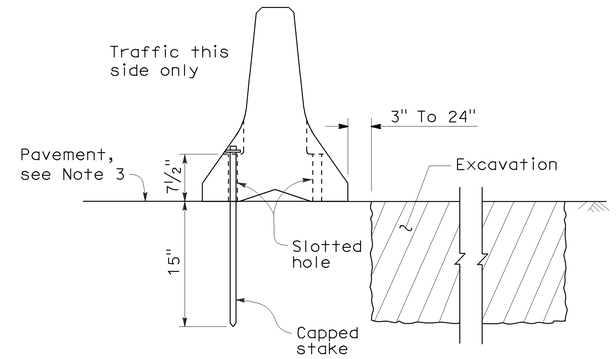

SECTION J-J

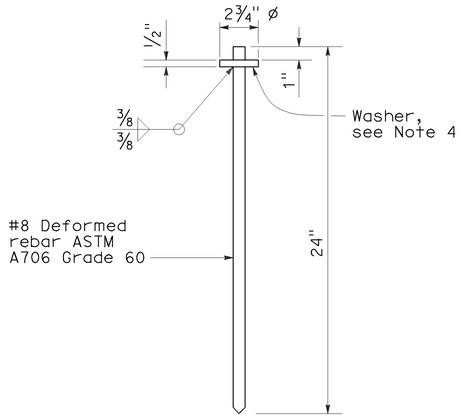

CAPPED STAKE DETAIL

STATE OF CALIFORNIA
DEPARTMENT OF TRANSPORTATION

TEMPORARY RAILING (TYPE K)

NO SCALE

NSP T3A DATED MAY 20, 2011 SUPPLEMENTS
THE STANDARD PLANS BOOK DATED MAY 2006.

NEW STANDARD PLAN NSP T3A

2006 NEW STANDARD PLAN NSP T3A

8-31-10

DIST	COUNTY	ROUTE	POST MILES TOTAL PROJECT	SHEET No.	TOTAL SHEETS
04	Sol	80, 680	Var	15	27

REGISTERED CIVIL ENGINEER — 8-10-11 DATE

PLANS APPROVAL DATE

REGISTERED PROFESSIONAL ENGINEER — LINA G. ELLIS — No. C65260 — Exp. 9-30-11 — CIVIL — STATE OF CALIFORNIA

The State of California or its officers or agents shall not be responsible for the accuracy or completeness of electronic copies of this plan sheet.

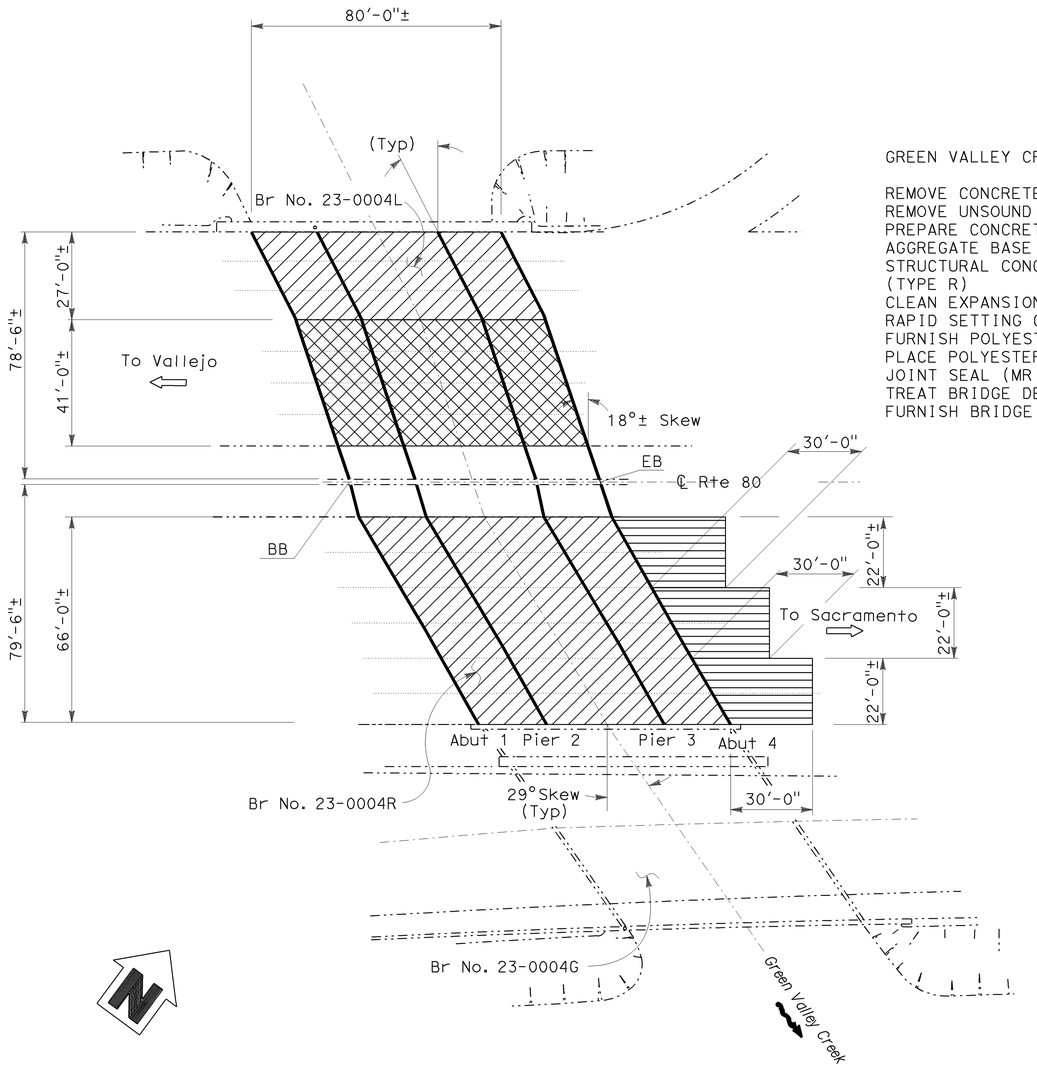

GREEN VALLEY CREEK	BRIDGE NO. 23-0004	
QUANTITIES		
REMOVE CONCRETE DECK SURFACE	3,300	SQFT
REMOVE UNSOUND CONCRETE	19	CF
PREPARE CONCRETE BRIDGE DECK SURFACE	10,740	SQFT
AGGREGATE BASE (APPROACH SLAB)	9	CY
STRUCTURAL CONCRETE, APPROACH SLAB (TYPE R)	90	CY
CLEAN EXPANSION JOINT	597	LF
RAPID SETTING CONCRETE (PATCH)	19	CF
FURNISH POLYESTER CONCRETE OVERLAY	660	CF
PLACE POLYESTER CONCRETE OVERLAY	3,300	SQFT
JOINT SEAL (MR 1/2")	673	LF
TREAT BRIDGE DECK	7,440	SQFT
FURNISH BRIDGE DECK TREATMENT MATERIAL	83	GAL

LEGEND:

- Indicates existing structure
- Indicates direction of traffic
- Indicates location of clean expansion joint and replace joint seal. Prior to replacement of joint seal, repair joint spall. See "JOINT SPALL REPAIR DETAIL" on "DECK REPAIR TABLE AND DETAILS" sheet.
- Indicates limits of remove unsound concrete and replace with rapid setting concrete (patch), prepare concrete bridge deck surface and treat deck with hich molecular weight methacrylate. See "DECK REPAIR DETAIL 2" on "DECK REPAIR TABLE AND DETAIL" sheet.
- Indicates limits of removing existing lightweight concrete overlay (2"). Prepare bridge deck surface and place 2" polyester concrete overlay. See "DECK REPAIR DETAIL 1" on "DECK REPAIR TABLE AND DETAIL" sheet.
- Indicates limits of placement of New Structure Approach, Type R (30S)
- (-) Indicates bridge location. see "Title" sheet.

INDEX TO PLANS

SHEET No.	TITLE
1	GENERAL PLAN No. 1
2	GENERAL PLAN No. 2
3	GENERAL PLAN No. 3
4	GENERAL PLAN No. 4
5	GENERAL PLAN No. 5
6	GENERAL PLAN No. 6
7	GENERAL PLAN No. 7
8	GENERAL PLAN No. 8
9	GENERAL PLAN No. 9
10	GENERAL PLAN No. 10
11	DECK REPAIR TABLE AND DETAILS
12	JOINT SEAL TABLE AND DETAILS
13	STRUCTURE APPROACH TYPE R (30S)

STANDARD PLANS DATED MAY 2006

SHEET No.	TITLE
A10A	ACRONYMS AND ABBREVIATIONS (SHEET 1 OF 2)
A10B	ACRONYMS AND ABBREVIATIONS (SHEET 2 OF 2)
RSP B6-21	JOINT SEALS (MAXIMUM MR = 2")

① GREEN VALLEY CREEK

Br No. 23-0004, Rte 80, PM 12.91
No Scale

NOTE:
THE CONTRACTOR SHALL VERIFY ALL CONTROLLING FIELD DIMENSIONS BEFORE ORDERING OR FABRICATING ANY MATERIAL.

REPLACE JOINT SEALS, STRUCTURE APPROACH, TREAT BRIDGE DECKS & BRIDGE DECK OVERLAY

	BY	CHECKED	LOAD FACTOR DESIGN	LIVE LOADING: HS20-44 AND ALTERNATIVE AND PERMIT DESIGN LOAD		STATE OF CALIFORNIA DEPARTMENT OF TRANSPORTATION	DIVISION OF MAINTENANCE STRUCTURE MAINTENANCE AND INVESTIGATIONS	BRIDGE NO. 23-0004	GREEN VALLEY CREEK
DESIGN	L. Ellis	H. Su						POST MILE 12.91	GENERAL PLAN 1
DETAILS	B. Ballesteros	L. Ellis	LAYOUT	B. Ballesteros	L. Ellis				
QUANTITIES	L. Ellis	H. Su	SPECIFICATIONS	D. Klein	PLANS AND SPECS COMPARED D. Klein				

Kenneth R Brown — DESIGN ENGINEER 8-10-11

STRUCTURES MAINTENANCE GENERAL PLAN SHEET (ENGLISH) (REV. 09-01-10)

ORIGINAL SCALE IN INCHES FOR REDUCED PLANS 0 1 2 3

UNIT: 0989
PROJECT NUMBER & PHASE: 0400020051 CONTRACT NO.: 04-2E2601

DISREGARD PRINTS BEARING EARLIER REVISION DATES →

REVISION DATES				SHEET	OF
05-25-11	07-20-11			1	13

FILE => 0400020051agp01.dgn

USERNAME => S135695 DATE PLOTTED => 17-FEB-2012 TIME PLOTTED => 07:55

DIST	COUNTY	ROUTE	POST MILES TOTAL PROJECT	SHEET No.	TOTAL SHEETS
04	Sol	80, 680	Var	16	27

REGISTERED CIVIL ENGINEER — 8-10-11 DATE

PLANS APPROVAL DATE

REGISTERED PROFESSIONAL ENGINEER — LINA G. ELLIS — No. C65260 — Exp. 9-30-11 — CIVIL — STATE OF CALIFORNIA

The State of California or its officers or agents shall not be responsible for the accuracy or completeness of electronic copies of this plan sheet.

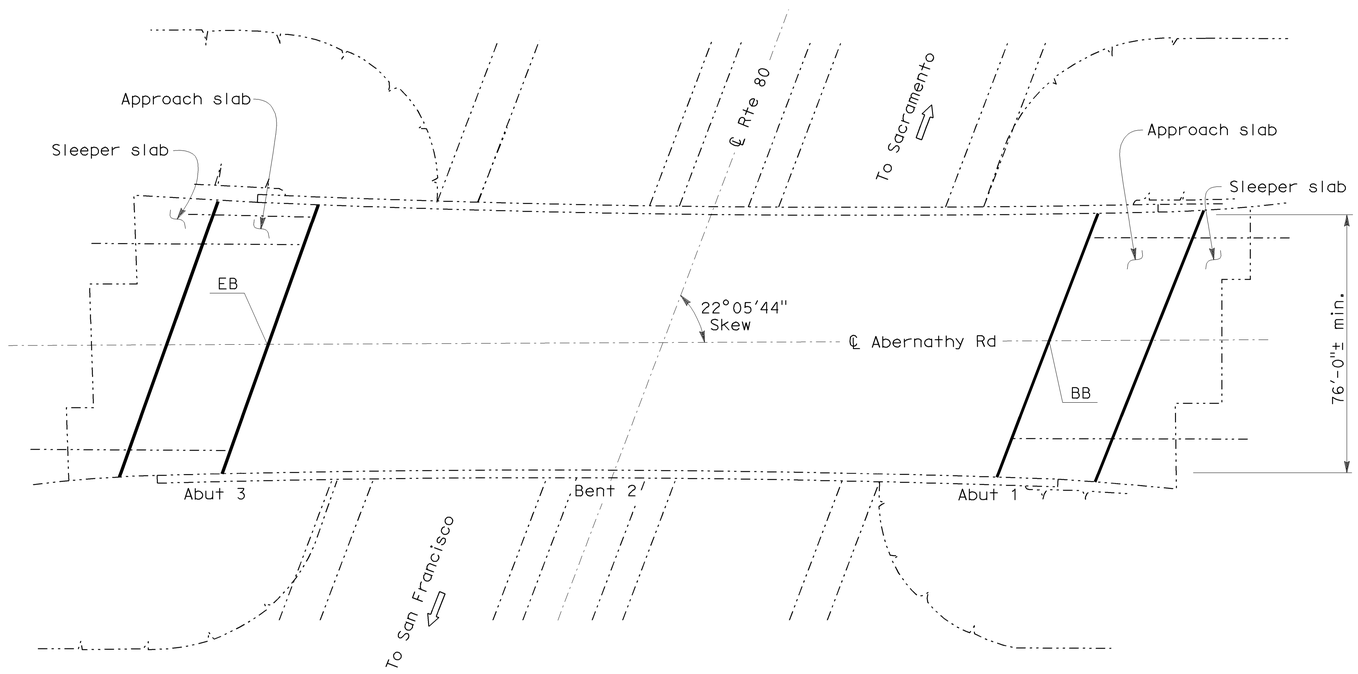

LEGEND:

- Indicates existing structure
- Indicates direction of traffic
- Indicates location of clean expansion joint and replace joint seal. Prior to replacement of joint seal, repair joint spall. See "JOINT SPALL REPAIR DETAIL" on "DECK REPAIR TABLE AND DETAILS" sheet.

(2) ABERNATHY ROAD OC

Br No. 23-0141, Rte 80, PM 16.17
No Scale

ABERNATHY ROAD OC — BRIDGE NO. 23-0141

QUANTITIES

CLEAN EXPANSION JOINT	336	LF
JOINT SEAL (MR 1/2 ")	168	LF
JOINT SEAL (MR 1 1/2 ")	168	LF

NOTE:
THE CONTRACTOR SHALL VERIFY ALL CONTROLLING FIELD DIMENSIONS BEFORE ORDERING OR FABRICATING ANY MATERIAL.

REPLACE JOINT SEALS, STRUCTURE APPROACH, TREAT BRIDGE DECKS & BRIDGE DECK OVERLAY

		BY	CHECKED	LOAD FACTOR DESIGN	LIVE LOADING: HS20-44 AND ALTERNATIVE AND PERMIT DESIGN LOAD	
Kenneth R Brown	DESIGN	L. Ellis	H. Su			
DESIGN ENGINEER 8-10-11	DETAILS	B. Ballesteros	L. Ellis	LAYOUT	B. Ballesteros	L. Ellis
	QUANTITIES	L. Ellis	H. Su	SPECIFICATIONS	D. Klein	PLANS AND SPECS COMPARED: D. Klein

STATE OF CALIFORNIA
DEPARTMENT OF TRANSPORTATION

DIVISION OF MAINTENANCE
STRUCTURE MAINTENANCE AND INVESTIGATIONS

BRIDGE NO. 23-0141
POST MILE 12.74

ABERNATHY ROAD OVERCROSSING
GENERAL PLAN 2

STRUCTURES MAINTENANCE GENERAL PLAN SHEET (ENGLISH) (REV. 09-01-10)

ORIGINAL SCALE IN INCHES FOR REDUCED PLANS 0 1 2 3

UNIT: 0989
PROJECT NUMBER & PHASE: 0400020051
CONTRACT NO.: 04-2E2601

DISREGARD PRINTS BEARING EARLIER REVISION DATES →

REVISION DATES				SHEET	OF
05-25-11				2	13

USERNAME => s135695 DATE PLOTTED => 17-FEB-2012 TIME PLOTTED => 07:55
FILE => 0400020051agp02.dgn

DIST	COUNTY	ROUTE	POST MILES TOTAL PROJECT	SHEET No.	TOTAL SHEETS
04	Sol	80, 680	Var	17	27

REGISTERED CIVIL ENGINEER — 8-10-11 DATE

PLANS APPROVAL DATE

REGISTERED PROFESSIONAL ENGINEER — LINA G. ELLIS — No. C65260 — Exp. 9-30-11 — CIVIL — STATE OF CALIFORNIA

The State of California or its officers or agents shall not be responsible for the accuracy or completeness of electronic copies of this plan sheet.

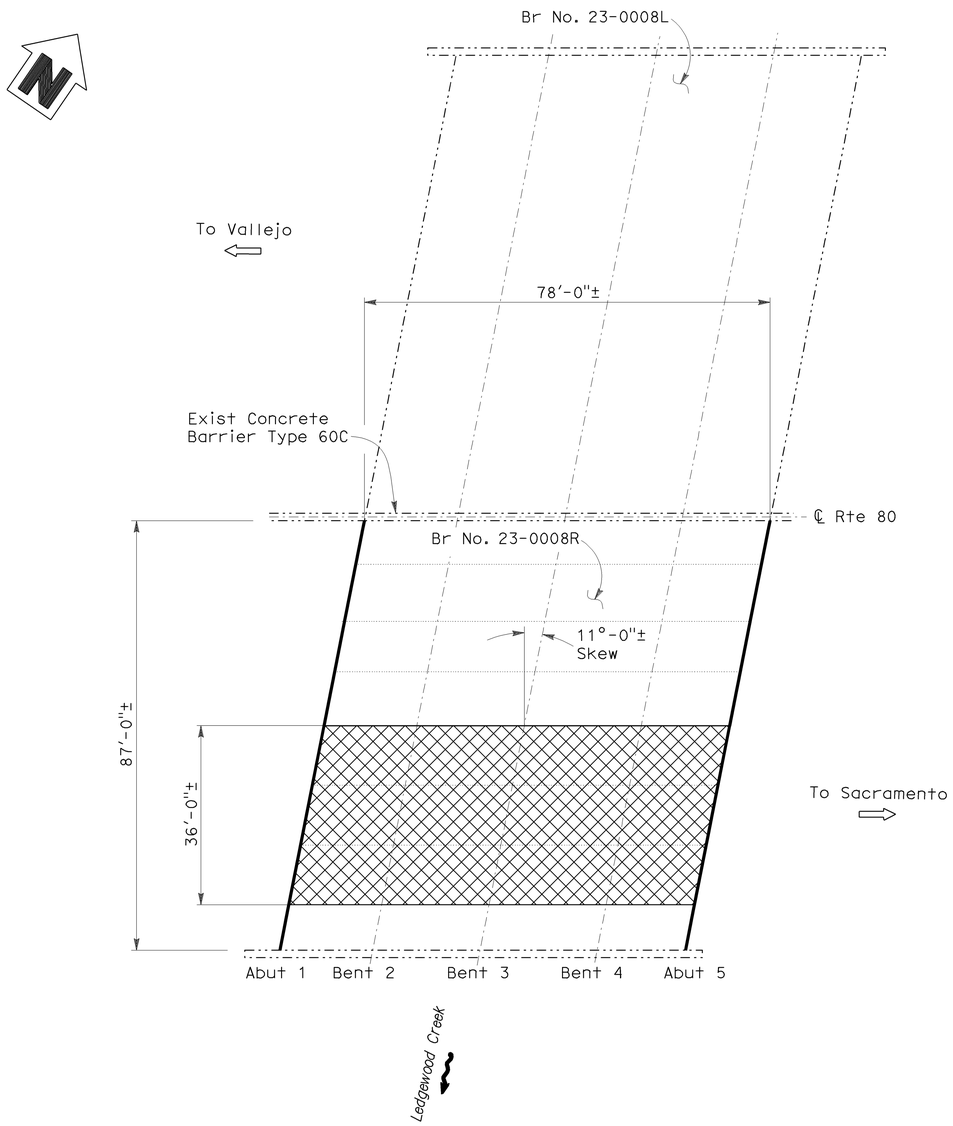

3 **LEDGEWOOD CREEK**

Br No. 23-0008R, Rte 80, PM 17.02

No Scale

LEGEND:

- Indicates existing structure
- Indicates direction of traffic
- Indicates limits of removing existing PCC overlay (4"), prepare concrete bridge deck surface and overlaying bridge deck with 4" polyester concrete overlay. See "DECK REPAIR DETAIL 1" on "DECK REPAIR TABLE AND DETAILS" sheet.
- Indicates location of existing joint seal removal and placement of new joint seal. Prior to placement of new joint seal, repair joint spalls. See "JOINT SEAL TABLE AND DETAILS" sheet.
- (-) Indicates bridge location. see "Title" sheet.

LEDGEWOOD CREEK — BRIDGE NO. 23-0008R

QUANTITIES

REMOVE CONCRETE DECK SURFACE	2,808	SQFT
PREPARE CONCRETE BRIDGE DECK SURFACE	2,808	SQFT
CLEAN EXPANSION JOINT	182	LF
FURNISH POLYESTER CONCRETE OVERLAY	1,123	CF
PLACE POLYESTER CONCRETE OVERLAY	2,808	SQFT
JOINT SEAL (MR 1/2")	182	L

NOTE:

THE CONTRACTOR SHALL VERIFY ALL CONTROLLING FIELD DIMENSIONS BEFORE ORDERING OR FABRICATING ANY MATERIAL.

REPLACE JOINT SEALS, STRUCTURE APPROACH, TREAT BRIDGE DECKS & BRIDGE DECK OVERLAY

DESIGN	BY L. Ellis	CHECKED H. Su	LOAD FACTOR DESIGN	LIVE LOADING: HS20-44 AND ALTERNATIVE AND PERMIT DESIGN LOAD		STATE OF CALIFORNIA DEPARTMENT OF TRANSPORTATION	DIVISION OF MAINTENANCE STRUCTURE MAINTENANCE AND INVESTIGATIONS
DETAILS	BY B. Ballesteros	CHECKED L. Ellis	LAYOUT	BY B. Ballesteros	CHECKED L. Ellis		
QUANTITIES	BY L. Ellis	CHECKED H. Su	SPECIFICATIONS	BY D. Klein	PLANS AND SPECS COMPARED D. Klein		

Kenneth R Brown — DESIGN ENGINEER — 8-10-11

BRIDGE NO. 23-0008R — POST MILE 17.02

LEDGEWOOD CREEK

GENERAL PLAN 3

STRUCTURES MAINTENANCE GENERAL PLAN SHEET (ENGLISH) (REV. 09-01-10)

ORIGINAL SCALE IN INCHES FOR REDUCED PLANS 0 1 2 3

UNIT: 0989 PROJECT NUMBER & PHASE: 0400020051 CONTRACT NO.: 04-2E2601

DISREGARD PRINTS BEARING EARLIER REVISION DATES →

REVISION DATES				SHEET	OF
05-25-11	07-21-11			3	13

FILE => 0400020051agp03.dgn

USERNAME = s135695 DATE PLOTTED => 17-FEB-2012 TIME PLOTTED => 07:56

DIST	COUNTY	ROUTE	POST MILES TOTAL PROJECT	SHEET No.	TOTAL SHEETS
04	Sol	80, 680	Var	18	27

REGISTERED CIVIL ENGINEER — 8-10-11 DATE

PLANS APPROVAL DATE

LINA G. ELLIS No. C65260 Exp. 9-30-11 CIVIL — REGISTERED PROFESSIONAL ENGINEER — STATE OF CALIFORNIA

The State of California or its officers or agents shall not be responsible for the accuracy or completeness of electronic copies of this plan sheet.

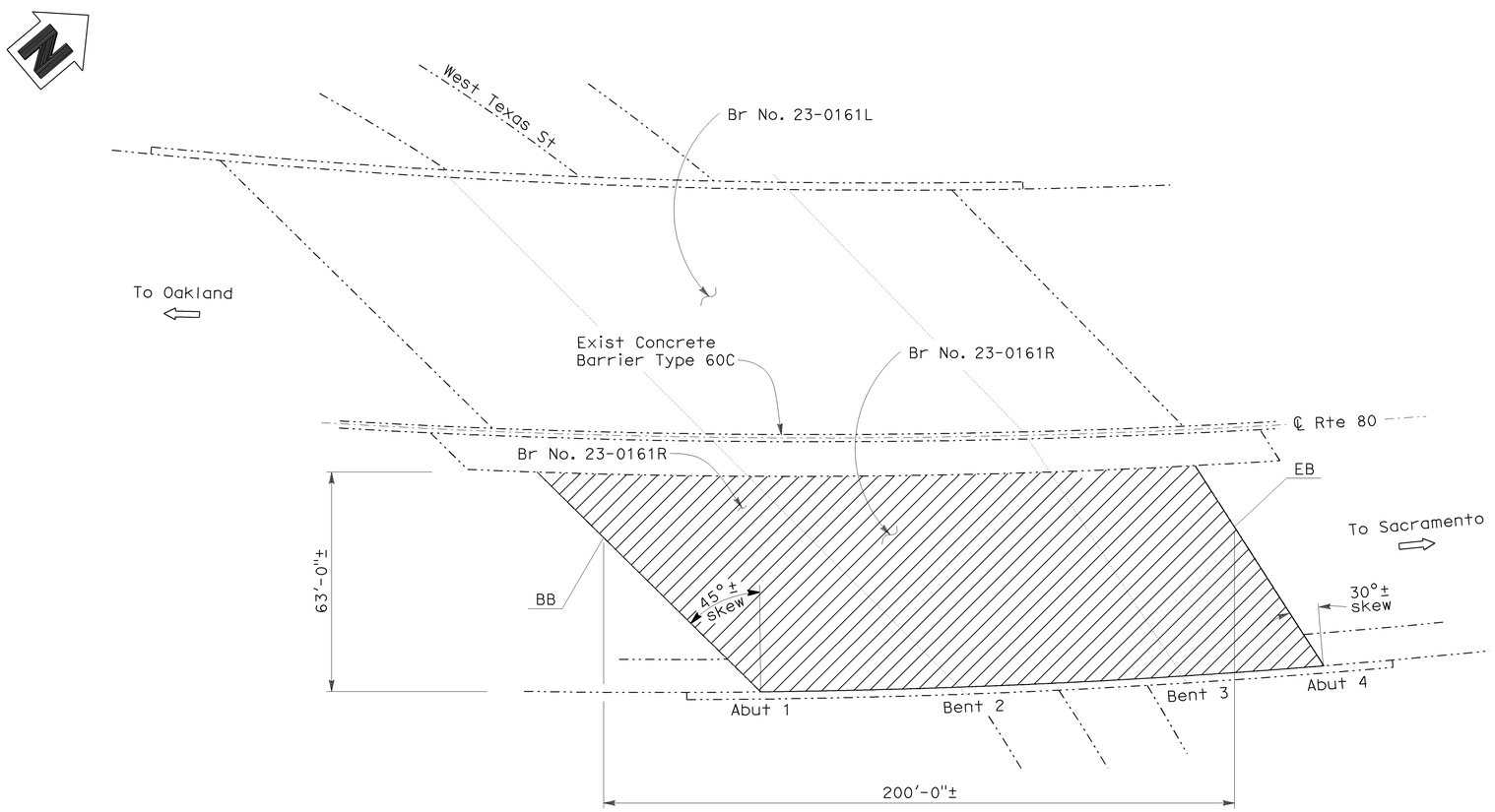

④ WEST TEXAS STREET UC

Br No. 23-0106R, Rte 80, PM 17.20
No Scale

LEGEND:

- Indicates existing structure
- Indicates direction of traffic
- Indicates limits of remove unsound concrete and replace with rapid setting concrete (patch), prepare concrete bridge deck surface and treat deck with hich molecular weight methacrylate. See "DECK REPAIR DETAIL 2" on "DECK REPAIR TABLE AND DETAIL" sheet.
- (-) Indicates bridge location. see "Title" sheet.

WEST TEXAS STREET UC — BRIDGE NO. 23-0106R

QUANTITIES

REMOVE UNSOUND CONCRETE	32	CF
PREPARE CONCRETE BRIDGE DECK SURFACE	12,600	SQFT
RAPID SETTING CONCRETE (PATCH)	32	CF
TREAT BRIDGE DECK	12,600	SQFT
FURNISH BRIDGE DECK TREATMENT MATERIAL	140	GAL

NOTE:
THE CONTRACTOR SHALL VERIFY ALL CONTROLLING FIELD DIMENSIONS BEFORE ORDERING OR FABRICATING ANY MATERIAL.

	BY	CHECKED
DESIGN	L. Ellis	H. Su
DETAILS	B. Ballesteros	L. Ellis
QUANTITIES	L. Ellis	H. Su

LOAD FACTOR DESIGN — LIVE LOADING: HS20-44 AND ALTERNATIVE AND PERMIT DESIGN LOAD

	BY	CHECKED
LAYOUT	B. Ballesteros	L. Ellis
SPECIFICATIONS	D. Klein	PLANS AND SPECS COMPARED: D. Klein

Kenneth R Brown
DESIGN ENGINEER 8-10-11

STATE OF CALIFORNIA
DEPARTMENT OF TRANSPORTATION

DIVISION OF MAINTENANCE
STRUCTURE MAINTENANCE AND INVESTIGATIONS

BRIDGE NO. 23-0106R
POST MILE 17.20

REPLACE JOINT SEALS, STRUCTURE APPROACH, TREAT BRIDGE DECKS & BRIDGE DECK OVERLAY

WEST TEXAS STREET UNDERCROSSING

GENERAL PLAN 4

STRUCTURES MAINTENANCE GENERAL PLAN SHEET (ENGLISH) (REV. 09-01-10)

ORIGINAL SCALE IN INCHES FOR REDUCED PLANS 0 1 2 3

UNIT: 0989
PROJECT NUMBER & PHASE: 0400020051
CONTRACT NO.: 04-2E2601

DISREGARD PRINTS BEARING EARLIER REVISION DATES →

REVISION DATES				SHEET	OF
05-25-11				4	13

FILE => 0400020051agp04.dgn

USERNAME => s135695 DATE PLOTTED => 17-FEB-2012 TIME PLOTTED => 07:57

DIST	COUNTY	ROUTE	POST MILES TOTAL PROJECT	SHEET No.	TOTAL SHEETS
04	Sol	80, 680	Var	19	27

REGISTERED CIVIL ENGINEER — 8-10-11 DATE

PLANS APPROVAL DATE

REGISTERED PROFESSIONAL ENGINEER — LINA G. ELLIS — No. C65260 — Exp. 9-30-11 — CIVIL — STATE OF CALIFORNIA

The State of California or its officers or agents shall not be responsible for the accuracy or completeness of electronic copies of this plan sheet.

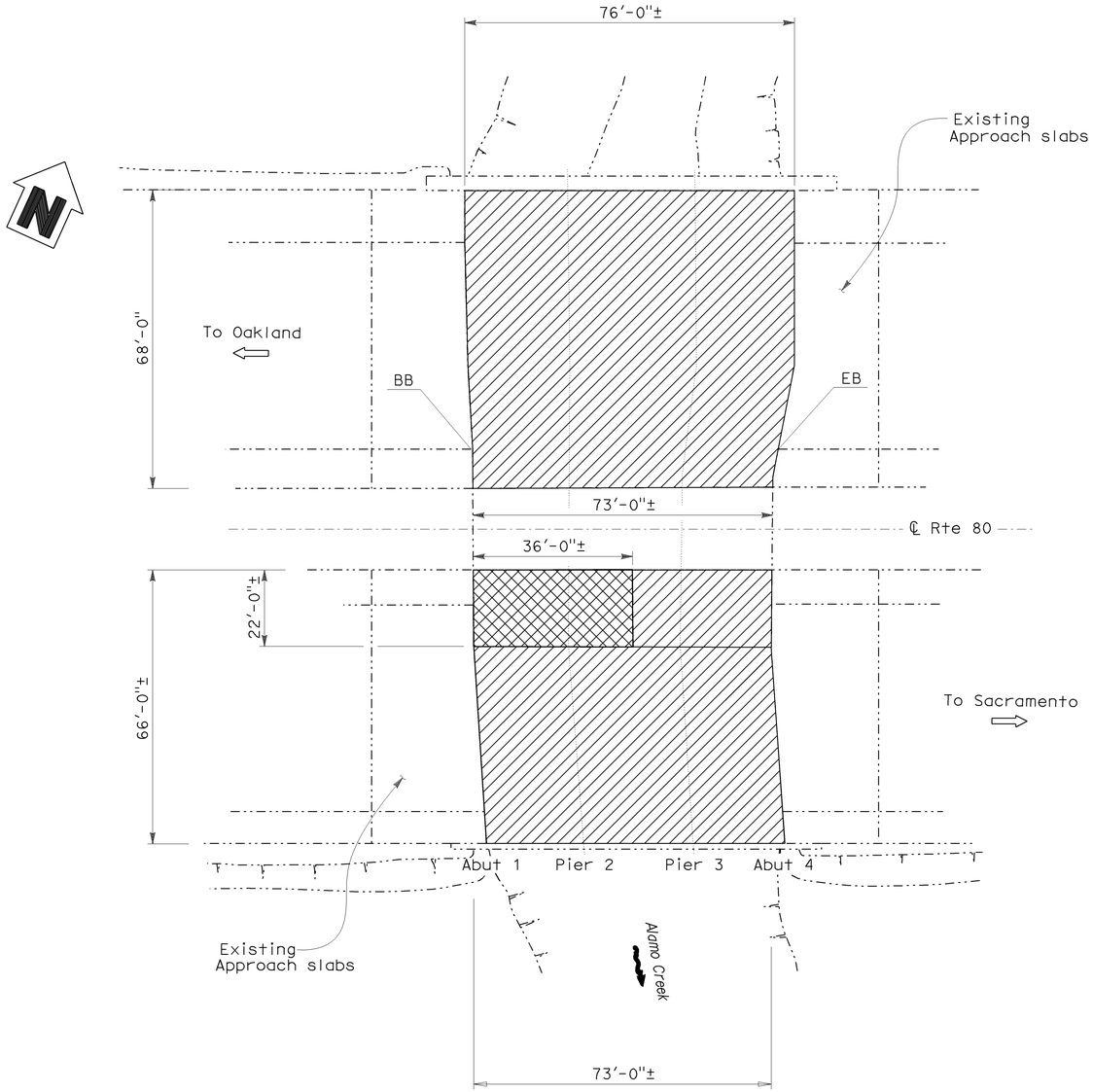

5 **ALAMO CREEK**

Br No. 23-0010, Rte 80, PM R25.03
No Scale

LEGEND:

- Indicates existing structure
- Indicates direction of traffic
- Indicates limits of remove unsound concrete and replace with rapid setting concrete (patch), prepare concrete bridge deck surface and treat deck with hich molecular weight methacrylate. See "DECK REPAIR DETAIL 2" on "DECK REPAIR TABLE AND DETAIL" sheet.
- Indicates limits of remove existing 1" AC overlay, remove unsound concrete and replace with rapid setting concrete (patch), prepare and treat with high molecular weight methacrylate. See "DECK REPAIR DETAIL 1" on "DECK REPAIR TABLE AND DETAIL" sheet.
- (-) Indicates bridge location. see "Title" sheet.

ALAMO CREEK — BRIDGE NO. 23-0010

QUANTITIES		
REMOVE ASPHALT CONCRETE SURFACING	792	SQFT
REMOVE UNSOUND CONCRETE	25	CF
PREPARE CONCRETE BRIDGE DECK SURFACE	9,850	SQFT
RAPID SETTING CONCRETE (PATCH)	25	CF
TREAT BRIDGE DECK	9,850	SQFT
FURNISH BRIDGE DECK TREATMENT MATERIAL	110	GAL

NOTE:
THE CONTRACTOR SHALL VERIFY ALL CONTROLLING FIELD DIMENSIONS BEFORE ORDERING OR FABRICATING ANY MATERIAL.

REPLACE JOINT SEALS, STRUCTURE APPROACH, TREAT BRIDGE DECKS & BRIDGE DECK OVERLAY

Kenneth R Brown
DESIGN ENGINEER 8-10-11

DESIGN	BY L. Ellis	CHECKED H. Su	LOAD FACTOR DESIGN	LIVE LOADING: HS20-44 AND ALTERNATIVE AND PERMIT DESIGN LOAD			
DETAILS	BY B. Ballesteros	CHECKED L. Ellis	LAYOUT	BY B. Ballesteros	CHECKED L. Ellis		
QUANTITIES	BY L. Ellis	CHECKED H. Su	SPECIFICATIONS	BY D. Klein	PLANS AND SPECS COMPARED D. Klein		

STATE OF CALIFORNIA
DEPARTMENT OF TRANSPORTATION

DIVISION OF MAINTENANCE
STRUCTURE MAINTENANCE AND INVESTIGATIONS

BRIDGE NO. 23-0010
POST MILE R25.03

ALAMO CREEK

GENERAL PLAN 5

STRUCTURES MAINTENANCE GENERAL PLAN SHEET (ENGLISH) (REV. 09-01-10)

ORIGINAL SCALE IN INCHES FOR REDUCED PLANS 0 1 2 3

UNIT: 0989
PROJECT NUMBER & PHASE: 0400020051
CONTRACT NO.: 04-2E2601

DISREGARD PRINTS BEARING EARLIER REVISION DATES →

REVISION DATES				SHEET	OF
05-25-11	07-21-11			5	13

FILE => 0400020051agp05.dgn

USERNAME => s135695 DATE PLOTTED => 17-FEB-2012 TIME PLOTTED => 07:57

DIST	COUNTY	ROUTE	POST MILES TOTAL PROJECT	SHEET No.	TOTAL SHEETS
04	Sol	80, 680	Var	20	27

REGISTERED CIVIL ENGINEER — 8-10-11 DATE

PLANS APPROVAL DATE

REGISTERED PROFESSIONAL ENGINEER — LINA G. ELLIS — No. C65260 — Exp. 9-30-11 — CIVIL — STATE OF CALIFORNIA

The State of California or its officers or agents shall not be responsible for the accuracy or completeness of electronic copies of this plan sheet.

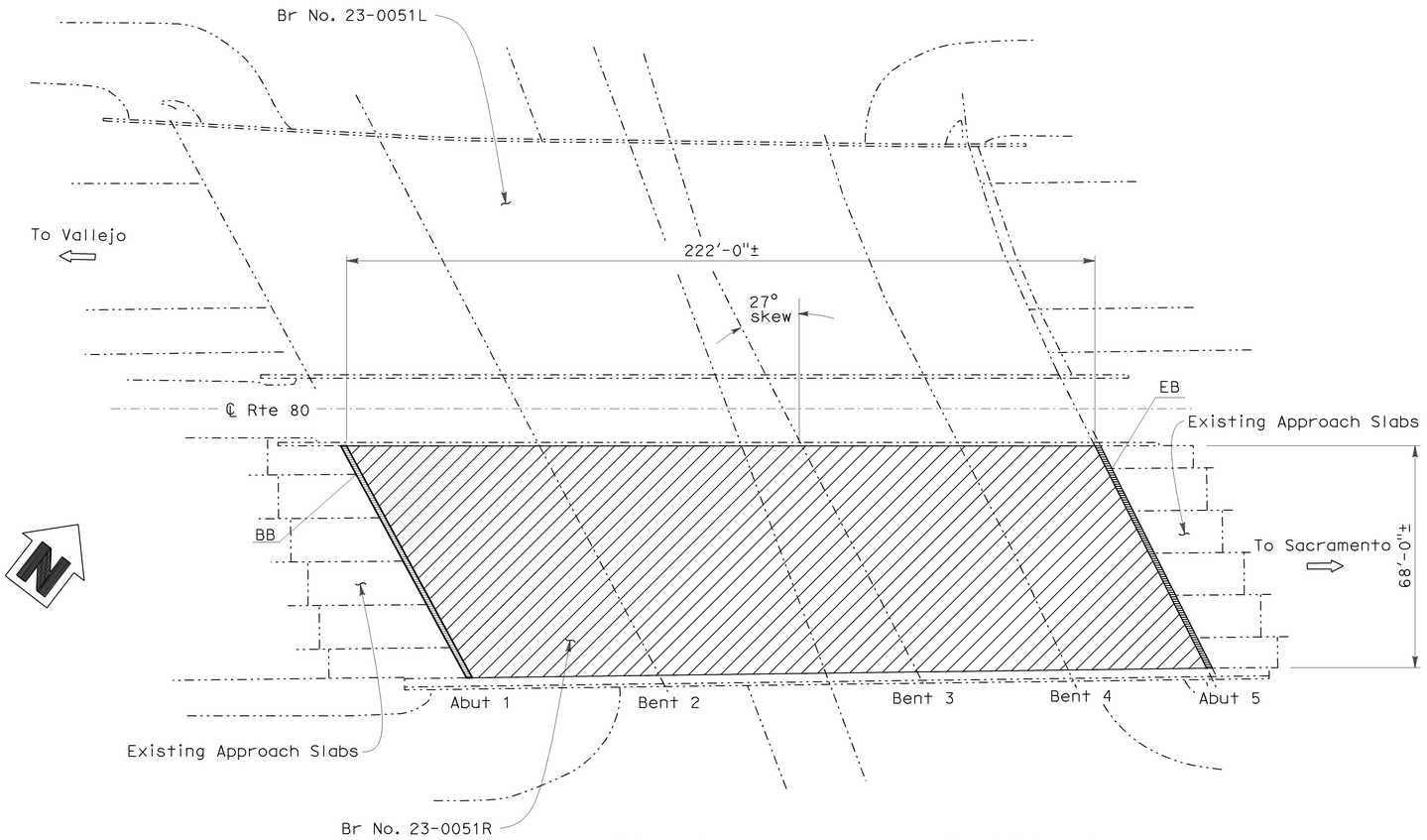

6 MASON STREET UNDERCROSSING

Br No. 23-0051R, Rte 80, PM R26.46
No Scale

LEGEND:

- Indicates existing structure
- Indicates direction of traffic
- Indicates location of remove portion of existing backwall, and joint seal, extend the existing structure approach and replace the joint seal. See Existing and Reconstruction Details this sheet, and "JOINT SEAL TABLE AND DETAILS" sheet.
- Indicates limits of remove unsound concrete and replace with rapid setting concrete (patch), prepare concrete bridge deck surface and treat deck with hich molecular weight methacrylate. See "DECK REPAIR DETAIL 2" on "DECK REPAIR TABLE AND DETAIL" sheet.
- (-) Indicates bridge location. see "Title" sheet.
- Indicates limits of remove existing concrete and joint seal.
- Indicates limits of place new concrete, and reinforcing steel.

NOTE:
THE CONTRACTOR SHALL VERIFY ALL CONTROLLING FIELD DIMENSIONS BEFORE ORDERING OR FABRICATING ANY MATERIAL.

MASON STREET UC — BRIDGE NO. 23-0051R

QUANTITIES		
REMOVE UNSOUND CONCRETE	38	CF
PREPARE CONCRETE BRIDGE DECK SURFACE	15,096	SQFT
BRIDGE REMOVAL (PORTION)	LUMP	SUM
STRUCTURAL CONCRETE, BRIDGE	5	CY
DRILL AND BOND DOWEL	154	LF
RAPID SETTING CONCRETE (PATCH)	38	CF
JOINT SEAL (MR 1 1/2")	158	LF
BAR REINFORCING STEEL (BRIDGE)	1,290	LB
TREAT BRIDGE DECK	15,096	SQFT
FURNISH BRIDGE DECK TREATMENT MATERIAL	168	GAL
PUBLIC SAFETY PLAN	LUMP	SUM

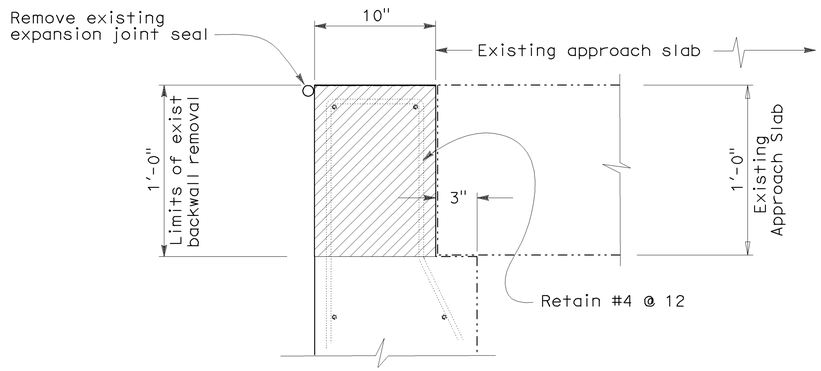

EXISTING
No scale

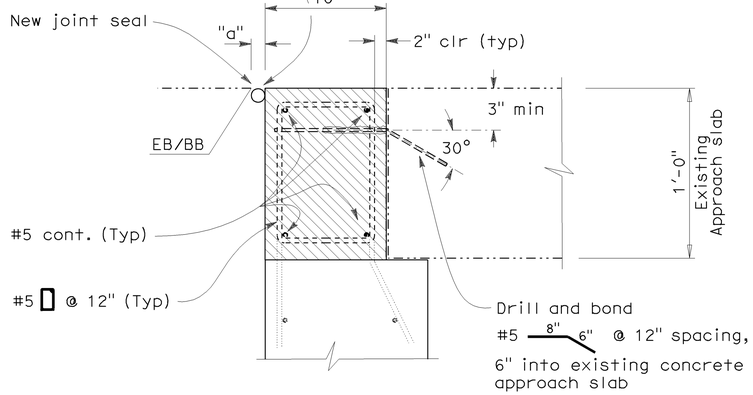

RECONSTRUCTION
No scale

BACKWALL REMOVAL (PORTION) AND APPROACH SLAB EXTENSION @ BB & EB

REPLACE JOINT SEALS, STRUCTURE APPROACH, TREAT BRIDGE DECKS & BRIDGE DECK OVERLAY

MASON STREET UNDERCROSSING

GENERAL PLAN 6

Kenneth R Brown — DESIGN ENGINEER — 8-10-11

DESIGN	BY L. Ellis	CHECKED H. Su	LOAD FACTOR DESIGN	LIVE LOADING: HS20-44 AND ALTERNATIVE AND PERMIT DESIGN LOAD			
DETAILS	BY B. Ballesteros	CHECKED L. Ellis	LAYOUT	BY B. Ballesteros	CHECKED L. Ellis		
QUANTITIES	BY L. Ellis	CHECKED H. Su	SPECIFICATIONS	BY D. Klein	PLANS AND SPECS COMPARED D. Klein		

STATE OF CALIFORNIA
DEPARTMENT OF TRANSPORTATION

DIVISION OF MAINTENANCE
STRUCTURE MAINTENANCE AND INVESTIGATIONS

BRIDGE NO. 23-0051R
POST MILE 26.5

STRUCTURES MAINTENANCE GENERAL PLAN SHEET (ENGLISH) (REV. 09-01-10)

ORIGINAL SCALE IN INCHES FOR REDUCED PLANS 0 1 2 3

UNIT: 0989
PROJECT NUMBER & PHASE: 0400020051
CONTRACT NO.: 04-2E2601

DISREGARD PRINTS BEARING EARLIER REVISION DATES →

REVISION DATES				SHEET	OF
05-25-11	07-21-11			6	13

FILE => 0400020051agp06.dgn

USERNAME => s135695 DATE PLOTTED => 17-FEB-2012 TIME PLOTTED => 07:58

DIST	COUNTY	ROUTE	POST MILES TOTAL PROJECT	SHEET No.	TOTAL SHEETS
04	Sol	80, 680	Var	21	27

REGISTERED CIVIL ENGINEER — 8-10-11 DATE

PLANS APPROVAL DATE

LINA G. ELLIS No. C65260 Exp. 9-30-11 CIVIL — REGISTERED PROFESSIONAL ENGINEER — STATE OF CALIFORNIA

The State of California or its officers or agents shall not be responsible for the accuracy or completeness of electronic copies of this plan sheet.

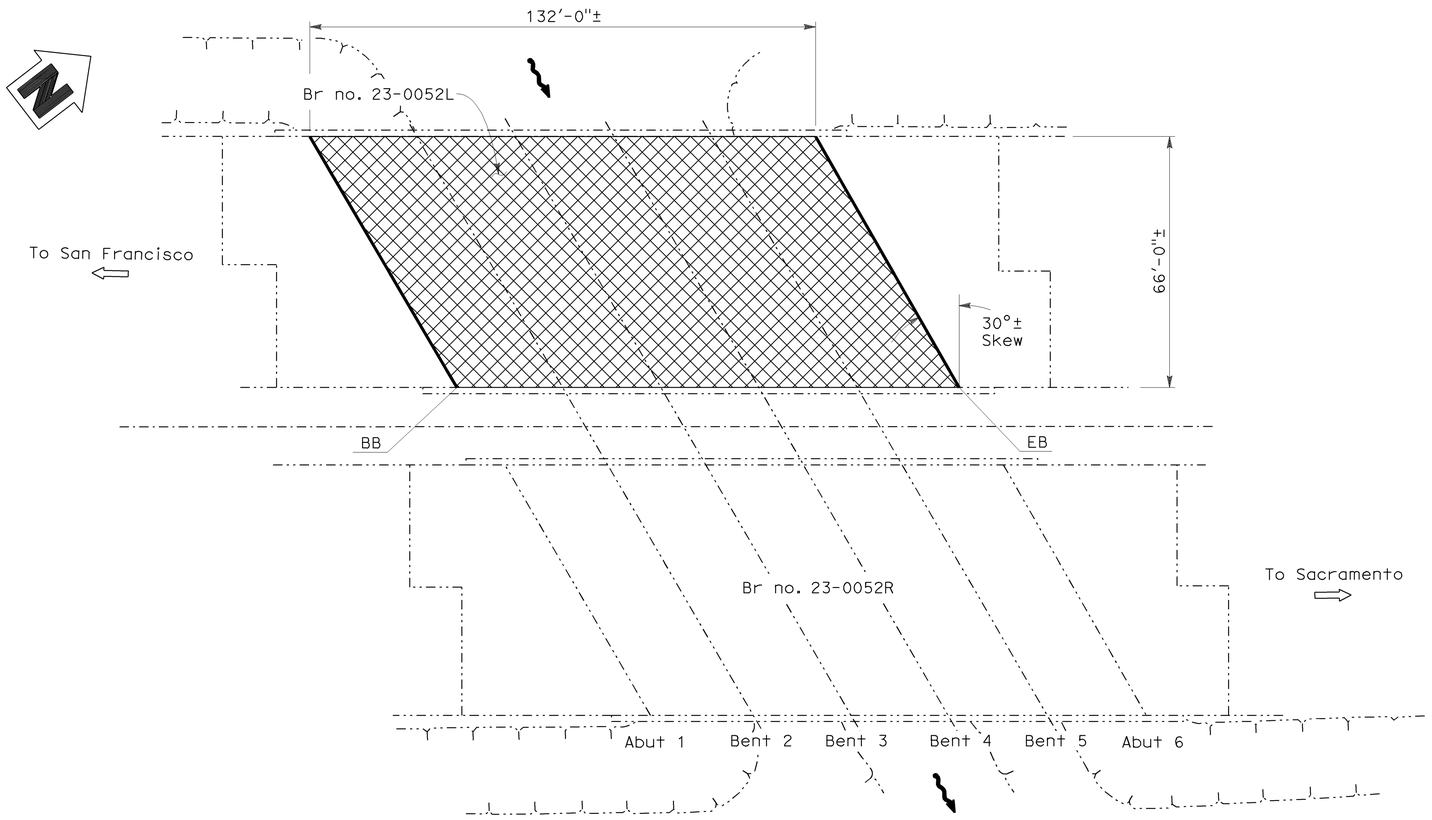

LEGEND:

- Indicates existing structure
- Indicates direction of traffic
- Indicates location of clean expansion joints and replace joint seal.
- Indicates limits of remove ½" concrete deck surface, prepare concrete bridge deck surface and place ¾" polyester concrete overlay. See "DECK REPAIR DETAIL 1" on "DECK REPAIR TABLE AND DETAIL SHEET".
- (7) Indicates bridge location. see "Title" sheet.

(7) ULATIS CREEK

Br No. 23-0052L, Rte 80, PM R26.61
No Scale

ULATIS CREEK BRIDGE NO. 23-0052L

QUANTITIES

REMOVE CONCRETE DECK SURFACE	8,712	SQFT
REMOVE UNSOUND CONCRETE	22	CF
PREPARE CONCRETE BRIDGE DECK SURFACE	8,712	SQFT
CLEAN EXPANSION JOINT	158	LF
RAPID SETTING CONCRETE (PATCH)	22	CF
FURNISH POLYESTER CONCRETE OVERLAY	653	CF
PLACE POLYESTER CONCRETE OVERLAY	8,712	SQFT
JOINT SEAL (MR 1 1/2")	158	LF

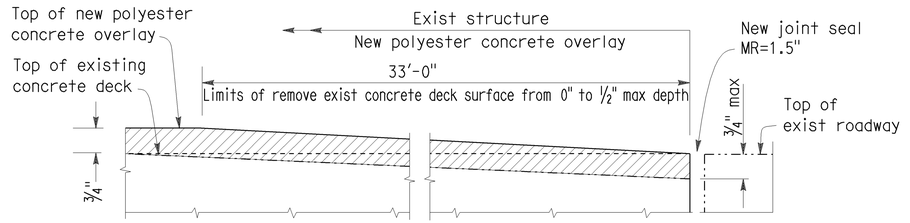

LONGITUDINAL DECK CONFORMANCE DETAIL

NO SCALE

NOTE:
THE CONTRACTOR SHALL VERIFY ALL CONTROLLING FIELD DIMENSIONS BEFORE ORDERING OR FABRICATING ANY MATERIAL.

REPLACE JOINT SEALS, STRUCTURE APPROACH, TREAT BRIDGE DECKS & BRIDGE DECK OVERLAY

Kenneth R Brown
DESIGN ENGINEER 8-10-11

DESIGN	BY L. Ellis	CHECKED H. Su	LOAD FACTOR DESIGN	LIVE LOADING: HS20-44 AND ALTERNATIVE AND PERMIT DESIGN LOAD			
DETAILS	BY B. Ballesteros	CHECKED L. Ellis	LAYOUT	BY B. Ballesteros	CHECKED L. Ellis		
QUANTITIES	BY L. Ellis	CHECKED H. Su	SPECIFICATIONS	BY D. Klein	PLANS AND SPECS COMPARED D. Klein		

STATE OF CALIFORNIA
DEPARTMENT OF TRANSPORTATION

DIVISION OF MAINTENANCE
STRUCTURE MAINTENANCE AND INVESTIGATIONS

BRIDGE NO. 23-0052L
POST MILE 42.8

ULATIS CREEK
GENERAL PLAN 7

STRUCTURES MAINTENANCE GENERAL PLAN SHEET (ENGLISH) (REV. 09-01-10)

ORIGINAL SCALE IN INCHES FOR REDUCED PLANS 0 1 2 3

UNIT: 0989
PROJECT NUMBER & PHASE: 0400020051
CONTRACT NO.: 04-2E2601

DISREGARD PRINTS BEARING EARLIER REVISION DATES →

REVISION DATES				SHEET	OF
05-25-11	07-21-11			7	13

FILE => 0400020051agp07.dgn

USERNAME => s135695 DATE PLOTTED => 17-FEB-2012 TIME PLOTTED => 07:59

DIST	COUNTY	ROUTE	POST MILES TOTAL PROJECT	SHEET No.	TOTAL SHEETS
04	Sol	80, 680	Var	22	27

REGISTERED CIVIL ENGINEER — 8-10-11 DATE

PLANS APPROVAL DATE

REGISTERED PROFESSIONAL ENGINEER — LINA G. ELLIS — No. C65260 — Exp. 9-30-11 — CIVIL — STATE OF CALIFORNIA

The State of California or its officers or agents shall not be responsible for the accuracy or completeness of electronic copies of this plan sheet.

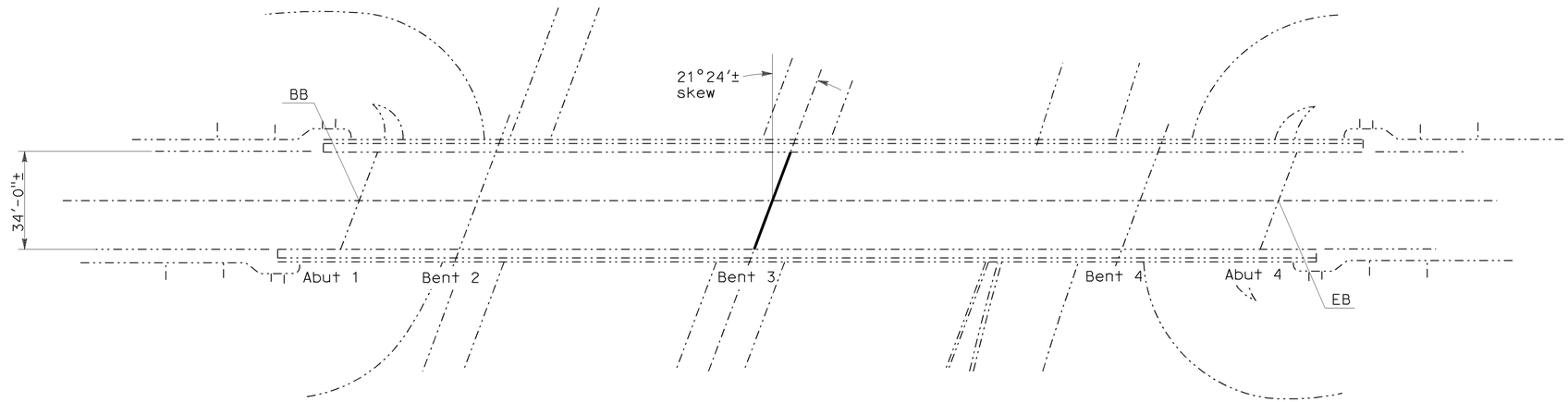

(8) MIDWAY ROAD OC

Br No. 23-0148, Rte 80, PM 32.62
No Scale

MIDWAY ROAD OC — BRIDGE NO. 23-0148

QUANTITIES

CLEAN EXPANSION JOINT	36	LF
JOINT SEAL (MR 1 1/2")	36	LF

LEGEND:

- Indicates existing structure
- Indicates direction of traffic
- Indicates location of clean expansion joint and replace joint seal.
- (-) Indicates bridge location. see "Title" sheet.

NOTE:
THE CONTRACTOR SHALL VERIFY ALL CONTROLLING FIELD DIMENSIONS BEFORE ORDERING OR FABRICATING ANY MATERIAL.

REPLACE JOINT SEALS, STRUCTURE APPROACH, TREAT BRIDGE DECKS & BRIDGE DECK OVERLAY

Kenneth R Brown
DESIGN ENGINEER 8-10-11

DESIGN	BY L. Ellis	CHECKED H. Su	LOAD FACTOR DESIGN	LIVE LOADING: HS20-44 AND ALTERNATIVE AND PERMIT DESIGN LOAD			
DETAILS	BY B. Ballesteros	CHECKED L. Ellis	LAYOUT	BY B. Ballesteros	CHECKED L. Ellis		
QUANTITIES	BY L. Ellis	CHECKED H. Su	SPECIFICATIONS	BY D. Klein	PLANS AND SPECS COMPARED D. Klein		

STATE OF CALIFORNIA
DEPARTMENT OF TRANSPORTATION

DIVISION OF MAINTENANCE
STRUCTURE MAINTENANCE AND INVESTIGATIONS

BRIDGE NO. 23-0148
POST MILE 32.62

MIDWAY ROAD OVERCROSSING

GENERAL PLAN 8

STRUCTURES MAINTENANCE GENERAL PLAN SHEET (ENGLISH) (REV. 09-01-10)

ORIGINAL SCALE IN INCHES FOR REDUCED PLANS 0 1 2 3

UNIT: 0989
PROJECT NUMBER & PHASE: 0400020051
CONTRACT NO.: 04-2E2601

DISREGARD PRINTS BEARING EARLIER REVISION DATES →

REVISION DATES				SHEET	OF
05-25-11				8	13

USERNAME => s135695 DATE PLOTTED => 17-FEB-2012 TIME PLOTTED => 07:59

FILE => 0400020051agp08.dgn

DIST	COUNTY	ROUTE	POST MILES TOTAL PROJECT	SHEET No.	TOTAL SHEETS
04	Sol	80, 680	Var	23	27

REGISTERED CIVIL ENGINEER — 8-10-11 DATE

PLANS APPROVAL DATE

LINA G. ELLIS No. C65260 Exp. 9-30-11 CIVIL — REGISTERED PROFESSIONAL ENGINEER — STATE OF CALIFORNIA

The State of California or its officers or agents shall not be responsible for the accuracy or completeness of electronic copies of this plan sheet.

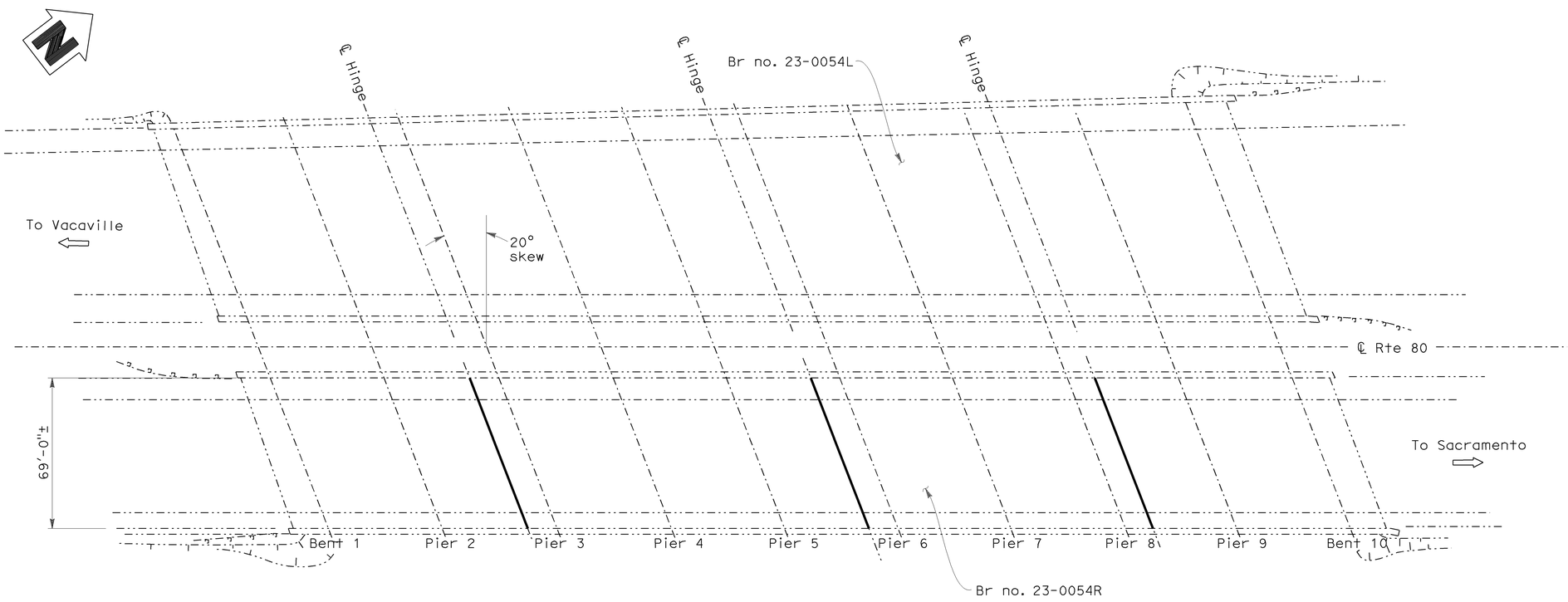

(9) SOUTH FORK PUTAH CREEK

Br No. 23-0054R, Rte 80, PM 42.36
No Scale

SOUTH FORK PUTAH CREEK BRIDGE NO. 23-0054R

QUANTITIES

CLEAN EXPANSION JOINT	228	LF
JOINT SEAL (MR 1 1/2")	228	LF

LEGEND:

- Indicates existing structure
- Indicates direction of traffic
- Indicates location of clean expansion joints and replace joint seal. Prior to replacement of joint seal, repair joint spall. See "JOINT SPALL REPAIR DETAIL" on "DECK REPAIR TABLE AND DETAILS" sheet.
- (-) Indicates bridge location. see "Title" sheet.

NOTE:
THE CONTRACTOR SHALL VERIFY ALL CONTROLLING FIELD DIMENSIONS BEFORE ORDERING OR FABRICATING ANY MATERIAL.

REPLACE JOINT SEALS, STRUCTURE APPROACH, TREAT BRIDGE DECKS & BRIDGE DECK OVERLAY

Kenneth R Brown
DESIGN ENGINEER 8-10-11

DESIGN	BY L. Ellis	CHECKED H. Su	LOAD FACTOR DESIGN	LIVE LOADING: HS20-44 AND ALTERNATIVE AND PERMIT DESIGN LOAD			
DETAILS	BY B. Ballesteros	CHECKED L. Ellis	LAYOUT	BY B. Ballesteros	CHECKED L. Ellis		
QUANTITIES	BY L. Ellis	CHECKED H. Su	SPECIFICATIONS	BY D. Klein	PLANS AND SPECS COMPARED D. Klein		

STATE OF CALIFORNIA
DEPARTMENT OF TRANSPORTATION

DIVISION OF MAINTENANCE
STRUCTURE MAINTENANCE AND INVESTIGATIONS

BRIDGE NO. 23-0054R
POST MILE 42.36

SOUTH FORK PUTAH CREEK BRIDGE
GENERAL PLAN 9

STRUCTURES MAINTENANCE GENERAL PLAN SHEET (ENGLISH) (REV. 09-01-10)

ORIGINAL SCALE IN INCHES FOR REDUCED PLANS 0 1 2 3

UNIT: 0989
PROJECT NUMBER & PHASE: 0400020051 CONTRACT NO.: 04-2E2601

DISREGARD PRINTS BEARING EARLIER REVISION DATES →

REVISION DATES				SHEET	OF
05-25-11				9	13

FILE => 0400020051agp09.dgn

USERNAME = s135695 DATE PLOTTED => 17-FEB-2012 TIME PLOTTED => 08:00

DIST	COUNTY	ROUTE	POST MILES TOTAL PROJECT	SHEET No.	TOTAL SHEETS
04	Sol	80, 680	Var	24	27

REGISTERED CIVIL ENGINEER — 8-10-11 DATE

PLANS APPROVAL DATE

LINA G. ELLIS No. C65260 Exp. 9-30-11 CIVIL — REGISTERED PROFESSIONAL ENGINEER — STATE OF CALIFORNIA

The State of California or its officers or agents shall not be responsible for the accuracy or completeness of electronic copies of this plan sheet.

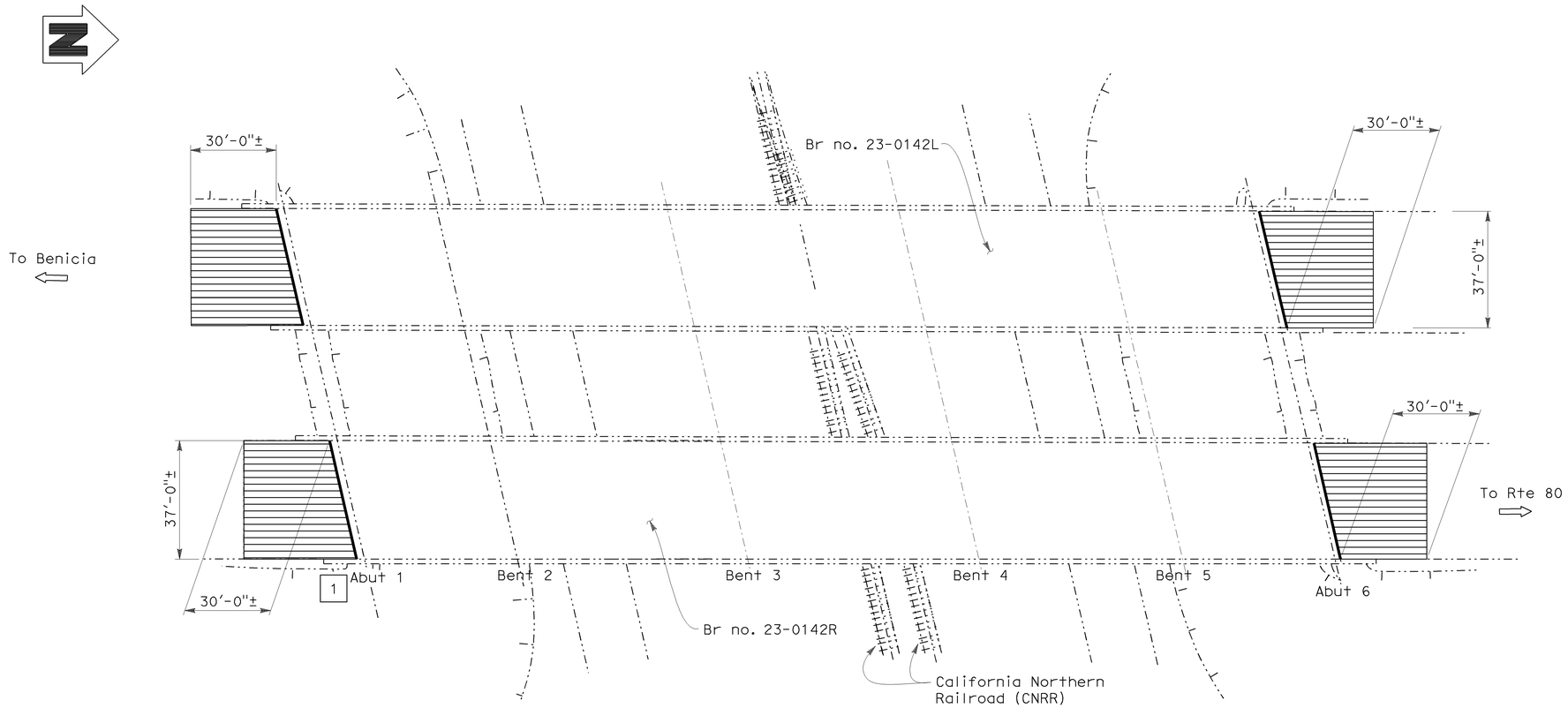

10 CORDELIA OVERHEAD

Br No. 23-0142R, Rte 680, PM 12.63
No Scale

LEGEND:

- Indicates existing structure
- Indicates direction of traffic
- Indicates location of existing joint seal removal and placement of new joint seal. For details see "Joint Seal Details" sheet.
- Indicates limits of placement of New Structure Approach, Type R(30S).
- [1] Indicates location of Erosion Gulley 2' x 1' x 0.5' to be filled with structure backfill.
- (-) Indicates bridge location. see "Title" sheet.

CORDELIA OH — BRIDGE NO. 23-0142R

QUANTITIES

AGGREGATE BASE (APPROACH SLAB)	19	CY
STRUCTURAL CONCRETE, APPROACH SLAB (TYPE R)	192	CY
JOINT SEAL (MR 1 1/2")	156	LF

NOTE:
THE CONTRACTOR SHALL VERIFY ALL CONTROLLING FIELD DIMENSIONS BEFORE ORDERING OR FABRICATING ANY MATERIAL.

REPLACE JOINT SEALS, STRUCTURE APPROACH, TREAT BRIDGE DECKS & BRIDGE DECK OVERLAY

DESIGN	BY L. Ellis	CHECKED H. Su	LOAD FACTOR DESIGN	LIVE LOADING: HS20-44 AND ALTERNATIVE AND PERMIT DESIGN LOAD		STATE OF CALIFORNIA DEPARTMENT OF TRANSPORTATION	DIVISION OF MAINTENANCE STRUCTURE MAINTENANCE AND INVESTIGATIONS
DETAILS	BY B. Ballesteros	CHECKED L. Ellis	LAYOUT	BY B. Ballesteros	CHECKED L. Ellis		
QUANTITIES	BY L. Ellis	CHECKED H. Su	SPECIFICATIONS	BY D. Klein	PLANS AND SPECS COMPARED D. Klein		

Kenneth R Brown — DESIGN ENGINEER 8-10-11

BRIDGE NO. 23-0142R
POST MILE 12.63

CORDELIA OVERHEAD
GENERAL PLAN 10

STRUCTURES MAINTENANCE GENERAL PLAN SHEET (ENGLISH) (REV. 09-01-10)

ORIGINAL SCALE IN INCHES FOR REDUCED PLANS 0 1 2 3

UNIT: 0989
PROJECT NUMBER & PHASE: 0400020051 CONTRACT NO.: 04-2E2601

DISREGARD PRINTS BEARING EARLIER REVISION DATES → REVISION DATES: 05-25-11 07-21-11

SHEET 10 OF 13

FILE => 0400020051agp10.dgn

USERNAME => s135695 DATE PLOTTED => 17-FEB-2012 TIME PLOTTED => 08:01

DIST	COUNTY	ROUTE	POST MILES TOTAL PROJECT	SHEET No.	TOTAL SHEETS
04	Sol	80, 680	Var	25	27

REGISTERED CIVIL ENGINEER — 8-10-11 DATE

PLANS APPROVAL DATE

REGISTERED PROFESSIONAL ENGINEER — LINA G. ELLIS — No. C65260 — Exp. 9-30-11 — CIVIL — STATE OF CALIFORNIA

The State of California or its officers or agents shall not be responsible for the accuracy or completeness of electronic copies of this plan sheet.

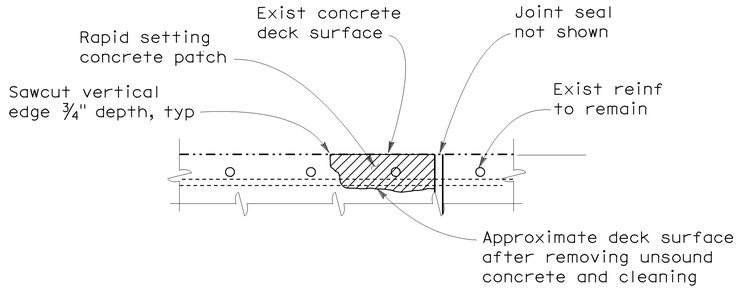

JOINT SPALL REPAIR DETAIL

Note: Reinforcement may be encountered during deck concrete removal. Location will be determined by the Engineer.

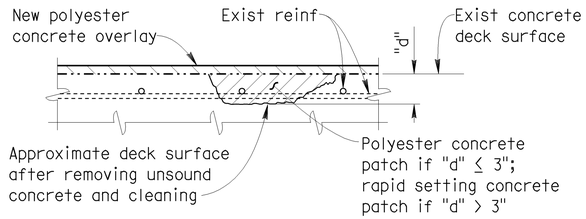

DECK REPAIR DETAIL 1

Note: Reinforcement may be encountered during deck concrete removal. Location will be determined by the Engineer.

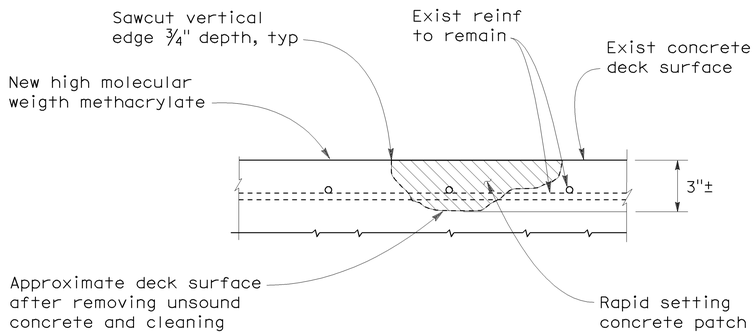

DECK REPAIR DETAIL 2

Note: Reinforcement may be encountered during deck concrete removal

NOTE:

THE CONTRACTOR SHALL VERIFY ALL CONTROLLING FIELD DIMENSIONS BEFORE ORDERING OR FABRICATING ANY MATERIAL.

DECK REPAIR TABLE

BRIDGE LOCATION NO.	BRIDGE NAME	BRIDGE NUMBER	APPROXIMATE AREA DAMAGED (percent)	APPROXIMATE DEPTH DAMAGED (inches)
1	GREEN VALLEY CREEK	23-0004	1	3
3	LEDGEWOOD CREEK	23-0008R	1	3
4	WEST TEXAS STREET UC	23-0106R	1	3
5	ALAMO CREEK	23-0010	1	3
7	ULATIS CREEK	23-0052L	1	3
9	SOUTH FORK PUTAH CREEK	23-0054R	1	3

DECK REPAIR NOTES:

1. For bridge locations, see Title Sheet.
2. Locations of deck repair will be determined by the Engineer.
3. Reinforcement may be encountered during deck unsound concrete removal
4. Existing reinforcement shall be protected in place during unsound concrete removal and patching operations.
5. It is the responsibility of the contractor to repair any reinforcement that is accidentally cut by saw cutting operations.
6. When existing transverse reinforcement is exposed in the deck surface, saw cutting shall be waived with the approval of the Engineer.
7. The saw cut depth shall nut exceed 1 inch or the concrete cover over the top steel reinforcing bars, whichever is less.
8. Remove unsound Portland Cement concrete and unsound concrete patches to expose sound, hard concrete substrate. Replace original deck surface with rapid setting concrete patch.

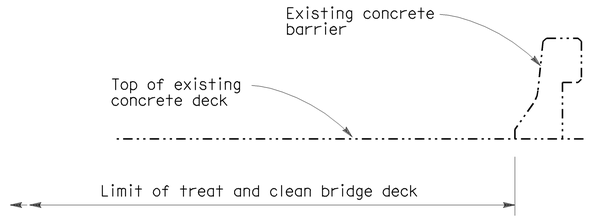

EOD BARRIER

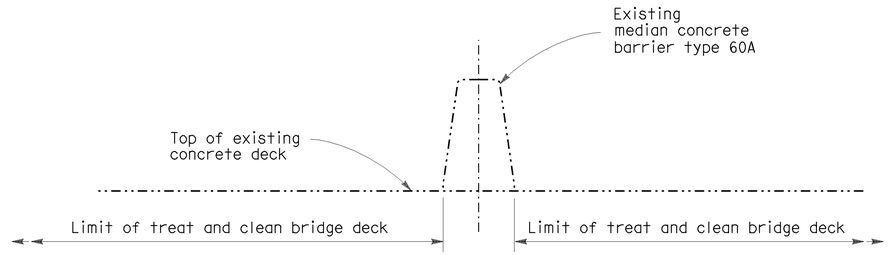

MEDIAN BARRIER

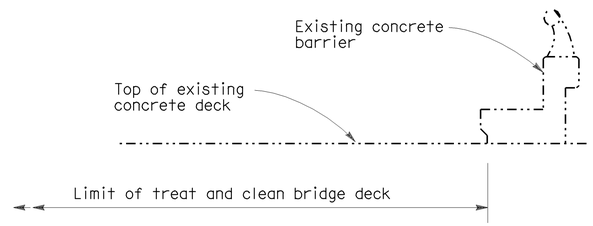

SIDEWALK BARRIER TYPE 2

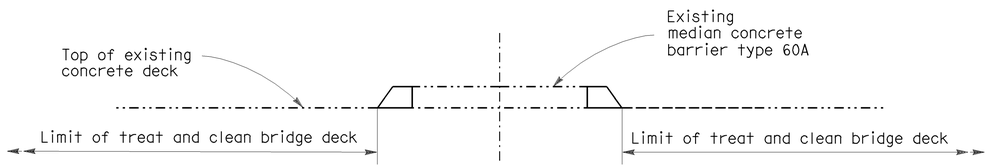

RAISED MEDIAN

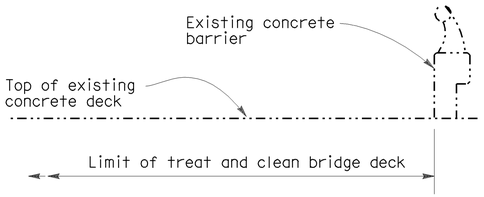

SIDEWALK BARRIER TYPE 1

TYPICAL LIMITS OF DECK WORK

NO SCALE

REPLACE JOINT SEALS, STRUCTURE APPROACH, TREAT BRIDGE DECKS & BRIDGE DECK OVERLAY

DESIGN	BY L. Ellis	CHECKED H. Su	STATE OF CALIFORNIA DEPARTMENT OF TRANSPORTATION	DIVISION OF MAINTENANCE STRUCTURE MAINTENANCE AND INVESTIGATIONS	BRIDGE NO. Various
DETAILS	BY B. Ballesteros	CHECKED L. Ellis			POST MILE Var
QUANTITIES	BY L. Ellis	CHECKED H. Su			

VARIOUS BRIDGES

DECK REPAIR TABLE & DETAILS

STRUCTURES MAINTENANCE DETAIL SHEET (ENGLISH) (REV. 09-01-10)

ORIGINAL SCALE IN INCHES FOR REDUCED PLANS 0 1 2 3

UNIT: 0989 PROJECT NUMBER & PHASE: 0400020051 CONTRACT NO.: 04-2E2601

DISREGARD PRINTS BEARING EARLIER REVISION DATES →

REVISION DATES				SHEET	OF
05-26-11				11	13

FILE => 0400020051ddt01.dgn

USERNAME => s135695 DATE PLOTTED => 17-FEB-2012 TIME PLOTTED => 08:02

DIST	COUNTY	ROUTE	POST MILES TOTAL PROJECT	SHEET No.	TOTAL SHEETS
04	Sol	80, 680	Var	26	27

REGISTERED CIVIL ENGINEER — 8-10-11 DATE

PLANS APPROVAL DATE

REGISTERED PROFESSIONAL ENGINEER — LINA G. ELLIS — No. C65260 — Exp. 9-30-11 — CIVIL — STATE OF CALIFORNIA

The State of California or its officers or agents shall not be responsible for the accuracy or completeness of electronic copies of this plan sheet.

JOINT SEAL TABLE

BRIDGE LOCATION NO.	BRIDGE NUMBER	BRIDGE NAME	LOCATION	Min. "MR" (in)	APPROX. LENGTH (ft)	EXISTING WATERSTOP	APPROX. DEPTH TO CLEAN JOINTS	APPROX . DEPTH X WIDTH X LENGTH OF JOINT SPALLS (in)
①	23-0004	GREEN VALLEY CREEK	Abut 1	½"	168	No	12"	
			Bent 2	½"	168	No	12"	
			Bent 3	½"	168	No	12"	
			Abut 4	½"	168	No	12"	
②	23-0141	ABERNATHY ROAD OC	Abut 1	1-½"	84	Yes	6"	2" x 4" x 8"
			Abut 3	1-½"	84	Yes	6"	2" x 4" x 4"
			App Slab BB	½"	84	Yes	6"	2" x 4" x 4"
			App Slab EB	½"	84	Yes	6"	2" x 4" x 4"
③	23-0008R	LEDGEWOOD CREEK	Abut 1	½"	91	No	12"	
			Abut 5	½"	91	No	12"	2" x 4" x 12"
⑥	23-0051R	MASON STREET UC	Abut 1	1-½"	79	No	12"	
			Abut 5	1-½"	79	No	12"	
⑦	23-0052L	ULATIS CREEK	Abut 1	1-½"	79	No	12"	
			Abut 6	1-½"	79	No	12"	
⑧	23-0148	MIDWAY ROAD OC	Bent 3	1-½"	36	No	12"	
⑨	23-0054R	SOUTH FORK PUTAH CREEK	Hinge 3	1-½"	76	No	12"	
			Hinge 6	1-½"	76	No	12"	
			Hinge 9	1-½"	76	No	12"	
⑩	23-0142R	CORDELIA OH	Abut 1	1-½"	78	No	12"	
			Abut 6	1-½"	78	No	12"	

The following notes apply to JOINT SEAL TYPE A:

Install Type A joint seal 3" up into curb or rail on the low side of the deck where joint matches curb or rail joint. For details not shown see Sheet 11.

The following notes apply to JOINT SEAL TYPE B:

1) Seal must satisfy both minimum Movement Rating (MR) and minimum W1 requirements.
2) Minimum W1 is the calculated maximum width of the joint based on field measurements. After the joints have been cleaned, minimum W1 is to be calculated by the Engineer.
3) W1 shall be the smaller of the values determined as follows:
   A) 0.85 times the manufacturer's designed minimum uncompressed width of the seal.
   B) The width of the seal on the third succesive test cycle of the pressure deflection test, when compressed to an average pressure of 3 psi.
4) Bend Type B joint seal 6" up into curb or rail on the low side of the deck where deck joint matches curb or rail joint.

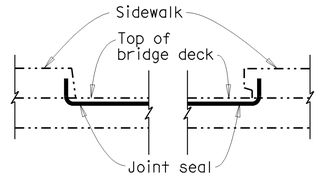

SIDEWALK

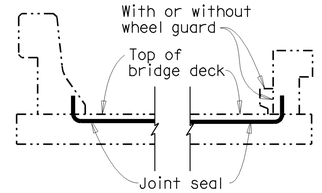

BARRIER RAIL

JOINT SEAL AT LOW SIDE OF DECK

Details shown for illustration purposes only.
For use only where deck joint matches sidewalk, curb or barrier rail joint.
NO SCALE

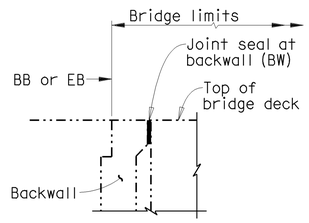

ABUTMENT WITH BACKWALL

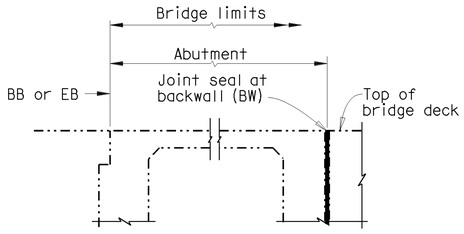

BIN TYPE ABUTMENT

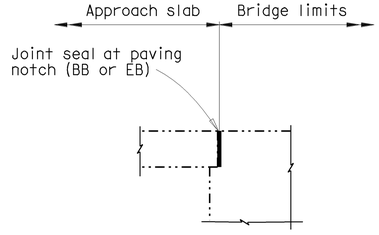

DIAPHRAGM ABUTMENT

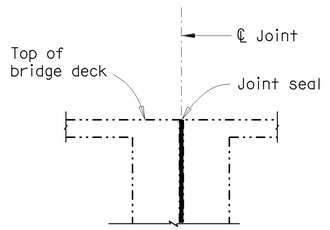

BENT

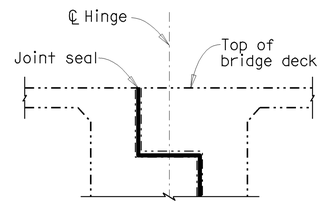

HINGE

JOINT SEAL LOCATION

NO SCALE

NOTE:

THE CONTRACTOR SHALL VERIFY ALL CONTROLLING FIELD DIMENSIONS BEFORE ORDERING OR FABRICATING ANY MATERIAL.

REPLACE JOINT SEALS, STRUCTURE APPROACH, TREAT BRIDGE DECKS & BRIDGE DECK OVERLAY

DESIGN	BY L. Ellis	CHECKED H. Su	STATE OF CALIFORNIA DEPARTMENT OF TRANSPORTATION
DETAILS	BY B. Ballesteros	CHECKED L. Ellis	
QUANTITIES	BY L. Ellis	CHECKED H. Su	

DIVISION OF MAINTENANCE
STRUCTURE MAINTENANCE AND INVESTIGATIONS

BRIDGE NO. Various
POST MILE Var

VARIOUS BRIDGES

JOINT SEAL TABLE & DETAILS

STRUCTURES MAINTENANCE DETAIL SHEET (ENGLISH) (REV. 09-01-10)

ORIGINAL SCALE IN INCHES FOR REDUCED PLANS 0 1 2 3

UNIT: 0989
PROJECT NUMBER & PHASE: 0400020051
CONTRACT NO.: 04-2E2601

DISREGARD PRINTS BEARING EARLIER REVISION DATES →

REVISION DATES				SHEET	OF
05-26-11	07-21-11			12	13

FILE => 0400020051ddt02.dgn

USERNAME => s135695 DATE PLOTTED => 17-FEB-2012 TIME PLOTTED => 08:02

DIST.	COUNTY	ROUTE	MILE POST TOTAL PROJECT	SHEET NO.	TOTAL SHEETS
04	Sol	80, 680	Var	27	27

8-10-11
REGISTERED ENGINEER - CIVIL

9-6-11
PLANS APPROVAL DATE

The State of California or its officers or agents shall not be responsible for the accuracy or completeness of electronic copies of this plan sheet.

REGISTERED PROFESSIONAL ENGINEER
LINA G. ELLIS
No. C65260
Exp. 9-30-11
CIVIL
STATE OF CALIFORNIA

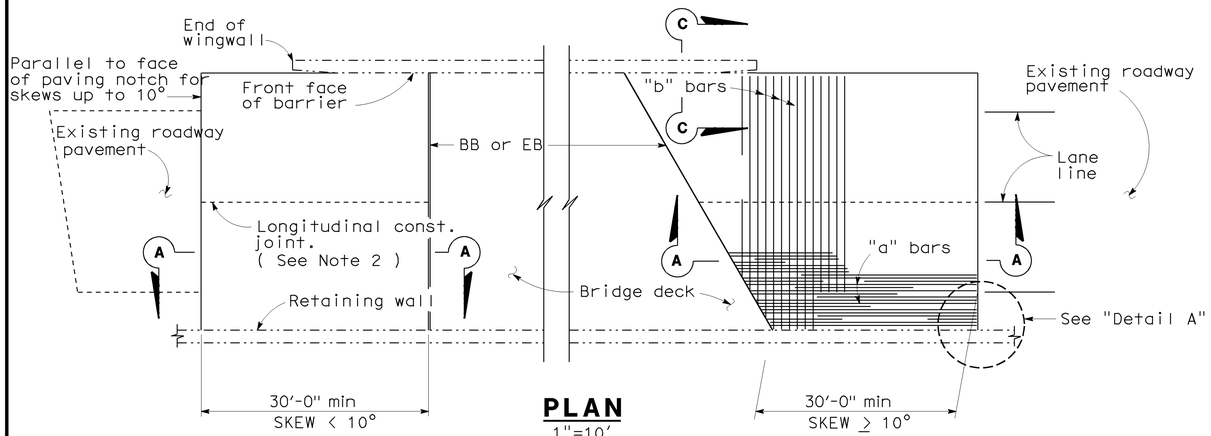

PLAN
1"=10'

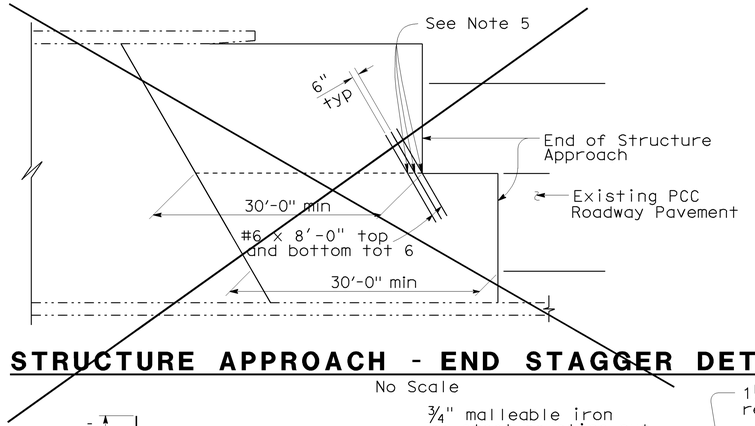

STRUCTURE APPROACH - END STAGGER DETAIL
No Scale

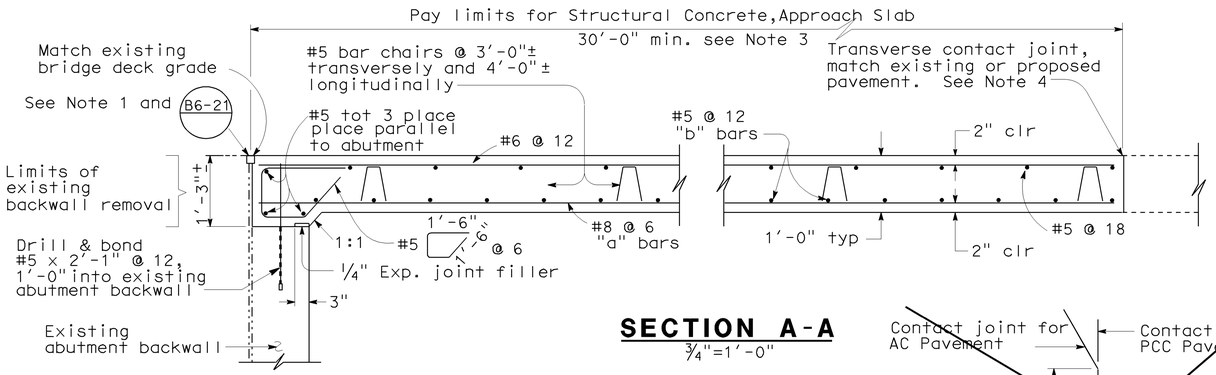

SECTION A-A
¾"=1'-0"

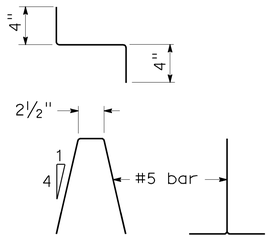

BAR CHAIR DETAIL
1½"=1'-0"

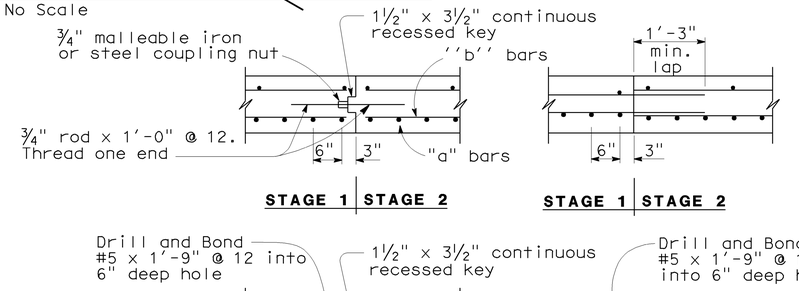

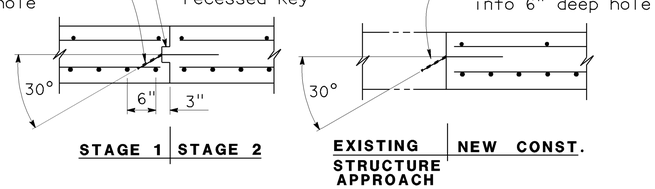

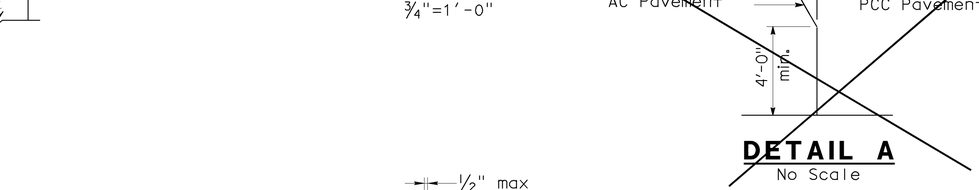

DETAIL A
No Scale

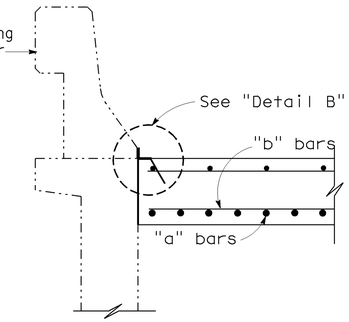

SECTION C-C
¾"=1'-0"

LONGITUDINAL CONSTRUCTION JOINT ALTERNATIVES
¾"=1'-0"

NOTES:

1. Sealed joint,for M.R.see Structure Plans. Adjust bar reinforcement to clear a sawcut for sealed joint,when required.
2. Longitudinal construction joints,when permitted by Engineer,shall be located on lane lines.
3. Transverse contact joint shall be a minimum of 5'-0" from an existing or constructed weakened plane joint.
4. For transverse contact joint with new PCC paving, refer to Standard Plan P10.
5. Couplers are required for stage construction.
6. End angle or plate at beginning of barrier transition, end of wingwall or end of structure approach as applicable.

NOTE:
THE CONTRACTOR SHALL VERIFY ALL CONTROLLING FIELD DIMENSIONS BEFORE ORDERING OR FABRICATING ANY MATERIAL.

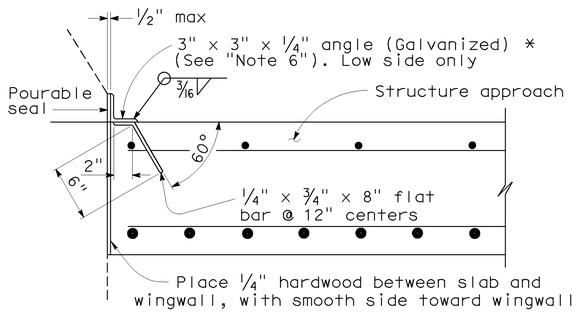

*(TO BE USED WITH TYPE 25 OR TYPE 27 CONCRETE BARRIER)

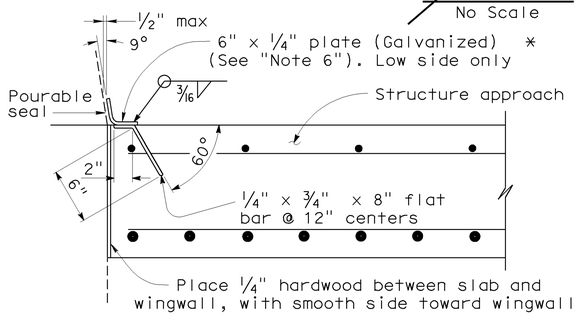

*(TO BE USED WITH TYPE 732 OR TYPE 736 CONCRETE BARRIER)

DETAIL B
1½"=1'-0"

APPROACH SLAB TRANSVERSE CONTACT JOINT		
APPROACH SKEW	WITH AC ROADWAY PAVEMENT	WITH PCC ROADWAY PAVEMENT
< 10°	Parallel to face of paving notch	Parallel to face of paving notch
10°- 45°	Parallel to face of P N use (Detail A)	Stagger lines 24' to 36' apart
> 45°	Parallel to face of P N use (Detail A)	Stagger at each lane line

REPLACE JOINT SEALS, STRUCTURE APPROACH, TREAT BRIDGE DECKS & BRIDGE DECK OVERLAY

GREEN VALLEY CREEK AND CORDELIA OH

STRUCTURE APPROACH TYPE R(30S)

STANDARD DRAWING

RELEASE DATE		BY	CHECKED	RELEASED BY
3/14/05	DESIGN	M.TRAFFALIS	E.THORKILDSEN	
FILE NO. xs3-130e	DETAILS	R.YEE	E.THORKILDSEN	
	SUBMITTED	M.HA	DRAWING DATE 8/92	OFFICE CHIEF

STATE OF CALIFORNIA
DEPARTMENT OF TRANSPORTATION

DIVISION OF MAINTENANCE
STRUCTURE MAINTENANCE AND INVESTIGATIONS

BRIDGE NO. Various
MILE POST Var

UNIT: 0989
PROJECT NUMBER & PHASE: 0400020051

DISREGARD PRINTS BEARING EARLIER REVISION DATES →

REVISION DATES (PRELIMINARY STAGE ONLY)

SHEET 13 OF 13

DS OSD 2147A (ENGLISH) (REV. X/XX/XX)

ORIGINAL SCALE IN INCHES FOR REDUCED PLANS 0 1 2 3

DATE PLOTTED => 16-AUG-2011 TIME PLOTTED => 12:35

USERNAME => s135695

0400020051ss1b.dgn