Dist	COUNTY	ROUTE	POST MILES TOTAL PROJECT	SHEET No.	TOTAL SHEETS
04	Son	1	16.1/19.7	1	26

INDEX OF PLANS

SHEET No.	DESCRIPTION
1	TITLE SHEET
2 - 5	TYPICAL CROSS SECTIONS
6	CONSTRUCTION DETAILS
7 - 8	EROSION CONTROL PLANS
9 - 16	DRAINAGE PLAN, PROFILES, DETAILS AND QUANTITIES
17	CONSTRUCTION AREA SIGNS
18	SUMMARY OF QUANTITIES
19 - 26	REVISED AND NEW STANDARD PLANS

THE STANDARD PLANS LIST APPLICABLE TO THIS CONTRACT IS INCLUDED IN THE NOTICE TO BIDDERS AND SPECIAL PROVISIONS BOOK.

STATE OF CALIFORNIA

DEPARTMENT OF TRANSPORTATION

PROJECT PLANS FOR CONSTRUCTION ON

STATE HIGHWAY

IN SONOMA COUNTY
NEAR JENNER
FROM 0.8 MILE NORTH OF SCOTTY CREEK BRIDGE
TO RUSSIAN RIVER BRIDGE

TO BE SUPPLEMENTED BY STANDARD PLANS DATED MAY 2006

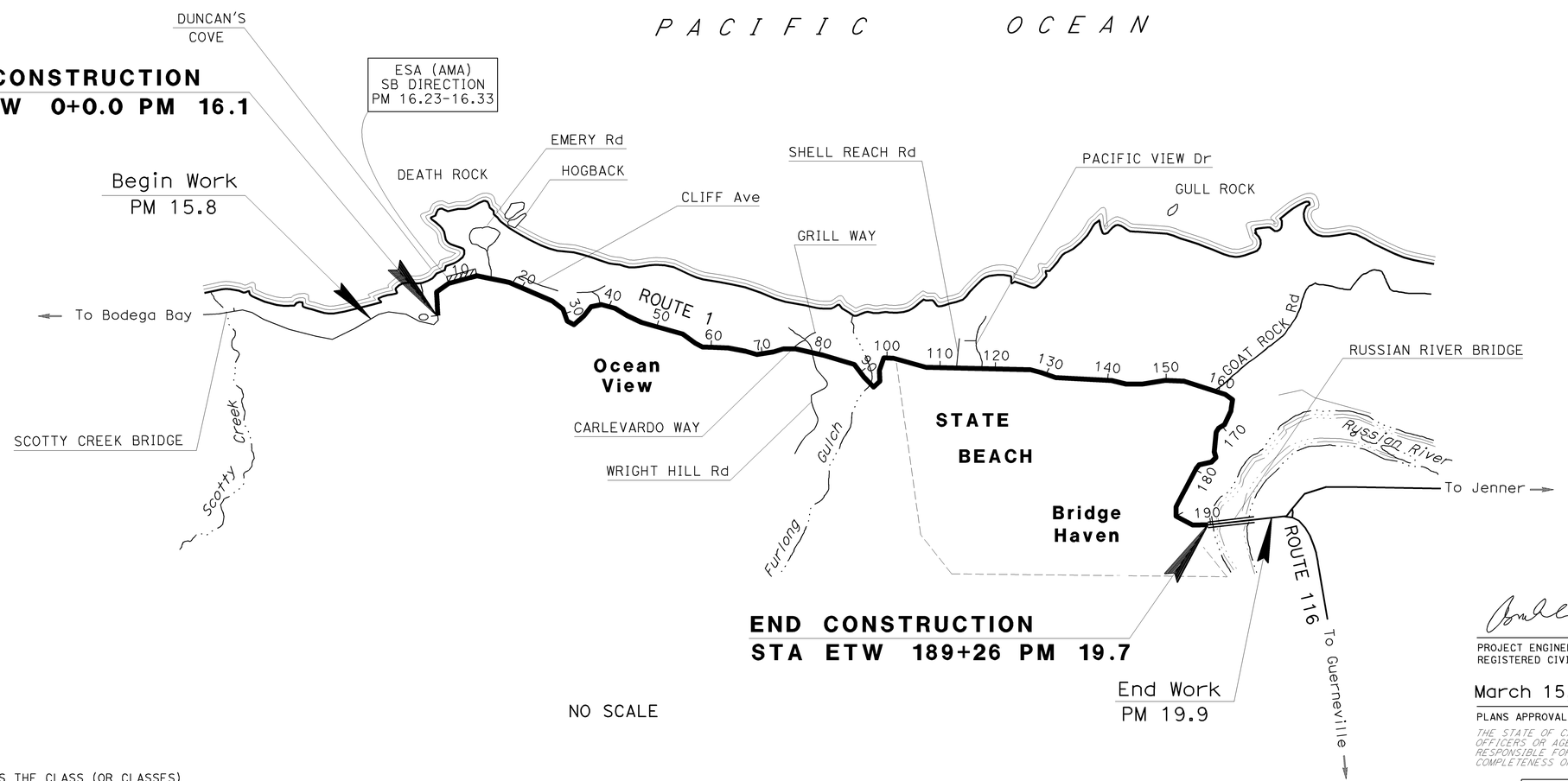

PACIFIC OCEAN

THE CONTRACTOR SHALL POSSESS THE CLASS (OR CLASSES) OF LICENSE AS SPECIFIED IN THE "NOTICE TO BIDDERS."

PROJECT MANAGER: RAMSES SARGISS

DESIGN ENGINEER: VIJITH THILAKARATNE

1-29-10
PROJECT ENGINEER
REGISTERED CIVIL ENGINEER
DATE

March 15, 2010
PLANS APPROVAL DATE

REGISTERED PROFESSIONAL ENGINEER
Binh V. Hong
No. 63850
Exp. 9-30-10
CIVIL
STATE OF CALIFORNIA

THE STATE OF CALIFORNIA OR ITS OFFICERS OR AGENTS SHALL NOT BE RESPONSIBLE FOR THE ACCURACY OR COMPLETENESS OF SCANNED COPIES OF THIS PLAN SHEET.

LAST REVISION 03-08-10
DATE PLOTTED => 13-MAR-2010
TIME PLOTTED => 07:41

CONTRACT No. 04-2A6304

BORDER LAST REVISED 8/1/2008 | CALTRANS WEB SITE IS: HTTP//WWW.DOT.CA.GOV/ | RELATIVE BORDER SCALE IS IN INCHES 0 1 2 3 | USERNAME => s128787 DGN FILE => 42a630ab001.dgn | CU 04609 | EA 2A6301

Dist	COUNTY	ROUTE	POST MILES TOTAL PROJECT	SHEET No.	TOTAL SHEETS
04	Son	1	16.1/19.7	3	26

1-29-10
REGISTERED CIVIL ENGINEER DATE

3-15-10
PLANS APPROVAL DATE

REGISTERED PROFESSIONAL ENGINEER
Binh V. Hong
No. 63850
Exp. 9-30-10
CIVIL
STATE OF CALIFORNIA

THE STATE OF CALIFORNIA OR ITS OFFICERS OR AGENTS SHALL NOT BE RESPONSIBLE FOR THE ACCURACY OR COMPLETENESS OF SCANNED COPIES OF THIS PLAN SHEET.

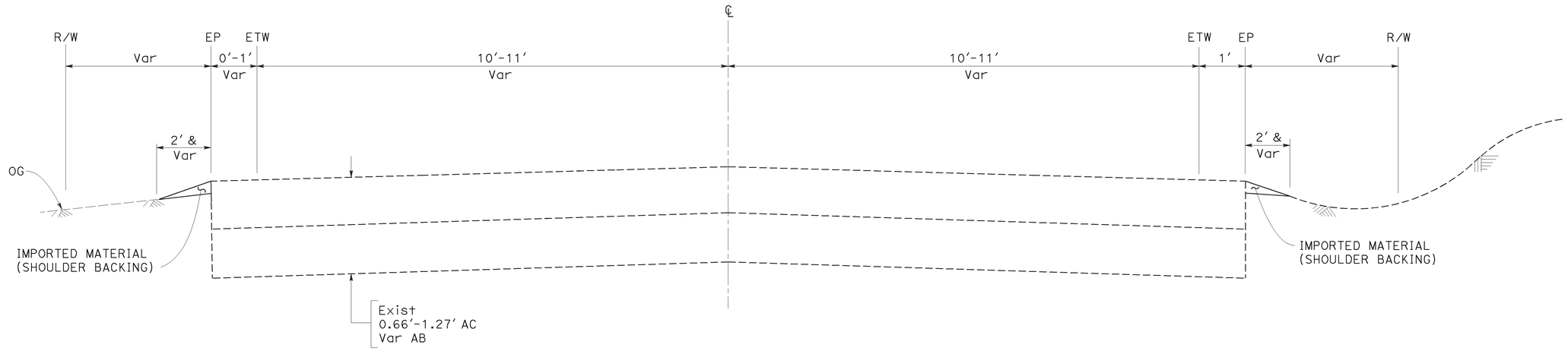

SOUTHBOUND NORTHBOUND

Sta ETW 13+53 TO 44+50
Sta ETW 50+00 TO 176+25
Sta ETW 179+50 TO 189+26

ROUTE 1

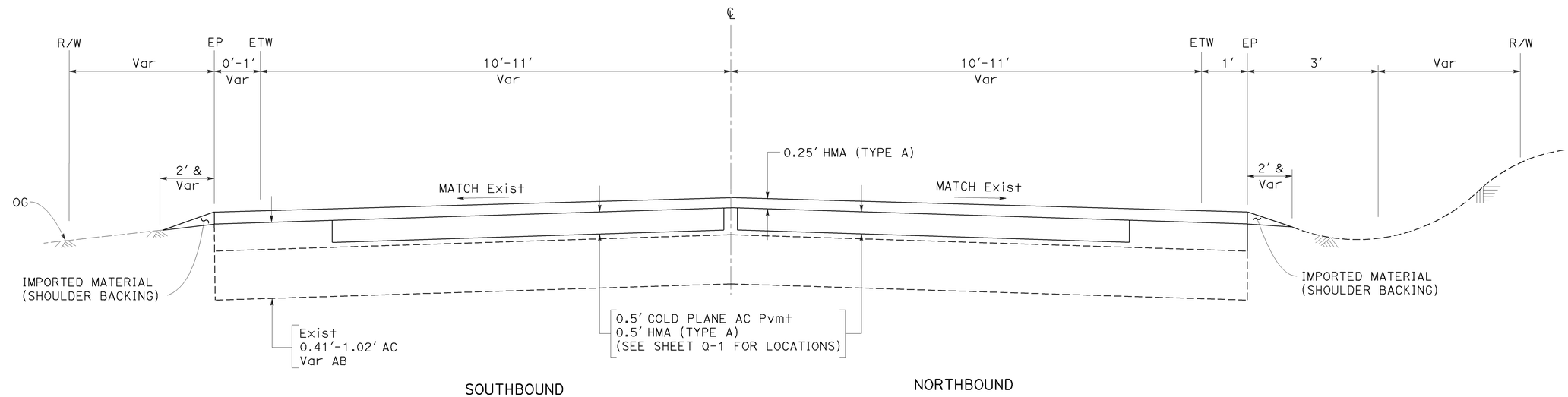

SOUTHBOUND NORTHBOUND

Sta ETW 10+07 TO 10+75

ROUTE 1

TYPICAL CROSS SECTIONS

NO SCALE

FOR NOTES SEE SHEET X-1

X-2

REVISED BY	DATE REVISED
BH	12/17/09

CALCULATED-DESIGNED BY: BINH V. HONG
CHECKED BY: JOSE B. LAU
FUNCTIONAL SUPERVISOR: VIJITH THILAKARATNE

STATE OF CALIFORNIA - DEPARTMENT OF TRANSPORTATION
DESIGN

LAST REVISION | DATE PLOTTED => 18-MAR-2010
03-08-10 | TIME PLOTTED => 11:10

Dist	COUNTY	ROUTE	POST MILES TOTAL PROJECT	SHEET No.	TOTAL SHEETS
04	Son	1	16.1/19.7	4	26

REGISTERED CIVIL ENGINEER 1-29-10 DATE

3-15-10
PLANS APPROVAL DATE

REGISTERED PROFESSIONAL ENGINEER
Binh V. Hong
No. 63850
Exp. 9-30-10
CIVIL
STATE OF CALIFORNIA

THE STATE OF CALIFORNIA OR ITS OFFICERS OR AGENTS SHALL NOT BE RESPONSIBLE FOR THE ACCURACY OR COMPLETENESS OF SCANNED COPIES OF THIS PLAN SHEET.

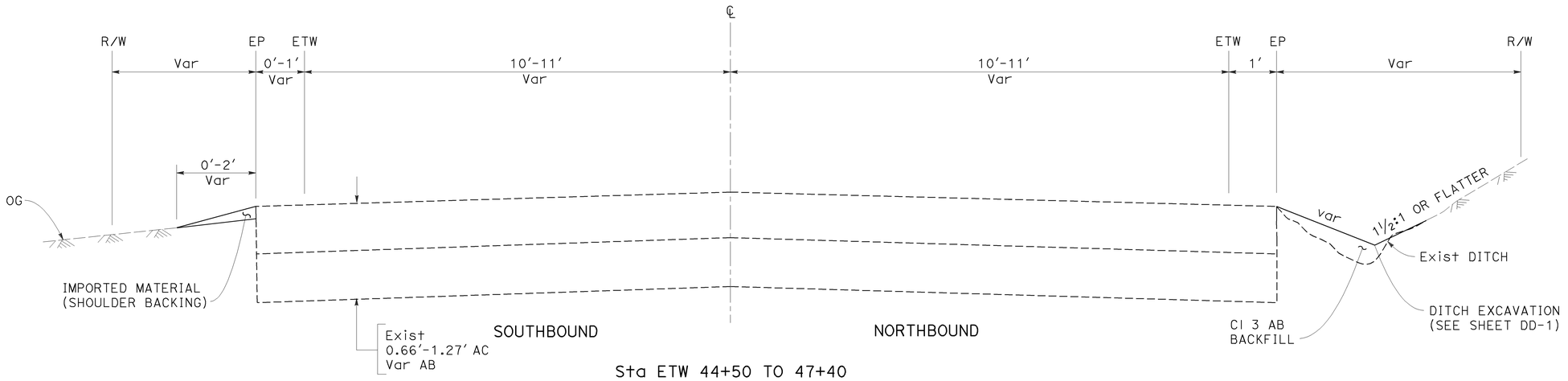

Sta ETW 44+50 TO 47+40
ROUTE 1

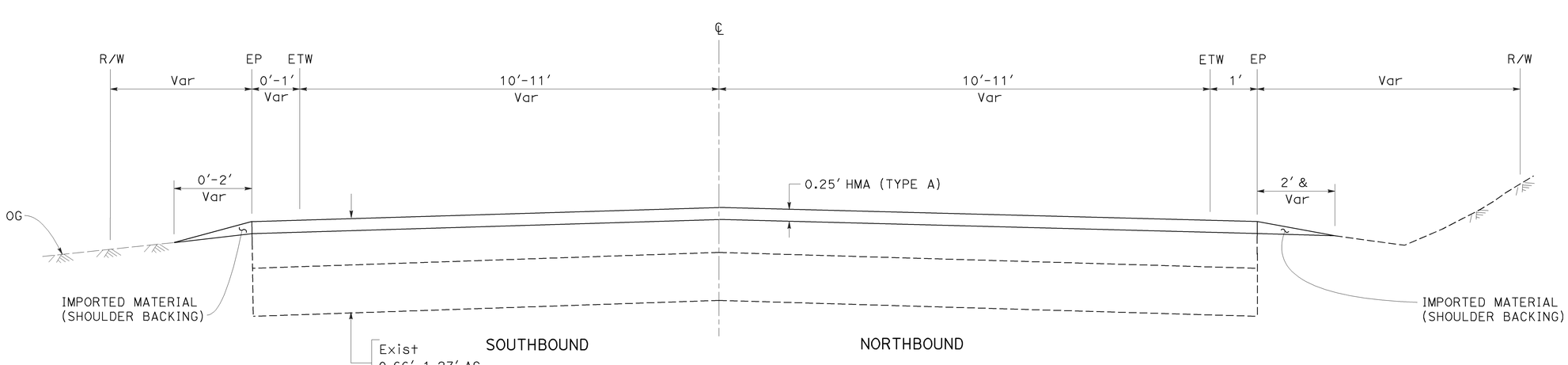

Sta ETW 10+75 TO 13+53
ROUTE 1

TYPICAL CROSS SECTIONS
NO SCALE

FOR NOTES SEE SHEET X-1

X-3

STATE OF CALIFORNIA - DEPARTMENT OF TRANSPORTATION
Caltrans
DESIGN

FUNCTIONAL SUPERVISOR: VIJITH THILAKARATNE
CALCULATED-DESIGNED BY: BINH V. HONG
CHECKED BY: JOSE B. LAU
REVISED BY: BH
DATE REVISED: 12/17/09

LAST REVISION 03-08-10
DATE PLOTTED => 18-MAR-2010
TIME PLOTTED => 11:11

Dist	COUNTY	ROUTE	POST MILES TOTAL PROJECT	SHEET No.	TOTAL SHEETS
04	Son	1	16.1/19.7	4	26

REGISTERED CIVIL ENGINEER — 1-29-10 DATE

3-15-10
PLANS APPROVAL DATE

REGISTERED PROFESSIONAL ENGINEER
Binh V. Hong
No. 63850
Exp 9-30-10
CIVIL
STATE OF CALIFORNIA

THE STATE OF CALIFORNIA OR ITS OFFICERS OR AGENTS SHALL NOT BE RESPONSIBLE FOR THE ACCURACY OR COMPLETENESS OF SCANNED COPIES OF THIS PLAN SHEET.

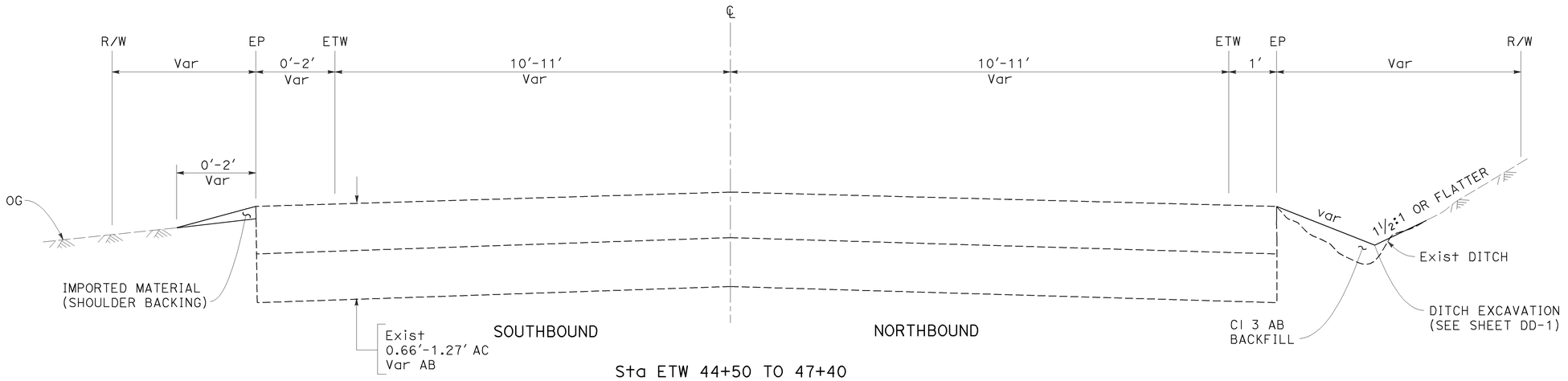

Sta ETW 44+50 TO 47+40
ROUTE 1

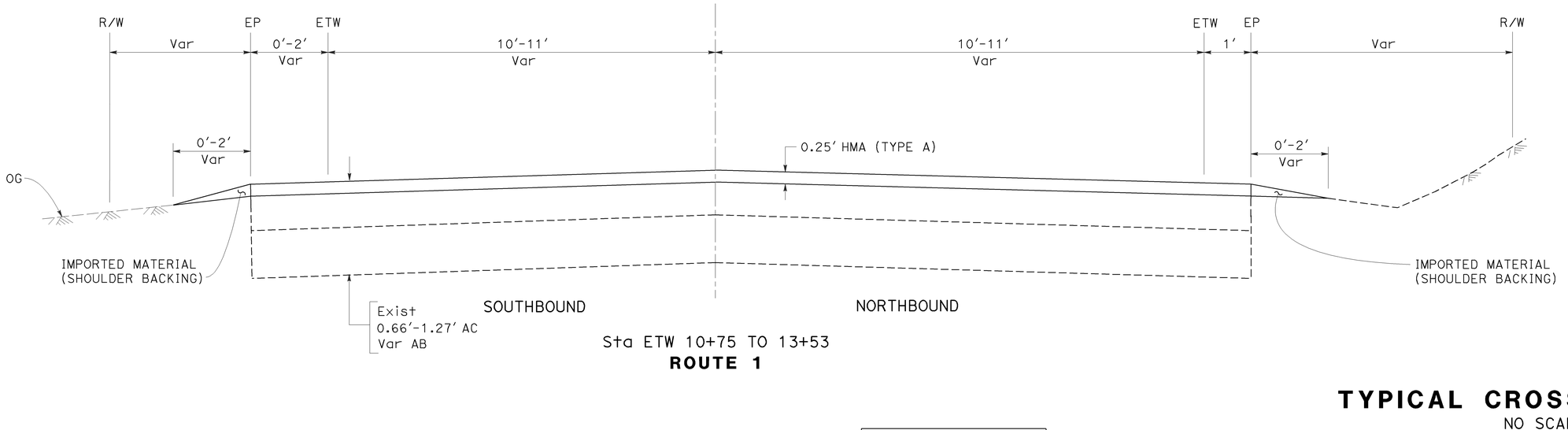

Sta ETW 10+75 TO 13+53
ROUTE 1

TYPICAL CROSS SECTIONS

NO SCALE

FOR NOTES SEE SHEET X-1

X-3

CALCULATED-DESIGNED BY	CHECKED BY	REVISED BY	DATE REVISED
BINH V. HONG	JOSE B. LAU	BH	12/17/09

FUNCTIONAL SUPERVISOR: VIJITH THILAKARATNE

STATE OF CALIFORNIA - DEPARTMENT OF TRANSPORTATION
DESIGN

LAST REVISION | DATE PLOTTED => 13-MAR-2010 | TIME PLOTTED => 07:44
03-08-10

BORDER LAST REVISED 4/11/2008

RELATIVE BORDER SCALE IS IN INCHES 0 1 2 3

USERNAME => s128787
DGN FILE => 42a630ca003.dgn

CU 04609

EA 2A6301

Dist	COUNTY	ROUTE	POST MILES TOTAL PROJECT	SHEET No.	TOTAL SHEETS
04	Son	1	16.1/19.7	5	26

REGISTERED CIVIL ENGINEER — 1-29-10 DATE

3-15-10
PLANS APPROVAL DATE

REGISTERED PROFESSIONAL ENGINEER
Binh V. Hong
No. 63850
Exp. 9-30-10
CIVIL
STATE OF CALIFORNIA

THE STATE OF CALIFORNIA OR ITS OFFICERS OR AGENTS SHALL NOT BE RESPONSIBLE FOR THE ACCURACY OR COMPLETENESS OF SCANNED COPIES OF THIS PLAN SHEET.

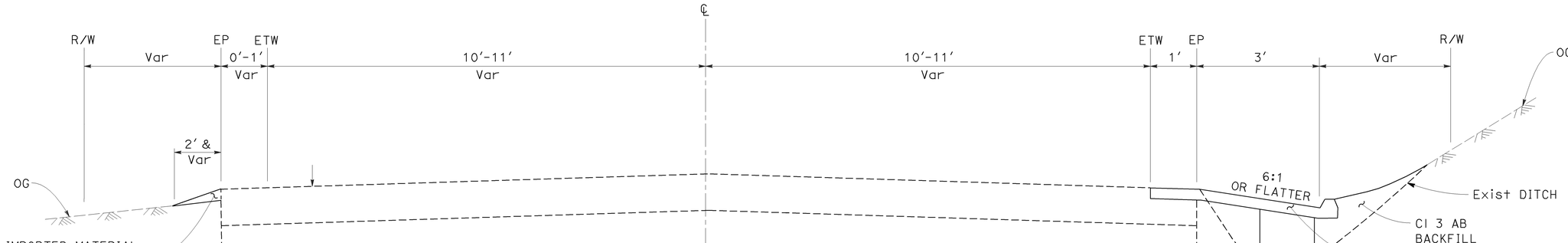

Sta ETW 176+25 TO 179+45

ROUTE 1

TYPICAL CROSS SECTIONS

NO SCALE

FOR NOTES SEE SHEET X-1

X-4

CALCULATED-DESIGNED BY	REVISED BY	
CHECKED BY	DATE REVISED	
BINH V. HONG	BH	
JOSE B. LAU	12/17/09	

FUNCTIONAL SUPERVISOR: VIJITH THILAKARATNE

STATE OF CALIFORNIA - DEPARTMENT OF TRANSPORTATION
DESIGN

Caltrans®

LAST REVISION: DATE PLOTTED => 13-MAR-2010
03-08-10 TIME PLOTTED => 07:44

BORDER LAST REVISED 4/11/2008

RELATIVE BORDER SCALE IS IN INCHES 0 1 2 3

USERNAME => s128787
DGN FILE => 42a630ca004.dgn

CU 04609

EA 2A6301

Dist	COUNTY	ROUTE	POST MILES TOTAL PROJECT	SHEET No.	TOTAL SHEETS
04	Son	1	16.1/19.7	6	26

REGISTERED CIVIL ENGINEER 1-29-10 DATE

3-15-10
PLANS APPROVAL DATE

REGISTERED PROFESSIONAL ENGINEER Binh V. Hong No. 63850 Exp. 9-30-10 CIVIL STATE OF CALIFORNIA

THE STATE OF CALIFORNIA OR ITS OFFICERS OR AGENTS SHALL NOT BE RESPONSIBLE FOR THE ACCURACY OR COMPLETENESS OF SCANNED COPIES OF THIS PLAN SHEET.

LEGEND:

HMA (TYPE A) SURFACING

AC CONFORM

NOTES:

1. PAVING CONFORM AT BEGIN & END CONSTRUCTION AND AT INTERSECTION.
2. 10' AT INTERSECTION AND 20' ON MAINLINE.

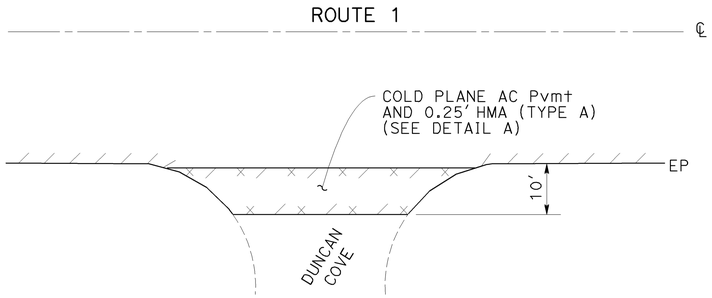

PM 16.2

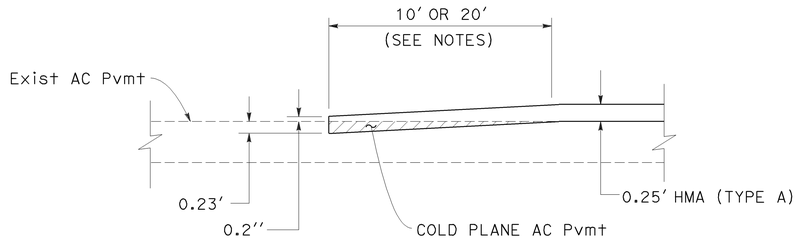

DETAIL A

CONSTRUCTION DETAILS

NO SCALE

C-1

STATE OF CALIFORNIA - DEPARTMENT OF TRANSPORTATION
Caltrans DESIGN

FUNCTIONAL SUPERVISOR: VIJITH THILAKARATNE
CALCULATED-DESIGNED BY: BINH V. HONG
CHECKED BY: JOSE B. LAU
REVISED BY: BH
DATE REVISED: 12/17/09

LAST REVISION 03-03-10
DATE PLOTTED => 13-MAR-2010
TIME PLOTTED => 07:45

Dist	COUNTY	ROUTE	POST MILES TOTAL PROJECT	SHEET No.	TOTAL SHEETS
04	Son	1	16.1/19.7	7	26

LICENSED LANDSCAPE ARCHITECT

3-15-10
PLANS APPROVAL DATE

LICENSED LANDSCAPE ARCHITECT
Name & License No.
Signature
11-30-11
Renewal Date
Date
STATE OF CALIFORNIA

THE STATE OF CALIFORNIA OR ITS OFFICERS OR AGENTS SHALL NOT BE RESPONSIBLE FOR THE ACCURACY OR COMPLETENESS OF SCANNED COPIES OF THIS PLAN SHEET.

FOR COMPLETE RIGHT OF WAY
AND ACCURATE ACCESS DATA,
SEE RIGHT OF WAY RECORD MAPS
AT DISTRICT OFFICE.

LEGEND:

EROSION CONTROL (HYDROSEED)

FIBER ROLLS

ROLLED EROSION CONTROL PRODUCT (NETTING)&
EROSION CONTROL (HYDROSEED)

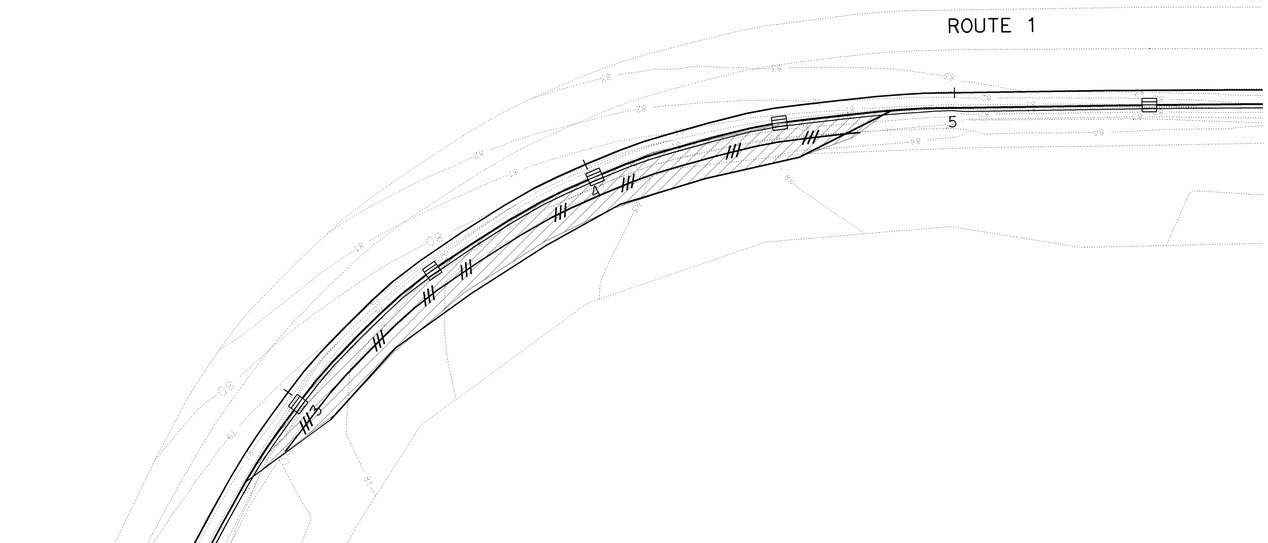

EROSION CONTROL PLAN

SCALE: 1'' = 20'

EC-1

THE PLAN ACCURATE FOR EROSION CONTROL WORK ONLY.

REVISED BY	DATE REVISED

CALIE TSUI
CALCULATED-DESIGNED BY

DAVID YAM
CHECKED BY

DAVID YAM
SENIOR LANDSCAPE ARCHITECT

STATE OF CALIFORNIA - DEPARTMENT OF TRANSPORTATION
Caltrans®
WATER QUALITY

LAST REVISION
02-22-10

DATE PLOTTED => 13-MAR-2010
TIME PLOTTED => 07:46

BORDER LAST REVISED 4/11/2008

RELATIVE BORDER SCALE IS IN INCHES
0 1 2 3

USERNAME => s128787
DGN FILE => 42a630ge001.dgn

CU 04343

EA 2A6301

Dist	COUNTY	ROUTE	POST MILES TOTAL PROJECT	SHEET No.	TOTAL SHEETS
04	Son	1	16.1/19.7	8	26

LICENSED LANDSCAPE ARCHITECT

3-15-10
PLANS APPROVAL DATE

LICENSED LANDSCAPE ARCHITECT — Name & License No. — Expires 11-30-11 Renewal Date — Date — STATE OF CALIFORNIA

THE STATE OF CALIFORNIA OR ITS OFFICERS OR AGENTS SHALL NOT BE RESPONSIBLE FOR THE ACCURACY OR COMPLETENESS OF SCANNED COPIES OF THIS PLAN SHEET.

FOR COMPLETE RIGHT OF WAY
AND ACCURATE ACCESS DATA,
SEE RIGHT OF WAY RECORD MAPS
AT DISTRICT OFFICE.

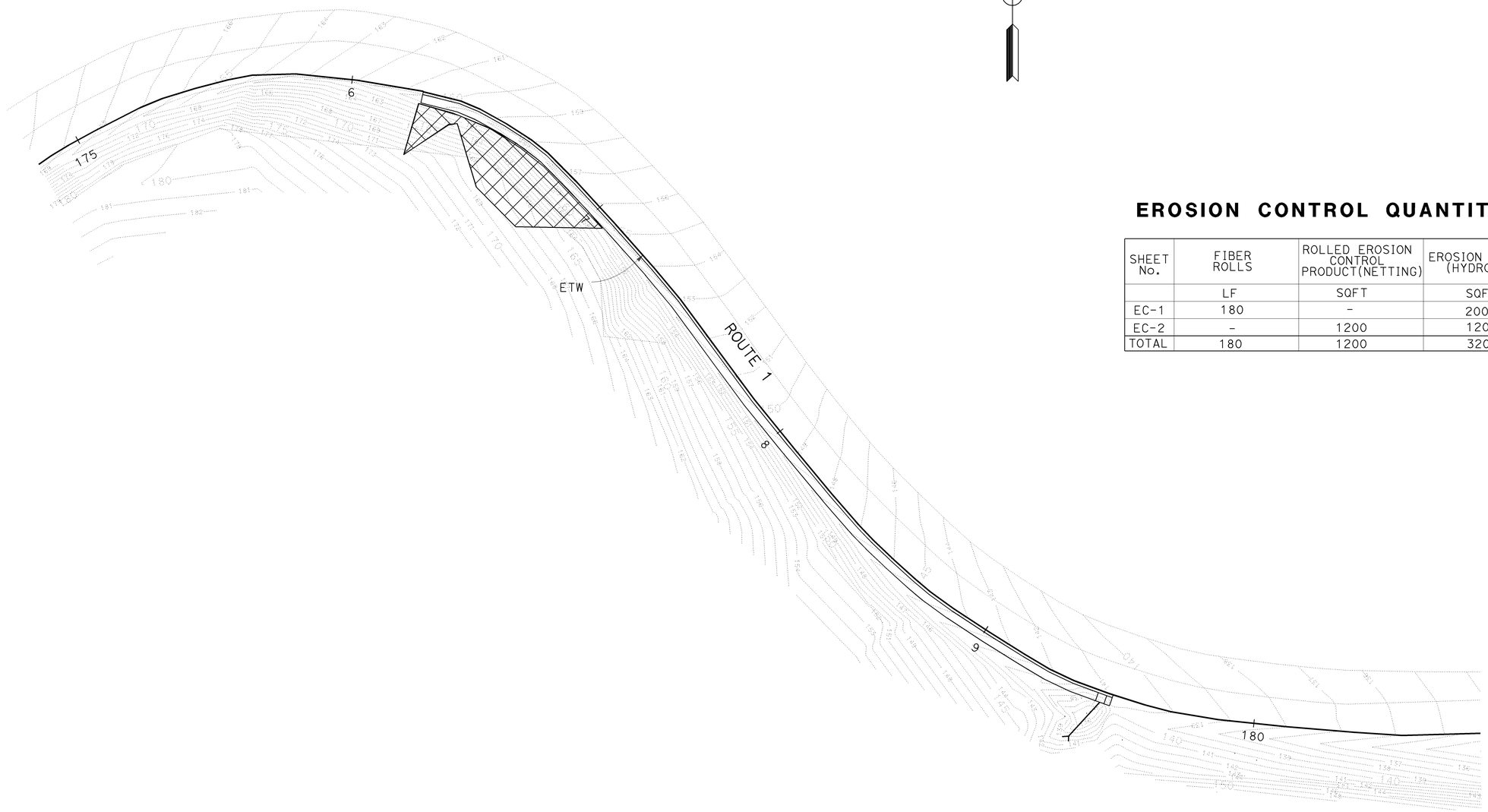

EROSION CONTROL QUANTITIES

SHEET No.	FIBER ROLLS	ROLLED EROSION CONTROL PRODUCT(NETTING)	EROSION CONTROL (HYDROSEED)
	LF	SQFT	SQFT
EC-1	180	-	2000
EC-2	-	1200	1200
TOTAL	180	1200	3200

EROSION CONTROL PLAN

SCALE: 1'' = 20'

EC-2

THE PLAN ACCURATE FOR EROSION CONTROL WORK ONLY.

CALCULATED-DESIGNED BY: CALIE TSUI
CHECKED BY: DAVID YAM
REVISED BY
DATE REVISED

SENIOR LANDSCAPE ARCHITECT: DAVID YAM

STATE OF CALIFORNIA - DEPARTMENT OF TRANSPORTATION
Caltrans® WATER QUALITY

LAST REVISION: DATE PLOTTED => 13-MAR-2010
03-09-10 TIME PLOTTED => 07:46

BORDER LAST REVISED 4/11/2008

RELATIVE BORDER SCALE IS IN INCHES 0 1 2 3

USERNAME => s128787
DGN FILE => 42a630ge002.dgn

CU 04343

EA 2A6301

Dist	COUNTY	ROUTE	POST MILES TOTAL PROJECT	SHEET No.	TOTAL SHEETS
04	Son	1	16.1/19.7	9	26

1-29-10
REGISTERED CIVIL ENGINEER DATE

3-15-10
PLANS APPROVAL DATE

REGISTERED PROFESSIONAL ENGINEER
Binh V. Hong
No. 63850
Exp. 9-30-10
CIVIL
STATE OF CALIFORNIA

THE STATE OF CALIFORNIA OR ITS OFFICERS OR AGENTS SHALL NOT BE RESPONSIBLE FOR THE ACCURACY OR COMPLETENESS OF SCANNED COPIES OF THIS PLAN SHEET.

LEGEND:

(No.) DRAINAGE SYSTEM NUMBER

(XX) DRAINAGE ITEM

NOTE:

1. FOR ACCURATE RIGHT OF WAY DATA, SEE RIGHT OF WAY RECORD MAPS AT THE DISTRICT OFFICE.

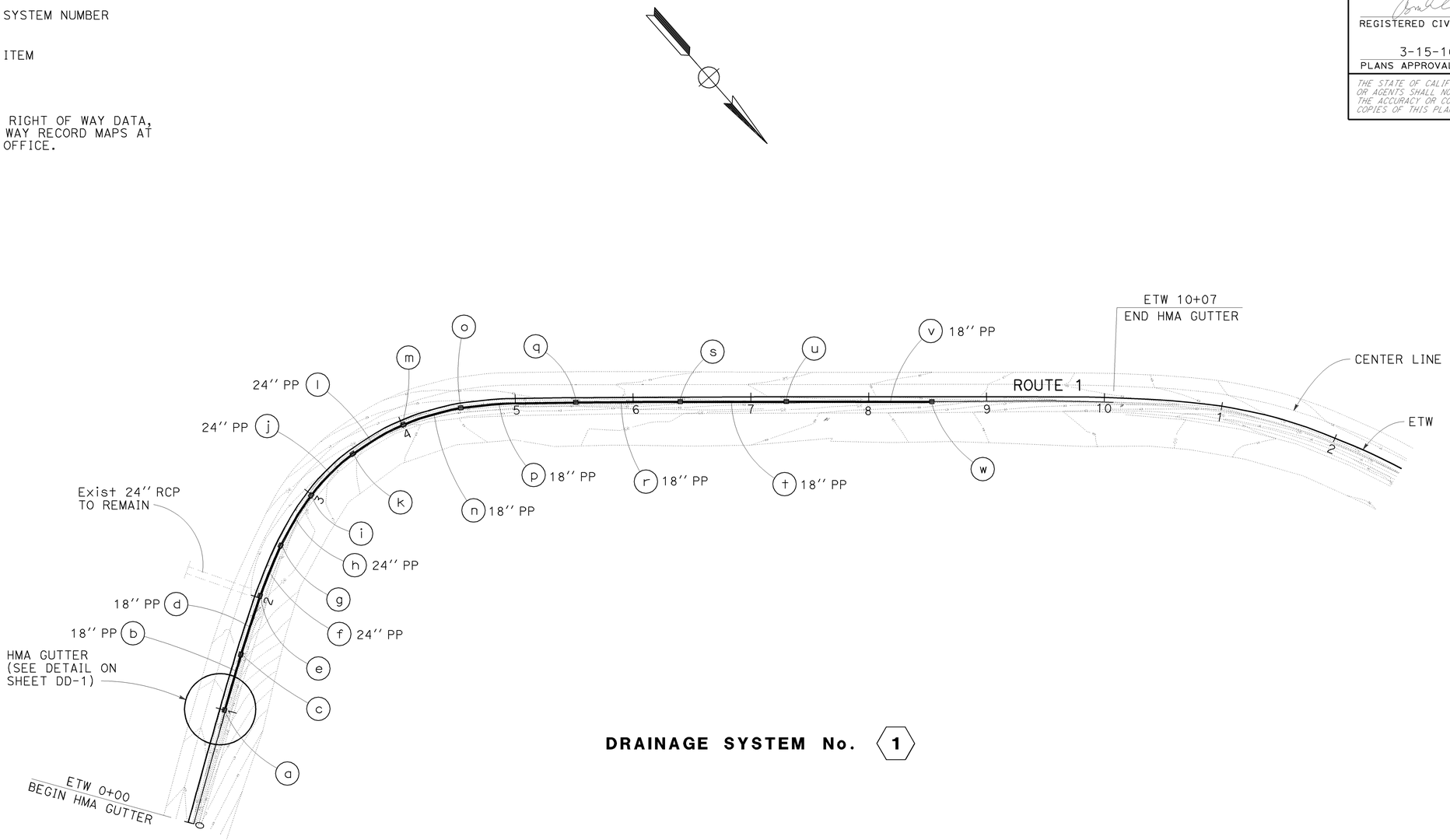

DRAINAGE SYSTEM No. 1

DRAINAGE PLAN

SCALE: 1'' = 50'

THIS PLAN ACCURATE FOR DRAINAGE WORK ONLY

D-1

CALCULATED-DESIGNED BY	CHECKED BY	REVISED BY	DATE REVISED
BINH V. HONG	JOSE B. LAU	BH	12/17/09

FUNCTIONAL SUPERVISOR: VIJITH THILAKARATNE

STATE OF CALIFORNIA - DEPARTMENT OF TRANSPORTATION
Caltrans®
DESIGN

LAST REVISION DATE PLOTTED => 13-MAR-2010
TIME PLOTTED => 07:47
03-08-10

BORDER LAST REVISED 4/11/2008

RELATIVE BORDER SCALE IS IN INCHES 0 1 2 3

USERNAME => s128787
DGN FILE => 42a6301a001.dgn

CU 04609

EA 2A6301

Dist	COUNTY	ROUTE	POST MILES TOTAL PROJECT	SHEET No.	TOTAL SHEETS
04	Son	1	16.1/19.7	10	26

REGISTERED CIVIL ENGINEER — 1-29-10 DATE

3-15-10
PLANS APPROVAL DATE

REGISTERED PROFESSIONAL ENGINEER
Binh V. Hong
No. 63850
Exp 9-30-10
CIVIL
STATE OF CALIFORNIA

THE STATE OF CALIFORNIA OR ITS OFFICERS OR AGENTS SHALL NOT BE RESPONSIBLE FOR THE ACCURACY OR COMPLETENESS OF SCANNED COPIES OF THIS PLAN SHEET.

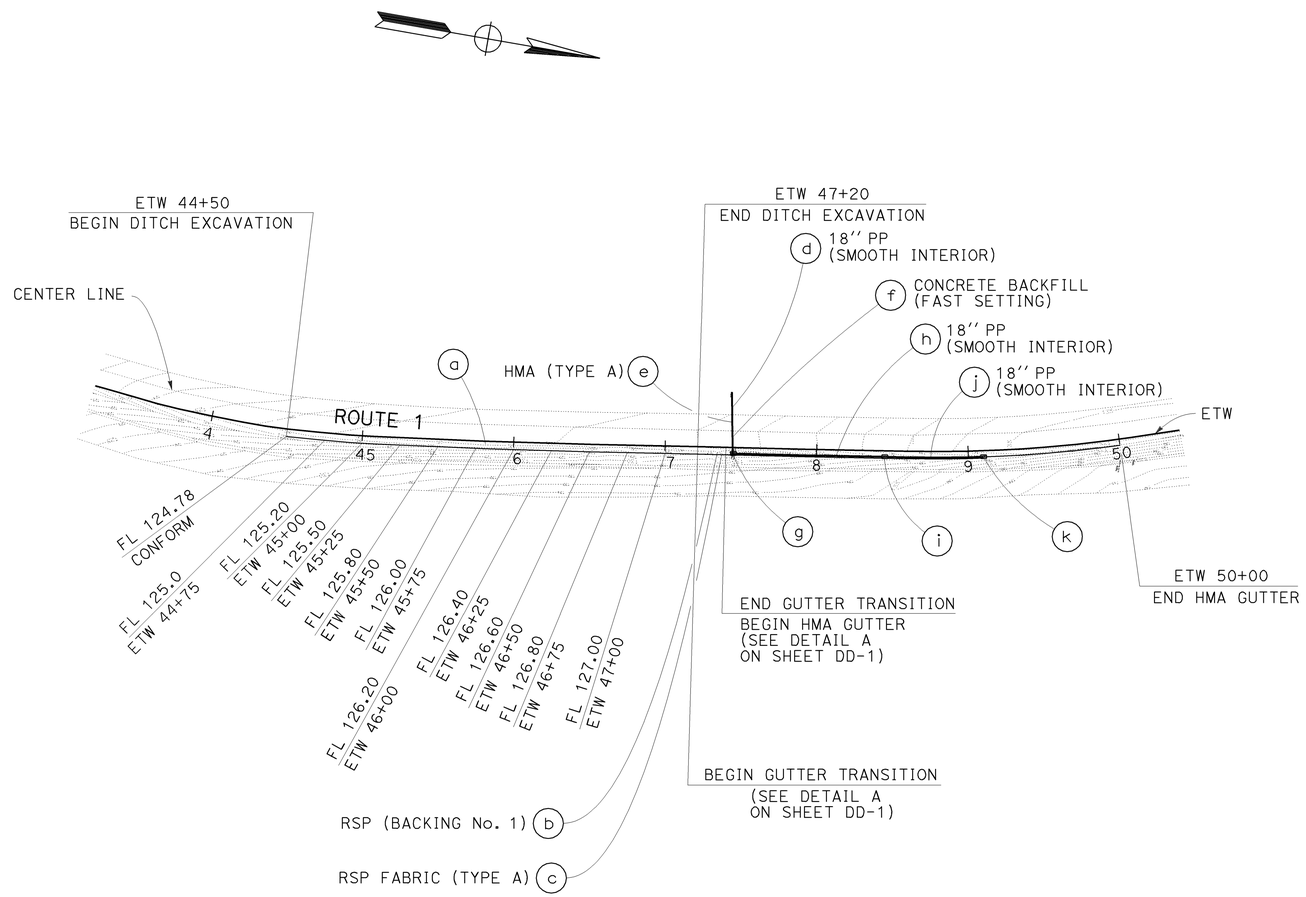

DRAINAGE SYSTEM No. (2)

DRAINAGE PLAN

SCALE: 1'' = 50'

D-2

FOR NOTES, AND LEGEND, SEE SHEET D-1

THIS PLAN ACCURATE FOR DRAINAGE WORK ONLY

CALCULATED-DESIGNED BY	CHECKED BY
BINH V. HONG	JOSE B. LAU
REVISED BY	DATE REVISED
BH	12/17/09

FUNCTIONAL SUPERVISOR: VIJITH THILAKARATNE

STATE OF CALIFORNIA - DEPARTMENT OF TRANSPORTATION
DESIGN

LAST REVISION DATE PLOTTED => 13-MAR-2010
03-08-10 TIME PLOTTED => 07:49

BORDER LAST REVISED 4/11/2008

RELATIVE BORDER SCALE IS IN INCHES 0 1 2 3

USERNAME => s128787
DGN FILE => 42a630ia002.dgn

CU 04609

EA 2A6301

Dist	COUNTY	ROUTE	POST MILES TOTAL PROJECT	SHEET No.	TOTAL SHEETS
04	Son	1	16.1/19.7	11	26

REGISTERED CIVIL ENGINEER — 1-29-10 DATE

3-15-10
PLANS APPROVAL DATE

REGISTERED PROFESSIONAL ENGINEER
Binh V. Hong
No. 63850
Exp 9-30-10
CIVIL
STATE OF CALIFORNIA

THE STATE OF CALIFORNIA OR ITS OFFICERS OR AGENTS SHALL NOT BE RESPONSIBLE FOR THE ACCURACY OR COMPLETENESS OF SCANNED COPIES OF THIS PLAN SHEET.

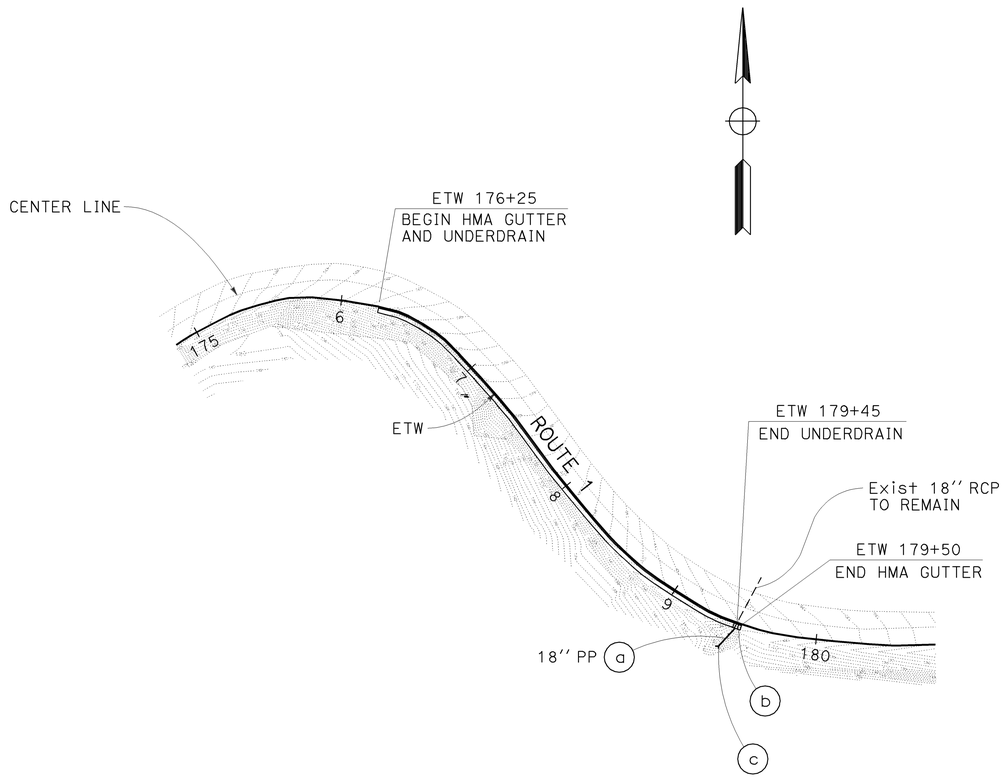

DRAINAGE SYSTEM No. 3

NOTE:

SEE SHEET DD-1 FOR DETAIL FOR UNDERDRAIN AND HMA GUTTER.

FOR NOTES, AND LEGEND, SEE SHEET D-1

THIS PLAN ACCURATE FOR DRAINAGE WORK ONLY

DRAINAGE PLAN

SCALE: 1'' = 50'

D-3

BINH V. HONG	CALCULATED-DESIGNED BY
JOSE B. LAU	CHECKED BY
BH	REVISED BY
12/17/09	DATE REVISED
VIJITH THILAKARATNE	FUNCTIONAL SUPERVISOR

STATE OF CALIFORNIA - DEPARTMENT OF TRANSPORTATION
DESIGN

LAST REVISION | DATE PLOTTED => 13-MAR-2010
03-08-10 | TIME PLOTTED => 07:49

BORDER LAST REVISED 4/11/2008

RELATIVE BORDER SCALE IS IN INCHES 0 1 2 3

USERNAME => s128787
DGN FILE => 42a630ia003.dgn

CU 04609

EA 2A6301

Dist	COUNTY	ROUTE	POST MILES TOTAL PROJECT	SHEET No.	TOTAL SHEETS
04	Son	1	16.1/19.7	12	26

REGISTERED CIVIL ENGINEER — 2-28-10 DATE

3-15-10 PLANS APPROVAL DATE

REGISTERED PROFESSIONAL ENGINEER — Binh V. Hong — No. 63850 — Exp. 9-30-10 — CIVIL — STATE OF CALIFORNIA

THE STATE OF CALIFORNIA OR ITS OFFICERS OR AGENTS SHALL NOT BE RESPONSIBLE FOR THE ACCURACY OR COMPLETENESS OF SCANNED COPIES OF THIS PLAN SHEET.

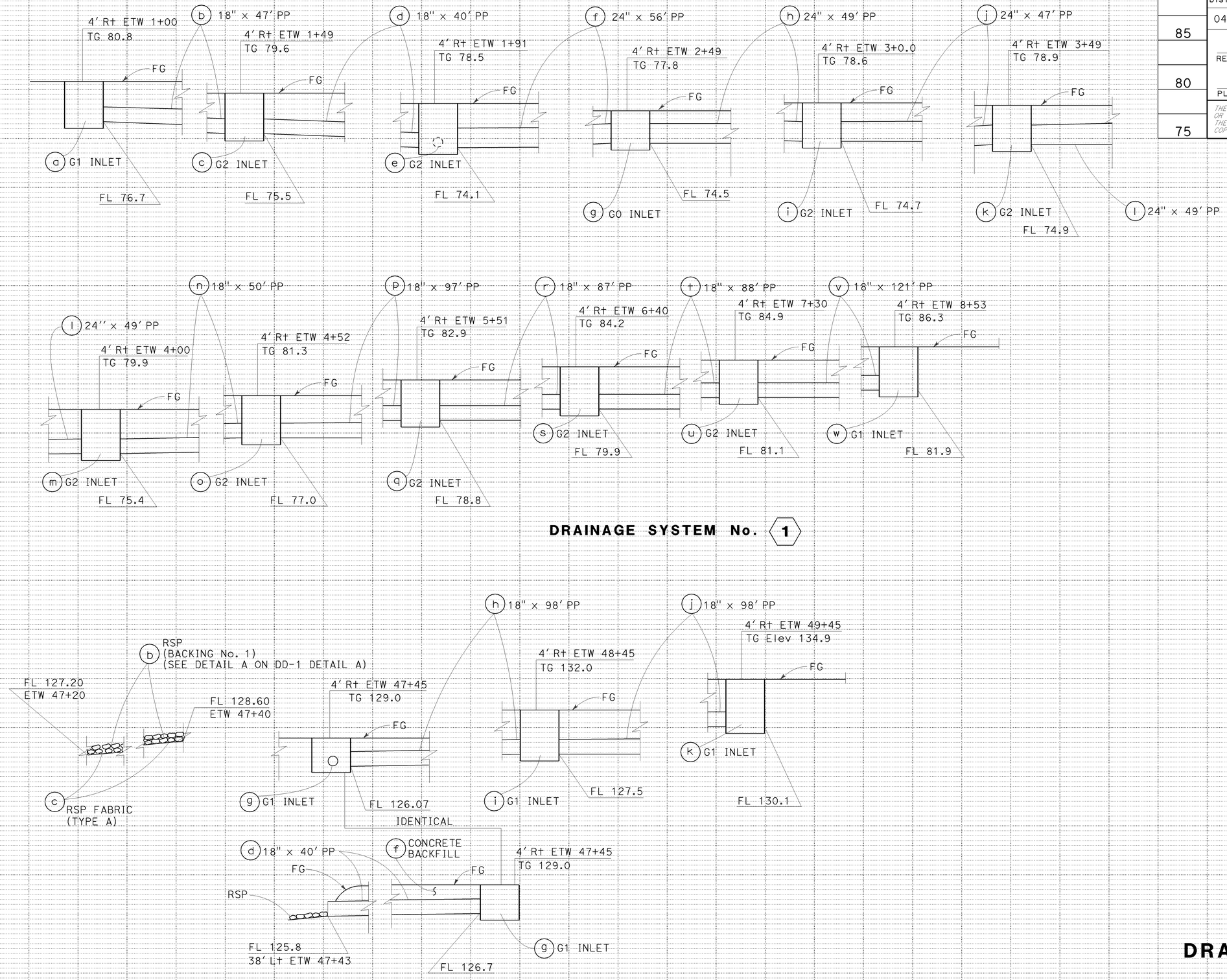

DRAINAGE SYSTEM No. 1

DRAINAGE SYSTEM No. 2

DRAINAGE PROFILES

SCALE: HORIZ 1'' = 50'
VERT 1'' = 5'

DP-1

STATE OF CALIFORNIA - DEPARTMENT OF TRANSPORTATION — DESIGN
FUNCTIONAL SUPERVISOR: VIJITH THILAKARATNE
CALCULATED-DESIGNED BY: BH — 2/28/10
CHECKED BY: BINH V. HONG — JOSE B. LAU
REVISED BY — DATE REVISED

LAST REVISION — DATE PLOTTED => 13-MAR-2010 — TIME PLOTTED => 07:50 — 03-08-10

BORDER LAST REVISED 4/11/2008 — RELATIVE BORDER SCALE IS IN INCHES (0 1 2 3) — USERNAME => s128787 — DGN FILE => 42a630ib001.dgn — CU 04609 — EA 2A6301

Dist	COUNTY	ROUTE	POST MILES TOTAL PROJECT	SHEET No.	TOTAL SHEETS
04	Son	1	16.1/19.7	13	26

REGISTERED CIVIL ENGINEER — 2-28-10 DATE

3-15-10
PLANS APPROVAL DATE

REGISTERED PROFESSIONAL ENGINEER — Binh V. Hong — No. 63850 — Exp. 9-30-10 — CIVIL — STATE OF CALIFORNIA

THE STATE OF CALIFORNIA OR ITS OFFICERS OR AGENTS SHALL NOT BE RESPONSIBLE FOR THE ACCURACY OR COMPLETENESS OF SCANNED COPIES OF THIS PLAN SHEET.

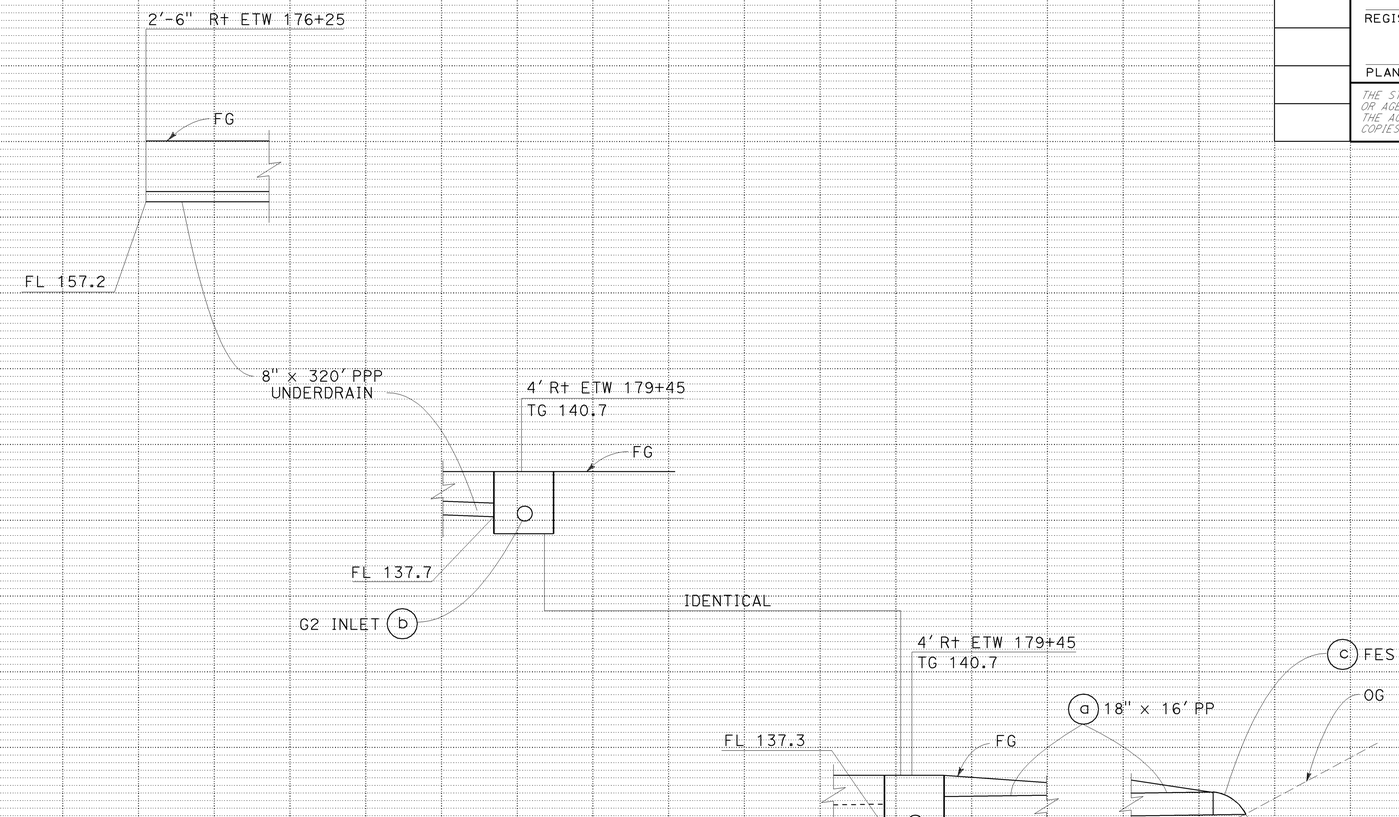

DRAINAGE SYSTEM No. 3

DRAINAGE PROFILES

SCALE: HORIZ 1" = 50'
VERT 1" = 5'

DP-2

BH 2/28/10 — REVISED BY / DATE REVISED
BINH V. HONG — CALCULATED-DESIGNED BY
JOSE B. LAU — CHECKED BY
VIJITH THILAKARATNE — FUNCTIONAL SUPERVISOR
STATE OF CALIFORNIA - DEPARTMENT OF TRANSPORTATION
Caltrans® DESIGN

LAST REVISION 03-08-10 — DATE PLOTTED => 15-MAR-2010 — TIME PLOTTED => 08:49

BORDER LAST REVISED 4/11/2008 — RELATIVE BORDER SCALE IS IN INCHES 0 1 2 3 — USERNAME => s128787 — DGN FILE => 42a630ib002.dgn — CU 04609 — EA 2A6301

Dist	COUNTY	ROUTE	POST MILES TOTAL PROJECT	SHEET No.	TOTAL SHEETS
04	Son	1	16.1/19.7	14	26

Charlotte A. Cashin 2-17-10
REGISTERED CIVIL ENGINEER DATE

3-15-10
PLANS APPROVAL DATE

REGISTERED PROFESSIONAL ENGINEER — Charlotte A. Cashin — No. 34417 — Exp 9-30-11 — CIVIL — STATE OF CALIFORNIA

THE STATE OF CALIFORNIA OR ITS OFFICERS OR AGENTS SHALL NOT BE RESPONSIBLE FOR THE ACCURACY OR COMPLETENESS OF SCANNED COPIES OF THIS PLAN SHEET.

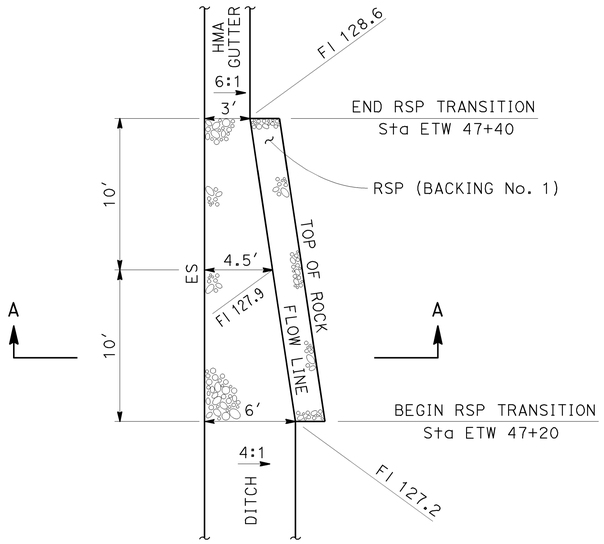

PLAN VIEW

DETAIL A
RSP TRANSITION HMA GUTTER TO DITCH

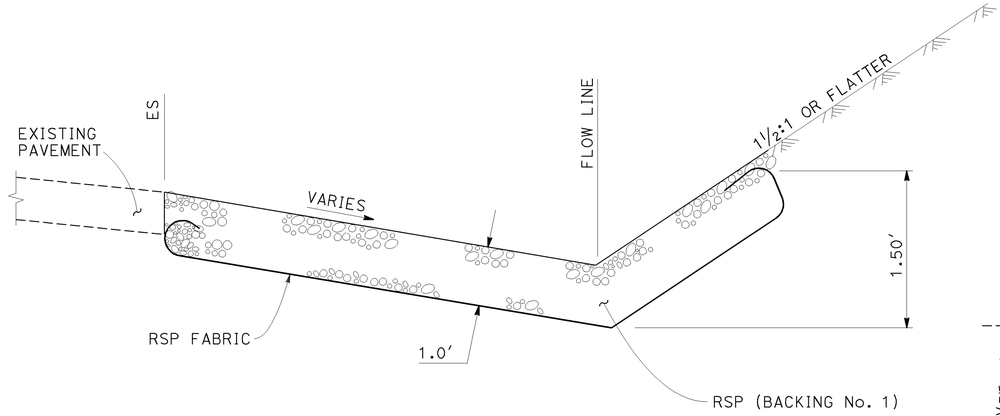

SECTION A-A

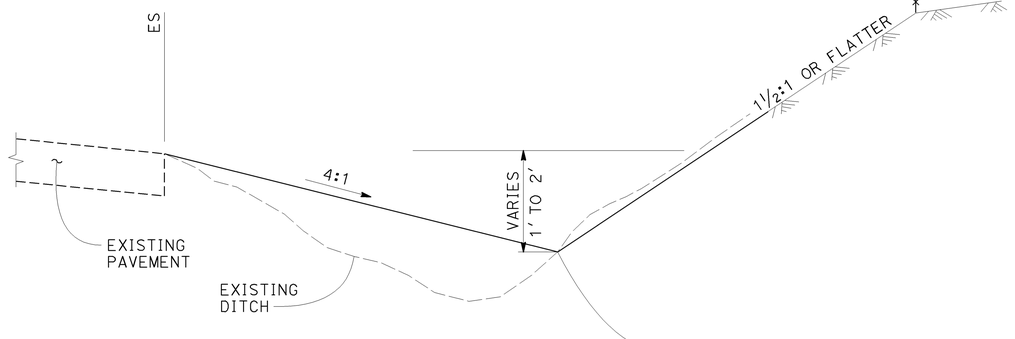

DITCH EXCAVATION
Sta ETW 44+50 TO ETW 47+20

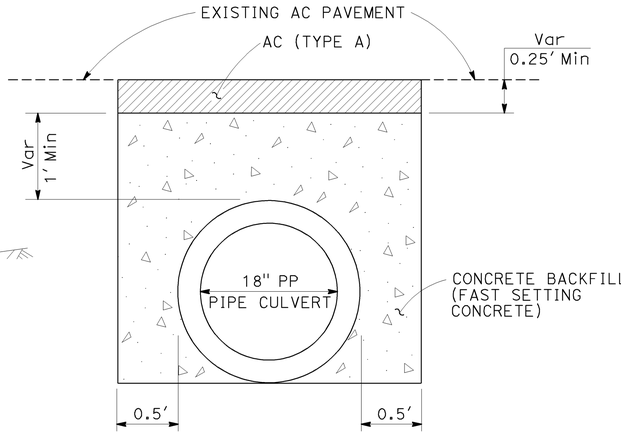

CONCRETE BACKFILL
(FAST SETTING CONCRETE)
Sta ETW 47+45

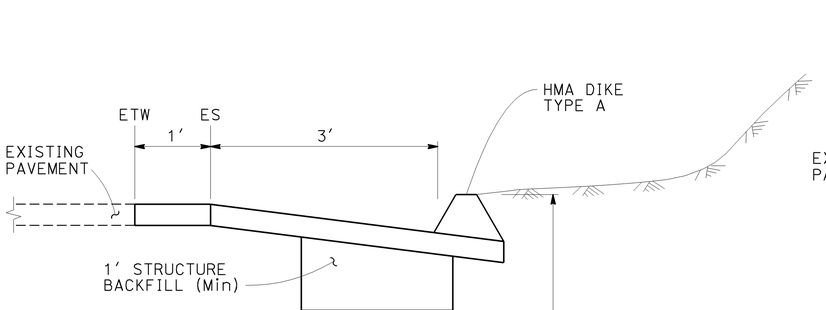

DETAIL B
UNDERDRAIN
Sta ETW 177+80 TO ETW 179+45

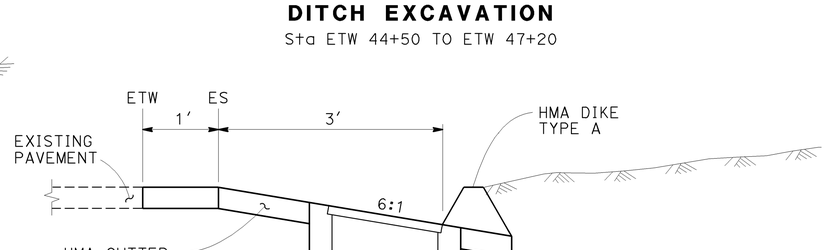

G1 INLET IN HMA GUTTER (TYPICAL)

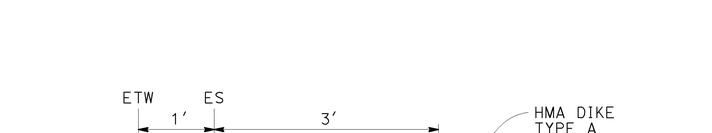

HMA GUTTER

DRAINAGE DETAILS
NO SCALE

DD-1

STATE OF CALIFORNIA - DEPARTMENT OF TRANSPORTATION
Caltrans®
DESIGN
FUNCTIONAL SUPERVISOR: JOSEPH PETERSON
CALCULATED-DESIGNED BY: CHARLOTTE A. CASHIN
CHECKED BY: JOSEPH PETERSON
REVISED BY: CC
DATE REVISED: 12/17/09

LAST REVISION: DATE PLOTTED => 15-MAR-2010 TIME PLOTTED => 08:45
03-08-10

BORDER LAST REVISED 4/11/2008
RELATIVE BORDER SCALE IS IN INCHES 0 1 2 3
USERNAME => s128787
DGN FILE => 42a630ic001.dgn
CU 0609
EA 2A6301

Dist	COUNTY	ROUTE	POST MILES TOTAL PROJECT	SHEET No.	TOTAL SHEETS
04	Son	1	16.1/19.7	15	26

Charlotte A. Cashin 2-17-10
REGISTERED CIVIL ENGINEER DATE

3-15-10
PLANS APPROVAL DATE

REGISTERED PROFESSIONAL ENGINEER
Charlotte A. Cashin
No. 34417
Exp 9-30-11
CIVIL
STATE OF CALIFORNIA

THE STATE OF CALIFORNIA OR ITS OFFICERS OR AGENTS SHALL NOT BE RESPONSIBLE FOR THE ACCURACY OR COMPLETENESS OF SCANNED COPIES OF THIS PLAN SHEET.

NOTE:

1. FOR INFORMATION NOT SHOWN, SEE Std PLAN D-73 THRU D-74B SHEETS.
2. ORIENTATION OF TYPE G1 INLETS SIMILAR.

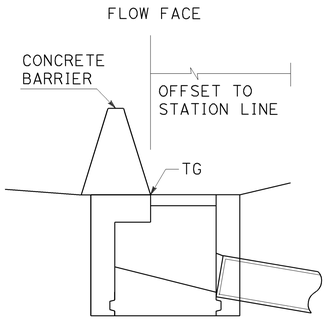

SECTION B-B

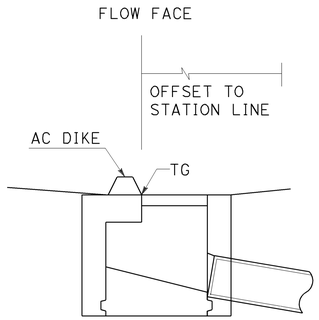

SECTION C-C

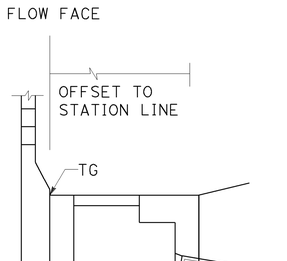

SECTION A-A

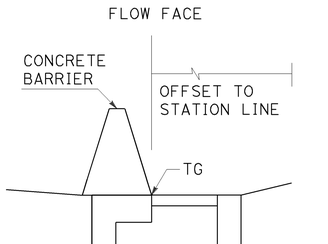

SECTION D-D

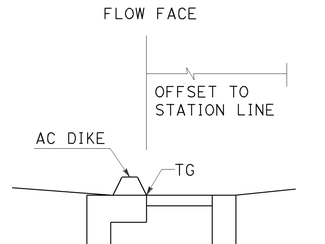

ELEVATION

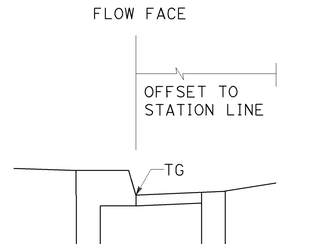

ELEVATION

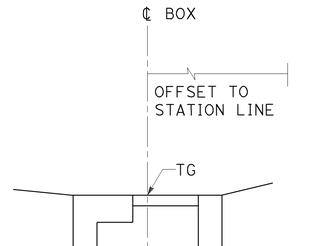

ELEVATION

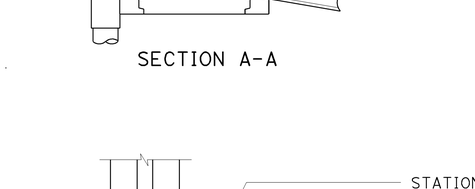

PLAN

INLET ADJACENT TO SOUNDWALL (SECTION A-A)
(TYPES 736 S/SV)

OR CONCRETE BARRIER (SECTION B-B)
(TYPES 60E, 60GE, 60SE, OR HIGH SIDE OF TYPES 60C, 60CC)

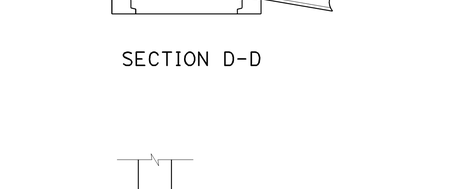

PLAN

INLET ADJACENT TO AC DIKE (SECTION C-C)

OR CONCRETE BARRIER (SECTION D-D)
(TYPE 60C SHOWN, TYPES 60, 60G, 60GC SIMILAR)

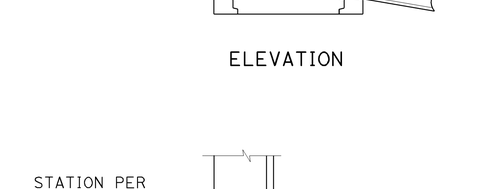

PLAN

INLET WITHIN AC SIDE GUTTER

PLAN

INLET ADJACENT TO CURB

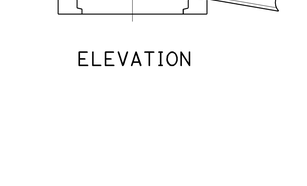

PLAN

FIELD INLET

DRAINAGE DETAILS

NO SCALE

DD-2

CHARLOTTE A. CASHIN — REVISED BY — CC — 3/3/10 — DATE REVISED
CALCULATED-DESIGNED BY — JOSEPH PETERSON — CHECKED BY
FUNCTIONAL SUPERVISOR — JOSEPH PETERSON
STATE OF CALIFORNIA - DEPARTMENT OF TRANSPORTATION — DESIGN

LAST REVISION 03-03-10 | DATE PLOTTED => 15-MAR-2010 | TIME PLOTTED => 08:46

BORDER LAST REVISED 4/11/2008 | RELATIVE BORDER SCALE IS IN INCHES 0 1 2 3 | USERNAME => s128787 | DGN FILE => 42a630ic002.dgn | CU 0609 | EA 2A6301

Dist	COUNTY	ROUTE	POST MILES TOTAL PROJECT	SHEET No.	TOTAL SHEETS
04	Son	1	16.1/19.7	16	26

REGISTERED CIVIL ENGINEER — DATE 1-29-10

PLANS APPROVAL DATE 3-15-10

REGISTERED PROFESSIONAL ENGINEER — Binh V. Hong — No. 63850 — Exp 9-30-10 — CIVIL — STATE OF CALIFORNIA

THE STATE OF CALIFORNIA OR ITS OFFICERS OR AGENTS SHALL NOT BE RESPONSIBLE FOR THE ACCURACY OR COMPLETENESS OF SCANNED COPIES OF THIS PLAN SHEET.

NOTE: ALL JOINT CLASSIFICATION IS STANDARD.

DRAINAGE QUANTITIES

DRAINAGE SYSTEM No.	DRAINAGE UNIT	MINOR STRUCTURE (MINOR CONCRETE) CY	HMA (TYPE A) TON	18" PP (SMOOTH INTERIOR)	24" PP (SMOOTH INTERIOR)	DITCH EXCAVATION CY	CONCRETE BACKFILL (FAST SETTING CONCRETE) CY	TYPE GO INLET (N) TYPE 24-12X EA	TYPE G1 INLET (N) TYPE 24-12X EA	TYPE G2 INLET (N) TYPE 24-12X EA	FRAME AND GRATE (N) TYPE 24-12X EA	MISCELLANEOUS IRON AND STEEL LB	HEIGHT OF INLET (N) LF	RSP (BACKING No. 1) CY	RSP FABRIC (TYPE A) SQYD	18'' ALT. FLARED END SECTION EA	DESCRIPTION	STATION	DRAINAGE PLAN SHEET No.	DRAINAGE SYSTEM No.	DRAINAGE UNIT
1	a	1.61							1		1	239	4.8				GI INLET w/ 24-12X FRAME AND GRATE	4' Rt ETW 1+00	D-1	1	a
	b			47													18" PP	2'-6'' Rt ETW 1+01 TO 1+48			b
	c	2.08								1	1	239	4.8				G2 INLET w/ 24-12X FRAME AND GRATE	4' Rt ETW 1+49			c
	d			40													18" PP	2' Rt ETW 1+50 TO 1+90			d
	e	2.08								1	1	239	5.1				G2 INLET w/ 24-12X FRAME AND GRATE	4' Rt ETW 1+91			e
	f				56												24" PP	2' Rt ETW 1+92 TO 2+48			f
	g	1.73						1			1	239	4.0				GO INLET w/ 24-12X FRAME AND GRATE	4' Rt ETW 2+49			g
	h				49												24" PP	2' Rt ETW 2+50 TO 2+99			h
	i	2.08								1	1	239	4.6				G2 INLET w/ 24-12X FRAME AND GRATE	4' Rt ETW 3+00			i
	j				47												24" PP	2' Rt ETW 3+01 TO 3+48			j
	k	2.08								1	1	239	4.7				G2 INLET w/ 24-12X FRAME AND GRATE	4' Rt ETW 3+49			k
	l				49												24" PP	2' Rt ETW 3+50 TO 3+99			l
	m	2.08								1	1	239	5.2				G2 INLET w/ 24-12X FRAME AND GRATE	4' Rt ETW 4+00			m
	n			50													18" PP	2' Rt ETW 4+01 TO 4+51			n
	o	2.08								1	1	239	5.0				G2 INLET w/ 24-12X FRAME AND GRATE	4' Rt ETW 4+52			o
	p			97													18" PP	2' Rt ETW 4+53 TO 5+50			p
	q	2.08								1	1	239	4.8				G2 INLET w/ 24-12X FRAME AND GRATE	4' Rt ETW 5+51			q
	r			87													18" PP	2' Rt ETW 5+52 TO 6+39			r
	s	2.08								1	1	239	5.0				G2 INLET w/ 24-12X FRAME AND GRATE	4' Rt ETW 6+40			s
	t			88													18" PP	2' Rt ETW 6+41 TO 7+29			t
	u	2.08								1	1	239	4.5				G2 INLET w/ 24-12X FRAME AND GRATE	3' Rt ETW 7+30			u
	v			121													18" PP	2' Rt ETW 7+31TO 8+52			v
	w	1.61									1	239	5.1				GI INLET w/ 24-12X FRAME AND GRATE	4' Rt ETW 8+53			w
2	a					150											DITCH EXCAVATION	3' Rt ETW 44+50 TO 47+20	D-2	2	a
	b													8			RSP (BACKING No. 1)	3' Rt ETW 47+20 TO 47+40			b
	c														30		RSP FABRIC (TYPE A)	3' Rt ETW 47+20 TO 47+40			c
	d			40													18" PP	1' Rt ETW TO 39' Lt 47+45			d
	e		3														HMA BACKFILL AT CROSS CULVERT	1' Rt ETW TO 23' Lt 47+45			e
	f						10										CONCRETE BACKFILL AT CROSS CULVERT	1' Rt ETW TO 23' Lt 47+45			f
	g	1.61							1		1	239	3.6				GI INLET w/ 24-12X FRAME AND GRATE	4' Rt ETW 47+45			g
	h			98													18" PP	2'-6'' Rt ETW 47+46 TO 48+44			h
	i	1.61							1		1	239	5.2				GI INLET w/ 24-12X FRAME AND GRATE	4' Rt ETW 48+45			i
	j			98													18" PP	2'-6'' Rt ETW 48+46 TO 49+44			j
	k	1.61									1	239	5.5				GI INLET w/ 24-12X FRAME AND GRATE	4' Rt ETW 49+45			k
3	a			16													18" PP	14' Rt ETW 179+44 TO 4' Rt 179+45	D-3	3	a
	b	2.08							1	1	1	239	4.1				G2 INLET w/ 24-12X FRAME AND GRATE	4' Rt ETW 179+45			b
	c															1	18'' ALT. FLARED END SECTION	14' Rt ETW 179+44			c
SHEET TOTAL		30.6	3	782	201	150	10	1	5	10	16	3824		8	30	1	SHEET TOTAL				

(N) - NOT A SEPARATE PAY ITEM, FOR INFORMATION ONLY

DRAINAGE QUANTITIES DQ-1

STATE OF CALIFORNIA - DEPARTMENT OF TRANSPORTATION — DESIGN

FUNCTIONAL SUPERVISOR: VIJITH THILAKARATNE

CALCULATED-DESIGNED BY | CHECKED BY

REVISED BY: BH — DATE REVISED: 12/17/09

BINH V. HONG | JOSE B. LAU

LAST REVISION | DATE PLOTTED => 13-MAR-2010 | TIME PLOTTED => 07:59 | 03-08-10

BORDER LAST REVISED 4/11/2008 | RELATIVE BORDER SCALE IS IN INCHES 0 1 2 3 | USERNAME => s128787 | DGN FILE => 42a6301d001.dgn | CU 04609 | EA 2A6301

Dist	COUNTY	ROUTE	POST MILES TOTAL PROJECT	SHEET No.	TOTAL SHEETS
04	Son	1	16.1/19.7	17	26

REGISTERED CIVIL ENGINEER — DATE: 2-17-10

PLANS APPROVAL DATE: 3-15-10

REGISTERED PROFESSIONAL ENGINEER — Jerilyn L. Struven — No. 49964 — Exp. 12-31-10 — CIVIL — STATE OF CALIFORNIA

THE STATE OF CALIFORNIA OR ITS OFFICERS OR AGENTS SHALL NOT BE RESPONSIBLE FOR THE ACCURACY OR COMPLETENESS OF SCANNED COPIES OF THIS PLAN SHEET.

LEGEND:

No.	CONSTRUCTION AREA SIGN NUMBER
(S)	DENOTES STATIONARY MOUNTED SIGN
→	DIRECTION OF TRAFFIC

NOTE:

1. EXACT LOCATION AND POSITION OF CONSTRUCTION AREA SIGNS TO BE DETERMINED BY THE ENGINEER.

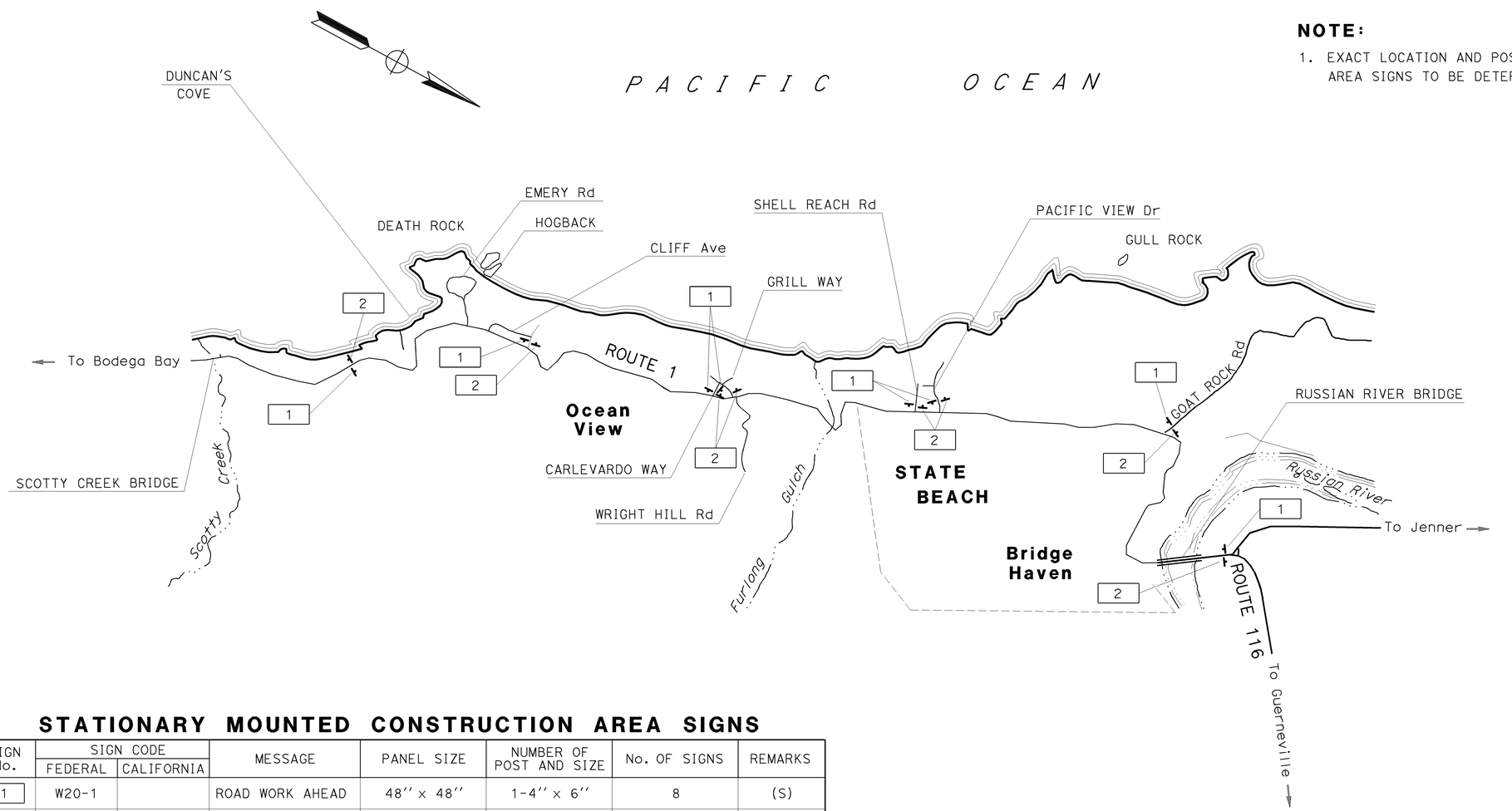

STATIONARY MOUNTED CONSTRUCTION AREA SIGNS

SIGN No.	SIGN CODE FEDERAL	SIGN CODE CALIFORNIA	MESSAGE	PANEL SIZE	NUMBER OF POST AND SIZE	No. OF SIGNS	REMARKS
1	W20-1		ROAD WORK AHEAD	48'' x 48''	1-4'' x 6''	8	(S)
2	G20-2		END ROAD WORK	48'' x 24''	1-4'' x 4''	8	(S)

CONSTRUCTION AREA SIGNS

NO SCALE

THIS PLAN ACCURATE FOR CONSTRUCTION AREA SIGN WORK ONLY

CS-1

CALCULATED-DESIGNED BY	
CHECKED BY	
REVISED BY	ST
DATE REVISED	12/17/09
SHARI TALAI	
JERILYN L. STRUVEN	
FUNCTIONAL SUPERVISOR	ROLAND AU-YEUNG

STATE OF CALIFORNIA - DEPARTMENT OF TRANSPORTATION — TRAFFIC — Caltrans

LAST REVISION | DATE PLOTTED => 13-MAR-2010 | TIME PLOTTED => 08:00 | 03-08-10

BORDER LAST REVISED 4/11/2008

RELATIVE BORDER SCALE IS IN INCHES 0 1 2 3

USERNAME => s128787
DGN FILE => 42a6301a001.dgn

CU 04609

EA 2A6301

Dist	COUNTY	ROUTE	POST MILES TOTAL PROJECT	SHEET No.	TOTAL SHEETS
04	Son	1	16.1/19.7	18	26

REGISTERED CIVIL ENGINEER — 1-29-10 DATE

3-15-10
PLANS APPROVAL DATE

REGISTERED PROFESSIONAL ENGINEER — Binh V. Hong — No. 63850 — Exp 9-30-10 — CIVIL — STATE OF CALIFORNIA

THE STATE OF CALIFORNIA OR ITS OFFICERS OR AGENTS SHALL NOT BE RESPONSIBLE FOR THE ACCURACY OR COMPLETENESS OF SCANNED COPIES OF THIS PLAN SHEET.

SUMMARY OF QUANTITIES

PM	STATION	DIRECTION	WIDTH (N)	LENGTH (N)	LENGTH	DEPTH (N)	COLD PLANE AC PAVEMENT	HMA (TYPE A)	TACK COAT	REMARKS
			LF				SQYD	TON		
16.2	ETW 5+75 TO 6+25	NB	10	50		0.5	56	19	0.1	LOCALLY ISOLATED AREA
16.3	ETW 8+75 TO 10+75		10	200		0.5	222	75	0.1	
16.3	ETW 5+75 TO 10+75	SB	10	500		0.5	556	187	0.2	
16.2/16.3	ETW 5+75 TO 13+53	NB & SB	22	778		0.25		320	0.8	HMA RESURFACING
17.0	ETW 47+45		3.5	40		0.25		3	0.01	CULVERT BACKFILL
16.1/16.2	ETW 0+00 TO 10+07	NB	4	1007		0.5		150	0.19	HMA GUTTER
17.0	ETW 47+40 TO 50+00		4	260		0.5		39	0.05	
19.5	ETW 176+25 TO 179+45		4	320		0.5		48	0.06	
16.1/16.2	ETW 0+00 TO 10+07		0.9		1007			28	0.01	HMA DIKE
17.0	ETW 47+40 TO 50+00		0.9		260			7		
19.5	ETW 176+25 TO 179+45		0.9		320			9		
TOTAL					1587		834	885	1.52	

(N) - FOR INFORMATION ONLY. NOT A PAID ITEM.

CRACK TREATMENT

PM	STATION	DIRECTION	LMNI
16.1/19.7	ETW 0+00 TO 189+26	NB & SB	3

IMPORTED MATERIAL (SHOULDER BACKING)

PM	STATION	DIRECTION	TON
16.1/19.7	ETW 0+00 TO 189+26	SB*	99
16.3/16.4	ETW 10+75 TO 13+53	NB	2
16.3/16.9	ETW 13+53 TO 44+50		18
17.0/19.4	ETW 50+00 TO 176+25		65
19.5/19.7	ETW 179+45 TO 189+26		5
TOTAL			189

* IN SB DIRECTION, NO PROJECT RELATED ACTIVITIES SHALL TAKE PLACE BEYOND 3 FEET FROM EP OR BELOW 6 INCH DEPTH BELOW Exist GROUND SURFACE BETWEEN PM 16.23/16.33

AGGREGATE BASE (CLASS 3)

PM	STATION	DIRECTION	CY
16.1/16.3	ETW 0+00 TO 10+07	NB	41
16.9/17.0	ETW 47+45 TO 50+00		27
19.4/19.5	ETW 176+25 TO 179+45		29
TOTAL			97

UNDERDRAIN

STATION	FILTER FABRIC (N)	PERMEABLE MATERIAL CL 3 (N)	8'' PPP
	SQYD	CY	LF
ETW 176+25 TO ETW 179+45	356	71	320

(N) - FOR INFORMATION ONLY. NOT A PAID ITEM.

TRAFFIC STRIPES, PAVEMENT MARKINGS AND PAVEMENT MARKERS

PM	STATION	DIRECTION	DETAIL No.	THERMOPLASTIC TRAFFIC STRIPE 4'' YELLOW	THERMOPLASTIC TRAFFIC STRIPE 4'' WHITE	PAVEMENT MARKERS RETROREFLECTIVE TYPE D	REMOVE THERMOPLASTIC TRAFFIC STRIPE 4'' YELLOW	REMOVE THERMOPLASTIC TRAFFIC STRIPE 4'' WHITE	REMOVE PAVEMENT MARKERS
				LF		EA	LF		EA
16.2 TO 16.3	ETW 5+75 TO 13+53	NB & SB	22	1560		70	1560		70
			27B		1560			1560	
16.3	ETW 12+00	SB	27C	140				30	
17.0	ETW 47+45	NB & SB	22	8		2			
			27B		8				
SUBTOTAL				1708	1568	72	1560	1590	70
TOTAL				3276		72	1560	1590	70

ROADWAY EXCAVATION

PM	STATION	DIRECTION	CY
16.1/16.3	ETW 10+00 TO 10+07	NB	125
19.4/19.5	ETW 176+26 TO 179+45		75
TOTAL			200

BIN V. HONG — DESIGN
JOSE B. LAU — CALCULATED-DESIGNED BY
CHECKED BY
BH — REVISED BY — 12/17/09 — DATE REVISED
VIJITH THILAKARATNE — FUNCTIONAL SUPERVISOR
STATE OF CALIFORNIA - DEPARTMENT OF TRANSPORTATION — Caltrans

LAST REVISION 03-08-10
DATE PLOTTED => 15-MAR-2010
TIME PLOTTED => 06:33

BORDER LAST REVISED 4/11/2008
RELATIVE BORDER SCALE IS IN INCHES 0 1 2 3
USERNAME => s128787
DGN FILE => 42a630pa001.dgn

CU 04609 | EA 2A6301

DIST	COUNTY	ROUTE	POST MILES TOTAL PROJECT	SHEET NO.	TOTAL SHEETS
04	Son	1	16.1/19.7	19	26

Raymond Don Tsztoo
REGISTERED CIVIL ENGINEER

January 18, 2008
PLANS APPROVAL DATE

REGISTERED PROFESSIONAL ENGINEER — Raymond Don Tsztoo — No. C37332 — Exp. 6-30-08 — CIVIL — STATE OF CALIFORNIA

The State of California or its officers or agents shall not be responsible for the accuracy or completeness of electronic copies of this plan sheet.

To accompany plans dated 3-15-10

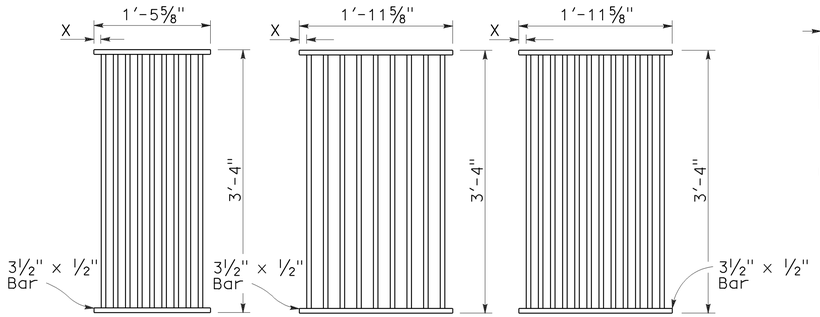

TYPE 18-9

1⅜" Clear spacing. Use within the roadbed on highways where bicycles and pedestrians are excluded.

TYPE 24-9

2" Clear spacing. Use in locations off the roadbed on all types of highways.

TYPE 24-12

1⅜" Clear spacing. Use within the roadbed on highways where bicycles and pedestrians are excluded.

RECTANGULAR GRATE DETAILS

(See table below)

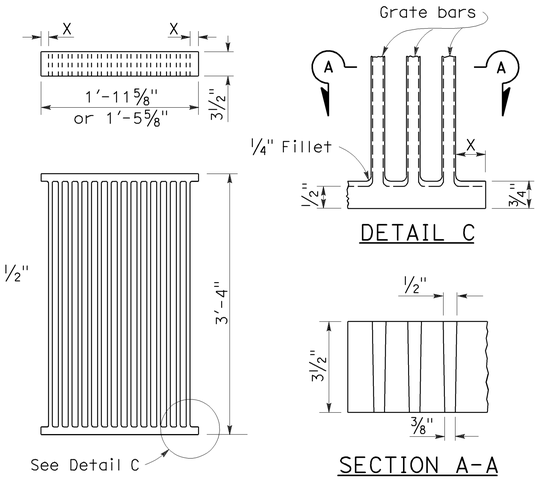

DETAIL C

SECTION A-A

ALTERNATIVE CAST NODULAR IRON GRATE OR CAST STEEL GRATE

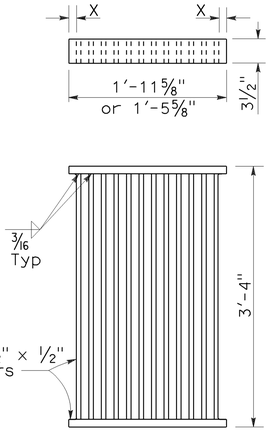

ALTERNATIVE WELDED GRATE

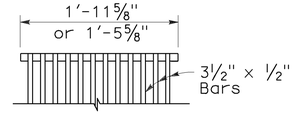

CAST END BLOCK

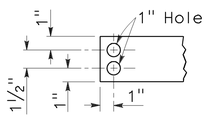

END OF BAR

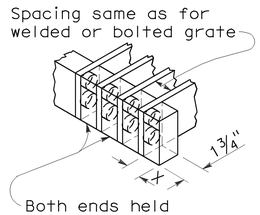

ALTERNATIVE CAST NODULAR IRON OR CAST STEEL END BLOCK GRATE

NOTES:

1. Grate type numbers refer to approximate width of grate in inches and number of bars, respectively.
2. Contractor has the option of using cast nodular iron, cast steel, welded, bolted, or cast end block grate.
3. See Special Provisions for requirements pertaining to galvanizing or asphalt dipping of grates and frames.
4. Rounded top of bars optional on all grates.
5. Pipe inlets with a grate shall be placed so that bars parallel direction of principle surface flow.
6. Full penetration butt welds may be substituted for the fillet welds on all anchors.
7. Standard square, hexagon, round or equivalent headed anchors may be substituted for the right angle hooks on the anchors shown on this plan.
8. Grate and frame weights are based on welded grates (weights of face angles, steps, protection bars, etc. are not included).

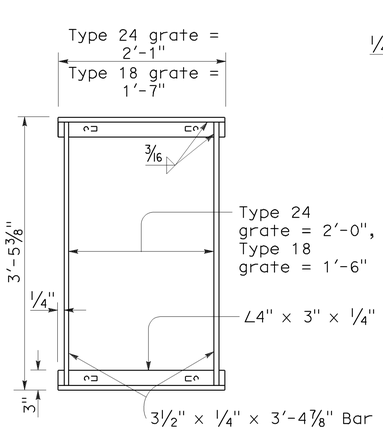

TYPICAL FRAME

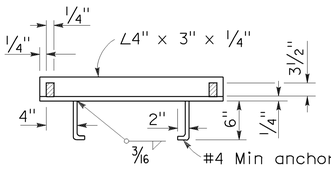

CROSS SECTION
(Thru frame)

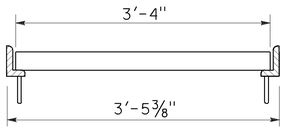

LONGITUDINAL SECTION
(Thru frame and grate)

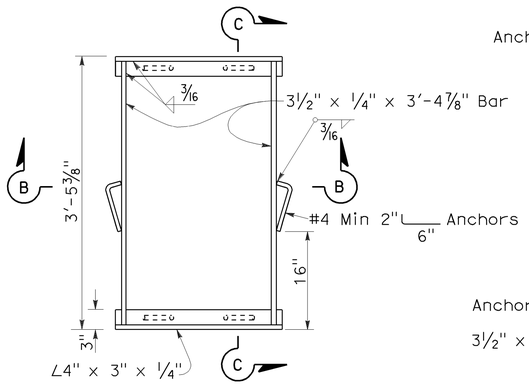

TYPICAL FRAME

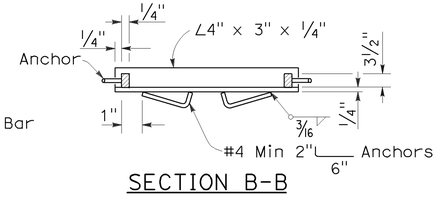

SECTION B-B

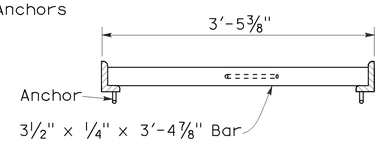

SECTION C-C

ALTERNATIVE ANCHOR FOR RECTANGULAR FRAME

(For details not shown, See Rectangular Frame Details)

RECTANGULAR FRAME DETAILS

(For all rectangular grates)

GRATE BAR SPACING TABLE

TYPE	No. OF BARS	CLEAR BAR SPACING	X
18-9	9	1⅜"	1 1/16"
24-9	9	2"	1 9/16"
24-12	12	1⅜"	1¼"

INLET TYPE	COVER TYPE	WEIGHT LB
OS	PLATE	174
OL-7	PLATE	170
OL-10	PLATE	170
OL-14	PLATE	170
OL-21	PLATE	170
OCP	PLATE	112
OCPI	PLATE	112
OCPI	REDWOOD	42
OMP	PLATE	177
OMPI	PLATE	177

INLET TYPE	GRATE TYPE	No. OF GRATES	WEIGHT LB
GDO	24-12	2	634
GOL-7	24-12	1	326
GOL-10	24-12	1	326
GO,G1,G2,G3,G4 (TYPE 24)	24-9	1	263
	24-12	1	326
G4 (TYPE 18),G5,G6	18-9	1	249
GT1	18-9	2	498
GT2	18-9	2	498
GT3	24-12	2	652
GT4	24-12	2	652
TRASH RACK			22

BASIS FOR MISC IRON & STEEL FINAL PAY WEIGHTS FOR DRAINAGE INLETS

(See General Notes, No 8)

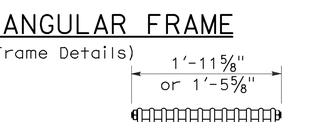

BOLTED END BLOCK

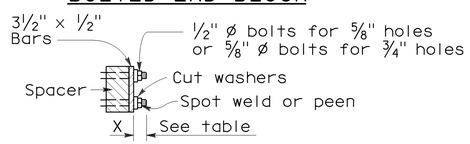

BOLTING DETAIL

ALTERNATIVE BOLTED GRATE

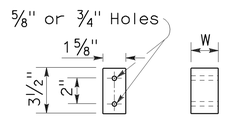

BAR SPACER

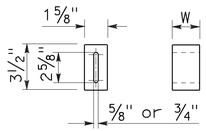

ALTERNATIVE SPACER
W = 1⅜" or 2"

STATE OF CALIFORNIA
DEPARTMENT OF TRANSPORTATION

GRATE DETAILS

NO SCALE

RSP D77A DATED JANUARY 18, 2008 SUPERSEDES STANDARD PLAN D77A DATED MAY 1, 2006 - PAGE 155 OF THE STANDARD PLANS BOOK DATED MAY 2006.

REVISED STANDARD PLAN RSP D77A

12-14-07

DIST	COUNTY	ROUTE	POST MILES TOTAL PROJECT	SHEET NO.	TOTAL SHEETS
04	Son	1	16.1/19.7	20	26

Randell D. Hiatt
REGISTERED CIVIL ENGINEER

June 6, 2008
PLANS APPROVAL DATE

Randell D. Hiatt
No. C50200
Exp. 6-30-09
CIVIL
REGISTERED PROFESSIONAL ENGINEER
STATE OF CALIFORNIA

The State of California or its officers or agents shall not be responsible for the accuracy or completeness of electronic copies of this plan sheet.

To accompany plans dated 3-15-10

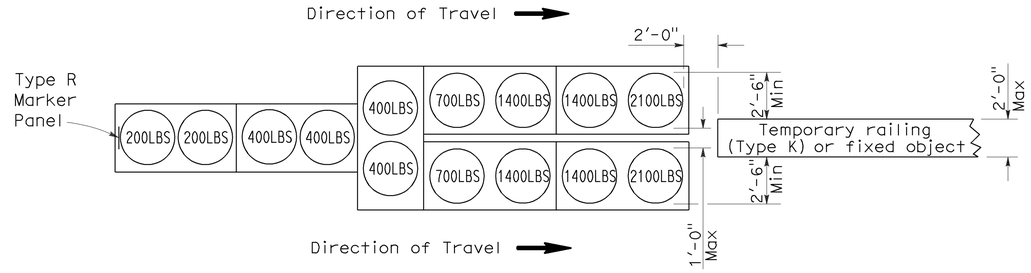

ARRAY 'TU14'

Approach speed 45 mph or more

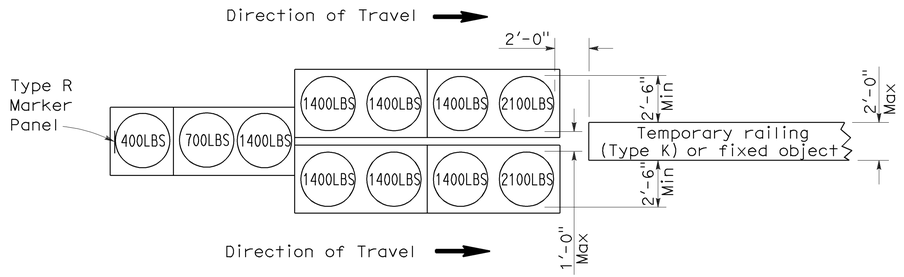

ARRAY 'TU11'

Approach speed less than 45 mph

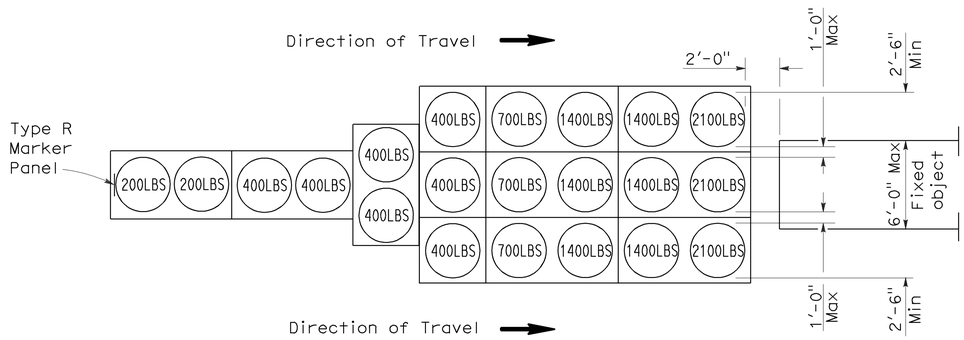

ARRAY 'TU21'

Approach speed 45 mph or more

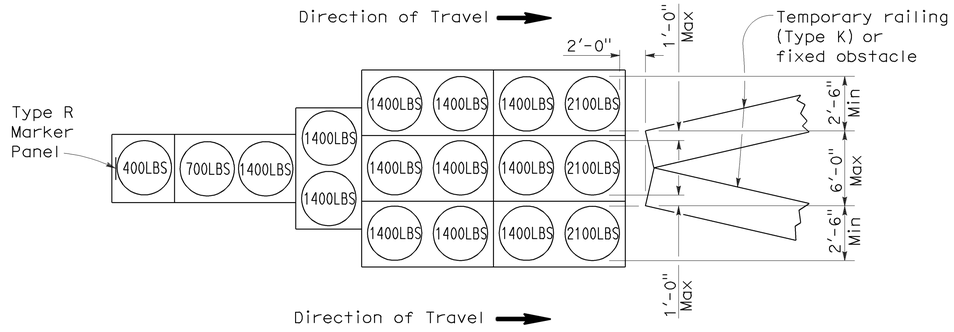

ARRAY 'TU17'

Approach speed less than 45 mph

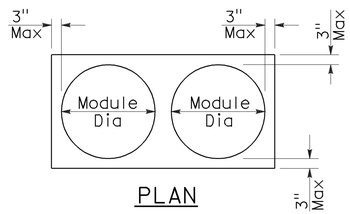

PLAN

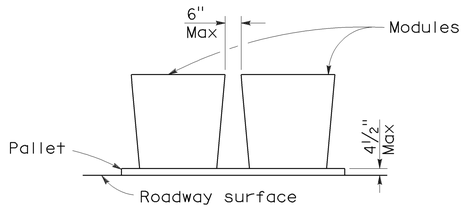

ELEVATION

CRASH CUSHION PALLET DETAIL

See Note 7

NOTES:

1. (XXX) Indicates sand filled module location and weight of sand in pounds for each module. Module spacing is based on the greater diameter of the module.
2. All sand weights are nominal.
3. Temporary crash cushion arrays shall not encroach on the traveled way.
4. Place the top of Type R marker panel 1" below the module lid.
5. Refer to Standard Plan A73B for marker details.
6. Approach speeds indicated conform to NCHRP 350 Report criteria.
7. Use of pallets is optional.

STATE OF CALIFORNIA
DEPARTMENT OF TRANSPORTATION

TEMPORARY CRASH CUSHION, SAND FILLED (UNIDIRECTIONAL)

NO SCALE

RSP T1A DATED JUNE 6, 2008 SUPERSEDES STANDARD PLAN T1A
DATED MAY 1, 2006 - PAGE 211 OF THE STANDARD PLANS BOOK DATED MAY 2006.

REVISED STANDARD PLAN RSP T1A

2006 REVISED STANDARD PLAN RSP T1A

5-15-08

DIST	COUNTY	ROUTE	POST MILES TOTAL PROJECT	SHEET NO.	TOTAL SHEETS
04	Son	1	16.1/19.7	21	26

Randell D. Hiatt
REGISTERED CIVIL ENGINEER

June 6, 2008
PLANS APPROVAL DATE

REGISTERED PROFESSIONAL ENGINEER
Randell D. Hiatt
No. C50200
Exp. 6-30-09
CIVIL
STATE OF CALIFORNIA

The State of California or its officers or agents shall not be responsible for the accuracy or completeness of electronic copies of this plan sheet.

To accompany plans dated 3-15-10

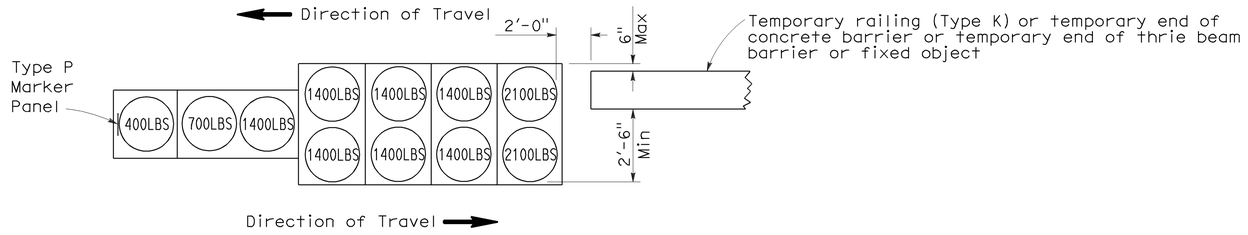

ARRAY 'TB11'

Approach speed less than 45 mph

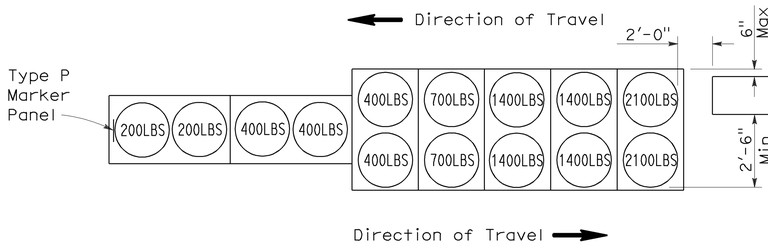

ARRAY 'TB14'

Approach speed 45 mph or more

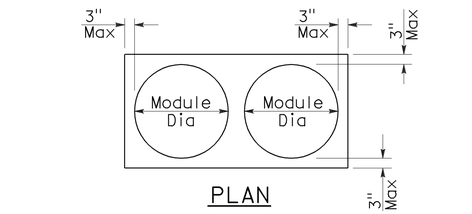

CRASH CUSHION PALLET DETAIL

See Note 7

NOTES:

1. (XXX) Indicates sand filled module location and weight of sand in pounds for each module. Module spacing is based on the greater diameter of the module.
2. All sand weights are nominal.
3. Temporary crash cushion arrays shall not encroach on the traveled way.
4. Place the Type P marker panel so that the bottom of the panel rests upon the pallet.
5. Refer to Standard Plan A73B for marker details.
6. Approach speeds indicated conform to NCHRP 350 Report criteria.
7. Use of pallets is optional.

STATE OF CALIFORNIA
DEPARTMENT OF TRANSPORTATION

TEMPORARY CRASH CUSHION, SAND FILLED (BIDIRECTIONAL)

NO SCALE

RSP T1B DATED JUNE 6, 2008 SUPERSEDES STANDARD PLAN T1B
DATED MAY 1, 2006 - PAGE 212 OF THE STANDARD PLANS BOOK DATED MAY 2006.

REVISED STANDARD PLAN RSP T1B

2006 REVISED STANDARD PLAN RSP T1B

5-15-08

DIST	COUNTY	ROUTE	POST MILES TOTAL PROJECT	SHEET NO.	TOTAL SHEETS
04	Son	1	16.1/19.7	22	26

Randell D. Hiatt
REGISTERED CIVIL ENGINEER

June 6, 2008
PLANS APPROVAL DATE

REGISTERED PROFESSIONAL ENGINEER
Randell D. Hiatt
No. C50200
Exp. 6-30-09
CIVIL
STATE OF CALIFORNIA

The State of California or its officers or agents shall not be responsible for the accuracy or completeness of electronic copies of this plan sheet.

To accompany plans dated 3-15-10

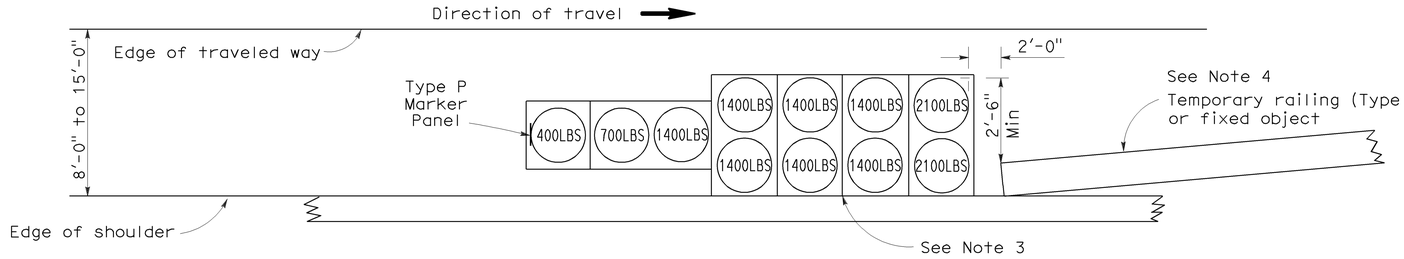

ARRAY 'TS11'

Approach speed less than 45 mph
See Note 9

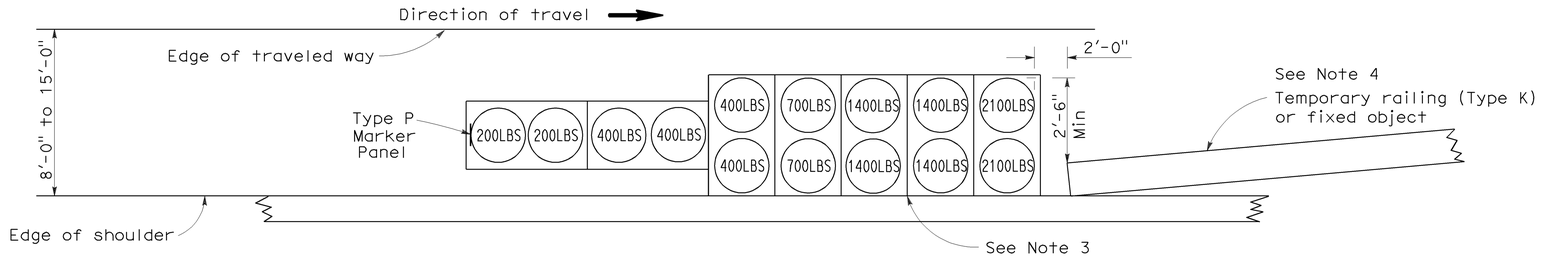

ARRAY 'TS14'

Approach speed 45 mph or more
See Note 9

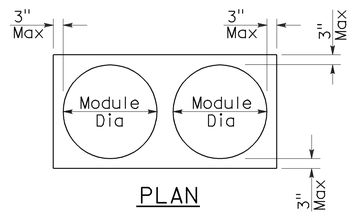

PLAN

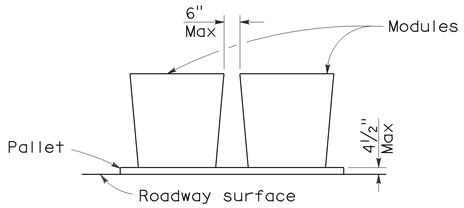

ELEVATION

CRASH CUSHION PALLET DETAIL

See Note 11

NOTES:

1. (XXX) Indicates sand filled module location and weight of sand in pounds for each module. Module spacing is based on the greater diameter of the module.
2. All sand weights are nominal.
3. The temporary crash cushion arrays shown on this plan shall be used only in locations where there will be traffic on one side of the temporary crash cushion array.
4. If the fixed object or approach end of the temporary railing is less than 15'-0" from the edge of traveled way, a temporary crash cushion is required in a construction or work zone.
5. Temporary crash cushion arrays shall not encroach on the traveled way.
6. Arrays for median shoulders shall conform to details shown on this plan for outside shoulders.
7. Place the Type P marker panel so that the bottom of the panel rests upon the pallet and faces traffic.
8. Refer to Standard Plan A73B for marker details.
9. For shoulder widths less than 8'-0", appropriate approved crash cushion protection, other than sand filled modules, shall be provided at fixed objects and at approach ends of temporary railing. The specific type of crash cushion shall be as shown on the project plans or as specified in the Special Provisions, or if not shown on the project plans or specified in the Special Provisions, shall be as approved by the Engineer.
10. Approach speeds indicated conform to NCHRP 350 Report criteria.
11. Use of pallets is optional.

STATE OF CALIFORNIA
DEPARTMENT OF TRANSPORTATION

TEMPORARY CRASH CUSHION, SAND FILLED (SHOULDER INSTALLATIONS)

NO SCALE

RSP T2 DATED JUNE 6, 2008 SUPERSEDES STANDARD PLAN T2
DATED MAY 1, 2006 - PAGE 213 OF THE STANDARD PLANS BOOK DATED MAY 2006.

REVISED STANDARD PLAN RSP T2

2006 REVISED STANDARD PLAN RSP T2

5-15-08

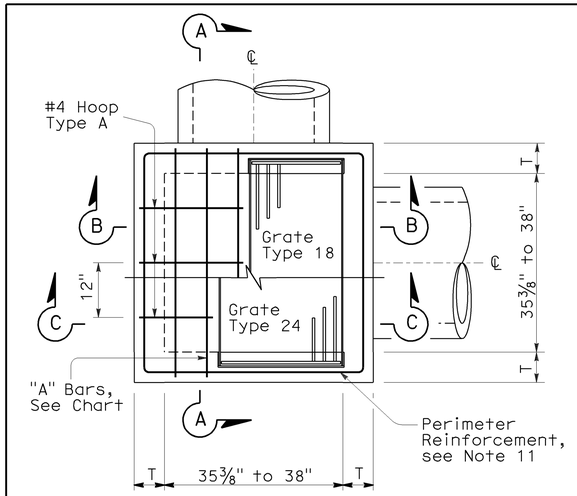

STANDARD TYPE G2 OR G4

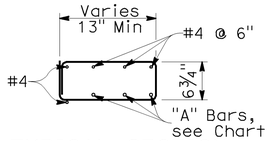

TYPICAL SECTION
(HOOP TYPE A)

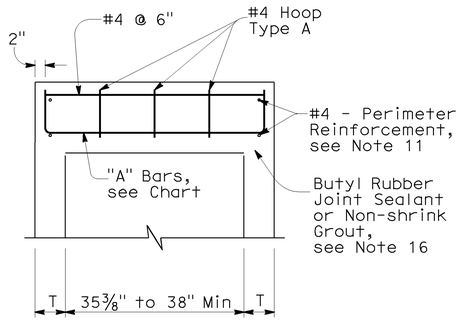

SECTION A-A

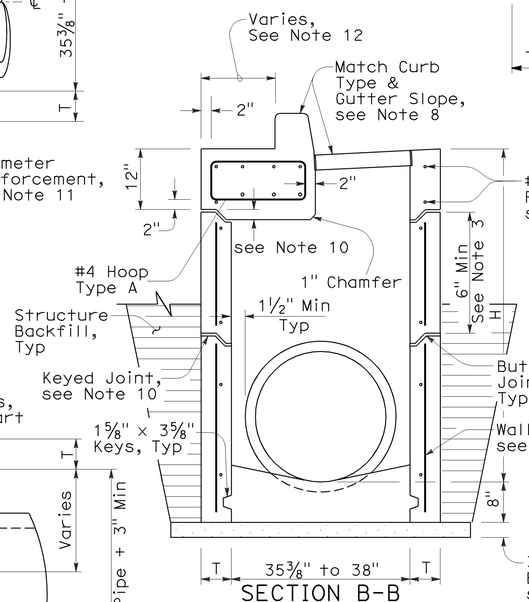

SECTION B-B
(with G4 Top)

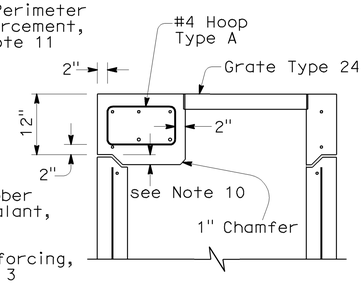

SECTION C-C
(with G2 Top)

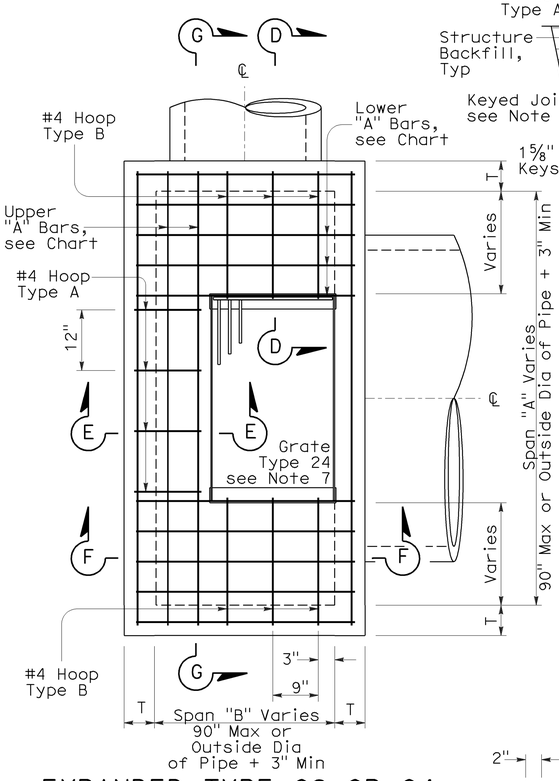

EXPANDED TYPE G2 OR G4
(Top Rebar Not Shown)

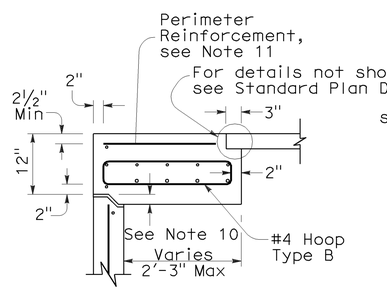

SECTION D-D

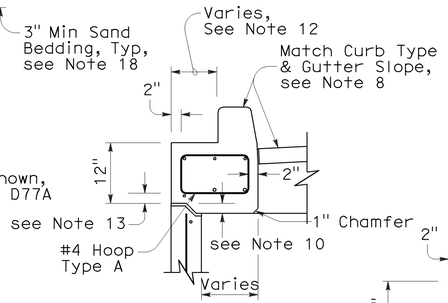

SECTION E-E
(with G4 Top)

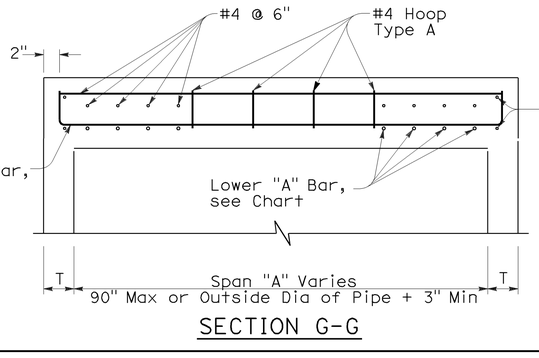

SECTION G-G

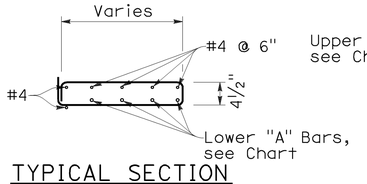

TYPICAL SECTION
(HOOP TYPE B)

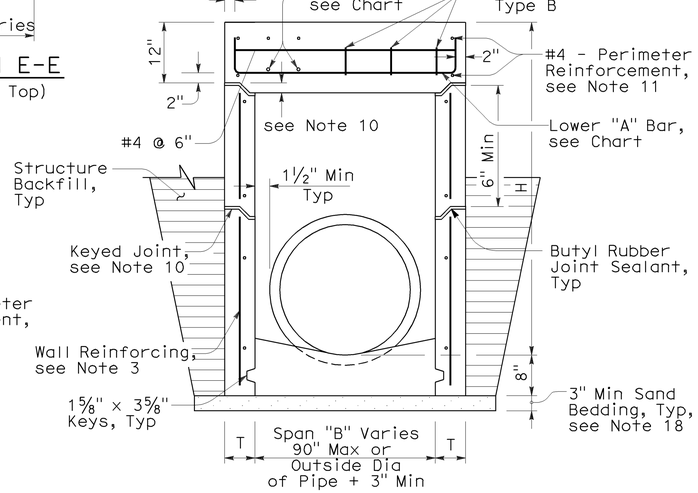

SECTION F-F
(with G2 Top)

NOTES:

To accompany plans dated 3-15-10

1. "H" is the difference in elevation between the outlet pipe flow line and the normal gutter grade line undepressed.
2. For "T" wall thickness: T=6" when "H" is 8' or less. T=8" when "H" is over 8'.
3. Wall reinforcing not required when "H" is 8' or less and the unsupported width or length is 6'-0" or less. Reinforce wall exceeding these limits with #4 bars @ 1'-6" ± centers placed 2" clear to the inside of inlet unless otherwise shown. Short independent wall sections or height adjustment rings 6" to 24" high must have a minimum of two #4 horizontal bars.
4. Seal pre-cast inlets connection openings between wall and pipe with non-shrink grout or resilient connectors as specified in the Special Provisions.
5. Steps - None required where "H" is less than 2'-6". Where "H" is 2'-6" or more, install steps with lowest rung 1'-0" above the floor and highest rung not more than 6" below bottom of lid. The distance between steps must not exceed 1'-0" and be uniform throughout the length of the wall. Place steps in the wall without an opening. Steps inserts may be substituted for the bar steps. Step inserts must comply with State Industrial Safety Requirements. See Standard Plan D74C for step details.
6. Pipe(s) can be placed in any wall.
7. Set inlet so that grate bars are parallel to direction of principal surface flow.
8. Type G4 inlet can use Grate Type 18 or 24. Type G2 inlet uses Grate Type 24. See Revised Standard Plan RSP D77A and Standard Plan D77B for grate and frame details and weights of miscellaneous Iron and Steel.
9. G4 inlet details are the same as the G2 with the addition of a curb and sloped grate that matches the adjacent curb and gutter depression. See Standard Plans D78A & D78B for gutter and inlet depresssion details. See Revised Standard Plan RSP A87A & Standard Plan A87B for Curb and Dike Details.
10. Provide pre-cast inlets with separate top sections for final grade adjustment under Standard Specifcation Section 51-1.02. Provide keyed joints between the top and wall and multiple wall sections. Joint design may vary but must be 1" to 3" in depth.
11. Perimeter reinforcement serves as a rigid frame to position and attach the required structural reinforcement and may be tack welded at outer corners when using ASTM A706 weldable bars.
12. This dimension will vary with different grates, curbs types, box width and wall thickness.
13. 2" unless inlet is expanded in the Span "A" direction, then clearance is 2" plus the diameter of the lower "A" bar.
14. Place "A" Bars at an angle so hooked ends will maintain 2" clear coverage.
15. Refer to Standard Plan D73, Table A for concrete quantities.
16. Non-shrink grout can be used for upper most joint to facilitate final top grade adjustment.
17. Slope inlet floors 4:1 towards the outlet pipe. Pre-cast inlets may have monolithic sloped floors, flat floors, or no floors in which case a sloped floor must be cast in the field. Inlet floors do not require reinforcing.
18. Extend sand bedding under all structure backfill.

DIST	COUNTY	ROUTE	POST MILES TOTAL PROJECT	SHEET NO.	TOTAL SHEETS
04	Son	1	16.1/19.7	23	26

REGISTERED CIVIL ENGINEER

June 5, 2009
PLANS APPROVAL DATE

Glenn DeCou
No. C34547
Exp. 9-30-09
CIVIL
REGISTERED PROFESSIONAL ENGINEER
STATE OF CALIFORNIA

The State of California or its officers or agents shall not be responsible for the accuracy or completeness of electronic copies of this plan sheet.

TOP REINFORCEMENT CHART		
16 Bar Diameters; "A" Bars; See Note 14; Varies		
Span	"A" Bars	Required steel area per foot (in^2/ft)
Under 38" with Type 24 Grate	#5 @ 7" C-C 2-#5 Min	0.525
Under 38" with Type 18 Grate	#5 @ 7" C-C 3-#5 Min	0.525
38"-60"	#5 @ 6" C-C	0.621
61"-72"	#5 @ 5" C-C	0.744
73"-90"	#6 @ 6" C-C	0.811

STATE OF CALIFORNIA
DEPARTMENT OF TRANSPORTATION

DRAINAGE INLETS (PRECAST)

NO SCALE

NSP D73A DATED JUNE 5, 2009 SUPPLEMENTS THE STANDARD PLANS BOOK DATED MAY 2006.

NEW STANDARD PLAN NSP D73A

2006 NEW STANDARD PLAN NSP D73A

3-16-09

DIST	COUNTY	ROUTE	POST MILES TOTAL PROJECT	SHEET NO.	TOTAL SHEETS
04	Son	1	16.1/19.7	24	26

Raymond Don Tsztoo
REGISTERED CIVIL ENGINEER

March 7, 2008
PLANS APPROVAL DATE

REGISTERED PROFESSIONAL ENGINEER
Raymond Don Tsztoo
No. C37332
Exp. 6-30-08
CIVIL
STATE OF CALIFORNIA

The State of California or its officers or agents shall not be responsible for the accuracy or completeness of electronic copies of this plan sheet.

To accompany plans dated 3-15-10

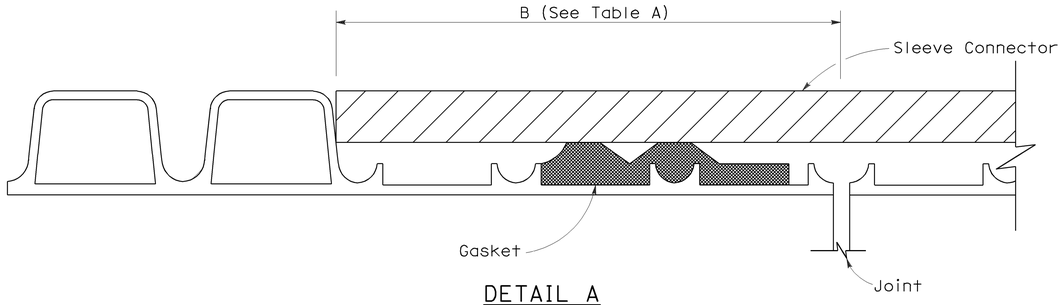

DETAIL A

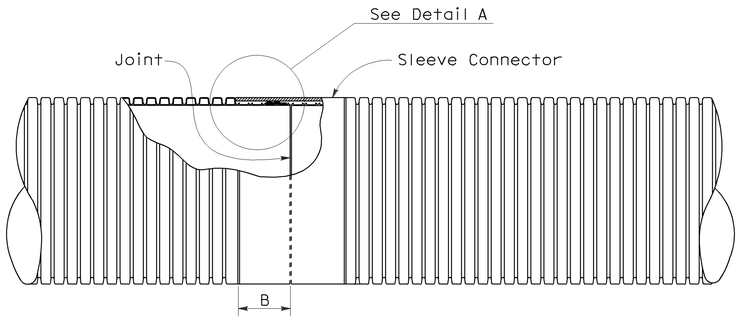

PLAN VIEW
Liner Insert
See Note 4

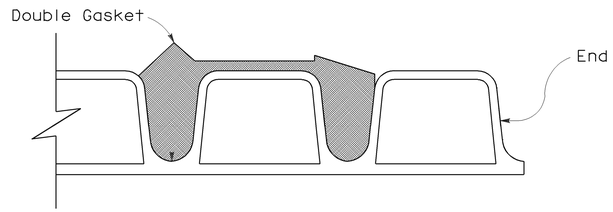

Double Gasket

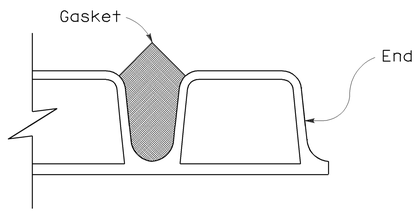

Single Gasket

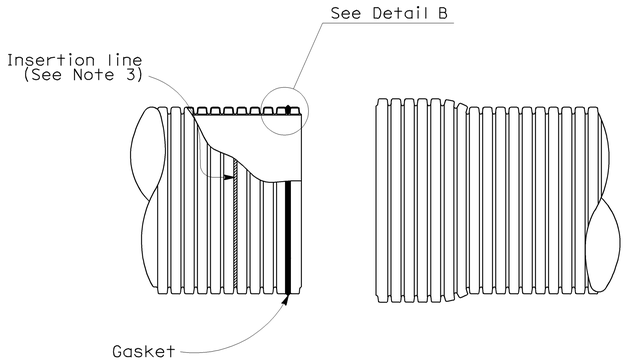

SPIGOT

BELL

DETAIL B

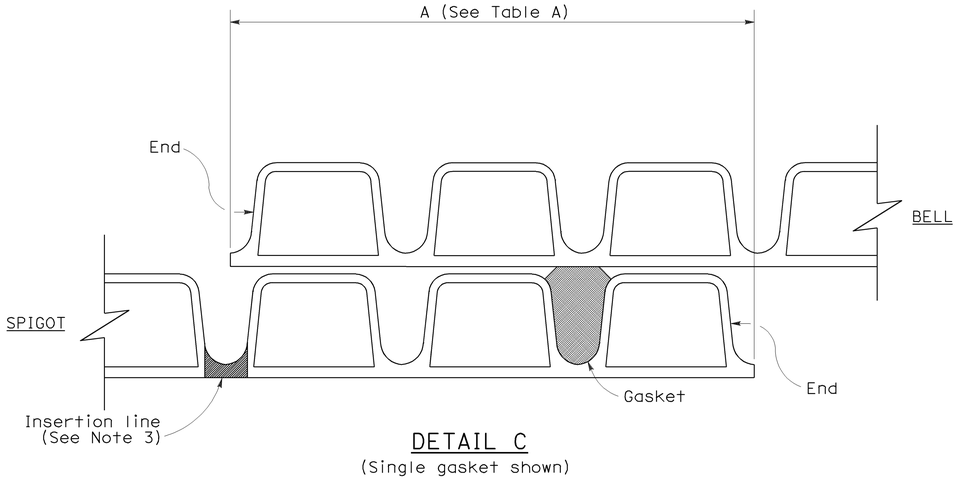

DETAIL C
(Single gasket shown)

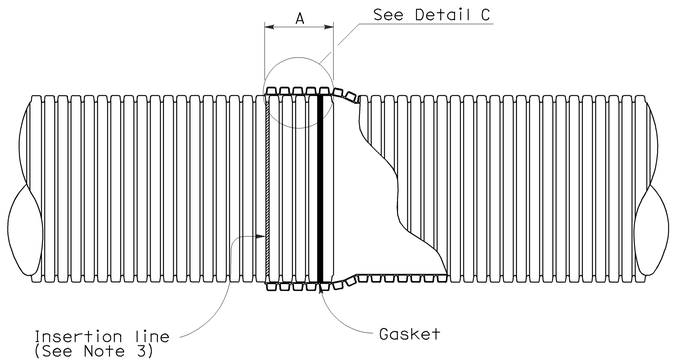

BELL AND SPIGOT JOINT

NOTES:

1. For pipe sections installed on straight alignment, the pipe sections shall be joined to achieve maxium joint overlap at all points on the periphery as indicated in Table A where the plans call for positive or watertight joints. Maxium joint overlap is recommended where the plans call for standard joints, but in no case shall the joint overlap be less than 3½".
2. For pipe sections installed on curved alignment, the maxium angle of deflection from straight alignment at any joint shall not exceed two degrees. Where the plans call for watertightness, field testing for compliance is required. Where plans call for positive joints, the pipe sections shall be joined to achieve Table A Dimensions on one side of the joint. Joints classified as standard shall have no less than 3½" joint overlap at any point on the periphery.
3. Factory applied insertion line limit shall be placed on spigot.
4. Liner insert to be used inside of existing pipe.

TABLE A

JOINT OVERLAP DIMENSIONS		
PIPE Dia (NOMINAL)	A	B
12"	5¾"	4¼"
15"	6¾"	5⅝"
18"	6¾"	5⅝"
21"	8½"	5⅝"
24"	8½"	6⅛"
30"	8½"	7⅛"
36"	8½"	8⅛"

STATE OF CALIFORNIA
DEPARTMENT OF TRANSPORTATION

CORRUGATED POLYVINYL CHLORIDE PIPE WITH SMOOTH INTERIOR STANDARD AND POSITIVE JOINTS

NO SCALE

NSP D97I DATED MARCH 7, 2008 SUPPLEMENTS THE STANDARD PLANS BOOK DATED MAY 2006.

NEW STANDARD PLAN NSP D97I

190A

2006 NEW STANDARD PLAN NSP D97I

2-13-08

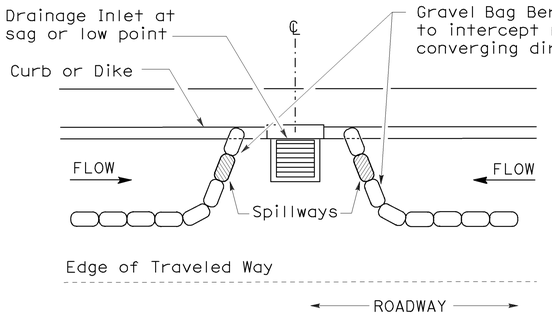

PLAN

CONFIGURATION FOR SAG POINT INLET (GRAVEL BAG BERM)

GRAVEL BAG BERM (TYPE 3A) SPACING TABLE

SLOPE OF ROADWAY (PERCENT)	1 to 3.9	4 to 5.9	6 to 7.9	8 to 10	10+
INTERVAL BETWEEN BERM	100′	75′	50′	25′	12′

For slope of less than 1%, install barriers only if erosion/sediment is prevalent

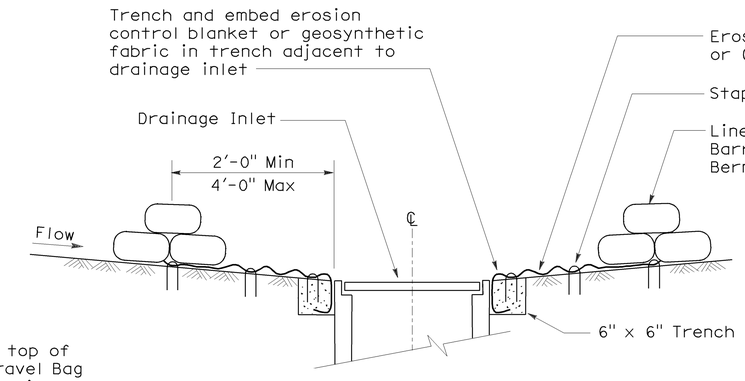

SECTION A-A

NOTES:

1. Place safety cones adjacent to drainage inlet protection.
2. Dimensions may vary to fit field conditions.
3. Install a minimum of 3 gravel bag berms upstream of each drainage inlet to be protected.
4. Position erosion control blanket or geosynthetic fabric at edge of concrete apron and secure in trench.
5. Erosion control blanket or geosynthetic fabric is not required if the area adjacent to the drainage inlet is vegetated or paved.

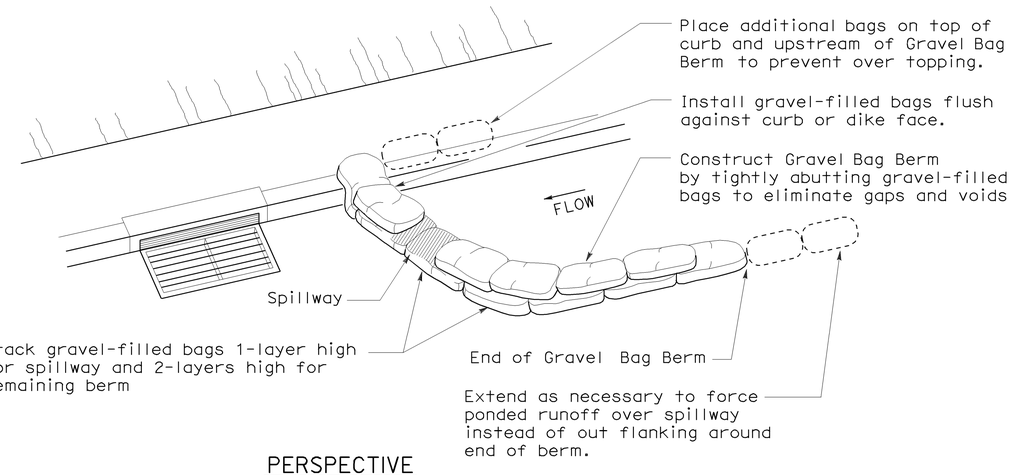

PERSPECTIVE

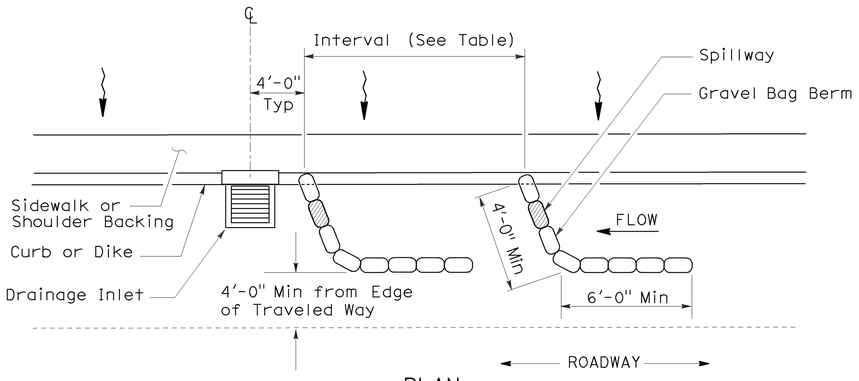

PLAN

TEMPORARY DRAINAGE INLET PROTECTION (TYPE 3A) (GRAVEL BAG BERM)

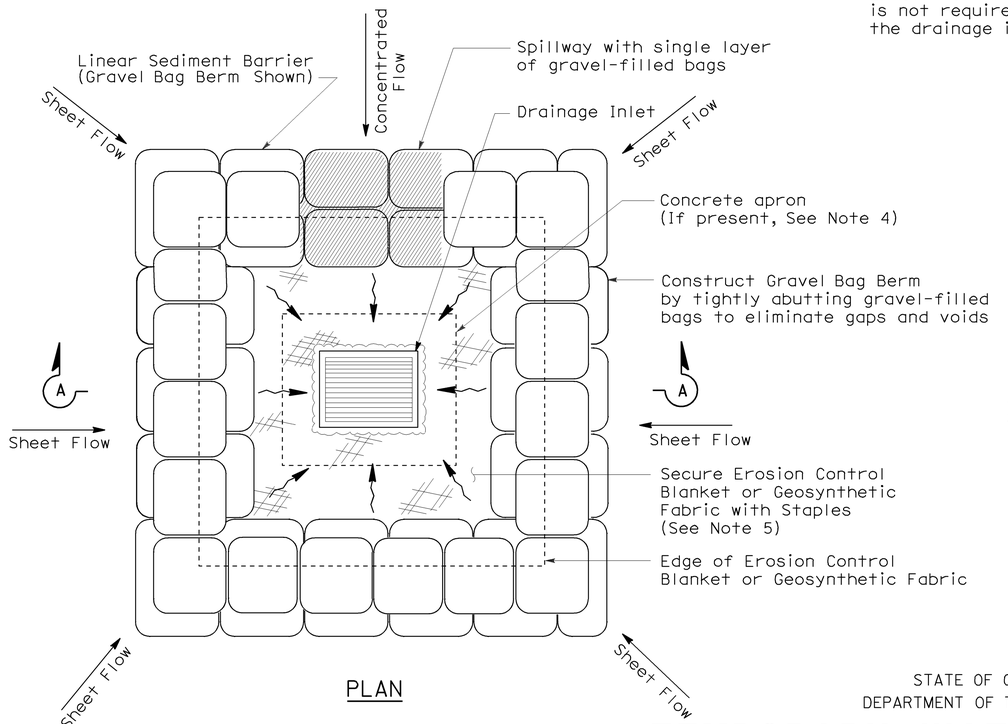

PLAN

TEMPORARY DRAINAGE INLET PROTECTION (TYPE 3B)

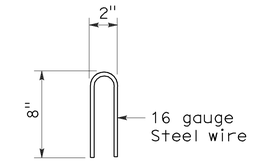

STAPLE DETAIL

DIST	COUNTY	ROUTE	POST MILES TOTAL PROJECT	SHEET NO.	TOTAL SHEETS
04	Son	1	16.1/19.7	25	26

Robert B Schott
LICENSED LANDSCAPE ARCHITECT

August 15, 2008
PLANS APPROVAL DATE

LICENSED LANDSCAPE ARCHITECT — Robert B. Schott 3825 — Signature — 11-04-08 Renewal Date — 08-11-08 Date — STATE OF CALIFORNIA

The State of California or its officers or agents shall not be responsible for the accuracy or completeness of electronic copies of this plan sheet.

To accompany plans dated 3-15-10

STATE OF CALIFORNIA
DEPARTMENT OF TRANSPORTATION

TEMPORARY WATER POLLUTION CONTROL DETAILS (TEMPORARY DRAINAGE INLET PROTECTION)

NO SCALE

NSP T62 DATED AUGUST 15, 2008 SUPPLEMENTS THE STANDARD PLANS BOOK DATED MAY 2006.

NEW STANDARD PLAN NSP T62

2006 NEW STANDARD PLAN NSP T62

7-11-08

DIST	COUNTY	ROUTE	POST MILES TOTAL PROJECT	SHEET NO.	TOTAL SHEETS
04	Son	1	16.1/19.7	26	26

Robert B Schott
LICENSED LANDSCAPE ARCHITECT

August 15, 2008
PLANS APPROVAL DATE

LICENSED LANDSCAPE ARCHITECT
Robert B. Schott 3825
Robert B Schott
Registration Date
11-04-08
Renewal Date
08-11-08
Date
STATE OF CALIFORNIA

The State of California or its officers or agents shall not be responsible for the accuracy or completeness of electronic copies of this plan sheet.

To accompany plans dated 3-15-10

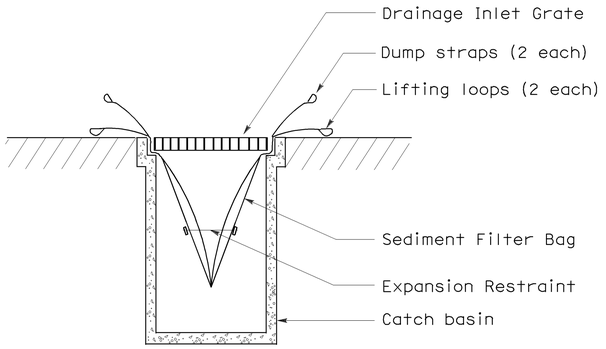

SECTION B-B

SEDIMENT FILTER BAG DETAIL

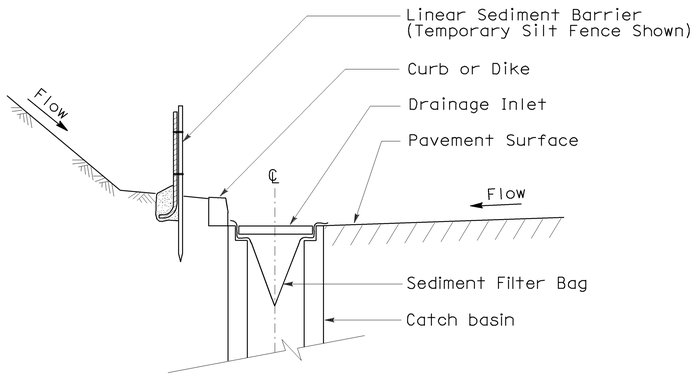

SECTION A-A

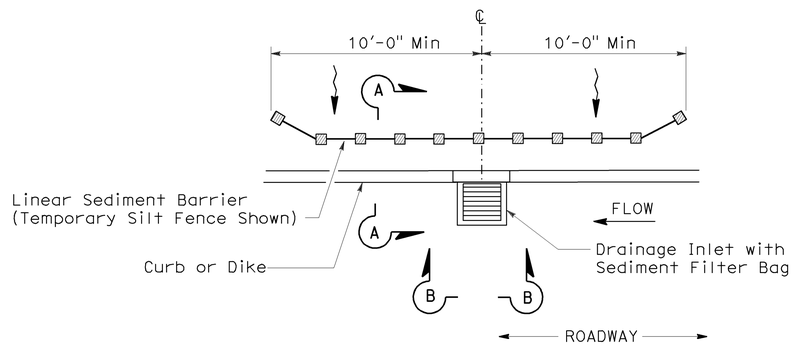

PLAN

TEMPORARY DRAINAGE INLET PROTECTION (TYPE 5) (SEDIMENT FILTER BAG)

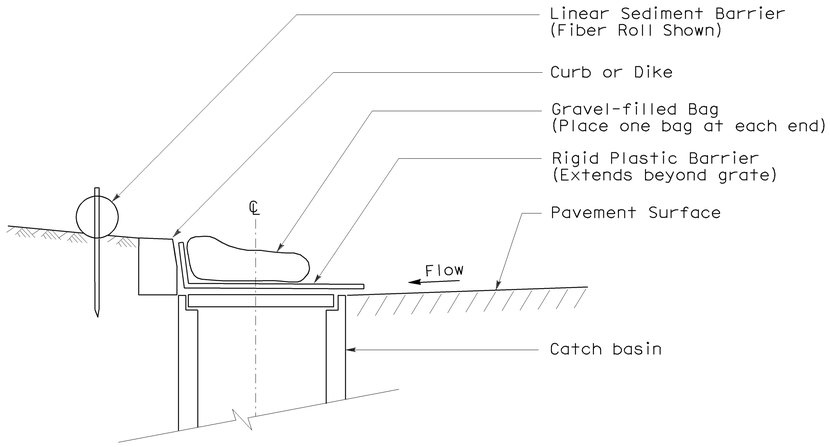

SECTION

TEMPORARY DRAINAGE INLET PROTECTION (TYPE 6A) (CATCH BASIN WITH GRATE)

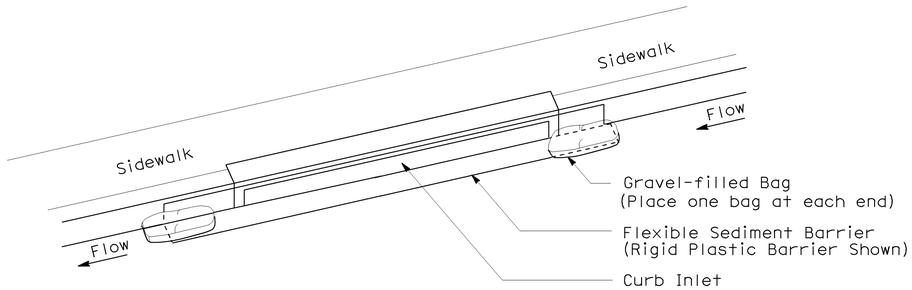

PERSPECTIVE

TEMPORARY DRAINAGE INLET PROTECTION (TYPE 6B) (CURB INLET WITHOUT GRATE)

NOTES:

1. See Standard Plan T51 for Temporary Silt Fence.
2. Dimensions may vary to fit field conditions.

STATE OF CALIFORNIA
DEPARTMENT OF TRANSPORTATION

TEMPORARY WATER POLLUTION CONTROL DETAILS (TEMPORARY DRAINAGE INLET PROTECTION)

NO SCALE

NSP T64 DATED AUGUST 15, 2008 SUPPLEMENTS THE STANDARD PLANS BOOK DATED MAY 2006.

NEW STANDARD PLAN NSP T64

2006 NEW STANDARD PLAN NSP T64

7-11-08